PN-AAQ-013
ISN = 34629

62.

A Winrock International
~~Draft Position Paper~~ FINAL REPORT

LIVESTOCK PROGRAM PRIORITIES AND STRATEGY
U.S. Agency for International Development

Prepared by

Winrock International Livestock Research
and Training Center
Morrilton, Arkansas 72110

January 4, 1982

FOREWORD

Winrock International and USAID share a special interest in the improvement of crop/livestock and grazing systems of developing countries. This position paper emphasizes the complex interactions of crop/livestock systems and their contributions to limited-resource family farms. It also provides the conceptual tools needed for a comprehensive understanding of these systems in widely varying social, economic, and ecological environments. A specific purpose is to address the technical assistance needs of livestock research, training, and development programs in 60 designated USAID host countries.

Perhaps most importantly for national program scientists and planners, the farming systems approach advocated in this paper provides a general strategy and criteria for setting research priorities in national agricultural programs. Emphasis is on field research and the field-level transfer of technology and feedback from producers.

As a component of global agricultural development strategy, this paper proposes systematic implementation of livestock technical assistance programs that link host country, regional, international, and U.S. institutions.

Prepared by: Ned S. Raun
Robert D. Hart
John De Boer
H. A. Fitzhugh
Kenneth Young

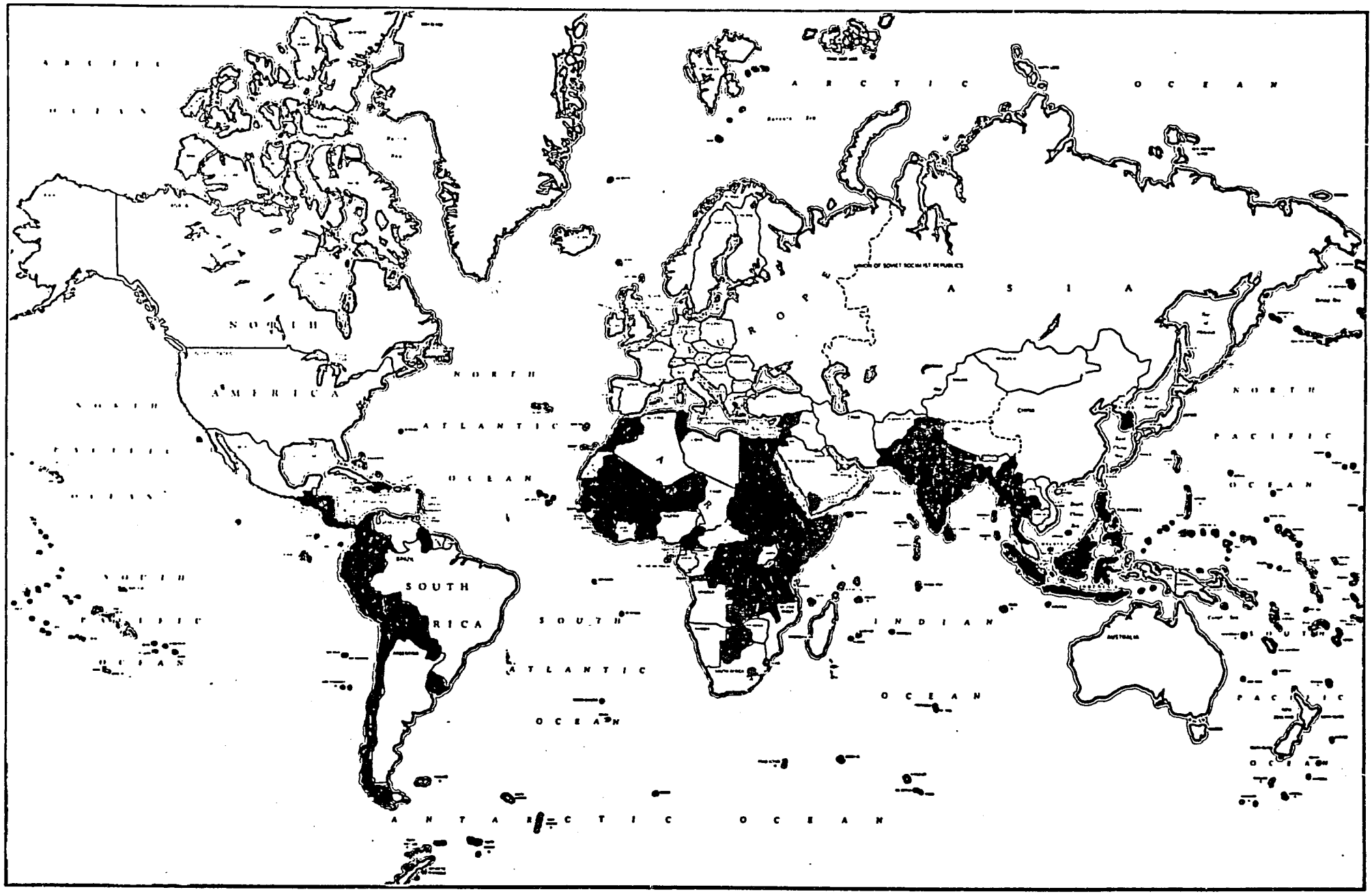

FIGURE 1: SIXTY USAID DESIGNATED COUNTRIES (SHADED AREAS).

ACKNOWLEDGEMENTS

The Science and Technology Bureau/Office of Agriculture of the U.S. Agency for International Development awarded Contract 53-319R-1-202 to Winrock International to cover partial costs of a draft position paper on "Livestock Program Priorities and Strategy." Winrock International places high priority on such planning and has provided the additional resources required for completion of this document. Winrock expresses special appreciation to the workshop participants who were asked to critique a preliminary draft of the paper in October 1981. Workshop participants included:

Larry Abel	Animal Scientist; Assistant Agricultural Development Officer, Office of Development Resource Bureau for Africa, USAID
James Bemis	Communications Specialist; Private Consultant
Douglas Butchart	Epidemiologist; Livestock Advisor, Office of Agriculture, Bureau for Science and Technology, USAID
Joe Conrad	Animal Scientist; Professor and Coordinator, Animal Science Programs, University of Florida
John De Boer	Agricultural Economist; Program Officer for Asia, Winrock International
Donald Ferguson	Agricultural Economist; Program Leader for African Programs, USDA/OICD
Hank A. Fitzhugh	Animal Scientist; Program Officer for Latin America, Winrock International
Charles Haines	Animal Scientist; Livestock Specialist, Office of Agriculture, Bureau for Science and Technology, USAID
Robert D. Hart	Agronomist; Winrock International
Peter Little	Economic Anthropologist; Research Associate, Institute for Development Anthropology

Andy Martinez	Animal Scientist, Winrock International
John A. Pino	Animal Scientist; Director Agricultural Sciences, Rockefeller Foundation
Ned S. Raun	Animal Scientist; Vice-President, Programs, Winrock International
LeRoy Rogers	Agricultural Economist
Paul Schumacher	Training Specialist, Winrock International
Howard Sprague	Plant Scientist; Private Consultant
Donald Sutherland	Animal Scientist; Livestock Development Advisor, Agriculture and Rural Development Department, IBRD
Phillip Warren	Animal Scientist; Assistant Agricultural Development Officer, Office of Development Resources, Bureau for Latin America and the Caribbean, USAID
Richard O. Wheeler	Agricultural Economist; President, Winrock International

Other Winrock Staff members contributed substantially to the preparation of this report, including Jim Bemis, who served as editor and workshop rapporteur; Essie Raun, editoral assistance; Shirley Zimmerman, Darlene Galloway and Tammy Chism, copy preparation.

Among the reports that proved especially useful in discussing livestock technical constraints, technical elements of a livestock improvement strategy, and implementation procedures were: The Role of Sheep and Goats in Agricultural Development (Winrock International 1976); Improving Ruminant Livestock Production on Small Holdings (Agricultural Development Council 1976); The Role of Animals in the World Food Situation (Rockefeller Foundation 1975); Forages, Ruminant Livestock and Food (Hodgson 1976); Ruminant Livestock Research and Development (Byerly 1977); Objectives and Constraints of Ruminant Livestock Production (Scoville and Sarhan 1978); and Integrated Crop and Animal Production (McDowell and Hildebrand 1980). General strategies and reviews that were useful for specific geographic regions were: A Conceptual Framework for the Evaluation of Livestock Production Development Projects and Programs in sub-Sahara West Africa (Ferguson and Sleeper 1975), Small Ruminant Production Systems in the Humid Tropics (ILCA 1979), and A Workshop on Pastoralism and African Livestock Development sponsored in 1979 by USAID and the Institute for Developmental Anthropology.

TABLE OF CONTENTS

	Page
FOREWORD	i
SUMMARY AND CONCLUSIONS	6
SECTION I: ANALYTICAL FRAMEWORK	6
OBJECTIVES AND PROCEDURES	6
ROLE OF LIVESTOCK IN REACHING SECTOR DEVELOPMENT GOALS	6
Background	6
Contributions to Well-being of Producers and Consumers	8
Human nutrition	8
Animal traction power	9
Food reserve	13
Cash reserve	13
Natural Resource Management	14
Grazing lands	14
Agroforestry	15
Soil conservation and fertility	17
National Economy	18
Gross domestic product from livestock	18
Meeting demand requirements	18
Export earnings	26
LIVESTOCK PRODUCTION SYSTEMS	27
Methodology	27
Basic Systems and Relative Importance	32
Animal based	32
Mixed crop and animal	34
Crop based	35
Limitations of systems methodology	35
CONSTRAINTS TO LIVESTOCK PRODUCTION SYSTEMS	35
Ecological	36
Biological	36
Livestock nutrition	36
Livestock health	37
Livestock genotype	37
Socioeconomic	38
Range/pasture management	38
Livestock management	39
Marketing and production economics	39
Cultural constraints	40
Livestock As Part of the Agricultural System	41

Page

SECTION II: RECOMMENDED PRIORITIES AND IMPLEMENTATION STRATEGY. 42

SCOPE AND PROCEDURES. 43

BASIC PR ORITIES FOR TECHNICAL ASSISTANCE 43

HIGHEST RECOMMENDED PRIORITIES. 44
- Producers. 44
- Ecosystem. 44
- Production Systems 44
- Species. 45
- Production Constraints 46
- Research Objectives 47
- Training 48
- Technology Delivery Systems. 49
- Marketing and Production Economics 50

STRATEGY RECOMMENDED FOR IMPLEMENTING PROGRAMS. 51
- Host Country Programs. 51
  - National program research and development 51
  - Basic methodology 53
  - Institutional requirements. 56
  - Bilateral development projects. 57
- Regional Programs. 58
- International Agricultural Research Centers. 59
- United States Institutions 61
  - Universities. 62
  - Federal institutions. 62
  - Private sector. 62

BIBLIOGRAPHY. 64

APPENDICES

I. Cattle, Sheep, Goat, Swine, and Buffalo Populations in the World
II. People and Land Use in AID Countries
III. Livestock Numbers in AID Countries
IV. Livestock Products in Relation to People in AID Countries
V. Imports and Exports of Livestock Production in AID Countries
VI. AID Livestock Projects

SUMMARY AND CONCLUSIONS

GENERAL CONCLUSIONS

The recommended farming system approach considers livestock as a component of larger agricultural systems (i.e., crop/livestock, grazing, and crop-based systems) and emphasizes the complementarity of livestock and crops. This method serves to both assess needs and potentials and to improve livestock production within these agricultural systems, and thereby strengthen USAID's programs to increase food production. The recommended priorities deal specifically with the allocation of resources for the implementation of action programs to protect and improve the natural resource base on which livestock depend and to increase the productivity of the livestock component of these agricultural systems. Host countries, regional institutions, international research centers, and the resources of U.S. institutions would be integrated within a global systems approach to optimize the contribution of livestock to agricultural development.

BACKGROUND AND RATIONALE

The importance of livestock products in nutritionally balanced human diets is well-documented; however, much less is known about the many other complementary roles (table 1) that link livestock within the global food-supply systems and in the growth and development of a national economy.

Table 1. Livestock Contributions to People

Food:	meat, milk, eggs
Fiber and Skins:	wool, hair, hides, and pelts
Traction:	power for crop production, irrigation pumping, threshing, and transport
Animal Wastes:	fertilizer, heating fuel, methane gas production, feed, construction material
Storage:	storage of food supply or capital and seasonal excess of feeds.
Weed Control:	biological control of brush, plants, and weeds along roadsides and waterways
Cultural:	security and self-esteem--revered symbols
Sports/Recreation:	competition, exhibition, hunting, and companion animals

In recent years, the world food system has been jolted by a series of events--dwindling fossil fuel supplies and skyrocketing fertilizer prices, droughts, trade imbalances, and rising food prices--plus the voracious demands of an ever-expanding population. Food demands in developing countries were projected to increase at rates well above production growth. As future food supplies seemed threatened, some scientists and policymakers cast an especially critical eye on livestock production.

Among the anxious questions being asked were: Will the world's economic growth support the projected increase in demand for food, especially animal products? Will animals continue to be a vital element of the food production continuum in developing countries? Will developing countries be able to provide the feed resources needed for livestock production?

There has been little hard data available for reply to these kinds of questions. Today the food/population balance remains precarious in such countries, while understanding of how to improve the balance remains at a relatively primitive level. This general deficiency is compounded by research findings indicating that the relative importance of many livestock products and services can vary widely, depending on ecological, cultural, social, and political conditions, as well as on basic development resources. Despite our poor understanding of these factors, one of the clearest findings signaled in this study is that animal and crop agriculture must share complementary roles in any well-balanced food production strategy.

SYSTEM DESCRIPTIONS

Three principal types of livestock production systems are described: (1) livestock based (pasture, range); (2) mixed crop and livestock; and (3) crop based. When the systems are ranked by total livestock numbers, animal products, and income generated in each system, the mixed crop and livestock systems are of greatest importance, followed by pasture-based systems. Ruminant species predominate in these two systems.

MAJOR PRODUCTION CONSTRAINTS

Principal constraints to livestock production are feed supply and year-round feeding systems, livestock management, control of disease and pests, germ plasm potential, production inputs, and marketing. Of these constraints, feed supply and feeding systems are the most pervasive and the most limiting. Human management skills are a principal factor affecting livestock production, and are particularly critical in range, pasture, and livestock management.

PRIORITIES AND IMPLEMENTATION OF TECHNICAL ASSISTANCE PROGRAMS

USAID should continue to assist in the development of the livestock sector in developing countries, with emphasis on ruminant livestock in mixed crop/livestock and pasture-based systems. Higher priority is suggested for mixed crop/livestock systems. The target population should be family-farm units in tropical and subtropical areas. Assistance should be provided in research, training, technology delivery, and livestock development projects.

An integrated country development approach is recommended that involves host country institutions, regional institutions, international agricultural research centers, and United States institutions in the public and private sectors. This strategy is based on the development of national planning, research, and development institutions that will provide the structure for sustained national agricultural development programs, and the continued training of personnel to staff these institutions and programs. The systems approach serves in evaluating needs and priorities, and in the design and implementation of program activities.

National programs should rigorously employ the farming system research (FSR) method, emphasizing the application and adaptation of livestock production technology. Particular emphasis should be placed on year-round feeding systems in both mixed crop/livestock and pasture-based systems, on improved livestock management and breeding systems with adapted breeds, on disease and pest control programs, and on farm management and marketing. The capacity of national planning offices should be strenghened for establishing policy and the planning of national livestock improvement programs.

Regional organizations should serve to network and coordinate the regional activities of common national interests, and in some instances to implement integrated research/development programs for participating countries. These organizations often serve in the interface between national programs and International Agricultural Research Centers (IARCs).

The primary role of the IARCs is to generate new technology that will alleviate constraints and develop potentials for major increases in agricultural productivity. Such technology is not available now nor likely to be developed within current national, regional, and other research programs. Thus, the IARCs should focus on high-level constraints/potentials such as: pasture management and improved pastures; immunological mechanisms and methods of control of trypanosomiasis and other hemoprotozoan diseases; incorporation of disease and pest resistance traits in susceptible animals; incorporation of desirable production traits in local stocks; integrated pest management programs (e.g., to control ticks and tsetse flies); and animal traction power. IARC research should be sharply focused on priority production problems/potentials.

United States institutions, both public and private, should continue to have a prime role in agricultural development with (1) academic institutions providing the technological and educational base and personnel to contribute to research and training programs in developing countries; (2) private foundations and public nonprofit organizations engaging in a wide range of research, training, and development programs; and (3) the private sector becoming increasingly involved in the implementation of joint ventures with developing countries.

The bibliography and appendices provide a base for more detailed analyses of livestock production systems in the 60 host countries.

SECTION I

ANALYTICAL FRAMEWORK

OBJECTIVES AND PROCEDURES

In drafting this position paper for USAID consideration, the principal objectives were to: outline an analytical process for developing a livestock technical assistance strategy; identify general priorities for technical assistance to improve the livestock sector; and recommend a general strategy for implementing technical assistance programs in livestock production. The paper's two major sections are keyed to its basic objectives:

> Section I provides the "Analytical Framework" which presents an analysis of the livestock sector in 60 developing countries, including the role of livestock in reaching sector development goals, description of the principal livestock production systems, and discussion of the constraints to livestock production.
>
> Based on this analysis, Section II: (1) specifies processes for identifying priorities, (2) lists priorities for technical assistance to improve the livestock sector, and 3) recommends a strategy for the implementation of technical assistance programs in livestock production in the USAID host countries.

ROLE OF LIVESTOCK IN REACHING SECTOR DEVELOPMENT GOALS

Background

Some of mankind's earliest strategies for harnessing the potential of animal agriculture were first etched on the walls of caves--a hunting man's plan for assuring his food supply. Although the methods are much changed in this position paper, our objectives are basically the same.

Today our human reliance on animal agriculture is often cited in research, folklore, and the practical world of the producer, but hard data are lacking on livestock production systems in many developing countries. In fact, the systems range from "hunter" cultures to the livestock "factories" of the developed world.

Meat, milk, and eggs remain animal agriculture's biggest contribution to people; they serve up large portions of our global human energy and protein needs. While the importance of these products in nutritionally balanced human diets is well-documented (Pino and Martinez 1981), much less is known about the many other complementary roles (table 1) that link livestock within the global food supply systems--particularly the role of livestock in the growth and development of a national economy.

For many developing countries, the food/population balance remains precarious--and our understanding of how to improve the balance remains at a relatively primitive level. This general lacking is compounded by

research findings indicating that the relative importance of many livestock products and services can vary widely, depending on ecological, cultural, social, and political conditions, as well as other fundamental development resources. Thus, for planners in the developing world, much of the currently available information on livestock systems may often be less useful than the pictographs of early man.

Even a cursory look at the available livestock system data in developing countries reveals its weaknesses as compared to crop production information. Perhaps the difficulty of gathering and assessing livestock data accounts for its relative sparseness and, too often, the subsequent exclusion of livestock from the development planning processes.

This information deficiency is especially critical because one of the clearest findings signaled in this study is that animal and crop agriculture must share complementary roles in any well-balanced food production strategy. Further documentation of this interdependence can perhaps help quieten the divisive voices often heard in recent years as the world food system was jolted by a series of events--dwindling fossil fuel supplies and skyrocketing fertilizer prices; droughts; demand-supply imbalances and rising food prices; and the voracious demands of an ever-expanding population. Food demands in developing countries were projected to increase at rates well above production growth. Among the anxious questions being asked were: Will the world's economic growth support the projected increase in demand for food, especially animal products? Will animals continue to be a vital element of the food production continuum in developing countries? Will developing countries be able to provide the feed resources needed for livestock production. As future food supplies seemed threatened, some scientists and policymakers forecast that the world food system could not sustain the "luxury" of livestock products. Influenced by the simplistic notion that much of the nutritive value of feeds consumed by livestock is lost when converted to animal food products, some groups predicted that the world could not long afford the luxury of livestock food products.

Fortunately, more experienced scientists were convinced that animal agriculture was a vital component of the food system, although it had received relatively little study as a component of that system. At the same time, there was evidence that producers were not using available research data to improve livestock production and management. It was equally clear that more effective delivery systems were needed for technology transfer at the field level.

Winrock's technical assistance approach and the study reported here have been strongly influenced by the need to narrow this knowledge/application gap and to answer the kinds of questions raised in the wake of the world food crisis in the mid-1970s. Substantial studies (see Bibliography) have now documented animal agriculture's worldwide importance and some of these contributions are listed next.

Contributions to Well-being of Producers and Consumers

Human nutrition. Most animal and plant products (cereals, pulses, vegetables, fruits, root crops) produced in developing countries are used for direct human consumption. Although related information is limited, it is assumed that only limited amounts of feed grains and oil seed meals are used for livestock feeding, and that most are used for human consumption. Therefore, production of animal and plant protein would generally reflect human consumption.

The analysis presented in table 2 is based on the production of digestible protein from animal and plant products that is retained in the body for maintenance and production. While comparisons are often made on a crude protein or digestible protein basis, the biological value of a protein as measured by absorbed protein retained for maintenance and production is the true measure of usable protein. The "digestible protein retained" as derived from animal products in developing countries ranges from 12 percent in the Far East to 35 percent in Latin America.

Table 2. Production of Digestible Protein Retained in Animal and Plant Products 1/

Developing Countries	Animal Products	Plant Products	Total	% Animal
		(thousand metric tons)		
Africa	564	2,708	3,272	17
Latin America	2,120	3,914	6,034	35
Near East	631	2,196	2,827	22
Far East	1,452	10,258	11,710	12
Total	4,767	19,076	23,843	20
China, North Korea North Vietnam	2,311	10,866	13,177	18

Source: Derived from data in the FAO Production Yearbook, 1974.

1/ Calculations were based on the following percentages of crude protein, digestibility of crude protein, digestible protein retained, respectively: meat (16.0, 89.0, 76.0); milk (3.1, 97.0, 90.0); eggs (13.0, 90.0, 100.0); cereals (8.1, 78.0, 58.0); pulses, nuts (25.0, 82.0, 75.0); vegetables, fruits, root crops (1.1, 59.0, 50.0).

The critical importance of protein quality from animal products is documented by Pino and Martinez (1981) who note that 1977 supplies of meat, milk, and eggs on a worldwide basis were sufficient to supply 80 percent and 96 percent, respectively, of the world's population requirements for protein and essential amino acids. This importance is also indicated by the amino acid score of a protein which compares the essential amino acid content of a protein with a reference pattern of amino acid requirements for humans. Hen eggs, beef, lamb, and fish contain all the essential amino acids in excess of the reference pattern, thus have amino acid scores of 100. A slight deficiency of sulfur containing amino acids in cow milk limits its score to 96, while poultry meat rates 99. Rarely do plant proteins score higher than 75, with most scoring between 50 and 65.

There is general agreement that animal products are desired by and readily become principal diet components for rural poor (and even urban poor) when animal products are easily available. Prime examples would be milk and meat produced by ruminants maintained under traditional low-input/low-cost production systems. Cow milk, in particular, is an almost perfect food. It contains all the essential amino acids (except sulphur-containing amino acids) at higher levels than those recommended by the FAO/WHO joint committee on energy and protein requirements. Milk will support human life in early childhood and serves as an ideal protein supplement to other foods, particularly cereal grains and tubers. Per capita milk production serves as an indicator of the potential contribution of milk to the protein nutrition of local populations. In developed countries, milk production alone could meet 93 percent of the protein requirements of the population, while only 15 percent of similar requirements could now be met by milk production in developing countries.

An excellent illustration of the impact that the introduction of milk cows can have on human protein supplies is given by McDowell (1974). A small maize farm of 2 hectares is assumed to yield about 61,000 megacalories (Mcal) of metabolizable energy (ME) consisting of 38,000 Mcal of grain and 23,500 Mcal of plant residue and stover. After preparing maize as food, man derives about 23,470 Mcal energy and 246 kg protein from the grain alone. If the grain from one hectare is consumed and grain and residue from the second hectare fed to cows, the total energy available as human food drops to 21,491 Mcal (8.4 percent less), but total protein available rises to 653 kg--an increase of 165 percent. A total of 530 kg of protein comes from milk, a better balanced protein than maize grain.

Animal traction power. Livestock have a proven ability to supply much of the traction and related power in many developing areas. FAO has estimated that 75% or more of farm traction power in Africa, Far East, Near East, and Latin America is provided by draft animals (table 3). Draft animals include oxen, buffalo, horses, mules, camels, and even other animals. Ruminants are often preferred due to their capability to utilize low-quality crop residues and their adaptability to varying and marginal planes of nutrition. Makhijani and Poole (1975)

Table 3. Animal and Tractor Power Used in Agriculture in Selected Regions and Countries

	Animal	10^3 Mcal [1/] Mechanical	Total	Animal (% Total)
Regions				
Africa	2,095	449	2,544	82
Far East [2/]	19,591	282	19,873	99
Near East	3,320	436	3,756	88
Latin America	6,731	2,289	9,020	75
Selected Countries				
Morocco	231	102	333	69
India	15,481	119	15,600	99
Japan	200	1,466	1,666	12
Turkey	1,480	192	1,672	88
Brazil	2,604	326	2,930	89
Spain	536	520	1,056	51
Greece	293	135	428	69
South Africa	24	535	559	4
Italy	800	1,557	2,357	34
Argentina	671	568	1,339	54
France	902	2,883	3,785	24
Germany (Fed. Rep.)	378	3,453	3,831	10
U.S.	28	21,238	21,266	<1

1/ Mechanical power expressed as animal power divided by five: animal power converted to Mcal equivalents.

2/ Excluding China.

Source: FAO, Smaller farm lands can yield more (World Food Problems No. 8, Rome, 1969).

This table was prepared by Dr. R. E. McDowell, and was included in his paper "Ruminant Products: More Than Meat and Milk." Winrock International, 1979.

estimate the use of noncommercial energy sources (wood, dung, crop residues) in the developing countries as being equivalent to the total crude oil production entering international trade, or about 30 million barrels per day in 1975.

All types of draft animals in the world may total about 280 to 300 million head, with a market value of $100 billion. They provide the equivalent of 150 million horsepower, the replacement of which, by mechanical sources, would cost nearly $250 billion (Ramaswamy 1981). Extensive usage of animals for draft power is likely to continue at current levels, or perhaps with some increase, due to high cost and lack of availability of fossil fuels, farm-produced crop residues used as "fuel" for draft animals, synergistic effects of animals and crops in small farm systems, plus other factors.

However, it is important to recognize that some very real problems hinder the full realization of draft animals as power sources for developing countries. Many of these problems are common to animal production in general but others are use-specific, including the high proportion of feed required for maintenance relative to actual power provided, timeliness of operations, and high labor inputs for animal maintenance.

The FAO, as part of its "Agriculture: 2000" project, has estimated agricultural input requirements needed to meet specific rates of increase in crop production. Their estimates indicate an increased share of power being provided by mechanical means but, given the large increase in total power needed, a substantial increase in numbers of draft animals is still required. Table 4 shows man-day equivalents of power requirements for 1980, as well as for the year 2000. Draft animal power inputs are calculated to rise by 0.8 percent per year. Table 5 gives the estimated increases in tractors and draft animals, again calculated by FAO and summarized by Ramaswamy (1981). This table indicates at least 20 million more draft animals will be needed in the 90 developing countries, with the biggest increase coming in the Far East. Such demand is expected despite substantial slaughterings of draft animal stocks already occurring in some countries as the demand for red meat outstrips the locally available supplies.

Where land is not a limiting factor and new areas await exploitation, draft animals enable farmers to sharply increase the size of their operations and boost food production and income as well. For example, in Bolivia, the farm family with only hand labor can operate no more than two or three hectares (Claxton, personal communication). However, with a pair of oxen or mules, the size of the operation can be expanded at least five times. All feed required for these draft animals can be farm-produced. In Asia, ruminants are frequently preferred for power, especially in paddy cultivation, because of their tolerance of mud (McDowell 1977). The energy flow is from the sun to plants to animals, with manure and traction power going back into the system. Thus, ruminant animals can materially reduce the critical external energy inputs required for crop/livestock farming systems and can contribute to development of new lands in the tropics.

Table 4. Power Requirements for Crop Production, Levels of Requirement [1/]

Region	Year 1980 Man Day Equivalent Requirements				Year 2000 Man Day Equivalent Requirements			
	Total	Labor	Draft Animals	Mechanical	Total	Labor	Draft Animals	Mechanical
	Billion Man Day Equivalent							
90 Developing Countries	82.6	55.1	20.8	6.7	128.4	80.5	23.8	24.1
Africa	12.0	10.1	1.5	0.4	20.7	17.0	2.0	1.7
Far East	51.9	34.1	16.1	1.7	76.0	50.1	18.9	7.0
Latin America	13.0	7.3	2.2	3.5	22.8	8.4	2.1	12.2
Near East	5.7	3.7	1.0	1.0	8.9	4.9	0.8	3.2
Low Income Countries	56.0	37.9	16.6	1.5	84.3	58.4	19.3	6.6

1/ Power requirements are set equal to power output in the calculations.

Source: Ramaswamy (1981), p. 26.

Table 5. Estimated Numbers of Draft Animals and Tractors, 1980-2000 (in millions of units)

Region	1980		1990		2000	
	Draft Animals	Tractors	Draft Animals	Tractors	Draft Animals	Tractors
90 Developing Countries	165	2.6	175	5.8	185	14.2
Africa	14	0.2	16	0.5	17	1.3
Far East	126	0.6	135	1.6	145	4.9
Latin America	17	1.3	17	2.9	16	6.2
Near East	7	0.5	7	0.9	6	1.8
Low Income Countries	130	0.5	140	1.3	150	4.4

Source: Ramaswamy (1981), p. 27.

Food reserve. The degree of vulnerability of a food-producing system to vagaries of climate usually dictates the amount of food reserves required for periods of shortages. Agricultural systems in the tropics have varying degrees of vulnerability, ranging from relatively low in high-rainfall areas to very high in semiarid and arid regions--particularly where food supplies and incomes are largely derived from crops.

Climate vulnerability in food systems can be offset by employing livestock as vital banks or "granaries" of food-producing capability during periods of shortages (Winrock International 1978). This reserve function is exemplified in the herds held by pastoralists in arid rangeland areas of Africa. Their cattle, sheep, and goats provide milk, meat, and blood for human consumption in periods of plenty, as well as during food shortages. Although animals may be subjected to severe nutritional stress during shortage periods, and large numbers may die, sufficient quantities remain to sustain the local populace and serve as herd foundation stocks.

Small ruminants (sheep and goats) offer another example of food reserves. Although overall productivity of small and large ruminants (cattle and buffalo) would generally be equivalent, the smaller size of sheep and goats is often a distinct advantage. They are self-propelled, self-preserved, conveniently sized packages of food that do not require fossil fuel or other external energy inputs for their production and maintenance--and they can easily be harvested as needed. Thus, these small ruminants provide a food reserve that is efficient and minimizes problems of waste and food preservation.

Surplus crops may also be sold to purchase milking animals which can then provide a regular supply of milk to the family as well as cash sales to purchase other goods. The Green Revolution areas of Northern India have witnessed substantial increases in dairy buffalo numbers as farmers have converted cash grain sales into buffalo to ensure a regular flow of milk products for the family and a regular flow of cash income (Brumby 1979).

Cash reserve. Just as domestic animals serve as living food reserves, they also are living banks of stored capital, providing financial reserves in periods of economic stress and a source of capital for financing on-farm agricultural investments.

One study conducted in the Near East showed farmers often keep their animals primarily to ensure a source of capital to resume farming in case adverse weather causes crop failure (McDowell 1977). In many countries in central Africa, tribal groups consider an increase in animal numbers as the best insurance against the uncertainty of rainfall and the destruction of crops by pests. Storage of large reserves of food is pointless in view of inadequate storage facilities. Thus, any surplus from harvests is converted into cattle that can serve as accumulated capital until needed.

The same rationale serves swine producers in many agricultural areas in Latin America. Swine are probably the most important scavenger species for transforming surplus and damaged feedstuffs (for which there is no effective market) into a living "piggy bank." In studies conducted by CIAT on the north coast of Colombia, swine are the traditional farm animals used as a quick source of cash in meeting family emergencies (CIAT 1973, 1974). Swine are a readily acceptable form of collateral for agricultural loans. They also function as a marketing vehicle for farm products that cannot be sold because of poor quality, distance to market, or low market value. For example, some 20 to 30 percent of cassava roots are too small to be marketed for human consumption, and 25 percent of the grain legumes are damaged but still suitable as feed for swine.

Other means of converting local surpluses of crops into cash reserves are found in remote areas where it is uneconomic to transport bulky, perishable crops to market. Surpluses are converted into live animals, preserved meat products, fibers, or milk products such as cheese or ghee, and these valuable products can be transported to market for cash sales.

Local processing of animal products also represents a source of cash income that can be generated during off-peak agricultural seasons. Fibers, animal hair, hides, pelts, bone, and horn are used to produce a variety of storable products that can be sold as needed.

Draft animals are often used to generate cash by hiring out for cultivation or threshing. Many societies use pack animals for similar purposes.

In areas where fuel and/or plant nutrients are in short supply, manure is often accumulated and sold when needed. The sale of fuel cakes or compost can overcome critical shortages of cash for small farmers or landless laborers.

Domestic animals play a major role in cushioning the food and cash-flow disruptions that occur regularly in developing tropical countries. The animals, of course, harvest and utilize pastures and forages in periods of abundance. But they also provide a "sink" for surplus and damaged grains, fruits, and vegetables that are not marketable, converting these surplus and scavenged feeds into living reserves that require no preservation, handling, or storage facilities. Thus, domestic animals represent a dynamic storehouse of food and capital in case of emergency (Raun 1981). The outlined uses of animals are not typically associated with large-scale commercial enterprises but are critical aspects for the small farmer or small herd/flock owner.

Natural Resource Management

Grazing lands. Most developing countries have large areas of agricultural land that are currently used only for grazing, and will likely continue to be so used due to climate, fertility, topography,

transportation, and market constraints for crop production. In other words, grazing is the only feasible use for large areas of agricultural land (Sprague 1981). In developing countries, percentage of grazing land ranges from 33 to 92 percent (table 6). Developed countries, have high percentages of agricultural land that is used/suitable only for grazing (e.g., United States and Canada--53 percent, USSR--61 percent). On a worldwide basis, the percentage is 64 percent. Even in regions devoted primarily to cropping, villages typically have areas of land that, for one reason or another, are regularly grazed. Over the past 30 years, the developing countries have witnessed the conversion of large areas of productive grazing land into marginal cropland. To counteract the undesirable ecological consequences of this trend, animals can contribute to the increased stability of these marginal cropping areas. In addition, by making the economic returns from the grazing lands more attractive, improved animal production systems can make it less economically attractive to convert these lands to cropland.

Agroforestry. As a result of rapid growth in human population and increased demands for food production, millions of hectares of the world's forest are cleared each year. For example, it is estimated that one forest type alone (tropical lowland evergreen) is being degraded at the rate of 250,000 square kilometers each year. At that rate the tropical forests will be completely destroyed in a few decades, with the extinction of an estimated million species of plants, animals, and microorganisms (Raven 1981). Although a fourth of the world's land area is still forested, much of the remaining forest is on sites of lower potential, due to limitations of soil fertility, climate, and/or topography.

A major challenge facing agricultural development is to identify production systems that will increase food production while maintaining the forest. There are many examples of such "agroforestry" system, but only in recent years has there been a serious effort to formally study and improve these systems (Chandler and Spurgeon 1979). One of the most promising approaches in agroforestry is that of producing livestock in the forest; recently there has been an increase in the literature related to various production systems for grazing livestock in forested areas. Such systems can be grouped into one of five categories (Byington and Child 1981):

- planting "fodder trees" to slow deforestation in the humid tropics and desertification in the arid tropics
- producing livestock forage under pine tree plantations
- integrating forage production with tree crops such as coconuts
- managing forests to increase off-take of wildlife being used for food

Table 6. Land Resource Use

	Total Agricultural Area ($x\ 10^6$ ha)	Agricultural Area Used for Grazing ($x\ 10^6$ ha)	Percent Used for Grazing
Africa*	1,003	792	78
Northwestern	380	258	68
Southern	461	424	92
Northeast	134	109	82
Asia*	1,009	532	52
Near East	169	125	74
S. West Asia	65	22	33
Southern Asia	194	15	81
East Asia	91	18	20
China & Mongolia	467	339	72
Latin America*	596	468	78
Central America	118	83	70
Northern S.A.	253	198	78
Southern S.A.	219	172	78
USA & Canada	503	269	53
USSR	607	375	61
Europe	231	87	38
World	3,951	2,526	64

Source: FAO, Production Yearbook Vol. 28.1 (1974).

* Africa, Asia, Latin America--Countries with small land areas are included as part of total for each area of the world.

- reducing livestock grazing damage on broadleaf forests while maintaining animal off-take

Although much more knowledge is needed to develop appropriate livestock production systems for many of the world's forest types, and such systems often require a high level of management, the potential benefits are substantial.

Soil conservation and fertility. Continuous high temperatures and high rainfall accentuate the weathering process and leaching of nutrients in soils of humid tropical regions. Fortunately, these degradatory processes are counteracted by forest vegetation and by legumes and grasses (Rockefeller Foundation 1975).

Deep-rooted tropical forage and shrub legumes significantly ameliorate soil-weathering processes and improve soil fertility (Sanchez 1981). The great value of leguminous plants in the savannah and forested areas stems from their ability to symbiotically fix atmospheric nitrogen in the soil. Their deep root systems bring soil nutrients to the surface, making them available for shallow-rooted grasses. The deep roots also hold the soil, reducing erosion problems. Leucaena is a leguminous shrub, now being widely studied, that offers high protein forage to correct the protein deficiency of pasture grasses, particularly during the dry season. It also produces timber for posts and building material. There are several genera of tropical forage legumes (e.g., Stylosanthes, Desmodium, and Pueraria) that can be successfully established with tropical grasses (CIAT 1980). These legume/grass mixtures markedly increase total forage and livestock production while at the same time improving soil fertility and reducing erosion. They also can be utilized at many stages in plantation systems where trees such as coconuts, rubber, oil palm, and tropical fruits can be produced in conjunction with cattle that serve to control understory and recycle nutrients as well as produce meat and milk.

The understory in the tropical forests, including leguminous tree crops and tropical forage legumes, has economic value only if harvested and transformed by ruminant animals into meat, milk, fiber, and/or traction power. Thus, ruminant herds are a primary incentive for establishing tropical legume/grass feed mixtures that protect the land, fix nitrogen, and generally enrich the soil.

Not to be overlooked is the value of animal manure that recycles back to the land a substantial proportion of the minerals in feeds consumed by livestock. In contrast, soil minerals that are translocated into grain and other crops are lost when they are harvested, sold, and removed from the farm. In effect, minerals going into crops are "mined" from the soil. In many intensive farming areas, manure produced from adjacent grazing areas is used on high-value crops, thus increasing the net nutrient supplied to crops.

Ruminant livestock thus play a vital role in indirectly counteracting two of the most serious problems in the tropical environment--declining soil fertility and soil erosion.

National Economy

Gross domestic product (GDP) from livestock. Livestock provide a significant proportion of the GDP produced in the agricultural sector in developing countries. Although reliable data are not available from many countries, data cited in table 7 seem fairly representative.

For instance, these data indicate that livestock products provide approximately 30 percent of the GDP in agriculture in Latin America, 21 percent in Africa, and 23 percent in the Middle East.

The percentage of total food accounted for by livestock products is somewhat greater than the livestock percentage of total agricultural products, due to nonfood crops being included in total agricultural products. In most developed countries, livestock account for a larger share of the GDP in the agricultural sector than in developing countries, averaging about 59 percent in Australia, 51 percent in the United States, and 40 percent in the USSR. This is a result of a very high correlation between consumption of livestock products and per capita levels of income (Haseyama 1976). The same pattern is evident on the production side. Chang (1981) presents data on Taiwan, a country experiencing rapid economic growth during the last 30 years. Over the 1952-1956 period, the percentages of total value of agricultural output contributed by crops, fisheries, and livestock, respectively, were 66.5, 9.1, and 18.0. By the 1977-1979 period, these respective proportions were 47.6, 20.1, and 29.5 percent. Given the pervasive nature of these trends in food preferences, we next examine how to meet the increased demand for animal products which accompanies economic growth.

Meeting demand requirements. Cereals have been the traditional staple in the diet of most developing countries. Prior to World War II, developing countries as a group were net exporters of cereals, but they have subsequently become net importers. As a result of rising income levels, the demand for livestock products is projected to increase more rapidly than for cereals, starchy roots, and sugar. Increased annual rates of growth of 3.3 percent for cereals and 4.4 percent for meat have been projected by the UN for developing market countries (1974 United Nations World Food Conference). Overall food demand is projected to be increasing faster than domestic food production in most of the designated developing countries receiving foreign aid (table 8).

Projected differences in the growth rate of domestic food production (column 2) and domestic food demand (column 3) indicate increasing deficits for the Near East, all Caribbean countries in the Latin America Group, and all countries in the Asia Group, with the exception of Thailand, Sri Lanka and Republic of Korea. Increasing food shortages are also projected by the UN for many designated LDCs in the rest of the

Table 7. Contribution of Livestock to GDP from Agriculture

	% of Total Agriculture Accounted for by Livestock	% of Total Food Accounted for by Livestock
AFRICA	21	23
Northwestern Africa	13	14
Algeria	30	30
Benin	1	1
Cameroon	7	9
Ghana	5	5
Guinea	11	11
Liberia	3	5
Morocco	28	28
Nigeria	10	10
Senegal	12	12
Sierra Leone	2	2
Tunisia	32	33
Upper Volta	15	16
Northeastern Africa	28	33
Egypt	20	25
Ethiopia	43	47
Sudan	27	34
Southern Africa	26	31
Angola	16	24
Burundi	4	4
Kenya	24	36
Malagasy Republic	25	29
Zimbabwe	27	36
Rwanda	4	4
South Africa	35	38
Tanzania	18	23
Uganda	24	32
ASIA		
Near & Middle East	23	26
Iraq	65	68
Israel	40	44
Syria	2	3
Turkey	17	19
Greece	27	33
Southwest Asia		
Iran	35	38
Southern Asia		
Sri Lanka	2	5
East Asia		
Malaysia West	1	1
Philippines	18	18
Northern Asia		
Japan	15	16
Korea	5	5
Latin America	30	35
Central America	25	30
Costa Rica	20	27
Dom. Rep.	27	30
El Salvador	17	32
Guatemala	17	27
Haiti	18	25
Honduras	24	31
Jamaica	24	25
Mexico	27	30
Nicaragua	23	38
Panama	21	22
Northern South America	29	34
Bolivia	31	33
Brazil	30	35
Colombia	25	33
Ecuador	14	15
Guyana	6	6
Peru	14	17
Venezuela	54	54
Southern South America	40	45
Argentina	37	41
Chile	52	54
Paraguay	28	33
Uruguay	69	85
North America		
Canada	35	36
United States	51	-
Oceania		
Australia	59	82
Europe	47	47
Eastern	37	37
Western	54	54
Russia	40	43
World	39	41

Sources: USDA-ERS, 1976 Indices of Agricultural Production in Africa and Near East, Western Hemisphere excluding the United States and Cuba, the Far East and Oceania.
USDA-ERS, 1976 Agricultural Outlook AO-17.

Table 8a. Projected Population Growth, Food Supply, and Food Demand in Designated LDCs in Latin America

	Population	Food Production[1]	Food Demand[2/3]	Food Energy Supply[3/4]		Protein Supply[3/4]
	Percent Growth Rate/Year[5]			Kilocal/Caput/Day	Percent of[6] Requirements	Grams/Caput/Day
	(1)	(2)	(3)	(4)	(5)	(6)
Bolivia	2.3	5.0	2.7	1,900	79	46
Chile	2.5	2.2	3.3	2,670	109	77
Colombia	3.3	3.1	3.9	2,200	95	51
Costa Rica	3.8	5.4	4.8	2,610	116	66
Dominican Republic	3.3	2.2	3.6	2,120	94	48
Ecuador	3.3	5.4	4.0	2,010	88	47
El Salvador	3.0	3.6	4.1	1,930	84	52
Guatemala	3.0	4.1	4.2	2,130	97	59
Guyana	3.0	2.5	3.6	2,390	105	58
Haiti	2.3	1.0	2.2	1,730	77	39
Honduras	3.3	4.0	4.2	2,140	94	56
Jamaica	1.9	1.9	3.3	2,600	105	63
Nicaragua	3.0	4.9	3.9	2,450	109	71
Panama	3.2	4.3	4.8	2,580	112	71
Paraguay	3.1	2.6	3.4	2,740	119	73
Peru	2.9	2.9	3.9	2,320	99	60

Source: FAO/UN. 1974. Assessment of the world food situation present and future. United Nations World Food Conference, Rome.

1/ Food Component of Crop and Livestock Production.
2/ Based on FAO Commodity Projections 1970-1980.
3/ Total Food.
4/ 1969-71 Average.
5/ Exponential Trend 1952-72.
6/ Physiological Requirement Plus 10 Percent Waste At Household Level.
7/ 1962-72.

Table 8b. Projected Population Growth, Food Supply, and Food Demand in Designated LDCs in Near East and Asia

	Population	Food Production[1]	Food Demand[2/3]	Food Energy Supply[3/4]		Protein Supply[3/4]
	Percent Growth Rate/Year[5]			Kilocal/Caput/Day	Percent of[6] Requirements	Grams/Caput/Day
	(1)	(2)	(3)	(4)	(5)	(6)
Botswana	2.0	2.3	0.0	2,040	87	65
Cameroon	1.8	3.3	2.5	2,410	104	64
Ethiopia	1.8	2.3	3.0	2,160	93	72
Ghana	2.9	3.9	3.2	2,320	101	49
Kenya	3.0	2.6	4.7	2,360	102	67
Lesotho	1.6	0.5	--	--	--	--
Liberia	1.5	1.1	1.8	2,170	94	39
Mali	2.1	1.6	4.3	2,060	88	64
Mauritania	2.0	2.4	3.0	1,970	85	68
Niger	2.8	4.1	2.2	2,080	89	74
Senegal	2.2	3.3	1.2	2,370	100	74
Somalia	2.2	1.1	1.5	1,830	79	56
Sudan	2.9	4.3	3.9	2,160	92	63
Swaziland	--	--	--	--	--	--
Tanzania	2.4	3.1	3.0	2,260	98	63
Upper Volta	1.8	4.7	1.2	1,710	72	59
Zaire	2.0	0.2	2.3	2,060	93	33
Benin	--	--	--	--	--	--
Burundi	2.0	2.4	2.4	2,040	88	62
Gambia	1.8	4.4	0.0	2,490	104	64
Guinea	2.0	2.0	3.4	2,020	88	45
Malawi	2.5	4.7	3.7	2,210	95	63
Rwanda	2.6	1.8	1.9	1,960	84	58
Sierra Leone	2.0	2.4	3.9	2,280	99	51
Togo	2.3	5.4	2.4	2,330	101	56
Zambia	2.9	4.3	4.8	2,590	112	68

Source: FAO/UN. 1974. Assessment of the world food situation present and future. United Nations World Food Conference, Rome.

1/ Food Component of Crop and Livestock Production.
2/ Based on FAO Commodity Projections 1970-1980.
3/ Total Food.
4/ 1969-71 Average.
5/ Exponential Trend 1952-72.

Table 8c. Projected Population Growth, Food Supply, and Food Demand in Designated LDCs in Near East and Asia

	Population	Food Production[1/]	Food Demand[2/3/]	Food Energy Supply[3/4/]		Protein Supply[3/4/]
	Percent Growth Rate/Year[5/]			Kilocal/Caput/Day	Percent of[6/] Requirements	Grams/Caput/Day
	(1)	(2)	(3)	(4)	(5)	(6)
Egypt	2.6	3.4	3.8	2,500	100	69
Jordan	3.2	1.8	6.6	2,430	99	65
Lebanon	2.8	5.0	3.1	2,280	92	63
Morocco	3.0	2.8	3.3	2,220	92	62
Syria	3.0	1.8	4.6	2,650	107	75
Tunisia	2.9	0.8	4.3	2,250	94	67
N. Yemen (AR)	2.4	-0.2	3.9	2,040	84	61
(DR)	2.4	1.6	-1.0	2,070	86	57
Bangladesh	3.5[7/]	1.6[7/]	--	1,840	80	40
Burma	2.2	2.4	3.3	2,210	102	50
India	2.1	2.4	3.0	2,070	94	52
Indonesia	2.5	2.0	2.6	1,790	83	38
Korea Rep.	2.7	4.8	4.7	2,520	107	68
Nepal	1.8	0.1	2.1	2,080	95	49
Pakistan	3.0	3.0	4.2	2,160	93	56
Philippines	3.2	3.2	4.2	1,940	86	47
Sri Lanka	2.5	3.6	3.1	2,170	98	48
Thailand	3.1	5.3	4.6	2,560	115	56

Source: FAO/UN. 1974. Assessment of the world food situation present and future. United Nations World Food Conference, Rome.

1/ Food Component of Crop and Livestock Production.
2/ Based on FAO Commodity Projections 1970-1980.
3/ Total Food.
4/ 1969-71 Average.
5/ Exponential Trend 1952-72.
6/ Physiological Requirement Plus 10 Percent Waste At Household Level.

Latin America Group and in the Africa Group. Deficits are projected to increase in Chile, Colombia, El Salvador, Guyana, Paraguay, Peru, and Uruguay in the Latin America Group (table 8), and in Ethiopia, Kenya, Liberia, Mali, Mauritania, Somalia, Zaire, Guinea, Rwanda, Sierra Leone and Zambia in the Africa Group.

Although large increases in the demand for livestock products are incorporated in these UN projections, the average composition of food items in the diet will still remain inferior relative to that in developed countries: 73 percent of calorie intake derived from cereals, starchy roots, and sugar compared with only 47 percent in developed countries. The protein supply in most LDCs contains a much higher percentage of vegetable protein, with less complete amino acid content, than that in developed countries. In 1977, on an average daily per capita basis, the developing countries consumed only one-seventh as much meat as developed countries: 30.6 grams versus 207.7 grams.

Increases in total consumption of different meat products between 1967 and 1977 are shown in figure 2 for developed, centrally planned, and developing economies. Except for pork, the developing countries as a group had the largest overall increase in total consumption of meat products. Increases in poultry meat consumption accounted for most of the increase in total consumption. Annual per capita poultry meat consumption increased 108 percent between 1967 and 1977 in developing countries. Projections by the UN and other sources indicate that consumption will continue to increase; however, the trend has slowed recently due to mounting balance-of-payment problems, increased outlays for oil imports, and shortages of foreign exchange. The financial strain is most prevalent in African countries as world market prices for their primary products have not kept pace with increasing costs of oil imports and manufactured products. Most of the poorest countries of the world are located in Africa and South Asia.

Regions differ notably in their potential to become more self-sufficient in food production. Economic indicators shown in table 9 include data on the population growth rate, the total agricultural product import ratio, the ratio of cereal imports to cereal consumption, the amount of cropped land per person, and fertilizer use per hectare reflecting the level of intensity of crop production.

Most of the African countries have sufficient land resources to become self-sufficient in food production but they have not been successful in expanding output to keep pace with the high rate of population growth over the past decade. Population has increased at twice the rate of increase in food production over the past five years in most African countries (FAO). The poor level of performance in food production has been attributed to a number of factors including lack of research data on local crop production, poor management skills of farmers, insufficient government support for food crop production, minimal use of inputs in production such as irrigation and fertilizer inputs, and inadequate price incentive for food crop production. Although the land resources

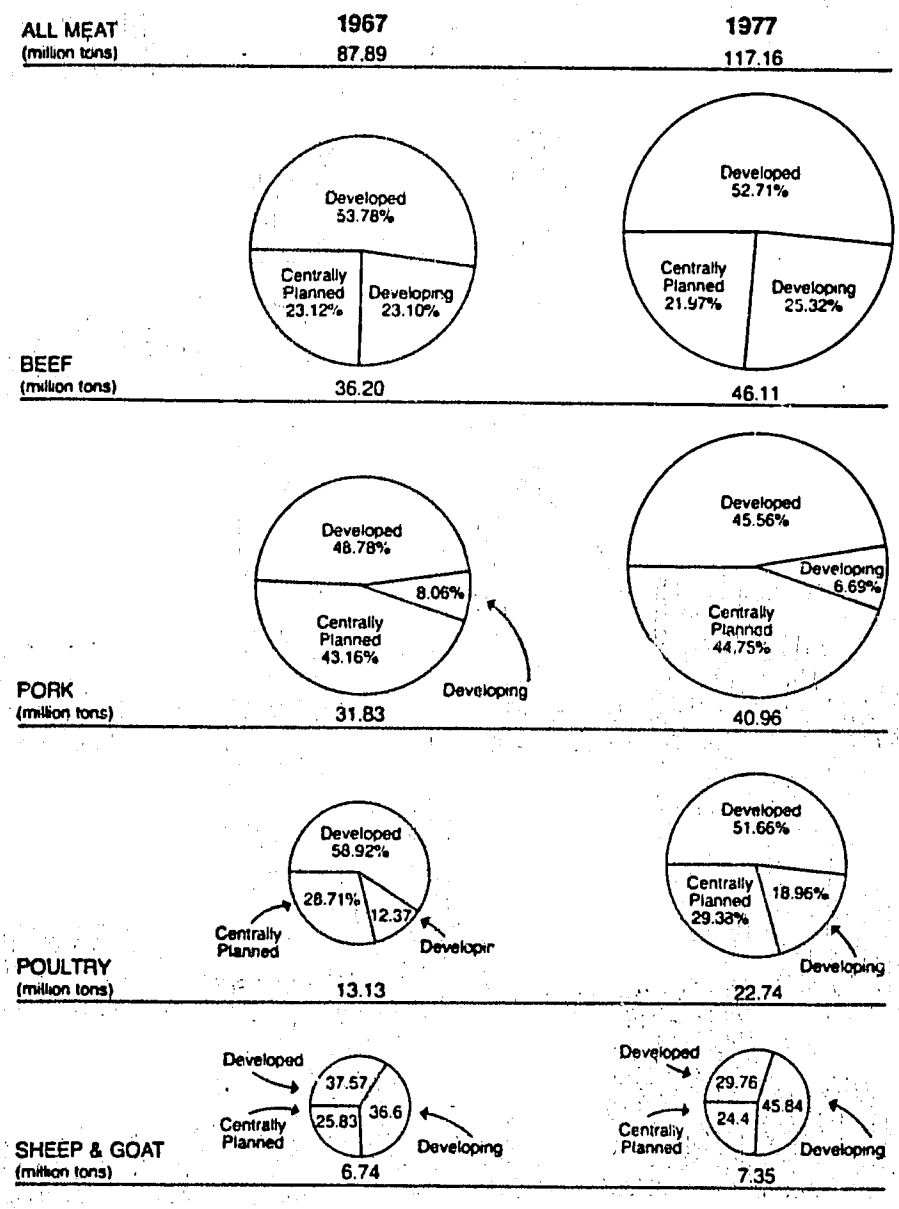

Figure 2. World Meat Consumption, by Socioeconomic Group, 1967-1977.

Table 9. Economic Indicators for AID Recipient Countries*

Region/Country	Population Growth Rate (%)	Agricultural Import Ratio (1977-79) Total	Cereals	Cropped Land Per Person (ha)	Fertilizer Use Kg/ha
AFRICA:					
Botswana	3.4	--1/	36	1.9	2
Cameroon	3.4	11	12	0.9	5
Ethiopia	2.5	13	3	0.5	2
Ghana	3.1	13	27	0.2	7
Kenya	3.9	10	n3/	0.2	23
Lesotho	2.4	--1/	21	0.2	14
Liberia	3.2	16	23	0.2	11
Mali	2.7	26	3	0.3	8
Mauritania	2.8	52	82	0.1	10
Niger	2.9	--1/	2	0.6	1
Senegal	2.6	35	36	0.4	13
Somalia	2.8	85	35	0.3	4
Sudan	3.1	30	6	0.4	2
Swaziland	2.8	--1/	16	0.3	39
Tanzania	3.1	16	3	0.3	39
Upper Volta	2.6	104	5	0.9	2
Zaire	2.8	13	34	0.2	2
Benin	3.0	236	12	0.2	5
Burundi	2.7	19	5	0.3	[illegible]
Gambia	2.4	51	40	0.4	16
Guinea	2.5	--1/	10	0.9	n3/
Malawi	3.2	9	1	0.4	11
Rwanda	3.0	22	5	0.2	n3/
Sierra Leone	2.6	35	7	0.2	6
Togo	3.0	24	10	0.6	1
Zambia	3.2	5	12	0.9	14
Median for Region	2.7	22	16	0.4	6
LATIN AMERICA:					
Bolivia	2.5	12	32	0.7	1
Chile	1.4	17	35	0.5	22
Colombia	2.1	10	16	0.2	49
Costa Rica	2.7	11	16	0.2	163
Dominican Rep.	2.8	19	41	0.2	51
Ecuador	3.1	7	32	0.3	27
El Salvador	3.3	11	16	0.2	164
Guatemala	13.1	8	15	0.3	55
Guyana	2.1	20	E2/	0.5	45
Haiti	2.6	52	23	0.2	4
Honduras	3.5	17	18	0.6	13
Jamaica	2.2	24	96	0.1	90
Nicaragua	3.4	9	17	0.6	32
Panama	2.2	30	19	0.3	41
Paraguay	3.1	34	9	0.4	2
Peru	2.8	12	41	0.2	37
Uruguay	1.1	10	E2/	0.7	30
Median for Region	2.2	12	23	0.2	52
NEAR EAST:					
Egypt	2.7	97	40	0.1	20.5
Jordan	3.3	107	90	0.5	6
Lebanon	2.5	--1/	91	0.1	91
Morocco	3.0	44	29	0.4	24
Syria	3.2	32	19	0.7	18
Tunisia	2.5	26	53	0.7	13
N. Yemen (AR)	2.3	--1/	30	0.3	4
ASIA:					
Bangladesh	2.6	57	6	0.1	41
Burma	2.4	9	E2/	0.3	9
India	1.9	20	E2/	0.3	27
Indonesia	2.0	10	9	0.1	45
Korea Rep.	1.6	17	30	0.1	392
Nepal	2.4	--1/	E2/	0.2	10
Pakistan	2.8	40	2	0.3	44
Philippines	2.4	11	7	0.2	39
Sri Lanka	2.2	34	39	0.2	63
Thailand	2.3	9	E2/	0.4	17
Median for Region	2.5	16	30	0.2	27

*Source: International Agricultural Development Service (IADS). Agricultural Development Indicators 1981

Indicators defined: Total Agricultural Import Ratio--The ratio of agricultural imports (which includes nonedible commodities and feedstuffs) to total exports is expressed as a percentage, for 1977-79. Data on imports is taken from the FAO Trade Yearbook and data on total exports from the UN Monthly Bulletin of Statistics. Import Content in Cereal Use--Cereal imports as a percentage of cereal use is calculated as net imports divided by production plus net imports. Data are for 1977-79.

1/ Data not available.
2/ Net exporter.
3/ Negligible.

of Africa are extensive, they have only been partially developed. Technical problems in crop production include highly erosive soils, susceptibility to drouth, shallow soils, low organic matter, severe pest problems, and lack of support facilities such as storage, drying, processing, and poor access to markets, roads and power supply. This has been aggravated by displacement of agricultural workers, e.g., to oil field work in Nigeria and Gabon. Substantial capital investments and technical assistance are needed to improve the self-sufficiency ratio in many African developing countries where food deficits are increasing sharply.

In contrast to Africa, land resources are a more critical constraint on expanding food production in the Near East, South Asia, and parts of Latin America. Inputs in production reflected by the level of fertilizer use are currently higher in these regions than in Africa (table 9). In many cases, the land resource is already being used to capacity, particularly in irrigated lands of semiarid areas such as Egypt and Pakistan. Areas with higher rainfall have better potential for expanded food production, e.g., Indonesia and Thailand. Thailand is currently a net exporter of cereals. However, the Asia Group in general and the Near East have less potential than Africa to become self-sufficient in food production due to the extremely large populations in countries such as India, Pakistan, Indonesia, and Bangladesh, and the shortage of arable land available for development. Both the Asia Group and Near East now import 30 percent of their cereal requirements.

There is significant variation among countries in the Latin America Group in terms of potential for expanding food production. The Caribbean countries and some mountainous countries in this group have a limited land base for expanding food production. Others in this group, e.g., Guyana, have only partially developed land resources, thus a much greater potential for expanding food production. However, the Latin American countries as a group have the resource base to become self-sufficient in food production with additional development.

Export earnings. Exports of livestock products from the USAID recipient countries are predominantly live animals and meat (appendix V., tables D-1). Only small amounts of milk products, eggs, and animal fat are exported from these countries. Except for Botswana, Cameroon, Kenya, and Swaziland, most of the exports in the Africa Group are live animals, primarily from Sahel countries. In Latin America, Colombia, Nicaragua, Paraguay, and Uruguay export some live animals to adjacent Latin America Group countries. The Latin American countries mostly export processed meats; the Far East exports mostly live animals; and the Asia Group exports small amounts of processed meats. Only the African Sahel and some Latin American countries are significant exporters among the designated developing countries.

The current outlook on future livestock exports from the Sahel is that they will decline due to continued growth in domestic demand, limited carrying capacity, and climate changes anticipated in the region (Winstanley, personal communication). Winstanley has attributed the reduced

growth rate in agricultural productivity to a long-term secular decline in rainfall for 17 countries in West Africa. However, 20 other countries in Africa have not been affected by this apparent environmental change.

Meat exports from the Sahel accounted for 23 percent of their total meat offtake in 1977 (table 10). Milk imports were 26 percent of total milk consumption. The potent [1] for increased livestock production is better in higher rainfall areas of Africa than in the Sahel since the Sahel is already being grazed at near capacity, and low rainfall prevents any major increase in livestock numbers.

LIVESTOCK PRODUCTION SYSTEMS

Rather than take a livestock species approach in this analysis, a production systems approach is used that analyzes the interacting components of livestock production as a unit. In many small farms in developing countries, livestock production systems are part of farm systems that also include crop-production systems. For this reason, farm-level characteristics are considered as well. A farming-systems approach does not imply that research must encompass the whole farm, but it does imply that in many cases the evaluation of a livestock production system is impossible without considering the farm as a unit.

An important step in the design of a livestock research and development strategy is the identification of priority livestock production systems. Priority systems will differ by region, by country, and often by area within a country. However, some production-system types are much more common than others and AID's livestock strategy should take into consideration the relative importance of different system types.

Methodology

The first step in the analysis was to devise a classification of the world's livestock production systems. This was done by characterizing the climate, predominant livestock and crop species, and the relative importance of livestock, crops, and mixed (crop and livestock) agriculture in each country with USAID missions. The analysis covered 26 countries in Africa, 7 in the Near East, 10 in Asia, and 17 in Latin America and the Caribbean (table 11).

The country characterizations made use of FAO data (1979) and information from the World Atlas of Agriculture (1969). The precipitation range for each country was taken from maps. Dominant ruminants were identified by ranking species according to number of animal units (omitting species making up less than 10 percent of the total ruminant animal units in a country). Nonruminants were identified and ranked by number of chickens and pigs produced per 100 economically active members of the country's agricultural population (chickens were omitted when fewer than 200; and pigs were omitted when fewer than 10). Important crops were identified and ranked by percent of arable land planted.

Table 10. Production and Disposition of Livestock Products in the Sahel, 1977

(1000 MT)	CAPE VERDE	CHAD	GAMBIA	MALI	MAURITANIA	NIGER	SENEGAL	UPPER VOLTA	TOTAL SAHEL
Meat Offtake	1.0	77.9	8.0	101.7	62.7	94.1	73.7	55.5	474.7
Meat Consumption	1.2	44.5	8.1	82.7	40.1	66.7	73.3	48.5	365.2
Net Meat Exports	(0.2)	33.4	(0.1)	19.0	22.6	27.4	0.4	7.0	109.5
Milk Offtake	7.0	260.7	5.0	154.3	167.3	357.0	119.8	87.0	1158.6
Milk Consumption	37.2	270.2	9.1	155.9	237.1	377.7	281.6	151.7	1520.5
Net Milk Exports	(30.2)	(9.5)	(4.1)	(1.6)	(69.8)	(20.8)	(161.8)	(64.1)	(361.9)

* Source: Sahel Development Program, USAID, September 1980.

TABLE 11a: AFRICA - Characterization of Countries by Type of Farm System (Country Percentage Calculatec on Regional Basis)

COUNTRY	TYPE OF FARM SYSTEM[1]	DOMINANT RUMINANTS[2]	ANIMALS NON-RUMINANTS[3]	DOMINANT CROP[4]	PRECIPITATION (mm)	% AGRI. POPULATION	% GRAZING LAND	% RUMINANT ANIMAL UNI
Botswana	Animal, A	Cat	Ch	Millet & Sorghum	200-800	0.4	11.2	2.2
Cameroon	Mixed, C	Cat-ShGo	Pi-Ch	Maize-Millet-Sorghum	400-2200+	4.4	2.1	2.4
Ethiopia	Mixed, C	Cat-ShGo	Ch	Millet & Sorghum	0-2200	16.6	16.4	22.4
Ghana	Crop	ShGo-Cat	Ch-Pi	Maize-M&S-Roots-Tubers	400-1400	3.9	2.7	1.0
Kenya	Mixed, C	Cat-ShGo	Ch	Maize	0-800	8.1	1.0	8.3
Lesotho	Mixed, C	ShGo-Cat	Pi	Maize	0-1400	0.7	0.5	0.6
Liberia	Crop	ShGo-Cat	Ch-Pi	Rice	Over 2200	0.8	0.1	0.07
Mali	Mixed, A	Cat-ShGo	Ch	Millet & Sorghum	0-1400	3.7	7.6	4.5
Mauritania	Animal, A	ShGo-Cam-Cat	L	Millet & Sorghum	0-400	0.9	10.0	3.0
Niger	Mixed, A	ShGo-Cam-Cat	Ch	Millet & Sorghum	0-400	3.0	2.4	3.4
Senegal	Mixed, A	Cat-ShGo	Ch-Pi	Millet & Sorghum	400-1400	2.7	1.5	2.1
Somalia	Animal, A	ShGo-Cam-Cat	Ch	Millet-Sorghum-Maize	0-800	1.9	7.3	12.4
Sudan	Animal, A	ShGo-Cam-Cat	Ch	Millet & Sorghum	0-1400	9.0	6.1	17.7
Swaziland	Mixed, D	Cat	Ch-Pi	Maize	0-1400	0.3	0.3	0.4
Tanzania	Mixed, C	Cat	Ch	Maize	400-1400	9.3	11.3	10.6
Upper Volta	Mixed, A	Cat-ShGo	Ch	Millet & Sorghum	400-1400	3.6	3.5	2.2
Zaire	Crop	ShGo-Cat	L	Roots & Tubers	1400-2200	13.5	6.3	1.2
Benin	Mixed, C	Cat-ShGo	Pi-Ch	Maize	800-2200	1.0	0.1	0.7
Burundi	Crop	Cat	L	Roots-Tubers-Maize	800-1400	2.4	0.1	.6
Gambia	Mixed, A	Cat	L	Millet & Sorghum	800-1400	0.3	0.1	0.2
Guinea	Mixed, D	Cat	Ch	Rice -Maize	800-2200+	2.5	0.8	1.2
Malawi	Crop	Cat-ShGo	Ch	Maize	800-1400	3.0	0.5	0.6
Rwanda	Crop	Cat-ShGo	L	Millet-Sorghum-Maize	800-2200	2.7	0.1	0.5
Sierra Leor	Crop	Cat-ShGo	Ch	Rice	Over 2200	1.5	0.6	0.2
Togo	Crop	ShGo-Cat	Pi-Ch	Maize-Mil-Sor-Ro-Tub	800-1400	1.2	0.1	0.3
Zambia	Mixed, C	Cat	Ch-Pi	Maize-Millet-Sorghum	800-1400	2.4	7.6	1.2

Source: Winrock International Livestock Research and Training Center, Morrilton, AR. 1981.

1. Cat = Cattle, ShGo = Sheep and Goats, Cam = Camels; ordered by % of ruminant animal units (Cat = 1.0, ShGo = 0.2, Cam = 2.0). Not noted if less than 10%.
2. Ch = Chicken, Pi = Pigs, L = Low Population; ordered by number of animals/economically active agricultural population. Not noted if less than 200 chickens or 10 pigs; ordered by high and low importance (over or less than 400 chickens, 20 pigs, respectively).
3. Predominant source of food calories. Scrimshaw and Taylor (Sci-Am 243(3), 1980) and % area planted from W. Atlas of AG(Inst. Geo. Novara, Italy, 1973).
4. Country classifications = animal, more than 5 animal units/economically active agricultural population; mixed, 1-5; crop, less than 1.

TABLE 11b: LATIN AMERICA - Characterization of Countries by Type of Farm System (Country) Percentage Calculated on Regional Basis)

COUNTRY	TYPE OF FARM SYSTEM[1]	DOMINANT RUMINANTS[2]	ANIMALS NON-RUMINANTS[3]	DOMINANT CROP[4]	PRECIPITATION (millimetres)	% AGRI POPULATION	% GRAZING LAND	% RUMINANT ANIMAL UNITS
Bolivia	Animal, B	Cat-ShGo	Ch	Maize-Wheat	0-1500+	6.3	21.2	7.6
Chile	Animal, B	Cat-ShGo	Ch	Wheat	250-1500+	4.9	9.3	5.9
Colombia	Animal, B	Cat	Ch	Maize-Wheat-Rice	750-1500+	17.1	13.8	32.0
Costa Rica	Animal, B	Cat	Ch	Maize-Rice	1500+	1.7	1.2	2.5
Dom. Rep.	Mixed, D	Cat	Ch	Maize-Rice	1000-1500+	7.6	1.2	2.7
Ecuador	Mixed, C	Cat-ShGo	Ch-Pi	Wheat-Maize	1000-1500+	8.1	2.0	3.7
El Salvador	Mixed, C	Cat	Ch	Maize-Sorghum	1500+	5.6	0.5	1.6
Guatemala	Mixed, C	Cat	Ch	Maize-Wheat	1000-1500+	9.0	0.7	2.1
Guyana	Mixed, D	Cat-ShGo	Ch-Pi	Rice	1000-1500+	0.4	0.8	0.4
Haiti	Crops	Cat-ShGo	L	Maize-Rice	1000-1500	8.8	0.4	1.5
Honduras	Mixed, C	Cat	Ch	Maize-Sorghum	1000-1500+	5.2	1.6	2.2
Jamaica	Mixed, D	Cat-ShGo	Ch	Maize-Rice	1000-1500	1.1	0.2	0.4
Nicaragua	Animal, B	Cat	Ch-Pi	Maize-Sorghum	1000-1500+	2.6	2.5	3.4
Panama	Mixed, D	Cat	Ch	Rice-Maize	1500+	1.5	0.9	1.7
Paraguay	Animal, B	Cat	Ch-Pi	Maize	750-1500+	3.4	11.8	6.4
Peru	Mixed, C	Cat-ShGo	Ch	Maize-Wheat	0-1500+	15.0	21.2	9.0
Uruguay	Animal, B	Cat-ShGo	Ch-Pi	Wheat	750-1500	0.8	10.9	16.6

Source: Winrock International Livestock Research and Training Center, Morrilton, AR. 1981.

1. Cat = Cattle, ShGo = Gheep and Goats, Cam = Camels; ordered by % of ruminant animal units (Cat = 1.0, ShGo = 0.2, Cam = 2.0). Not noted if less than 10%.
2. Ch = Chicken, Pi = Pigs, L = Low Population; ordered by number of animals/economically active agricultural population. Not noted if less than 200 chickens or 10 pigs; ordered by high and low importance (over or less than 400 chickens, 20 pigs, respectively).
3. Predominant source of food calories. Scrimshaw and Taylor (Sci-Am 243(3), 1980) and % area planted from W. Atlas of AG(Inst. Geo. Novara, Italy, 1973).
4. Country classifications = animal, more than 5 animal units/economically active agricultural population; mixed, 1-5; crop, less than 1.

TABLE 11c: NEAR EAST AND ASIA - Characterization of Countries by Type of Farm System (Country Percentage Calculated on Regional Basis)

COUNTRY	TYPE OF FARM SYSTEM[1]	DOMINANT RUMINANTS[2]	ANIMALS NON-RUMINANTS[3]	DOMINANT CROP[4]	PRECIPITATION (mm)	% AGRI. POPULATION	% GRAZING LAND	% RUMINANT ANIMAL UNITS
NEAR EAST								
Egypt	Crop	Bu-Cat-Cam	Ch-Pi	Maize-Wheat	Under 200	48.0	0.0	23.5
Jordan	Mixed, B	ShGo-Cat-Cam	Ch	Wheat	Under 250	1.9	0.3	1.4
Lebanon	Mixed, C	ShGo-Cat	Ch-Pi	Wheat	500-750	0.8	0.0	0.9
Morocco	Mixed, B	ShGo-Cat-Cam	Ch-Pi	Wheat	0-800	23.6	40.0	36.5
Syria	Mixed, C	ShGo-Cat	Ch	Wheat	250-500	9.3	26.9	11.3
Tunisia	Mixed, B	ShGo-Cat-Cam	Ch	Wheat	0-400	6.0	10.4	10.5
N. Yemen	Mixed, A	ShGo-Cat-Cam	Ch	Millet-Sorghum-Wheat	Under 250	10.1	22.4	16.0
ASIA								
Bangladesh	Mixed, D	Cat	Ch	Rice	1000-2500	9.6	1.8	9.2
Burma	Mixed, D	Cat-Bu	Pi-Ch	Rice	1000-2000	2.4	1.1	2.4
India	Mixed, C, D	Cat-Bu	L	Wheat-Rice	0-2500	57.8	36.7	67.8
Indonesia	Crop	Cat-Bu-ShGo	Pi-Ch	Rice-Maize	1000-2500+	11.8	35.5	2.8
Korea Rep.	Crops	Cat	Pi-Ch	Rice	500-2000	1.9	0.1	0.4
Nepal	Mixed, D	Cat-Bu	Pi	Rice-Maize	1000-2000	1.7	5.0	3.0
Pakistan	Mixed, C	Cat-Bu-ShGo	Pi	Rice-Wheat	Under 250	5.7	14.7	9.7
Philippines	Crops	Bu-Cat	Pi-Ch	Rice-Maize	2000-2500+	3.0	2.9	1.3
Sri Lanka	Crops	Cat-Bu	Pi	Rice	1000-2500	1.0	1.3	0.7
Thailand	Crops	Bu-Cat	Pi-Ch	Rice	1000-2000	4.7	0.9	2.6

Source: Winrock International Livestock Research and Training Center, Morrilton, AR. 1981.

1. Cat = Cattle, ShGo = Sheep and Goats, Cam = Camels; ordered by % of ruminant animal units (Cat = 1.0, ShGo = 0.2, Cam = 2.0). Not noted if less than 10%.
2. Ch = Chicken, Pi = Pigs, L = Low Population; ordered by number of animals/economically active agricultural population. Not noted if less than 200 chickens or 10 pigs; ordered by high and low importance (over or less than 400 chickens, 20 pigs, respectively).
3. Predominant source of food calories. Scrimshaw and Taylor (Sci-Am 243(3), 1980) and % area planted from W. Atlas of AG(Inst. Geo. Novara, Italy, 1973).
4. Country classifications = animal, more than 5 animal units/economically active agricultural population; mixed, 1-5; crop, less than 1.

The dominance of crop, animal, or mixed systems was calculated (table 11) by using the ratio of ruminant animal units to economically active members of the country's agricultural population. Countries with a ratio of ruminant animal units to economically active population of greater than 5:1 were classified as (I) animal-based; countries less than 5:1 but greater than 1:1 were classified as (II) mixed-crop and animal; and countries less than 1:1 were classified as (III) crop-based.

Basic Systems and Relative Importance

The review of the country characterizations and the correlations among precipitation, animal and crop species, and the rankings of animal, crop, or mixed systems suggested seven basic types of livestock production systems. In turn, the relative importance of each of these seven systems was determined for Africa, the Near East, Latin America, and the Caribbean. Table 12 summarizes the country-level characterizations, with the agricultural population, grazing land, and ruminant animal units shown as a percentage of the regional total for each factor. The actual numbers (as opposed to percentages) can be found in appendix II. The animals and crops listed are representative of system types, rather than definitive.

Three criteria were used to determine the relative importance of the system types: (1) agricultural population, (2) grazing land, and (3) total ruminant animal units associated with a particular system. These criteria were selected because some systems are used by many small farmers but do not require much land; other systems require extensive land but are used by only a few farmers; while other systems are used by many farmers but do not include a high percentage of animals.

The relative importance of each system type was analyzed by assigning a production system type to each country (with the exception of India, which was assigned two types: 65 percent to one and 35 percent to another, based on the relative areas planted to rice and wheat). The agricultural population, grazing land, and ruminant animal units were calculated for each system type in each geographic region.

Brief descriptions of these seven systems and their relative importance are listed below.

(I) Animal Based

(I-A) Livestock-based: pastoral migration of cattle, sheep, and goats; in low rainfall areas--predominantly in Africa and the Near East (although no country is assigned this category in table 11). Although the system in Africa is relatively unimportant in terms of the percentage of the agricultural population using the system (12 percent), it is very important in terms of percent grazing land devoted to the system (35 percent) and percent of the total ruminant animal units associated with the system (35 percent). As would be

TABLE 12: THE RELATIVE IMPORTANCE OF DIFFERENT ANIMAL PRODUCTION SYSTEMS IN COUNTRIES WITH USAID MISSIONS IN AFRICA NEAR EAST, ASIA, LATIN AMERICA, AND THE CARIBBEAN. IMPORTANCE IS MEASURED IN % OF THE (% AP), % GRAZING LAND (% GL), AND % RUMINANT ANIMAL UNITS (% RAU) ASSOCIATED WITH THE DIFFERENT SYSTEMS.

SYSTEM TYPE	GEOGRAPHIC AREAS											
	AFRICA			NEAR EAST			ASIA			LATIN AMERICA AND CARIBBEAN		
	AP	% GL	RAU	AP	% GL	RAU	AP	% GL	RAU	AP	% GL	RAU
I. Animal-based farms	12	35	35	--	--	--	--	--	--	37	70	74
A. Low rainfall; pastoral migration of cattle, sheep, and goats.	12	35	35	*	*	*	--	--	--	--	--	--
B. Medium rainfall; pastoral, cattle: Subtypes, 1 = extensive grazing for meat; 2 = intensive, milk and meat.	--	--	--	--	--	--	--	--	--	37	70	74
II. Mixed crop and animal farms	58	56	59	51	99	76	77	60	92	55	29	24
A. Low rainfall; cattle, sheep, and goats; millet and sorghum.	13	15	12	10	22	16	--	--	--	--	--	--
B. Low rainfall; camels, cattle, sheep, goats; wheat, clover.	--	--	--	31	51	48	--	--	--	--	--	--
C. Medium rainfall: cattle, sheep, goats; pigs and chickens; maize or wheat.	42	40	46	10	27	12	26	28	33	44	26	19
D. High rainfall; buffalo cattle; rice or roots and tubers.	3	1	1	--	--	--	51	32	59	11	3	5
III. Crop-based farms	29	8	5	48	1	24	23	40	8	9	1	1

* This system is important in the Near East; the analytical procedures used to characterize countries makes the system appear unimportant.

expected, farmers using this system have very few nonruminants. In some areas of Africa, this system is linked with mixed farms (system II A).

(I-B) Livestock-based: pastoral sedentary cattle; in medium rainfall (1000 - 2000 mm) areas--predominantly in Latin America. While only 37 percent of the agricultural population is associated with the system, 70 percent of the grazing land and 74 percent of the ruminants in Latin America are associated with this production system. The system, which includes few nonruminants, has two basic subtypes:

Subtype 1: Extensive grazing, primarily to produce meat on large ranches.
Subtype 2: Intensive grazing to produce both milk and meat (dual purpose) on small and medium-size farms.

(II) Mixed Crop and Animal.

(II-A) Mixed farms with cattle, sheep, and goats; millet and sorghum; in low rainfall areas (500 - 1000 mm)--predominantly in Africa, but also in a few areas of Central America. The system sometimes includes chickens, but seldom includes pigs. (This is true in non-Moslem areas in Africa, as well as in the Near East). This system is often linked with migratory grazing systems (system I A) in Africa.

(II-B) Mixed farms with camels, sheep, and goats; wheat and clover; in medium rainfall areas or in low rainfall, irrigated areas--predominantly in the Near East. Camels are used for draft as well as for milk and meat in this system. Chickens are also included and pigs only in non-Moslem areas (such as Lebanon).

(II-C) Mixed farms with cattle, sheep, goats, pigs, and chickens; in areas with enough rainfall (medium to high) to support a highly diverse mixture of ruminants and nonruminants and different crops--are dominantly in all areas except the Middle East. Maize and/or wheat are the dominant crops in this system. In Africa and Latin America, maize is the dominant crop, but in South Asia (for example, India and Pakistan) wheat is dominant.

(II-D) Mixed farms with buffalo and cattle; rice or roots and tubers; in high rainfall areas--predominantly in Asia (more than 50 percent of the agricultural population, and ruminant animal units are associated with the system) and in both Africa and Latin America. Pigs and chickens are often included.

(III) Crop-based Farms

This system could be subdivided into many different subtypes. The animals tend to be used for draft power, manure production, and holding of assets. In Africa, Asia, and Latin America, the system includes very few ruminants (5, 8, and 1 percent, respectively). However, in the Near East (primarily Egypt) 24 percent of the ruminant animal units and 1 percent of the grazing land are found in this category, indicating the importance of crop-residue as a feed source.

Limitations of systems methodology. There are two obvious limitations inherent in the methods followed in the preceding analysis. One limitation is that assigning a country only one production-system type can lead to misleading results. A country that is 45 percent System Type I and 55 percent System Type II is arbitrarily classified as Type II. Farm-level analysis would be much preferable to country-level analysis. Information is available as to farm size, species, and numbers of animals, crops, etc.; however, information is not available on land resources, crops, grazing land, and animals found on farm units.

Another limitation is that of using the ratio of ruminant animal units to economically active population as the only criteria for classifying a country as livestock-based, mixed, or crop-based. If a ratio of grazing to arable land had been used instead, the results would have been slightly different. For example, a country such as Ethiopia (classified as mixed) has a higher grazing-to-arable ratio than Somalia (classified as livestock-based); Sudan (classified as livestock-based) has a lower grazing-to-arable ratio than Ghana (classified as crop-based). However, the general results that would be obtained using the grazing-to-arable ratio would not be substantially different, since this ratio is highly correlated with the ratio of animal units to economically active population.

CONSTRAINTS TO LIVESTOCK PRODUCTION SYSTEMS

Characterization of livestock production systems involves clear definition of resource inputs, production processes, and product outputs. Any of these--inputs, processes, outputs--can be a constraint to system productivity. Alleviation of constraints is the implicit goal of most research, training, and development projects.

Constraints on livestock production systems have been classified in different ways (Scoville and Sarhan 1978; Child and Byington 1980; Fitzhugh and De Boer 1981). The three general categories of constraints used here include:

1) Ecological: land, climate

2) Biological: livestock nutrition--water, feed; livestock health --disease, parasites, and predators; livestock genotype--production and adaptation traits

3) Socioeconomic: labor availability and management skills; consumer taste/preference and disposable income; credit availability and cost; marketing infrastructure; and policies--trade, prices, and land tenure

Generally little can be done to change ecological constraints. However, well-designed AID supported strategies to resolve biological and socioeconomic constraints can have major impact on livestock production.

Constraints are listed and discussed as if they were discrete factors, each affecting livestock production independently. In fact, interactions among constraints are the rule, not the exception, with their effects often multiplicative rather than additive. One constraint may mask the effects of others. Thus, it is necessary to consider the total system so that multiple interacting constraints can be systematically resolved in order to achieve substantial improvement.

Ecological

Land and climate are primary determinants of the plant species that can be grown and, in turn, of the livestock species that can be produced in an ecosystem. Constraints that impact on livestock production are: land (topography and soil fertility) and climate (rainfall, temperature, and growing season). Of these, only soil fertility is readily amenable to change, and only if needed minerals can be applied economically. In livestock production systems, application of fertilizers would be limited primarily to crops in crop/livestock systems and to nominal amounts on seeded pastures. Primary minerals are nitrogen and phosphorus. Nitrogen fixation and animal manures can provide significant amounts of the nitrogen required in grazing and crop/livestock systems. Phosphorus is supplied almost exclusively by fertilizer.

Biological

Livestock nutrition. Feed supply is the most pervasive constraint to livestock production. It is directly dependent upon the production of plant biomass, both in grazing and crop/livestock systems. It is an absolute requisite that must be treated in the broadest context, including native and improved pastures, forage crops, feed crops, crop residues, and by-products. Feed supply has both quantitative and qualitative dimensions. Quantity can be increased by the proper stocking of rangelands, the establishment of improved pastures to complement native pastures, the planting of forage crops, soil and water conservation practices, and the timely harvest and storage of crop residues. Quality relates to the overall nutrient adequacy of pastures, forages, and other feeds consumed, as well as the means to correct any deficiencies through improved pasture management, fresh cut and stored forages, and/or supplementation.

Seasonal fluctuations in feed supply can be a special problem, especially in the wet/dry tropics. Whereas feed may be abundant in the rainy season, inability to preserve this abundance leads to dry-season deficiencies.

Nonruminant systems based on imported concentrates are vulnerable to changes in policy on imports and foreign exchange. Nonruminant systems based on household wastes are generally constrained by the lack of systematic management of feed supply and livestock.

The availability of water as a nutrient is often a primary constraint to livestock production, particularly in arid and semiarid regions. Many projects have been dedicated to finding and delivering livestock water. Often results have been beneficial with new lands opened for grazing and increases in productivity. However, in other instances, there have been unanticipated problems, such as overstocking and land degradation near water. These experiences emphasize the need to first understand the nature of the water constraint and its environmental and economic ramifications before programs are implemented to alleviate this constraint.

Livestock health. Constraints imposed on livestock production by diseases, parasites, and predators are substantial and highly visible. Trypanosomiasis and its vector, the tsetse fly, sharply limit livestock production in Africa from the southern edge of the Sahara to 15° S. On a worldwide basis, ticks take a heavy toll in blood loss, skin irritation, and disease transmission (e.g., theileriosis, babesiosis). African swine fever--wherever it appears--completely disrupts established swine production since the only effective control is depopulation.

In much of the world, predators threaten small stock and even cattle so that they must be kept under constant watch during the day and closely confined at night. Thus, grazing is limited to areas relatively close to the night pens, often during midday when animals suffer heat stress. In these situations, poor nutrition--rather than actual predation--reduces productivity.

Substantial progress has been made in technology for prevention and treatment of animal health problems. However, the means to deliver this technology is frequently lacking in developing countries where health officers are in short supply, roads are poor, and producers are suspicious of government programs.

Livestock genotype. For most livestock in developing countries, genetic potential for adaptation takes precedence over improved productivity. Often there may be negative genetic correlations between traits for adaptation and production. Only after nutritional and health constraints are resolved can there be advantage to genetic improvement in production traits, such as milk yield.

Outcrossing to highly productive genotypes (generally imported from temperate regions) will generally be the most rapid means for improving genetic potential if imported stocks can be kept alive and fertile under tropical conditions. Modern technologies of artificial insemination and embryo transfer provide new options for introducing new genotypes.

Socioeconomic

This category includes the many human factors which affect livestock production. These factors are often subtle in effect. For example, traditional sex roles may dictate which family member cares for livestock; culturally derived stigma may inhibit acceptance of new technologies; political priorities may lead to price controls on livestock products; and so on.

Often constraints resulting from human manipulation of resources can be alleviated. Education and training programs can improve resource management skills. Objective analysis of livestock production systems can lead to better sector planning and promote government policies which enhance productivity.

Range/pasture management. Pastoralists and livestock producers usually are not concerned with range management so long as feed resources are available; rather, they concentrate on management and movement of animals to maximize productivity, to minimize death losses, and in many instances, to expand animal populations. However, when range and pasture feed resources are inadequate, producers become acutely aware of competition for these feed resources and the need for remedial action, whether within their own group/grazing territory, in collaboration with other groups, or at the expense of others.

In many arid and semiarid regions of the world, ranges are now stocked to capacity, or beyond. USAID estimates that the average stocking capacity of the Sahel is approximately 22 million bovine units with a variation of two million more for rainy years and two million less for dry years (USAID, Sahel, 1980). These numbers are somewhat less than the peak population of 28 million in 1977. Effective programs to control the use of rangelands are imperative to arrest the deterioration of and to stabilize rangelands in fragile arid areas, to protect rangelands that are at the threshold of degradation, and to improve rangelands in the higher potential areas where degradation has already taken place or is in progress.

In humid and subhumid savannah regions, ruminant populations are often below the grazing capacity of the grasslands. Although range and pasture management programs are not needed to protect pasture lands, they are needed to increase productivity of existing herds through improved pasture management and the establishment of improved pastures for the critical phases of the life cycle (Sanchez 1981).

Human manipulation factors, including overgrazing and excessive burning, can reduce vegetative cover and soil organic matter, and contribute to soil erosion, water runoff, and deterioration of plant vegetation. Controlled burning in undergrazed areas can be helpful, however, in promoting the growth of desired forage species and in the suppression of undesirable woody species. In both instances, human manipulation is the causal factor.

Livestock management. Prevailing livestock management practices both contribute to and detract from the productivity and efficiency of livestock production systems in developing countries. On one hand, grazing systems used by pastoralists and family farm crop/livestock systems have been developed through trial and error, and proven practices and systems have been handed down from generation to generation. Many of these systems are finely tuned to their parent ecosystem, making efficient use of available resources with minimal external inputs and risks to producers. Even minor interventions could disturb delicate balances within these systems.

On the other hand, many of the traditional practices and systems need modification to fit more intensive agricultural systems, particularly in crop/livestock systems but also in improved grazing systems (Raun 1976). Since both crop/livestock and grazing systems in humid and subhumid regions will, of necessity, become more intensive as land/population pressures increase, traditional livestock management practices and systems will become increasingly less applicable, and therefore a constraint. The production systems (table 12) where management is now a constraint, and where significant improvements probably could be made, include the following:

(1) Animal-based farming system
- o System IB, medium to high rainfall

(2) Mixed-crop/animal farming systems
- o System IIC, medium rainfall, mixed livestock and crops
- o System IID, high rainfall, mixed livestock and crops

(3) Crop-based farming systems
- o System III

This is not to imply that improvements in management and productivity could not be made in systems in arid and semiarid areas, but only to indicate that improved management systems will be needed more and will have greater impact in the higher rainfall, higher potential areas.

Marketing and production economics. The principal economic constraints are the factors that impinge upon the input/output price relationships for live animals and the products they supply including meat, milk, traction power, manure, hides, pelts, and transportation. A characteristic of most livestock-production systems in developing countries is the low input and output levels. This is largely a consequence

of unfavorable input-output price ratios, shortage of capital with the consequent high discount rate faced by the producer, a substantial risk element caused by high incidence of morbidity and mortality, and a lack of regular, sophisticated markets capable of absorbing large quantities of high quality livestock products.

Prices paid to producers for livestock and livestock products are often substantially less than in developed countries (Szczepanik 1976). These lower prices reflect, in part, quality differences, but more important they are the result of low purchasing power by consumers, poorly developed market infrastructure which increases marketing costs and lowers the producer price received, price manipulation by governments, restrictions on animal movements and animal slaughtering, and poor bargaining power by small producers.

Livestock production, particularly for ruminants, is a long-term process with high risks attached. Therefore, the price of capital is a critical factor in determining the types of animals produced, use of the animals, age of selling, and net return available to the producer. Credit programs have had a limited impact in many cases because the supply of suitable animals for purchase is usually limited and the price is subsequently bid up due to the credit program. Another factor is fungibility, wherein the loan merely serves to increase the total farm assets which the farmer then reallocates as he best sees fit. Von Pischke and Adams (1980) give an excellent example of a livestock loan program in Africa which had relatively little impact on the target sector (small farm dairying) but a substantial impact on overall farm production.

With regard to livestock marketing, recent studies have indicated a high degree of efficiency within the livestock marketing sector in developing countries (Sandford 1981; Shapiro 1979). The most pressing constraints are the lack of cost-reducing infrastructure such as roads, bridges, local or central marketing facilities, and market information. These investments and services are not generally provided by marketing agents.

The situation is not so clear on the input marketing side which is, in general, poorly developed. To achieve a successful development strategy, additional inputs such as pesticides, vaccines, minerals, concentrate feeds, and phosphatic fertilizers have to be made available regularly and at reasonable cost. Most studies have found that introduction and promotion of a single livestock input has relatively little effect and an integrated, adaptive approach is needed (Goldmark 1980). Input use increases substantially only when more productive animals are introduced which give higher productivity per unit of input or when market conditions are perceived to have improved.

Cultural constraints. Although many development specialists cite the disadvantages that accrue from animals being held for cultural reasons, the opposite can often be argued. (Probably the most notable disadvantage would stem from cattle held as sacred objects--which are neither consumed nor harvested and require large quantities of feed without producing useful products nor food reserves for man.)

Generally when livestock are held for so-called cultural reasons, there is often an overriding subsistence or economic rationale. Throughout the world, livestock are esteemed and are often considered as members of the farm/ pastoralist household. They could be considered a drain on family resources, particularly for feed; actually, however, some livestock are largely scavengers of feeds, insects, and nematodes that would otherwise be wasted. Not only are food, fiber, manure, skins, and traction power produced from these otherwise wasted feed resources, the animals themselves serve as food and capital reserves.

Also, most of the world's livestock producers take pride in their animals and consider them to be a status symbol, whether they be western U.S. cattlemen or African pastoralists with several hundred cows, or the Latin American or Pakistani smallholders with a few cattle and/or goats. Although the high death losses incurred in the 1972-74 drouth in the Sahel could perhaps be attributed to overstocking caused by herders holding animals for status reasons, it is more likely that these animals were held because this was the only practical way to "store" forage for future use and was the only mechanism to maintain a food and capital reserve. Natural forces came into play, just as they have for millenia, reducing populations to the carrying capacity of the ecosystem. The process is repeated continually, always with some lesson to be learned with each event.

In many cultures, animals also are held for sport, e.g., fighting cattle, butting rams, racing horses. Of course, this is a drain on feed and capital resources; however, if responsible and humane, such sport can provide welcome entertainment and diversion.

Livestock As Part of the Agricultural System

Livestock are a component of a larger agricultural system, and should be considered in this context. Livestock may compete with other components for limited resources. For example--on small farms with mixed crop-animal systems--land, labor, and other resources used to produce livestock feed may be at the expense of food-crop production. Thus, livestock themselves could be a constraint to the welfare of the farm family--indeed, this claim is often made by those who are antilivestock. However, farmers are rational beings, unlikely to keep livestock unless they provide a net benefit to farm productivity.

SECTION II

RECOMMENDED PRIORITIES AND IMPLEMENTATION STRATEGY

SCOPE AND PROCEDURES

This section outlines recommendations for a USAID technical assistance strategy to improve the livestock sector in developing countries. It focuses specifically on (1) setting priorities and (2) implementing effective livestock technical assistance programs. It is limited to the production aspects of animal agriculture. It does not address infrastructure requirements outside technical assistance, nor the constraints of the host country or other development institutions. The strategy encompasses research and development activities in host countries, regional research and development agencies, international agricultural research centers, and involves U.S. institutions. Recommendations are premised on the previous analysis presented in this paper, as well as upon information and experience available from within Winrock International, and from sources cited in the bibliography and elsewhere.

BASIC PRIORITIES FOR TECHNICAL ASSISTANCE

The process to determine livestock technical assistance priorities must ultimately result in the definition of action programs that will significantly improve the agricultural sector in less developed countries by 1) conserving and protecting the land, vegetation, and water resource base upon which livestock production depends, and by 2) improving grazing and crop/livestock systems in which livestock are found.

The process of determining priorities must begin with an identification of the types of producers that will benefit from technical assistance programs. This is followed by an identification of the major categories of livestock production systems that are amenable to improvement. Within these systems, specie priorities must be established by considering their importance within the farming systems, both in the utilization of available feed resources and in providing other useful outputs from the farming system.

The next step is to determine livestock production constraints that are amenable to change. Then priority technical assistance activities in research, training, technology transfer, and production inputs can be identified to alleviate these constraints. Although the order may vary, research needs are generally determined first--specifically those related to the application, adaptation, and generation of technology that will improve livestock production systems.

After production-technology priorities have been established, determination can be made of the training needs for research/development personnel and producers and the technology-transfer priorities.

This basic process would be applicable to set (1) general priorities for worldwide technical assistance programs and (2) specific priorities at the country/regional level. However, direct extrapolations cannot be made from priorities at the worldwide level to specific country requirements. Nonetheless, worldwide general priorities serve as the basis against which to evaluate needs at the country/regional level.

HIGHEST RECOMMENDED PRIORITIES

Producers

The primary target population is the family farm unit--owned and/or operated by the farm family, with principal income and employment derived from this unit, and with food produced not only for subsistence but also for market.

Ecosystem

Tropical and subtropical regions are the primary target ecosystems. Of the 60 USAID host countries, only 12 are located outside of the tropical latitudes (and these have only 12.8 percent of the total animal units). Although some countries in the tropical latitudes have high elevation and temperate climate areas in which livestock are raised, most of the livestock are now found in tropical/subtropical regions, and these numbers will increase as agriculture continues to expand into these regions.

Production Systems

Priorities on livestock production systems should be based on these criteria: 1) quantity of food, fiber, and traction power derived from animals; 2) proportion of the total livestock population found in a system; 3) potential for major increases in productivity with interventions that can be successfully introduced and that fall within the resource limits of producers at an acceptable level of risk; and 4) need for technical assistance/technology that is not otherwise available.

Following these criteria, highest priority is placed on mixed crop/livestock systems and range/pasture (livestock) based systems.

Of these two, higher priority is placed on mixed farming systems in medium to high rainfall and irrigated regions where the greatest proportion of livestock and livestock products are found/produced. In the analysis presented in the first section of this paper that characterizes the dominant type of agriculture at the country level, in each of the 60 USAID countries, the data indicate that an estimated 75 percent of the ruminant livestock are found on mixed crop/livestock farms. This is consistent with the estimate made by McDowell and Hildebrand (1980) that 85 percent of the ruminants in developing countries are on small farms. While the percentages are based on assumptions that are open to question, there would seem to be little doubt that in most of the 60 USAID countries more of the agricultural population is dependent upon the income produced from livestock in mixed farming systems than in other types of systems.

Second priority is placed on pasture-based systems in semiarid, subhumid, and humid areas, particularly in Africa and Latin America, on lands that are not suitable for cropping, either in the short- or

long-term. These include lands on which high numbers of animals are now found or there are major programs for the expansion of livestock production in these areas. Worldwide it is estimated that 18 percent of the ruminants are found in these systems.

A lower priority is placed on those systems where ecological constraints to production cannot be alleviated, where there is little or no potential for increased production and where natural controls bring livestock populations into balance with the environment, e.g., Sahel. Also, a lower priority is placed on those systems where livestock are now of minor importance, e.g., plantations, vegetable farms, remote-uninhabited areas.

Attention is called to the use of cattle for both meat and milk production in most crop/livestock systems and in many pasture-based systems. A recent evaluation of the Colombian livestock industry indicates that 46 percent of the milk that enters commercial channels comes from so-called "beef cattle" herds, most of which are located in tropical climates (Colombia, Ministerio de Agricultura, 1974). This milk is a principal source of income, particularly where there is a demand for milk in urban centers. On the north coast of Colombia, Rivas (1974) found that on crop/livestock farms up to 200 hectares, sales of milk accounted for 33 percent of total income. This is especially significant considering that in systems of cow with calf (vaca con ternera) milk production averaged only 2-3 liters per head per day. In addition, an undetermined amount of milk was used for home consumption. Similarly in an assessment of the agricultural sector in Costa Rica, 40 to 53 percent of total farm production on farms from 2 to 50 hectares was derived from livestock products, with one-fourth to one-third supplied by milk (USAID, Costa Rica, 1977). In Paraguay, livestock and livestock products provided 24 to 37 percent of total farm income on farms of less than 5 hectares (USAID, Paraguay, 1976). These examples emphasize the importance of milk and meat production in mixed-crop/livestock and pasture-based systems, and the attention needed for the improvement of these dual-purpose systems.

Goats, sheep, and buffalo also are used for both meat and milk production in some regions although their use is not as extensive as that of cattle.

Species

The primary emphasis should be placed on domestic ruminant species, i.e., cattle, sheep, goats, and buffalo.

Higher priorities for ruminants are merited because:

- Ruminants offer the only practical mechanism for harvesting a usable product from at least two-thirds of the world's agricultural land that is unsuitable for cropping.

- Ruminants can transform low-quality crop residues and other lignocellulosic materials (which have no value for direct human consumption) into milk, meat, hides, fiber, and manure, and into "fuel" for animal traction power.

- Ruminants provide most of the agricultural traction power in developing countries, utilizing farm-produced biomass as the energy source which minimizes/obviates the need for expensive and scarce fossil fuel for internal combustion engines.

- Many LDCs depend upon ruminant products for a significant proportion of their foreign exchange earnings which benefit a broad spectrum of producers and consumers.

The majority of swine and poultry are found in family farm, mixed crop-livestock units. They provide meat and eggs for home consumption and for sale. Additionally swine are living "piggy banks," simultaneously serving as food and cash reserves. On family units, both species are scavengers of feeds that would otherwise be wasted, and sinks for feeds that are not readily marketed. Only in commericalized units are significant amounts of feedstuffs used that might be otherwise used for direct human consumption.

While recognizing the major importance of swine and poultry, it is argued that USAID should not devote major effort to these species because: 1) swine production technology is now available and readily applied over a wide range of ecosystems and production systems; and 2) commercial poultry production technology is likewise available and readily applied worldwide, and poultry which enters commercial channels is increasingly dominated by commercial poultry operations. On the basis of these assumptions, it is suggested that 1) swine and poultry improvement programs should be incorporated principally within national programs with emphasis on the application and adaptation of technology within comprehensive farming-system-oriented research and development programs, and 2) the private sector can promote and develop the production of poultry, eggs, and swine in larger sized commercial operations and does not need technical assistance from the public sector.

Production Constraints

The principal constraints to livestock production that can be alleviated by research are: 1) feed supply and feeding systems, 2) livestock management, 3) control of disease and pests, 4) germ plasm improvement, and 5) production economics. Of these constraints, feed supply and feeding systems are the most pervasive and by far the most limiting. The livestock management constraint is of human origin. While effective controls have been developed for most diseases and pests of ruminants, some difficult constraints remain, i.e., trypanosomiasis and theileriosis in Africa, and ticks worldwide. Germ plasm improvement becomes the limiting factor as the higher order constraints are removed. In production economics, availability and cost of production inputs are the most critical.

Research Objectives

Two research approaches are proposed to remove production constraints.

(1) Systems-based research, generally applied and adaptive in nature and conducted principally in national and regional programs, is proposed for:

- o Range and pasture management
- o Year-round feeding systems
- o Livestock management and breeding practices
- o Disease and pest control
- o Production economics

(2) Problem-oriented basic research is proposed to generate new technology; this research would be conducted in specialized research centers having the institutional base and expertise to conduct sustained problem-oriented research. Such research is needed in:

- o plant selection and breeding (including recombinant DNA techniques) to develop superior pasture and forage species and other crops to be used as animal feed

- o animal breeding (including recombinant DNA techniques) to incorporate desirable production and disease/pest resistance traits (gene/s) in animals lacking these traits (e.g., the high reproductive rate of the Australian Booroole Merinos which may be controlled by a single gene; the trypanotolerance trait of N'Damas)

- o genetic engineering for the production of vaccines for diseases not having effective vaccines, principally trypanosomiasis and theileriosis

- o biological control of major pests of livestock, principally ticks

- o the development of improved ruminant traction power systems

- o marketing of livestock and livestock products

There are perhaps many other production constraints and research efforts that could be mentioned. However, most would be either subsidiary or tangential to the previously noted constraints/potentials. They would probably be highly situation specific and could be addressed only at the local level (most commonly within farming-systems research in national institutions).

Training

Every country and its agricultural institutions must have on-going programs to train agricultural management and technical personnel and producers. Long-term development solutions, or the lack of them, depend upon man's ability to cope with his own environment, to resolve his own problems, to develop his own livelihood. Thus, human resource development is a key element in the development process. People make or break programs; only people can generate and adapt technology, and only people can evaluate and respond to changing conditions and technological needs.

The first priority is to train top-level persons who can assume leadership responsibilities in the planning and management of livestock research, training, and development programs. Such persons are often available in the more advanced, developing countries but not in the less advanced countries. And, in practically all of the developing countries, there is a deficiency of operational personnel qualified to plan and direct field level development programs. Although persons with university or diploma degrees may be available, many lack the production training and experience to capably direct programs. And while producers are skilled and informed on field tested production methods that have been developed through trial and error, they are not informed on technological interventions that would improve their traditional systems nor on interventions for more intensified systems.

This emphasizes the priority that must be placed on programs to train key persons at all levels, i.e., decision, operational, and producer. Key persons are those who can produce multiplier effects. Too often training programs have little impact because people trained did not multiply their knowledge/production skills. Training priority, therefore, must be in descending order, with highest priority on (1) the decision makers in national institutions, (2) key operational personnel within these institutions, and (3) producers. Since producers are at the action point, it may be argued that training should simply focus on producers without concern for higher level training. This argument is refuted, however, by the absolute need for trained decision makers, leaders, and trainers qualified to lead and train others before producers can be trained on a sustained basis.

All of the foregoing training programs should be carried out in country institutions/programs, if possible. Producer training must be country based. Also, most operational livestock production personnel should be trained in-country to at least the diploma/university degree level whenever possible. Actually many LDC agricultural specialists have received graduate and undergraduate training in programs sponsored by USAID and other development agencies and private foundations. Nonetheless, there is a continuing need for advanced training of such key agricultural specialists in developed countries. U.S. institutions have been at the forefront in this training role. Although great advances have been made in academic training in universities in developing countries, external training is still needed in those areas not addressed by

local institutions, and for the continued infusion of new ideas and approaches into country programs. There is a particular need for training in integrative disciplines such as systems analysis and production-systems economics. Dealing effectively with animals as part of farming systems will require an innovative approach to both formal and nonformal training, plus exposure to a much broader base of subject matter.

Technology Delivery Systems

A two-way, multi-path technology transfer process between researchers and producers is proposed. This method utilizes a Farming Systems Research (FSR) approach that seeks to learn first from the local people what they already know about their own systems. Then technology transfer moves on multiple paths into field testing and evaluation of improved technology at the local level. Farmers and researchers concurrently promote and obtain feedback for setting research priorities and guiding programs.

FSR proponents generally emphasize that when the farming system is perceived as a source of technology, transfer is more effective than with the traditional "top down" approach. In FSR, information is gathered, analyzed, or interchanged continuously within several stages of research: 1) from the producer (with his accumulated knowledge and experience in the test area) information flows to the more formal research system; and 2) from the multidisciplinary research team in the field testing of alternatives, information flows to the producer. Thus, the FSR process serves to channel information between producers and appropriate research system components (national, regional, and international). The joint scientist-farmer effort in the analysis and evaluation of the research becomes a "do-it-yourself" information-gathering and delivery tool. Moreover, many of the results can plug directly into a worldwide system (through international centers)--while serving simultaneously as "eyeball" evidence for the producer, his family and friends, as well as local agricultural agency workers, and policy makers. The expression of the production alternatives within farming systems serves as a universally understood language. For the farmer, the testing of results and delivery are simultaneously and immediately observable. Similarly, the research team can make on-site analyses of the technologies and their goodness-of-fit within the local ecosystem. Firsthand knowledge is obtained of incentives and constraints bearing directly on the farmer. They can also identify external policy issues that affect decision making.

For resource-poor national programs, the FSR team can strengthen, or serve in lieu of, the traditional extension arm. Because of the specialized technical training of the team, data retrieved from the field can be analyzed and fed into (and from) the formal research system (international centers and universities,) much more precisely and quickly. However, further relay of the data requires development of "analysis stations" with information support staff helping in standardizing terminology and reporting procedures. FSR research also

provides a convenient and efficient vehicle for other development institutions to interface with the farming-system components (training, special projects, and other related social science analysis).

Marketing and Production Economics

Four major considerations need to be taken into account in the formulation of appropriate marketing strategies to complement the technical elements outlined above.

- A common constraint in developing countries is the negative impact upon the farming sector of pricing policies, slaughter regulations, and controls on animal movement. It is understood that these regulations are expressions of very real concern to host country governments; however, it must be recognized that implementation of country livestock development programs will usually require changes in these control mechanisms to allow producers to respond to new opportunities for using improved inputs and new opportunities for marketing animals and animal products. An effective strategy for implementing these changes often requires research inputs that demonstrate losses from current policies, as well as the potential benefits from implementing more rational, producer-oriented policies (e.g., increased production, income, employment, and foreign exchange savings).

- An effective marketing strategy should place major emphasis on the input marketing side since the recommended strategy is input oriented. In most developing countries, the livestock input marketing sector is very poorly developed, while the output marketing sector represents an old, well-established set of institutions. Research is needed on specific problems in marketing inputs such as feed, forage seeds, fertilizers, innoculants, vaccines, insecticides, acaricides, fencing materials, and drenches.

- The marketing of live animals and animal products such as meat, milk, hides, and skins requires a considerable research input since many public sector programs are based upon assumptions that may be faulty concerning performance of the marketing sector. Development strategy should concentrate on improving competition (if this is a problem) by encouraging entry into this field of activity and by providing infrastructure such as selling facilities, market information, feeder roads, and processing facilities.

- Milk marketing should receive high priority since studies show substantial producer responses to the development of regular milk-purchasing facilities. There are also major secondary effects through increasing the supplies of hygienic milk products to susceptible groups of the population so that

substantial expenditures on improving milk marketing, milk pricing, and repayment methods may give high returns to the host country. In addition, a good system of milk marketing provides a steady and reliable cash income to the farm family.

These marketing research and development strategies are all oriented towards improving the input/output price relationships facing the farmers. In addition, it must be recognized that livestock represent a major capital asset to the farmers. A variety of schemes have been tried to reduce this cost, including animal purchases for farmers, animal loan agreements with offspring being provided as repayment, specific loans being extended for the purchase of animals and for short-term and long-term input purchases, and gifts made of immature animals. The critical element for any scheme to alleviate the capital requirement for the animal and complementary inputs is that the scheme must proceed in step with the other elements of the strategy or the return on the additional investment will be determined by the traditional production system and will, in general, be quite low. In addition, the institutional arrangements governing resource use for animal production require careful study--and where this is deemed a major constraint, innovative strategies will be needed with strong local-level inputs.

STRATEGY RECOMMENDED FOR IMPLEMENTING PROGRAMS

An implementation strategy recommended here is consistent with the priorities identified above. National research programs should identify priority livestock production systems and the primary constraints associated with each system, then implement field research and technology-transfer activities to find and disseminate innovations that will improve the farmers' present production systems. Provision must be made for the academic and field training of research and technology-transfer personnel. Regional centers should conduct research with livestock production systems of regional importance and provide methodological assistance to national programs. International Agricultural Research Centers (IARCs) should continue to conduct research on specific commodities and specific problem areas that are presently known to be major constraints in many production systems in many countries. As national programs identify priority production systems and their primary constraints, the international centers should focus their research on specific areas with regional and/or international impact. U.S. institutions should assist national programs through bilateral programs and through research efforts in areas where they have expertise and where the research would be directly relevant to the situation in less developed countries. Also U.S. institutions should collaborate with the IARCs in basic research to develop new technology to advance agriculture.

Host Country Programs

National program research and development. Implementation of any technical assistance program requires both a clear research and develop-

ment strategy and the institutional capability to carry out the strategy. USAID bilateral development projects should assist host countries in both of these areas. The design of a USAID livestock research strategy must be keyed to the role of national research and development programs in developing countries. These programs are often the weakest link in the present agricultural research and development network (National Academy of Sciences 1977; World Bank 1981). The creation of the International Services for National Agricultural Research (ISNAR) and the growing tendency of international centers to station staff in other countries as part of outreach programs are responses to this deficiency.

However, the conclusion that national programs are the weakest links may have been over-emphasized by the international research centers in the same way that research institutions often blame extension agencies for the farmer's slowness to adopt new technology. Rather than accept the fact that some new technology may not be appropriate to the farmer's production system, international centers have on occasion criticized national research institutions when the technology does not produce the expected impact. However, there is little doubt that national institutions are a critical link to livestock research strategy.

Almost all research-strategy diagrams include a two-way flow of technology: from the researcher to the extension agent to the farmer, and then feedback from the farmer to the extension agent to the researcher. However, in reality, the flow of return information from the field is usually very limited. Thus, in recent years many national and international research institutions have shifted emphasis from a purely field station approach to an on-farm research approach. This strategy has been called Farming System Research (FSR). This approach does not imply that the research effort is directed at the whole farm or at systems analysis for its own sake. In most projects with an FSR emphasis, only specific crops or cropping systems have been analyzed quantitatively. However, an FSR approach does imply that the farm is a whole, and the interactions occuring among the production systems on the farm, be considered in the selection and evaluation of potential technology.

In the identification and analysis of important livestock production systems in this paper, we have pointed out the importance of mixed production systems. Also we have noted the difficulty in generalizing about livestock production systems and the influence of the livestock component on the ecosystem. Livestock research on mixed farms is almost impossible without taking an FSR approach.

Another advantage of the FSR approach is that, following established development criteria, it allows national research programs to identify the important livestock production systems in specific areas. In this way, specific problems can be identified and studied and national research institutions can request help from international centers in designing research programs to resolve critical problems. The FSR approach presented here proposes that research be conducted on only those components of the farming system which are amenable to major improvements in productivity; it does not propose research on total farm systems per se.

Institutional problems are among the initial barriers when an FSR strategy is adopted by national research programs. Most national institutions are organized along commodity lines, and cannot simply be reorganized overnight. Since commodity programs have an important function within FSR methodologies, a logical way to implement an FSR project would be to require integration of commodity programs into area-specific, multidisciplinary teams. The make-up of these teams would depend on development objectives and the predominant type of farm system.

Most FSR experience, to date, has been with crop production; however, the general methodological steps are similar to those of an FSR program with a livestock emphasis. Many research scientists have contributed to the development of FSR methodology, including (but not limited to) Harwood (1979), Zandstra (1979), Hildebrand (1978), Norman (1978), Hart (1979), Lagemann (1977), McDowell and Hildebrand (1980), and Fitzhugh and De Boer (1981). Of the international centers, IRRI has contributed most to the development of FSR methodology. However, regional centers, such as CATIE in Central America, and national research programs, such as those in Guatemala and Indonesia, have made major contributions.

Basic FSR Methodology. Generally, FSR includes:

1. identification of target area
2. initial characterization of current production systems
3. identification of physical, biological, and socio-economic constraints
4. identification of potential alternatives
5. evaluation of potential alternatives on selected farms
6. evaluation of best alternatives on many farms
7. mass transfer of technology to entire target area

Figure 3 is a diagrammatic summary of a general FSR strategy that should be useful as a guide for national research programs. It combines the methodologies developed by various institutions and individuals with the foregoing livestock and farm-system analysis.

The general strategy begins with the selection of specific geographically defined target areas. Criteria for target-area selection include country development objectives, technical capabilities, institutional structure, and economic resources. The results of an initial characterization are used to identify the farm-system type(s) that will be emphasized. The farm-system type selected will depend on the development objectives. For example, if meat export is an objective, large livestock-based farms may be selected even though this farm type represents a small percentage of the farms; however, if farmer welfare is an objective, small mixed farms may be selected for emphasis.

PHASES IN A TECHNOLOGY SELECTION, EVALUATION, AND TRANSFER PROCESS

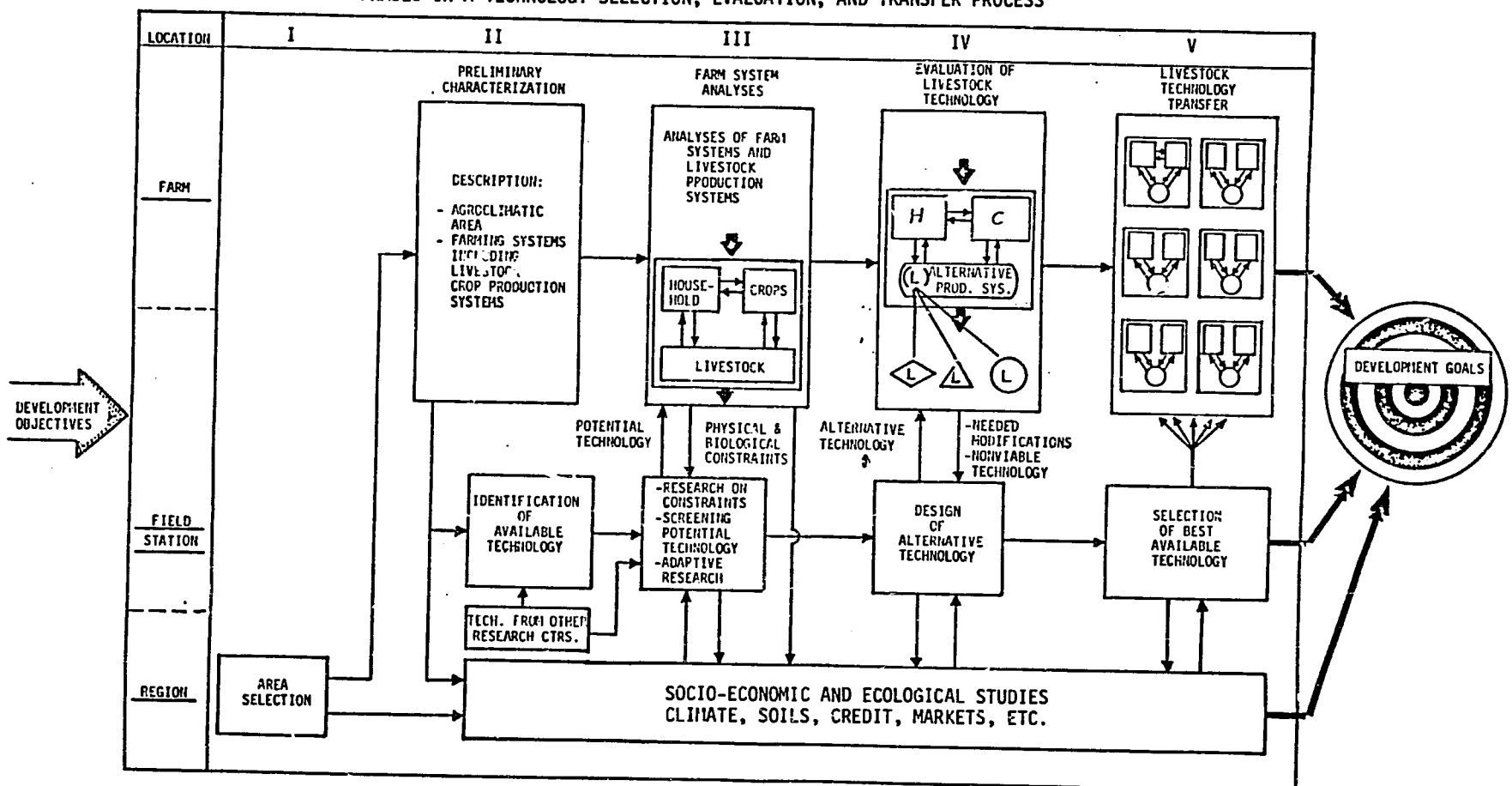

FIGURE 3: A GENERAL FARMING SYSTEMS RESEARCH STRATEGY TO DESIGN ALTERNATIVE LIVESTOCK TECHNOLOGY THAT FITS INTO EXISTING FARMING SYSTEMS, AND CAN BE TRANSFERRED AND ADAPTED TO PRODUCE THE DEVELOPMENT OBJECTIVES IDENTIFIED FOR A GEOGRAPHIC AREA.

Source: Winrock International

Field station trials of potential technology suited for the specific environment can begin simultaneously with on-farm analysis of specific production systems. If crop-based farm systems are selected, the role of the livestock specialist will be that of advising crop specialists as to livestock-related evaluation criteria that can be applied in cropping-system experiments. If livestock-based farm systems are selected, the role of livestock specialist will be dominant and crop specialists will play an advisory role. The mixed-farm systems, where crop and animal specialists must work together, requires methodologies that are not yet available; but given the conclusions from the preceding sections of this paper, the development of a mixed-system methodology is a high priority.

The strategy summarized in Figure 3 assumes that the first step in a mixed-system methodology is the identification of the specific crop/livestock system to be analyzed. Examples might be: maize residue--dual-purpose goats; sweet potato--swine; and maize and bean fields plowed with oxen. Most mixed systems would include other feed sources in addition to crop residue. For example, cattle on the same farm may be grazed, fed cut-and-carry forage crops, and tethered to feed on crop residue. An initial task should be the identification of the components that interact to form the mixed system.

Procedures used in the analysis of the crop and livestock components within a mixed system are similar to those followed in crop-based and livestock-based systems, except that the analyses must systematically include crop/livestock interaction criteria in the selection of potential modifications. For example, the agronomist analyzing the crop component must be continually aware of the nutrition requirement of the animal components, and the animal specialist must be aware of the feed-producing limits of the system. Many mixed systems also include a feed storage component. In areas where dry-season feed availability is a constraint, this component is obviously extremely important.

The advantages from emphasizing on-farm activities (as opposed to field station research) are: (1) the researcher is forced to work under the same constraints as the farmer and is, therefore, more likely to direct the research towards "real problems" as opposed to problems associated with the researcher's technical biases; (2) the cumulative experience of generations of farmers that lived and survived in the area is available if the farmer participates in the design of alternatives; and (3) the evaluation of potential technology and technology transfer is a continuous process as neighbors begin to copy successful technology.

Regional environmental and socioeconomic studies and farm management studies can be conducted concurrently with the on-farm-production-system studies. The results from these studies and the field-station screening of potential technology generated by international research centers or other research groups can be combined and potential alternatives can be identified. The evaluation of these alternatives within the environmental limits of the target area is an important step, not only to

screen and reject less promising alternatives, but also to identify the environmental limits of the potential alternatives.

If the new technology to be generated is conceptualized as a nonflexible "recipe," the environmental limits of the recommendation are likely to be very site-specific. However, if the alternative can be viewed as a flexible package with management options, its recommendation domain can be considerably enlarged. Guidance for the selection of these options should include tests of the alternatives along a gradient of the environmental factor(s) hypothesized as management determinants. This concept of environmental determinants, developed at IRRI (Zandstra, 1979), has not been fully tested, but it may be a way to reduce the costs of FSR, since the recommendation produced would be valid for larger areas.

In many countries the transfer of technology from the researcher to the farmer is a crucial step. An even more crucial step is the analysis and feedback of information from the farmer to the research system. The enhancement of this process is, without a doubt, one of the key contributions of the FSR approach.

Technology transfer can also make use of mass media. Among the unanswered transfer questions is how the complex information package produced by FSR programs can be best transferred to farmers other than through the built-in demonstration effect of the system. This question would seem to be even more critical for mixed-farms systems as compared to crop-based or livestock-based systems.

Institutional requirements. National planning, research, and development institutions are an absolute requisite for viable national agricultural development programs. These institutions and their programs provide the structure for evaluating needs and implementing programs, and for making continuing adjustments in these programs to meet changing circumstances and needs. There must be trained personnel within these institutions and programs. Thus, two key elements of a national development effort are (1) planning, research, and development institutions, and (2) the trained personnel to staff these programs.

In every instance, national governments must have national agriculture planning offices and USAID should give priority attention to means for strengthening national planning capability. This planning cannot be performed through disconnected and separate planning groups but must be an integrated effort addressing the country's agriculture as a whole, and based on local organizational hierarchy.

So-called "institutes of agricultural research" are fundamental to agricultural development. Their research efforts should be appropriately designed to meet the technical needs of the country's agriculture. A systems approach should be used in the development of these programs as described previously. First consideration must be given to applied and adaptive research as necessary to advance and improve agriculture.

Where technological gaps exist and/or where needs are anticipated in the future, national programs should take maximal advantage of technology generated by international and regional centers and should rigorously avoid duplication of these efforts. Many countries will, however, be confronted with the need to generate or adapt technology. It is anticipated that much of the needed livestock research will be within a farming-systems framework and will generally not be isolated disciplinary research. This would include research and development of year-round feeding systems, field testing and validation of improved pasture systems, selection and improvement of locally available and adapted stocks such as Barbados Blackbelly sheep and N'Dama cattle, and field testing and validation of improved methods of control of diseases and pests of livestock. Although breeding, pathology, and entomology research is often needed for crops at the country level, livestock research needs are generally fewer because of (1) the smaller differential effects of environmental variations on livestock as compared to crops, and (2) of the greater extrapolation of livestock production technology from one area to another than is possible with crops. In most instances, the greatest need is for applied and adaptive research to field test and validate improved production systems and practices.

National planning offices, national agricultural research institutes, agricultural banks, natural resource institutes, and other similar institutions should be linked directly. There should be cross membership of executive officers in the policy-making bodies of each institution.

Bilateral development projects. From the outset, USAID and its predecessors have placed heavy emphasis on bilateral efforts with host countries to assist in national agricultural development programs. Although some projects could be judged as failures and others of only nominal value, most have had a very beneficial impact on country development, particularly as related to national planning, institutional development, the training of personnel, and the development of country-level, commodity-production programs. The bilateral effort is highly responsive to priority country needs and has great value.

However, there are major shortcomings: projects are often too short-lived to achieve stated objectives; planning is often faulty because of lack of mission personnel and/or expertise and inadequate involvement of the host country, advanced training of host country personnel to staff these programs is often neglected; and adequate attention is not given to the development of an institutional planning base to support sustained progr activities.

Bilateral programs have a special place in USAID development strategy. Political and cultural ties are a country-to-country relationship. USAID technical assistance is basically one country helping another. This fact is often overlooked in the evaluation of projects and the analysis of shortcomings.

Bilateral efforts should continue and be strengthened. USAID should provide the "person power" to manage these programs and should rigorously seek those institutions most qualified to implement these projects. Host countries should assume increasing responsibility in the planning and management of bilateral projects.

These efforts should be performed in the production system, farming-systems mode. As in the past, emphasis should be placed on the application and adaptation of technology in farming-systems and commodity-oriented approaches and the strengthening of country planning, research, and extension capabilities.

Regional Programs

Regional organizations serve to network the regional activities of common interest. Examples are the Southeast Asia Research College for Agriculture (SEARCA), the Animal Production and Health Commission for Asia (APHCA), the Instituto Interamericano de Investigaciones Agricolas (IICA), the Centro Agronomico Tropical de Investigacion y Ensenanza (CATIE), the Caribbean Research Development Institute (CARDI), and the Club du Sahel (CILSS) in Africa. Examples of defunct regional organizations are the East African Veterinary Research Organization (EAVRO), and the East African Food Research Organization (EAFRO).

Internally, USAID has regional development programs including the Regional Organization for Central America and Panama (ROCAP) and the Regional Economic Development Services Office (REDSO) (West and East) in Africa.

These regional centers/programs are not designed to supplant either national programs or international agricultural research centers. They are designed to coordinate activities of mutual interest and to implement integrated research/development programs for participating countries. As such, primary emphasis should be placed on the networking of systems-oriented activities that embrace field surveys and data analyses and field testing and validation of farming systems in important ecosystems in participating countries. In some instances, these regional organizations/efforts would engage in problem-oriented research not addressed by either national institutions or international agricultural research centers. An example is field research on family farm, dairy-production systems in CATIE.

There are various situations where regional research centers can play a unique role. Many countries are too small and resource-poor to maintain research and development institutions capable of addressing a diverse set of problems. A number of countries in this situation can pool their resources to create an institution to serve all of the member countries.

International Agricultural Research Centers

The International Agricultural Research Centers (IARCs) were established to develop improved technology that will increase agricultural production in developing countries. These IARCs are supported by a consortium of public and private donors which operates under the aegis of the Consultative Group for International Agricultural Research (CGIAR).

There are now thirteen research centers in this network. Of these, only the International Livestock Research on Animal Diseases (ILRAD) and the International Livestock Center for Africa (ILCA), both located in Africa, have programs devoted exclusively to livestock production. The Centro Internacional de Agricultura Tropical (CIAT) has a tropical pasture program which focuses on the development of improved pasture systems for cattle in the low fertility grasslands of the humid and subhumid tropics. The International Crops Research Institute for the Semiarid Tropics (ICRISAT) is engaged in animal-traction-power investigations as related to their cropping systems investigations in semiarid areas. The International Center for Agricultural Research in the Dry Areas (ICARDA) conducts crop-livestock and forage research within their farming-systems program for the rain-fed areas of North Africa and West Asia.

The IARCs complement national and regional programs and should not compete with them, since the IARCs mandate is to create technology that is not likely to be produced by national, regional, or other research programs. Their mandate, to fill critical technological gaps impeding agricultural development, is vital to the development process. Only one center, the International Service to National Agricultural Research (ISNAR) departs from the technology generation mode. ISNAR provides technical and planning assistance to national agricultural research systems to assist them in the development of their national research programs and to promote the application of new technology emanating from the IARCs and other sources.

All centers engaged in livestock-related investigations should limit their activities to developing new technology that will result in major, if not quantum, increases in livestock productivity. Not only should the livestock activities between these centers be linked, but there should also be a linkage with crops research centers as crop/pasture/livestock interactions are investigated.

Specifically, ILRAD should focus on developing immunological mechanisms for the control of trypanosomiasis and theileriosis, and utilize these investigations to advance the state of the art on the control of babesiosis and anaplasmosis. Whereas trypanosomiasis and theileriosis are essentially African diseases while babesiosis and anaplasmosis are found worldwide, the former are of greater significance because they are absolute constraints to animal production in Africa, i.e., trypanosomiasis in all of tropical Africa, theileriosis in East Africa. Both are killer diseases, with the exception of native trypanotolerant breeds of

some cattle, sheep, and goats. In contrast, animals born and raised where babesiosis and anaplasmosis are endemic are infected at an early age and are subsequently reinfected periodically, enabling them to maintain protective antibodies against these diseases.

ILRAD's efforts should be directly linked with ILCA and other research centers in the development of comprehensive approaches for the control of trypanosomiasis using immunological methods, trypanotolerant animals/genes, control of tsetse flies, and prophylactics. The linkage between ILRAD and ILCA should focus on: the immunological mechanisms and markers of trypanotolerance and the means whereby these might be used in the development of vaccines; screening of animal populations for trypanotolerance; and genetic techniques to incorporate the trypanotolerant traits in susceptible animals.

In addition, ILRAD should maintain close liaison with the programs of other research institutions in developed and developing countries engaged in integrated pest-management programs--specifically control of ticks and tsetse flies.

ILCA's efforts thus far have focused heavily on systems-oriented studies, i.e., monitoring of livestock development projects, crop/livestock systems in highlands regions, grazing systems in arid land regions, and small-ruminant-production systems in humid tropical regions. Problem-oriented research has been principally related to trypanotolerance in cattle, sheep, and goats. As previously mentioned, ILCA and ILRAD are now collaborating in trypanotolerance research and this work should be expanded to provide one of ILCA's principal research thrusts.

Now that ILCA has assembled comprehensive data on livestock production systems in Africa, they can identify appropriate research thrusts. It is suggested that in addition to trypanotolerance, range management and pasture improvement should be a second principal research area. Range management and utilization are primary factors in livestock production in Africa and merit attention beyond that provided by national programs. Attention to improved pastures/cultivated forages should be limited to protein and energy-bank pastures/forages for supplemental use in the dry season. In the latter, a working linkage should be established with CIAT, utilizing technology and germ plasm emanating from their research on improved grass/forage legume pasture systems in low-fertility, humid-tropical areas in Latin America. Finally, it is suggested that survey/monitoring activities should be phased down and that national institutions should assume principal responsibility for systems studies, with ILCA providing only backstopping technical assistance.

CIAT's tropical pasture program is sharply focused on the development of improved germ plasm and establishment/management systems for mixed grass/legume pastures in the humid and subhumid tropics. This program, although pasture-systems oriented, lacks the resources to adequately field test and validate their pasture technology at the field level in

improved livestock production systems. This improved-pasture technology should be tested in systems where necessary inputs are available to achieve maximum profitability at acceptable levels of investment and risk, and in a livestock production system where optimum, rather than minimum, benefits are derived. These are activities that need not be conducted directly by CIAT, or as part of their core program, but probably should be conducted by a collaborating agency, i.e., national, regional, or otherwise.

As previously mentioned, CIAT should maintain a close working linkage with ILCA, and also with IITA.

ICRISAT is the only center with an on-going research on animal traction power in crop/livestock systems. This research has yielded highly relevant information on the design and use of implements and hitches in animal-powered systems. This research should be substantially expanded to involve other centers--IARCs and other research and development centers. Emphasis should be on humid and subhumid areas where animal power is and will continue to be of major importance, e.g., South Asia.

ICARDA should continue research on crop-livestock systems and improved forage crops in their farming-systems program.

ISNAR's role should be to assist host countries in the planning, organization, and management of their livestock research programs, particularly as related to mixed crop/livestock and grazing systems. As an institution that is not identified with any particular commodity or with either crops or livestock, it can help in the design of multidisciplinary programs and in the design of institutions able to implement them.

Training in the IARCs will normally be highly research oriented, i.e., in-service training, research workshops, and carried out largely within or as part of research projects.

In summary, the IARCs are a highly important element in a worldwide agricultural development strategy. Their mandate is clear, i.e., to produce new technology that is vitally needed to increase food production; technology that is not otherwise available or likely to be forthcoming from national or other institutions.

A systems approach should be used in determining production constraints and potentials, research needs and priorities, and in designing research programs to produce technology that will fit within commercial enterprises, whether family farm or otherwise. Research should be sharply problem and commodity oriented. IARC's must have close two-way communication and working linkages with national programs.

United States Institutions

No attempt is made in this paper to provide an in-depth examination of the current involvement of U.S. institutions in livestock production

programs in developing countries nor to project future involvement of these institutions in technical assistance programs in developing countries. Rather, attention is called to the types and nature of U.S. institutional involvement.

Universities. Probably the most important contribution of U.S. universitites has been in providing both graduate and undergraduate training for agricultural specialists from overseas who have/will assume important positions within institutional programs in their own countries. This role, and this contribution to agricultural development worldwide, is too often badly underestimated. Trained personnel have probably been the most important product of our technical assistance programs.

Also, universities long have been integrally involved in the development of academic institutions and national agricultural research, education, and extension institutes in developing countries. Since 1978, U.S. universities and subcontractors have participated in Title XII programs, including collaborative research support programs and country development projects. These Title XII programs are designed to facilitate the involvement of U.S. universities on a sustained basis in both collaborative research efforts and technical assistance projects.

Federal institutions. The United States Department of Agriculture (USDA) has provided especially important services to USAID in livestock technical assistance programs. These services have been provided through a wide range of Participating Agency Service Agreements (PASA) and Resources Support Service Agreements (RSSA). These mechanisms should continue to be utilized and exploited in USAID's livestock technical assistance programs. Likewise, the services of other federal agencies (e.g., Department of Interior, National Oceanic and Atmospheric Administration) have made valuable contributions and should continue.

Private sector. Included in the private sector are private foundations, public nonprofit institutions, and private firms.

Programs of private foundations have emphasized efforts to probe new frontiers and to set the stage for the development of programs with longer term horizons. This should continue to be their emphasis so as to complement and augment national program efforts that must give first priority to immediate needs.

The activities of public nonprofit organizations tend to be intermediate between private foundations and the private commercial sector; they make investments in project development as do private foundations and they complete specific projects on a contract basis as do private firms. In most instances, public nonprofit institutions make investment at some stage(s) of the project cycle. This enables public nonprofit institutions to obtain greater leveraging of core funds in complementing and attracting outside grants and contracts.

The Private Voluntary Organizations (PVO) are a special type of public nonprofit organization. In addition to providing emergency assistance to needy persons, many provide major support for community and field-level development projects. USAID has recognized the development role of PVOs and the opportunity to enhance the output of PVO projects by providing critically needed supplementary support. This relationship between USAID and PVOs should be continued and exploited.

Increased emphasis is being placed on the involvement of the commercial sector in the agricultural development process. In addition to being contractors in the execution of specific projects for developing countries and development agencies, there are increasing needs and great potential for their involvement in individual and collaborative business ventures in developing countries. Since the private sector is highly efficiency- and productivity-oriented, their inputs and involvement are vital in assisting countries to increase and/or become self-sufficient in food production.

BIBLIOGRAPHY

APHCA. 1977. International Workshop on Inventory of Livestock Resources in Asia. Animal Production and Health Commission for Asia, the Far East and the Southwest Pacific. Manila, Philippines.

Brumby, P. 1979. Milk production in India. Paper presented to British Society of Animal Production Conference on Intensive Animal Production in Developing Countries. Harrogate, November 1979.

Byerly, T. C. 1977. Ruminant livestock research and development. Science 195:450-456.

Byington, E. K. and R. D. Child. 1981. Forages from the world's forested land for ruminant animal production. In: R. D. Child and E. K. Byington (Eds.) Potential of the World's Forages for Ruminant Animal Production, 2nd edition. pp 93-107. Winrock International Livestock Research and Training Center, Morrilton, AR.

CENTO. 1971. Development of Feed Resources and Improvement of Animal Feeding Methods in the CENTO Region Countries. Tropical Products Institute, London.

Chandler, T. and D. Spurgeon (Eds.) 1979. International Cooperation in Agroforestry. Proceedings of an International Council for Research in Agroforestry. Nairobi, Kenya.

Chang, H. [illegible] 1981. Problems and challenge of agriculture in a rapidly developing economy--the Taiwan experience. Food and Fertilizer Technology Center Extension Bulletin No. 160. Taipei, Taiwan.

Child, R. D. and E. K. Byington. 1980. Southern Forest Range and Pasture Resources. Winrock International Livestock Research and Training Center, Morrilton, AR.

CIAT. 1973. Annual Report. Centro Internacional de Agricultura Tropical, Cali, Colombia.

CIAT. 1974. Annual Report. Centro Internacional de Agricultura Tropical, Cali, Colombia.

CIAT. 1974. Proceedings of a seminar: Potential to increase beef production in Tropical America. Centro Internacional de Agricultura Tropical, Cali, Colombia.

CIAT. 1980. Annual Report. Centro Internacional de Agricultura Tropical, Cali, Colombia.

Colombia, Ministerio de Agricultura. 1974. Programas Ganaderos 1974-75. Bogota.

FAO. 1978. FAO Trade Yearbook. Volume 32. Rome.

FAO. 1979. FAO Production Yearbook. Volume 33. Rome.

FAO/UN. 1974. Assessment of the world food situation present and future. United Nations World Food Conference, Rome.

Ferguson, D. S. and J. Sleeper. 1976. A Conceptual Framework for the Evaluation of Livestock Production Development Projects and Programs in Sub-Saharan West Africa. U.S. Agency for International Development, Washington, D.C.

Fitzhugh, H. A. and J. De Boer. 1981. Physical and economic constraints to intensive animal production in developing countries. Society of Animal Production. Occasional Publication No. 4, Surrey, England.

Goldmark, S. 1980. Taking Stock: A Case Study of a Cattle Project in Rural El Salvador. Technoserve, Inc., Norwalk, CT.

Hart, R. D. 1979. One farm system in Honduras: A case study in farm system research. Paper presented at Farming System Research and Development Workshop. Consortium for International Development. Fort Collins, CO.

Harwood, R. R. 1979. Small Farm Development; Understanding and Improving Farming Systems in the Humid Tropics. Westview Press, Boulder, CO.

Haseyama, T. 1976. Demand for livestock and livestock products in Asian countries. In: Livestock Production in Asian Context of Agricultural Diversification. Asian Productivity Organization, Tokyo.

Hildebrand, P. E. 1978. Motivating small farmers to accept change. Rockefeller Foundation Conference. Bellagio, Italy.

Hodgson, H. J. 1976. Forages, Ruminant Livestock, and Food. Winrock International Livestock Research and Training Center, Morrilton, AR.

ILCA. 1979. Small Ruminant Production in the Humid Tropics. International Livestock Centre for Africa, Addis Ababa, Ethiopia.

Lagemann, J. 1977. Traditional African Farming Systems in Eastern Nigeria: An Analysis of Reaction to Increasing Population Pressure. Afrikastudien No. 98, IFO - Institution Munich: Weltforum Verlag.

Le Houerou, H. N. and N. S. Raun. 1980. Livestock response to climate change. In: Climate Change and Agricultural Production in Non-industrialized Countries. Department of Energy/American Association for the Advancement of Science.

Makhijani, A. and A. Poole. 1975. Energy and Agriculture in the Third World. Ballinger Publishing Co., Cambridge, MA.

McDowell, R. E. 1974. Animal production in world food supplies. Cornell International Agriculture Mimeograph 45. Dept. of Animal Science, Cornell Univ., Ithaca, N.Y.

McDowell, R. E. 1977. Ruminant Products: More than Meat and Milk. Winrock International Livestock Research and Training Center, Morrilton, AR.

McDowell, R. E. and P. E. Hildebrand. 1980. Integrated crop and animal production: making the most of resources available to small farms in developing countries. Rockefeller Foundation Conference. Bellagio, Italy.

National Academy of Sciences. 1977. Supporting Papers: World Food and Nutrition Study, Volume V. Washington, D.C.

Norman, D. W. 1978. Farming systems research to improve the livelihood of small farmers. American Journal of Agriculture Economics 60(5): 813-818.

Pino, J. A. and A. Martinez. 1981. The contribution of livestock to the world protein supply. In: R. C. Woods (Ed.) Future Dimensions of World Food and Population. pp 183-238. Westview Press, Boulder, CO.

Ramaswamy, N. 1981. Report on draft animal power as a source of renewable energy. Prepared for FAO, Rome.

Raun, N. S. 1976. Beef cattle production practices in the lowland American tropics. In: World Animal Review, No. 19.

Raun, N. S. 1981. Livestock as a buffer against climate. In: Food and Climate Review, 1980-81. Aspen Institute for Humanistic Studies, Boulder, CO.

Raven, P. H. 1981. Raven warns of rapid tropical deforestation. Bioscience 31(9):633.

Rivas Rios, L. 1974. Some aspects of the cattle industry on the north coast plains of Colombia. Technical Bulletin No. 3. Centro Internacional de Agricultura Tropical, Cali, Colombia.

Rockefeller Foundation. 1975. Working Papers: The Role of Animals in the World Food Situation. Rockefeller Foundation, New York.

Sanchez, Pedro. 1981. A Legume-based Pasture Production Strategy for Acid Infertile Soils of Tropical America. U.S. Agency for International Development, Washington, D.C.

Sandford, S. 1982. Institutional and economic issues in the development of goat and goat product markets. Third International Conference on Goat Production and Disease. Tucson, AZ. In press.

Scoville, O. J. 1976. Improving ruminant livestock production on small holdings. Agricultural Development Council, Inc., New York, NY.

Scoville, O. J. and M. E. Sarhan. 1978. Objectives and Constraints of Ruminant Livestock Production. Winrock International Livestock Research and Training Center, Morrilton, AR.

Shapiro, K. H. 1979. Livestock production and marketing in the entente states: summary report. The Center for Research on Economic Development, Univ. of Michigan, Ann Arbor.

Sprague, H. B. 1981. The Status and Challenge of Dryland Agriculture in Developing Countries of the Tropics and Subtropics. U.S. Agency for International Development, Washington, D.C.

Szczepanik, E. F. 1976. Recent changes in world livestock/feed price ratios. Monthly Bulletin of Agricultural Economics and Statistics 25:11.

USAID. 1976. Small farmer sub-sector assessment and constraints analysis. USAID Paraguay.

USAID. 1977. An assessment of the agricultural sector in Costa Rica. USAID Mission to Costa Rica. Washington, D.C.

USAID. 1978. Agricultural Development Policy Paper. Washington, D.C.

USAID. 1979. The sociology of pastoralism and African livestock projects. USAID Program Evaluation Discussion Paper No. 6. USAID, Washington, D.C.

USAID. 1980. Sahelian livestock industry status and development strategy. Sahel Development Program. Washington, D.C.

USAID. 1980. The workshop on pastoralism and African livestock development. USAID Program Evaluation Report No. 4. Washington, D.C.

USAID. 1981. A strategy for focusing on AID's anti-hunger efforts. Technical Program Committee for Agriculture. Washington, D.C.

Von Pischke, J. D. and D. W. Adams. 1980. Fungibility and the design and evaluation of agricultural credit projects. American Journal of Agricultural Economics 62(4):719-727.

Wheeler, R. O., G. L. Cramer, K. B. Young, and E. Ospina. 1981. The World Livestock Product, Feedstuff, and Food Grain System. Winrock International Livestock Research and Training Center, Morrilton, AR.

Whyte, W. F. 1981. Participatory Approaches to Agricultural Research and Development. Cornell Univ. Center for International Studies, Ithaca, New York.

Winrock International. 1976. The Role of Sheep and Goats in Agricultural Development. Winrock International Livestock Research and Training Center, Morrilton, AR.

Winrock International. 1978. The Role of Ruminants in Support of Man. Winrock International Livestock Research and Training Center, Morrilton, AR.

World Atlas of Agriculture. 1969. Instituto Geografico de Agostini, Novara, Italy.

World Bank. 1981. Agricultural Research; Sector Policy Paper. World Bank, Washington, D.C.

Zandstra, H. G. 1979. A cropping systems research methodology for agricultural development projects. Presented at a seminar at the World Bank, Washington, D.C.

APPENDIX I.

Cattle, Sheep, Goat, Swine, and Buffalo Populations in the World

Table I-1. Cattle, Sheep and Goat Populations, 1979

Region	Cattle		Sheep		Goats	
	No. head 1/	% annual change 2/	No. head 1/	% annual change 2/	No. head 1/	% annual change 2/
Industrialized						
North America	123,192	-.1	12,654	-4.4	1,386	-5.3
Western Europe	95,064	.6	87,469	.4	9,842	.1
USSR, East Europe	153,558	1.9	186,733	.5	7,242	-1.1
Oceania	36,203	1.6	197,264	-1.8	148	-2.1
Others 3/	17,600	2.0	31,711	-1.3	5,510	-.8
Total	425,617	.9	515,832	-.8	24,128	-1.0
Less Industrialized						
Middle & South America	267,304	2.3	116,585	-.7	29,053	-.2
Central & Southern Africa	148,882	1.3	105,235	1.4	126,657	1.2
North Africa & Near East	35,854	1.9	140,772	1.3	62,250	.1
South Asia	241,242	.6	91,671	1.7	115,766	2.0
Centrally Planned Far East	68,985	.2	109,891	2.3	77,333	1.7
Open Economies Far East	24,125	.2	3,969	1.5	10,734	2.0
Total	786,392	1.3	568,123	1.1	421,793	1.3
World Total	1,212,009	1.2	1,083,954	.1	445,919	1.1

Source: FAO Production Yearbook, 1979.

1/ Total inventory, thousands.
2/ Annual change between 1970-1979.
3/ South Africa, Japan, Israel.

Table I-2. Swine and Buffalo Populations, 1979

Region	Swine		Buffalo	
	No. head 1/	% Annual change 2/	No. head 1/	% Annual change 2/
Industrialized				
North America	68,126	0.0	0	0
Western Europe	109,253	2.6	86	3
USSR, East Europe	136,283	3.8	733	-.7
Oceania 3/	2,770	-0.8	1	11.1
Others 3/	11,084	4.9	0	0
Total	327,516	2.4	820	-.4
Less Industrialized				
Middle & South America	74,369	2.1	318	17
Central & Southern Africa	7,564	3.9	0	0
North Africa & Near East	312	5.8	3,790	-.3
South Asia	10,454	6.0	14,723	-.4
Centrally Planned Far East	316,941	2.6	32,421	.2
Open Economies Far East 4/	24,520	1.1	78,485	1.3
Others 4/	1,783	3.6	0	0
Total	435,945	2.5	129,737	.8
World Total	763,461	2.5	130,557	.8

Source: FAO Production Yearbook, 1979.

1/ Total inventory, thousands.
2/ Annual change between 1970-1979.
3/ South Africa, Japan, Israel.
4/ Oceania other than Australia and New Zealand.

APPENDIX II.

People and Land Use in AID Countries
Tables A-1, A-2, A-3

TABLE A-1 for AFRICA, LATIN AMERICA, NEAR EAST AND ASIA
1979 Population in Relation to Agriculture in LDCs

COUNTRY	TOTAL POPULATION (000)	TOTAL ENGAGED IN AGRICULTURE (000)	ECONOMICALLY ACTIVE TOTAL (000)	ECONOMICALLY ACTIVE IN AGRICULTURE (000)	PER CENT IN AGRICULTURE
			AFRICA		
BOTSWANA	798	646	376	304	81.0
CAMEROON	8,248	6,691	3,851	3,124	81.1
ETHIOPIA	31,773	25,320	13,153	10,482	79.7
GHANA	11,317	5,884	4,191	2,158	51.9
KENYA	15,780	12,318	5,998	4,682	78.1
LESOTHO	1,309	1,105	690	583	84.4
LIBERIA	1,802	1,268	667	469	70.3
MALI	6,465	5,653	3,488	3,050	87.4
MAURITANIA	1,588	1,323	486	405	83.3
NIGER	5,150	4,556	1,604	1,419	88.5
SENEGAL	5,518	4,135	2,298	1,722	74.9
SOMALIA	3,542	2,852	1,377	1,109	80.5
SUDAN	17,865	13,828	5,556	4,301	77.4
SWAZILAND	540	397	247	182	73.6
TANZANIA	17,382	14,179	7,132	5,818	81.6
UPPER VOLTA	6,728	5,519	3,586	2,941	82.0
ZAIRE	27,519	20,582	11,689	8,743	74.8
BENIN	3,424	1,585	1,581	732	46.3
BURUNDI	4,383	3,658	2,107	1,759	83.5
GAMBIA	587	460	288	225	78.4
GUINEA	4,887	3,941	2,193	1,769	80.6
MALAWI	5,963	5,029	2,671	2,253	84.3
RWANDA	4,649	4,183	2,438	2,193	90.0
SIERRA LEONE	3,381	2,224	1,272	837	65.8
TOGO	2,618	1,793	1,079	739	68.5
ZAMBIA	5,465	3,678	1,997	1,344	67.3
			LATIN AMERICA		
BOLIVIA	5,430	2,744	1,780	899	50.5
CHILE	10,919	2,118	3,592	680	19.4
COLOMBIA	26,253	7,425	7,810	2,209	28.3
COSTA RICA	2,162	774	721	258	35.8
DOMINICAN REP.	5,800	3,285	1,527	865	56.6
ECUADOR	7,779	3,508	2,470	1,114	45.1
EL SALVADOR	4,663	2,423	1,454	741	52.0
GUATEMALA	7,048	3,912	2,147	1,192	55.5
GUYANA	865	194	280	63	22.4
HAITI	5,677	3,828	2,861	1,929	67.4
HONDURAS	3,565	2,245	1,049	661	63.0
JAMAICA	2,162	464	733	157	21.5
NICARAGUA	2,649	1,131	787	344	42.7
PANAMA	1,899	668	637	224	35.2
PARAGUAY	2,979	1,468	958	472	49.3
PERU	17,291	6,975	5,092	1,939	40.3
URUGUAY	2,905	355	1,119	137	12.2
			NEAR EAST		
EGYPT	40,926	20,788	11,513	5,848	50.8
JORDAN	3,085	820	736	196	26.6
LEBANON	3,086	333	801	86	10.8
MOROCCO	19,642	10,157	5,170	2,673	51.7
SYRIA	8,368	4,004	2,147	1,027	47.8
TUNISIA	6,201	2,568	1,490	617	41.4
N. YEMEN	5,785	4,363	1,605	1,211	75.4
			ASIA		
BANGLADESH	86,062	72,398	29,392	24,725	84.1
BURMA	34,434	18,084	13,829	7,262	52.5
INDIA	678,255	434,047	261,087	167,046	64.0
INDONESIA	148,470	88,625	50,687	30,256	59.7
KOREA REP.	37,313	14,887	14,161	5,650	39.9
NEPAL	13,938	12,921	6,647	6,162	92.7
PAKISTAN	79,838	43,063	21,731	11,721	53.9
PHILIPPINES	49,493	23,027	17,137	8,016	46.5
SRI LANKA	14,608	7,809	5,054	2,702	53.5
THAILAND	46,347	35,152	20,840	15,806	75.8

TABLE 1-2 for AFRICA, LATIN AMERICA, NEAR EAST AND ASIA
1979 Land Use, in Relation to Ruminant Livestock

COUNTRY	ARABLE LAND (000 Ha.)	PERMANENT GRAZING LAND (000 Ha.)	RATIO OF GRAZING TO ARABLE LANDS	RUMINANT LIVESTOCK IN ANIMAL UNITS*
		AFRICA		
BOTSWANA	1,360	44,000	32.4 to 1	3,630
CAMEROON	6,800	8,300	1.2 to 1	3,813
ETHIOPIA	13,000	64,500	4.9 to 1	35,903
GHANA	1,070	10,700	10.0 to 1	1,660
KENYA	1,790	3,770	2.1 to 1	13,270
LESOTHO	310	2,000	6.5 to 1	956
LIBERIA	126	240	1.9 to 1	114
MALI	2,047	30,000	14.7 to 1	7,240
MAURITANIA	192	39,250	204.4 to 1	4,730
NIGER	3,112	9,300	3.0 to 1	5,435
SENEGAL	2,400	5,700	2.4 to 1	3,391
SOMALIA	1,050	28,850	27.5 to 1	19,800
SUDAN	7,470	24,000	3.2 to 1	28,180
SWAZILAND	150	1,250	8.3 to 1	710
TANZANIA	4,110	44,680	10.9 to 1	16,840
UPPER VOLTA	5,620	13,755	2.4 to 1	3,610
ZAIRE	5,650	24,803	4.4 to 1	1,856
BENIN	565	442	0.8 to 1	1,180
BURUNDI	1,090	435	0.4 to 1	1,020
GAMBIA	265	330	1.2 to 1	317
GUINEA	4,100	3,000	0.7 to 1	1,865
MALAWI	2,280	1,840	0.8 to 1	990
RWANDA	710	500	0.7 to 1	849
SIERRA LEONE	420	2,204	5.2 to 1	317
TOGO	1,355	200	0.1 to 1	567
ZAMBIA	5,050	30,000	5.9 to 1	1,878
		LATIN AMERICA		
BOLIVIA	3,240	27,100	8.4 to 1	6,330
CHILE	5,630	11,850	2.1 to 1	4,917
COLOMBIA	4,020	17,600	4.4 to 1	26,735
COSTA RICA	283	1,558	5.5 to 1	2,072
DOMINICAN REP.	880	1,490	1.7 to 1	2,235
ECUADOR	1,750	2,559	1.5 to 1	3,037
EL SALVADOR	515	610	1.2 to 1	1,371
GUATEMALA	1,450	880	0.6 to 1	1,710
GUYANA	364	999	2.7 to [illegible]	316
HAITI	545	515	0.9 to 1	1,277
HONDURAS	1,560	2,000	1.3 to 1	1,803
JAMAICA	205	210	1.0 to 1	365
NICARAGUA	1,335	3,384	2.5 to 1	2,848
PANAMA	451	1,161	2.6 to 1	1,424
PARAGUAY	980	15,100	15.4 to 1	5,313
PERU	3,100	27,120	8.7 to 1	7,482
URUGUAY	1,850	13,910	7.5 to 1	13,747
		NEAR EAST		
EGYPT	2,700	0	0.0 to 1	5,106
JORDAN	1,180	100	0.1 to 1	304
LEBANON	240	10	0.0 to 1	202
MOROCCO	7,418	12,500	1.7 to 1	7,920
SYRIA	5,150	8,421	1.6 to 1	2,456
TUNISIA	3,255	3,250	1.0 to 1	2,272
N. YEMEN	1,520	7,000	4.6 to 1	3,462
		ASIA		
BANGLADESH	8,915	600	0.1 to 1	35,682
BURMA	9,558	361	0.0 to 1	9,468
INDIA	164,500	12,450	0.1 to 1	267,200
INDONESIA	14,168	12,046	0.8 to 1	11,097
KOREA REP.	2,079	41	0.0 to 1	1,754
NEPAL	2,305	1,700	0.7 to 1	11,968
PAKISTAN	19,715	5,000	0.3 to 1	38,356
PHILIPPINES	5,250	980	0.2 to 1	5,220
SRI LANKA	1,023	439	0.4 to 1	2,564
THAILAND	15,800	308	0.0 to 1	10,368

*Animal Units

1 Cow or Buffalo = 1 A.U.
5 Sheep or 5 goats = 1 A.U.
1 Camel = 2 A.U.

TABLE A-3 1979 RELATIVE ABUNDANCE OF RUMINANT LIVESTOCK PER AGRICULTURAL PRODUCTION UNIT

COUNTRY	ECONOMICALLY ACTIVE AGRICULTURAL HUMAN POPULATION (000)	RUMINANT ANIMAL UNITS (1) (000)	ANIMAL UNITS PER AGRICULTURAL UNIT(S)	PREDOMINENT TYPE OF AGRICULTURE
		AFRICA		
BOTSWANA	304	3,630	11.9	Pastoral
CAMEROON	3,124	3,813	1.2	Dual
ETHIOPIA	10,482	35,903	3.4	Dual
GHANA	2,158	1,660	0.8	Crops
KENYA	4,682	13,270	2.8	Dual
LESOTHO	583	956	1.6	Dual
LIBERIA	469	114	0.2	Crops
MALI	3,050	7,240	2.4	Dual
MAURITANIA	405	4,730	11.7	Pastoral
NIGER	1,419	5,435	3.8	Dual
SENEGAL	1,722	3,391	2.0	Dual
SOMALIA	1,109	19,800	17.9	Pastoral
SUDAN	4,301	28,180	6.6	Pastoral
SWAZILAND	182	710	3.9	Dual
TANZANIA	5,818	16,840	2.9	Dual
UPPER VOLTA	2,941	3,610	1.2	Dual
ZAIRE	8,743	1,856	0.2	Crops
BENIN	732	1,180	1.6	Dual
BURUNDI	1,759	1,020	0.6	Dual
GAMBIA	225	317	1.4	Dual
GUINEA	1,769	1,865	1.1	Dual
MALAWI	2,253	990	0.4	Crops
RWANDA	2,193	849	0.4	Crops
SIERRA LEONE	837	317	0.4	Crops
TOGO	739	567	0.8	Crops
ZAMBIA	1,344	1,878	1.4	Dual
		LATIN AMERICA		
BOLIVIA	899	6,330	7.0	Dual
CHILE	680	4,917	7.2	Dual
COLOMBIA	2,209	26,735	12.1	Pastoral
COSTA RICA	258	2,072	8.0	Pastoral
DOMINICAN REP.	865	2,235	2.6	Dual
ECUADOR	1,114	3,037	2.7	Dual
EL SALVADOR	741	1,371	1.9	Dual
GUATEMALA	1,192	1,710	1.4	Dual
GUYANA	63	316	5.0	Dual
HAITI	1,929	1,277	0.7	Crops
HONDURAS	661	1,803	2.7	Dual
JAMAICA	157	365	2.3	Dual
NICARAGUA	344	2,848	8.3	Pastoral
PANAMA	224	1,424	6.4	Dual
PARAGUAY	472	5,313	11.2	Pastoral
PERU	1,939	7,482	3.9	Dual
URUGUAY	137	13,747	100.3	Pastoral
		NEAR EAST		
EGYPT	5,848	5,106	0.9	Crops
JORDAN	196	304	1.6	Dual
LEBANON	86	202	2.3	Dual
MOROCCO	2,673	7,920	3.0	Dual
SYRIA	1,027	2,456	2.4	Dual
TUNISIA	617	2,272	3.7	Dual
N. YEMEN	1,211	3,462	2.9	Dual
		ASIA		
BANGLADESH	24,723	35,682	1.4	Dual
BURMA	7,262	9,468	1.3	Dual
INDIA	167,046	267,200	1.6	Dual
INDONESIA	30,256	11,097	0.4	Crops
KOREA REP.	5,650	1,697	0.3	Crops
NEPAL	6,162	11,968	1.9	Dual
PAKISTAN	11,721	38,355	3.3	Dual
PHILIPPINES	8,016	5,220	0.7	Crops
SRI LANKA	2,702	2,564	0.9	Crops
THAILAND	15,806	10,368	0.7	Crops

(1) See Table B-2
(2) Assuming that each economically active agriculture producer constitutes a unit.

APPENDIX III.

Livestock Numbers in AID Countries
Tables B-1, B-2, B-3

TABLE B-1 1979 RUMINANT LIVESTOCK POPULATIONS

COUNTRY	CATTLE (000)	SHEEP (000)	GOATS (000)	CAMELS (000)	BUFFALO (000)
		AFRICA			
BOTSWANA	3,300	450	1,200	0	0
CAMEROON	3,027	2,211	1,720	0	0
ETHIOPIA	25,900	23,234	17,120	966	0
GHANA	930	1,650	2,000	0	0
KENYA	10,470	4,000	4,500	550	0
LESOTHO	550	1,300	730	0	0
LIBERIA	38	190	190	0	0
MALI	4,459	6,067	5,757	208	0
MAURITANIA	1,600	5,200	3,250	720	0
NIGER	2,995	2,500	6,400	330	0
SENEGAL	2,806	1,884	1,000	4	0
SOMALIA	3,800	10,000	16,000	5,400	0
SUDAN	17,300	17,200	12,200	2,500	0
SWAZILAND	650	33	265	0	0
TANZANIA	15,300	3,000	4,700	0	0
UPPER VOLTA	2,700	1,800	2,700	5	0
ZAIRE	1,144	779	2,783	0	0
BENIN	800	950	950	0	0
BURUNDI	836	336	585	0	0
GAMBIA	280	95	92	0	0
GUINEA	1,700	430	395	0	0
MALAWI	790	140	860	0	0
RWANDA	640	257	786	0	0
SIERRA LEONE	270	60	175	0	0
TOGO	250	835	748	0	0
ZAMBIA	1,800	51	300	0	0
		LATIN AMERICA			0
BOLIVIA	3,990	8,700	3,000	0	0
CHILE	3,607	5,952	600	0	0
COLOMBIA	26,137	2,357	639	0	0
COSTA RICA	2,071	2	1	0	0
DOMINICAN REP.	1,150	53	370	0	0
ECUADOR	2,532	2,278	245	0	0
EL SALVADOR	1,368	4	14	0	0
GUATEMALA	1,575	600	76	0	0
GUYANA	280	113	68	0	0
HAITI	1,000	87	1,300	0	0
HONDURAS	1,800	3	15	0	0
JAMAICA	290	6	370	0	0
NICARAGUA	2,846	2	7	0	0
PANAMA	1,423	0	6	0	0
PARAGUAY	5,203	423	126	0	0
PERU	4,187	14,473	2,000	0	0
URUGUAY	10,007	18,690	12	0	0
		NEAR EAST			
EGYPT	1,954	1,679	1,427	105	2,321
JORDAN	33	875	382	10	0
LEBANON	84	242	340	1	0
MOROCCO	3,650	13,500	5,650	220	0
SYRIA	705	7,563	1,094	9	2
TUNISIA	910	3,652	950	221	0
N. YEMEN	950	3,700	7,800	106	0
		ASIA			
BANGLADESH	31,741	1,061	11,000	0	1,529
BURMA	7,560	215	575	0	1,750
INDIA	181,849	41,000	71,000	1,150	60,651
INDONESIA	6,453	3,611	8,051	0	2,312
KOREA REP.	1,651	8	224	0	0
NEPAL	6,850	2,360	2,480	0	4,150
PAKISTAN	14,992	24,185	27,804	830	11,306
PHILIPPINES	1,910	30	1,430	0	3,018
SRI LANKA	1,623	24	461	0	844
THAILAND	4,850	58	31	0	5,500

TABLE B-2 1979 RUMINANT ANIMAL UNITS*

COUNTRY	CATTLE (000 A.U.)	BUFFALO (000 A.U.)	SHEEP AND GOATS (000 A.U.)	CAMELS (000 A.U.)	TOTAL (000 A.U.)
			AFRICA		
BOTSWANA	3,300	0	330	0	3,630
CAMEROON	3,027	0	786	0	3,813
ETHIOPIA	25,900	0	8,071	1,932	35,903
GHANA	930	0	730	0	1,660
KENYA	10,470	0	1,700	1,100	13,270
LESOTHO	550	0	406	0	956
LIBERIA	38	0	76	0	114
MALI	4,459	0	2,365	416	7,240
MAURITANIA	1,600	0	1,690	1,440	4,730
NIGER	2,995	0	1,700	660	5,435
SENEGAL	2,806	0	577	8	3,391
SOMALIA	3,800	0	5,200	10,800	19,800
SUDAN	17,300	0	5,880	5,000	28,180
SWAZILAND	650	0	60	0	710
TANZANIA	15,300	0	1,540	0	16,840
UPPER VOLTA	2,700	0	900	10	3,610
ZAIRE	1,144	0	712	0	1,856
BENIN	800	0	380	0	1,180
BURUNDI	836	0	184	0	1,020
GAMBIA	280	0	37	0	317
GUINEA	1,700	0	165	0	1,865
MALAWI	790	0	200	0	990
RWANDA	640	0	209	0	849
SIERRA LEONE	270	0	47	0	317
TOGO	250	0	317	0	567
ZAMBIA	1,800	0	70	0	1,878
			LATIN AMERICA		
BOLIVIA	3,990	0	2,340	0	6,330
CHILE	3,607	0	1,310	0	4,917
COLOMBIA	26,137	0	599	0	26,735
COSTA RICA	2,071	0	1	0	2,072
DOMINICAN REP.	2,150	0	85	0	2,235
ECUADOR	2,532	0	505	0	3,037
EL SALVADOR	1,368	0	3	0	1,371
GUATEMALA	1,575	0	135	0	1,710
GUYANA	280	0	36	0	316
HAITI	1,000	0	277	0	1,277
HONDURAS	1,800	0	3	0	1,803
JAMAICA	290	0	75	0	365
NICARAGUA	2,846	0	2	0	2,848
PANAMA	1,423	0	1	0	1,424
PARAGUAY	5.203	0	110	0	5,313
PERU	4,187	0	3,295	0	7,482
URUGUAY	10,007	0	3,740	0	13,747
			NEAR EAST		
EGYPT	1,954	2,321	621	210	5,106
JORDAN	33	0	251	20	304
LEBANON	84	0	116	2	202
MOROCCO	3,650	0	3,830	440	7,920
SYRIA	705	2	1,731	18	2,456
TUNISIA	910	0	920	442	2,272
N. YEMEN	950	0	2,300	212	3,462
			ASIA		
BANGLADESH	31,741	1,529	2,412	0	35,682
BURMA	7,560	1,750	158	0	9,468
INDIA	181,849	60,651	22,400	2,300	267,200
INDONESIA	6,453	2,312	2,332	0	11,097
KOREA REP.	1,651	0	46	0	1,697
NEPAL	6,850	4,150	968	0	11,968
PAKISTAN	14,992	11,306	10,398	1,660	38,356
PHILIPPINES	1,910	3,018	292		5,220
SRI LANKA	1,623	844	97		2,564
THAILAND	4,850	5,500	18	0	10,368

*Animal Units

1 Cow or Buffalo = 1 A.U.
5 Sheep or 5 goats = 1 A.U.
1 Camel = 2 A.U.

TABLE B-3 1979 POULTRY AND PIG NUMBERS IN RELATION TO HUMAN AGRICULTURAL POPULATION

	ACTIVE AGRICULTURAL POPULATION (000)	ACTUAL NUMBER OF CHICKENS (000)	NUMBER OF CHICKENS. PER HUNDRED ECON. ACTIVE AGRICULTURAL PEOPLE (000)	ACTUAL NUMBER OF PIGS (000)	NUMBER OF PIGS PER HUNDRED ECON. ACTIVE AGRICULTURAL PEOPLE
			AFRICA		
BOTSWANA	304	620	204	2,200	7.0
CAMEROON	3,124	10,352	331	806	26.0
ETHIOPIA	10,482	52,956	505	18	0.2
GHANA	2,158	11,500	533	400	19.0
KENYA	4,682	17,500	374	65	1.0
LESOTHO	583	1,150	197	80	14.0
LIBERIA	469	2,200	469	100	21.0
MALI	3,050	10,884	357	31	1.0
MAURITANIA	405	3,000	741	0	0.0
NIGER	1,419	7,600	536	29	2.0
SENEGAL	1,722	7,306	424	182	11.0
SOMALIA	1,109	2,800	252	9	1.0
SUDAN	4,307	26,000	605	8	0.2
SWAZILAND	182	600	330	22	12.0
TANZANIA	5,818	20,700	356	25	0.4
UPPER VOLTA	2,941	11,000	374	170	6.0
ZAIRE	8,743	12,411	142	753	9.0
BENIN	732	3,500	478	470	64.0
BURUNDI	1,759	3,032	172	51	3.0
GAMBIA	225	260	116	9	4.0
GUINEA	2,769	5,500	198	37	1.0
MALAWI	2,253	8,000	355	174	8.0
RWANDA	2,193	872	40	83	4.0
SIERRA LEONE	837	3,600	430	35	4.0
TOGO	739	2,900	392	275	37.0
ZAMBIA	1,344	14,000	1,042	180	13.0
			LATIN AMERICA		
BOLIVIA	899	8,447	940	1,412	157.0
CHILE	680	22,000	3,235	1,028	151.0
COLOMBIA	2,209	32,800	1,485	1,916	87.0
COSTA RICA	258	5,600	2,170	226	88.0
DOMINICAN REP.	865	8,000	925	700	81.0
ECUADOR	1,114	23,000	2,065	3,427	308.0
EL SALVADOR	741	6,000	810	560	76.0
GUATEMALA	1,192	13,821	1,159	747	63.0
GUYANA	63	12,000	19,047	132	210.0
HAITI	1,929	4,200	218	1,900	98.0
HONDURAS	661	4,770	722	530	80.0
JAMAICA	157	4,100	2,611	250	159.0
NICARAGUA	344	4,620	1,343	725	211.0
PANAMA	224	4,900	2,187	205	92.0
PARAGUAY	472	12,471	2,642	1,273	270.0
PERU	1,939	36,000	1,857	2,200	113.0
URUGUAY	137	7,575	5,529	400	292.0
			NEAR EAST		
EGYPT	5,848	27,292	467	15	0.2
JORDAN	196	5,846	2,983	0	0.0
LEBANON	86	6,900	8,023	26	30.0
MOROCCO	2,673	22,000	823	12	0.4
SYRIA	1,027	12,687	1,235	1	0.0
TUNISIA	617	15,778	2,557	4	0.6
N. YEMEN	1,211	3,350	277	0	0.0
			ASIA		
BANGLADESH	24,723	70,158	284	0	0.0
BURMA	7,262	17,100	235	2,200	30.0
INDIA	167,046	145,000	87	9,900	6.0
INDONESIA	30,256	99,179	328	2,925	10.0
KOREA REP.	5,650	40,783	721	1,719	30.0
NEPAL	6,162	21,500	349	350	6.0
PAKISTAN	11,721	48,872	417	96	1.0
PHILIPPINES	8,016	60,000	748	7,300	91.0
SRI LANKA	2,702	5,882	218	49	2.0
THAILAND	15,806	65,324	413	5,386	34.0

APPENDIX IV.

Livestock Products in Relation to People in AID Countries
Tables C-1, C-2, C-3, C-4, C-5

TABLE C-1 1979 PRODUCTION OF EDIBLE ANIMAL PRODUCTS: AND CALCULATION OF ESTIMATED KG/PERSON/YR OF SUCH PRODUCTS*

	ALL MEATS (000 MT)	ALL FLUID MILK (000 MT)	MILK PRODUCTS AND EGGS (EQUIV.) (000 MT)	TOTAL EDIBLE ANIMAL PRODUCTS (000 MT)	TOTAL HUMAN POPULATION (000)	ESTIMATED KG/PERSON/YR OF EDIBLE ANIMAL PRODUCTS
			AFRICA			
BOTSWANA	51	91	2	144	798	180
CAMEROON	91	62	8	161	8,248	19
ETHIOPIA	409	783	86	1,278	31,773	40
GHANA	46	8	12	66	11,317	6
KENYA	275	908	24	1,207	15,780	76
LESOTHO	16	19	1	36	1,309	27
LIBERIA	8	3	2	13	1,802	7
MALI	104	151	10	265	6,465	41
MAURITANIA	51	189	4	244	1,588	154
NIGER	75	232	16	323	5,150	63
SENEGAL	68	117	7	192	5,518	35
SOMALIA	145	538	4	687	3,542	194
SUDAN	338	1,427	89	1,854	17,865	104
SWAZILAND	19	36	0.4	55	540	102
TANZANIA	183	783	27	993	17,382	57
UPPER VOLTA	64	98	8	170	6,728	25
ZAIRE	79	6	7	92	27,519	3
BENIN	32	17	2	51	3,424	15
BURUNDI	25	61	3	89	4,383	20
GAMBIA	5	5	0.3	11	587	19
GUINEA	25	43	6	78	4,887	16
MALAWI	29	34	11	74	5,963	12
RWANDA	19	34	0.7	54	4,649	12
SIERRA LEONE	12	14	4	30	3,381	9
TOGO	16	3	1	20	2,618	8
ZAMBIA	51	48	21	120	5,465	22
			LATIN AMERICA			
BOLIVIA	149	96	23	268	5,430	49
CHILE	298	940	104	1,342	10,919	122
COLOMBIA	896	2,700	244	3,840	26,253	146
COSTA RICA	91	313	28	432	2,162	200
DOMINICAN REP.	100	367	26	493	5,800	85
ECUADOR	173	869	81	1,123	7,779	144
EL SALVADOR	65	295	61	421	4,663	90
GUATEMALA	135	319	59	513	7,048	73
GUYANA	18	13	4	35	865	40
HAITI	52	70	11	133	5,677	23
HONDURAS	76	202	32	310	3,565	87
JAMAICA	49	58	48	155	2,162	72
NICARAGUA	177	301	55	533	2,649	201
PANAMA	77	80	32	189	1,899	99
PARAGUAY	147	150	22	319	2,979	107
PERU	308	880	78	1,266	17,291	73
URUGUAY	326	720	30	1,076	2,905	370
			NEAR EAST			
EGYPT	433	1,949	395	2,777	40,926	67
JORDAN	30	47	12	89	3,085	29
LEBANON	22	101	35	158	3,086	51
MOROCCO	196	651	94	941	19,642	48
SYRIA	125	797	115	1,037	8,368	124
TUNISIA	108	272	37	417	6,201	67
N. YEMEN	63	247	31	341	5,785	59
			ASIA			
BANGLADESH	307	1,496	98	1,901	86,062	22
BURMA	194	283	47	524	34,434	15
INDIA	757	25,234	884	26,875	678,255	40
INDONESIA	452	69	160	681	148,470	4
KOREA REP.	376	381	281	1,038	37,313	28
NEPAL	60	721	23	804	13,938	58
PAKISTAN	671	10,039	326	11,036	79,838	138
PHILIPPINES	689	32	195	916	49,493	18
SRI LANKA	32	233	32	297	14,608	20
THAILAND	475	12	202	689	46,347	15

These are index numbers showing relative abundance of edible animal products that are indigenous to the country. The degree to which these data are inclusive of home consumption by farmer and herder families is not known.

TABLE C-2 1979 PRODUCTION OF MEATS FOR AFRICA, LATIN AMERICA, NEAR EAST AND ASIA

	BEEF AND BUFFALO MEAT (000 MT)	MUTTON AND GOAT MEAT (000 MT)	PIG MEAT (000 MT)	POULTRY MEAT (000 MT)	TOTAL MEAT (000 MT)
			AFRICA		
BOTSWANA	45	5	1	0	51
CAMEROON	44	17	19	11	91
ETHIOPIA	218	131	1	59	409
GHANA	13	10	7	16	46
KENYA	196	36	4	39	275
LESOTHO	7	5	3	1	16
LIBERIA	1	1	3	3	8
MALI	47	46	1	10	104
MAURITANIA	28	20	0	3	51
NIGER	41	26	1	7	75
SENEGAL	42	10	7	9	68
SOMALIA	56	86	0	3	145
SUDAN	197	125	0	16	338
SWAZILAND	14	3	1	1	19
TANZANIA	129	30	0	24	183
UPPER VOLTA	33	16	3	12	64
ZAIRE	24	9	30	16	79
BENIN	11	5	12	4	32
BURUNDI	16	3	3	3	25
GAMBIA	4	1	0	0	5
GUINEA	19	2	1	7	29
MALAWI	10	4	7	8	29
RWANDA	14	2	2	1	19
SIERRA LEONE	4	1	2	5	12
TOGO	4	3	5	4	16
ZAMBIA	29	1	9	12	51
			LATIN AMERICA		
BOLIVIA	87	26	30	6	149
CHILE	163	29	43	63	298
COLOMBIA	667	11	115	103	896
COSTA RICA	77	0	8	6	91
DOMINICAN REP.	40	0	23	37	100
ECUADOR	87	9	57	20	173
EL SALVADOR	34	0	15	16	65
GUATEMALA	71	3	12	49	135
GUYANA	3	1	2	12	18
HAITI	19	5	25	3	52
HONDURAS	51	0	10	15	76
JAMAICA	13	1	9	26	49
NICARAGUA	145	0	25	7	177
PANAMA	57	0	6	14	77
PARAGUAY	62	2	70	13	147
PERU	84	33	72	119	308
URUGUAY	265	28	15	18	326
			NEAR EAST		
EGYPT	243	49	2	139	433
JORDAN	3	7	0	20	30
LEBANON	0	3	1	18	22
MOROCCO	75	50	1	70	196
SYRIA	16	65	0	44	125
TUNISIA	34	43	0	31	108
N. YEMEN	12	50	0	1	63
			ASIA		
BANGLADESH	183	46	0	78	307
BURMA	92	4	78	20	194
INDIA	189	394	67	107	757
INDONESIA	176	58	116	102	452
KOREA REP.	85	1	198	92	376
NEPAL	17	17	4	22	60
PAKISTAN	342	289	0	40	671
PHILIPPINES	118	6	386	179	689
SRI LANKA	19	1	1	11	32
THAILAND	221	1	160	93	475

TABLE C-3 1979 FLUID MILK PRODUCTION FOR AFRICA, LATIN AMERICA, NEAR EAST AND ASIA

	COW MILK (000 MT)	BUFFALO MILK (000 MT)	SHEEP MILK (000 MT)	GOAT MILK (000 MT)	TOTAL FLUID MILK (000 MT)
			AFRICA		
BOTSWANA	88	0	0	3	91
CAMEROON	62	0	0	0	62
ETHIOPIA	630	0	58	95	783
GHANA	8	0	0	0	8
KENYA	850	0	15	43	908
LESOTHO	19	0	0	0	19
LIBERIA	1	0	1	1	3
MALI	86	0	30	35	151
MAURITANIA	68	0	53	68	189
NIGER	96	0	12	124	232
SENEGAL	100	0	8	9	117
SOMALIA	166	0	96	276	538
SUDAN	925	0	122	380	1,427
SWAZILAND	36	0	0	0	36
TANZANIA	732	0	0	51	783
UPPER VOLTA	77	0	0	21	98
ZAIRE	6	0	0	0	6
BENIN	12	0	0	5	17
BURUNDI	54	0	1	6	61
GAMBIA	5	0	0	0	5
GUINEA	39	0	1	3	43
MALAWI	34	0	0	0	34
RWANDA	26	0	1	7	34
SIERRA LEONE	14	0	0	0	14
TOGO	3	0	0	0	3
ZAMBIA	48	0	0	0	48
			LATIN AMERICA		
BOLIVIA	55	0	27	14	96
CHILE	930	0	0	10	940
COLOMBIA	2,700	0	0	0	2,700
COSTA RICA	313	0	0	0	313
DOMINICAN REP.	367	0	0	0	367
ECUADOR	860	0	7	2	869
EL SALVADOR	295	0	0	0	295
GUATEMALA	319	0	0	0	319
GUYANA	13	0	0	0	13
HAITI	44	0	0	26	70
	202	0	0	0	202
JAMAICA	58	0	0	0	58
NICARAGUA	301	0	0	0	301
PANAMA	80	0	0	0	80
PARAGUAY	150	0	0	0	150
PERU	860	0	0	20	880
URUGUAY	720	0	0	0	720
			NEAR EAST		
EGYPT	683	1,238	20	8	1,949
	8	0	25	14	47
LEBANON	72	0	11	18	101
MOROCCO	600	0	25	26	651
SYRIA	421	2	293	82	797
TUNISIA	220	0	28	24	272
N. YEMEN	64	0	48	135	247
			ASIA		
BANGLADESH	943	43	15	495	1,496
BURMA	225	52	0	6	283
INDIA	10,000	14,508	0	726	25,234
INDONESIA	69	0	0	0	69
KOREA REP.	380	0	0	1	381
NEPAL	215	475	0	31	721
PAKISTAN	2,040	7,596	33	370	10,039
PHILIPPINES	14	18	0	0	32
SRI LANKA	180	47	0	6	233
THAILAND	5	7	0	0	12

TABLE C-4 1979 PRODUCTION OF MILK PRODUCTS AND EGGS

	CHEESE (MT)	BUTTER AND GHEE (MT)	CONDENSED MILK (MT)	DRY MILK (MT)	HEN EGGS (MT)	OTHER EGGS (MT)	TOTAL (MT)
			AFRICA				
BOTSWANA	798	1,176	0	0	513	0	2,487
CAMEROON	0	0	0	0	8,370	0	8,370
ETHIOPIA	3,932	8,847	0	0	73,300	0	86,079
GHANA	0	0	0	0	12,420	0	12,420
KENYA	359	3,153	188	1,437	19,320	0	24,457
LESOTHO	0	0	0	0	966	0	966
LIBERIA	0	42	0	0	2,112	170	2,324
MALI	0	1,674	0	0	8,142	0	9,816
MAURITANIA	1,193	440	0	0	2,210	0	3,843
NIGER	7,108	4,528	0	0	5,270	0	16,905
SENEGAL	0	424	0	0	6,700	0	7,124
SOMALIA	0	1,657	0	0	2,240	0	3,897
SUDAN	53,550	11,925	0	0	24,000	0	89,475
SWAZILAND	0	161	0	0	270	0	431
TANZANIA	500	3,070	0	0	21,120	2,573	27,263
UPPER VOLTA	0	1,000	0	0	7,040	0	8,040
ZAIRE	0	0	0	0	6,900	0	6,900
BENIN	0	0	0	0	2,520	0	2,520
BURUNDI	0	272	0	0	2,329	0	2,601
GAMBIA	0	0	0	0	364	0	364
GUINEA	0	98	0	0	5,775	0	5,873
MALAWI	0	0	0	0	10,546	0	10,546
RWANDA	0	129	0	0	540	0	669
SIERRA LEONE	0	0	0	0	4,255	11	4,255
TOGO	0	0	0	0	1,392	0	1,392
ZAMBIA	576	161	0	0	20,328	0	21,065
			LATIN AMERICA				
BOLIVIA	7,133	440	0	0	16,400	0	23,973
CHILE	14,774	3,559	12,475	24,163	49,551	0	104,522
COLOMBIA	43,500	12,000	4,700	13,000	170,474	0	243,674
COSTA RICA	5,694	3,400	0	2,125	16,800	0	28,019
DOMINICAN REP.	1,100	1,000	0	0	23,600	0	25,700
ECUADOR	15,260	6,080	0	3,000	56,600	0	80,940
EL SALVADOR	17,614	5,500	0	0	38,250	0	61,364
GUATEMALA	14,163	4,370	0	1,475	38,700	0	58,708
GUYANA	0	0	0	0	3,850	0	3,850
HAITI	1,631	0	0	0	8,400	490	10,521
HONDURAS	8,100	4,000	0	125	20,000	0	32,225
JAMAICA	0	0	32,803	0	15,000	0	47,803
NICARAGUA	17,017	4,140	490	4,875	28,900	0	55,422
PANAMA	365	58	15,635	1,386	15,000	0	32,444
PARAGUAY	0	0	0	0	21,800	420	22,220
PERU	35,880	5,000	97,000	0	40,000	0	177,880
URUGUAY	10,941	5,538	0	0	13,800	0	30,279
			NEAR EAST				
EGYPT	238,680	67,682	0	0	89,000	0	395,362
JORDAN	2,768	0	0	0	8,800	0	11,568
LEBANON	7,683	0	1,448	0	25,900	0	35,031
MOROCCO	4,376	10,049	0	0	79,100	0	93,525
SYRIA	43,198	9,490	0	0	62,500	0	115,188
TUNISIA	4,217	1,814	0	0	31,000	0	37,031
N. YEMEN	16,936	3,719	0	0	10,498	0	31,153
			ASIA				
BANGLADESH	1,398	16,973	0	0	45,463	34,756	98,590
BURMA	14,076	4,939	0	0	23,900	4,300	47,215
INDIA	0	575,100	222,000	0	87,000	0	884,100
INDONESIA	0	0	0	0	80,000	80,000	160,000
KOREA REP.	0	0	1,000	23,400	253,860	2,700	280,960
NEPAL	0	8,720	0	0	14,500	0	23,220
PAKISTAN	0	245,947	0	0	79,000	1,300	326,247
PHILIPPINES	0	0	0	0	184,000	11,000	195,000
SRI LANKA	0	116	6,500	9,500	16,000	55	32,171
THAILAND	0	0	0	0	164,800	37,478	202,278

TABLE C-5 1979 PRODUCTION OF WOOL, HIDES AND SKINS

	WOOL, GREASY (MT)	WOOL, SCOURED (MT)	BUFFALO, CATTLE HIDES (MT)	SHEEP SKINS (MT)	GOAT SKINS (MT)	TOTAL (MT)
			AFRICA			
BOTSWANA	0	0	5,250	176	620	6,046
CAMEROON	0	0	9,764	2,114	1,359	13,237
ETHIOPIA	12,200	6,300	40,793	13,590	11,655	84,538
GHANA	0	0	1,624	778	1,089	3,491
KENYA	1,200	600	29,400	3,840	3,825	38,865
LESOTHO	2,600	1,400	1,320	680	352	6,352
LIBERIA	0	0	532	189	124	845
MALI	320	210	7,772	4,919	3,028	16,249
MAURITANIA	0	0	2,520	1,440	900	4,860
NIGER	0	0	4,370	1,200	4,200	9,770
SENEGAL	0	0	7,700	1,785	1,000	10,485
SOMALIA	0	0	8,740	2,325	8,284	19,349
SUDAN	15,000	6,200	27,300	11,000	8,000	67,500
SWAZILAND	0	0	1,650	45	280	1,975
TANZANIA	0	0	29,560	2,310	3,125	34,995
UPPER VOLTA	0	0	4,230	814	1,491	6,535
ZAIRE	0	0	2,981	691	1,788	5,460
BENIN	0	0	1,872	441	522	2,835
BURUNDI	0	0	3,805	352	753	4,910
GAMBIA	0	0	469	35	48	552
GUINEA	0	0	2,682	180	149	3,011
MALAWI	0	0	1,448	74	542	2,064
RWANDA	0	0	2,166	140	400	2,706
SIERRA LEONE	0	0	1,419	126	154	1,699
TOGO	0	0	810	340	151	1,301
ZAMBIA	0	0	3,751	31	198	3,980
			LATIN AMERICA			
BOLIVIA	8,509	4,500	10,673	5,296	1,425	30,403
CHILE	19,740	9,870	22,016	3,832	650	56,108
COLOMBIA	1,300	770	82,200	1,420	360	86,050
COSTA RICA	0	0	9,375	2	1	9,378
DOMINICAN REP.	0	0	4,943	9	54	5,006
ECUADOR	1,800	1,100	13,825	1,120	172	18,017
EL SALVADOR	0	0	5,497	0	0	5,497
GUATEMALA	0	0	13,200	450	68	13,718
GUYANA	0	0	625	113	36	774
HAITI	0	0	2,288	102	990	3,380
HONDURAS	0	0	8,568	4	17	8,589
JAMAICA	0	0	1,540	4	166	1,710
NICARAGUA	0	0	10,176	0	0	10,176
PANAMA	0	0	6,125	0	0	6,125
PARAGUAY	450	240	11,760	318	101	12,869
PERU	13,000	6,500	14,200	7,350	2,125	43,175
URUGUAY	83,000	42,000	39,680	12,448	0	177,128
			NEAR EAST			
EGYPT	4,000	3,200	32,352	3,210	2,775	45,537
JORDAN	4,300	2,000	494	1,464	1,047	9,305
LEBANON	1,000	540	1,206	972	669	4,387
MOROCCO	22,000	8,400	13,200	7,380	2,700	53,680
SYRIA	17,700	8,800	2,601	9,905	970	39,976
TUNISIA	7,100	3,700	7,530	6,475	1,130	25,935
N. YEMEN	5,500	0	1,800	2,150	6,250	15,700
			ASIA			
BANGLADESH	1,270	760	79,930	620	14,000	96,580
BURMA	237	160	25,181	187	385	26,150
INDIA	35,000	22,750	771,000	36,360	71,280	936,390
INDONESIA	0	0	28,122	4,168	7,491	39,781
KOREA REP.	0	0	11,214	0	178	11,392
NEPAL	4,248	2,336	16,725	2,660	2,923	28,892
PAKISTAN	39,261	24,000	101,612	28,600	33,000	226,473
PHILIPPINES	0	0	16,986	23	1,400	18,409
SRI LANKA	0	0	4,916	13	191	5,120
THAILAND	0	0	39,868	73	31	39,972

APPENDIX V.

Imports and Exports of Livestock Production in AID Countries

A = "Imports of Livestock Products"
As an index of Market Demands, not satisfied by domestic production.
Tables D-1A, D-2A, D-3A

B = "Exports of Livestock Products"
Tables D-1B, D-2B, D-3B

TABLE D-1A 1979 EDIBLE ANIMAL IMPORTS SUMMARY
(Thousands of Dollars)

	LIVE ANIMALS AND MEATS	MILK AND MILK PRODUCTS	EGGS, LARD, ANIMAL FATS AND OILS	TOTAL	TOTAL HUMAN POPULATION (000)	IMPORTS PER YEAR PER 1000 PEOPLE
			AFRICA			
BOTSWANA	$ 1,370	$ 1,760	$ 400	$ 3,530	798	$ 4,420
CAMEROON	11,215	11,010	2,700	24,925	8,248	3,020
ETHIOPIA	0	6,104	0	6,104	31,773	190
GHANA	15,150	9,820	3,400	28,370	11,317	2,510
KENYA	4	1,292	7,807	9,103	15,780	580
LESOTHO	14,215	1,890	360	16,465	1,309	12,580
LIBERIA	16,257	4,950	0	21,207	1,802	11,770
MALI	440	3,730	0	4,170	6,465	650
MAURITANIA	1,310	14,490	0	15,800	1,588	9,950
NIGER	5,630	4,590	0	10,220	5,150	1,980
SENEGAL	17,670	26,200	6,100	49,970	5,518	9,060
SOMALIA	0	5,470	0	5,470	3,542	1,540
SUDAN	0	7,340	720	8,060	17,865	450
SWAZILAND	4,880	3,210	600	8,690	540	16,090
TANZANIA	0	10,004	5,500	15,504	17,382	890
UPPER VOLTA	200	13,540	180	13,920	6,728	2,070
ZAIRE	22,396	26,850	340	49,586	27,519	1,800
BENIN	3,880	2,010	60	5,950	3,424	1,740
BURUNDI	951	0	450	1,401	4,383	320
GAMBIA	294	1,760	0	2,054	587	3,500
GUINEA	290	1,800	310	2,400	4,887	490
MALAWI	230	3,898	3,213	7,341	5,963	1,230
RWANDA	0	2,100	0	2,100	4,649	450
SIERRA LEONE	13,360	4,330	0	17,690	3,381	5,230
TOGO	8,600	1,315	0	9,915	2,618	3,790
ZAMBIA	710	8,350	1,050	10,110	5,465	1,850
			LATIN AMERICA			
BOLIVIA	300	9,400	6,300	16,000	5,430	2,950
CHILE	41,530	42,020	4,720	88,270	10,919	8,080
COLOMBIA	5,576	44,170	33,006	82,752	26,253	3,152
COSTA RICA	6,546	5,910	1,180	13,636	2,162	6,310
DOMINICAN REP.	6,818	8,269	16,750	31,[illegible]	5,800	5,490
ECUADOR	1,900	6,773	21,000	29,673	7,779	3,810
EL SALVADOR	4,250	22,933	12,594	39,777	4,663	8,530
GUATEMALA	45,957	7,540	5,000	58,497	7,048	8,300
GUYANA	500	14,040	2,981	17,521	865	20,260
HAITI	483	13,120	8,340	21,943	5,677	3,870
HONDURAS	109,969	13,710	4,320	127,999	3,565	35,900
JAMAICA	24,820	20,550	11,743	57,113	2,162	26,420
NICARAGUA	2,593	4,170	3,700	10,463	2,649	3,950
PANAMA	12,648	6,800	1,440	20,888	1,899	11,000
PARAGUAY	58,000	230	0	58,230	2,979	19,550
PERU	2,430	36,435	3,400	42,265	17,291	2,440
URUGUAY	200	1,100	4,700	6,000	2,905	2,070
			NEAR EAST			
EGYPT	78,491	127,730	111,334	317,555	40,926	7,760
JORDAN	50,502	35,273	6,150	91,925	3,085	29,800
LEBANON	92,800	56,700	3,500	153,000	3,086	49,580
MOROCCO	8,185	54,400	6,600	69,185	19,642	3,520
SYRIA	11,197	67,316	1,063	79,576	8,368	9,510
TUNISIA	16,412	42,545	900	59,857	6,201	9,650
N. YEMEN	66,500	39,720	0	106,220	5,785	18,360
			ASIA			
BANGLADESH	0	29,210	7,252	36,462	86,062	420
BURMA	0	10,170	3,800	13,970	34,434	410
INDIA	490	71,940	7300	79,730	678,255	120
INDONESIA	6,038	53,364	446	59,848	148,470	400
KOREA REP.	186,705	5,232	107,833	299,770	37,313	8,030
NEPAL	19,800	0	0	19,800	13,938	1,420
PAKISTAN	57	22,865	30,672	53,594	79,838	670
PHILIPPINES	17,346	99,183	7,780	124,309	49,493	2,510
SRI LANKA	0	25,895	2,800	28,605	14,608	1,960
THAILAND	354	56,560	5,613	62,527	46,347	1,350

TABLE D-2A 1979 IMPORTS OF LIVESTOCK AND MEAT PRODUCTS
(Thousands of Dollars)

	LIVE ANIMALS		MEATS			
	CATTLE	SHEEP AND GOATS	FRESH, CHILLED OR FROZEN	SALTED, DRIED OR SMOKED	CANNED MEATS	TOTAL
			AFRICA			
BOTSWANA	$ 720	$ 0	$ 650	$ 0	$ 0	$ 1,370
CAMEROON	7,300	190	1,475	0	2,250	11,215
ETHIOPIA	0	0	0	0	0	0
GHANA	0	1,020	12,800	1,110	220	15,150
KENYA	0	0	0	0	4	4
LESOTHO	12,500	1,715	0	0	0	14,215
LIBERIA	7,500	1,200	1,227	4,300	2,030	16,257
MALI	0	0	0	0	440	440
MAURITANIA	0	0	1,200	0	110	1,310
NIGER	0	0	5,000	0	630	5,630
SENEGAL	6,500	5,300	5,020	0	850	17,670
SOMALIA	0	0	0	0	0	0
SUDAN	0	0	0	0	0	0
SWAZILAND	1,700	780	2,400	0	0	4,880
TANZANIA	0	0	0	0	0	0
UPPER VOLTA	0	200	0	0	0	200
ZAIRE	120	300	15,626	800	5,550	22,396
BENIN	2,500	370	530	0	480	3,880
BURUNDI	0	0	151	0	800	951
GAMBIA	0	0	160	14	120	294
GUINEA	0	290	0	0	0	290
MALAWI	0	0	90	0	140	230
RWANDA	0	0	0	0	0	0
SIERRA LEONE	8,000	1,300	3,630	220	210	13,360
TOGO	4,000	750	3,200	0	650	8,600
ZAMBIA	110	0	0	0	600	710
			LATIN AMERICA			
BOLIVIA	0	0	0	0	300	300
CHILE	1,500	0	39,400	0	630	41,530
COLOMBIA	4,256	0	350	220	750	5,576
COSTA RICA	2,001	0	735	300	3,510	6,546
DOMINICAN REP.	180	0	5,503	640	495	6,818
ECUADOR	1,900	0	0	0	0	1,900
EL SALVADOR	0	0	600	390	3,260	4,250
GUATEMALA	44,000	0	1,077	700	180	45,957
GUYANA	0	0	0	300	200	500
HAITI	0	0	73	40	370	483
HONDURAS	108,000	0	0	39	1,930	109,969
JAMAICA	0	0	15,800	580	8,440	24,820
NICARAGUA	320	0	360	34	1,879	2,593
PANAMA	35	0	2,013	4,700	5,900	12,648
PARAGUAY	58,000	0	0	0	0	58,000
PERU	450	0	1,230	0	750	2,430
URUGUAY	0	200	0	0	0	200
			NEAR EAST			
EGYPT	253	0	72,454	0	5,784	78,491
JORDAN	950	11,102	33,360	0	5,090	50,502
LEBANON	16,000	29,000	37,300	0	10,500	92,800
MOROCCO	1,050	5	7,130	0	0	8,185
SYRIA	3,600	5,537	0	0	2,060	11,197
TUNISIA	6,243	2,492	7,027	0	650	16,412
N. YEMEN	0	2,500	60,000	0	4,000	66,500
			ASIA			
BANGLADESH	0	0	0	0	0	0
BURMA	0	0	0	0	0	0
INDIA	0	130	0	0	360	490
INDONESIA	1,600	0	2,953	175	1,310	6,038
KOREA REP.	25,671	0	160,051	14	969	186,705
NEPAL	17,000	2,800	0	0	0	19,800
PAKISTAN	0	38	1	2	16	57
PHILIPPINES	45	0	16,551	360	390	17,346
SRI LANKA	0	0	0	0	0	0
THAILAND	0	0	54	0	300	354

TABLE D-3A 1979 IMPORTS OF DAIRY PRODUCTS AND EGGS
(Thousands of Dollars)

	DAIRY PRODUCTS			EGGS		
	MILK: ALL FORMS	BUTTER AND GHEE	CHEESE	EGGS IN SHELL	EGGS LIQUID OR DRIED	TOTAL
			AFRICA			
BOTSWANA	$ 1,760	$ 0	$ 260	$ 400	$ 0	$ 2,160
CAMEROON	9,150	750	1,110	0	0	11,010
ETHIOPIA	5,984	120	0	0	0	6,104
GHANA	7,200	2,400	220	0	0	9,820
KENYA	1,200	30	62	24	0	1,316
LESOTHO	1,450	0	440	0	360	2,250
LIBERIA	4,250	300	400	0	0	4,950
MALI	3,250	300	180	0	0	3,730
MAURITANIA	9,800	4,500	190	0	0	14,490
NIGER	4,350	130	110	0	0	4,590
SENEGAL	16,700	8,100	1,400	0	0	26,200
SOMALIA	4,370	1,100	0	0	0	5,470
SUDAN	4,700	2,300	340	0	0	7,340
SWAZILAND	2,700	310	200	600	0	3,810
TANZANIA	8,684	1,200	120	0	0	10,004
UPPER VOLTA	12,950	370	220	0	180	13,720
ZAIRE	25,400	800	650	340	0	27,190
BENIN	1,900	110	0	60	0	2,070
BURUNDI	0	0	0	0	180	180
GAMBIA	1,570	190	0	0	0	1,760
GUINEA	1,800	0	0	0	0	1,800
MALAWI	3,568	150	180	0	0	3,898
RWANDA	2,100	0	0	0	0	2,100
SIERRA LEONE	3,760	400	170	0	0	4,330
TOGO	840	300	175	0	0	1,315
ZAMBIA	4,250	4,100	0	0	0	8,350
			LATIN AMERICA			
BOLIVIA	9,400	0	0	0	0	9,400
CHILE	26,520	14,100	1,400	170	0	42,190
COLOMBIA	32,170	12,000	0	190	0	44,360
COSTA RICA	4,530	950	430	500	0	6,410
DOMINICAN REP.	5,179	2,700	390	2,000	0	10,269
ECUADOR	6,773	0	0	2,000	0	8,773
EL SALVADOR	22,033	100	800	100	0	23,033
GUATEMALA	7,120	250	170	0	0	7,540
GUYANA	11,200	440	2,400	2,000	0	16,040
HAITI	10,420	2,000	700	340	0	13,460
HONDURAS	11,700	1,800	210	410	0	14,120
JAMAICA	11,050	6,500	3,000	5,700	30	26,280
NICARAGUA	4,060	0	110	500	0	4,670
PANAMA	1,700	2,700	2,400	240	0	7,040
PARAGUAY	230	0	0	0	0	230
PERU	12,335	23,000	1,100	0	0	36,435
URUGUAY	1,100	0	0	0	0	1,100
			NEAR EAST			
EGYPT	18,416	90,000	19,314	1,291	0	129,021
JORDAN	19,300	12,000	3,973	5,600	0	40,873
LEBANON	15,200	14,000	27,500	0	0	56,700
MOROCCO	24,000	29,000	1,400	0	0	54,400
SYRIA	13,602	39,634	14,080	883	0	68,199
TUNISIA	30,070	7,388	5,087	900	0	43,445
N. YEMEN	32,000	6,800	920	0	0	39,720
			ASIA			
BANGLADESH	25,610	3,600	0	0	0	29,210
BURMA	9,600	570	0	0	0	10,170
INDIA	36,500	35,000	440	0	0	71,940
INDONESIA	35,864	16,200	1,300	190	10	53,564
KOREA REP.	4,908	117	207	229	117	5,578
NEPAL	0	0	0	0	0	0
PAKISTAN	17,690	5,039	86	0	0	22,865
PHILIPPINES	78,983	14,000	6,200	0	0	99,183
SRI LANKA	24,435	1,200	260	0	0	25,895
THAILAND	49,000	7,000	560	0	0	56,560

TABLE D-1B 1979 EDIBLE ANIMAL EXPORTS SUMMARY
(Thousands of Dollars)

COUNTRY	LIVE ANIMALS AND MEATS	MILK AND MILK PRODUCTS	EGGS, LARD, ANIMAL FAT AND OILS	TOTAL	TOTAL HUMAN POPULATION (000)
			AFRICA		
BOTSWANA	$ 76,530	$ 200	$ 0	$ 76,730	$ 798
CAMEROON	4,070	0	0	4,070	8,248
ETHIOPIA	3,380	34	0	3.414	31,773
GHANA	0	0	0	0	11,317
KENYA	10,420	5,815	532	16,767	15,780
LESOTHO	4,500	0	0	4,500	1,309
LIBERIA	0	0	0	0	1,802
MALI	32,400	0	0	32,400	6,465
MAURITANIA	27,000	0	0	27,000	1,588
NIGER	15,830	0	0	15,830	5,150
SENEGAL	260	91	0	351	5,518
SOMALIA	65,000	0	0	65,000	3,542
SUDAN	30,600	0	0	30,600	17,865
SWAZILAND	6,310	0	0	6,310	540
TANZANIA	450	0	0	450	17,382
UPPER VOLTA	17,400	0	0	17,400	6,728
ZAIRE	0	0	10	10	27,519
BENIN	0	0	0	0	3,424
BURUNDI	5,125	0	0	5,125	4,383
GAMBIA	0	0	0	0	587
GUINEA	9,310	0	0	9,310	4,887
MALAWI	0	0	0	0	5,963
RWANDA	7,585	0	0	7,585	4,649
SIERRA LEONE	0	0	0	0	3,381
TOGO	0	0	0	0	2,618
ZAMBIA	0	0	0	0	5,465
			LATIN AMERICA		
BOLIVIA	30,000	0	0	30,000	5,430
CHILE	5,500	756	0	6,256	10,919
COLOMBIA	105,012	20,482	0	125,494	26,253
COSTA RICA	83,418	0	0	83,418	2,162
DOMINICAN REP.	3,600	0	0	3,600	5,800
ECUADOR	0	0	0	0	7,779
EL SALVADOR	15,460	270	0	15,730	4,663
GUATEMALA	44,960	1,430	265	46,655	7,048
GUYANA	0	0	0	0	865
HAITI	2,950	0	0	2,950	5,677
HONDURAS	94,000	0	0	9,400	3,565
JAMAICA	500	0	0	500	2,162
NICARAGUA	195,057	7,000	0	202,057	2,649
PANAMA	2,770	2,700	0	5,470	1,899
PARAGUAY	13,400	0	0	13,400	2,979
PERU	1,000	0	0	1,000	17,291
URUGUAY	115,729	2,300	0	118,029	2,905
			NEAR EAST		
EGYPT	10,366	76	39	10,481	40,926
	341	534	4,192	5,067	3,085
LEBANON	0	0	9,100	9,100	3,086
MOROCCO	4,300	0	0	4,300	19,642
SYRIA	8,956	445	0	9,401	8,368
TUNISIA	600	0	0	600	6,201
N. YEMEN	0	0	0	0	5,785
			ASIA		
BANGLADESH	6,000	0	0	6,000	86,062
BURMA	0	0	0	0	34,434
INDIA	38,900	420	0	39,320	678,255
INDONESIA	7,300	0	0	7,300	148,470
KOREA REP.	47,587	45	0	47,632	37,313
NEPAL	3,320	3,300	0	6,620	13,938
PAKISTAN	208	0	28	236	79,838
PHILIPPINES	570	1,400	28	1,998	49,493
SRI LANKA	0	0	0	0	14,608
THAILAND	37,529	7,500	2,165	47,194	46,347

TABLE D-2B 1979 EXPORTS OF LIVESTOCK AND MEAT PRODUCTS
(Thousands of Dollars)

	LIVE ANIMALS		MEATS			
	CATTLE	SHEEP AND GOATS	FRESH, CHILLED OR FROZEN	SALTED, DRIED OR SMOKED	CANNED MEATS	TOTAL
			AFRICA			
BOTSWANA	$ 0	$ 230	$ 76,300	$ 0	$ 0	$ 76,530
CAMEROON	1,350	80	2,640	0	0	4,070
ETHIOPIA	979	1,021	180	0	1,200	3,380
GHANA	0	0	0	0	0	0
KENYA	390	0	4,585	1,182	4,263	10,420
LESOTHO	4,500	0	0	0	0	4,500
LIBERIA	0	0	0	0	0	0
MALI	22,000	10,400	0	0	0	32,400
MAURITANIA	13,000	14,000	0	0	0	27,000
NIGER	13,000	2,650	130	50	0	15,830
SENEGAL	0	260	0	0	0	260
SOMALIA	12,000	53,000	0	0	0	65,000
SUDAN	3,600	27,000	0	0	0	30,600
SWAZILAND	0	610	5,000	0	700	6,310
TANZANIA	0	0	0	0	450	450
UPPER VOLTA	9,000	8,400	0	0	0	17,400
ZAIRE	0	0	0	0	0	0
BENIN	0	0	0	0	0	0
BURUNDI	5,000	125	0	0	0	5,125
GAMBIA	0	0	0	0	0	0
GUINEA	8,400	910	0	0	0	9,310
MALAWI	0	0	0	0	0	0
RWANDA	7,500	85	0	0	0	7,585
SIERRA LEONE	0	0	0	0	0	0
TOGO	0	0	0	0	0	0
ZAMBIA	0	0	0	0	0	0
			LATIN AMERICA			
BOLIVIA	30,000	0	0	0	0	30,000
CHILE	0	500	5,000	0	0	5,500
COLOMBIA	78,000	0	27,012	0	0	105,012
COSTA RICA	797	0	80,420	0	2,200	83,418
DOMINICAN REP.	0	0	3,600	0	0	3,600
ECUADOR	0	0	0	0	0	0
EL SALVADOR	0	0	15,460	0	0	15,460
GUATEMALA	9,000	0	33,410	250	2,300	44,960
GUYANA	0	0	0	0	0	0
HAITI	0	0	2,950	0	0	2,950
HONDURAS	40,000	0	54,000	0	0	94,000
JAMAICA	0	0	0	0	500	500
NICARAGUA	99,000	0	95,527	0	530	195,057
PANAMA	270	0	2,500	0	0	2,770
PARAGUAY	8,000	0	4,572	0	828	13,400
PERU	0	0	1,000	0	0	1,000
URUGUAY	8,956	1,379	101,694	0	3,700	115,729
			NEAR EAST			
EGYPT	0	10,085	281	0	2	10,366
JORDAN	0	341	0	0	0	341
LEBANON	0	0	0	0	0	0
MOROCCO	0	0	4,300	0	0	4,300
SYRIA	1	8,955	0	0	0	8,956
TUNISIA	0	0	600	0	0	600
N. YEMEN	0	0	0	0	0	0
			ASIA			
BANGLADESH	0	0	6,000	0	0	6,000
BURMA	0	0	0	0	0	0
INDIA	1,200	4,200	33,500	0	0	38,900
INDONESIA	0	0	7,300	0	0	7,300
KOREA REP.	0	0	47,183	245	159	47,587
NEPAL	3,320	0	0	0	0	3,320
PAKISTAN	190	16	2	0	0	208
PHILIPPINES	0	0	570	0	0	570
SRI LANKA	0	0	0	0	0	0
THAILAND	12,000	0	25,529	0	0	37,529

TABLE D-3B 1979 EXPORTS OF DAIRY PRODUCTS
(Thousands of Dollars)

	DAIRY PRODUCTS			EGGS		
	MILK: ALL FORMS	BUTTER AND GHEE	CHEESE	EGGS IN SHELL	EGGS LIQUID OR DRIED	TOTAL
			AFRICA			
BOTSWANA	$ 0	$ 200	$ 0	$ 0	$ 0	$ 200
CAMEROON	0	0	0	0	0	0
ETHIOPIA	0	0	0	0	0	34
GHANA	0	0	0	0	0	0
KENYA	3,430	2,269	116	237	0	6,052
LESOTHO	0	0	0	0	0	0
LIBERIA	0	0	0	0	0	0
MALI	0	0	0	0	0	0
MAURITANIA	0	0	0	0	0	0
NIGER	0	0	0	0	0	0
SENEGAL	91	0	0	0	0	91
SOMALIA	0	0	0	0	0	0
SUDAN	0	0	0	0	0	0
SWAZILAND	0	0	0	0	0	0
TANZANIA	0	0	0	0	0	0
UPPER VOLTA	0	0	0	0	0	0
ZAIRE	0	0	0	0	0	0
BENIN	0	0	0	0	0	0
BURUNDI	0	0	0	0	0	0
GAMBIA	0	0	0	0	0	0
GUINEA	0	0	0	0	0	0
MALAWI	0	0	0	0	0	0
RWANDA	0	0	0	0	0	0
SIERRA LEONE	0	0	0	0	0	0
TOGO	0	0	0	0	0	0
ZAMBIA	0	0	0	0	0	0
			LATIN AMERICA			
BOLIVIA	0	0	0	0	0	0
CHILE	192	0	0	0	0	756
COLOMBIA	0	0	20,482	0	0	20,482
COSTA RICA	0	0	0	0	0	682
DOMINICAN REP.	0	0	0	0	0	0
ECUADOR	0	0	0	0	0	0
EL SALVADOR	0	0	270	0	0	270
GUATEMALA	230	0	1,200	190	0	1,620
GUYANA	0	0	0	0	0	0
HAITI	0	0	0	0	0	0
	0	0	0	0	0	0
JAMAICA	0	0	0	0	0	0
NICARAGUA	7,000	0	0	0	0	7,000
PANAMA	2,600	100	0	0	0	2,700
PARAGUAY	0	0	0	0	0	0
PERU	0	0	0	0	0	0
URUGUAY	0	0	2,300	0	0	2,300
			NEAR EAST			
EGYPT	34	1	41	13	0	89
	0	0	534	4,192	0	4,873
LEBANON	0	0	0	9,100	0	9,100
MOROCCO	0	0	0	0	0	0
SYRIA	422	0	23	0	0	445
TUNISIA	0	0	0	0	0	0
N. YEMEN	0	0	0	0	0	0
			ASIA			
BANGLADESH	0	0	0	0	0	0
BURMA	0	0	0	0	0	0
INDIA	420	0	0	0	0	420
INDONESIA	0	0	0	0	0	0
KOREA REP.	45	0	0	0	0	45
NEPAL	0	3,300	0	0	0	3,300
PAKISTAN	0	0	0	0	0	0
PHILIPPINES	1,400	0	0	0	0	1,400
SRI LANKA	0	0	0	0	0	0
THAILAND	7,500	0	0	1,950	0	9,450

APPENDIX VI.

AID Livestock Projects

APPENDIX VI.

AID Livestock Projects

Appendix VI presents a listing of AID livestock projects that have been funded since 1973, or were funded in 1973. This summary specifies project, country, duration, purpose, problem, strategy, summary, output, species, and problem addressed.

Of the 108 projects analyzed 80 include a livestock related output. Of the 80 projects, 55% are in Africa, 19% in Latin America and the Caribbean, 10% in Asia, 5% in the Near East, and 11% for general technical assistance. These projects deal with almost all aspects of livestock production including general productivity, economic aspects, disease control, range management, pasture improvement, and animal breeding. Animal species include cattle, swine, sheep, goats, poultry, rabbits, and buffalo. Of nine general technical assistance projects, seven specifically mention a "system approach" or "multidisciplinary research" in defining the purpose of the projects, and 14 other projects in specific countries mention "small farmers" or "farming systems" as part of the project purpose.

At present there are AID-funded projects related to all the seven types of livestock production systems listed in Table 3 of the text. There are projects related to most of the ecological and socioeconomic constraints. Most projects were designed to reach one or more of the development goals outlined above. A number of the projects take a "farming systems" approach.

AID LIVESTOCK PROJECTS
Information Gathered from Computer Printout
PREPARED BY: BOISSEVAIN, DS/DIU,RM.1656,NS,TEL.632-9345

NUMBER	COUNTRY	PROJECT TITLE	DURATION	PURPOSE	PROBLEM	STRATEGY	SUMMARY	OUTPUT	SPECIES	PROBLEM ADDRESSED, FEED-DISEASE-MARKET-BREEDING-ETC.
1500023	Portugal	Ag Production	80-80	Increase ag productivity and farmers income to lessen dependence on imported foods.	N	N	Y	N	---	-----
3060090	Afghanistan	H-A Valley Dev-Agri	54-76	Increase food-grain productions	N	N	Y	N	---	-----
3670132	Nepal	Resourse Cons. & Utilization	80-85	Protect and restore soil, water and resource base in key mountain catchment areas. Improve range management and animal husbandry activities.	Y	Y	Y	Y	sheep goats cattle buffalo	range, health
3910320	Pakistan	Ag Technical Support	69-74	Assess possible strategies, projects for ag development	N	N	Y	Y	---	-----
4390065-02	Laos	Ag Development Livestock	64-76	Veterinary medicine and livestock effective development	Y	Y	Y	Y	buffalo beef	entire range of livestock needs
4890594-01	Korea, Republic of	Rural Policy Plan and Survey	64-75	Consolidate and up-grade govt. ag agencies and to intensify prod on land currently used.	N	N	Y	N	---	broader livestock program
4930180-09	Thailand	Thailand-Livestock Development	64-80	Upgrade livestock and poultry industry in N.E. Thailand	Y	Y	Y	Y	cattle	disease control, breeding & pasture improvement
4930295	Thailand	Non-Formal Vocational Education	80-80	Develop and institutionalize a system to provide rural development training to low-income farm families	N	N	Y	N	---	-----
5040039	Guyana.	Diversification and Development of Agric	67-74	Plans for economically viable production systems-crops-soil-cattle	N	N	Y	N	dairy cattle	breeding, nutrition, marketing
5100062	Argentina	Animal Disease/Meat Technology Labs	66-66	Eradicate foot-and-mouth disease in Argentina	Y	Y	Y	Y	cattle	disease
5110364-02	Bolivia	Sheep, Llama, Alpaca Prod. & Marketing	72-76	Integrate subsistence farmers' sheep prod into national economy	Y	N	Y	Y	sheep	marketing
5110464	Bolivia	Exploratory Research on Plan System	76-79	Assistance to research crop and livestock technologies of integration in small farm systems	N	N	Y	Y	---	-----
5110485	Bolivia	Farm Policy Study	78-80	Obtain and utilize reliable information on socioeconomic characteristics of rural farm and non-farm households	N	N	N	Y	---	-----
5110511	Bolivia	Departmental Dev Corp (DDCS)	79-79	Through DDCS-improve standard of living and quality of life of the rural poor	N	N	N	N	---	-----
5120174-05	Brazil	Food for Peace-Planning and Supervision	64-74	Brazil's poultry and livestock is strengthened-training	Y	Y	Y	Y	poultry livestock	process-marketing
5120247	Brazil	Ag Prod - Livestock	64-73	Improve ag prod - seeds, fertilizer, disease control	Y	N	Y	Y	livestock	disease
5130310	Chile	Mapuche Livestock Dev PVO-OPG	78-80	Credit program expanded to reach Mapuche farm families... land rehabilitation-purchase dairy cows, supplies, etc.	Y	N	Y	Y	dairy cows	purchasing
5130316	Chile	Multisectoral Community Devel. (PVO-OPG)	79-79	Expand integrated rural community programs to meet educational, nutritional, etc. of Sol de Septiembre	N	N	N	N	---	-----

NUMBER	COUNTRY	PROJECT TITLE	DURATION	PURPOSE	PROBLEM	STRATEGY	SUMMARY	OUTPUT	SPECIES	PROBLEM ADDRESSED, FEED-DISEASE-MARKET-BREEDING-ETC.
5140226	Colombia	Ag Training Program (PVO-OPG)	79-79	To strengthen ag training programs on hogar (Farm Youth Home Program) farms.	N	N	N	N	---	-----
5190012	El Salvador	Ag Development	64-77	Institutional capability to direct the ag sector into an expanded and diversified role	N	N	N	N	---	-----
5190215	El Salvador	Integrated Rural Development	79-80	A community-based integrated rural development program	Y	N	Y	N	livestock	productivity
5240073	Nicaragua	Ag Prod & Diversification	70-76	Establish a scientific basis for increased prod of selected crops, meat prod; market of food, feed crops, livestock, livestock products, etc.	N	N	N	Y	livestock	production marketing
5250173	Panama	Agriculture	75-75	An expanded technical/credit capability in the Ministry of Ag Extension Svs.	N	N	Y	Y	livestock	purchasing
5250200	Panama	Guaymi Area Dev.	79-79	To institutionalize a coordinated participatory system for providing GOP services & financial resources	N	N	Y	N	fish/ small animals	production
5260050-01	Paraguay	Institutional Development	70-74	An established and improved institutional framework for ag development	N	N	N	N	---	-----
5260050-03	Paraguay	Institional Development-Livestock	70-74	To develop the institional capacity of the Ministry of Ag in a livestock program-& provide trained manpower	Y	N	Y	Y	livestock	over-all
5260050-08	Paraguay	Inst. Dev. - Small Farmer Lvsk Dev.	70-74	Non-beef livestock dev program, specifically aimed at the small farmers	Y	Y	Y	Y	swine sheep poultry	production
5260103	Paraguay	Small Farm Lvsk Prod	76-76	Broaden faculty of FAV & MAG to include livestock to small farmer. Consolidate & transmit research info to beef cattle producers.	Y	Y	Y	Y	livestock	over-all
5260501	Paraguay	Rural Non-Farm Education	69-70	Education to rural illiterate and semi-literate and training programs who have limited access to opportunity	N	N	Y	N	livestock	over-all
5270163	Peru	Dev of Sub-Tropical Lands	78-78	Increase crop and livestock prod. Land dev-roads, etc.	N	N	Y	N	livestock	production
5270179	Peru	IPFE Campesinos Skills Training PVO-OPG	78-79	Small farmers in the sierra and high jungles of Peru trained in modern farm practices.	N	N	Y	Y	livestock poultry	care nutrition
5320045	Jamaica	Rural Community Nutr-Income Improvement	78-79	Multi-disciplinary teams organized & trained to educate Jamaicans in nutrition, gardening and raising livestock	Y	N	Y	Y	goats rabbits	rearing
5380023	Other W.I.= Eastern Caribbean Reg.	Caribbean Dev Facility	78-78	To assist the govts of the English speaking Caribbean countries to maintain adequate levels of dev investments	N	N	Y	N	livestock dairy	over-all
5960083	Reg. Office Central Amer. & Panama ROCA	Small Farm Prod Systems	79-83	Develop a continuing C. American capability to conduct & convey to small farmers crop, animal, and mixing farming production systems research	N	N	Y	Y	animal	over-all
6080078	Morocco	Livestock & Rangeland Improvement	68-75	A feasible and realistic livestock and range management improvement program to be implemented on grazing lands.	Y	Y	Y	Y	livestock	range mgmt

NUMBER	COUNTRY	PROJECT TITLE	DURATION	PURPOSE	PROBLEM	STRATEGY	SUMMARY	OUTPUT	SPECIES	PROBLEM ADDRESSED, FEED-DISEASE-MARKET-BREEDING-ETC.
6080122	Morocco	Ag Research Training	75-75	Specialized manpower in ag branches concerned with food crop and livestock research production, processing and marketing	Y	Y	Y	Y	livestock	marketing
6120202	Malawi	Ag Research	79-83	To provide quality research programs in smallholder crop and livestock production.	Y	Y	Y	Y	livestock	production
6150100-01	Kenya	Range Development	9 yrs	To develop existing and potential rangelands to increase livestock prod for domestic consumption and exportation	Y	Y	Y	Y	beef sheep goats	production
6150101-05	Kenya	Crop and Livestock Extension	60-74	Establish effective field svs enabling farmers to improve crop and livestock production techniques	N	N	Y	N	livestock	production/ marketing
6150157	Kenya	Natl. Range/Ranch Mgmt	73-81	Increase livestock production by low-income producers.	Y	Y	Y	Y	livestock	production
6150160	Kenya	Kenya Livestock Dev	75-77	Improve production & marketing infrastructure to increase beef prod to meet domestic demand & earn foreign exchange	Y	Y	Y	Y	cattle	mktg, mgmt production,
6150164	Kenya	Design ASS R&R Pre-Invstmt Study	75-78	Develop resource mgmt strategy to increase stock and crop production	N	N	Y	N	domestic animals	-----
6170047	Uganda	Livestock Development	68-68	Increase productivity in livestock sector.	Y	Y	Y	Y	dairy livestock	production
6170052	Uganda	Lvsk Prod & Marketing	72-75	Provide technical assis. & manpower training to increase production and utilization of resources.	Y	Y	Y	Y	livestock	over-all
6180602	East Africa	Nairobi Veterinary Facility	62-74	Upgrade the faculty and curriculum of the UofN School of Veterinary Science to supply required # of qualified vets	Y	N	N	N	livestock	lack of vets
6180644	East Africa	Animal and Crop Prod	69-74	Develop institutional capability to perform research and tests towards increased crop & livestock prod	N	N	Y	Y	beef	feeding disease
6200770	Nigeria	Ag Ext. - No Nigeria	66-75	Develop a sufficient well-organized and efficient ext. service.	N	N	Y	Y	beef poultry swine	production
6200774	Nigeria	Livestock dev-No Nigeria	----	Nigeria's domestic capability for beef production is increased	Y	N	Y	Y	beef poultry	production
6200817	Nigeria	Ahmadu Univ. Vet Medicine Faculty	71-75	Develop faculty to improve animal health & production	Y	N	N	Y	animals	health production
6210093	Tanzania	Masai Livestock and Range Management	70-79	To achieve a sustained high level of livestock offtake in the Masai district consistent w/proper resource management and Tanzania development goals.	Y	Y	Y	Y	livestock	over-all
6210103	Tanzania	Agricultural Projects Support	71-71	Provide equipment, materials for 2 technical assistance projects, 6210092 and 6210093	Y	N	N	Y	livestock	-----
6210118	Tanzania	TSETSE Fly Eradication Loan	71-71	Eradicate TSETSE fly from West Lake region	Y	N	N	N	-----	-----

NUMBER	COUNTRY	PROJECT TITLE	DURATION	PURPOSE	PROBLEM	STRATEGY	SUMMARY	OUTPUT	SPECIES	PROBLEM ADDRESSED, FEED-DISEASE-MARKET-BREEDING-ETC.
6210122	Tanzania	Livestock Marketing Development	73-79	Update and increase effectiveness of agri inputs, strategy and personnel in livestock development, seed multiplication, agri research and agri manpower development.	Y	Y	Y	Y	livestock	over-all
6210129	Tanzania	Dairy Production Assistance	75-78	(1) Build genetic base on which dairy industry can expand. (2) Increase small holder farmer dairy production.	Y	Y	Y	Y	livestock	milk production
6210143	Tanzania	Arusha Planning and Village Development	78-82	Agricultural production increased. Provide micro-data that will assist in the preparation of the Arusha Region integrated rural development plan.	Y	N	Y	Y	livestock	technologies
6210149	Tanzania	Training for Rural Development	79-80	To train a selected number of Tanzanians for strengthening the GOT capability to implement its rural development policy.	N	N	Y	N	livestock	production
6250014	Central and West Africa Regional	Entente Livestock II	77-77	To increase the efficiency and productivity of livestock sector while increasing the standard of living of small livestock producers.	Y	Y	Y	Y	livestock	production
6250506	Central and West Africa Regional	Support to Regional Organizations	69-79	Selected African regional organizations assisted to design and implement development projects, primarily in the agri sector, whose objectives can best be obtained by joint action of several countries.	N	N	N	Y	livestock	production
6250523	Central and West Africa Regional	West Africa Livestock Development and Meat Marketing	70-75	To achieve and sustain higher levels of livestock production and marketing in the Entente area w/n a modern institutionalized regional framework.	Y	Y	Y	Y	livestock	over-all
6250536	Central and West Africa Regional	Support to Regional Organization	70-72	The ability of Central African regional organizations to plan and implement development projects strengthened.	N	Y	Y	Y	livestock	production and mktg.
6250602	Central and West Africa Regional	Support to Regional Organizations - OMVS	72-75	Improve capability of Senegal River development organization (OMVS) and other regional organizations to achieve development objectives.	N	N	Y	N	livestock poultry	marketing
6250610	Central and West Africa Regional	Central Veterinary Laboratory	73-78	Adequate supply of effective vaccines to Malian livestock and animal health services.	Y	N	Y	Y	livestock	vaccination
6250616	Central and West Africa Regional	OMVS Agronomic Research Project	75-78	Prepare technological package which can be used in fostering balanced increase in cereals and livestock production after regularization of river.	N	Y	Y	N	livestock	production
6250803	Central and West Africa Regional	Central Africa Livestock and Meat Production	71-78	Program for improved livestock production to producers. Producers increase capabilities of dealing w/own problem.	Y	Y	Y	Y	livestock	over-all
6260204	Niamey	Entente Livestock II	76-81	To increase efficiency/productivity of the livestock sector. Increase standard of living of small-livestock producers.	Y	Y	Y	Y	livestock	production
6310004	Cameroon	North Cameroon Livestock and Agriculture Development	78-83	Demonstrate the effectiveness of actions and local organizational structures for improving livestock and production, including measures to reduce and eventually reverse resource degradation.	Y	Y	Y	Y	livestock	production

NUMBER	COUNTRY	PROJECT TITLE	DURA-TION	PURPOSE	PROBLEM	STRATEGY	SUMMARY	OUTPUT	SPECIES	PROBLEM ADDRESS-ED, FEED-DI-SEASE-MARKET-BREEDING-ETC.
6320031	Lesotho	Thaba Bosiu Rural Development	73-78	Develop and install soil conservation infrastructure applicable. Develop program for testing conservation-oriented farming systems.	N	Y	Y	Y	livestock	management
6320048	Lesotho	Land and Water Resource Development	75-81	Sound land use and management principles and practices are understood, accepted and adopted by farmers and herdsmen.	Y	Y	Y	N	livestock	development projects
6320215	Lesotho	Land Conservation and Range Development	80-85	To conserve and develop national farmland and rangeland through conservation measures, land use plans, and land management practices.	Y	Y	Y	Y	livestock	range distribution
6330059	Botswana	Botswana Rural Man-power Development	75-75	Improve manpower capability of Government of Botswana.	N	N	Y	Y	livestock	raising
6490113	Somalia	Bay Region Ag Develop-ment	80-84	To increase agriculture production through the develop-ment of necessary institutions, personnel, and infra-structure.	N	Y	Y	Y	livestock	vaccination
6500018	Sudan	Blue Nile Agriculture Development	78-83	Development and verification of an effective and viable system approach to small farm and livestock development which will be suitable for replication over larger areas of the traditional, rainfed production sub-sector.	Y	Y	Y	Y	livestock	management
6500020	Sudan	Western Sudan Agri-culture Research	78-84	Natural resources of Western Sudan conserved and re-habilitated.	Y	N	Y	Y	livestock	production
6500103	Sudan	South Region Agri-culture Rehabilition Development	76-76	Rehabilitate agriculture and livestock activities in Southern Sudan.	Y	N	Y	Y	livestock	marketing
6630112	Ethiopia	Ethiopia-Regional Livestock Development	65-76	Increased cattle production for market results from the use of proven range and stock management practices.	Y	Y	Y	Y	livestock	over-all
6630179	Ethiopia	Upper Didesa Develop-ment	77-81	Establish comprehensive settlement/resettlement and and agriculture/rural development model.	Y	N	N	N	livestock	disease
6630214	Ethiopia	Micro Regional Rural Development	78-78	Improve agriculture and village industry productivity, health conditions, education, skills training, market activities, and roads.	N	N	Y	N	oxen	distribution
6640205	Tunisia	Agriculture Production General and Miscell. Activities	70-70	Participant training to improve extension capability - meet Ag production changes to meet production increase.	N	Y	Y	Y	livestock	over-all
6640205	Tunisia	Agriculture Production - Cereals	70-70	Livestock production practices improved in Tunisia.	Y	N	Y	Y	beef dairy poultry sheep	over-all
6640276	Tunisia	Accelerated Livestock Production	71-76	Reach small livestock farmer w/modern technology in forage production, feed utilization and livestock management.	Y	Y	Y	Y	livestock	management

NUMBER	COUNTRY	PROJECT TITLE	DURATION	PURPOSE	PROBLEM	STRATEGY	SUMMARY	OUTPUT	SPECIES	PROBLEM ADDRESSED, FEED-DISEASE-MARKET-BREEDING-ETC.
6640293	Tunisia	Livestock Feed Production Project	77-80	Reach small livestock farmer w/modern technology in forage production, feed utilization and livestock management.	Y	N	Y	Y	livestock	management
6640302	Tunisia	Small Farmer Supervised credit	78-81	Provide a supervised credit program. Improving agri production inputs - technology of small/medium farmers	N	Y	Y	N	livestock	purchases
6640316	Tunisia	INA and Faculty Development	78-78	To improve and expand the capacity of INA and to provide higher level academic training in agriculture.	N	N	N	N	-----	-----
6770201	Chad	Chad Range and Livestock Herder Training	75-79	Develop interaction between herders and government which will lead to conservation and improved use of resources and livestock	Y	Y	Y	Y	livestock	production
6820201	Mauritania	Mauritania Rural Development	75-80	Develop technically and socially sound methods for increasing crop and animal yields and generate necessary data required to launch an expansion extension program.	Y	N	Y	Y	livestock	over-all
6830202	Niger	Niger Range and Livestock Management	76-81	Prepare feasible range management plan and livestock extension to optimize animal production in pastoral zone.	Y	Y	Y	Y	livestock	over-all
6830204	Niger	Entente Livestock II	76-79	Increase efficiency and production of livestock sector and standard of living of small livestock producers. Provide continuing information.	Y	Y	Y	Y	livestock	over-all
6830205	Niger	Niamey Department Rural Development	77-80	To start a process of rural development by - motivation and organizational requirements for economic and social development - through institutional, physical and technical government capabilities.	N	N	Y	Y	livestock	over-all
6850202	Senegal	Range and Livestock Development	75-80	Replicable system of integrated range and livestock management both socially acceptable and economically viable.	Y	Y	Y	Y	livestock	management
6850224	Senegal	SODESP Livestock Production Project	79-83	Develop sound livestock production and marketing system and a resource management plan.	Y	Y	Y	[illegible]	livestock	production & marketing
6850235	Senegal	Senegal Cereals Production Project II	80-80	Improve the capability of SODEVA to reach the entire farm family with improved cultural recommendations designed to increase food production and farm incomes in the Groundnut Basin.	N	Y	Y	N	livestock	production
6860201-01	Upper Volta	Integrated Rural Development	75-80	Upgrade quality of rural life primarily by progressively increasing food supplies and surpluses which can be marketed outside ORD.	Y	Y	Y	Y	livestock	production
6860203	Upper Volta	Village Livestock	76-79	Develop capability of central livestock services and regional development organization to plan and implement village livestock management systems which maintain integrity of environment.	Y	Y	Y	Y	livestock	production

NUMBER	COUNTRY	PROJECT TITLE	DURA-TION	PURPOSE	PROBLEM	STRATEGY	SUMMARY	OUTPUT	SPECIES	PROBLEM ADDRESSED, FEED-DISEASE-MARKET-BREEDING-ETC.
6880201	Mali	Mali Livestock Development Project	75-79	Improve range management - achieve higher level of self-sustaining productivity in livestock, for export and domestic consumption.	Y	Y	Y	Y	beef	production
6880203	Mali	Mali Livestock Sector Grant	75-81	Make measurable impact toward restoration, improvement of livestock sector within period of 3-5 years.	Y	Y	Y	Y	livestock	management
6880210-01	Mali	Operation Haute Valley	78-82	To plan and manage an integrated rural development program incorporating both productivity and social components.	N	Y	Y	N	livestock	infarming system
6880215	Mali	First Region Pilot Development	79-79	Develop an integrated development strategy through pilot interventions in key sectors.	N	N	Y	Y	livestock	over-all
6900008	Southern Africa Region - OSARAC	Regional Technician Training	70-74	Train in-service agricultural extension manpower in Southern Africa region.	N	N	Y	Y	livestock	production
6900015	Southern Africa Region - OSARAC	Botswana Range and Livestock Management	73-78	A replicable system of range and livestock management developed for the small stockholder which is socially acceptable and economically viable.	Y	Y	Y	Y	livestock	management
6900027	Southern Africa Region - OSARAC	Northern Abattoir Design	76-76	Establish livestock marketing facilities and processing of raw materials within Botswana.	Y	Y	Y	Y	livestock	abattoir
6900065	Southern Africa Region - OSARAC	Farming Systems Research	78-82	To create more productive agriculture enterprise mixes which are acceptable to farmers; sensitive to management ability; appropriate to resources available and protective of land base	N	N	Y	N	livestock	ag balance
6980106	Africa Regional	Entente Fund Livestock Sector	71-71	Establish common market for meat and livestock	Y	Y	Y	N	livestock	marketing
7300291-01	Viet Nam (South Republic of)	Ag Credit Markets and Exports	----	An effective institutional infrastructure for agri business enterprises; inputs include marketing, processing, storage and export of ag products.	N	Y	N	Y	animal/ poultry	export marketing
7300315-01	Viet Nam (South Republic of)	Animal Production (Animal Health)	----	Provide adequate vaccine production and animal health services to livestock industry.	Y	Y	Y	Y	livestock	health vaccines
7300315-02	Viet Nam (South Republic of)	Animal Production	----	Increase production of livestock with emphasis on poultry eggs, and pork to meet consumer demand at consumer price.	Y	N	Y	Y	pork chicken	production
7300315-03	Viet Nam (South Republic of)	Animal Production	----	Train farmers, technicians in livestock production and feed preparation.	Y	N	Y	Y	livestock	training - over-all
9310069	Technical Assistance	International Center for Ag Research	77-81	Existing systems of crop and livestock management improved (near East and North Africa).	Y	N	Y	N	livestock	management