3801007/68
PNAAQ 007
(An: 34623

MAE MOH - BANGKOK EHV TRANSMISSION STUDY

VOLUME I

EXECUTIVE SUMMARY

PREPARED FOR

ELECTRICITY GENERATING AUTHORITY OF THAILAND
BONNEVILLE POWER ADMINISTRATION

JULY 1981

LEMCO ENGINEERS (International), Inc.
SHAH & ASSOCIATES

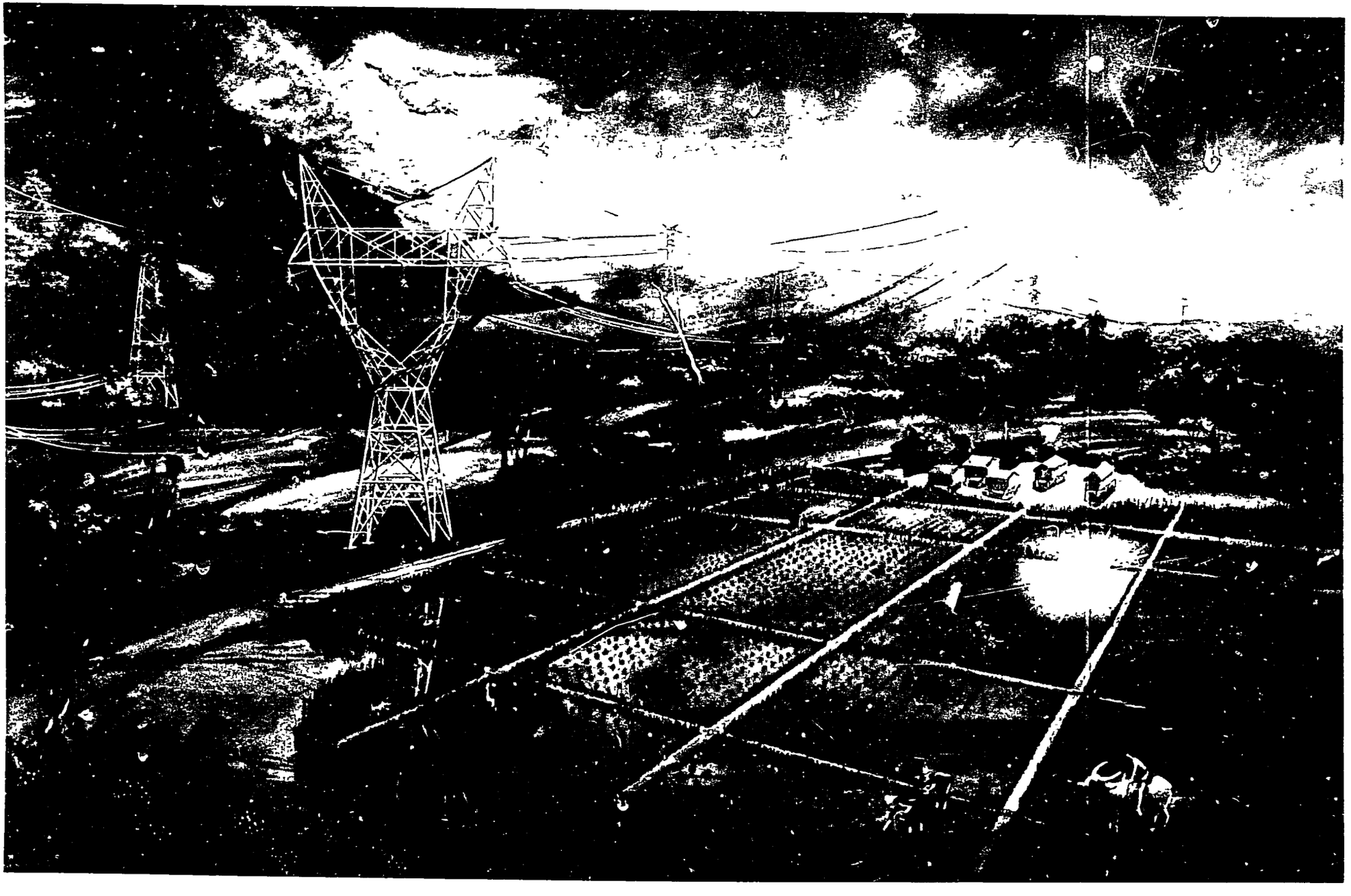

LEMCO ENGINEERS (INTERNATIONAL), INC.

P.O. BOX 28549 • WEST COUNTY BRANCH • ST. LOUIS, MISSOURI 63141

August 3, 1981

Mr. Kasame Chatikavanij
General Manager
Electricity Generating Authority
of Thailand
Nonthamburi, Thailand

Subject: Mae Moh - Bangkok EHV Transmission Project
Submittal of Final Report

Dear Mr. Kasame:

Transmitted herewith is the final report for the Mae Moh - Bangkok EHV Transmission Project. This report has been revised to include comments from your staff and is being transmitted to you as a final document.

For your convenience in reviewing the report, we have divided it into three volumes. Volume I is an executive summary, Volume II contains technical information and Volume III contains additional back-up data.

We sincerely appreciate the opportunity to work with EGAT on this project and look forward to being of further service to you.

Sincerely,

LEMCO ENGINEERS (International), Inc.

W. E. Sebastian

W. E. Sebastian
President

CONTENTS

TITLE PAGE			i
LETTER OF TRANSMITTAL			ii
CONTENTS			iii
ACKNOWLEDGEMENTS			iv
1.0	INTRODUCTION		1
	1.1	SCOPE OF WORK	1
	1.2	PURPOSE OF SUMMARY	1
2.0	POWER SYSTEM PLANS		1
	2.1	PLANNED EXPANSION	1
	2.2	PROJECTED LOAD	2
	2.3	GENERATION PLANS	2
	2.4	MAE MOH GENERATION	2
	2.5	ADDITIONAL CONSIDERATIONS	2
3.0	TRANSMISSION SYSTEMS		3
	3.1	EXISTING SYSTEM	3
	3.2	PROPOSED SYSTEMS	3
	3.3	TRANSMISSION LINE REQUIREMENTS	3
	3.4	REACTOR REQUIREMENTS	7
	3.5	SUBSTATION REQUIREMENTS	8
4.0	ENVIRONMENT		8
	4.1	ITEMS STUDIED	8
5.0	ECONOMIC EVALUATION		8
	5.1	COMBINED COST	8
	5.2	CASH FLOW REQUIREMENTS	10
6.0	CONCLUSIONS AND RECOMMENDATIONS		10
	6.1	RECOMMENDED SYSTEM	10
	6.2	RECOMMENDED PROJECT SCHEDULE	11
	6.3	CONCLUSION	11

ACKNOWLEDGEMENTS

LEMCO gratefully acknowledges the substantial assistance provided by the following persons:

BONNEVILLE POWER ADMINISTRATION

Robert Eastvedt	Chief Engineering Economics Engineer
Dean Perry	Assistant Director of Division System Engineering
Duane Birkeland	Electrical Engineer
Len Bradshaw	Electrical Engineer
Bill Middlestadt	Electrical Engineer
Richard Perlas	Electrical Engineer
Mike Raschio	Electrical Engineer
Fred Schaufelberger	Electrical Engineer

ELECTRICITY GENERATING AUTHORITY OF THAILAND

Kasame Chatikavanij	General Manager
Tongrojana Pochanart	Deputy General Manager - Technical
Srid Aphaiphuminart	Director - Planning Department
Somkiet Phaloprakarn	Assistant Director - Planning Department
Viroj Nopkhun	Chief - Power Economic and System Operation Planning Division
Siridat Glankwamndee	Chief - System Planning Division
Yongyuth Boonlapo	Chief - Economic and Investment - Policy Division
Somart Promdan	Head - Power Development & Energy Planning & Analysis Section
Prakob Dhienhirunya	Head - Power System Planning Section
Woraluk Aphaichartbuth	Economist - System Planning Division
Manit Kovintha	Head - Computer System Applications Development Section

INTERNATIONAL DEVELOPMENT COOPERATION AGENCY

Richard Kranker	Assistant Director - Asia Trade & Development Program

TESCO LIMITED

Sirchai Chai-Aya

EGAT (RETIRED)

Sonthi Keyuravong

EXECUTIVE SUMMARY

MAE MOH - BANGKOK EHV TRANSMISSION STUDY

1.0 INTRODUCTION

1.1 Scope of Work

LEMCO was commissioned to provide the Electricity Generating Authority of Thailand (EGAT) with a technical and economic evaluation of various transmission systems. The transmission system envisioned would be utilized to integrate the proposed generation expansion at Mae Moh into the existing EGAT electric transmission network. The transmission systems which were to be evaluated were based on various voltages which are utilized for bulk power transmission throughout the world and include:

- an expansion of EGAT's existing 230 kV system
- a higher standard voltage of 400 kV
- another higher standard voltage of 500 kV

An evaluation of the most viable transmission system would be utilized by EGAT to prepare their report on the total Mae Moh Project.

1.2 Purpose of Summary

This summary is a condensed version of the final results of the Interim and Final Reports, as well as a brief description of parts of the EGAT System. Its purpose is to present the reader with only the necessary information for an overall project review. More detailed information is available in the full reports and this summary is not intended in any way to replace them.

2.0 POWER SYSTEM PLANS

2.1 Planned Expansion

The planned expansion of generation and the anticipated loads to be served, which were the basis for the required transmission expansion, and hence the study, were detailed in EGAT's Power Development Plan (1979-1993).

2.2 Projected Load

EGAT periodically prepares a Power Development Plan which details the load requirements throughout their system. The most recent plan at the initiation of this study was the PDP dated January, 1980, which predicts capacity and energy requirements through 1993. These projections, which are detailed monthly for the period considered, indicate a 1993 peak load of 8,642.4 thousand kilowatts and a monthly energy consumption of approximately 4,200 million kilowatt hours.

2.3 Generation Plans

The most recent PDP utilizes generation projections which consider various availability criteria to match both the peak system load and monthly system energy requirements to the expected generation availability. This criteria considers the projected availability of both peak and base load hydro and pumped storage, as well as peak and base load thermal and internal combustion generation. In providing the needed generation facilities to provide the projected power and energy requirements, EGAT has planned an additional 25 generating units which are scheduled to be in-service between 1986 and 1993.

2.4 Mae Moh Generation

This study was commissioned to study a new transmission system which would be required to transmit the power generated by at least four of the scheduled generating units. These units are planned to be base load, lignite-fired, 300 megawatts each and will be located at the lignite mine at Mae Moe. These units designated Mae Moe 6,7,8 and 9 were scheduled for commissioning in September, 1986; March, 1987; September, 1987; and September, 1988 respectively.

2.5 Additional Considerations

The transmission system ultimately utilized is also expected to have a significant interface with the transmission system utilized for additional and subsequent generation facilities which EGAT has planned. These plans include an additional four units of coal-fired or two nuclear units near Ao Phai. These units are planned at 500 megawatts each if coal-fired or 1000 megawatts each if nuclear, and are planned to provide an additional 1000 MW in October, 1990 and in April, 1992.

EGAT also anticipates that the Mae Moh lignite reserves will support additional generation and accordingly has instructed that additional 300 megawatt units be studied at Mae Moh. The units would provide an additional 1200 megawatts of generation during the period following the Ao Phai generation; possibly 1994 through 2000.

3.0 TRANSMISSION SYSTEMS

3.1 Existing System

The existing transmission network currently utilizes three voltages consisting of 69 kV, 115 kV and 230 kV. These voltages are presently used to transmit bulk power throughout the country. It should be noted also that by far the largest single concentrated load is the Bangkok area.

3.2 Proposed Systems

LEMCO was assigned to prepare a study on the use of 230 kV, 400 kV and 500 kV to transmit power from the new units at Mae Moh to Bangkok through a substation at Min Buri. In order to feed the increasing power needs of Region 4, an intermediate substation is to be installed at Chum Saeng. An analysis was done for each of the three transmission systems. The analyses were done on the basis of technical feasibility and economic impact. The results of these analyses are given in the information that follows.

3.3 Transmission Line Requirements

In order to determine the requirements of each voltage system, load flow and stability studies were made for each system voltage and for a specific time reference, which was determined by the installation of generation facilities at Mae Moh. These studies yielded the information shown in Table 3-2.

FIGURE 3-1

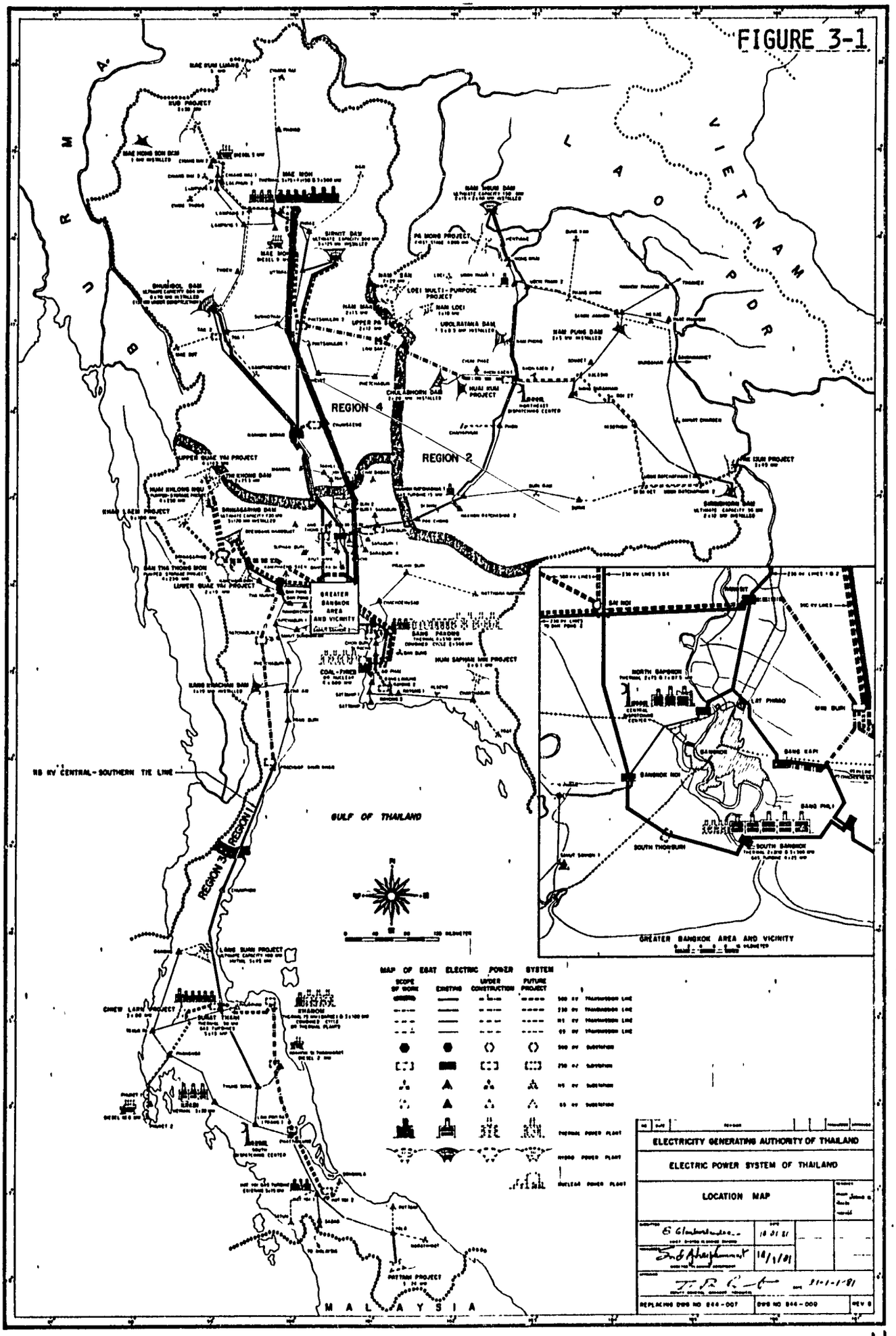
MYANMAR
LAOS
VIETNAM
CAMBODIA
MALAYSIA
GULF OF THAILAND
REGION 4
REGION 2
REGION 1
REGION 3
GREATER BANGKOK AREA AND VICINITY
NORTH BANGKOK
SOUTH BANGKOK
SOUTH THONBURI
BANGKOK NOI
BANG KAPI
BANG PHLI
LAT PHRAO
BANGKOK
MAP OF EGAT ELECTRIC POWER SYSTEM
SCOPE OF WORK
EXISTING
UNDER CONSTRUCTION
FUTURE PROJECT
500 KV TRANSMISSION LINE
230 KV TRANSMISSION LINE
115 KV TRANSMISSION LINE
69 KV TRANSMISSION LINE
500 KV SUBSTATION
230 KV SUBSTATION
115 KV SUBSTATION
69 KV SUBSTATION
THERMAL POWER PLANT
HYDRO POWER PLANT
NUCLEAR POWER PLANT
ELECTRICITY GENERATING AUTHORITY OF THAILAND
ELECTRIC POWER SYSTEM OF THAILAND
LOCATION MAP
REPLACING DWG NO 844-007
DWG NO 844-009
REV 0

TABLE 3-2

LOAD FLOW AND STABILITY STUDIES - 230 kV SYSTEM

YEAR	MAE MOH GENERATION	FACILITIES REQUIRED
1986	300 MW	2 - 230 kV LINES MAE MOH - CHUM SAENG - MIN BURI 1 - 230 kV LINE CHUM SAENG - NAKON SAWAN
1987	900 MW	4 - 230 kV LINES MAE MOH - CHUM SAENG - MIN BURI 1 - 230 kV LINE CHUM SAENG - NAKON SAWAN
1988	1200 MW	4 - 230 kV LINES MAE MOH - CHUM SAENG - MIN BURI 1 - 230 kV LINE CHUM SAENG - NAKON SAWAN
1995	2400 MW	5 - 230 kV LINES MAE MOH - CHUM SAENG - MIN BURI 2 - 230 kV LINES CHUM SAENG - NAKON SAWAN

LOAD FLOW AND STABILITY STUDIES - 400 kV SYSTEM

YEAR	MAE MOH GENERATION	FACILITIES REQUIRED
1986	300 MW	1 - 400 kV LINE MAE MOH - CHUM SAENG - MIN BURI 1 - 230 kV LINE CHUM SAENG - NAKON SAWAN
1987	900 MW	2 - 400 kV LINES MAE MOH - CHUM SAENG - MIN BURI 1 - 230 kV LINE CHUM SAENG - NAKON SAWAN
1988	1200 MW	2 - 400 kV LINES MAE MOH - CHUM SAENG - MIN BURI 1 - 230 kV LINE CHUM SAENG - NAKON SAWAN
1995	2400 MW	3 - 400 kV LINES MAE MOH - CHUM SAENG - MIN BURI 2 - 230 kV LINES CHUM SAENG - NAKON SAWAN

LOAD FLOW AND STABILITY STUDIES - 500 kV SYSTEM

YEAR	MAE MOH GENERATION	FACILITIES REQUIRED
1986	300 MW	1 - 500 kV LINE MAE MOH - CHUM SAENG - MIN BURI 1 - 230 kV LINE CHUM SAENG - NAKON SAWAN
1987	900 MW	2 - 500 kV LINES MAE MOH - CHUM SAENG - MIN BURI 1 - 230 kV LINE CHUM SAENG - NAKON SAWAN
1988	1200 MW	2 - 500 kV LINES MAE MOH - CHUM SAENG - MIN BURI 1 - 230 kV LINE CHUM SAENG - NAKON SAWAN
1995	2400 MW	2 - 500 kV LINES MAE MOH - CHUM SAENG - MIN BURI 2 - 230 kV LINES CHUM SAENG - NAKON SAWAN

3.3.1 Tower Configuration

In addition to the number of lines required, a considerable effort was expended to determine the optimum transmission tower configuration. The choices available were narrowed into three possibilities which are described as Double Circuit Vertical Configuration, Double Circuit Delta Configuration, and Single Circuit Towers. The final choice was single circuit towers based on considerations of system reliability. See Figure 3-3.

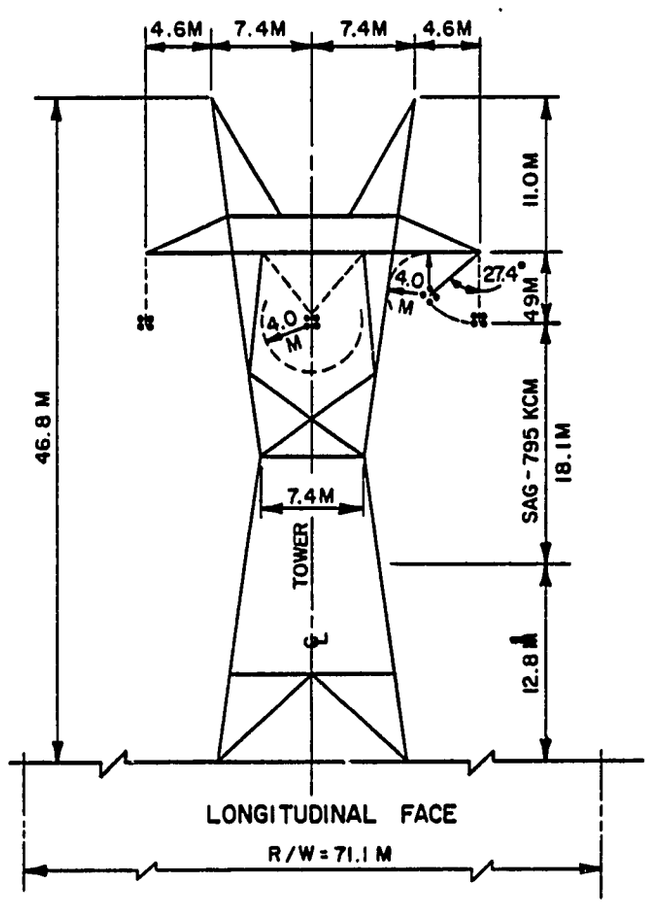

FIGURE 3-3

SINGLE CIRCUIT 500 kV BASE TOWER

3.3.2 Conductor Size and Ruling Span

Studies were made to determine the optimum design for conductor size and ruling span. The 230 kV transmission line designs currently utilized by EGAT were upgraded for the study to enable the 230 kV alternative to be more competitive with the higher voltages being considered. The following conductor sizes were studied for the 400 kV and 500 kV systems at ruling spans of 245, 365 and 490 M. All conductors are type ACSR.

TABLE 3-4

CONDUCTOR SIZES

TOWER TYPE	230 kV	400 kV	500 kV
Single Circuit	2-1272 KCM	2- 795 KCM 2-1272 KCM	4- 795 KCM 3-1272 KCM
Double Circuit	2-1272 KCM	2- 795 KCM 2-1272 KCM	4- 795 KCM* 3-1272 KCM

*ONE CIRCUIT INSTALLED

The results of these studies indicated that the most economical system to install was 795 KCM conductor with a ruling span of 490 M on a 500 kV system.

3.4 Reactor Requirements

Due to the length of the EHV line, the system under consideration would require a significant amount of shunt reactors to prevent rising voltages caused by line charging current. To compensate for this, it is recommended that the amount of reactor required for maximum line loading be permanently connected to the transmission line. The additional amount of reactors required between maximum and minimum line loading, would be connected to the EHV transformers' tertiary windings provided that the MVA rating of the winding is of sufficient capacity to accommodate the reactors.

Final recommendations on the exact reactor installation details can be made only after additional transient network analysis (TNA), load flow and economic studies are made, which are beyond the scope of these present studies.

3.5 Substation Requirements

Since the substation requirements vary according to the number of terminals required at each voltage level, substation layouts were made for the 400 kV and 500 kV systems according to the requirements shown in Paragraph 3.3. The 230 kV substation layout was not made as the information necessary for pricing was available from EGAT and it had become apparent from our studies that economically the 230 kV system was not going to be a viable alternative.

4.0 ENVIRONMENT

4.1 Items Studied

To determine the environmental impact the EHV system would produce, different conductor sizes and configurations were studied to obtain values for the following:

- Electric Field
- Radio Interference
- Audible Noise Level

The studies indicated that the levels to be expected in the final design are acceptable and the supporting data is contained in the Appendix.

5.0 ECONOMIC EVALUATION

5.1 Combined Cost

The cost comparison of the three voltage levels can be summarized in Table 5-1. Reactor and generator transformer costs are included in the substation prices. All figures are in 1980 million Bahts and include the equipment required through 1988.

TABLE 5-1

	230 kV		400 kV		500 kV	
	F. C.	L. C.	F. C.	L. C.	F. C.	L. C.
SUBSTATIONS						
MAE MOH	380.7	118.2	551.7	190.0	623.4	211.9
CHUM SAENG	119.2	58.1	288.7	139.2	365.1	147.1
MIN BURI	117.3	42.1	392.0	158.7	385.0	166.3
SUBTOTAL	617.2	218.4	1232.4	487.9	1373.5	525.3
T - LINES	2105.4	2509.1	1484.0	2010.8	2162.0	2244.0
TOTAL	2722.6	2727.5	2716.4	2498.7	3535.5	2769.3
TOTAL F. C. & L. C.	5450.1		5215.1		6304.8	

F. C. = FOREIGN CURRENCY (MB)
L. C. = LOCAL CURRENCY (MB)

If Units 10 through 13 are installed between 1988 and 1995, the additional costs would be 1924.1 MB for 230 kV, 2226.9 MB for 400 kV and 538.2 MB for the 500 kV systems.

The present value of the cost stream for each system based on various discount rates over the expected 25 year life of each system are shown in Table 5-2. Figures are in 1980 million Bahts and include the expansion planned through 1995.

TABLE 5-2

DISCOUNT RATE	230 kV	400 kV	500 kV
8%	6552.1	6338.2	4687.0
10%	5680.9	5363.5	4375.7
12%	4969.2	4706.2	4053.2
14%	4392.5	4135.6	3759.7

5.2 Cash Flow Requirements

The 500 kV system is the most economical of the three systems proposed and the supporting data is in the report. For the benefit of the reader, we are presenting here the cash flow requirements of the 500 kV system.

TABLE 5-3

CASH FLOW REQUIREMENTS
(1980)

x 1,000,000

	1981	1982	1983	1984	1985	1986	TOTAL
F.C. $(US)	1.8	1.8	31.9	91.3	46.9	3.3	177.0
L.C. ฿(THAI)	27.7	238.8	685.1	1023.7	600.1	193.9	2769.3

6.0 CONCLUSIONS AND RECOMMENDATIONS

6.1 Recommended System

In view of the data presented herein and the more extensive discussion contained in Volume II of the Final Report, we recommend that 500 kV be the transmission voltage utilized for the Mae Moh - Bangkok Transmission System. This transmission system should be constructed to place the initial portion in-service with the commissioning of Mae Moh Unit 6 in September, 1986.

The initial system would consist of substation terminals at Mae Moh Generating Station, at an intermediate location at Chum Saeng and at Min Buri near Bangkok. Each of these substations would have transformation capacity enabling power to flow from the main 500 kV system into the 230 kV system at each of these locations. With the commissioning of Unit 6 at Mae Moh a single circuit 500 kV transmission line would be utilized to carry power from the Mae Moh Generating Station to the other two substations in this network.

With the commissioning of Mae Moe Unit 7 in March, 1987 another single circuit 500 kV transmission line should be placed in-service between Mae Moh and Chum Saeng and Min Buri. We anticipate each of these lines

would be 550 kM in total length; with each line extending 315 kM between Mae Moh and Chum Saeng and 235 kM between Chum Saeng and Min Buri.

Volume II of the Final Report contains specific recommendations concerning the equipment and design to be utilized for each phase of the project. It also details reactance and transformer capacity which will be required as additional generation is added to the Mae Moh Plant.

This 500 kV system will then efficiently serve the anticipated Mae Moh generation for the planned 1200 MW through 1993 and with other small additions will transmit the anticipated Mae Moh additions after 1993.

6.2 Recommended Project Schedule

To provide the 500 kV system for commissioning in September, 1986 concurrent with Mae Moh Unit 6 we have prepared the enclosed Schedules 6-2. These schedules anticipate the initiation of transmission line route selection and environmental assessment in 1981.

6.3 Conclusion

We believe that a thorough analysis has been made and all the requirements given to us by the Bonneville Power Administration and EGAT have been fulfilled. The recommendation given above is the culmination of a thorough study of the situation as it was given to us by BPA and EGAT, whose assistance and cooperation is hereby gratefully acknowledged. The 500 kV system recommended should serve EGAT well in the years ahead and provide the initial step for a future extensive 500 kV transmission network.

The 1988 configuration of lines and substations will be as shown on Figure 6-1.

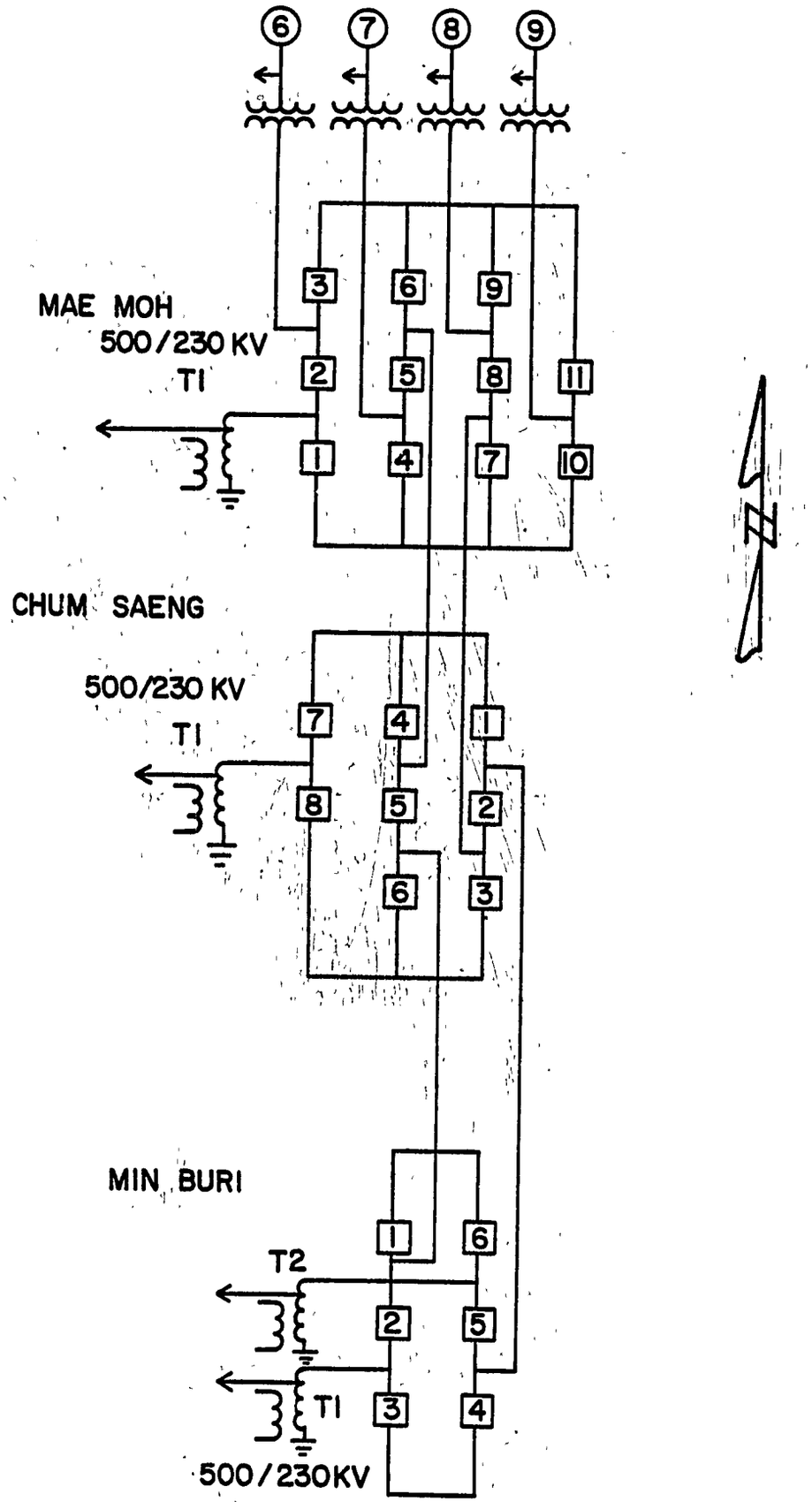

FIGURE 6-1

MAE MOH - BANGKOK 500 kV TRANSMISSION SYSTEM

MAE MOH-BANGKOK 500 KV TRANSMISSION PROJECT

TRANSMISSION LINES

LEMCO ENGINEERS (INTERNATIONAL), INC.
ST LOUIS, MISSOURI
SHEET 1 OF 3

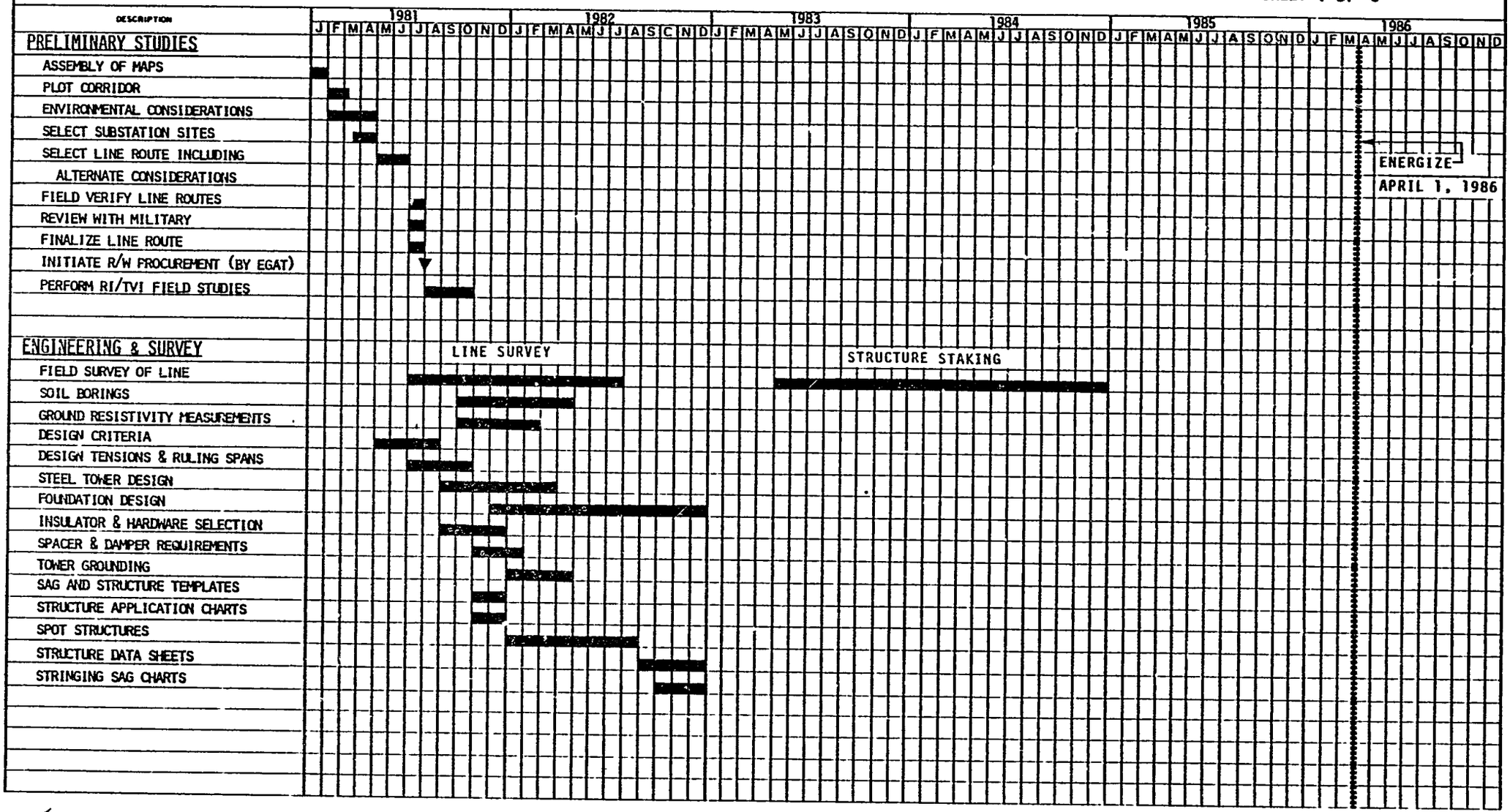

13

FIGURE 6-2

MAE MOH-BANGKOK 500 KV TRANSMISSION PROJECT

TRANSMISSION LINES

LEMCO ENGINEERS (INTERNATIONAL), INC.
ST LOUIS, MISSOURI
SHEET 2 OF 3

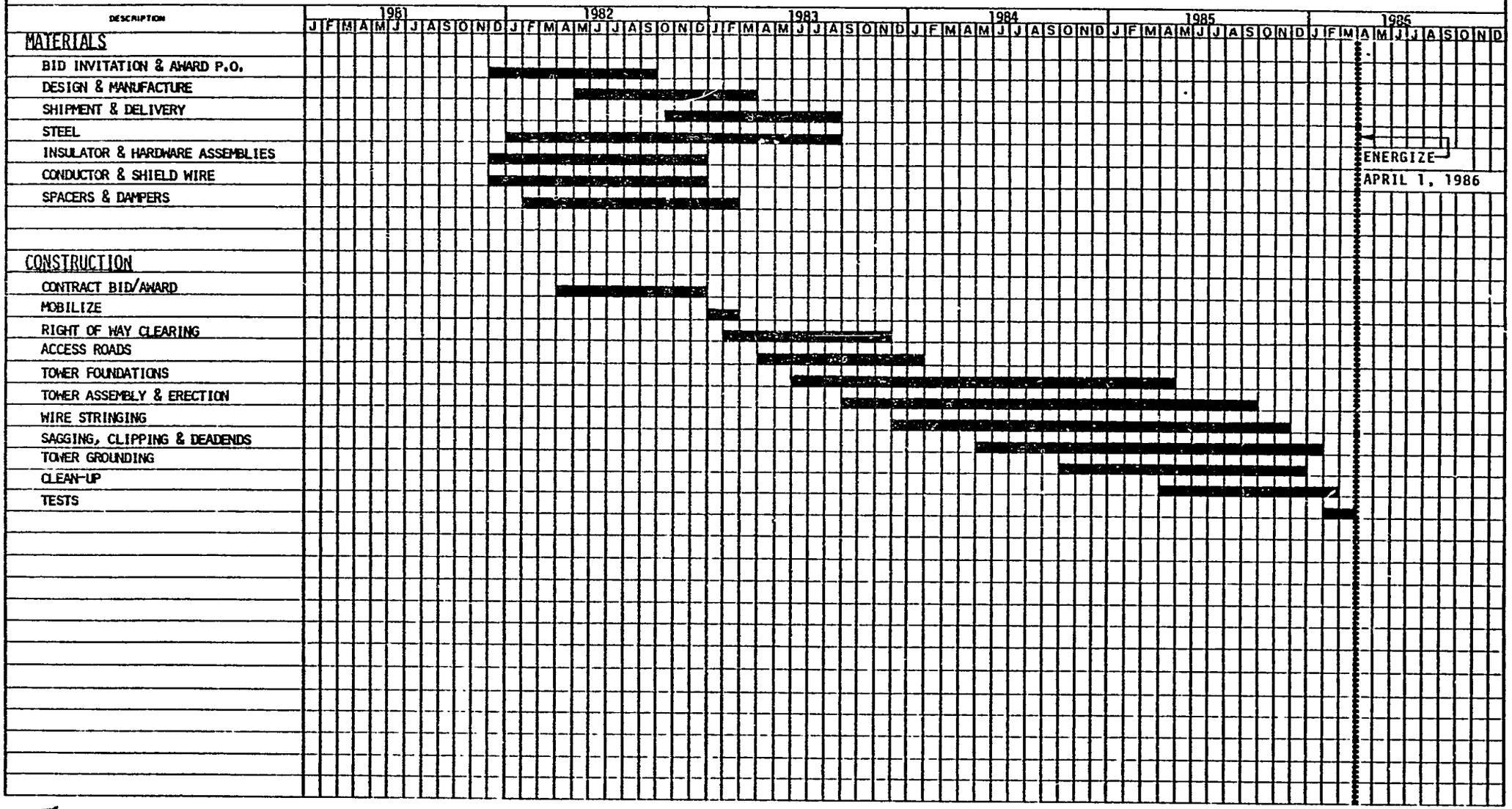

FIGURE 6-2

MAE MOH-BANGKOK 500 KV TRANSMISSION PROJECT

LEMCO ENGINEERS (INTERNATIONAL), INC.
ST LOUIS MISSOURI
SHEET 3 OF 3

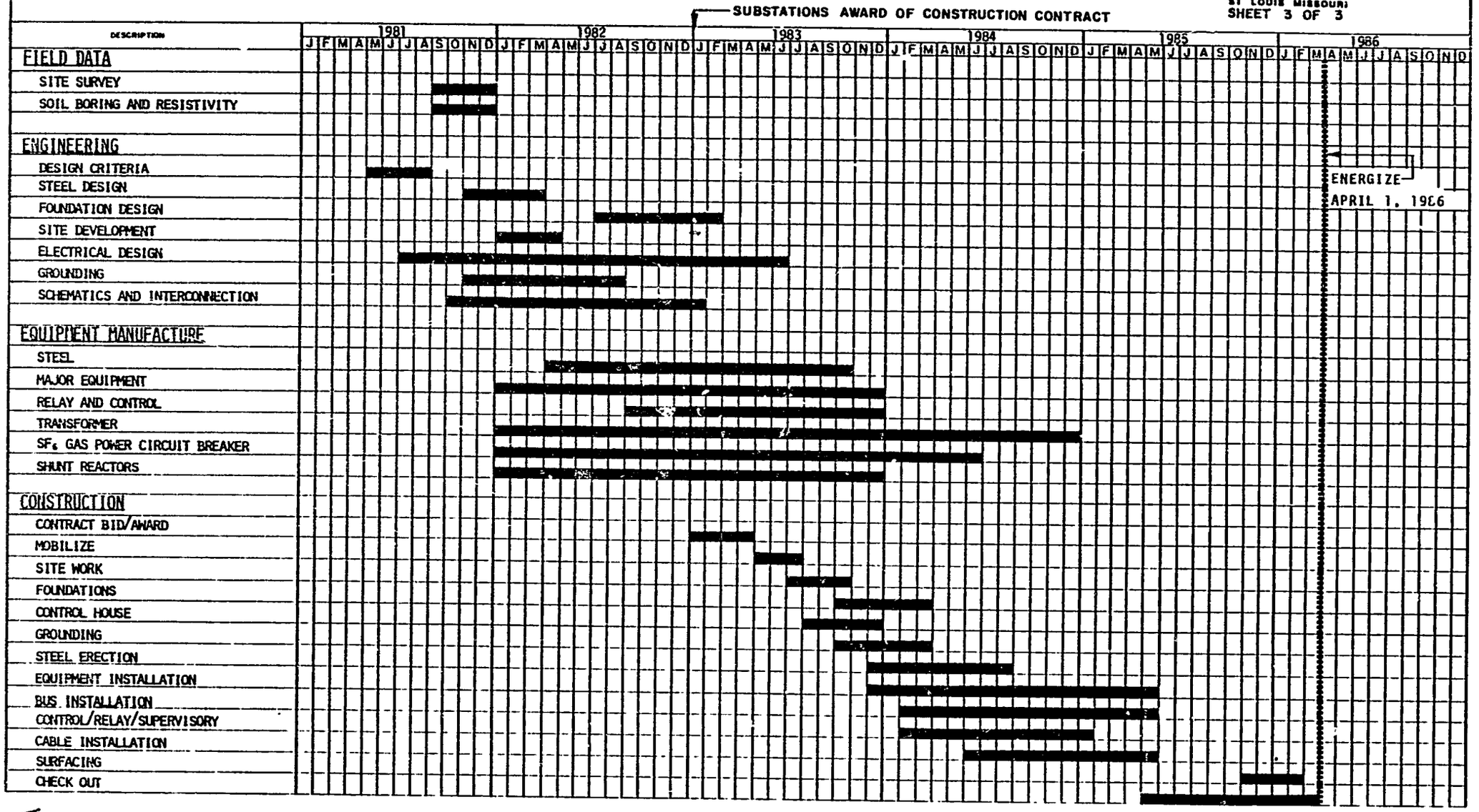

FIGURE 6-2

MAE MOH - BANGKOK EHV TRANSMISSION STUDY

WITH ALTERNATIVE GENERATION SCHEDULE

VOLUME II

FINAL REPORT

PREPARED FOR

ELECTRICITY GENERATING AUTHORITY OF THAILAND
BONNEVILLE POWER ADMINISTRATION

AUGUST 1981

LEMCO ENGINEERS (International), Inc.
SHAH & ASSOCIATES

16

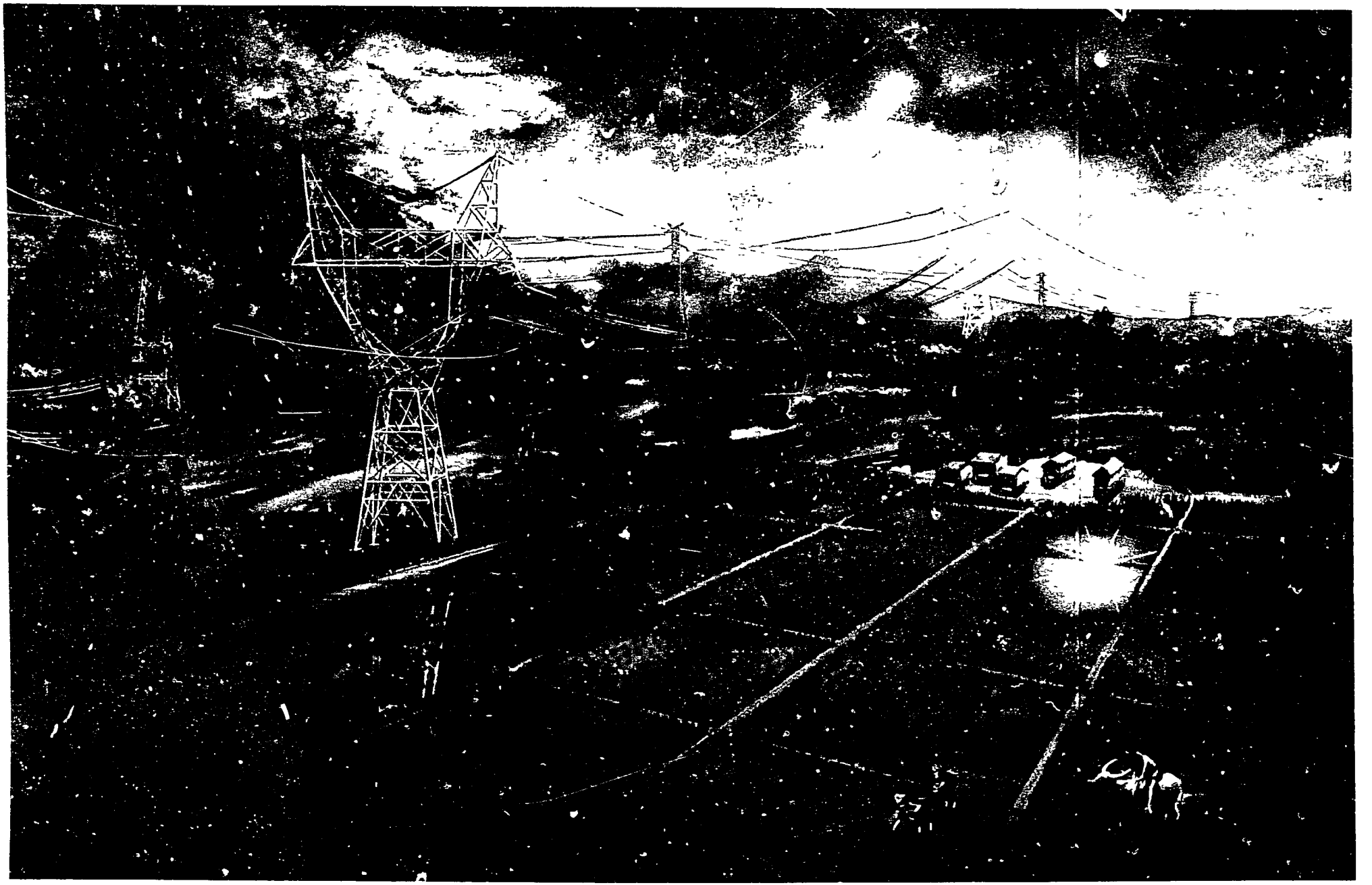

FINAL REPORT

MAE MOH - BANGKOK EHV TRANSMISSION STUDY

WITH ALTERNATIVE GENERATION SCHEDULE

AUTHORITY

PREPARED FOR:

The United States Department of Energy, Bonneville Power Administration under Contract DE-AC79-80BP-20797, M004 dated 8 April, 1981

18

LEMCO ENGINEERS (INTERNATIONAL), INC.

P.O. BOX 28549 • WEST COUNTY BRANCH • ST. LOUIS, MISSOURI 63141

August 14, 1981

Mr. Kasame Chatikavanij
General Manager
Electricity Generating Authority
of Thailand
Nonthamburi, Thailand

Subject: Mae Moh - Bangkok EHV Transmission Study
with Alternative Generation Schedule
Submittal of Final Report

Dear Mr. Kasame:

Transmitted herewith is the Final Report for the Mae Moh - Bangkok EHV Transmission Study with Alternative Generation Schedule. This report has been revised to include comments from your staff and is being transmitted to you as a final document.

For your convenience in reviewing the report, we have divided it into three volumes. Volume I is an Executive Summary, Volume II provides the technical information, and Volume III contains additional back-up data.

We sincerely appreciate the opportunity to work with EGAT on this project and look forward to being of further service to you.

Sincerely,

LEMCO ENGINEERS (International), Inc.

W. E. Sebastian

W. E. Sebastian
President

A SUBSIDIARY OF LEMCO ENGINEERS, INC., ST. LOUIS, MISSOURI

CONTENTS

TITLE PAGE			i
AUTHORITY			ii
LETTER OF TRANSMITTAL			iii
CONTENTS			iv
ACKNOWLEDGEMENTS			vi
OBJECTIVES			vii
1.0	CONCLUSIONS AND RECOMMENDATIONS		1-1 thru 1-9
	1.1	GENERAL	1-1
	1.2	SUMMARY	1-2
	1.3	RECOMMENDED ADDITIONAL STUDIES	1-9
2.0	INTRODUCTION		2-1 thru 2-9
	2.1	GENERAL	2-1
	2.2	TRANSMISSION SYSTEM DEVELOPMENT	2-3
	2.3	LOAD PROJECTION	2-7
	2.4	GENERATION SEQUENCE	2-7
3.0	SYSTEM PLANNING STUDIES		3-1 thru 3-65
	3.1	INTRODUCTION	3-1
	3.2	DISCUSSION OF RESULTS	3-5
	3.3	TRANSIENT STABILITY STUDIES	3-9
	3.4	CONCLUSIONS AND RECOMMENDATIONS	3-10
4.0	PRELIMINARY DESIGNS - TRANSMISSION LINES		4-1 thru 4-17
	4.1	GENERAL	4-1
	4.2	ELECTRICAL CRITERIA	4-3
	4.3	MECHANICAL CRITERIA	4-7
	4.4	RIGHT-OF-WAY CONSIDERATIONS	4-16

CONTENTS

5.0	PRELIMINARY DESIGNS - SUBSTATIONS		5-1 thru 5-46
	5.1	GENERAL	5-1
	5.2	SUBSTATION DEVELOPMENT	5-3
	5.3	PHYSICAL DESIGN	5-6
	5.4	REACTOR INSTALLATION	5-9
	5.5	PROTECTIVE RELAY SYSTEM DESCRIPTION	5-36
	5.6	COMMUNICATIONS STUDY	5-41
6.0	ECONOMIC ANALYSIS		6-1 thru 6-9
	6.1	SYSTEM GENERATION SCHEDULE	6-1
	6.2	SYSTEM COST COMPONENTS	6-2
	6.3	ALTERNATIVE TRANSMISSION SYSTEMS	6-2
	6.4	COST STREAM ANALYSIS	6-6
	6.5	COST STREAM CALCULATIONS	6-8
7.0	COST ESTIMATES AND ANNUAL OBLIGATIONS		7-1 thru 7-8
	7.1	COST ESTIMATES	7-1
	7.2	SYSTEM COST DISBURSEMENTS	7-8
8.0	CONSTRUCTION SCHEDULES		8-1 thru 8-2

BIBLIOGRAPHY

ACKNOWLEDGEMENTS

LEMCO gratefully acknowledges the substantial assistance provided by the following persons:

BONNEVILLE POWER ADMINISTRATION

Robert Eastvedt	Chief Engineering Economics Engineer
Dean Perry	Assistant Director of Division System Engineering
Duane Birkeland	Electrical Engineer
Len Bradshaw	Electrical Engineer
Bill Middlestadt	Electrical Engineer
Richard Perlas	Electrical Engineer
Mike Raschio	Electrical Engineer
Fred Schaufelberger	Electrical Engineer

ELECTRICITY GENERATING AUTHORITY OF THAILAND

Kasame Chatikavanij	General Manager
Tongrojana Pochanart	Deputy General Manager - Technical
Srid Aphaiphuminart	Director - Planning Department
Somkiet Phaloprakarn	Assistant Director - Planning Department
Viroj Nopkhun	Chief - Power Economic and System Operation Planning Division
Siridat Glankwamndee	Chief - System Planning Division
Yongyuth Boonlapo	Chief - Economic and Investment - Policy Division
Somart Promdan	Head - Power Development & Energy Planning & Analysis Section
Dhienhirunya	Head - Power System Planning Section
Woraluk Aphaichartbuth	Economist - System Planning Division
Manit Kovintha	Head - Computer System Applications Development Section

INTERNATIONAL DEVELOPMENT COOPERATION AGENCY

Richard Kranker	Assistant Director - Asia Trade & Development Program

OBJECTIVES

The objectives for this, the second study of the required system, are set forth in the Scope of Work which is quoted as follows:

> "To provide a technical and economic evaluation of a 500 kV transmission system to intergrate the generation of the Mae Moh Project into the EGAT system. The study shall consider the proposed generation as outlined in EGAT Power Development Plan (1980-1993) - December 1980 commencing with Mae Moh Unit 6 and including Coal Fired Units 1-4 at Ao Phai.
>
> The results of the study will be used by EGAT to prepare their report on the total Mae Moh Project."

1.0 CONCLUSIONS AND RECOMMENDATIONS

1.1 GENERAL

We are providing herein the results of our study of the Mae Moh - Bangkok Transmission System.

This study was undertaken to determine the optimum 500 kV system to transmit the power generated at Mae Moh Power Plant to the greater Bangkok area. It utilizes the main results of our previous study of the Mae Moh - Bangkok EHV Transmission System, and develops them further for the various construction phases. It was proven in the first study that both 500 and 400 kV operating voltages require the same number of lines (two) to interconnect Mae Moh with Bangkok in the early stages of Mae Moh Power Plant development (2 x 150 MW and 4 x 300 MW units). However, should additional generation be connected to the Mae Moh buses, whether it uses additional 300 MW units or Ing Yom hydro complex generation, it would necessitate the construction of the third 400 kV line, which makes 500 kV transmission system the most economical and technically appropriate. Therefore, our present study has not considered a 400 kV transmission system as a viable alternate.

The present study reflects the changes in the generation schedule, formulated in the new EGAT Power Development Plan (Reference 2). The major changes which were included in our study are as follows:

- Ao Phai Coal-Fired Plant (4 x 600 MW Units) was incorporated in the system planning studies. Two 500 kV lines will interconnect Ao Phai with an EHV substation in the Bangkok area (Min Buri);

- Two additional 500 kV lines will tie Min Buri with another EHV substation located to the west of Bangkok (Sai Noi), for future interconnection with the western hydro complex;

- Ing Yom hydro project was included in the transmission study for the purpose of checking whether the Mae Moh - Min Buri EHV transmission system is capable of accommodating future hydro generation in the north of the country.

In our study we have also investigated the advisability of transmitting Mae Moh power via 500 kV transmission lines initially operated at 230 kV as described in Sections 5 and 6.

Various load flow and stability studies have been undertaken to establish a set of technially viable alternates. Economic comparisons have been made of the different alternatives for the gradual transmission system development, and the most economical and technically sound system has been recommended.

1.2 SUMMARY

System planning studies for the Mae Moh - Bangkok Transmission System cover a period of seven years, beginning in September 1986, which is the in-service date of Mae Moh Unit 6.

The following logical sequence has been used in deriving the recommended system development plan.

1.2.1 Load flow and stability studies have determined that the ONLY appropriate operating voltage for the subject transmission system in the year 1993 is 500 kV. It has been established that the Mae Moh - Bangkok transmission facilities in 1993 will be comprised of the following:

- Installed generating capacity at Mae Moh power plant of 1725 MW (3 x 300 MW, 4 x 150 MW and 3 x 75 MW units);

- Two 500 kV single circuit lines, each with 4 x 795 MCM ACSR conductors per phase. The transmission lines extend between the Mae Moh switchyard and the Chum Saeng intermediate substation and end at the Min Buri substation, where the power will be distributed to various 230 kV substations in the EGAT network.

- Two 230 kV lines, each with 2 x 1272 MCM ACSR conductors per phase are required between Chum Saeng and Nakhon Sawan.

25

In 1993 the Ao Phai coal-fired plant (installed capacity: 2400 MW) will be incorporated into the EGAT System by two 500 kV lines to Min Buri and two 500 kV lines from Min Buri to Sai Noi.

The Ing Yom hydro complex (installed capacity: 600 MW) will be interconnected with Mae Moh via two 230 kV lines from Sua Ten Dam.

1.2.2 Similarly, we have determined from the results of the load flow and stability studies that 500 kV becomes THE ONLY appropriate transmission system voltage in the year 1991. However, the second 500 kV line between Chum Saeng and Min Buri is not required for the years 1991 and 1992.

Installed generating capacity of the major power plants, related to the subject project, for the years 1991 and 1992 is as follows:

	1991	1992
Mae Moh	1425 (3x75 MW 4x150 MW 2x300 MW)	1725 MW (3x75 MW 4x150 3x300 MW)
Ao Phai	1200 MW (2x600 MW)	1800 MW (3x600 MW)
Ing Yom	150 MW (70 MW 80 MW)	150 (70 MW 80 MW)

1.2.3 Despite the necessity for 500 kV in the years 1991, 1992 and 1993, the load flow and stability studies have not disqualified 230 kV alternative systems for the years 1986 through 1990. For these early stages of the Mae Moh power plant development (825 MW through 1125 MW) both 500 kV and alternative 230 kV (built as 500 kV but operated at 230 kV) systems are technically sound, meet system planning criteria, and offer a high degree of reliability and flexibility in the system operation.

Our study has considered three alternative system development plans:

- The transmission system could be constructed and operated at 500 kV from the very beginning.

26

- The transmission system could be constructed as 500 kV but initially operated at 230 kV - ALTERNATE 1. Incorporated in this alternate are special generator step-up transformers, which would be used for Mae Moh Unit No. 8. These would consist of single phase transformers with double high voltage windings suitable for operation at either 500 or 230 kV, and initially operated at 230 kV. Power circuit breakers would be purchased for 230 kV, installed, and connected to substation buses designed and built as required for the final 500 kV substation.

- The transmission system could be constructed as 500 kV but initially operated at 230 kV - ALTERNATE 2. According to this alternate, generator step-up transformer for Mae Moh Unit No. 8 will be for single voltage operation at 500 kV. They would be connected to a 500 kV bus and then stepped down through a 400 MVA autotransformer to 230 kV. Line terminals will be built in the existing 230 kV switchyard.

It should be understood that both 230 kV alternates differ with regard to the Mae Moh substation arrangement. As described in Section 6, we have performed an economic comparison of both 230 kV alternates and eliminated Alternate 1, since its capital cost as well as present worth is higher than for Alternate 2.

Then, the 500 kV system and the 230 kV Alternate 2 system were subjected to the detailed cost stream analysis, based on the total capital cost, construction cost, estimated losses, and operation and maintenance costs of each system.

To provide an appropriate technical basis for the economic analysis, we have originated preliminary designs of the transmission facilities required, which are described in Sections 4 and 5.

Table 1-1 describes the gradual development of the alternative systems at the early stages of the Mae Moh power plant development.

27

TABLE 1-1

YEAR	GENERATION	TRANSMISSION LINES WITH 4x795 MCM ACSR 230 kV MM - CS	230 kV CS - MB	500 kV MM - CS	500 kV CS - MB
SEP 1986	MAE MOH: 675 MW	-	-	-	-
DEC 1986	MAE MOH: 825 MW	1-230 kV	-	1-500 kV	-
AUG 1987	MAE MOH: 1125 MW	2-230 kV	-	2-500 kV	-
1988	MAE MOH: 1125 MW AO PHAI: 600 MW	2-230 kV	1-230 kV	2-500 kV	1-500 kV
1989	MAE MOH: 1125 MW AO PHAI: 1200 MW	2-230 kV	1-230 kV	2-500 kV	1-500 kV
OCT 1991	MAE MOH: 1425 MW AO PHAI: 1200 MW ING YOM: 150 MW	CONVERSION TO 500 kV WITH 2-500 kV	1-500 kV	2-500 kV	1-500 kV

The 230 kV alternate will be converted into a 500 kV system with two 500 kV lines from Mae Moh to Chum Saeng and one 500 kV line from Chum Saeng to Min Buri in year 1991.

It is obvious from the transmission line standpoint that both the 500 kV and the 230 kV alternates, as described in Table 1-1, are absolutely identical. However, as far as substation equipment, system losses and reactive requirements are concerned, they differ substantially.

Detailed discussion of the gradual substation development for each system alternate is described in Section 5.2.

It should be noted that certain portions of the substation components for Min Buri Substation were not included in substation cost estimate, since they would be allocated to the Ao Phai and Sai Noi Projects.

Economic analysis of both alternates has led us to the conclusion that the 500 kV system, when constructed and operated at 500 kV for its entire life, exhibits the LOWEST PRESENT WORTH on its cost stream of any other alternative system.

28

The present values of each alternative system have been computed for 8%, 10% and 12% discount rates and based on 1980 prices (in Million Bahts) and the results are summarized in the following table.

1980 PRESENT VALUE OF ALTERNATIVE TRANSMISSION SYSTEMS

DISCOUNT RATE	INITIAL 500 kV	INITIAL 230 kV
8%	3895.1	3993.6
10%	3539.9	3583.5
12%	3214.8	3216.3

Results indicate the 500 kV alternate is the more economical. Although the difference in the present values of the above alternatives computed for 12% discount rate is very insignificant, we would like to emphasize an important factor, which makes the 500 kV system even more advantageous. This factor is the complexity of conversion of the 230 kV substation into 500 kV, whih may result in the interruption of the power supply and makes construction work more complicated.

Based on the above, we recommend construction and operation of a 500 kV system with in-service dates commencing with the installation of Mae Moh Unit 7 (December 1986).

Table 1-2 summarizes the recommended 500 kV system development plan.

As discussed in Section 3 we are recommending the first line from Mae Moh to Chum Saeng to be constructed by December 1986 in order to avoid overload of one of the 230 kV lines from Mae Moh to Phitsanulok 2 in case of the outage of the second line.

The addition of the second line from Mae Moh to Chum Saeng is required in August 1987 since the system proved to be unstable for a fault at Mae Moh without the second line.

We are recommending to complete construction of the first line from Chum Saeng to Min Buri in 1988 in order to avoid overload on one of the 230 kV lines from Chum Saeng to Nakhon Sawan when the second line is out of service.

29

It should be noted that overload of the above lines was determined in accordance with the conservative system planning criteria described in Appendix 1. Hence, by approaching the system planning less conservatively, EGAT would be able to postpone the construction of the first lines from Mae Moh to Chum Saeng and from Chum Saeng to Min Buri for eight months and two to three years respectively.

For the Mae Moh - Bangkok Transmission System our study recommends breaker-and-a-half switching arrangements for Mae Moh, Chum Saeng and Min Buri Substation.

Substation equipment rating and transmission line parameters are discussed in Sections 4 and 5. In our study we have attempted to standardize the rating of 500/230 kV transformers used for the Mae Moh - Bangkok Transmission System. This will increase the overall system flexibility. We are recommending single phase substation transformers rated 80/106.67/133 MVA, 500/230/34.5 kV. We recommend that EGAT have one single phase spare transformer at each location.

As outlined in Section 3, the following number of autotransformers at Chum Saeng Substation is required:

YEAR	NUMBER OF AUTOTRANSFORMERS
1986	1
1987	3
1988	2
1989	2
1990	2
1991	3
1992	3
1993	2

Although the third autotransformer is not required through the years 1988, 1989 and 1990, we recommend retaining it at Chum Saeng due to the difficulties associated with removing and relocating this transformer in 1988 and reinstalling it at Chum Saeng in 1991.

Our studies indicated that additional transformer capacity will be required to avoid overload of the existing 100 MVA 230/115 kV autotransformer at Mae Moh.

TABLE 3

SUMMARY OF THE RECOMMENDED 500 KV SYSTEM DEVELOPMENT

YEAR	GENERATION AT MAJOR POWER PLANTS	500 kV T. LINES		500 kV SUBSTATIONS											
				MAE MOH				CHUM SAENG				MIN BURI			
		MM-CS	CS-MB	NO. OF 500 kV BKR'S	NO. OF 230 kV TERMINALS	AUTO-TRANS-FORMERS	SHUNT REACTORS	NO. OF 500 kV BKR'S	NO. OF 230 kV TERMINALS	AUTO-TRANS-FORMERS	SHUNT REACTORS	NO. OF 500 kV BKR'S	NO. OF 230 kV TERMINALS	AUTO-TRANS-FORMERS	SHUNT REACTORS
Sept. 1986	MM: 675 MW	-	-	-	-	-	-	-	-	-	-	-	-	-	-
Dec. 1986	MM: 825 MW	1	-	5	1	1X400 MVA	300 MVAR	3	1	1X400 MVA	550 MVAR	-	-	-	-
Aug. 1987	MM:1125 MW	2	-	7	1	1X400 MVA	400 MVAR	8	3	3X400 MVA	800 MVAR	-	-	-	-
1988	MM:1125 MW AP: 600 MW	2	1	7	1	1X400 MVA	420 MVAR	9	3	3X400 MVA	840 MVAR	1	1	1X400 MVA	200 MVAR
1989	MM:1125 MW AP:1200 MW	2	1	7	1	1X400 MVA	420 MVAR	9	3	3X400 MVA	840 MVAR	1	1	1X400 MVA	200 MVAR
1990	MM:1125 MW AP:1200 MW IY: 150 MW	2	1	7	1	1X400 MVA	420 MVAR	9	3	3X400 MVA	840 MVAR	1	1	1X400 MVA	200 MVAR
1991	MM:1425 MW AP:1200 MW IY: 150 MW	2	1	8	1	1X400 MVA	450 MVAR	9	3	3X400 MVA	650 MVAR	1	1	1X400 MVA	150 MVAR
1992	MM:1725 MW AP:1800 MW IY: 150 MW	2	1	9	1	1X400 MVA	480 MVAR	9	3	3X400 MVA	680 MVAR	1	1	1X400 MVA	165 MVAR
1993	MM:1725 MW AP:2400 MW IY: 600 MW	2	2	9	1	1X400 MVA	350 MVAR	9	2	2X400 MVA	550 MVAR	3	1	1X400 MVA	-

LEGEND: MM - Mae Moh
CS - Chum Saeng
MB - Min Buri
AP - Ao Phai
IY - Ing Yom

1.3 RECOMMENDED ADDITIONAL STUDIES

Our study indicates that the system under consideration requires significant amounts of shunt reactive support at each end of the 500 kV lines. This subject is discussed in Section 5.4. However, it should be understood that the ratings of the shunt reactors listed in this study are not final and should not be used for equipment purchase. The final recommendations on shunt reactors will be made after completion of TNA and reactive power optimization studies.

A separate study should be undertaken to resolve the problems related to the line overload in the greater Bangkok area.

Also, a study is recommended to develop an automatic emergency control system which would prevent the power system's collapse in cases when double contingencies occur on 500 kV lines, such as a fault on one 500 kV line while the second one is out of service.

The remedial measures, which could be considered are the following:

- Automatic Generator Dropping;
- Automatic Load Tripping;
- Optimized Area Separation

32

2.0 INTRODUCTION

2.1 GENERAL

This report was prepared to assist the Electricity Generating Authority of Thailand in planning the transmission system requirements for EGAT's proposed generating facilities at Mae Moh. This report was prepared under contract to the Bonneville Power Administration at the request of EGAT through the U.S. Ambassador, Morton I. Abramowitz.

The Electricity Generating Authority of Thailand has responsibility for generating and transmitting all electrical energy required in the Kingdom of Thailand. EGAT provides this energy as bulk supplies to those authorities responsible for distribution to the ultimate consumer. EGAT also has responsibility for directly supplying certain bulk energy requirements for major industrial users within Thailand.

In keeping with EGAT's associated responsibilities for planning and constructing required generation and transmission facilities, EGAT has prepared "EGAT's Power Development Plan" (1980-1993) dated December, 1980 (Reference 2). This report has superseded "EGAT's Power Development Plan" (dated January, 1980), upon which our first "Mae Moh-Bangkok EHV Transmission System Study was based. This new report reflects the changes in the generation schedule of Mae Moh units and formulates the generation schedule for the Ao Phai coal-fired plant which was included in this study instead of the previously planned construction of a nuclear plant. Also, we have been instructed by EGAT to include the Ing Yom hydro project in the transmission system study.

This plan describes EGAT's present energy and capacity requirements as well as available generation resources. EGAT's peak load in 1980 was 2,417.4 MW with 3,246 MW of installed generation capacity.

Projections through 1993 indicate a peak load of 8,546.8 MW in 1993 with an energy requirement of 51,192 GWh.

The EGAT System has historically maintained a load factor of between 65% and 70% and current projections indicate this factor will be maintained. These projections are indicated in Figure 2.2-1.

Base load for the EGAT System is generated with oil-fired thermal plants at North and South Bangkok and with the limited lignite capacity currently installed at Mae Moh. Intermediate and peaking generation requirements are provided with hydro, when available, and various local gas turbine and diesel facilities.

With the oil price increases of 1979 EGAT has provided additional concentration toward utilizing lignite resources near Mae Moh in the north of Thailand for their future base load generation requirements.

These studies are expected to indicate the viability of constructing approximately 1800 MW of lignite-fired generation at the Mae Moh Mine mouth location.

EGAT is continuing its investigation to determine the ultimate capacity of the lignite reserves near Mae Moh. To utilize the lignite resources currently proven in the Mae Moh area, EGAT has constructed or has planned Mae Moh Units 1-5 totaling 525 MW. These units consist of 3-75 MW units connected into the existing 115 kV transmission system at Mae Moh. Units 4 and 5 currently being designed are rated at 150 MW each and will connect to a 230 kV bus presently under construction at Mae Moh. The 230 and 115 kV buses will be interconnected via a 100 MVA autotransformer with 2-230 kV transmission lines between Mae Moh and the Phitsanulok 230 kV substation.

Additional generation at the Mae Moh location is now planned as Units 6 and 7 at 150 MW each and Units 8-10 at 300 MW each. Additional capacity at Mae Moh is contemplated, but the lignite reserves have not yet been explored sufficiently to indicate the amount and schedule for new generators. EGAT's initial conception of the transmission system for Mae Moh generation includes the following alternates:

- Expand the existing 230 kV transmission system by constructing 230 kV bus or buses at Mae Moh and connecting Mae Moh units in appropriate configuration. Construct 230 kV switching stations at Chum Saeng and Min Buri and interconnect Mae Moh, Chum Saeng and Min Buri with 230 kV lines. The anticipated Mae Moh-Chum Saeng-Min Buri transmission line corridors are 315 km and 235 km long.

34

- Construct a new EHV transmission system and connect Mae Moh 300 MW units to this system. Construct EHV substations at Chum Saeng and Min Buri and interconnect these substations with the existing 230 kV system via appropriate autotransformers. Interconnect these substations with appropriate EHV and 230 kV networks.

Our first study established 500 kV as the most economical and technically appropriate transmission voltage. Our present study will help EGAT to finalize their EHV system development plan, readjust it in accordance with new "EGAT Power Development Plan" (1980-1993), investigate the effect of inclusion of Ao Phai coal fired plant and Ing Yom hydro complex on the overall system, and establish the most economical and technically sound sequence for the Mae Moh-Chum Saeng-Min Buri EHV system development.

2.2 TRANSMISSION SYSTEM DEVELOPMENT

EGAT's existing transmission system currently consists of three transmission voltages, 230, 115 and 69 kV, utilized to transmit electrical energy between generating sources and distribution loads throughout the Kingdom.

By December 1980, the EGAT System divided into four regions utilized approximately 110 substations and more than 10,300 km of transmission lines to transmit power within the system.

Region 1, in which the city of Bangkok is located, lies within the central part of Thailand and contains by far the largest load within the system.

Generation near Bangkok, consisting of the North and South Bangkok Plants, is interconnected by a double circuit 230 kV loop around the city. Six 230/115 kV and 69 kV substations are located within this loop and supply power from the loop to the lower voltages within the city.

The Bang Pakong Generating Facility located outside the east of this loop is planned to interconnect with two of the substations within the loop and thus begin an outer loop on the city's eastern side.

35

FIGURE 2.1-1

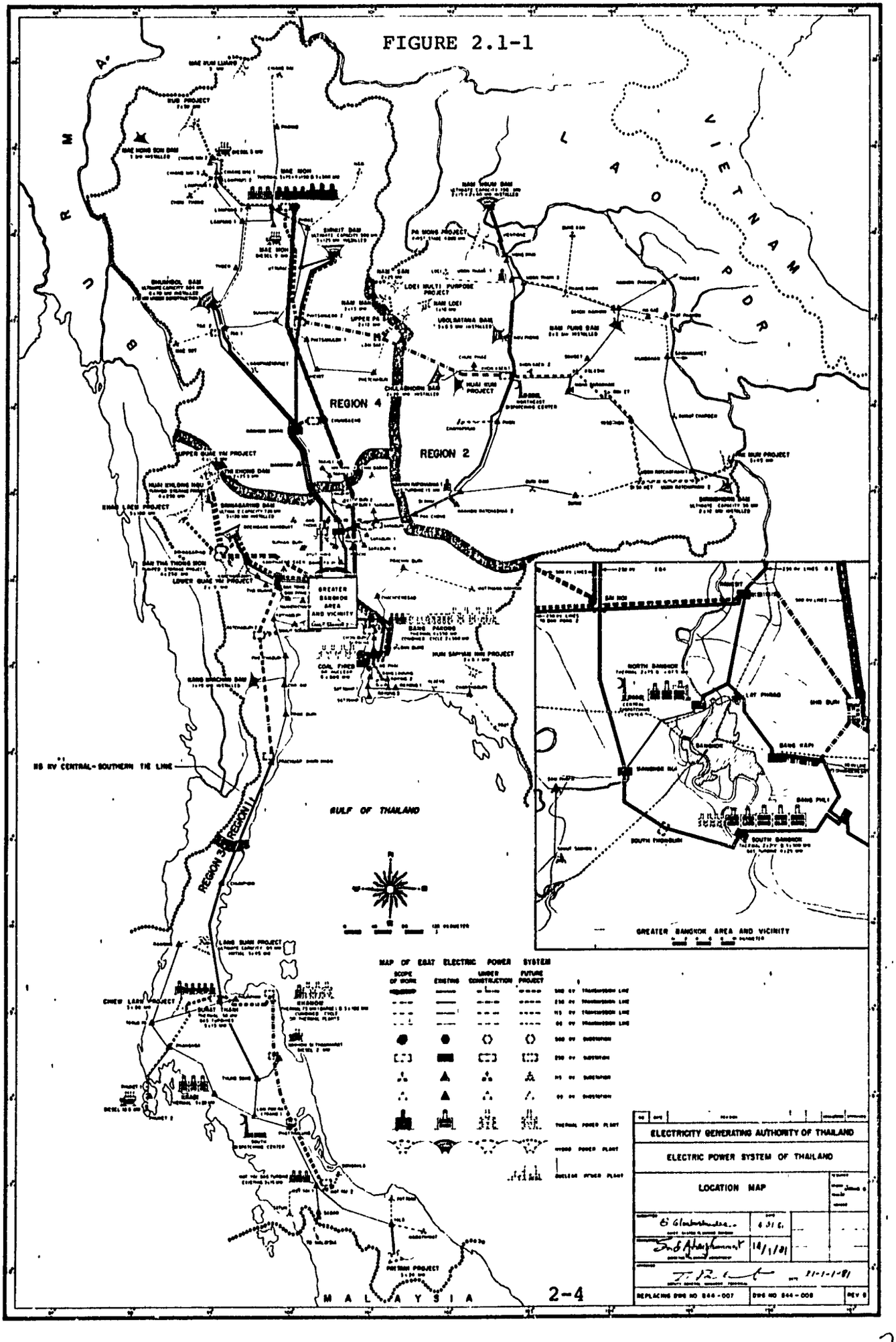
REGION 4
REGION 2
REGION 1
REGION 3
GULF OF THAILAND
GREATER BANGKOK AREA AND VICINITY
GREATER BANGKOK AREA AND VICINITY
MAP OF EGAT ELECTRIC POWER SYSTEM
SCOPE OF WORK
EXISTING
UNDER CONSTRUCTION
FUTURE PROJECT
THERMAL POWER PLANT
HYDRO POWER PLANT
DIESEL POWER PLANT
ELECTRICITY GENERATING AUTHORITY OF THAILAND
ELECTRIC POWER SYSTEM OF THAILAND
LOCATION MAP
REPLACING DWG NO 844-007
DWG NO 844-008
REV 0
M A L A Y S I A
2-4

SYSTEM PLANNING DIVISION PLANNING DEPARTMENT
INSTIS EGAT'S SYSTEM (1980-1993)
LOAD AUG.15,1980 (WITH PAK MUN,CHAO PHAYA,MAE NGAT,LAM TAKHONG,MID HYDRO)

POWER DEVELOPMENT PLAN

ELECTRICITY GENERATING AUTHORITY OF THAILAND
DEC. 22,1980

PEAK ANL CAPACITY - MW.

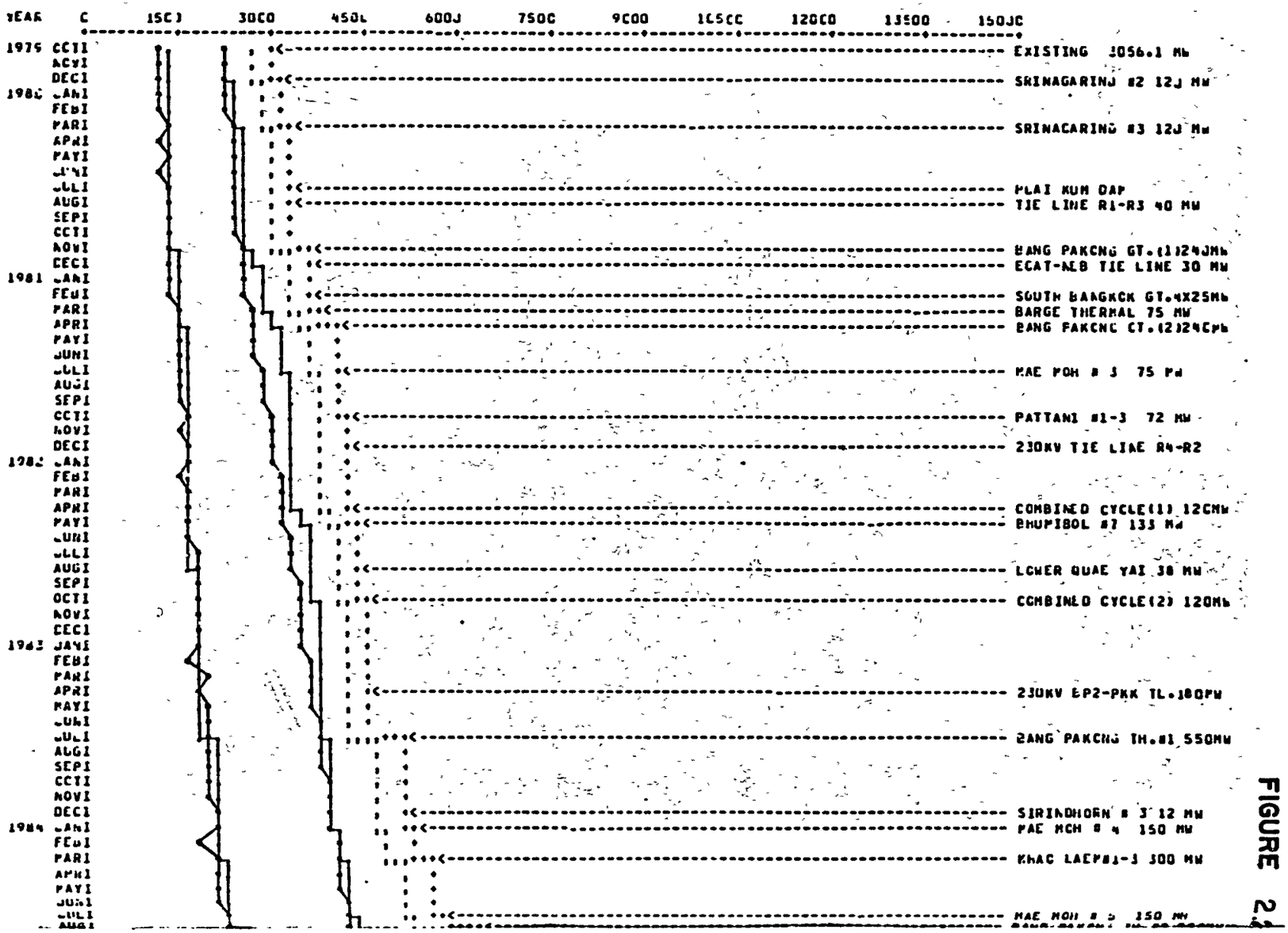

FIGURE 2

2.2-1 EGAT'S POWER DEVELOPMENT PLAN 1980-1993

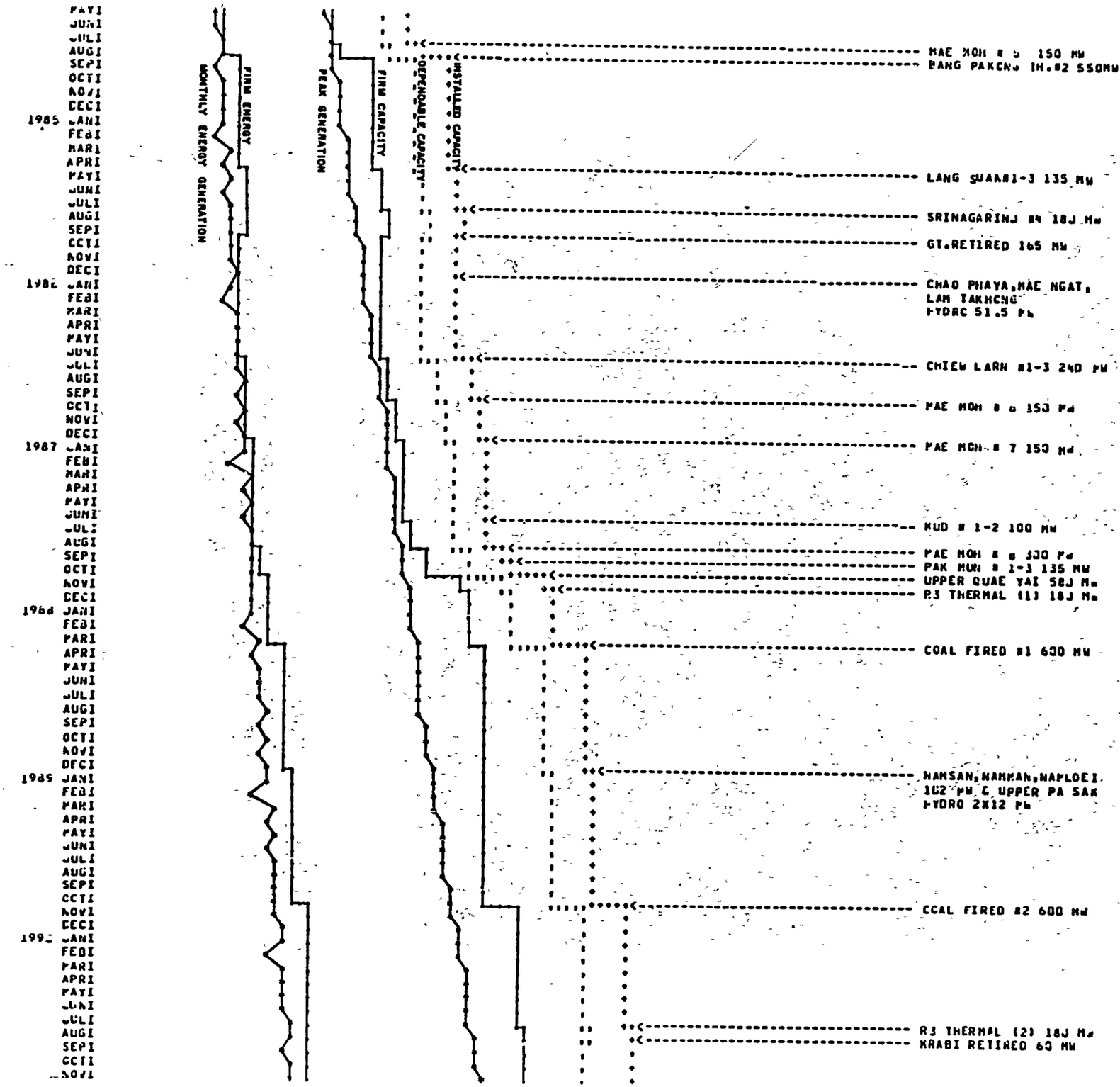

38

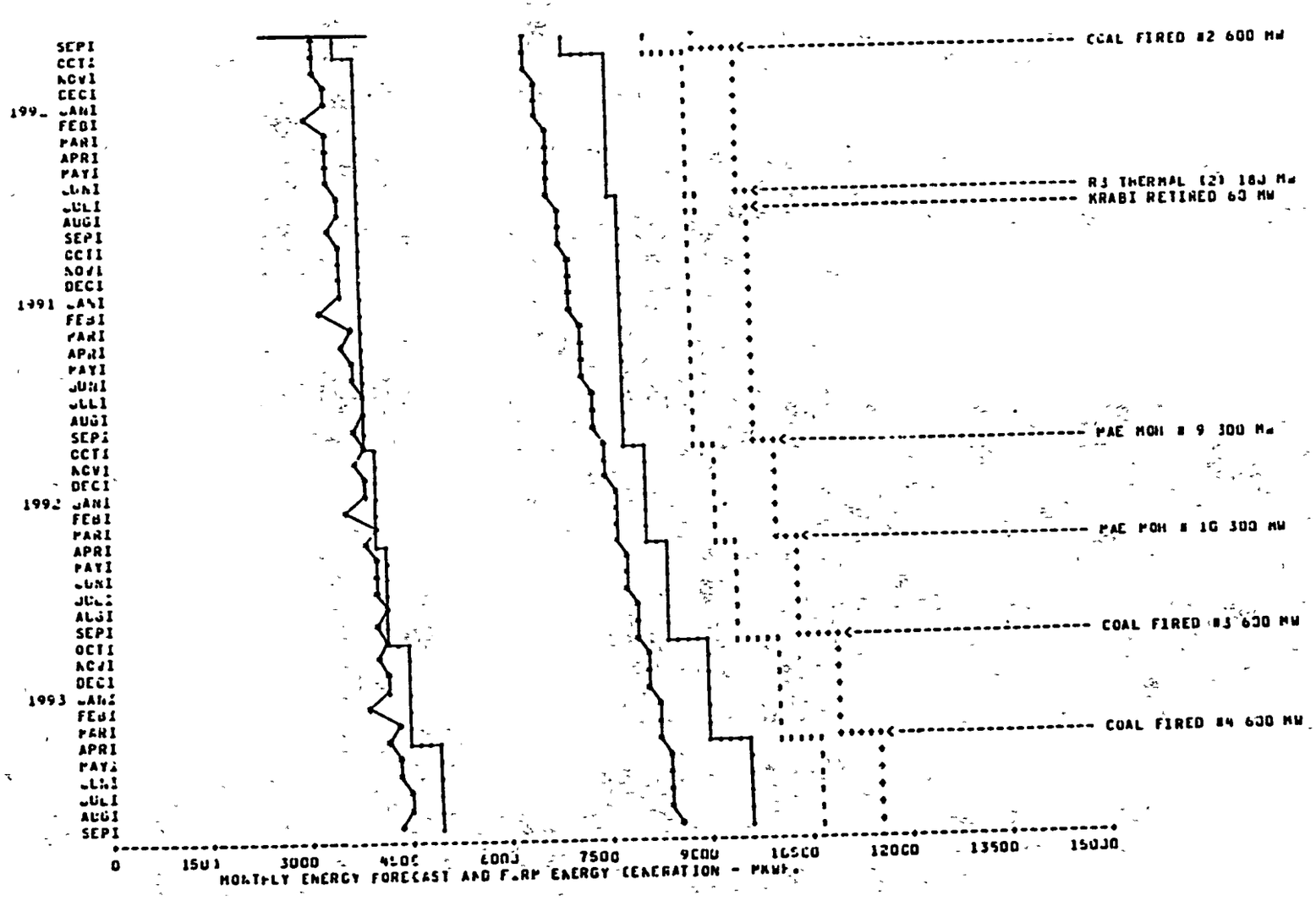

PHAC LAEP#1-3 300 MW

The balance of the existing generation currently serving Bangkok is hydro and is located northwest and north of the city. These hydro complexes are connected by predominantly radial 230 kV transmission systems.

Power from the western hydro, Srinagarind, is being transmitted to two substations on the north side of the loop and power from the northern hydro, Bhumibol and Sirikit is being consolidated at a substation north of the loop Nakhon Sawan. The 230 kV lines then interconnect this substation with three substations within the Bangkok loop.

The conceptual plan for future transmission envisions generating facilities southeast and north, and additional hydro or pumped storage west of the city.

Two EHV substations would be constructed northeast and northwest of the existing 230 kV loop. Two EHV transmission lines would interconnect these two outer substations. The proposed major generating facilities would be connected to these new substations in generally a radial configuration. Additional hydro capacity will be developed in the west and transmitted via EHV lines to the northwest substation, Sai Noi. The proposed Ao Phai Coal Plant will also be connected via EHV lines to the northeast substation, Min Buri.

The Mae Moh Plant for which this study was commissioned, would also be connected with Sai Noi via EHV lines from Min Buri.

Figure 2.2-2 depicts the conceptual plan of 500 kV transmission system interconnecting the large power plant project (Mae Moh and western hydro complex) which will provide a total generating capacity of 7,245 MW or more with the load centers located mainly in the Bangkok metropolitan area.

40

2.3 LOAD PROJECTION

As a result of EGAT's studies concerning the power demand within their service area, they have projected load growth for their total system (Reference 2). In August, 1980 a new load forecast for the Thailand electric system was released. This new load forecast differs from the original (December 1978) one, which was used for our previous study.

New projections cover the period 1981 through 1993 and are summarized in the following table.

FISCAL YEAR	PEAK GENERATION MW	PEAK GENERATION % INCREASE
1981	2,919.00	20.75
1982	3,379.60	15.78
1983	3,814.20	12.86
1984	4,271.20	11.98
1985	4,694.50	9.91
1986	5,147.60	9.65
1987	5,551.80	7.85
1988	5,978.50	7.69
1989	6,428.60	7.53
1990	6,902.90	7.38
1991	7,412.30	7.38
1992	7,959.40	7.38
1993	8,546.80	7.38

2.4 GENERATION SEQUENCE

EGAT's 13 year power development plan projects the sequence of their proposed generation resources from 1980 to 1983.

In 1986, prior to Mae Moh Unit 6, EGAT has planned to have 6732 MW net of generation resources to serve peak loads of approximately 5,100 MW.

Mae Moh Unit 6 is scheduled to be in service in September 1986, with the sequence of further generation planned as indicated in Table 2.4-1.

41

FIGURE 2.2-2 EGAT'S FUTURE GENERATION AND TRANSMISSION DEVELOPMENTS

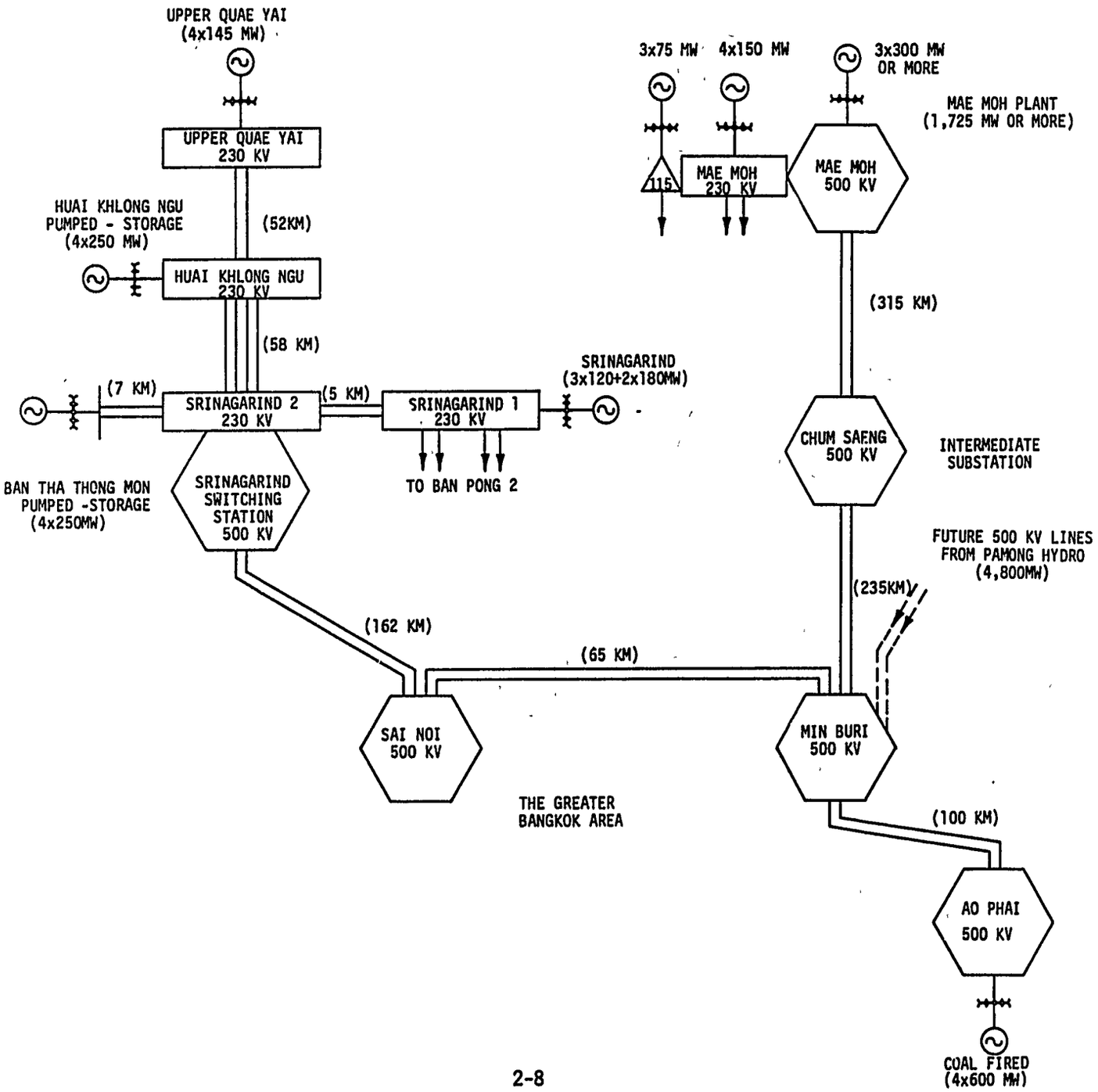

42

TABLE 2.4-1

POWER PLANT	FUEL TYPE	UNIT NUMBER	RATING	TOTAL	PROPOSED COMMISSIONING DATE
Mae Moh	Lignite	6	150	150	SEP 1986
Mae Moh	Lignite	7	150	150	DEC 1986
Kud	Hydro	1-2	50	100	JUN 1987
Mae Moh	Lignite	8	300	300	AUG 1987
Pak Mun	Hydro	1-3	45	135	SEP 1987
Upper Que Yai	Hydro	1-4	145	580	OCT 1987
Region 3-Combined Cycle	Oil/Gas	1-3	60	180	NOV 1987
Ao Phai	Coal	1	600	600	MAR 1988
Man San, Nam Man, Nam Loei	Hydro	-	102	102	DEC 1988
Upper Pak Sak	Hydro	1-2	12	24	DEC 1988
Ao Phai	Coal	2	600	600	OCT 1989
Region 3-Combined Cycle	Oil/Gas	1-3	60	180	JUL 1990
Krabi Retired	Lignite	1-3	20	-60	AUG 1990
Mae Moh	Lignite	9	300	300	OCT 1991
Mae Moh	Lignite	10	300	300	APR 1992
Ao Phai	Coal	3	600	600	OCT 1992
Ao Phai	Coal	4	600	600	APR 1993

TOTAL NET ADDITIONAL CAPACITY	=	4,841 MW
PLANNED GENERATION RESOURCES UNTIL 1986	=	6,732 MW
TOTAL	=	11,573 MW

Furthermore, in 1980, EGAT advised us to use the following generation schedule for Ing Yom Diversion Project, which consists of several pumping stations, canals and high head generating units:

YEAR	GENERATION CAPACITY
1990	1-70, 1-80 MW
1993	3-70, 3-80 MW

43

3.0 SYSTEM PLANNING STUDIES

3.1 INTRODUCTION

In our previous study titled, "Mae Moh - Bangkok EHV Transmission Study", we established 500 kV voltage level as the most economic voltage level (Reference 4). In this study, we will determine 500 kV transmission system development schedule and associated reactive and transformer requirements for bulk power transfer from Mae Moh to Min Buri (greater Bangkok) and incorporate proposed generation at Ing Yom and Ao Phai. EGAT plans to construct the following additional transmission facilities to transport bulk power from Ing Yom (consisting of generation at Pong Dam and Sua Ten Dam) and Ao Phai:

(1) 2-230 kV transmission lines from Pong Dam to Sua Ten Dam and from Sua Ten Dam to Mae Moh - 230 kV buses.

(2) 1-500 kV transmission line in 1988 and an additional 500 kV transmission line in 1989 from Ao Phai to Min Buri - 500 kV buses.

In addition, 1-500 kV transmission lines in 1988 and an additional 500 kV transmission line in 1989 will be constructed between Min Buri - 500 kV and Sai Noi - 500 kV buses.

The determination of 500 kV transmission system development schedule requires economic analysis of various transmission alternates between Mae Moh to Chum Saeng and Chum Saeng to Min Buri. This section discusses various transmission alternates and associated transformer and reactive requirements. In analyzing these alternates, EGAT suggested for us to (i) connect 2-230 kV transmission lines from Phitsanulok-2 to Chum Saeng 230 kV (instead of existing transmission link between Phitsanulok-2 to Nakhon Sawan) and (ii) uprate 2-230 kV lines from Chum Saeng to Nakhon Sawan using 2 x 1272 MCM ACSR conductor (instead of 1 x 1272 MCM ACSR conductor).

3.1.1 Selection of Viable Transmission Alternates

The selection of viable transmission alternates requires evaluation of voltage, loading and stability conditions of the EGAT System for the proposed generation and load schedule. Towards this end a planning criteria given in Appendix 1 for Mae Moh to Bangkok 500 kV Transmission System was developed.

3.1.2 Method of Analysis

Beginning with the year 1986, Mae Moh to Min Buri transmission alternates were developed for those years in which generation additions were made at either Mae Moh or Ing Yom or Ao Phai.

For each transmission alternate, load flow analysis for normal and abnormal conditions was performed for peak load conditions to determine compliance with the voltage and loading criteria given in Appendix 1. We should, however, point out that some of the existing system components (transformers, transmission lines, shunt reactors and shunt capacitors) will be inadequate to meet growing EGAT load demand. Hence, our analysis assumes that these components will be either uprated, upgraded or modified. Also, in our analysis we have neglected the affect of Region 3 generation resources and load demands, as approved during discussion with BPA and EGAT.

Transient stability analysis was performed only for the selected viable alternates for peak load condition. Also, load flow analysis for light load (60% of peak load) condition was performed to determine reactive requirements for the selected viable alternates.

The following transmission alternates were considered in our analysis:

EGAT TRANSMISSION ALTERNATIVES FOR
MAE MOH TO MIN BURI POWER TRANSMISSION

YEAR	TRANSMISSION ALTERNATIVES
1986	(1) No additional line from Mae Moh to Chum Saeng
	(2) Install 1-230 kV line from Mae Moh to Chum Saeng and CS-NS uprating.
1987	(3) Install 1-230 kV line from Mae Moh to Chum Saeng and CS-NS uprating.
	(4) Install 2-230 kV lines from Mae Moh to Chum Saeng and CS-NS uprating.
	(5) Install 2-500 kV lines from Mae Moh to Chum Saeng and CS-NS uprating.

45

YEAR	TRANSMISSION ALTERNATIVES
1988	(6) Install 1-230 kV line from Mae Moh to Chum Saeng and CS-NS uprating.
	(7) Install 2-230 kV lines from Mae Moh to Chum Saeng and CS-NS uprating.
	(8) Install 2-230 kV lines from Mae Moh to Chum Saeng and 1-230 kV line from Chum Saeng to Min Buri and CS-NS uprating.
	(9) Install 2-500 kV lines from Mae Moh to Chum Saeng and 1-500 kV line from Chum Saeng to Min Buri and CS-NS uprating.
1989	(10) Install 1-230 kV line from Mae Moh to Chum Saeng and CS-NS uprating.
	(11) Install 2-230 kV lines from Mae Moh to Chum Saeng and 1-230 kV line from Chum Saeng to Min Buri and CS-NS uprating.
	(12) Install 2-500 kV lines from Mae Moh to Chum Saeng and 1-500 kV line from Chum Saeng to Min Buri and CS-NS uprating.
1991	(13) Install 2-230 kV lines from Mae Moh to Chum Saeng and CS-NS uprating.
	(14) Same as (4) above.
	(15) Install 2-230 kV lines from Mae Moh to Chum Saeng and 1-230 kV line from Chum Saeng to Min Buri and CS-NS uprating.
	(16) Install 2-500 kV lines from Mae Moh to Chum Saeng and CS-NS uprating.
	(17) Same as (5) above.
	(18) Install 2-230 kV lines from Mae Moh to Chum Saeng to Min Buri and CS-NS uprating.
	(19) Install 2-500 kV lines from Mae Moh to Chum Saeng and 1-500 kV line from Chum Saeng to Min Buri and CS-NS uprating.

YEAR	TRANSMISSION ALTERNATIVES
1992	(20) Install 2-500 kV lines from Mae Moh to Chum Saeng and 1-230 kV line from Chum Saeng to Min Buri and CS-NS uprating.
	(21) Install 2-500 kV lines from Mae Moh to Chum Saeng and CS-NS uprating.
	(22) Install 2-230 kV lines from Mae Moh to Chum Saeng and 1-230 kV line from Chum Saeng to Min Buri and CS-NS uprating.
	(23) Install 2-230 kV lines from Mae Moh to Chum Saeng to Min Buri and CS-NS uprating.
	(24) Install 2-500 kV lines from Mae Moh to Chum Saeng and 2-230 kV lines from Chum Saeng to Min Buri and CS-NS uprating.
	(25) Install 2-500 kV lines from Mae Moh to Chum Saeng and 1-500 kV line from Chum Saeng to Min Buri and CS-NS uprating.
	(26) Install 2-500 kV lines from Mae Moh to Chum Saeng to Min Buri and CS-NS uprating.
1993	(27) Install 2-500 kV lines from Mae Moh to Chum Saeng and CS-NS uprating.
	(28) Install 2-230 kV lines from Mae Moh to Chum Saeng and 1-230 kV line from Chum Saeng to Min Buri and CS-NS uprating.
	(29) Install 2-230 kV lines from Mae Moh to Chum Saeng to Min Buri and CS-NS uprating.
	(30) Install 2-500 kV lines from Mae Moh to Chum Saeng and 2-230 kV lines from Chum Saeng to Min Buri and CS-NS uprating.
	(31) Install 2-500 kV lines from Mae Moh to Chum Saeng and 1-500 kV line from Chum Saeng to Min Buri and CS-NS uprating.
	(32) Install 2-500 kV lines from Mae Moh to Chum Saeng to Min Buri and CS-NS uprating.

LEGEND:

MM - MAE MOH		NS = NAKHON SAWAN	
CS - CHUM SAENG		PL = PHITSANULOK 2	
MB - MIN BURI			

3.2 DISCUSSION OF RESULTS

3.2.1 Load Flow Analysis

The load flow studies were undertaken for each of the above transmission alternates using appropriate peak loads. Some of the above transmission alternates, include EGAT's suggestions (Reference 5). Table 3-1 gives a summary of the results for load flow analysis of the EGAT suggested alternates.

Based on our analysis of various transmission alternates, following viable alternates were selected for stability analysis:

YEAR	ADDITION	TRANSMISSION ALTERNATES WITH 4x795 MCM ACSR			
		ALTERNATE 1		ALTERNATE 2	
		MM-CS	CS-MB	MM-CS	CS-MB
1986	MM-6				
1986	MM-7	1-230 kV	-	1-500 kV	-
1987	MM-8			1-500 kV	-
1987	MM-8	2-230 kV	-	2-500 kV	-
1988	AP-1	2-230 kV	1-230 kV	2-500 kV	1-500 kV
1989	AP-2	2-230 kV	1-230 kV	2-500 kV	1-500 kV
1991	MM-9	2-230 kV	2-230 kV		
1992	MM-10,AP-3			2-500 kV	1-500 kV
1993	AP-4				
	Ing Yom 450 MW			2-500 kV	2-500 kV

Consideration was given to utilizing the existing 230 kV lines from Mae Moh to Phitsanulok 2 to accommodate Mae Moh Units 6 and 7. Our studies have indicated that the system under consideration would be stable for a three phase fault at Mae Moh. However, any outage of one of the 230 kV lines from Mae Moh to Phitsanulok 2 would create an overload of the second line by 21%. Therefore, we are recommending that the in-service date of the first 500 kV line from Mae Moh to Chum Saeng coincide with the installation of Mae Moh Unit 7. However, if EGAT would adopt a line loading criteria less conservative than the one described in Appendix 1, it would be possible to postpone the in-service date for this line until August 1987 (the in-service date for Mae Moh Unit 8).

Our studies have indicated that the first line between Chum Saeng and Min Buri should be put into service in 1988. Since there is no additional generation scheduled for installation at Mae Moh in this year, we would like to discuss here the factors which have been used to justify the necessity of having this line in-service in 1988.

The recommendation to construct the first line between Chum Saeng and Min Buri in 1988 is based upon the fact that postponing construction of this line will create an overload on one of the 230 kV lines from Chum Saeng to Nakhon Sawan when the second line is out of service. This was not the case for the year 1987 despite the fact that the total generation at Mae Moh for both years remains unchanged. The difference between these cases is explained by the different distribution of EGAT generation between power plants in Regions 1 and 4 for the years 1987 and 1988. Taking into account the rapid load growth in the greater Bangkok area and the possibility of a delay in the construction of the first unit at Ao Phai in 1988, we have attempted to simulate the situation where more power would be transmitted to the Bangkok area from the northern hydro plants (Sirikit, Bhumibol, Kud) and less power would be generated at the southern and western plants (South Bangkok, Srinagarind).

In our model of the 1988 system, therefore, both lines from Chum Saeng to Nakhon Sawan carried more load than they did in our 1987 model.

Using the conservative approach outlined above, we recommend putting the first line from Chum Saeng to Min Buri in service in 1988. By approaching the system planning less conservatively, however, EGAT might be able to postpone the construction of the first line between Chum Saeng and Min Buri until 1990 or 1991.

49

Briefly, in Alternate 1 Mae Moh to Chum Saeng to Min Buri Transmission Lines will be constructed as 500 kV but operated as 230 kV, while in Alternate 2 Mae Moh to Chum Saeng to Min Buri Transmission Lines will be constructed as 500 kV and also operated as 500 kV.

Figures 3.1 through 3.11, depict voltage, transformer and transmission line loadings and reactive requirements of both 230 kV alternate (Alternate 1) and 500 kV alternate (Alternate 2). It is obvious that both alternates meet voltage and line loading criteria.

3.2.2 Reactive Requirements at Mae Moh, Chum Saeng and Min Buri Substations

Load flow studies of the above viable 230 kV and 500 kV alternates have indicated the following shunt reactor requirements at Mae Moh, Chum Saeng and Min Buri 500 kV buses based on light load conditions:

ALTERNATE 1
SHUNT REACTOR REQUIREMENTS (MVAR)

YEAR	MAE MOH	CHUM SAENG
1986	200	300
1987	300	350
1988	300	450
1989	300	450

ALTERNATE 2
SHUNT REACTOR REQUIREMENTS
SHUNT REACTOR SIZE (MVAR)

YEAR	MAE MOH	CHUM SAENG	MIN BURI
1986	300	550	-
1987	400	800	-
1988	420	840	200
1989	420	840	200
1991	450	650	150
1992	480	680	165
1993	350	550	-

It is assumed that Ao Phai to Min Buri 500 kV transmission lines will provide the balance of Min Buri reactive requirements.

3.2.3 Transformer Requirements at Mae Moh, Chum Saeng and Min Buri Substations

Based on the load flow studies, following 500/230 kV transformer requirements for 500 kV Alternate 2 are estimated for Mae Moh, Chum Saeng and Min Buri buses. It is assumed that during transformer outage, remaining transformers will carry required loads.

TRANSFORMER SIZE (MVA)

YEAR	MAE MOH	CHUM SAENG	MIN BURI
1986			
1987	1-400	3-400	-
1988	1-400	2-400	2-400
1989	1-400	2-400	3-400
1991	1-400	3-400	3-400
1992	1-400	3-400	3-400
1993	1-400	2-400	4-400

3.2.4 Additional Reactive Requirements for EGAT System

Reactive support, consisting of both shunt reactor and shunt capacitor installations, is needed for desired power transfer and voltage levels. Based on our studies, we recommend that EGAT undertake additional studies to determine reactive requirements at other substations. For example, our 1993 load flow study indicates a need of (i) additional 20 MVAR shunt reactor at Khon Kaen and (ii) additional shunt capacitor installations at number of locations in EGAT system (excluding Region 3) as given in Table 3.2. Similarly, our 1988 load flow study for 500 kV alternate indicates a need for (i) additional 200 MVAR shunt reactor requirement and (ii) additional shunt capacitor installations at number of locations given in Table 3.3.

3.2.5 Transmission Line and Transformer Overloads

As discussed previously because of the increased load demand, the existing EGAT System will have to be reinforced by either uprating, upgrading or modifying various system components and configurations. Tables 3.4 through 3.7 give transmission line and transformer overload

51

summary of the preferred 500 kV alternate. We recommend that EGAT undertake additional studies to minimize the overall cost of the existing EGAT System reinforcement to economically carry future load growths.

3.3 TRANSIENT STABILITY STUDIES

Transient stability studies were undertaken to establish stability of the EGAT System in each of the years when Mae Moh, Ing Yom and Ao Phai generation will be installed. As discussed in Appendix 1 "System Planning Criteria", a three phase fault at no automatic reclosing at one of the following buses was considered:

(1) A three phase fault at Mae Moh-500 kV on one Mae Moh to Chum Saeng Line,

(2) A three phase fault at Chum Saeng-500 kV on one Chum Saeng to Min Buri Line,

(3) A three phase fault at Chum Saeng-230 kV on one Chum Saeng to Nakhon Sawan 230 kV Line,

(4) A three phase fault at Mae Moh-230 kV on one Mae Moh to Phitsaunok-2 Line.

The 230 kV and 500 kV alternates which had been determined viable from a load flow standpoint were tested for transient stability during fault conditions. Tables 3.8 through 3.12 summarize the results of these tests. Figures 3.12 through 3.24 show the generator swing curves during and immediately after a three phase fault.

We have recommended the addition of the second line from Mae Moh to Chum Saeng in 1987 for stability reasons. Our transient stability studies indicate that the system is unstable for a fault at Mae Moh without this connection (Figure 3-23). Similarly, the conversion from 230 kV to 500 kV in 1991 is considered necessary because in this year, the system becomes unstable when operated at 230 kV (Figures 3-24 and 3-25).

The EGAT System remains stable for a three phase fault at Mae Moh with the system development plan we have chosen when additional generation at Mae Moh, Ing Yom and Ao Phai is incorporated as scheduled.

3.4 CONCLUSIONS AND RECOMMENDATIONS

(1) Both 230 kV and 500 kV systems which we have chosen are technically viable. Hence, the 230 kV alternate with recommended reactive requirements and the 500 kV alternate with recommended reactive requirements will be further evaluated to determine the most economical alternate for the future EGAT system.

(2) Additional reactive support on other parts of the EGAT System is required for anticipated power transfer and voltage levels. It is recommended that EGAT undertake a detailed study to determine future reactive requirements and optimum locations in other parts of EGAT System.

(3) Existing system components, such as transformers, transmission lines, etc., need reinforcement to carry future EGAT load growth. It is recommended that EGAT undertake additional studies to minimize the overall cost of the existing EGAT System reinforcement.

(4) The EGAT System will be stable when Mae Moh, Ing Yom and Ao Phai generation is added to the existing EGAT System as planned, through the planning horizon of this study.

TABLE : 3-1

EGAT SUGGESTED ALTERNATIVES FOR MAE MOH - BANGKOK TRANSMISSION SYSTEM WITH 230 KV LINE FROM PHITSANULOK 2 TO CHUM SAENG AND CHUM SAENG TO NAKHON SAWAN 230 KV LINE UPRATING TO 2 X 1272 MCM ACSR

CASE	ADDITION AT MM	TRANSMISSION ALTERNATES WITH 4x795 MCM ACSR		RESULTS OF LOAD FLOW SIMULATION		
	POWER PLANT UNITS #	MM-CS	CS-MB	TRANSMISSION SECTION	% OVERLOAD	JUDGEMENT
1986-MAE MOH 230 kV TO PHITSANULOK OUTAGE	6	-	-	-	-	VIABLE ALTERNATE
1986-MAE MOH 230 kV TO CHUM SAENG AND MAE MOH 230 kV TO PHITSANULOK OUTAGES	7	1-230 kV	-	-	-	VIABLE ALTERNATE

TABLE : 3-1

EGAT SUGGESTED ALTERNATIVES FOR MAE MOH - BANGKOK TRANSMISSION SYSTEM WITH 230 KV LINE FROM PHITSANULOK 2 TO CHUM SAENG AND CHUM SAENG TO NAKHON SAWAN 230 KV LINE UPRATING TO 2 X 1272 MCM ACSR

CASE	ADDITION AT MM	TRANSMISSION ALTERNATES WITH 4x795 MCM ACSR		RESULTS OF LOAD FLOW SIMULATION		
	POWER PLANT UNIT #	MM-CS	CS-MB	TRANSMISSION LINE SECTION	% OVERLOAD	JUDGEMENT
1987-MAE MOH 230 kV TO CHUM SAENG 230 kV LINE OUTAGE	8	1-230 kV	-	MAE MOH 230 kV TO PHITSANULOK-2	106	NOT VIABLE ALTERNATE
1987-CHUM SAENG TO NAKHON SAWAN 230 kV LINE OUTAGE	8	1-230 kV	-			
1988-MAE MOH 230 kV TO CHUM SAENG 230 kV LINE OUTAGE	8	1-230 kV	-	MAE MOH 230 kV TO PHITSANULOK-2	108	NOT VIABLE ALTERNATE
1988-CHUM SAENG TO NAKHON SAWAN 230 kV LINE OUTAGE	8	1-230 kV	-	CHUM SAENG TO NAKHON SAWAN	117	

TABLE : 3-1

EGAT SUGGESTED ALTERNATIVES FOR MAE MOH - BANGKOK TRANSMISSION SYSTEM WITH 230 KV LINE FROM PHITSANULOK 2 TO CHUM SAENG AND CHUM SAENG TO NAKHON SAWAN 230 KV LINE UPRATING TO 2 X 1272 MCM ACSR

CASE	ADDITION AT MM	TRANSMISSION ALTERNATES WITH 4x795 MCM ACSR		RESULTS OF LOAD FLOW SIMULATION		
	POWER PLANT UNITS #	MM-CS	CS-MB	TRANSMISSION SECTION	% OVERLOAD	JUDGEMENT
1989-MAE MOH TO CHUM SAENG LINE OUTAGE	8	1-230 kV	-	MAE MOH TO PHITSANULOK-2	104.5	NOT VIABLE ALTERNATE
1989-CHUM SAENG TO NAKHON SAWAN 230 kV LINE OUTAGE	8	1-230 kV	-	CHUM SAENG TO NAKHOW SAWAN	106	
1991-CHUM SAENG TO NAKHON SAWAN LINE OUTAGE	8,9	2-230 kV	-	CHUM SAENG TO NAKHOW SAWAN	145	NOT VIABLE ALTERNATE
1991-MAE MOH TO PHITSANULOK 230 kV LINE OUTAGE	8,9	2-230 kV	-	MAE MOH TO PHITSANULOK	105	NOT VIABLE ALTERNATE

TABLE : 3-1

EGAT SUGGESTED ALTERNATIVES FOR MAE MOH - BANGKOK TRANSMISSION SYSTEM WITH 230 KV LINE FROM PHITSANULOK 2 TO CHUM SAENG AND CHUM SAENG TO NAKHON SAWAN 230 KV LINE UPRATING TO 2 X 1272 MCM ACSR

CASE	ADDITION AT MM	TRANSMISSION ALTERNATES WITH 4x795 MCM ACSR		RESULTS OF LOAD FLOW SIMULATION		
	POWER PLANT UNITS #	MM-CS	CS-MB	TRANSMISSION SECTION	% OVERLOAD	JUDGEMENT
1991-CHUM SAENG TO NAKHON SAWAN 230 kV LINE OUTAGE	8,9	2-500 kV	-	CHUM SAENG TO NAKHON SAWAN	133	NOT VIABLE ALTERNATE
1992-CHUM SAENG TO NAKHON SAWAN 230 kV LINE OUTAGE	8,9,10	2-500 kV	1-230 kV	CHUM SAENG TO NAKHON SAWAN	104	NOT VIABLE ALTERNATE
1992-CHUM SAENG TO NAKHON SAWAN 230 kV LINE OUTAGE	8,9,10	2-230 kV	1-230 kV	CHUM SAENG TO NAKHON SAWAN	112	NOT VIABLE ALTERNATE

TABLE : 3-1

EGAT SUGGESTED ALTERNATIVES FOR MAE MOH - BANGKOK TRANSMISSION SYSTEM WITH 230 KV LINE FROM PHITSANULOK 2 TO CHUM SAENG AND CHUM SAENG TO NAKHON SAWAN 230 KV LINE UPRATING TO 2 X 1272 MCM ACSR

CASE	ADDITION AT MM	TRANSMISSION ALTERNATES WITH 4x795 MCM ACSR		RESULTS OF LOAD FLOW SIMULATION		
	POWER PLANT UNITS #	MM-CS	CS-MB	TRANSMISSION SECTION	% OVERLOAD	JUDGEMENT
1992 CHUM SAENG TO NAKHON SAWAN LINE OUTAGE	8,9,10	2-230 kV	2-230 kV	CHUM SAENG NAKHON SAWAN	115	NOT VIABLE ALTERNATE
1992-500/230 kV TRANSFORMER OUTAGE	8,9,10	2-500 kV	2-230 kV	MAE MOH TO PHITSANULOK-2 LOW VOLTAGE ON	148 MANY BUSSES	NOT VIABLE ALTERNATE
1992-BASE CASE AND MM-CS, CS-MB, CS-NS AND MM-PL OUTAGE	8,9,10	2-500 kV	1-500 kV	-	-	VIABLE ALTERNATE

58

TABLE : 3-1

EGAT SUGGESTED ALTERNATIVES FOR MAE MOH - BANGKOK TRANSMISSION SYSTEM WITH 230 KV LINE FROM PHITSANULOK 2 TO CHUM SAENG AND CHUM SAENG TO NAKHON SAWAN 230 KV LINE UPRATING TO 2 X 1272 MCM ACSR

CASE	ADDITION AT MM	TRANSMISSION ALTERNATES WITH 4x795 MCM ACSR		RESULTS OF LOAD FLOW SIMULATION		
	POWER PLANT UNITS #	MM-CS	CS-MB	TRANSMISSION SECTION	% OVERLOAD	JUDGEMENT
1992- BASE CASE, AND MM-CS, CS-MB AND CS 500/230 kV TRANSFORMER OUTAGES	8,9,10	2-500 kV	2-500 kV	-	-	VIABLE ALTERNATE
1993- CHUM SAENG TO NAKHON SAWAN LINE OUTAGE	8,9,10	2-230 kV	1-230 kV	CHUM SAENG TO NAKHON SAWAN	132	NOT VIABLE ALTERNATE
1993-CHUM SAENG TO NAKHON SAWAN LINE OUTAGE	8,9,10	2-230 kV	2-230 kV	CHUM SAENG TO NAKHON SAWAN	122	NOT VIABLE ALTERNATE

TABLE : 3-1

EGAT SUGGESTED ALTERNATIVES FOR MAE MOH - BANGKOK TRANSMISSION SYSTEM WITH 230 KV LINE FROM PHITSANULOK 2 TO CHUM SAENG AND CHUM SAENG TO NAKHON SAWAN 230 KV LINE UPRATING TO 2 X 1272 MCM ACSR

CASE	ADDITION AT MM	TRANSMISSION ALTERNATES WITH 4x795 MCM ACSR		RESULTS OF LOAD FLOW SIMULATION		
	POWER PLANT UNITS #	MM-CS	CS-MB	TRANSMISSION SECTION	% OVERLOAD	JUDGEMENT
1993- 500/230 kV TRANSFORMER OUTAGE	8,9,10	2-500 kV	2-230 kV	VOLTAGE	COLLAPSE	NOT VIABLE ALTERNATE
1993- MAE MOH TO PHITSANULOK LINE OUTAGE	8,9,10	2-500 kV	1-500 kV	MAE MOH TO PHITSANULOK-2	109	NOT VIABLE ALTERNATE
CHUM SAENG TO NAKHON SAWAN LINE OUTAGE	8,9,10	2-500 kV	1-500 kV	CHUM SAENG TO NAKHON SAWAN	105	
1993 MAE MOH TO PHITSANULOK LINE OUTAGE	8,9,10	2-500 kW	2-500 kV	MAE MOH TO PHITSANULOK LIVE OUTAGE	106	VIABLE IF MM-PL LINE IS UPRATED
1993-MM-CS CS-MB, CS 500/230 kV OUTAGES	8,9,10	2-500 kV	2-500 kV	-	-	

60

TABLE 3-2

1993 PROPOSED 500 kV EGAT SYSTEM
LOCATIONS AND RATINGS OF SHUNT CAPACITORS
ASSUMED FOR THE STUDY

SHUNT CAPACITOR LOCATION	CAPACITOR SIZE (MVAR)	SHUNT CAPACITOR LOCATION	CAPACITOR SIZE (MVAR)
Lamphum-115	35	Udon Thani-115	47
Kaniphaengphet-115	40	Khon Kaen 2-115	20
Phichit-115	45	Nong Khai-115	45
Nan-115	33	Maha Sarakham-115	91
Phayao-115	82	Chum Phae-115	15
Chiang Pai-115	67	Udon Thani 2-115	88
Nakhon Sawan	90	Roi Et-115	25
Mansrom-69	89	Yasoltron-115	39
Takhli 2-69	26	Kalasin-115	24
Takhli 1-69	20	Phang Khon-115	16
Lop Buri-69	19	Sakhon Nakhon-115	20
Phra Phutthabat-115	12	Muk dahan-115	19
Chai Badan-115	8	Ubon Ratchathani-115	29
Lop Buri 2-115	40	Si Sa ket-115	31
Singburi-69	34	Nakhon Phanon-66	26
Singburi-115	28	That Phanom-66	20
Saraburi-69	71	Prachin Buri-115	49
Ayulthaya 2-115	48	Wathana Nakhon-115	28
Saraburi 2-115	448	Satlahip 2-115	70
Buri Ram-115	35	Razong-115	103
Surin-115	51	Chanthaburi-115	34
Phon-115	50	Samut Sakhon-115	47
Chaiyaphum-115	53	Cha-Am-115	39
Khon Kaen-115	33	Pran Buri-115	15
		Chumphon-115	10

61

TABLE 3-3

1988 PROPOSED 500 kV EGAT SYSTEM
LOCATIONS AND RATINGS OF SHUNT CAPACITORS
ASSUMED IN THE STUDY

SHUNT CAPACITOR LOCATION	CAPACITOR SIZE (MVAR)	SHUNT CAPACITOR LOCATION	CAPACITOR SIZE (MVAR)
Lamphum-115	25	Khon Kaen 2-115	20
Kamphaengphet-115	25	Nong Khai-115	23
Phichit-115	35	Maha Sarakham-115	53
Nan-115	20	Udon Thani 2-115	36
Phayao-115	40	Roi Et-115	14
Nakhon Sawan-69	79	Yasothon-115	23
Manorom-69	51	Kalasin-115	7
Takhli 1-69	17	Mukdahan-115	11
Takhli 2-69	12	Ubon Ratchathani-115	5
Lop Buri-69	13	Ubon Ratchathani 2-115	16
Chai Badan-115	5	Nakhon Phanom-66	17
Lop Buri 2-115	32	That Phanom-66	15
Sing Buri-69	16	Prachin Buri-115	50
Sing Buri-115	27	Watthana Nakhon-115	11
Saraburi-69	51	Sattahip 2-115	57
Ayutthaya-115	49	Rayong-115	165
Saraburi-115	248	Chanthaburi-115	17
Phon-115	40	Samut Sakhon-115	49
Chaiyaphum-115	23	Cha-Am-115	39
Khon Kaen-115	70	Pran Buri-115	15
Udon Thani-115	24	Prachnap Kmiri Khan-115	20
		Chumphon-115	10

62

TABLE 3-4

TRANSMISSION LINE AND TRANSFORMER OVERLOAD SUMMARY 1988
2-500 kV LINES FROM MAE MOH TO CHUM SAENG
1-500 kV LINE FROM CHUM SAENG TO MIN BURI

FROM	TO	% CAPACITY
43-MM-230	38-MM-500	102.3
60-RY2-230	194-RY-115	119.4
60-RY2-230	194-RY-115	119.4
61-SB-230	62-STB-230	103.0
61-SB-230	80-SB-115	115.8
82-NB-69	64-NB-230	100.4
110-PY-115	108-MM-115	115.2
113-CM2-115	220-KUD-115	114.5
116-NS-69	49-NS-230	118.5
117-MR-69	116-NS-69	131.6
127-AT2-115	132-AY2-115	100.8
128-TL-69	129-SR-69	106.3
156-MK-115	176-MK-66	126.5
168-SO-115	179-SO-66	108.8
183-BPK-115	184-CC-115	124.4
189-AP-115	191-BL-115	106.2
200-BN-115	201-SA-115	104.3
200-BN-115	201-SA-115	104.3

63

TABLE 3-5

TRANSMISSION LINE AND TRANSFORMER OVERLOAD SUMMARY 1991
2-500 kV LINES FROM MAE MOH TO CHUM SAENG
1-500 kV LINE FROM CHUM SAENG TO MIN BURI

FROM	TO	% CAPACITY
46-KK-230	151-KK-115	113.3
46-KK-230	151-KK-115	113.3
49-NS-230	116-NS-69	125.9
50-AT-230	120-AT-69	113.7
50-AT-230	120-AT-69	113.7
53-RS-230	73-RS-69	105.7
60-RY2-230	194-RY-115	140.1
60-RY2-230	194-RY-115	140.1
61-SB-230	62-STB-230	110.4
61-SB-230	79-SN-69	120.3
61-SB-230	79-SB-69	120.3
61-SB-230	80-SB-115	144.0
63-BN-230	200-BN-115	109.5
63-BN-230	200-BN-115	109.5
110-PY-115	108-MM-115	147.9
116-NS-69	117-MR-69	178.5
120-AT-69	125-SI-69	135.8
127-AT2-115	126-SI-115	105.7
127-AT2-115	132-AY2-115	124.0
128-TL-69	120-AT-69	100.9
129-SR-69	128-TL-69	129.8
135-AT-115	137-TL-115	100.7
135-AT-115	137-TL-115	100.7
136-ATA-115	137-TL-115	115.3
151-KK-115	156-MK-115	113.8
156-MK-115	176-MK-66	184.7
168-SO-115	179-SO-66	135.4
183-BPK-115	58-BPK-230	100.2
184-CC-115	183-BPK-115	148.9
189-AP-115	188-SC-115	125.0
189-AP-115	191-BL-115	125.4
200-BN-115	201-SA-115	124.3
200-BN-115	201-SA-115	124.3

TABLE 3-6

TRANSMISSION LINE AND TRANSFORMER OVERLOAD SUMMARY 1992
2-500 kV LINES FROM MAE MOH TO CHUM SAENG
AND CHUM SAENG TO MIN BURI

FROM	TO	% CAPACITY
40-CS-500	48-CS-230	109.9
44-PL-230	96-PL2-115	128.5
46-KK-230	151-KK-115	117.2
49-NS-230	116-NS-69	134.1
50-AT-230	120-AT-69	123.4
58-BPK-230	57-BPL-230	103.7
58-BPK-230	183-BPK-115	104.5
60-RY2-230	194-RY-115	148.3
61-SB-230	79-SB-69	128.6
61-SB-230	80-SB-115	153.6
63-BN-230	200-BN-115	124.0
63-BN-230	200-BN-115	124.0
65-BP2-230	208-BP2-115	106.0
73-RS-69	53-RS-230	108.9
110-PY-115	108-MM-115	145.5
113-CM2-115	220-KUD-115	116.0
117-MR-69	116-NS-69	192.5
120-AT-69	125-SI-69	152.0
120-AT-69	128-TL-69	107.5
126-SI-115	127-AT2-115	111.0
127-AT2-115	132-AY2-115	132.7
128-TL-69	129-SR-69	137.5
135-AT-115	137-TL-115	107.2
137-TL-115	136-ATA-115	118.3
156-MK-115	151-KK-115	116.7
168-SO-115	179-SO-66	141.1
176-MK-66	156-MK-115	197.9
183-BPK-115	184-CC-115	162.2
188-SC-115	189-AP-115	137.5
189-AP-115	191-BL-115	135.0
200-BN-115	201-SA-115	140.2
203-SN-115	201-SA-115	105.8

65

TABLE 3-7

TRANSMISSION LINE AND TRANSFORMER OVERLOAD SUMMARY 1993
2-500 kV LINES FROM MAE MOH TO CHUM SAENG
AND CHUM SAENG TO MIN BURI

FROM	TO	% CAPACITY
40-CS-500	48-CS-230	141.5
44-PL-230	96-PL2-115	148.0
46-KK-230	151-KK-115	135.0
48-CS-230	49-NS-230	112.0
49-NS-230	116-NS-69	143.0
50-AT-230	120-AT-69	134.4
51-AT2-230	140-SR2-230	101.0
52-SN0-230	225-SN0-500	112.3
53-RS-230	73-RS-69	121.0
54-LPO-230	55-BK-230	106.0
55-BK-230	76-BK-69	107.4
57-BPL-230	58-BPK-230	110.2
60-RY2-230	194-RY-115	160.0
61-SB-230	79-SB-69	138.5
61-SB-230	80-SB-115	165.0
63-BN-230	200-BN-115	135.3
65-BP2-230	208-BP2-115	114.0
108-MM-115	112-LP-115	121.0
110-PY-115	108-MM-115	156.0
117-MR-69	116-NS-69	210.1
120-AT-69	128-TL-69	117.2
126-SI-115	127-AT2-115	118.0
127-AT2-115	132-AY2-115	143.2
128-TL-69	129-SR-69	147.0
135-AT-115	137-TL-115	118.0
137-TL-115	136-ATA-115	130.0
151-KK-115	159-UD2-115	100.5
156-MK-115	151-KK-115	139.5
168-SO-115	179-SO-66	151.2
176-MK-66	156-MK-115	235.0
179-SO-66	168-SO-115	160.4
183-BPK-115	184-CC-115	174.0
184-CC-115	185-PA-115	103.0
188-SC-115	189-AP-115	153.0
189-AP-115	191-BL-115	144.2
200-BN-115	201-SA-115	152.0
203-SN-115	201-SA-115	114.1
50-AT-230	135-AT-115	101.5
53-RS-230	74-RS-115	107.0
58-BPK-230	183-BPK-115	109.0
63-BN-230	81-BN-69	107.0
113-CM2-115	220-KUD-115	101.2

66

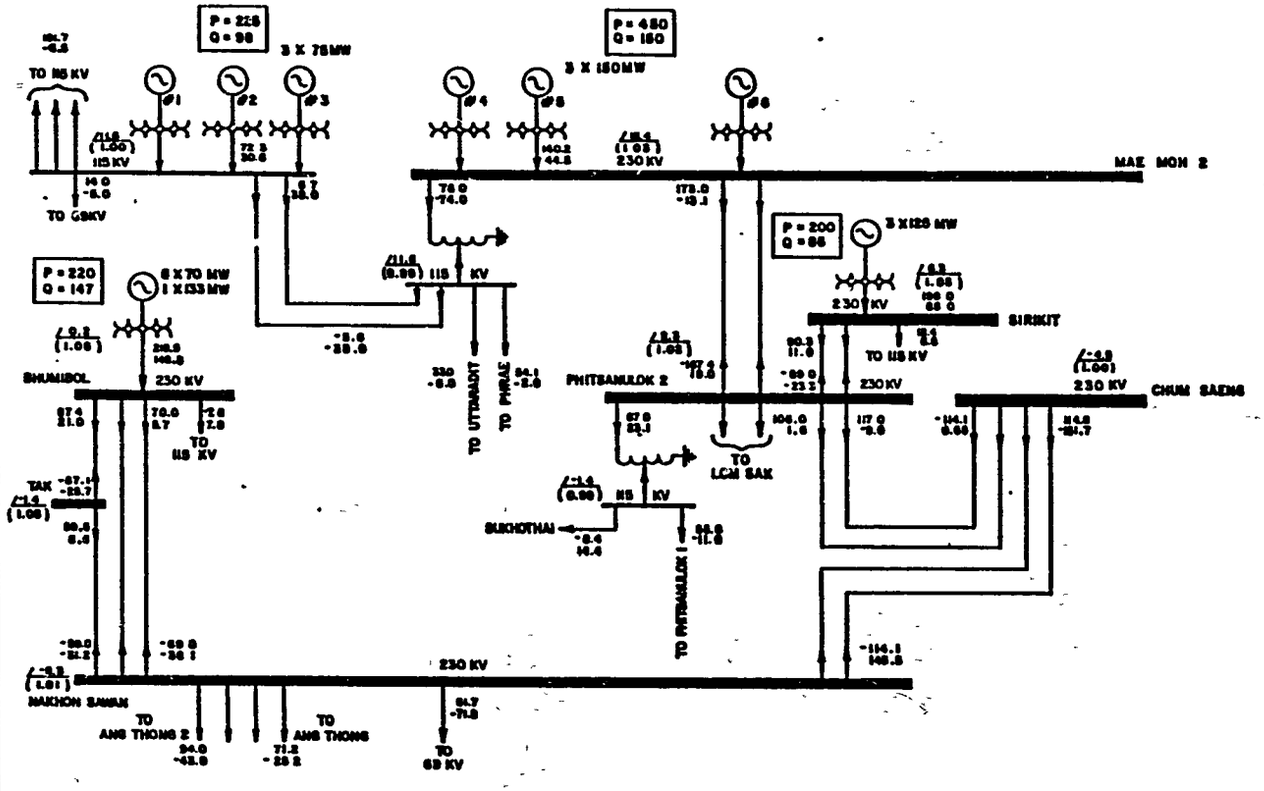

TOTAL LOAD	5184 MW	3070 MVAR
TOTAL LOSSES	152 MW	
TOTAL GENERATION	5336 MW	1660 MVAR

FIGURE 3.1

ZONE	REV	DATE	DESCRIPTION OF REVISION	BY	APPD.

PREPARED UNDER THE RESPONSIBLE SUPERVISION OF

STATE OF

PROF. REG. NO.

SEAL AFFIXED / /

LEMCO ENGINEERS

DWN. CKD. APP SCALE

MAE MON TO MIN BURI 230 KV TRANSMISSION ALTERNATE

EGAT 1986 PEAK LOAD

BASE CASE

CONTRACT NO. DWG. NO. -C- SHEET NO. OF REV.

67

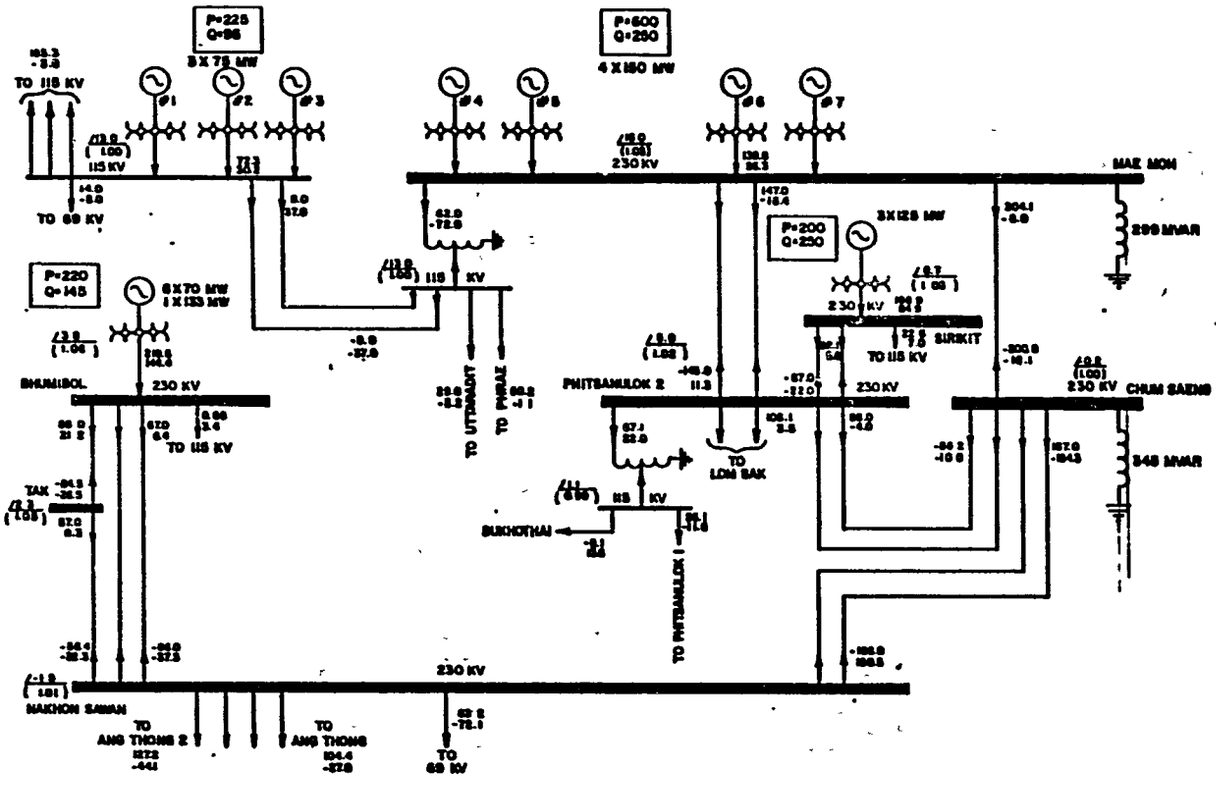

TOTAL LOAD	6197 MW	3078 MVAR
TOTAL LOSSES	150 MW	
TOTAL GENERATION	6347 MW	1538 MVAR

FIGURE 3.2

ZONE	REV	DATE	DESCRIPTION OF REVISION	BY	APPD.

PREPARED UNDER THE RESPONSIBLE SUPERVISION OF

STATE OF

PROF. REG. NO.

SEAL AFFIXED / /

LEMCO ENGINEERING (INTERNATIONAL), INC.
ST. LOUIS, MISSOURI

DWN. | CKD. | APP. | SCALE

MAE MOH TO MIN BURI 230 KV TRANSMISSION ALTERNATE

EGAT 1986 PEAK LOAD
BASE CASE

CONTRACT NO. | DWG. NO. -C- | SHEET NO. OF | REV

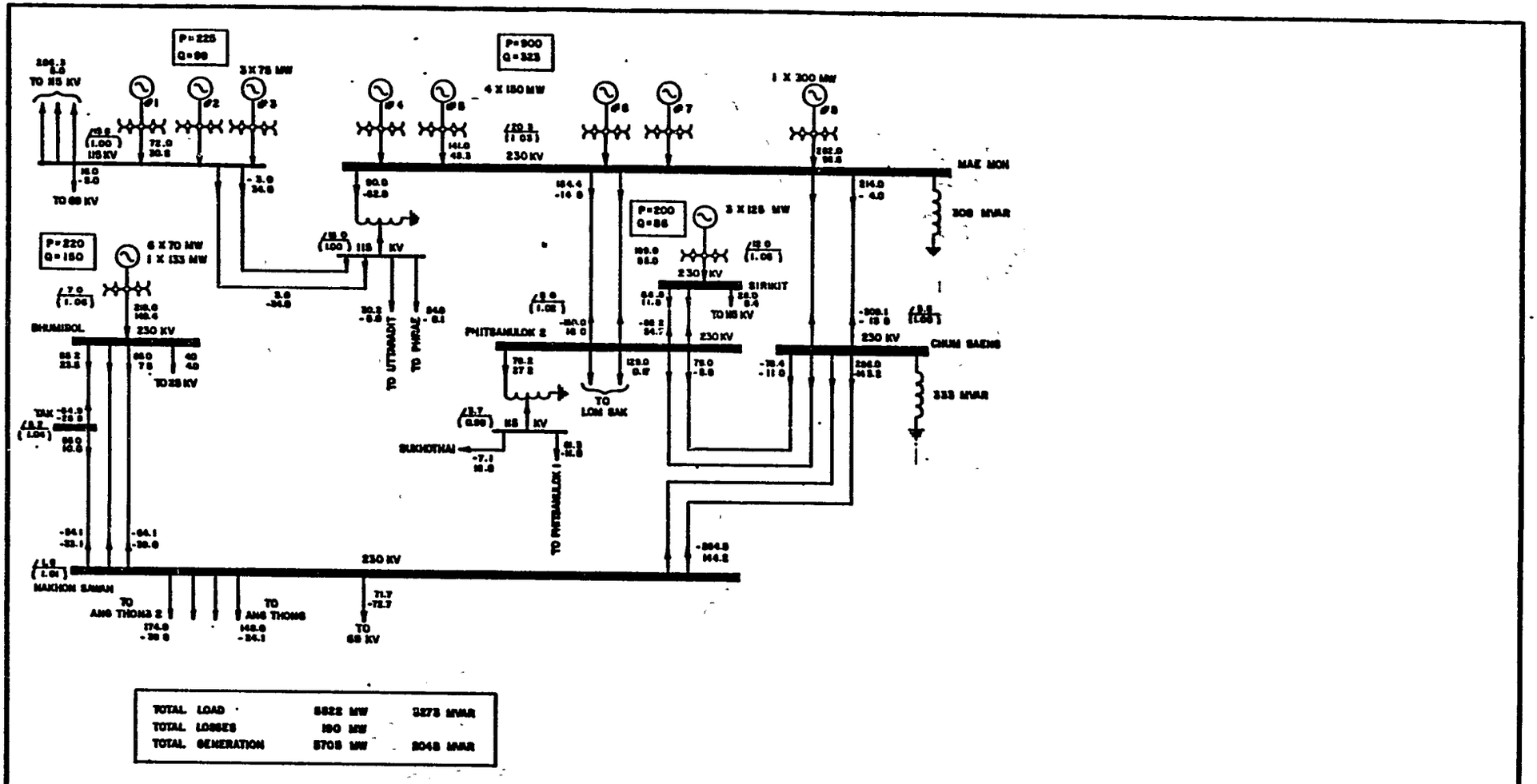

FIGURE 3.3

3-26

ZONE	REV	DATE	DESCRIPTION OF REVISION	BY	APPD.

PREPARED UNDER THE RESPONSIBLE SUPERVISION OF
STATE OF
PROF. REG. NO.
SEAL AFFIXED

LEMCO ENGINEERS (INTERNATIONAL) INC.
ST LOUIS MISSOURI

DWN. RP | CKD. | APP | SCALE

MAE MOH TO MIN BURI 230 KV TRANSMISSION ALTERNATE

EGAT 1987 PEAK LOAD
BASE CASE

CONTRACT NO. | DWG. NO. -C- | SHEET NO. OF | REV.

69

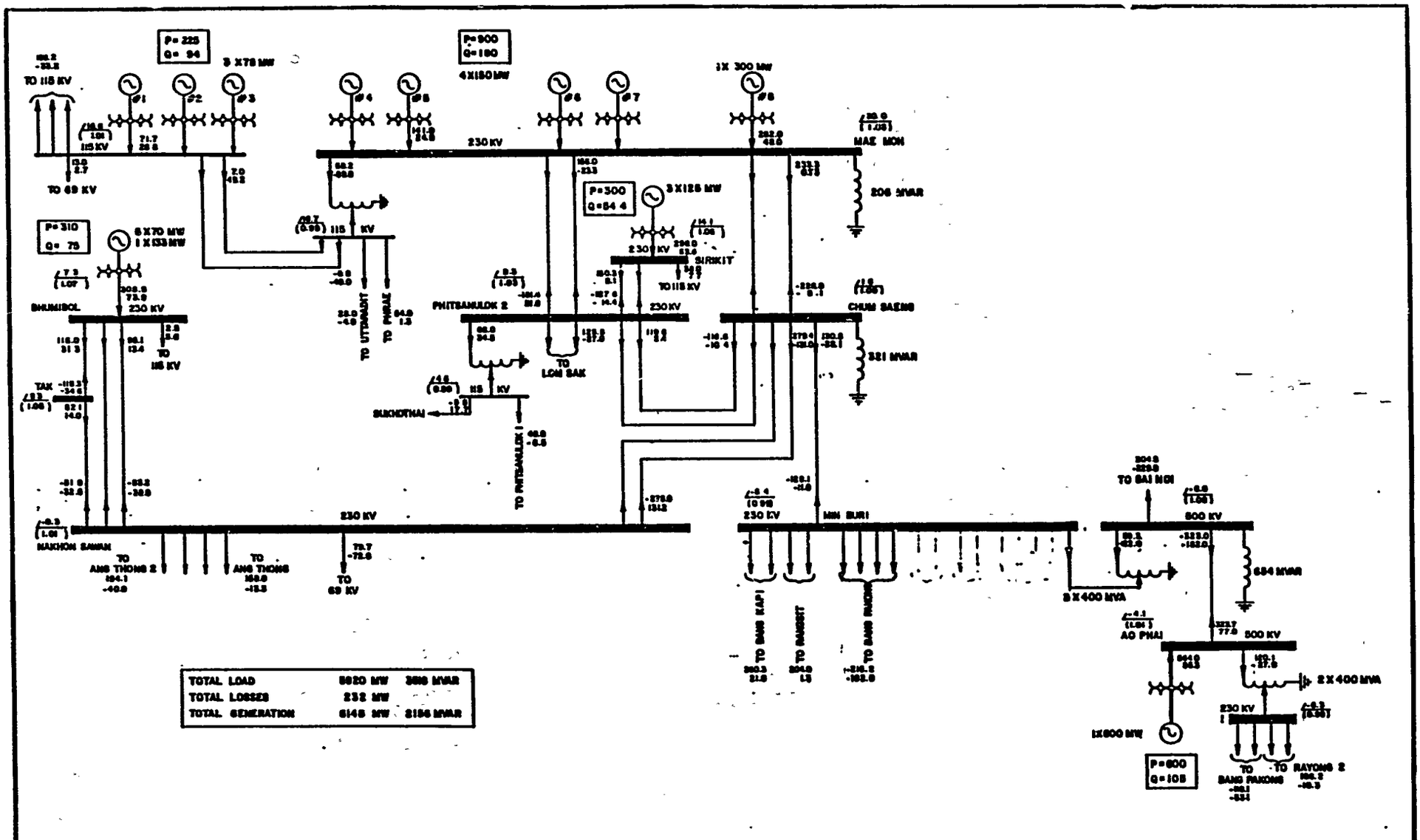

FIGURE 3.4

ZONE	REV	DATE	DESCRIPTION OF REVISION	BY	APPD.

PREPARED UNDER THE RESPONSIBLE SUPERVISION OF

STATE OF

PROF. REG. NO.

SEAL AFFIXED / /

LEMCO ENGINEERS (INTERNATIONAL), INC.
ST LOUIS MISSOURI

DWN. RK | CKD. | APP | SCALE

MAE MON TO MIN BURI 230 KV TRANSMISSION ALTERNATE

EGAT 1988 PEAK LOAD
BASE CASE

CONTRACT NO. | DWG. NO. -C- | SHEET NO. OF | REV.

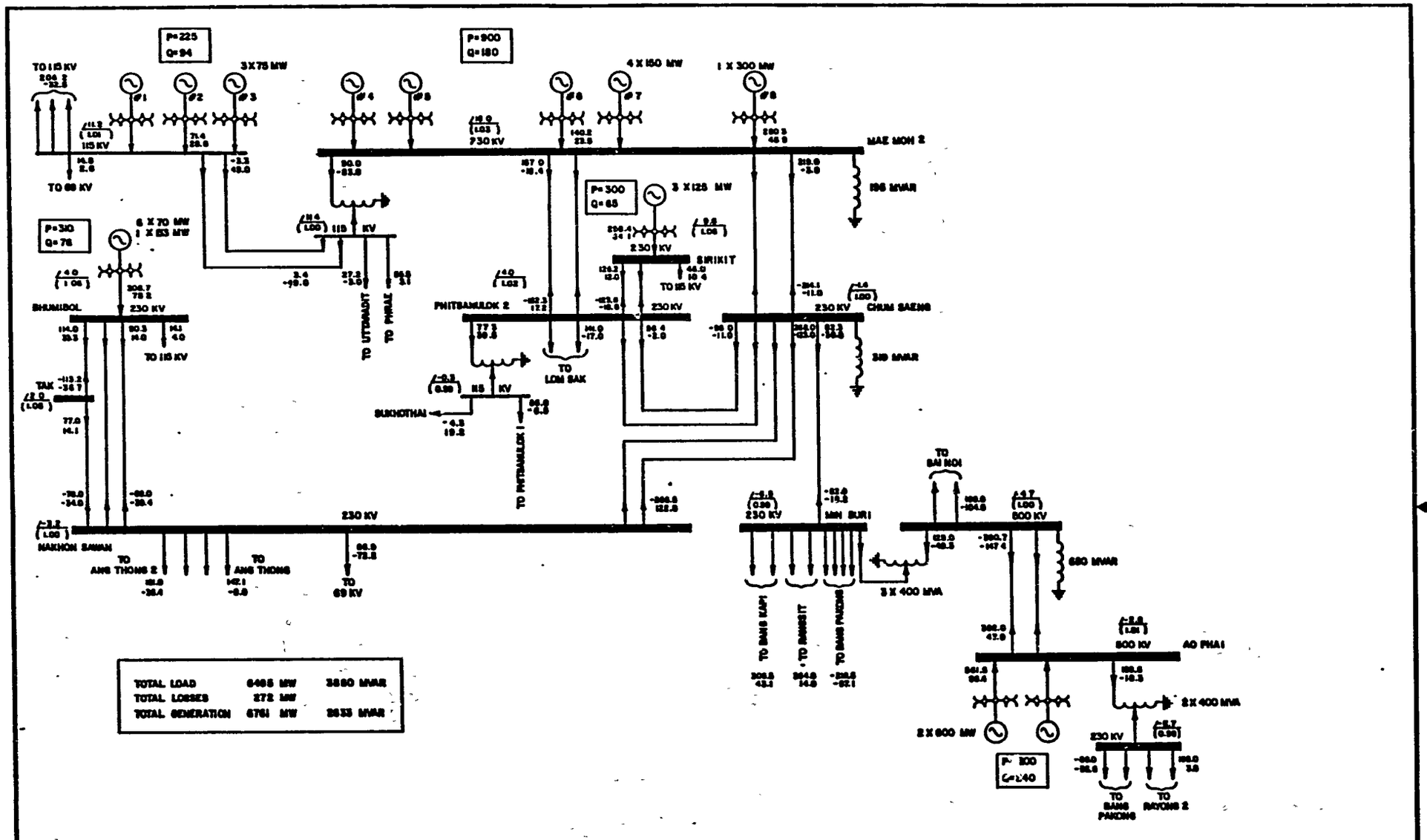

FIGURE 3.5

ZONE	REV	DATE	DESCRIPTION OF REVISION	BY	APPD.

PREPARED UNDER THE RESPONSIBLE SUPERVISION OF

STATE OF

PROF. REG. NO.

SEAL AFFIXED / /

LEMCO ENGINEERS (INTERNATIONAL), INC.
ST LOUIS MISSOURI

DWN. RR | CKD. | APP | DCA

MAE MOH TO MIN BURI 230KV TRANSMISSION ALTERNATE

EGAT 1989 PEAK LOAD
BASE CASE

CONTRACT NO. | DWG. NO. -C- | SHEET NO. OF | REV.

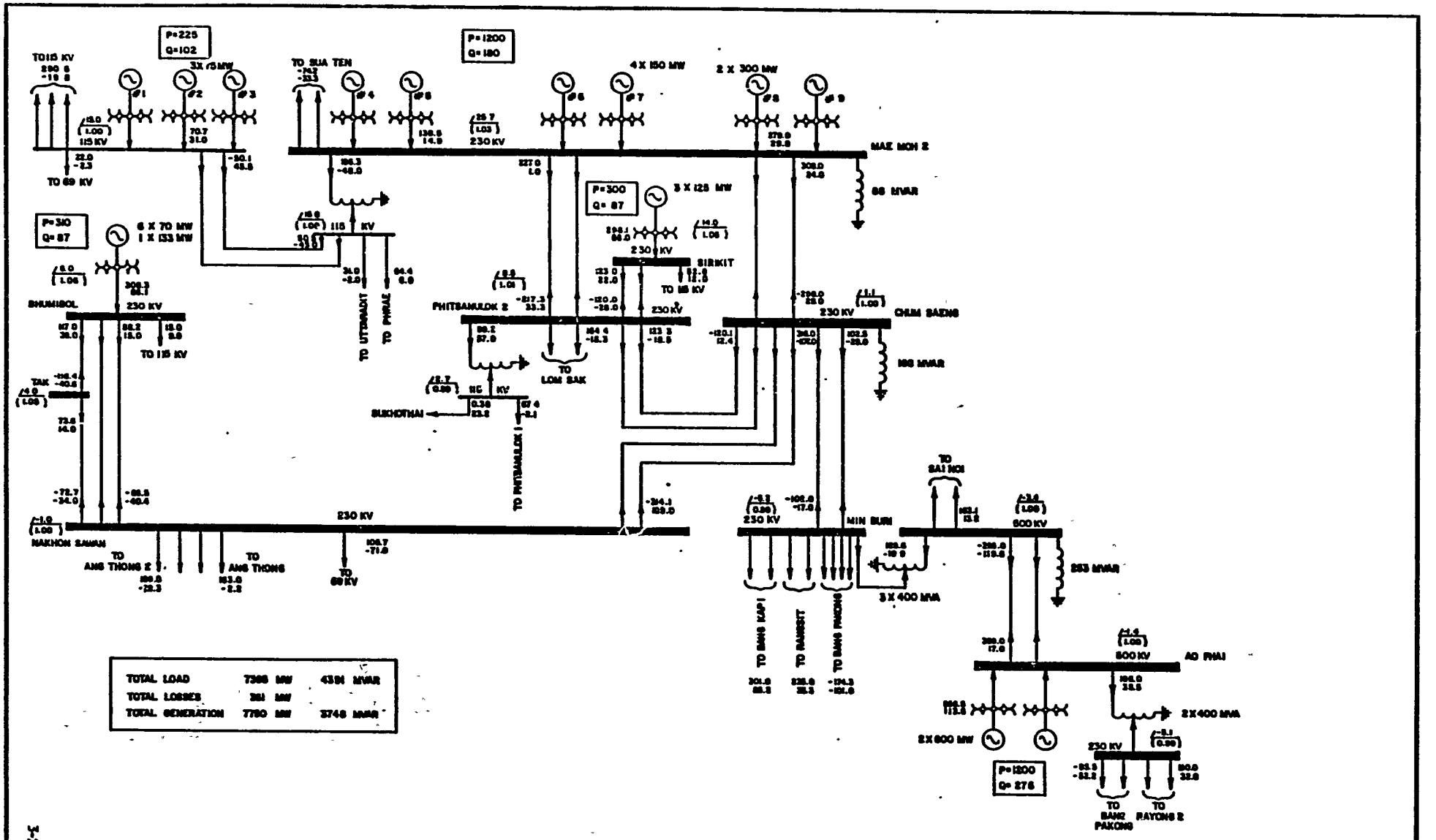

FIGURE 3.6

ZONE	REV	DATE	DESCRIPTION OF REVISION	BY	APPD.

PREPARED UNDER THE RESPONSIBLE SUPERVISION OF

STATE OF

PROF. REG. NO.

SEAL AFFIXED / /

LEMCO ENGINEERS (INTERNATIONAL) INC.
ST LOUIS MISSOURI

DWN. RR | CKD. | APP | SCALE

MAE MOH TO MIN BURI 230 KV TRANSMISSION ALTERNATE

EGAT 1991 PEAK LOAD
BASE CASE

CONTRACT NO. | DWG. NO. -C- | SHEET NO. OF | REV

72

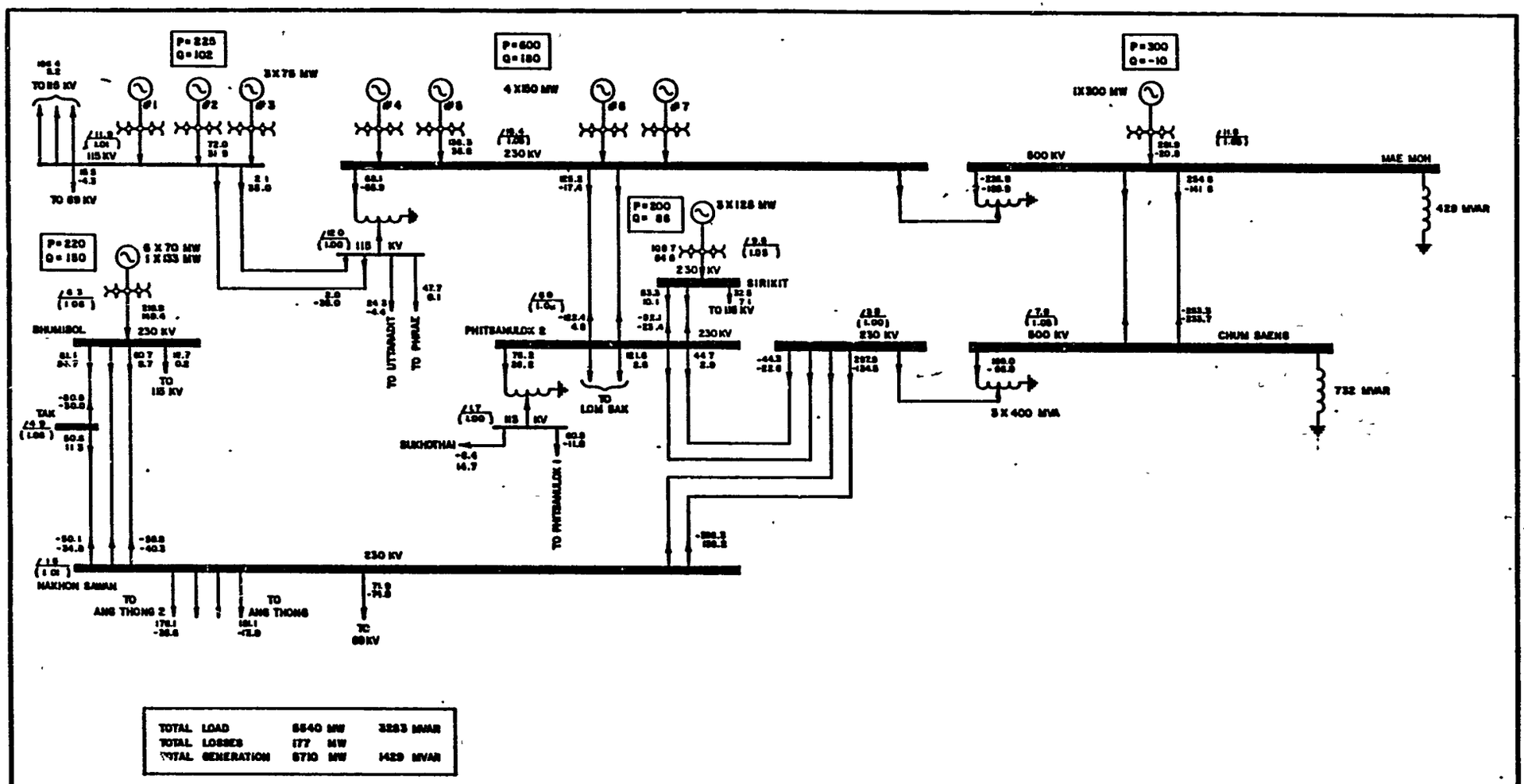

TOTAL LOAD	6540 MW	3283 MVAR
TOTAL LOSSES	177 MW	
TOTAL GENERATION	6710 MW	1429 MVAR

FIGURE 3.7

3-30

ZONE	REV	DATE	DESCRIPTION OF REVISION	BY	APPD.

PREPARED UNDER THE RESPONSIBLE SUPERVISION OF

STATE OF

PROF. REG. NO.

SEAL AFFIXED / /

LEMCO ENGINEERS (INTERNATIONAL) INC.
ST LOUIS MISSOURI

DWN. RP | CKD. | APP | SCALE

MAE MOH TO MIN BURI 500 KV TRANSMISSION ALTERNATE

EGAT 1987 PEAK LOAD
BASE CASE

CONTRACT NO. | DWG. NO. -C- | SHEET NO. OF | REV

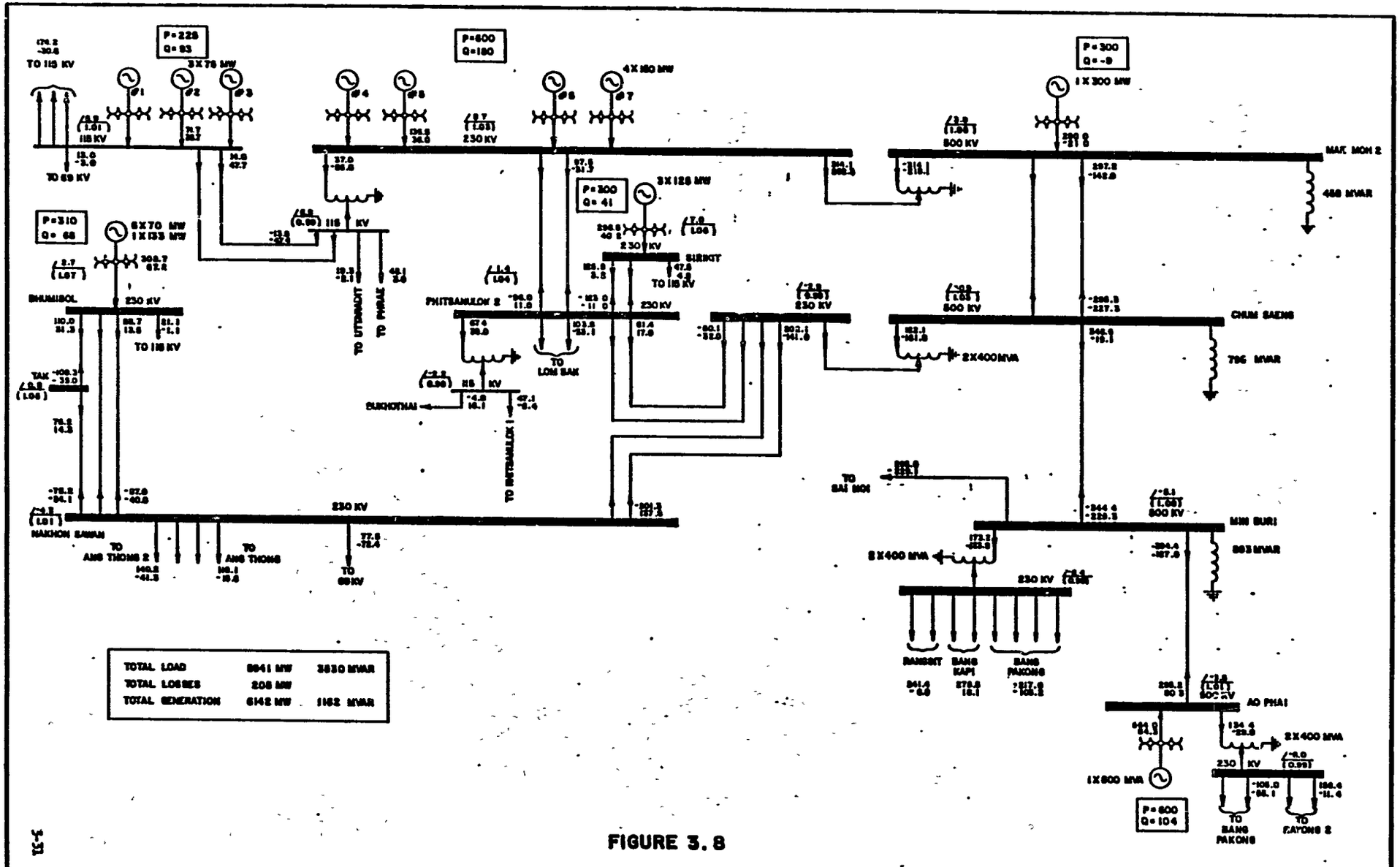

FIGURE 3.8

3-31

ZONE	REV.	DATE	DESCRIPTION OF REVISION	BY	APPD.

PREPARED UNDER THE RESPONSIBLE SUPERVISION OF

STATE OF

PROF. REG. NO.

SEAL APPLIED / /

LEMCO ENGINEERS (INTERNATIONAL), INC.
ST. LOUIS, MISSOURI

DWN. RR | CKD. | APP. | SCALE

MAE MOH TO MIN BURI 500 KV TRANSMISSION ALTERNATE

EGAT 1988 PEAK LOAD
BASE CASE

CONTRACT NO. | DWG. NO. -C- | SHEET NO. OF | REV.

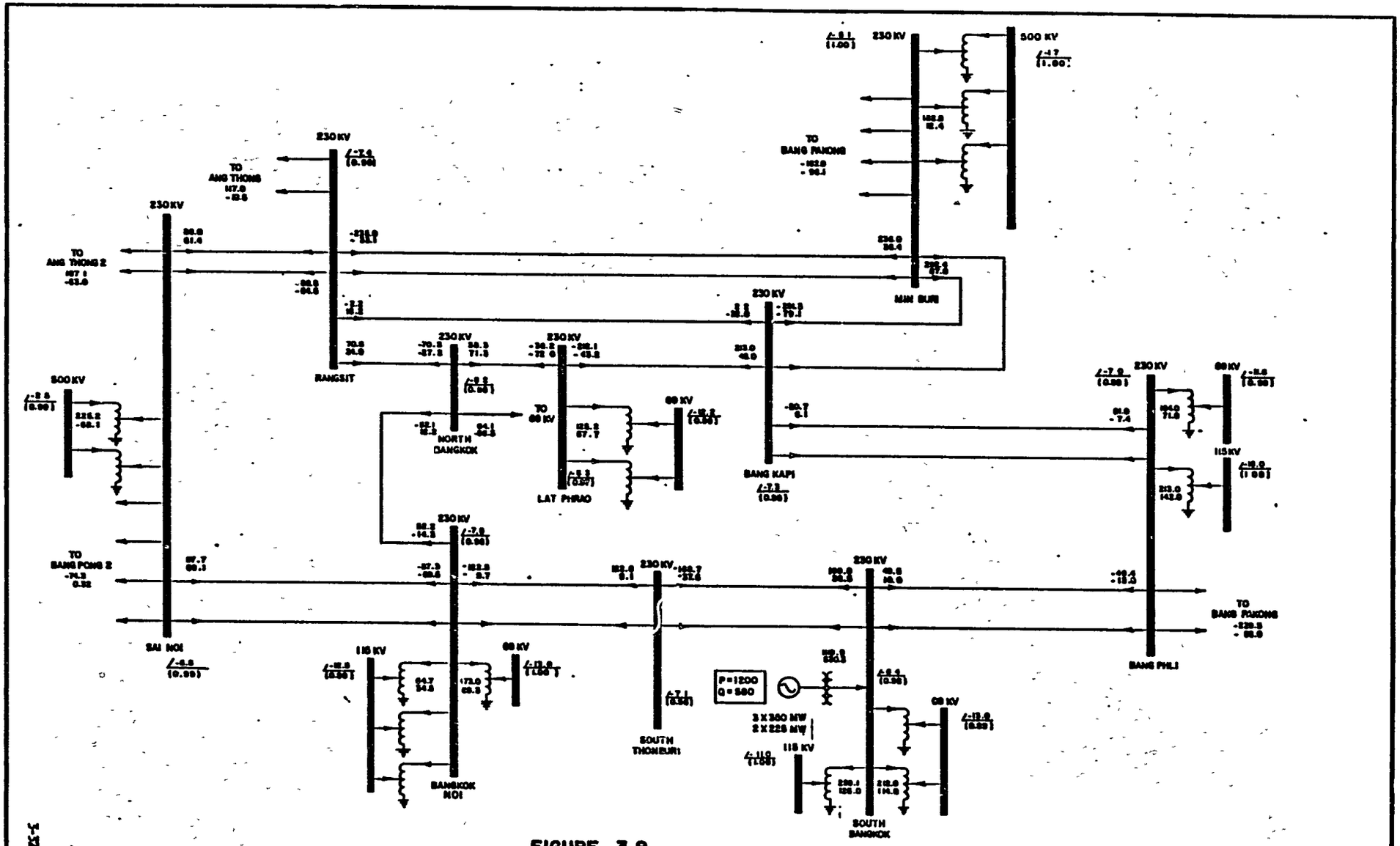

FIGURE 3.9

ZONE	REV	DATE	DESCRIPTION OF REVISION	BY	APPD.

PREPARED UNDER THE RESPONSIBLE SUPERVISION OF

STATE OF

PROF. REG. NO.

SEAL AFFIXED / /

LEMCO ENGINEERS (INTERNATIONAL), INC.
ST LOUIS MISSOURI

DWN. | CKD. | APP | SCALE | CONTRACT NO. | DWG. NO. -C- | SHEET NO. OF | REV

GREATER BANGKOK AREA POWER SYSTEM

EGAT 1991 PEAK LOAD
BASE CASE

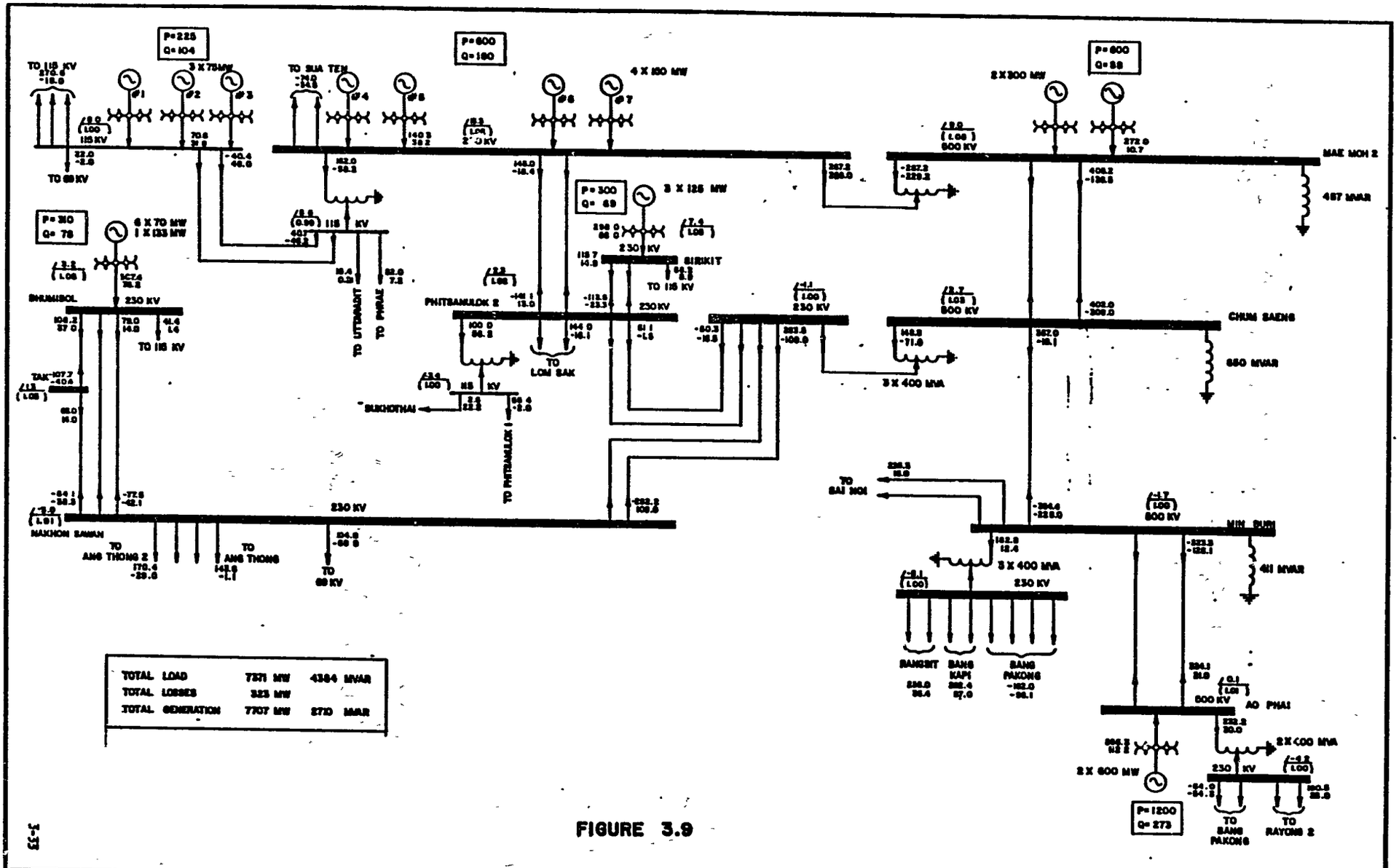

FIGURE 3.9

3-33

ZONE	REV	DATE	DESCRIPTION OF REVISION	BY	APPD.

PREPARED UNDER THE RESPONSIBLE SUPERVISION OF

STATE OF

PROF. REG. NO.

SEAL APPLIED / /

LEMCO ENGINEERS (INTERNATIONAL), INC.
ST LOUIS MISSOURI

DWN. RP | CKD. | APP | SCALE

MAE MOH TO MIN BURI 500 KV TRANSMISSION ALTERNATE

EGAT 1991 PEAK LOAD
BASE CASE

CONTRACT NO. | DWG. NO. -C- | SHEET NO. OF | REV.

96

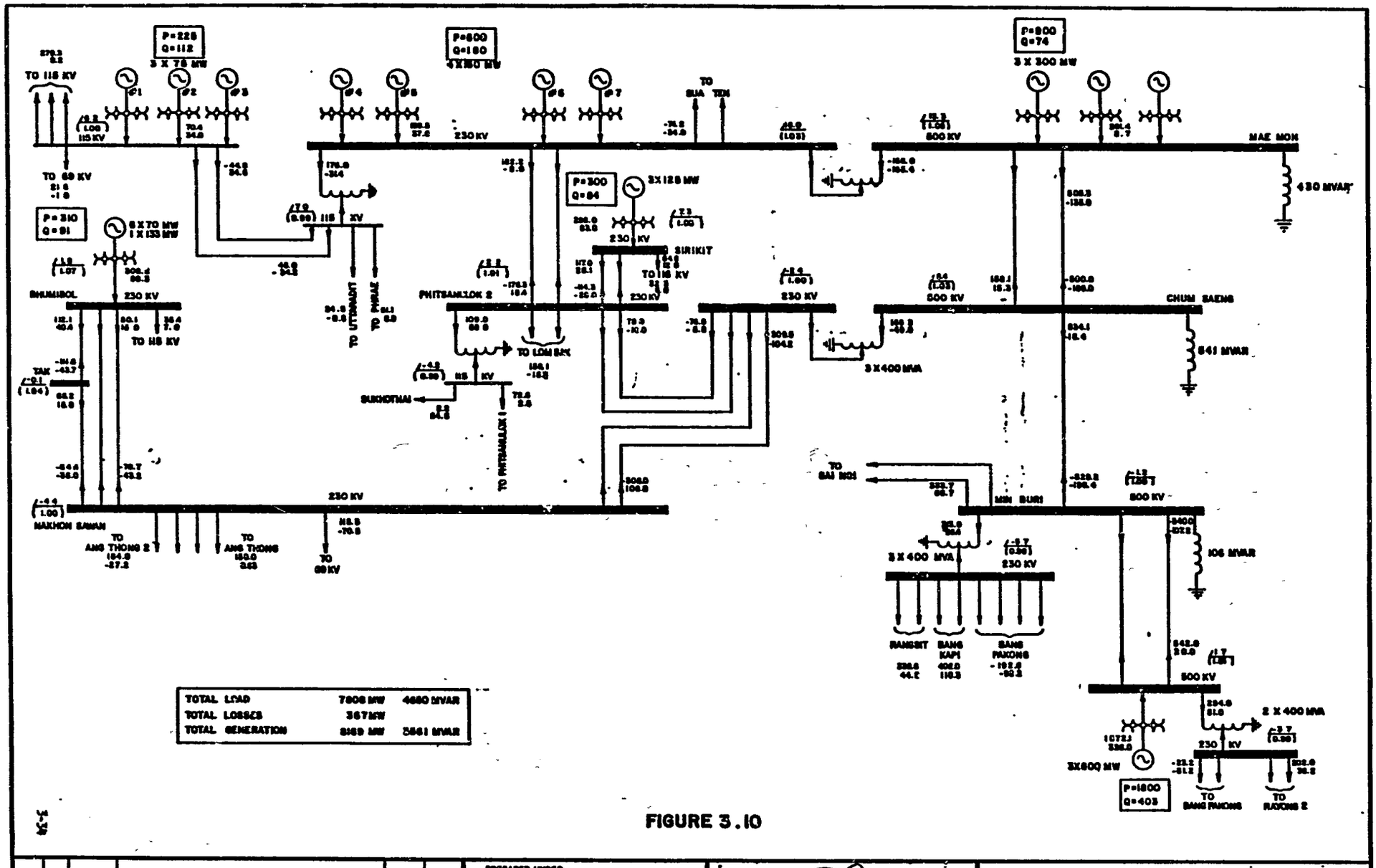

FIGURE 3.10

ZONE	REV	DATE	DESCRIPTION OF REVISION	BY	APPD.

PREPARED UNDER THE RESPONSIBLE SUPERVISION OF

STATE OF

PROF REG. NO.

SEAL AFFIXED / /

LEMCO ENGINEERS (SYTSERMANSALL, INC.)
ST LOUIS, MISSOURI

DWN. RR | CKD. | APP. | SCALE

MAE MON TO MIN BURI 500 KV TRANSMISSION ALTERNATE

EGAT 1992 PEAK LOAD
BASE CASE

CONTRACT NO. | DWG. NO. -C- | SHEET NO. OF | REV.

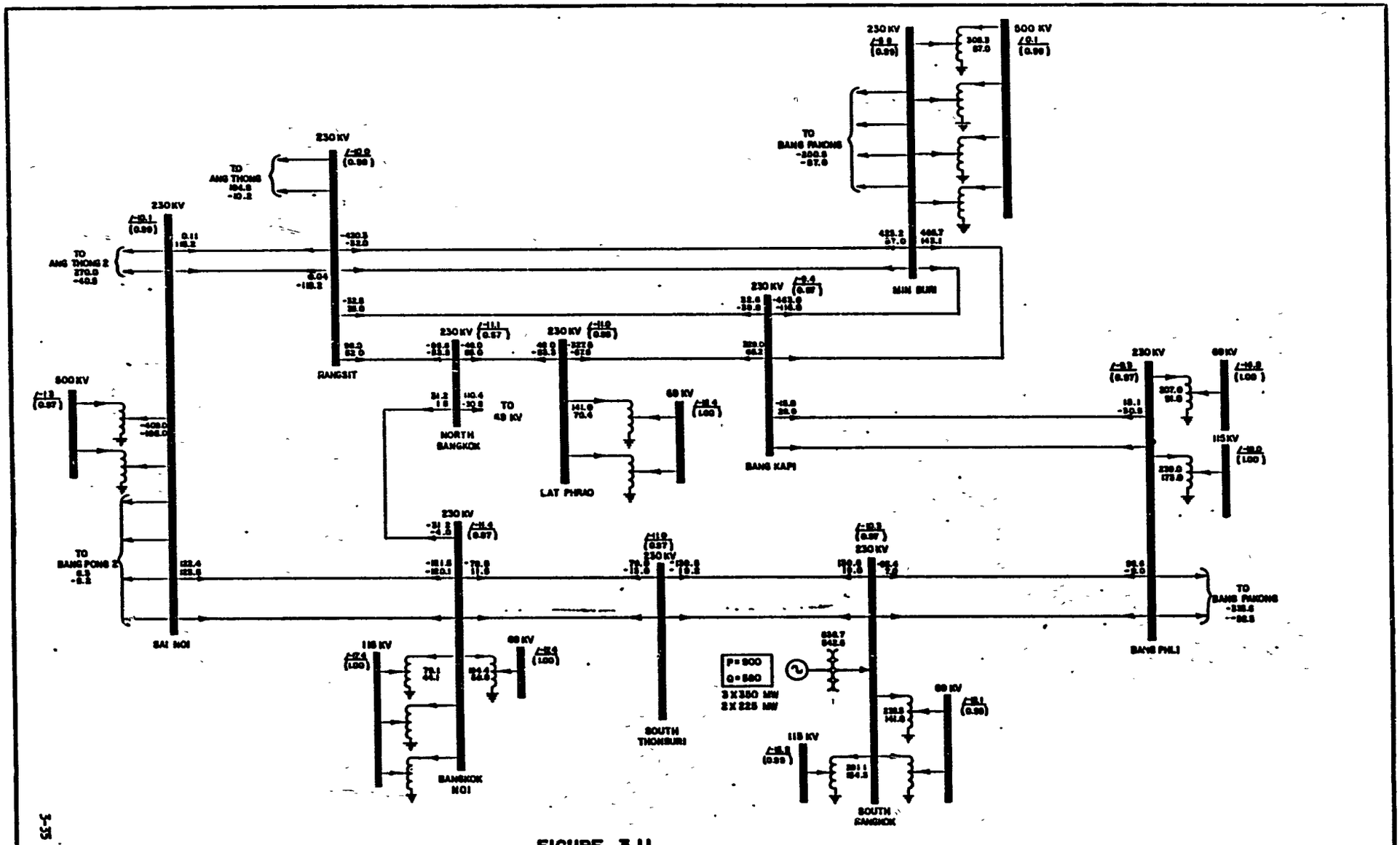

FIGURE 3.11

ZONE	REV	DATE	DESCRIPTION OF REVISION	BY	APPD.

PREPARED UNDER THE RESPONSIBLE SUPERVISION OF

STATE OF

PROF. REG. NO.

SEAL AFFIXED / /

LEMCO ENGINEERS (INTERNATIONAL), INC.
ST. LOUIS, MISSOURI

DWN. | CKD. | APP | SCALE

GREATER BANGKOK AREA POWER SYSTEM

EGAT 1993 PEAK LOAD
BASE CASE

CONTRACT NO. | DWG. NO. -C- | SHEET NO. OF | REV

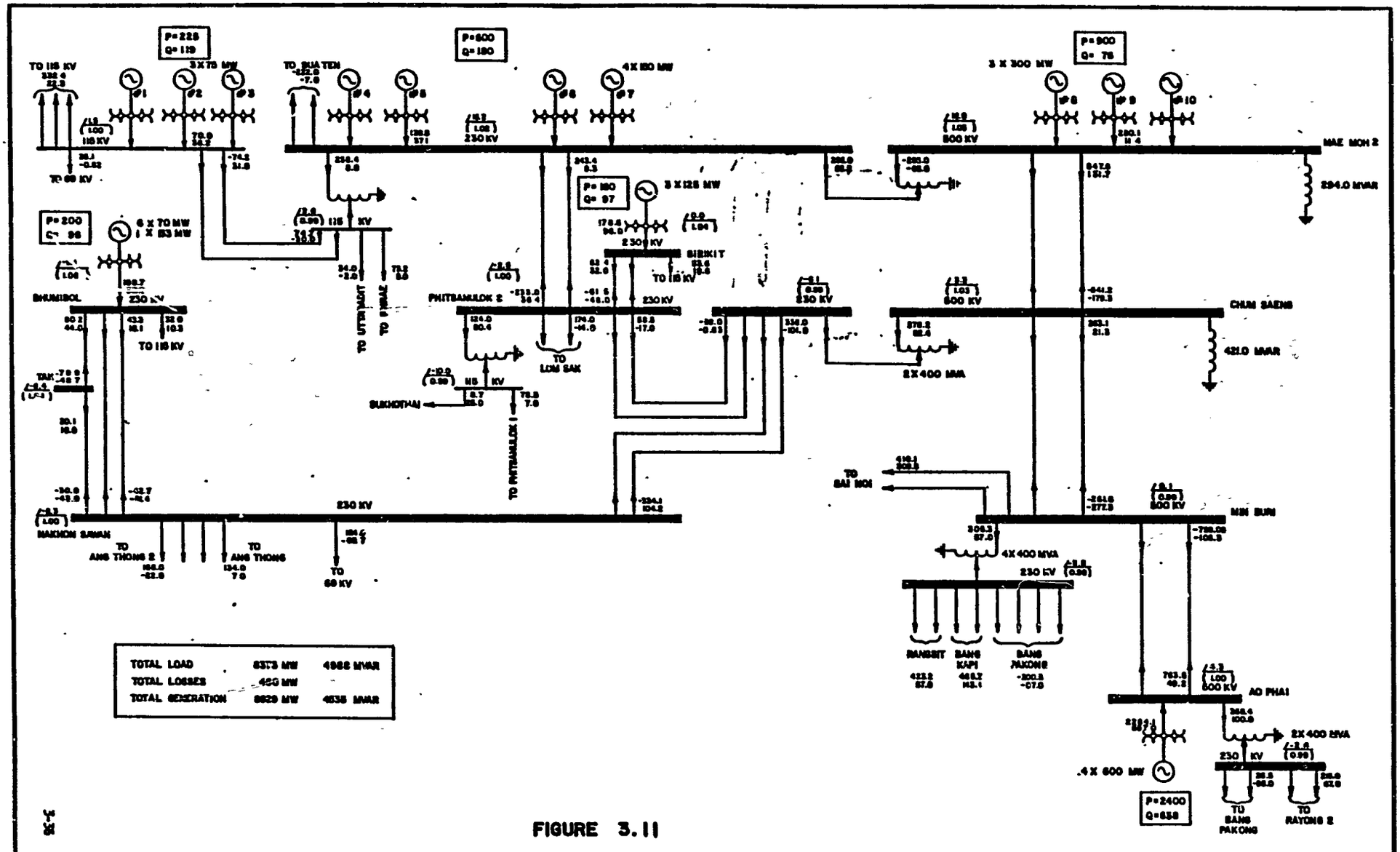

FIGURE 3.11

3-36

ZONE	REV	DATE	DESCRIPTION OF REVISION	BY	APPD.

PREPARED UNDER THE RESPONSIBLE SUPERVISION OF

STATE OF

PROF. REG. NO.

SEAL AFFIXED

LEMCO ENGINEERS (INTERNATIONAL), INC.
ST. LOUIS, MISSOURI

DWN. | CKD. | APP | SCALE

MAE MOH TO MIN BURI 500 KV TRANSMISSION ALTERNATE

EGAT 1993 PEAK LOAD
BASE CASE

CONTRACT NO. | DWG. NO. -C- | SHEET NO. OF | REV

TABLE: 3-8

SUMMARY OF EGAT TRANSIENT STABILITY STUDIES

CASE	FAULT SIMULATION		PREFAULT FLOW	FAULT CLEARING TIME	RESULTS OF TRANSIENT STABILITY	
	FAULT LOCATION	T-LINE			RELATIVE ANGLE	JUDGEMENT
1986 1-230 kV Line from MM-CS	MM	MM-CS	204	3	Mae Moh 17=88° Mae Moh 13=76° Srinagrind=15° South Bangkok=35° Bang Pakong=Ref. Sirikit=50° Blumibal=39°	Stable
1987 2-230 kV Lines from MM-CS	MM	MM-CS	214	4	Mae Moh 17=112° Mae Moh 13=100° South Bangkok=40° Bang Pakong=Ref.	Stable
1987 2-230 kV Lines from MM-CS	CS	CS-NS	286	4	Mae Moh 17=100° Mae Moh 13=86° South Bangkok=38° Bang Pakong=Ref.	Stable

TABLE: 3-9

SUMMARY OF EGAT TRANSIENT STABILITY STUDIES

CASE	FAULT SIMULATION		PREFAULT FLOW	FAULT CLEARING TIME	RESULTS OF TRANSIENT STABILITY	
	FAULT LOCATION	T-LINE			RELATIVE ANGLE	JUDGEMENT
1987 1-500 kV Line from MM-CS	MM	MM-CS	457	3	Mae Moh 22>200° Mae Moh 17>200° Mae Moh 13>200° Srinagarind=22° South Bangkok=37° Bang Pakong=Ref.	Unstable
1987 2-500 kV Lines from MM-CS	MM	MM-CS	248	3	Mae Moh 22=82° Mae Moh 17=72° Mae Moh 13=68° Srinagrind=16° South Bangkok=32° Bang Pakong=Ref.	Stable
1987 2-500 kV Lines from MM-CS	CS	CS-NS	295	3	Mae Moh 22=78° Mae Moh 17=74° Mae Moh 13=66° Srinagrind=16° South Bangkok=34° Bang Pakong-Ref.	Stable

TABLE: 3-10

SUMMARY OF EGAT TRANSIENT STABILITY STUDIES

CASE	FAULT SIMULATION		PREFAULT FLOW	FAULT CLEARING TIME	RESULTS OF TRANSIENT STABILITY	
	FAULT LOCATION	T-LINE			RELATIVE ANGLE	JUDGEMENT
1989 2-500 kV Lines from MM-CS and 1-500 kV Line from CS-MB	MM	MM-CS	275	3	Mae Moh 22=81° Mae Moh 17-66° Mae Moh 13=57° Srinagrind=4° South Bangkok=23° Bang Pakong=Ref. Ao Phai=66°	Stable
1989 2-500 kV Lines from MM-CS and 1-500 kV Line from CS-MB	CS	CS-MB	221	3	Mae Moh 22=75° Mae Moh 17=64° Mae Moh 13=52° Srinagrind=-8° South Bangkok=21° Bang Pakong=Ref. Ao Phai=68°	Stable
1991 2-230 kV Lines from MM-CS and CS-MB	MM	MM-CS	307	3	Mae Moh 17>200° Mae Moh 13>200° Srinagarind=26° South Bangkok=32° Bang Pakong=Ref. Ing Yom >200° Ao Phai=76°	Unstable

TABLE: 3-11

SUMMARY OF EGAT TRANSIENT STABILITY STUDIES

CASE	FAULT SIMULATION		PREFAULT FLOW	FAULT CLEARING TIME	RESULTS OF TRANSIENT STABILITY	
	FAULT LOCATION	T-LINE			RELATIVE ANGLE	JUDGEMENT
1991 2-230 kV Lines from MM-CS and CS-MB	CS	CS-MB	101	3	Mae Moh 17>200° Mae Moh 13>200° Srinagarind=34° South Bangkok=38° Bang Pakong=Ref. Ing Yom >200° Ao Phai=78°	Unstable
1992 2-500 kV Lines from MM-CS and 1-500 kV Line from CS-MB	MM	MM-CS	502	3	Mae Moh 22=105° Mae Moh 17=95° Mae Moh 13=95° Srinagrind=16° South Bangkok=28° Bang Pakong=Ref. Ing Yom=113° Ao Phai=79°	Stable
1993 2-500 kV Lines from MM-CS and CS-MB	MM	MM-CS	567	3	Mae Moh 22=108° Mae Moh 17=104° Mae Moh 13-86° Srinagrind=14° South Bangkok=26° Bang Pakong=Ref. Ing Yom=124° Ao Phai=84°	Stable

TABLE: 3-12

SUMMARY OF EGAT TRANSIENT STABILITY STUDIES

CASE	FAULT SIMULATION		PREFAULT FLOW	FAULT CLEARING TIME	RESULTS OF TRANSIENT STABILITY	
	FAULT LOCATION	T-LINE			RELATIVE ANGLE	JUDGEMENT
1993 2-500 kV Lines from MM-CS and CS-MB	CS	CS-MB	214	3	Mae Moh 22=100° Mae Moh 17=96° Mae Moh 13=82° Srinagrind=14° South Bangkok=28° Bang Pakong=Ref. Ing Yom=116° Ao Phai-84°	Stable

FIGURE 3-12

EGAT 1986 TRANS. STAB. STUDY BASED ON TS86RD2, FAULT AT MM-230 (MM-CS) PLOT OF GENERATOR ANGLES VS TIME

CHARACTER CODES FOR GENERATORS R = 6-BPK-21 1 S = 145- SB-211 N = 147- SNR-17 B = 150- BB-134

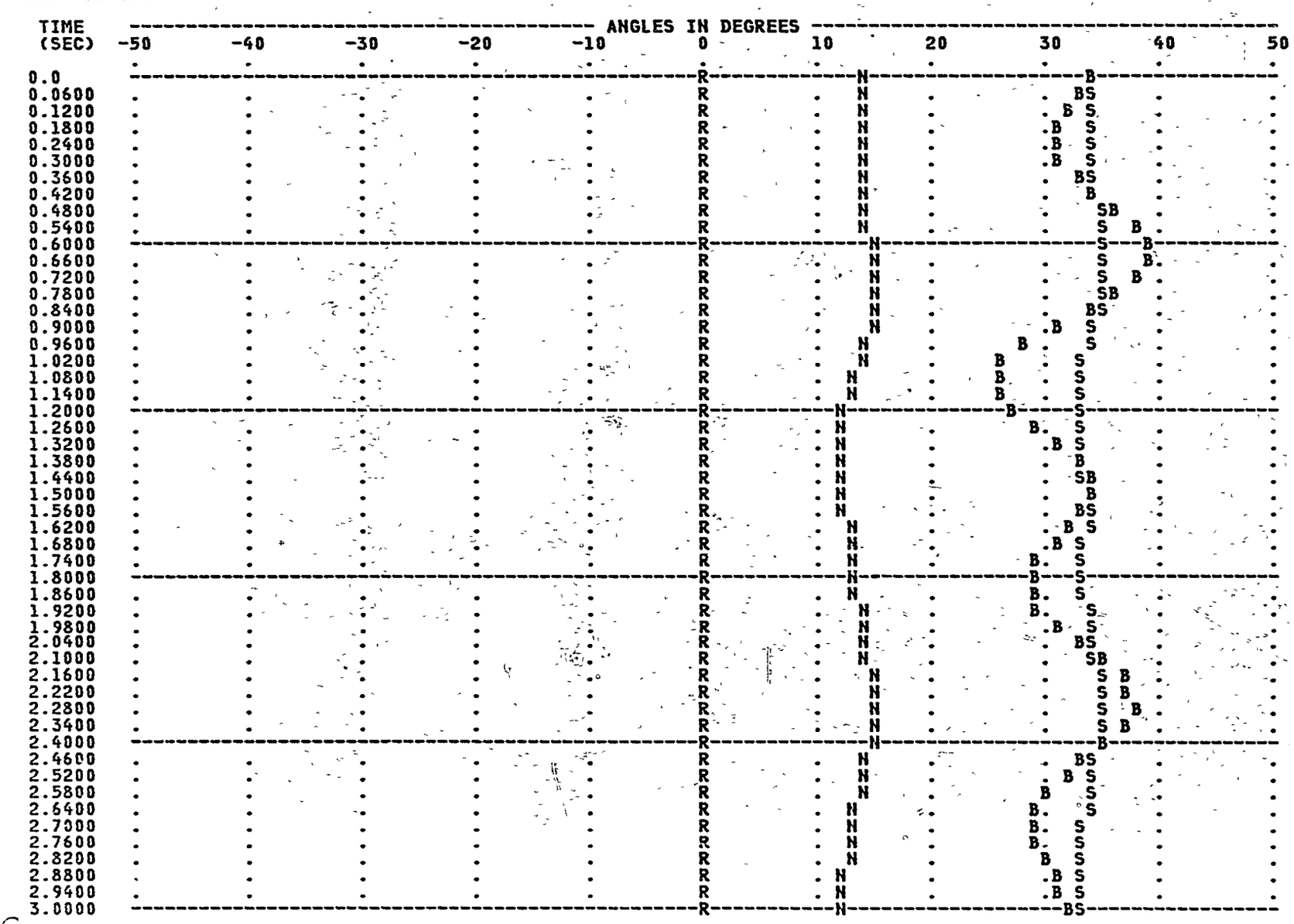

FIGURE 3-12

EGAT 1986 TRANS. STAB. STUDY BASED ON TS86RD2, FAULT AT MM-230 (MM-CS) PLOT OF GENERATOR ANGLES VS TIME

CHARACTER CODES FOR GENERATORS K = 151- SK-134 T = 152- MM13 4 O = 153- MM17 4

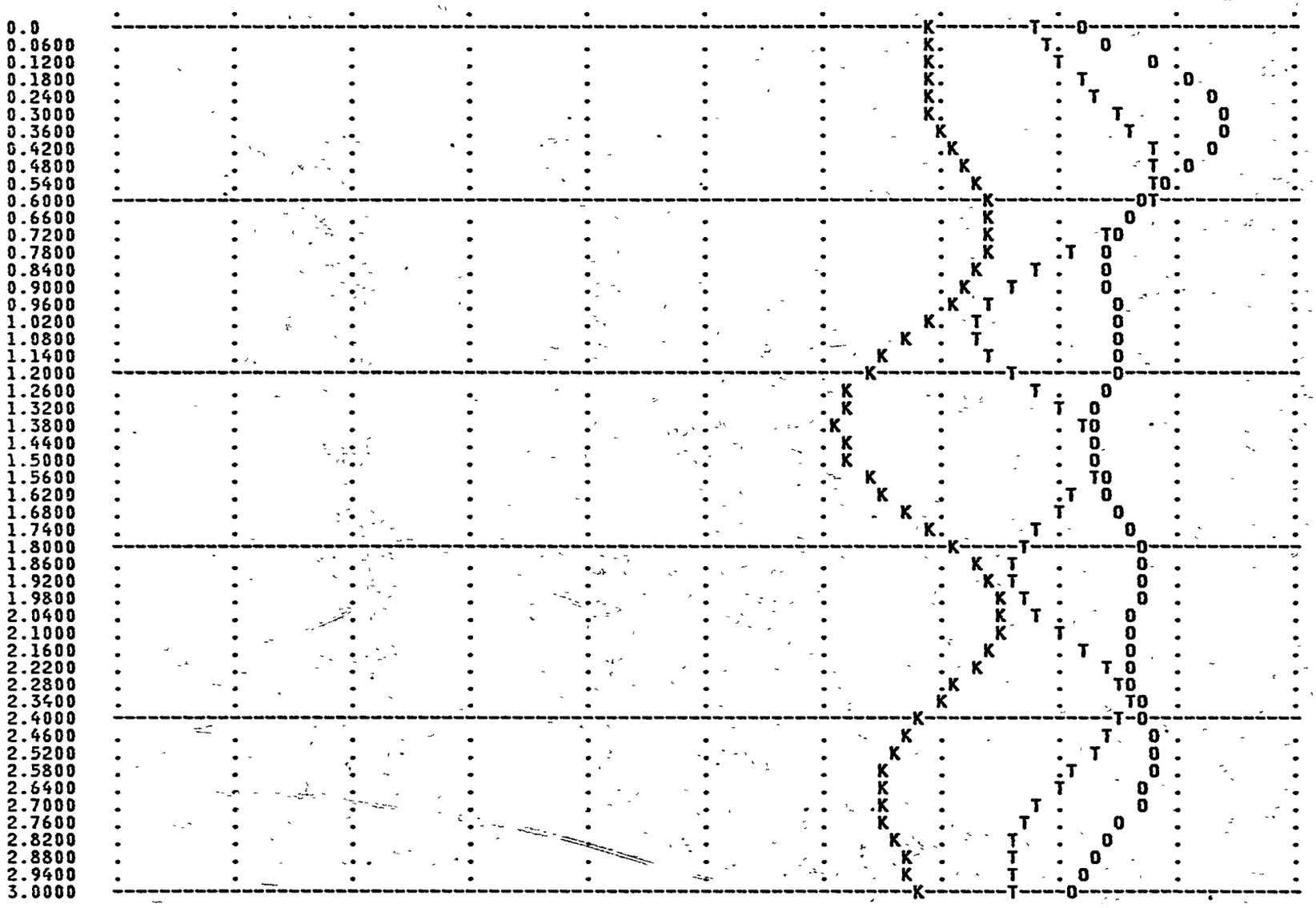

FIGURE 3-13

EGAT 1987 TRANS. STAB. STUDY BASED ON TS87RD8, FAULT AT MM-230 (MM-CS) PLOT OF GENERATOR ANGLES VS TIME

CHARACTER CODES FOR GENERATORS R = 6-BPK-21 1 S = 145- SB-211 T = 152- MM13 4 O = 153- MM17 4

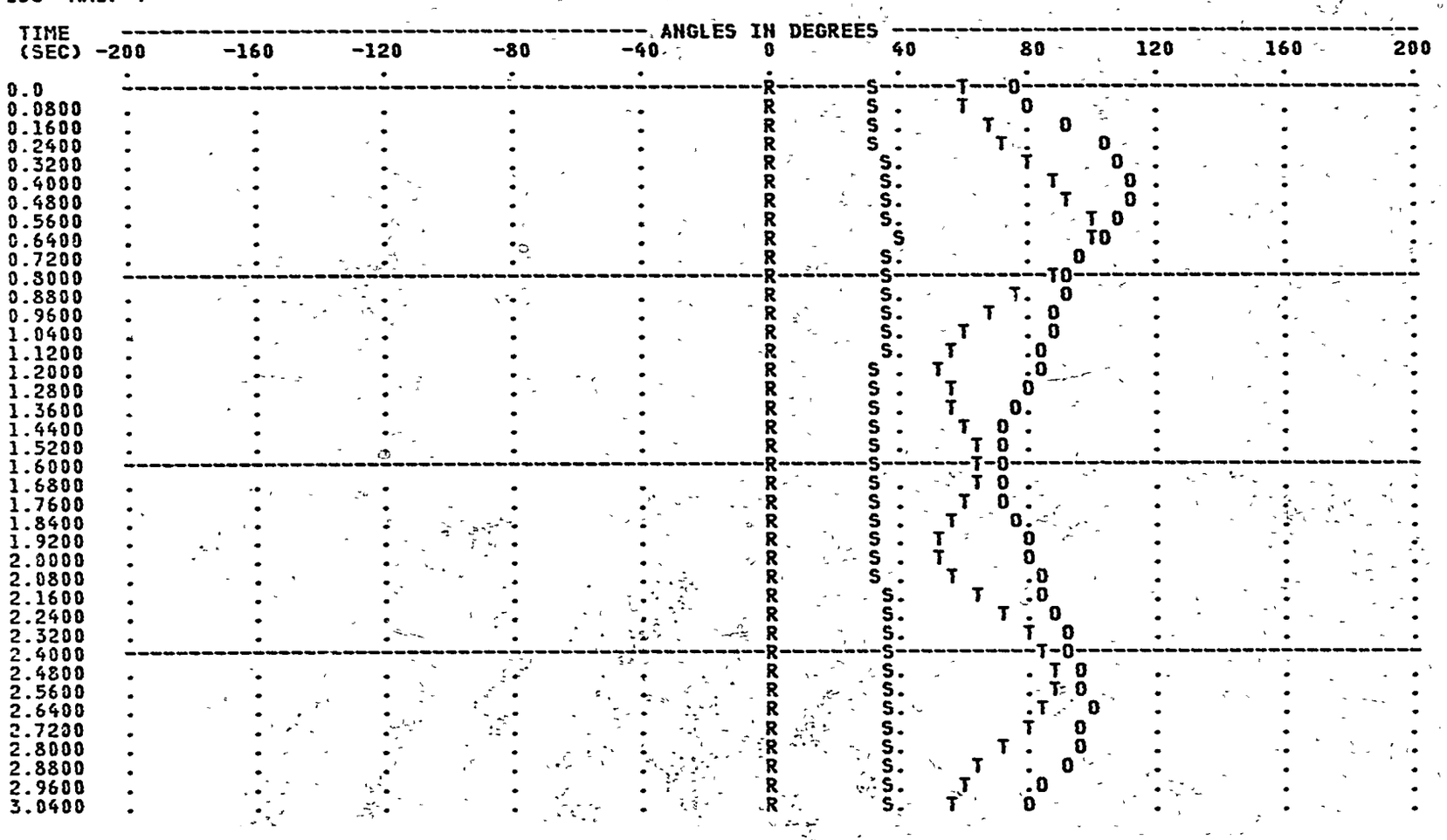

FIGURE 3-14

EGAT 1987 TRANS. STAB. STUDY BASED ON TS87RD7, FAULT AT CS-230 (CS-NS) PLOT OF GENERATOR ANGLES VS TIME

CHARACTER CODES FOR GENERATORS R = 6-BPK-21 1 S = 145- SB-211 T = 152- MM13 4 O = 153- MM17 4

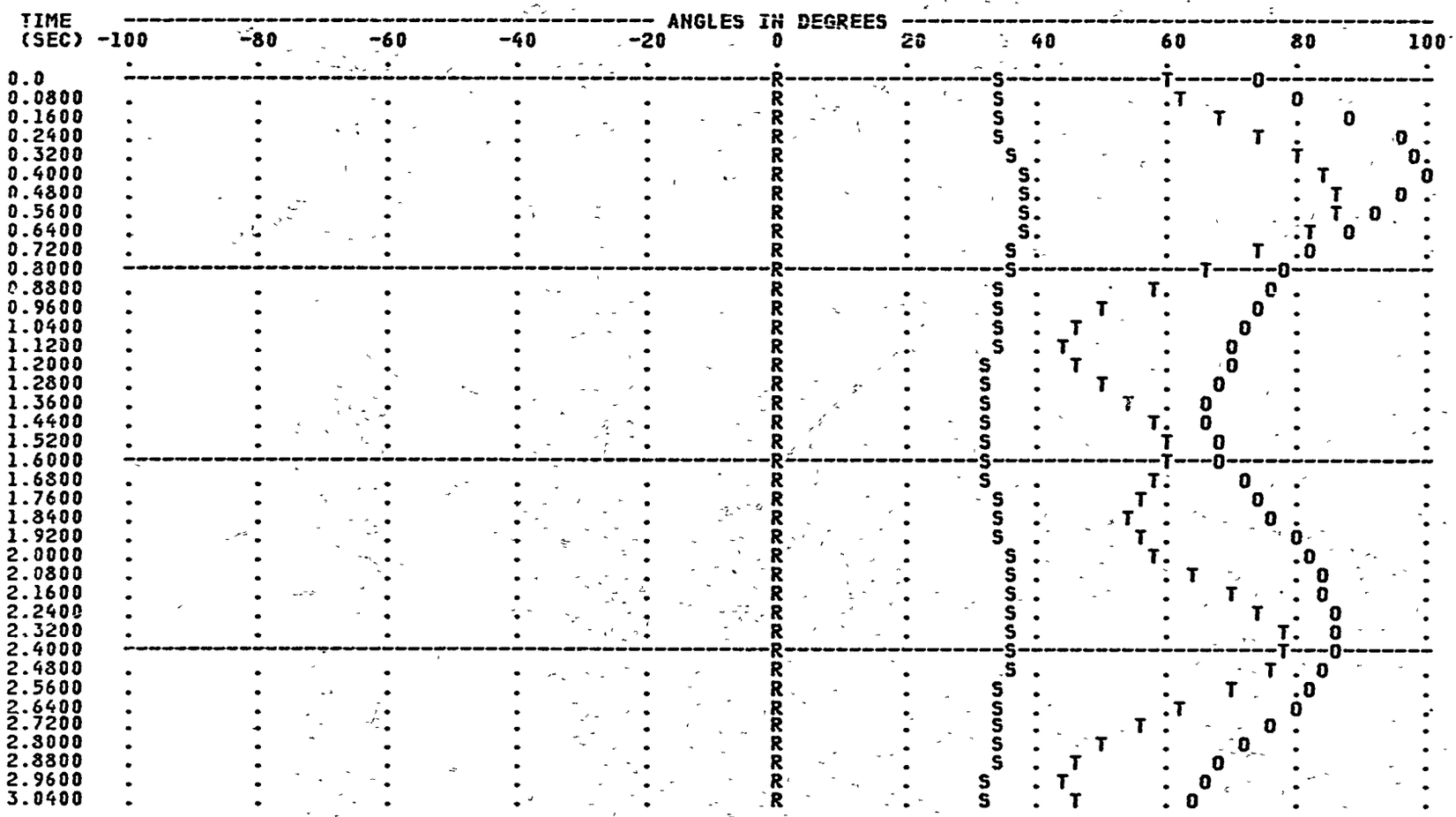

FIGURE 3-15

EGAT 1987 TRANS. STAB. STUDY BASED ON TS87RD6, FAULT AT MM-500 (MM-CS) PLOT OF GENERATOR ANGLES VS TIME

CHARACTER CODES FOR GENERATORS O = 153- MM17 4 M = 154- MM22 4

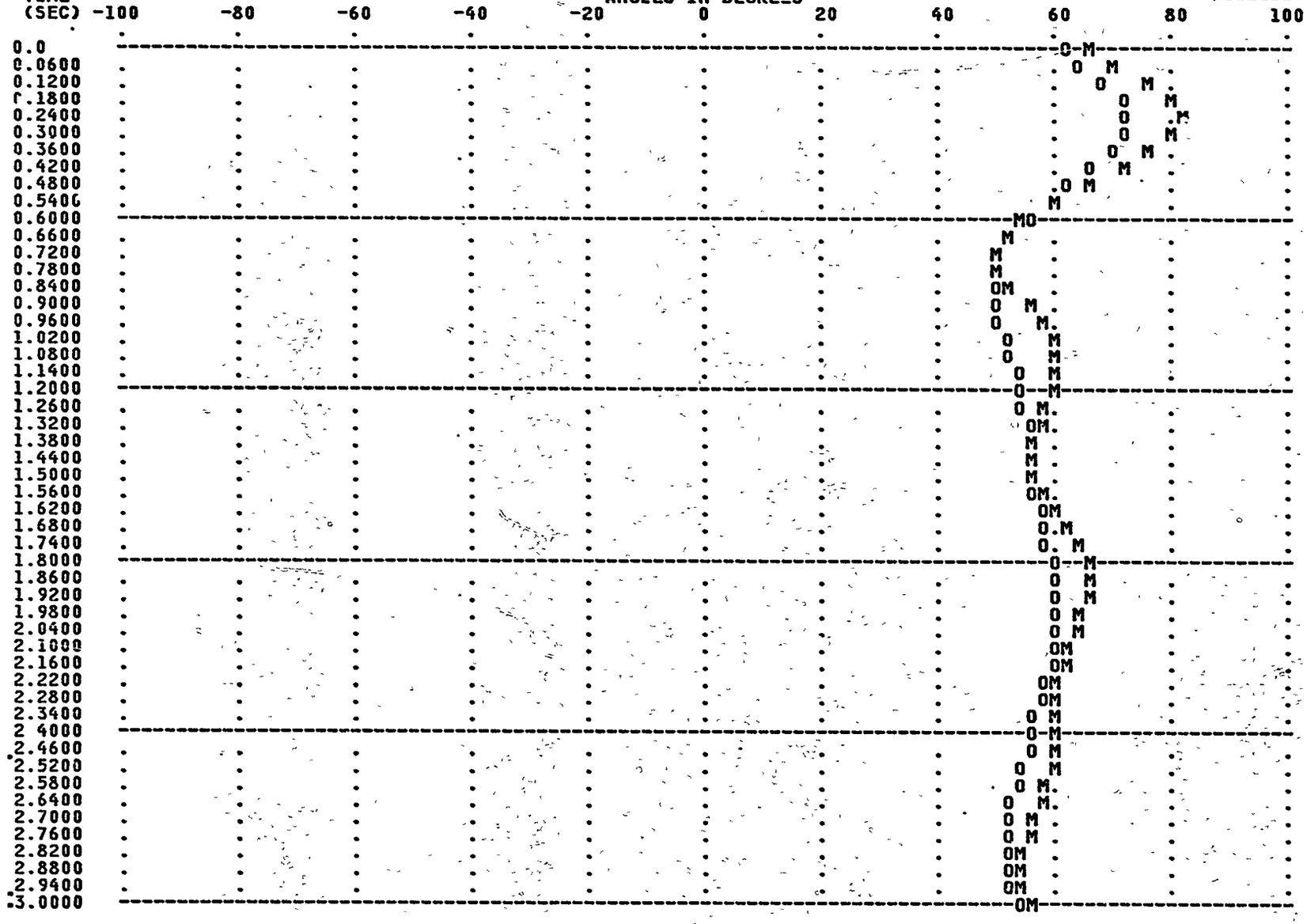

FIGURE 3-15

EGAT 1987 TRANS. STAB. STUDY BASED ON TS87RD6, FAULT AT MM-500 (MM-CS) PLOT OF GENERATOR ANGLES VS TIME

CHARACTER CODES FOR GENERATORS R = 6-BPK-21 1 S = 145- SB-211 N = 147- SNR-17 T = 152- MM13 4

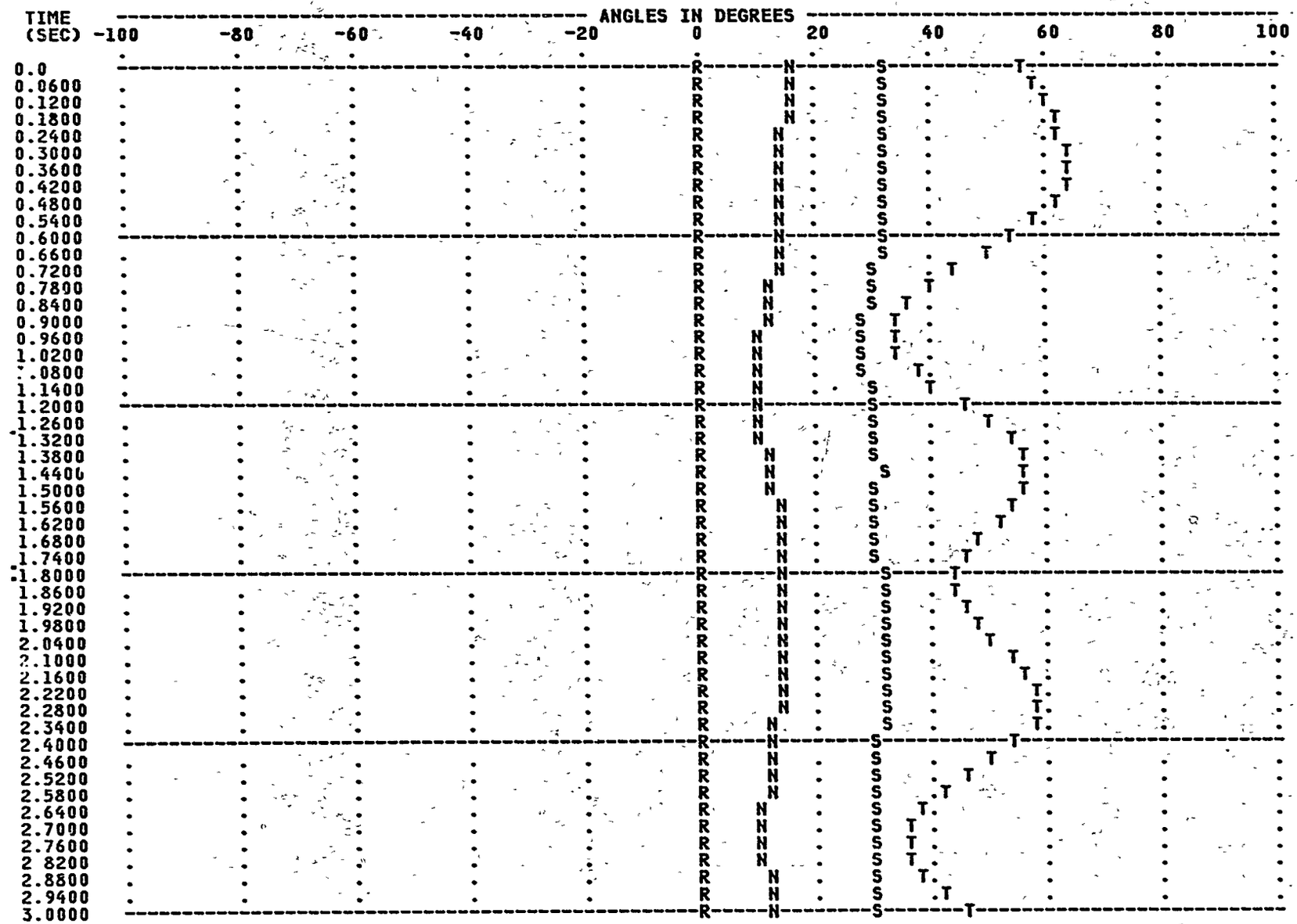

90

FIGURE 3-16

EJAT 1987 TRANS. STAB. STUDY BASED ON TS87RD6, FAULT AT CS-230 (CS-NS) PLOT OF GENERATOR ANGLES VS TIME

CHARACTER CODES FOR GENERATORS O = 153- MM17 4 M = 154- MM22 4

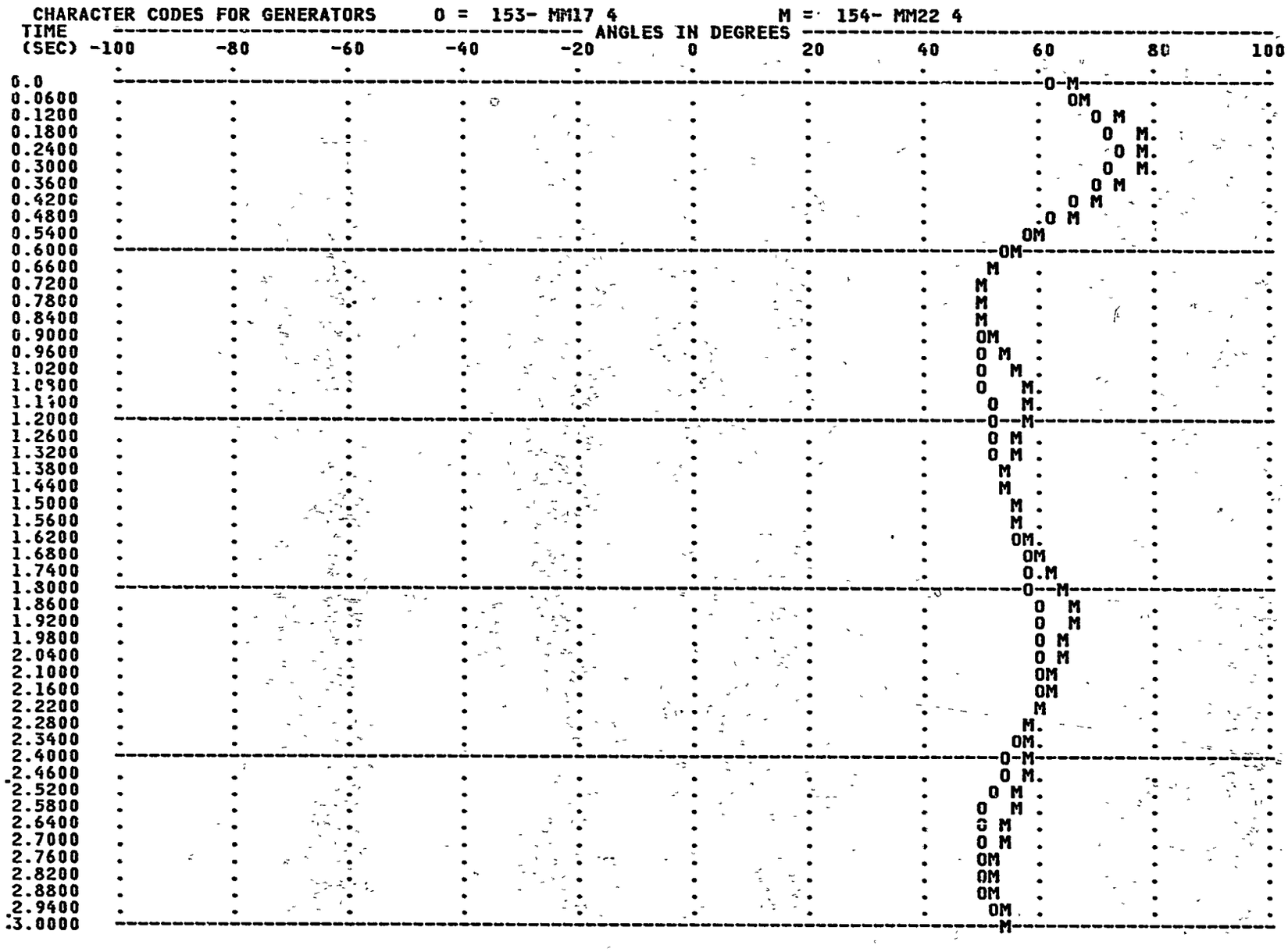

FIGURE 3-16

EGAT 1987 TRANS. STAB. STUDY BASED ON TS87RD6, FAULT AT CS-230 (CS-NS) PLOT OF GENERATOR ANGLES VS TIME

CHARACTER CODES FOR GENERATORS R = 6-BPK-21 1 S = 145- SB-211 N = 147- SNR-17 T = 152- MM13 4

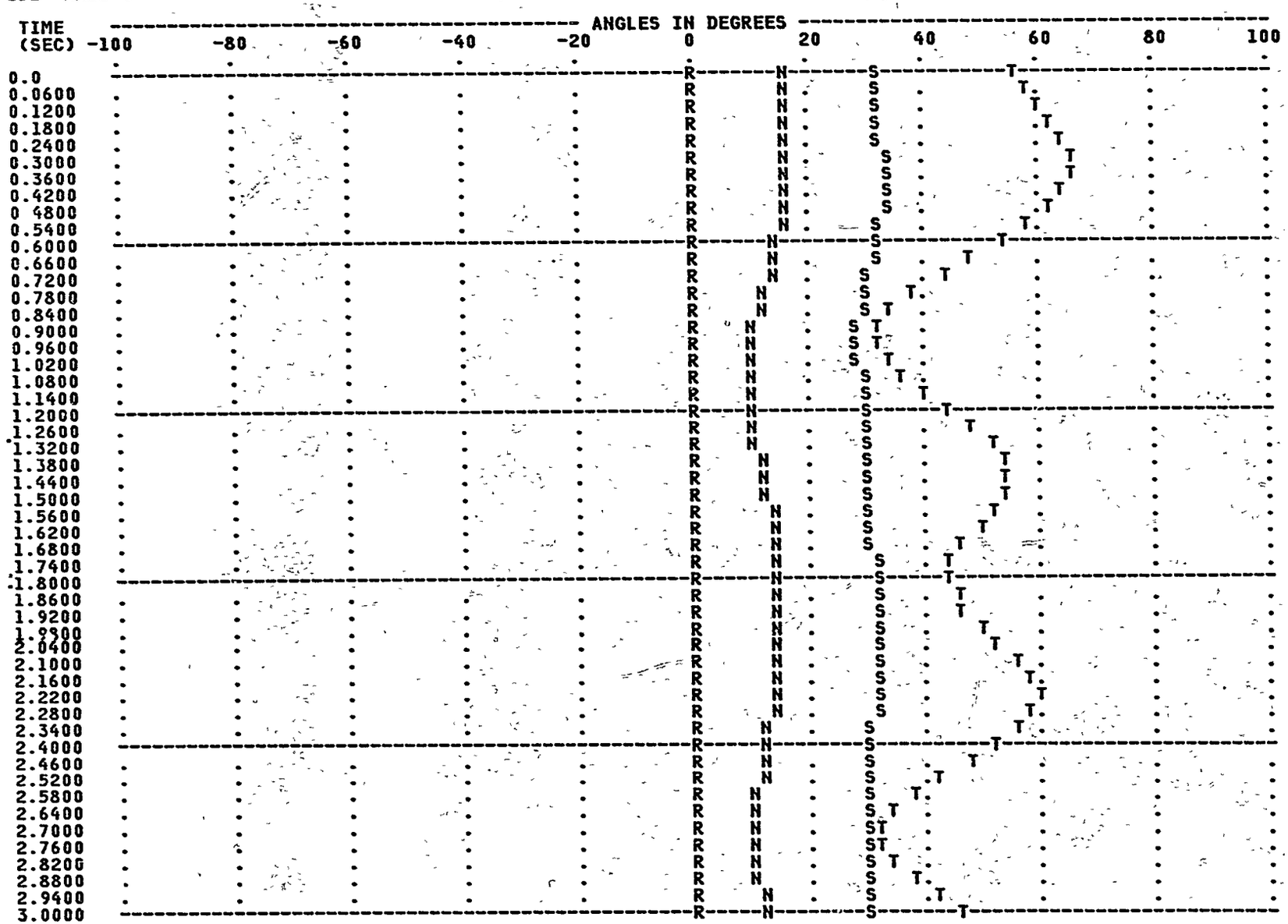

92

FIGURE 3-17

EGAT 1989 TRANS. STAB. STUDY BASED ON TS89RD3, FAULT AT MM-500 (MM-CS) PLOT OF GENERATOR ANGLES VS TIME

CHARACTER CODES FOR GENERATORS R = 6-BPK-21 1 S = 145- SB-211 N = 147- SNR-17 T = 152- MM13 4

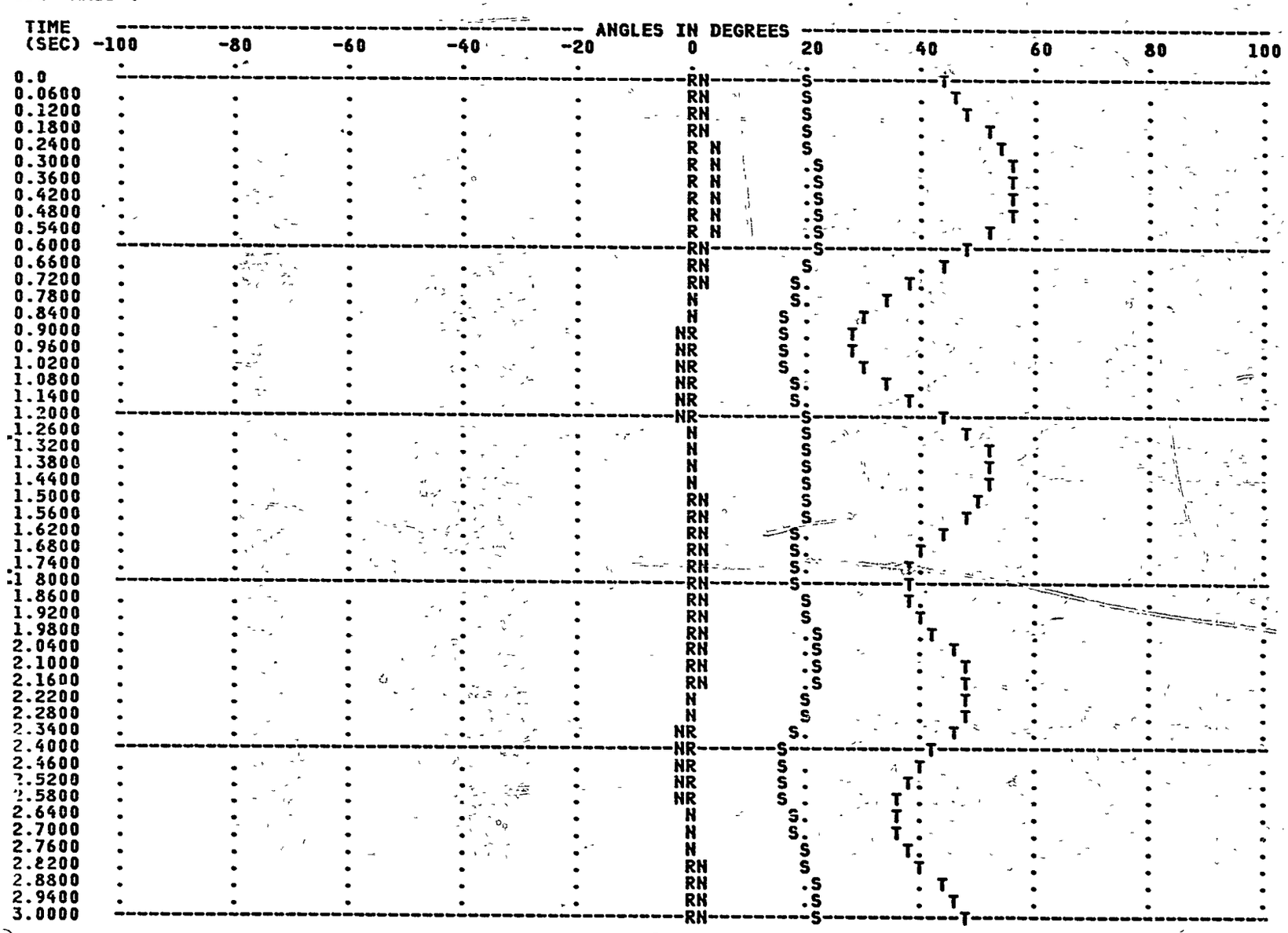

FIGURE 3-17

EGAT 1989 TRANS. STAB. STUDY BASED ON TS89RD3, FAULT AT MM-500 (MM-CS) PLOT OF GENERATOR ANGLES VS TIME

CHARACTER CODES FOR GENERATORS O = 153- MM17 4 I = 155- MM22 4 A = 157- AP

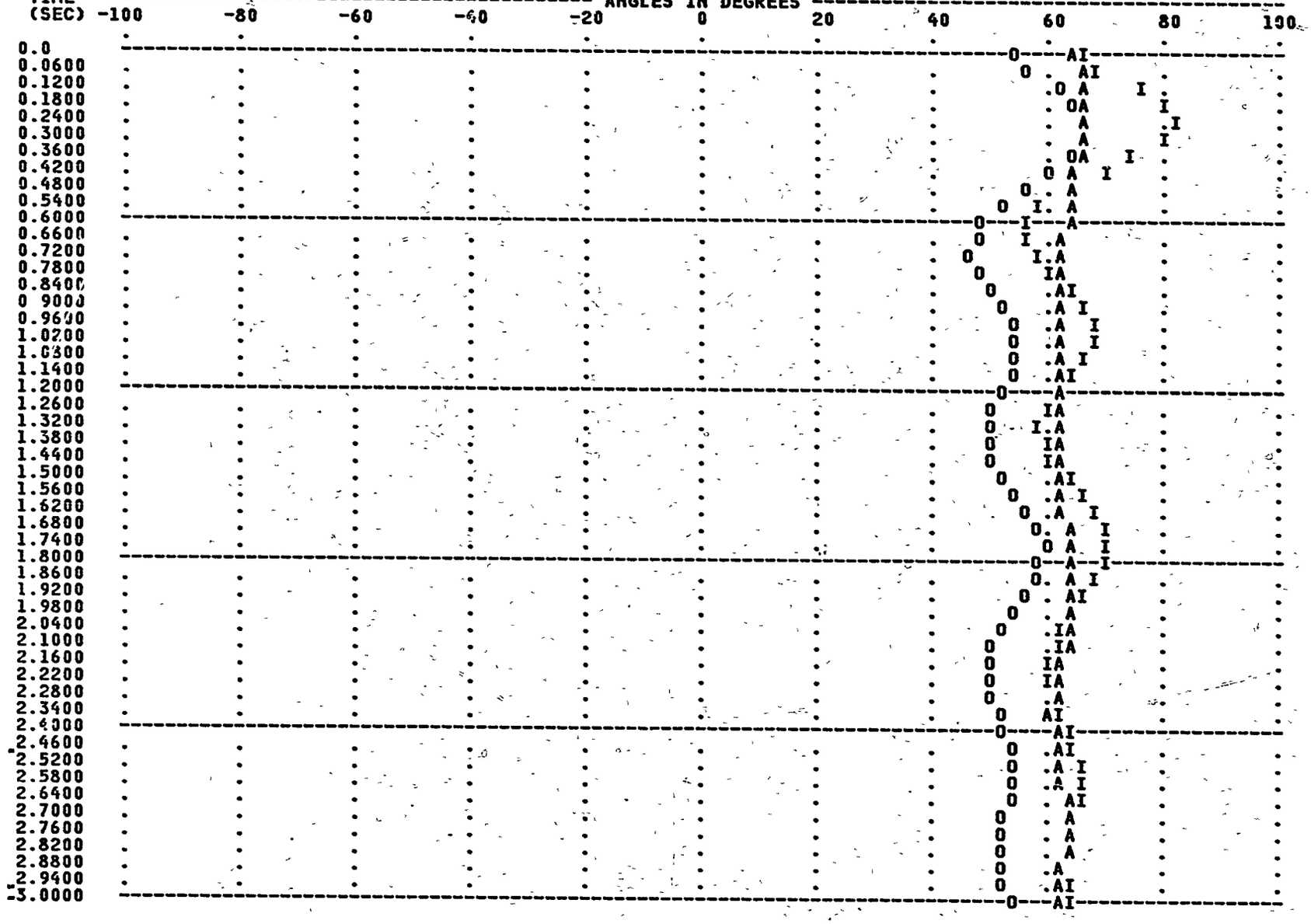

FIGURE 3-18

EGAT 1989 TRANS. STAB. STUDY BASED ON TS89RD3, FAULT AT CS-500 (CS-MB) PLOT OF GENERATOR ANGLES VS TIME

CHARACTER CODES FOR GENERATORS R = 6-BPK-21 1 S = 145- SB-211 N = 147- SNR-17 T = 152- MM13 4

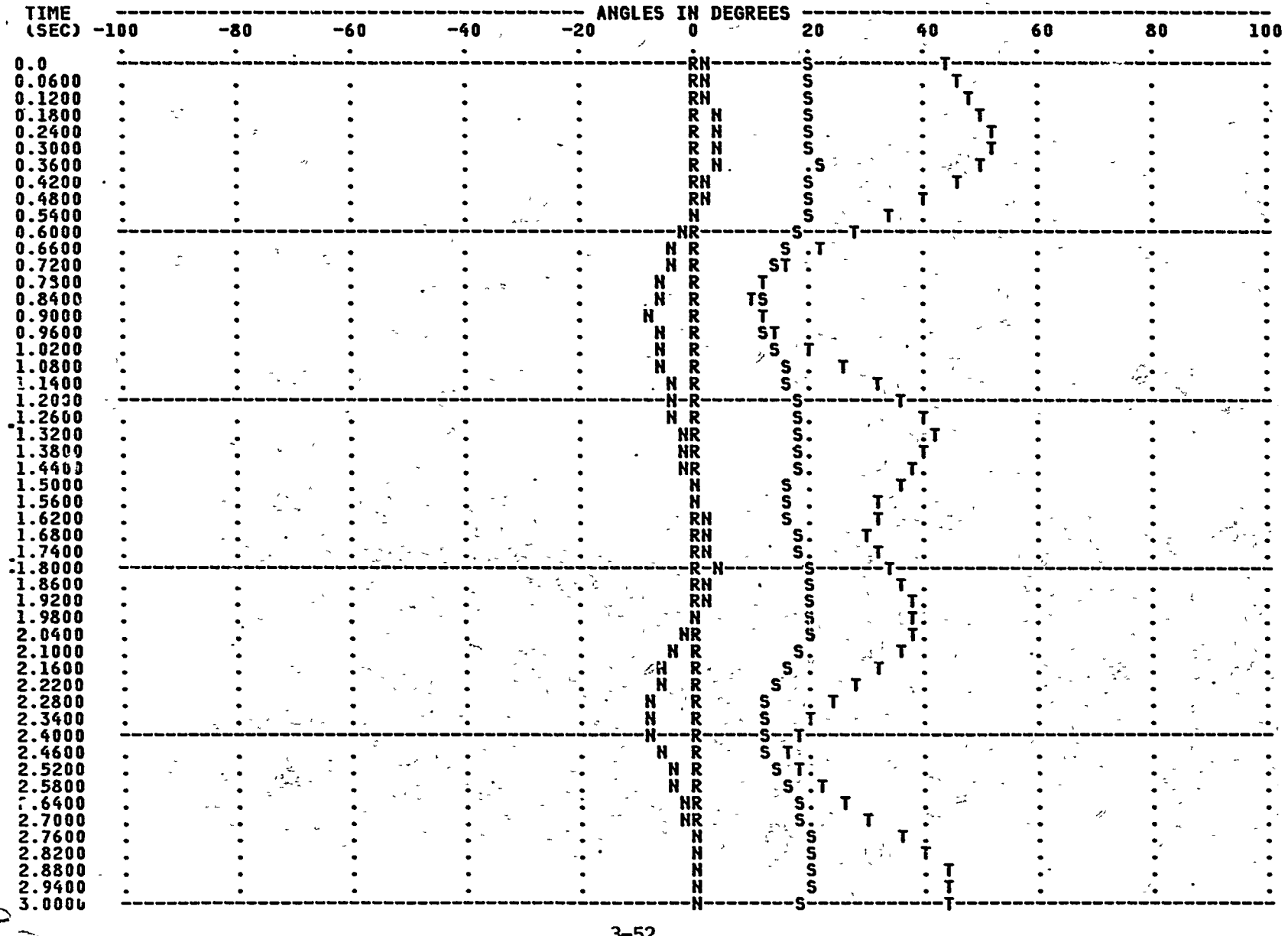

FIGURE 3-18

EGAT 1989 TRANS. STAB. STUDY BASED ON TS89RD3, FAULT AT CS-500 (CS-MB) PLOT OF GENERATOR ANGLES VS TIME

CHARACTER CODES FOR GENERATORS O = 153- MM17 4 M = 155- MM22 4 A = 157- AP

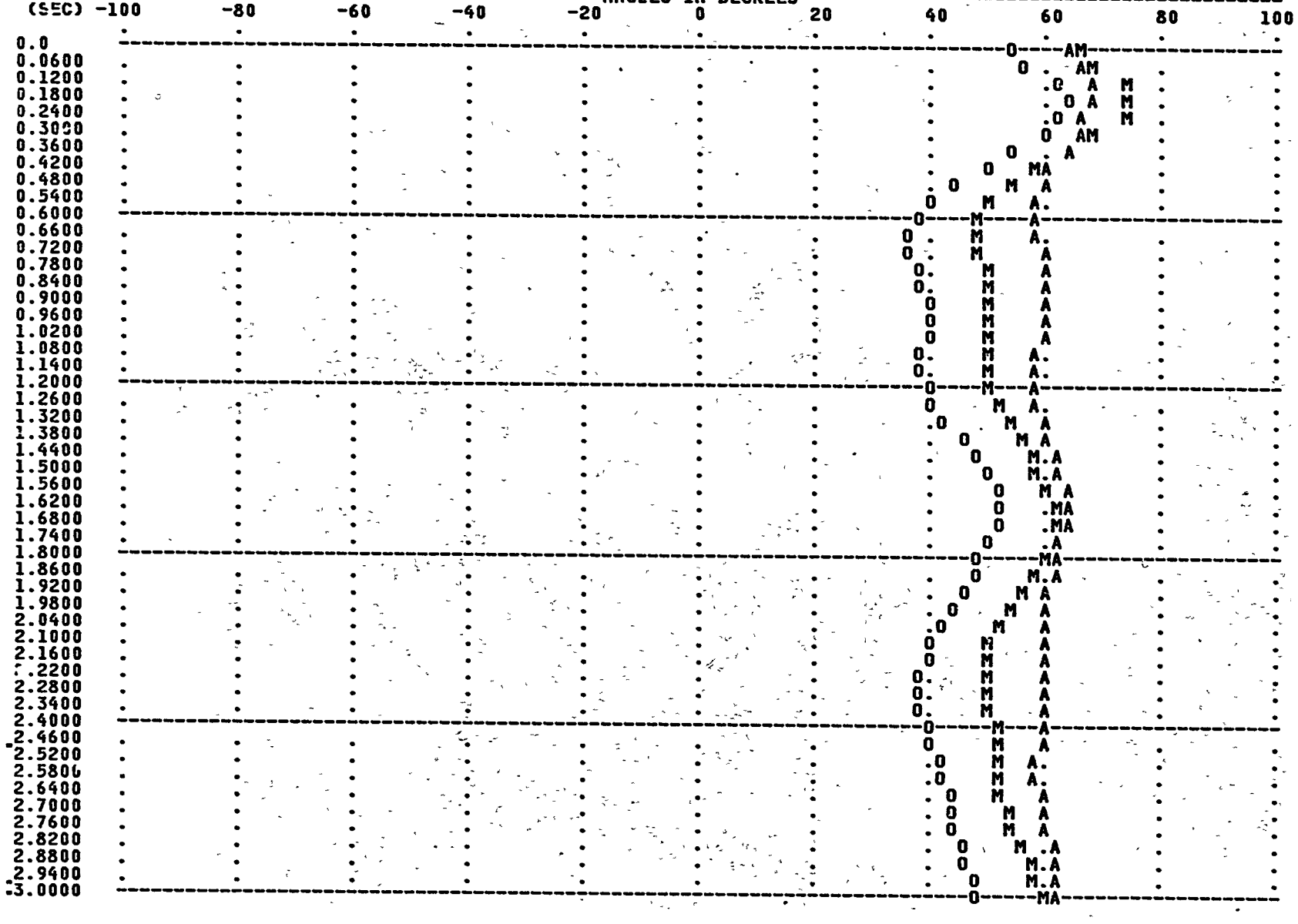

FIGURE 3-19

EGAT 1992 TRANS. STAB. STUDY BASED ON TS92RD4, FAULT AT MM-500 (MM-CS) PLOT OF GENERATOR ANGLES VS TIME

CHARACTER CODES FOR GENERATORS R = 6-BPK-21 1 S = 145- SB-211 N = 147- SNR-17 T = 152- MM13 4

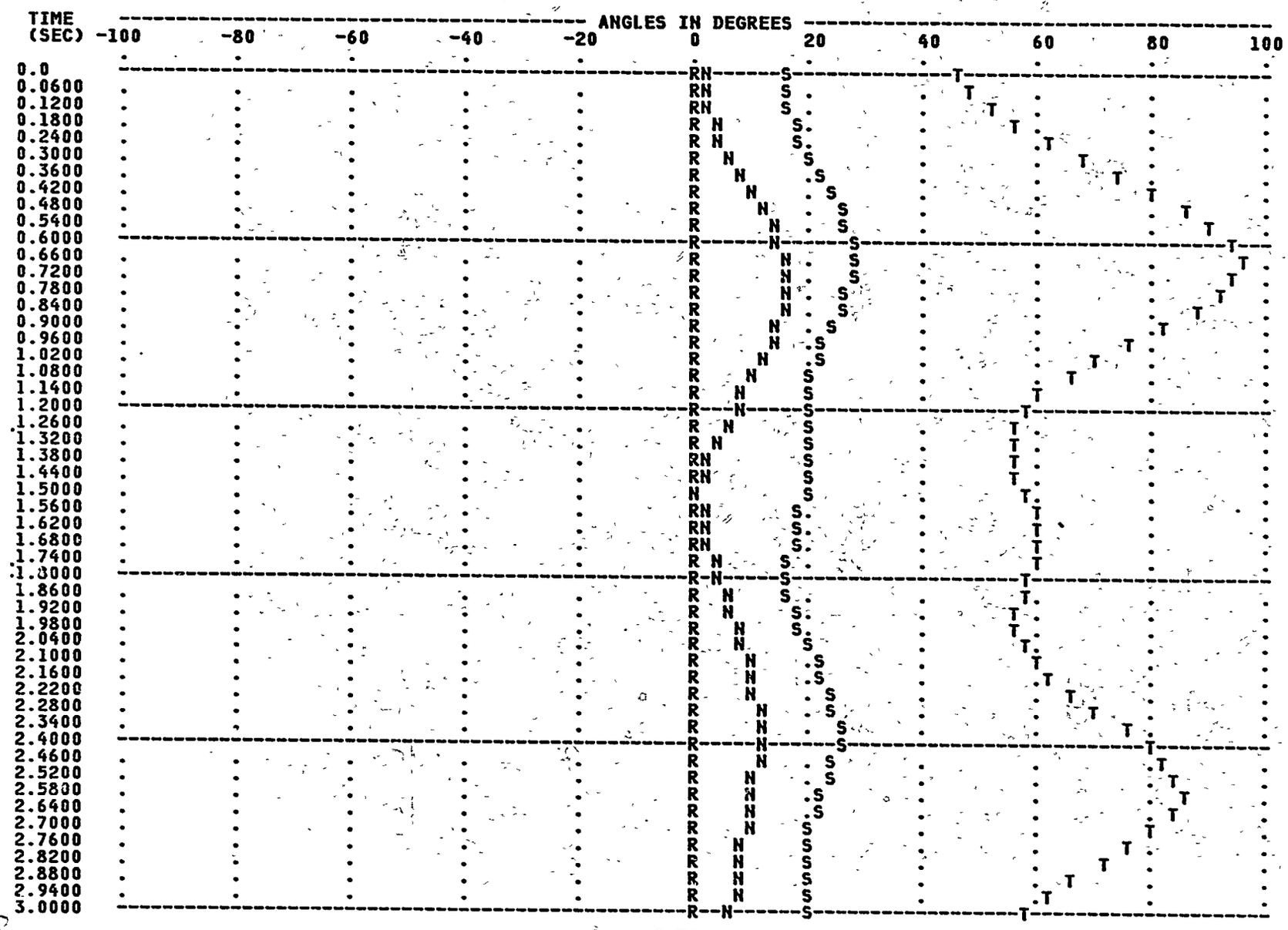

FIGURE 3-19

EGAT 1992 TRANS. STAB. STUDY BASED ON TS92RD4, FAULT AT MM-500 (MM-CS) PLOT OF GENERATOR ANGLES VS TIME

CHARACTER CODES FOR GENERATORS O = 153- MM17 4 M = 154- MM22 4 I = 156- SUA A = 157- AP

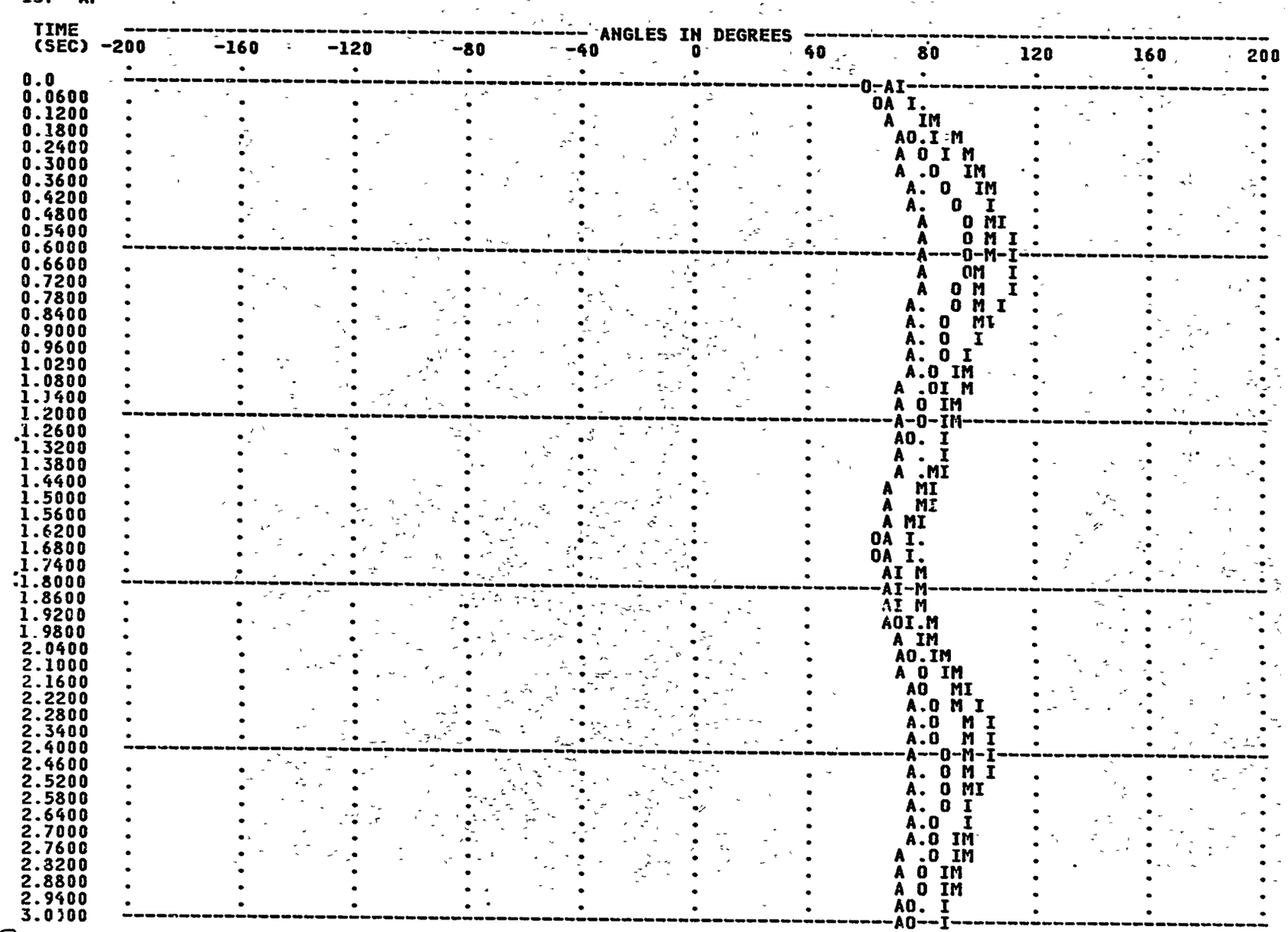

FIGURE 3-20

EGAT 1993 TRANS. STAB. STUDY BASED ON TS93RD1, FAULT AT MM-500 (MM-CS) PLOT OF GENERATOR ANGLES VS TIME

CHARACTER CODES FOR GENERATORS R = 6-BPK-21 1 S = 145- SB-211 N = 147- SNR-17 T

152- MM13 4

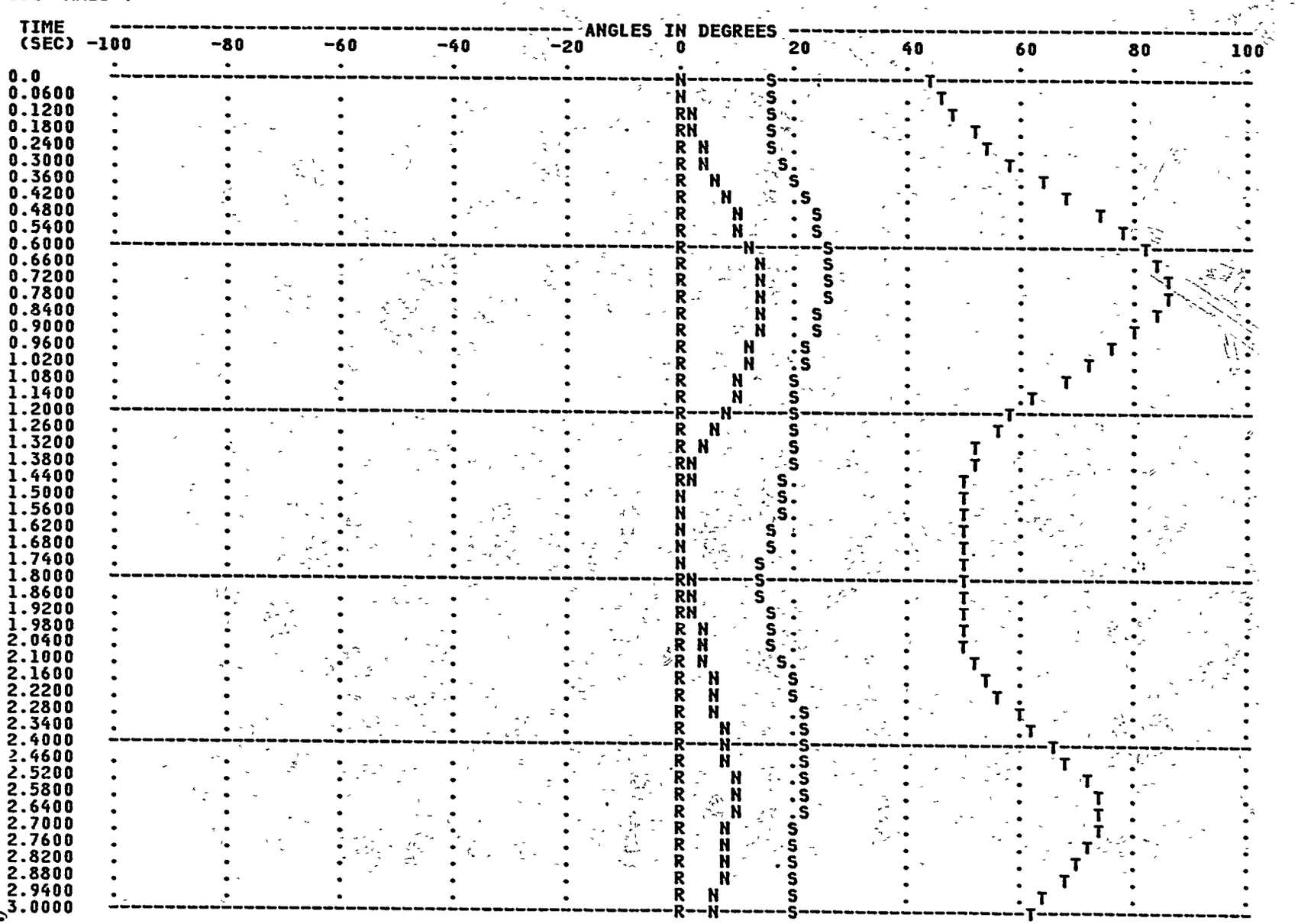

FIGURE 3-20

EGAT 1993 TRANS. STAB. STUDY BASED ON TS93RD1, FAULT AT MM-500 (MM-CS) PLOT OF GENERATOR ANGLES VS TIME

CHARACTER CODES FOR GENERATORS O = 153- MM17 4 M = 154- MM22 4 I = 156- SUA A
157- AP

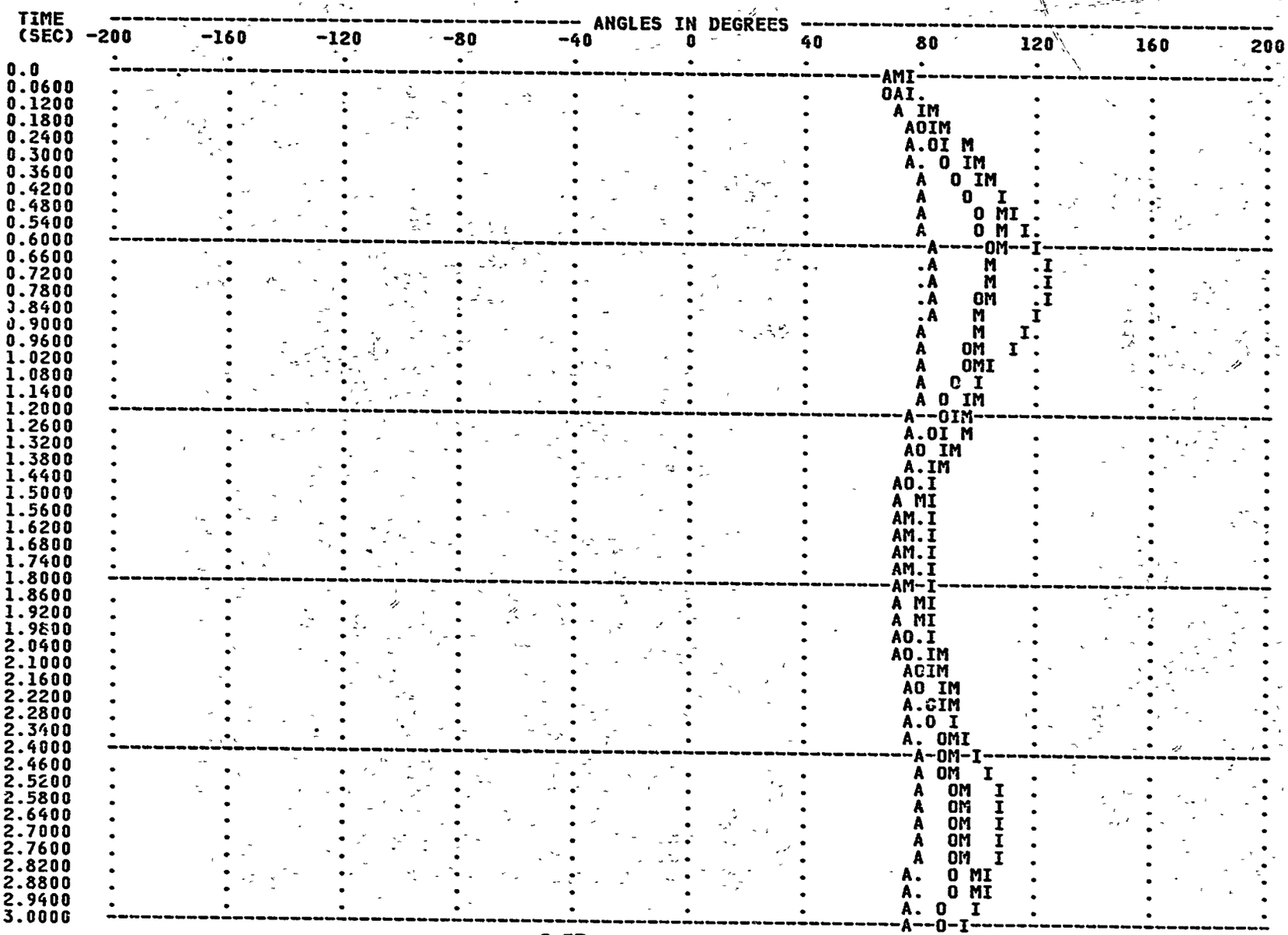

180

FIGURE 3-21

EGAT 1993 TRANS. STAB. STUDY BASED ON TS93RD1, FAULT AT CS-500 (CS-MB) . PLOT OF GENERATOR ANGLES VS TIME

CHARACTER CODES FOR GENERATORS R = 6-BPK-21 1 S = 145- SB-211 N = 147- SNR-17 T

152- MM13 4

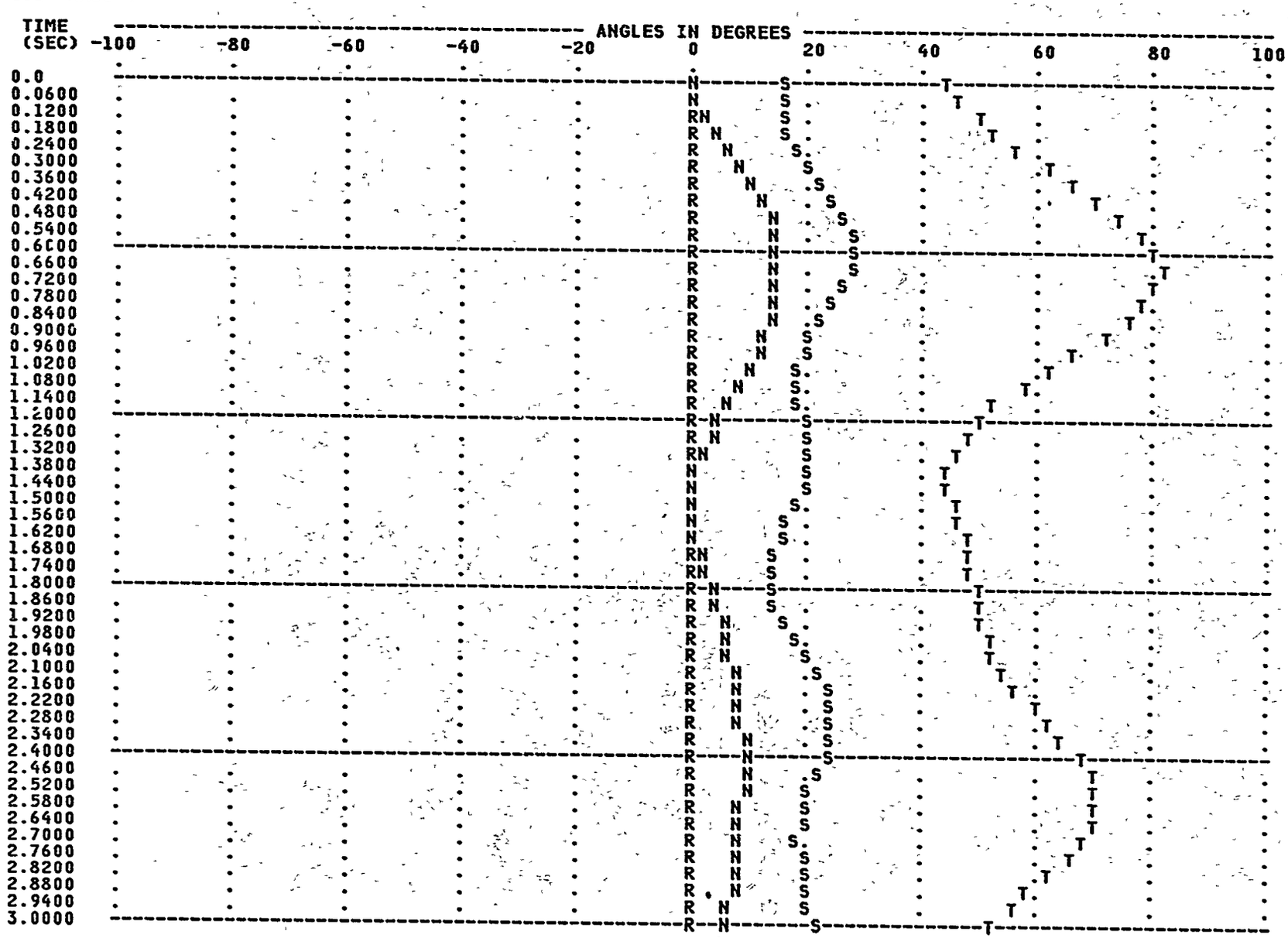

101

FIGURE 3-21

EGAT 1993 TRANS. STAB. STUDY BASED ON TS93RD1, FAULT AT CS-500 (CS-MB) PLOT OF GENERATOR ANGLES VS TIME

CHARACTER CODES FOR GENERATORS O = 153- MM17 4 M = 154- MM22 4 I = 156- SUA A

157- AP

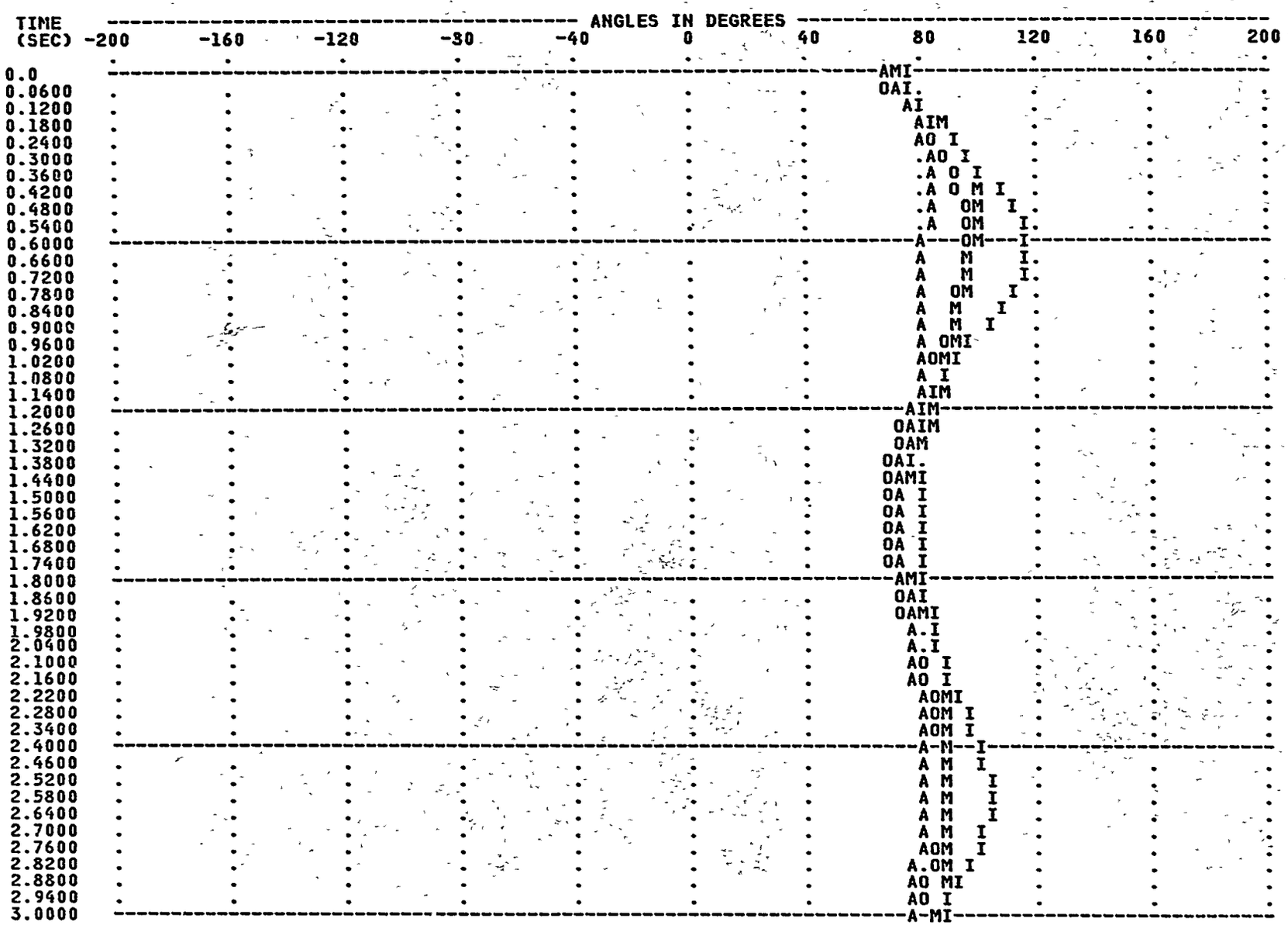

FIGURE 3-22

EGAT 1987 TRANS. STAB. STUDY BASED ON TS87RDA, FAULT AT MM-500 (MM-CS) . PLOT OF GENERATOR ANGLES VS TIME

CHARACTER CODES FOR GENERATORS R = 6-BPK-21 1 S = 145- SB-211 T = 152- MM13 4

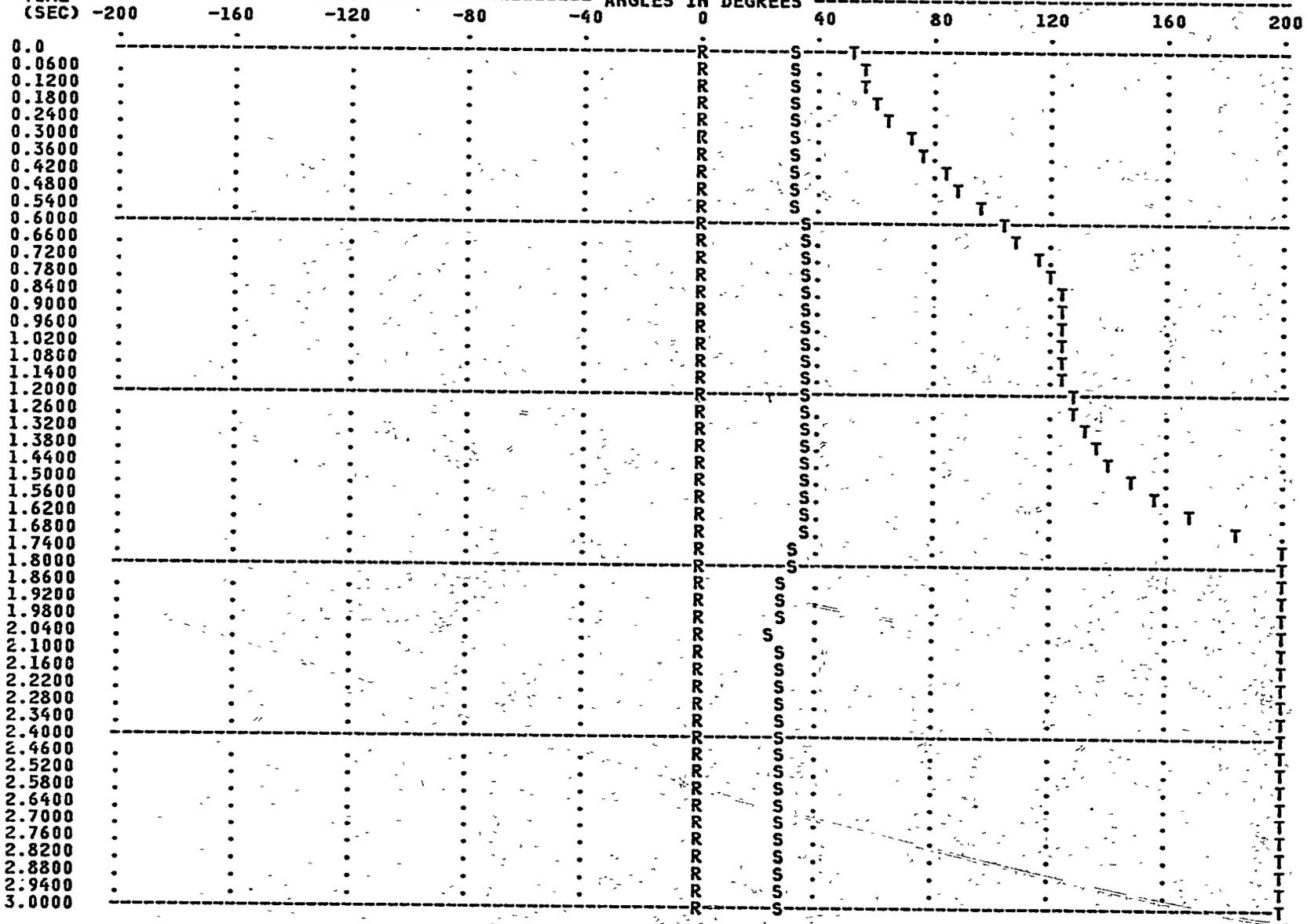

103

FIGURE 3-22

EGAT 1987 TRANS. STAB. STUDY BASED ON TS87RDA, FAULT AT MM-500 (MM-CS) PLOT OF GENERATOR ANGLES VS TIME

CHARACTER CODES FOR GENERATORS R = 6-BPK-21 1 O = 153- MM17 4 I = 154- MM22 4

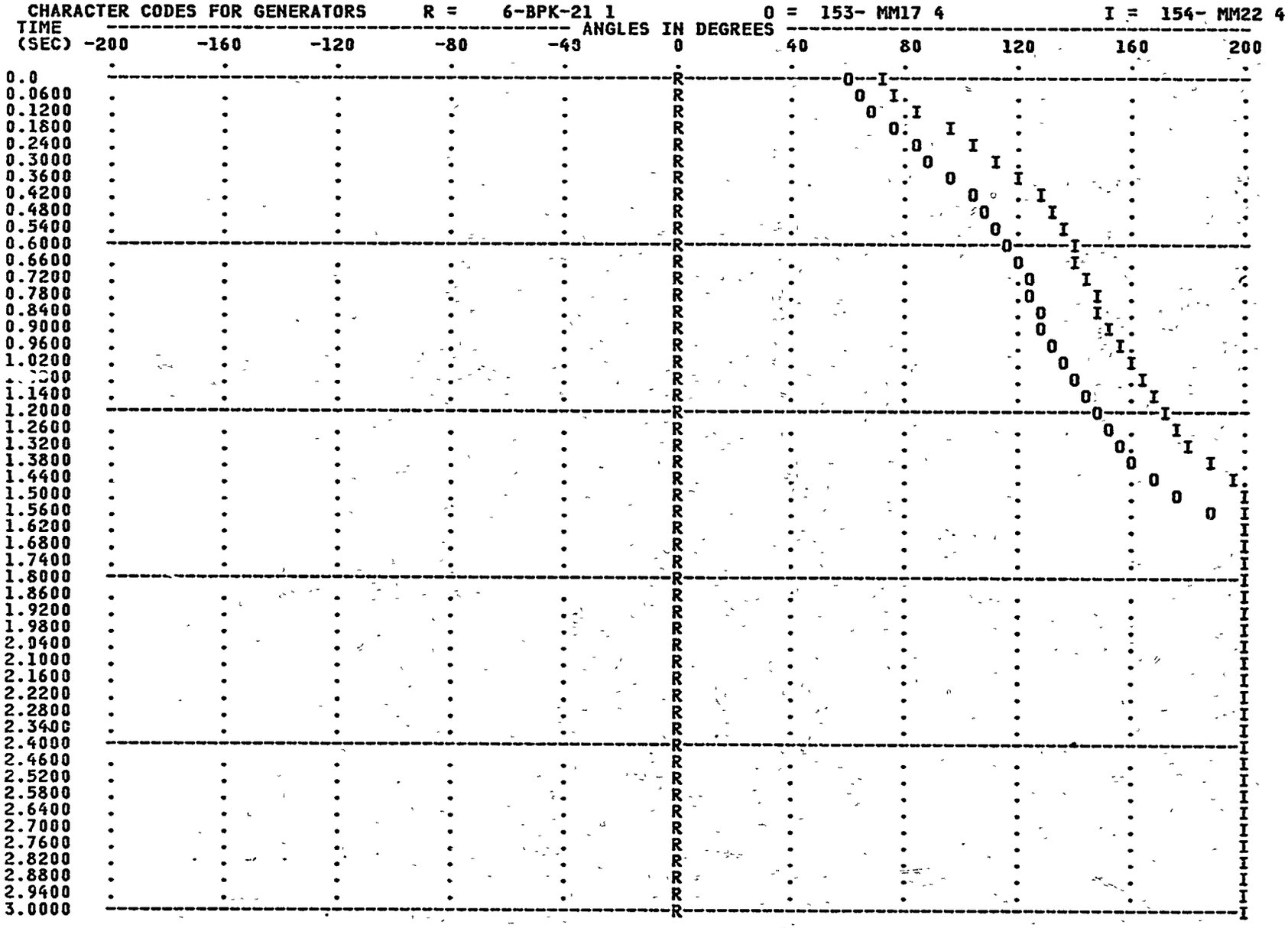

104

FIGURE 3-23

EGAT 1991 TRANS. STAB. STUDY BASED ON TS91RD6, FAULT AT MM-230 (MM-CS) PLOT OF GENERATOR ANGLES VS TIME

CHARACTER CODES FOR GENERATORS R = 6-BPK-21 1 S = 145- SB-211 N = 147- SNR-17 T = 152- MM13 4

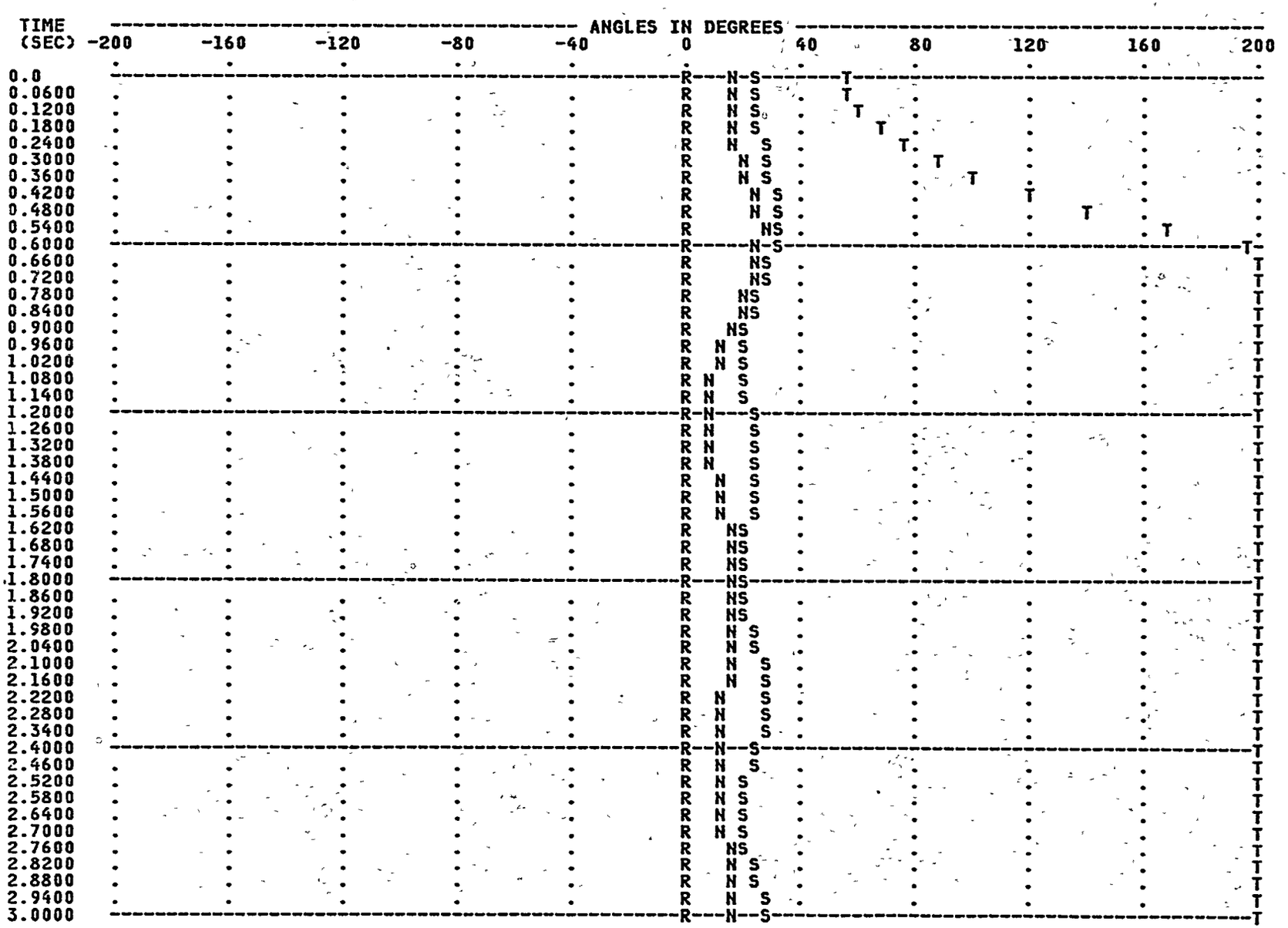

105

FIGURE 3-23

EGAT 1991 TRANS. STAB. STUDY BASED ON TS91RD6, FAULT AT MM-230 (MM-CS) PLOT OF GENERATOR ANGLES VS TIME

CHARACTER CODES FOR GENERATORS O = 153- MM17 4 M = 154- MM22 4 I = 156- SUA A = 157- AP

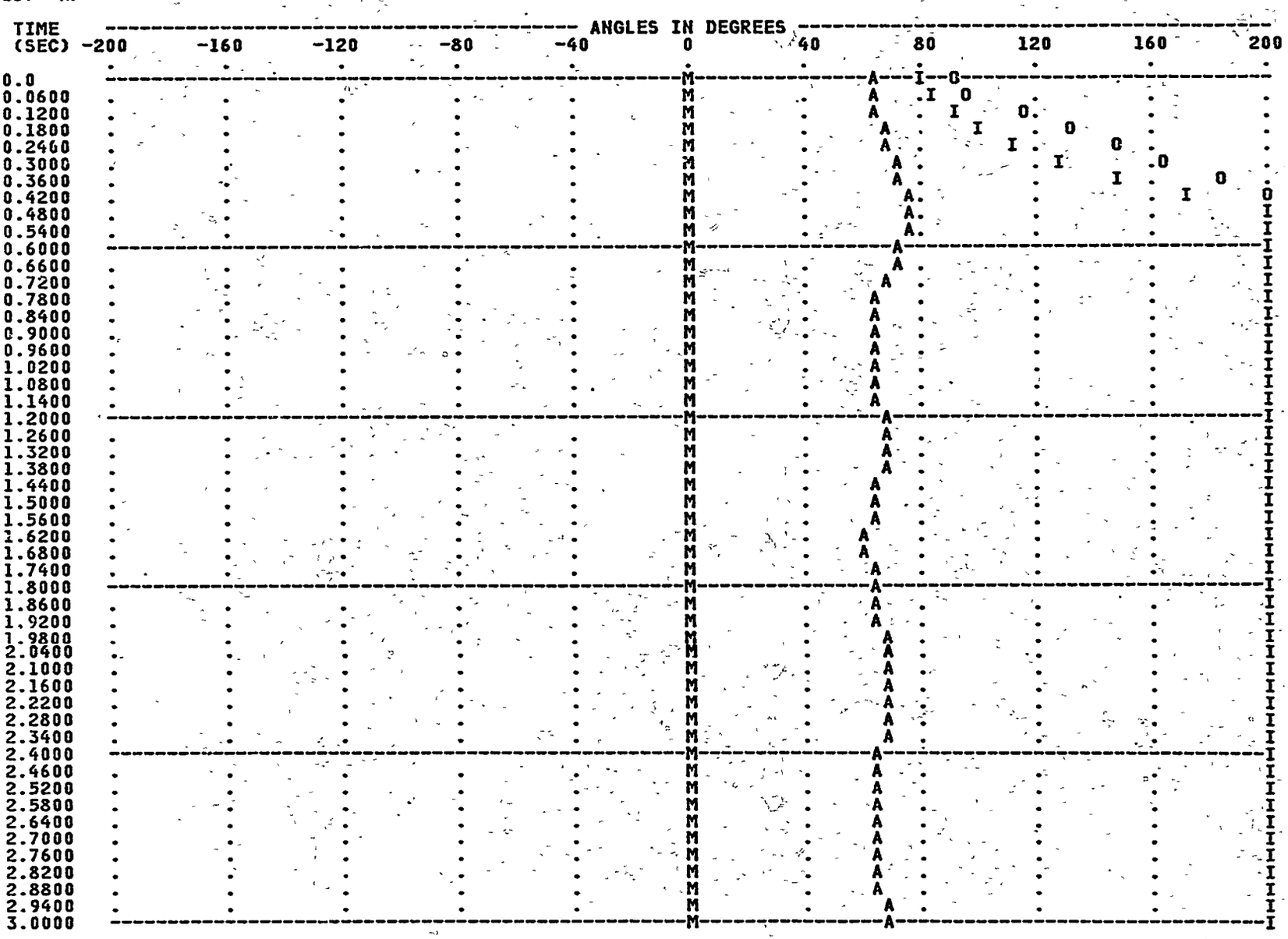

106

FIGURE 3-24

EGAT 1991 TRANS. STAB. STUDY BASED ON TS91RD6, FAULT AT CS-230 (CS-MB) . PLOT OF GENERATOR ANGLES VS TIME

CHARACTER CODES FOR GENERATORS R = 6-BPK-21 1 S = 145- SB-211 N = 147- SNR-17 T = 152- MM13 4

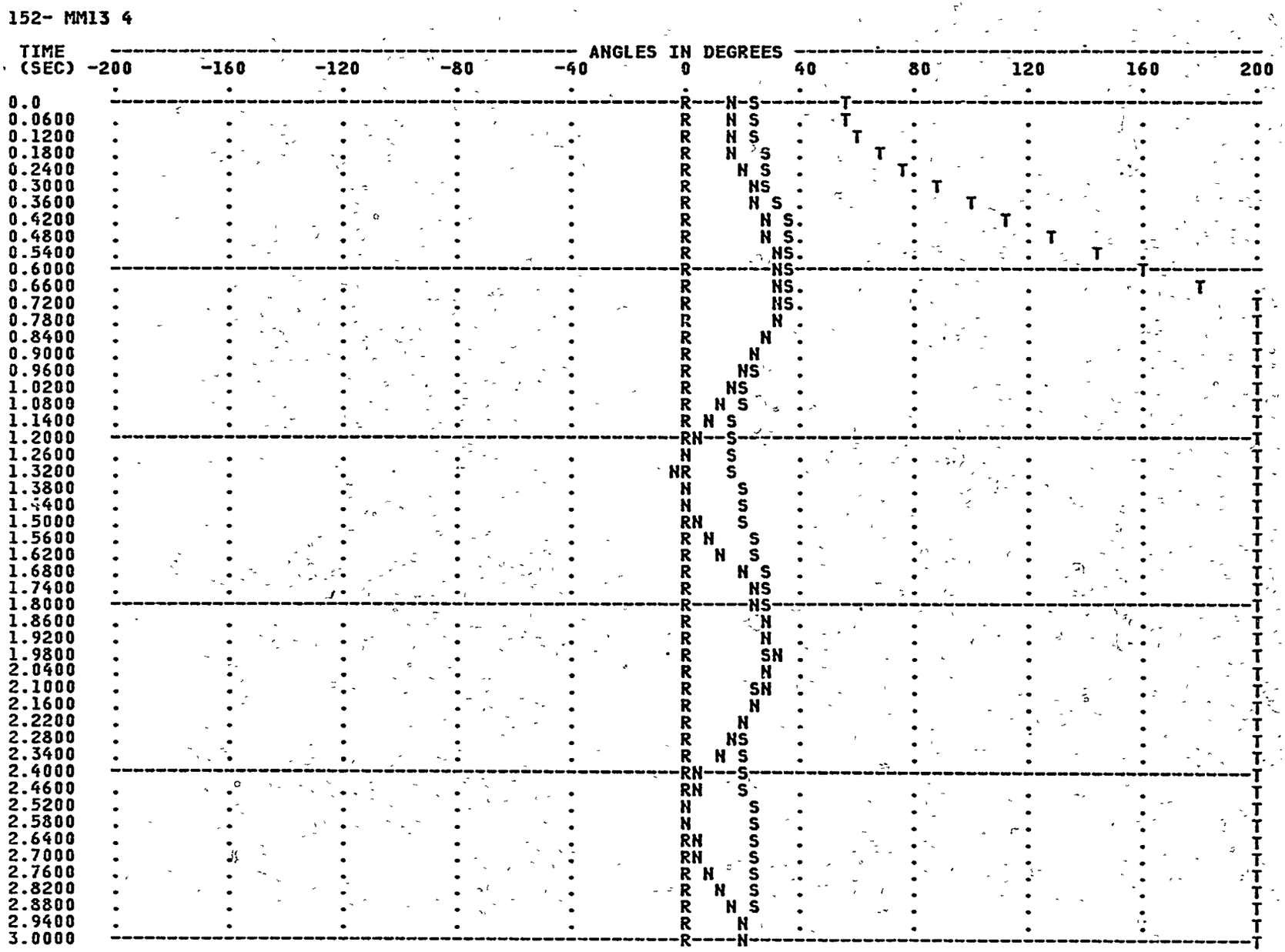

107

FIGURE 3-24

EGAT 1991 TRANS. STAB. STUDY BASED ON TS91RD6, FAULT AT CS-230 (CS-MB) PLOT OF GENERATOR ANGLES VS TIME

CHARACTER CODES FOR GENERATORS O = 153- MM17 4 M = 154- MM22 4 I = 156- SUA

157- AP

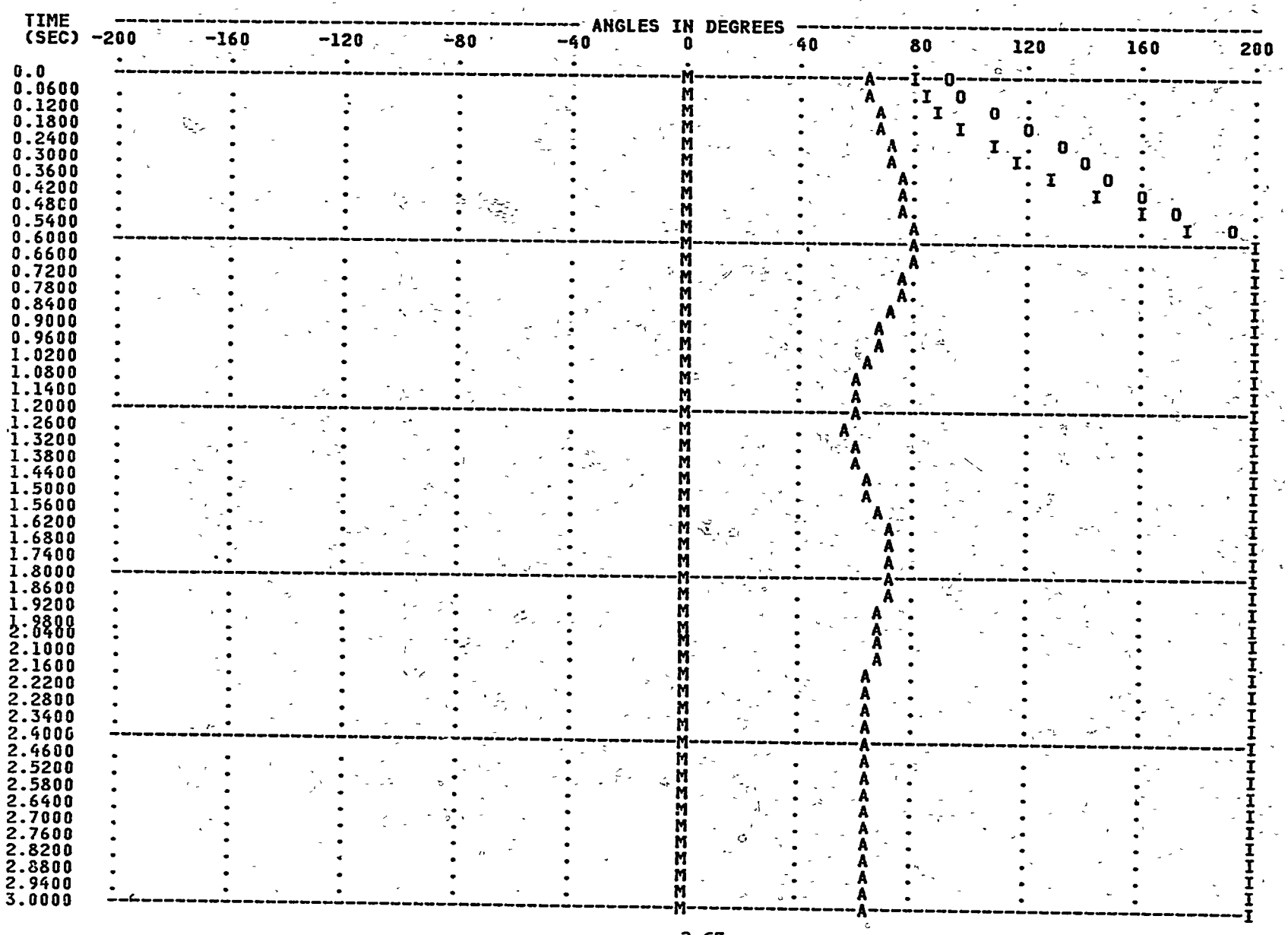

108

4.0 PRELIMINARY DESIGNS - TRANSMISSION LINES

4.1 GENERAL

Various alternative transmission line options for the Mae Moh - Bangkok EHV Transmission Project have been examined in previous studies. The option selected and presented here includes 500 kV transmission lines with 4 - 795 KCM 54/7 ACSR conductors per phase.

Because of the greater probability of outages affecting both circuits when they are on the same tower, double circuit lines have not been recommended. The preliminary design data presented here is for single circuit lines only. During the final design, however, it may become necessary to use double circuit structures in the more heavily populated areas to minimize right-of-way requirements.

4.1.1 Transmission Line Design Requirements

We have provided all preliminary designs for transmission lines based on hot-line maintenance requirements. Since the two 500 kV lines between Mae Moh and Bangkok will be the primary route through which Mae Moh power will be transmitted, we believe the ability to provide maintenance during energized in-service conditions is of prime importance to system reliability.

In their "Mae Moh - Bangkok EHV Transmission Project (Data for Feasibility Study)" (Reference 1), EGAT has directed that a keraunic level of 100-110 be utilized in these studies. We have provided a design with shielding angles which are consistent with an outage rate of less than one per hundred kilometers per year. The keraunic level is quite high by most standards, but with properly grounded structures and with the insulation level specified, we believe the required reliability will be attained.

As in previous studies, the preliminary transmission line design presented here is based on a nominal ruling span if 490 m and a corresponding right-of-way width of 71.1 m. Factors other than those considered in this study may make it necessary to further optimize these values in the final design.

The following Electrical and Mechanical Design Criteria, as shown in Table 4-1, is submitted as our recommendations for the proposed 500 kV transmission line.

TABLE 4-1

500 kV TRANSMISSION LINE REQUIREMENTS

	SINGLE CIRCUIT FIGURE 4-1
Average Tower Height, M.	46.8
Average Tower Weight, KG	20,000
Minimum R/W Width, M.	71.1
Conductor	4x795 KCM 54/7 ACSR
Bundle Dimension	18"
Shield Wire	3/8" EHS Steel
Number	2
Angle	16.1°
Design Voltage Surge	2.5 P.U.
Structure Type	S.Supt.Lat.Steel
Span Normal, M.	490
Minimum Clearance, M.	
To Ground	12.8
To Structure	4.0
Insulators	
Number of Strings/Phase	1-2
Vee or Parallel	V&P
Number of Units/String	25
Strength, K LB.	30
Size	5 3/4"x10"
Ground Resistance, Ω	<20
Hot-Line Maintenance Clearance	
Phase to Phase	10 m
Phase to Structure	4 m

110

4.2 PRELIMINARY ELECTRICAL DESIGN CRITERIA

To insure adequate performance and reliability are incorporated into the Mae Moh - Bangkok Transmission System, we suggest the following criteria be utilized in the final transmission line designs.

The transmission line design which has been offered for further consideration is based on this criteria.

4.2.1 Preliminary Design Summary

RIGHT OF WAY	Determined by conductor blowout, electric field and corona effects
CONDUCTOR	4 - 795 KCM 54/7 ACSR subconductors per phase. May be further optimized.
INSULATOR STRING	Single string of 25 ball and socket suspension insulators per phase OR Vee-string of 2 x 25 ball and socket
POWER FREQUENCY INSULATION	Leakage distance of 22 mm per kV line to ground at maximum operating voltage
SWITCHING SURGE INSULATION	Surge at 2.5 P.U. with personnel safety requirements for live-line maintenance
LIGHTNING INSULATION	Satisfied by switching surge requirements
PHASE TO STRUCTURE CLEARANCE	4.0 m minimum based on personnel clearance for live-line maintenance
PHASE SEPARATION	10 m minimum based on personnel clearance for live-line maintenance

GROUNDING	Driven grounds, counterpoise or both as required
GROUNDING RESISTANCE	20 ohms or less
LIGHTNING OUTAGE RATE	Less than one outage per 100 km of line per year
CONDUCTOR GROUND CLEARANCE	Based on 5 mA let-go current. Approximately 12.8 m depending upon structure configuration and maximum vehicle size
RADIO NOISE	Less than 40 dB:1μV/m at the edge of the right-of-way under wet conductor conditions

4.2.2 Conductor Selection

The selection of an optimum conductor bundle is based on several electrical parameters. These include conductor cost, corona, audible noise and radio noise.

4.2.2.1 Audible Noise

Audible noise emanating from transmission lines is due to conductor corona. Transmission line audible noise increases as water collects on the conductor and is greatest during heavy rain. Since the noise of a rainstorm effectively masks that of the transmission line, it is during the period of time just after a storm when the conductor is still wet that the noise will be most annoying. A level of 55 dB (A) at the edge of the right-of-way under wet conductor conditions has been selected as likely to produce few complaints.

4.2.2.2 Radio Noise

Corona-generated radio noise is predominant in the AM radio broadcast band and decreases rapidly with increasing frequency. A noise level of 40 dB:1μ V/m at the edge of the right-of-way during fair weather conditions is considered acceptable. Listeners should perceive little degradation of the quality of received signals from stations in their area at this level.

118

4.2.3 Clearances

The two most important factors which affect the required separation of phase conductors from other objects and ground are personnel safety and the security of the transmission line. Distances must be determined for clearance to ground, between phases, to the supporting structure, to other structures and to objects outside of the right-of-way.

4.2.3.1 Ground Clearance

The minimum height above ground of the transmission line phase conductors is determined by the 5 mA let-go criteria. A minimum ground clearance of approximately 12.8 meters has been used for the preliminary design, although tower configurations and other parameters vary this requirement.

4.2.3.2 Phase Separation

The separation between phase conductors is based on the assumption that live-line maintenance methods will be utilized and allowance is given for the maximum switching surge over-voltages likely to occur anywhere on the transmission line. The minimum separation used in the preliminary configuration was 10 m.

4.2.3.3 Phase Clearance to Structure

The minimum clearance from a phase conductor to the supporting structure is also determined by live-line maintenance and switching surge considerations. The assumption is made that a lineman would climb the tower inside the tower body and that he would stand on the bottom members of the tower arms. Allowances are made for his reach outside of the tower body and his height above the arm member. The minimum clearance used in the preliminary design was 4.0 m.

4.2.3.4 Right-of-Way Width

The required right-of-way width is determined primarily by conductor blow-out considerations, but attention is also given to electric field and corona effects. The amount of blow-out depends in part on the type of insulator strings (vee or suspension) and the span

length. The electrical considerations that enter into the determination of a right-of-way width are the same as those determining the selection of an optimum conductor bundle.

4.2.3.5 Clearances to Other Structures

Clearances required between the transmission line and other structures depend on the type of structure (power lines, communication lines, pipe lines, buildings, etc.) and on the amount of conductor blow-out. At EHV levels, there are also electrical considerations which include precautions such as grounding nearby fences, metal roofs and gutters which must be taken to assure the safety of persons near the transmission line.

4.2.4 Lightning Performance

The lightning performance of EHV transmission lines is governed by the average number of thunderstorm days per year (keraunic level), the structure footing resistance, the structure height and configuration, and the line insulation level. For a given keraunic level, the other parameters are varied somewhat during the design stage to give assurance that the final design will result in an acceptable probability of outage.

4.2.4.1 Shielding Angle

The shielding angle is chosen such that virtually all lightning strokes to the transmission line will contact the shield wire and not the phase conductor. As the structures increase in height, the required shielding angle becomes smaller. Preliminary calculations indicate that essentially perfect shielding can be obtained for the average height structure of the configuration under consideration.

4.2.4.2 Insulation Level

The insulation level of EHV transmission lines is usually controlled by the amplitude of switching surges. Where the keraunic level is high however, lightning surges may be a controlling factor.

A keraunic level of 100 was used in the preliminary calculations. This number is high, but the level of switching surges used was also high. Calculations show that the insulation, both porcelain and air gap, chosen on the basis of switching surges is also reasonable for adequate lightning performance.

4.2.4.3 Structure Grounding

Preliminary calculations were based on the assumption that a structure footing resistance of 20 ohms could be attained by reasonable means. This assumption anticipated the use of driven ground rods, counterpoise or both.

The number of ground rods or length of counterpoise required will vary from structure to structure depending upon the soil resistivity encountered at the individual tower site. A good ground is essential for adequate lightning performance.

4.2.4.4 Outage Rates

The outage rate, due to lightning, of transmission lines is usually expressed as the number of outages expected to occur on a 100 kilometer length of line in one year. Good design practice dictates that this number should be kept as low as reasonably possible.

Preliminary calculations indicate that the structure design under consideration should give a probable outage rate of less than one per hundred kilometers per year.

4.3 500 kV TRANSMISSION LINE PRELIMINARY MECHANICAL DESIGN CRITERIA

4.3.1 General

This set of design criteria is written to cover all aspects of structure and foundation design for a family of lattice steel structures recommended to be used to support 500 kV lines extending from Mae Moh to Min Buri.

4.3.2 Lattice Steel Towers

The family of structures will include:

- 0° Tangent Structure
- 0° to 5° Small Angle Structure
- 5° to 15° Light Angle Structure
- 15° to 30° Medium Angle Structure
- 30° to 90° Heavy Angle Structure, and
- 0° to 15° In-Line Deadend Structure

The towers should be designed with a basic body, a 6-meter and 12-meter body extension and leg extensions ranging from 1.5 meters to 7.5 meters in 1.5 meter increments.

The structures shall be designed to support two shield wires of 3/8" EHS, 7-strand, galvanized steel and one or two 500 kV circuits of bundled (4 per phase), 795 KCM ACSR, 54/7 strand, code name "CONDOR" conductor.

Towers will be designed by the Engineer; shop details and erection drawings will be supplied by the Tower Fabricator. Tower design should conform to the American Society of Civil Engineers' "Guide for Design of Steel Transmission Towers".

4.3.3 Cable Data and Design Spans

The cable data given in Table 4-3 shall be used in the development of structure loadings as outlined in Paragraph 4.3.4.

TABLE 4-2

CABLE DATA	SHIELD WIRE	CONDUCTOR
Cables per location	1	4
Size	3/8" EHS Steel	795 KCM ACSR 54/7
Code Name	N/A	CONDOR
Ultimate Strength	15,400 LBS	28,200 LBS
Diameter	0.360"	1.093"
Weight	0.273 LBS/FT	1.024 LBS/FT

116

HORIZONTAL WIND ON CABLES	SHIELD WIRE	CONDUCTOR
10.75 PSF	0.323 LBS/FT	0.979 LBS/FT
16.63 PSF	0.499 LBS/FT	1.515 LBS/FT

CABLE TENSIONS	SHIELD WIRE	CONDUCTOR
0 PSF, 30°F, Initial	2,647 LBS	8,445 LBS
10.75 PSF, 60°F, Initial	3,394 LBS	9,720 LBS
16.63 PSF, 60°F, Initial	4,135 LBS	11,402 LBS

DESIGN SPANS	SHIELD WIRE	CONDUCTOR
Ruling Span	1,600 FT (488M)	1,600 FT (488M)
Wind (Horizontal) Span	1,600 FT (488M)	1,600 FT (488M)
Weight (Vertical) Span	2,000 FT (610M)	2,000 FT (610M)

4.3.4 Structure Loading Criteria

EGAT

All cables intact
Transverse wind of 10.75 PSF on cables
37.28 PSF wind on lattice towers applied to the projected area of one face
60 ° F, initial tensions

OVERLOAD FACTORS: 2.00 All Loads

EXTREME WIND

All cables intact
Transverse wind of 16.63 PSF on cables
89.95 PSF wind on lattice towers applied to the projected area of one face,
60°F, initial tensions

OVERLOAD FACTORS: 1.00 All Loads

117

LONGITUDINAL WIND	All cables intact No transverse wind on cables 89.95 PSF wind on lattice tower in longitudinal direction applied to the projected area of one face 60°F, initial, no wind tensions OVERLOAD FACTORS: 1.00 All Loads
BROKEN WIRE	All cables intact Transverse wind of 10.75 PSF wind on lattice tower applied to the projected area of one face 60°F, initial tension, with a longitudinal unbalanced load (normal to crossarm) at any one shield wire location equal to the shield wire tension or any one phase location equal to the tension of one phase (4 conductors) OVERLOAD FACTORS: 1.50 All Loads
TERMINAL LOADING	Any or all of the above loadings, including overload factors, with all cables attached in one span and no cables attached in the other span
NOTE:	All towers should be capable of supporting one circuit with one shield and two circuits under all loading cases.

4.3.5 Tower Foundations

Tower foundations should be divided into two categories depending on the soil classification. Spread footings shall be utilized in the "good" soil locations and pile footings shall be utilized in the "poor" soil locations. A safety factor of 3.0 should be used for all foundation designs.

Spread footings may be constructed of either steel or concrete. These footings will be primarily designed to resist uplift and compressive forces. The uplift force shall be resisted by the weight of soil as defined by the frustrum of an inverted pyramid with sides sloping at 20 degrees.

UR = V x s
UR = Uplift Resistance
V = Volume of Pyramid Frustrum
s = Unit Weight of Soil

The compressive force shall be resisted by the bearing capacity of the soil. Settlement shall be limited to a maximum of one inch. Ultimate bearing capacity shall be determined using the following formula:

$$qds = 1.2cNc + DfNq + .4\gamma BN$$

WHERE

c = Cohesive Strength
γ = Unit Weight of Soil
Df = Depth to Bottom of Footing
B = Width of Bearing Area
Nc = Functions of Angle of Internal Friction
Nq = Functions of Angle of Internal Friction
$N\gamma$ = Functions of Angle of Internal Friction

REFERENCE: "Soil Mechanics in Engineering Practice"
by Terzaghi & Peck, Second Edition 1967
John Wiley & Sons Inc. (Reference 12)

Prestressed concrete pile footings shall be used in "poor" soil locations. The number of piles will vary depending on the loading and the soil conditions. The footing for each tower leg will be composed of a pile group tied together with a reinforced concrete pile cap. The ultimate bearing capacity of the piles shall be determined using the Danish Pile Formula:

$$Qd = W_H H/(S \ 1/2 \ Se)$$

WHERE

Qd = Bearing Capacity

W_H = Weight of Hammer

H = Height of Fall

S = Penetration

Se = Elastic Compression

$$Se = \left(\frac{2 W_H HL}{AE}\right)^{\frac{1}{2}}$$

L = Pile Length

A = Cross-Sectional Area of Pile

E = Modulus of Elasticity of Pile

REFERENCE: "Soil Mechanics in Engineering Practice" by Terzaghi & Peck, Second Edition 1967, John Wiley & Sons Inc. (Reference 12)

Piles designed to be used in groups shall have a minimum spacing 2.5xD. The ultimate bearing capacity of the pile group shall be determined using the following formula:

$$Q_g = q_d BL + D_f (2B + 2L)S$$

WHERE:

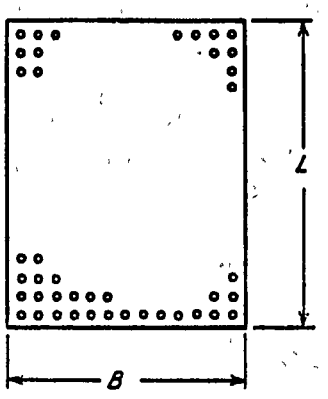

B = Width of Pile Group

L = Length of Pile Group

S = Average Shearing Resistance of Soil, Per Unit of Area, Between Ground Surface and Depth, D_f

q_d = Ultimate Bearing Capacity, Per Unit of Area, of a Rectangular Loaded Area with Dimensions B x L and Depth D_f

Piles shall not exceed allowable loading as individuals and/or as groups.

The uplift resistance of the piles shall be taken as one-half of the compressive resistance.

Concrete foundations shall be designed in accordance with the latest revision of the American Concrete Institute's Standard 318 - Building Code Requirements for Reinforced Concrete.

121

4.3.6 Soil Parameters

Ultimate values of soil resistance (not working values) will be used in the foundation design.

It will be considered that the top two feet of soil offers no horizontal support, but may be used as effective overburden on the lower layers.

For solid bedrock a value of $\emptyset = 0$ and $c = 5.0$ ksf will be used to obtain an initial design depth.

For fractured or layered rock, a value of $\emptyset$ established by the soil investigation will be used. If a value of $\emptyset$ is not obtainable from the soils investigation, $\emptyset$ will be developed from Table 4-4.

4.3.6.1 Soil Properties

Independent of the theory used to compute earth pressure on retaining structures, the results can be no more accurate than the soil properties used in the calculations. Because of the wide variations of subsurface conditions at various sites, the soil constants should be determined on the basis of an exploratory boring program and laboratory tests of representative samples. Only then can a safe and economical design be assured. However, for the purpose of preliminary design, it is often necessary to presume appropriate soil properties. The following tables and graphs are included for this purpose merely as a guide.

Table 4-4 shows an approximate relationship between the relative density, standard penetration resistance, angle of internal friction, and unit weight of granular soils (after Teng - Reference 13).

TABLE 4-3

GRANULAR SOIL

COMPACTNESS	VERY LOOSE	LOOSE	MEDIUM	DENSE	VERY DENSE	
Relative Density D_d	0	15%	35%	65%	85%	100%
Standard Penetration Resistance, N=number of blows per foot.	0	4	10	30	50	
Ø (Degrees)*		28	30	36	41	
Unit Weight, pcf						
Moist	<100	95-125	110-130	110-140	>130	
Submerged	<60	55-65	60-70	65-85	> 75	

*Highly dependent on gradation

Table 4-5 shows an approximate relationship between the unconfined compressive strength, standard penetration resistance and the unit weight of cohesive soils (after Teng - Reference 13).

TABLE 4-4

COHESIVE SOIL

CONSISTENCY	VERY SOFT	SOFT	MEDIUM	STIFF	VERY STIFF	HARD
q_u = unconfined compression strength, tons per square foot	0	0.25	0.50	1.00	2.00	4.00
Standard penetration resistance, N=number of blows per foot	0	2	4	8	16	32
Unit weight, PCF Saturated		100-120	110-130	120-140	130	

IDENTIFICATION CHARACTERISTICS

Very Soft — Exudes from between fingers when squeezed in hand
Soft — Molded by light finger pressure
Medium — Molded by strong finger pressure
Stiff — Indented by thumb
Very Stiff — Indented by thumbnail
Hard — Difficult to indent by thumbnail

4.4 RIGHT-OF-WAY CONSIDERATIONS

We have reviewed the proposed right-of-way corridor for the Mae Moh - Bangkok Transmission Lines and have reviewed the criteria utilized by EGAT for selecting this corridor. Our experience with similar projects also indicates these to be the important considerations for line routing in Southeast Asian Highlands and rural agricultural districts.

Our review of terrain and soil conditions along the Rangsit - Nakon Sawan - Bhumibol Corridor also appear to confirm the soil and terrain data descriptions for the Mae Moh - Min Buri Corridor. Socio-economic considerations include seeking to avoid community areas while attempting to maintain appropriate access to the right-of-way for construction and future inspection and maintenance requirements.

We are not aware of any major communications facilities or major governmental or defense installations which may be located adjacent to the corridor. If such are encountered, appropriate measures may be taken during final design or routing to mitigate possible RI or inductive interference.

Attempts to route lines through mountain passes are generally effective and maintaining line elevations below 600 M(msl) or 2000 FT msl are desirable in avoiding altitude correction considerations. Crossing passes with railroads, roads or other vehicular access facilities tend to minimize environmental effects and also assist in providing access to the right-of-way.

We also note the proposed Mae Moh - Chum Saeng Route parallels the Mae Moh - Phitsanulok 2 Route for a portion of its length; although this common corridor is very effective in minimizing access requirements; consideration should be given to mitigating the possibility of single catastrophies destroying the effectiveness of an entire generating source.

During final design, EGAT may wish to investigate further minimizing the effect of possible multi-circuit outages by considering alternate routes for individual transmission lines.

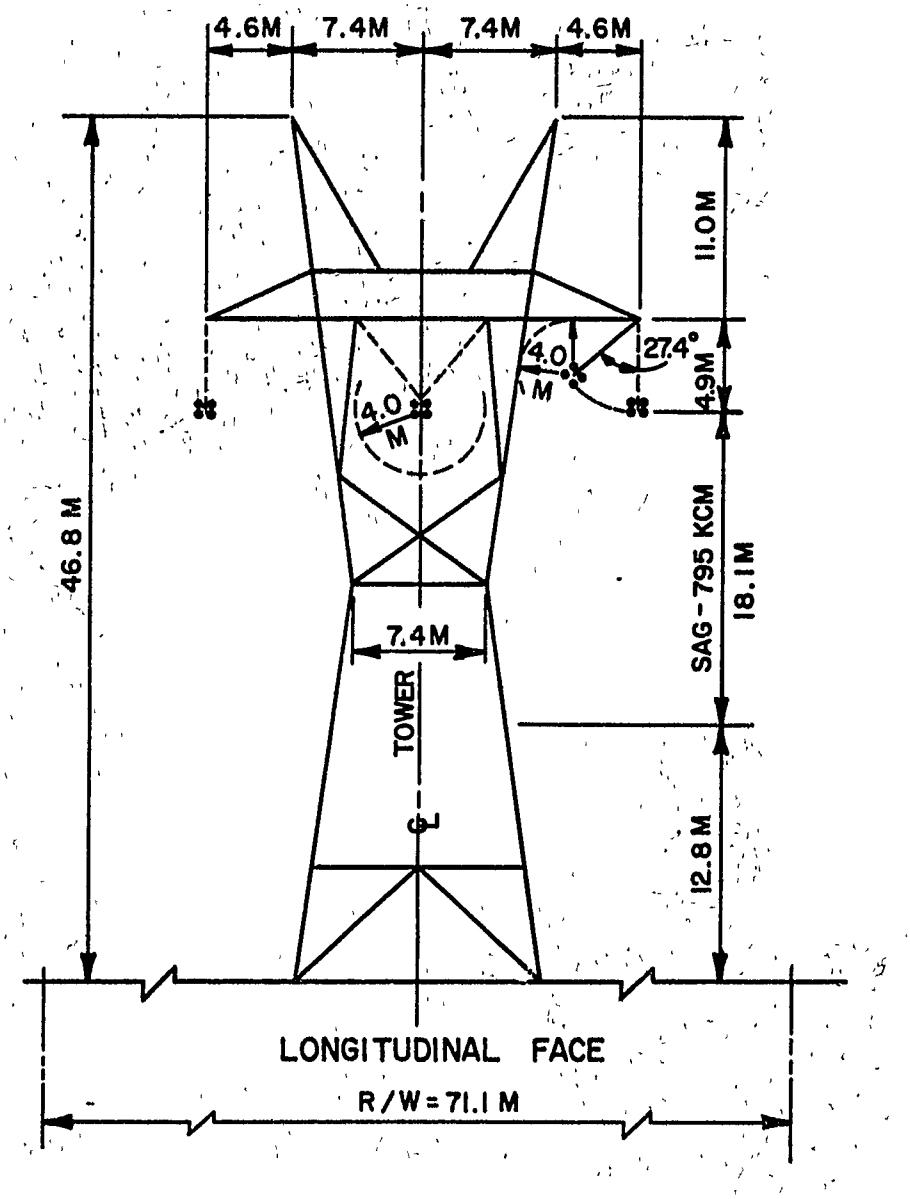

FIGURE 4-1

REV.	DATE	BY

LEMCO ENGINEERS, INC.
Consultants.
SAINT LOUIS, MISSOURI
A SUBSIDIARY OF
THE L. E. MYERS CO.

SINGLE CIRCUIT
500 KV
BASE TOWER

4-17

DWN.	CKD.	APP.	SCALE	CONT. NO.	DWG. NO.	-A-	SHEET NO. OF	REV.
/ /	/ /	/ /						

5.0 PRELIMINARY DESIGNS - SUBSTATIONS

5.1 GENERAL

The transmission system recommended in Section 1 should consist of three substations including Mae Moh, Chum Saeng and Min Buri.

Each substation is recommended to contain a 500 kV breaker-and-a-half bus arrangement and be interconnected through auto transformers to the 230 kV bus.

This section contains our recommendations concerning the 500 kV substation requirements for the Mae Moh-Bangkok Transmission System. Although we have not provided similar recommendations for the 230 kV portions of these substations, we believe EGAT's existing criteria and design philosophy will be completely satisfactory for the 230 kV portions.

We also believe that these design criteria will also be satisfactory for other 500 kV substations which are contemplated including the Ao Phai Plant and Sai Noi.

All design will be in accordance with recognized industry standards for each individual component part.

Consideration will be given to all pertinent basic parameters before detailed design begins.

Some site selection has been accomplished. However, as far as possible, areas of consideration will include:

- Future expansion as well as present use
- Site access and right-of-way for transmission lines
- Soil types for drainage and resistivity
- Transportation
- Noise levels
- Electrical effects
- Security

Problems of nature will be considered:

- Temperature
- Wind
- Rain
- Ice
- Lightning
- Earthquakes
- Contamination
- Elevation

Environmental areas of concern will include:

- Safety
- Noise
- Electrical
- Appearance

Interfacing with incoming lines will be carefully planned.

Reliability is stressed. This will include considerations of operation, safety, maintenance and outages for future expansion.

Arrangements of facilities at voltages lower than 500 kV will utilize existing EGAT designs as far as possible for integration into the EHV system.

Designs will be coordinated to allow for construction in phases as required by the power system expansion, in an orderly manner and with minimum interruption of in-service equipment. Where practical, salvaged equipment will be reused.

5.2 SUBSTATION DEVELOPMENT

Three different system development plans were considered, as detailed in other sections of this report. For each plan, substation layouts and construction phases were considered to evaluate the economic requirements of the particular alternate.

5.2.1 230/1 Alternate

This alternate was based on 500 kV final design parameters, but would be initially operated at 230 kV (Figures 5.2-7.1 and 5.2-8.1). All equipment would be installed as required by the overall power system in the final 500 kV configurations. The 500/230 kV autotransformer bays would be built, but bypassed with jumpers until the transformers would be required. Power circuit breakers and coupling capacitor voltage transformers would be purchased for 230 kV and installed in the 500 kV switchyard. These devices were considered salvagable when the system was converted to 500 kV, at which time 500 kV equipment would be purchased to replace them. Special generator step-up transformers could be used for Mae Moh Unit G8. These single-phase transformers would have double high voltage windings, for full capacity operation at 230 kV by paralleling, and full capacity operation at 500 kV by series connecting the windings. Our investigation with a manufacturer resulted in relative prices and physical details of these transformers which were used for the economic studies. We do note that the reliability of these GSU's is unknown due to their prototype nature at this voltage level.

Construction phases at Mae Moh and Chum Saeng essentially follow similar stages as the 500 kV alternate. Min Buri construction phases would be more complex, with the concurrent Ao Phai/Sai Noi construction at 500 kV in the same switchyard as the Mae Moh Project construction for operation at 230 kV. This is possible by operating one bay isolated from the rest of the station, but is not recommended. System economics indicated this alternate was not advantageous.

5.2.2 230/2 Alternate

This alternate would also be for initial operation at 230 kV. The principal differences are that Mae Moh's generator step-up transformers would be for single voltage operation at 500 kV, operated into only that portion of the 500 kV switchyard as required for protection and operation, then stepped down through a 400 MVA autotransformer to 230 kV. The autotransformer bay would be the same as for the ultimate system. Special 230 kV line termination bays would

128

be built for the lines to Chum Saeng. Except for salvaging the PCB's, these line bays would be abandoned when operation began at 500 kV. Development of Chum Saeng and Min Buri would be similar to the 230/1 Alternate development.

Mae Moh's initial 1986/87 construction (Figure 5.2-4.1) consists of one 500 kV PCB protecting the generator, step-up transformer, and the autotransformer to the 230 kV substation. The equipment arrangement and disconnect switches are arranged for ease in future construction. The 230 kV termination, not shown on the one line diagram, would be a one element continuation of the existing 230 kV switchyard. Two line terminals would also be built in the 230 kV yard. These would be jumpered to the transmission line deadend structures of the Chum Saeng lines. The 1991 expansion (Figure 5.2-4.2) adds seven PCB's in a folded breaker-and-one-half arrangement. These positions are for Generator No. 9 and its GSU, and for the Chum Saeng line terminals, now operated at 500 kV. The 230 kV line terminals are abandoned. Bus work and disconnect switches are included for the PCB and GSU of Generator No. 10, added in 1992 (Figure 5.2-4.3) completing this project.

Chum Saeng's 1986/87 construction (Figure 5.2-5.1) consists of three full bays of 500 kV bus work arranged in a folded breaker and one half. 230 kV breakers are provided for protecting the lines from Mae Moh. Breaker Positions 1 and 3, and Transformer Positions T1 and T2 are jumpered between the disconnect switches, as are the breaker positions of the 230 kV bays (not shown), effecting bus ties to the existing switchyard. Breaker Positions 6 and 7 are jumpered between the disconnect switches, for initial operation as a double breaker switchyard. Breaker 7 is added in 1988 (Figure 5.2-5.2) with the first 230 kV line to Min Buri, completing this breaker-and-one-half bay. When the station is converted to 500 kV operation in 1991 (Figure 5.2-5.3) the five 230 kV breakers are salvaged and replaced with 500 kV PCB's. Additional 500 kV PCB's are added in Positions 6, 1, 2, and 3. Stepdown autotransformers T1, T2, and T3 are added, the third unit being connected to the position for the future second line to Min Buri. An additional 230 kV bay position is required for this transformer. The five 230 kV breakers removed will be used in this bay position and to replace the jumpered positions of the previously built 230 kV bay, for transformer low side protection. When the second line to Min Buri is added in 1993 (Figure 5.2-5.4) autotransformer T3 is removed and its bay position used to protect this line. The transformer may be moved to Min Buri and used by the Ao Phai Project. The 230 kV bay is abandoned, and the two PCB's salvaged.

Min Buri's development begins in 1988 (Figure 5.2-6.1) with the construction of one electrically isolated 500 kV breaker-and-one-half bay operated at 230 kV, one 230 kV PCB, and a 230 kV low side

position without breakers. A transformer position is constructed, but jumpered, to effect a single bus tie to the existing 230 kV switchyard. Isolation is maintained from the 500 kV Ao Phai-Sai Noi construction by locking open the disconnect switches, as shown on the one line diagram. When the Mae Moh Project converts to 500 kV in 1991 (Figure 5.2-6.4) transformer T2 and PCB's 7 and 9 are installed and PCB 8 replaced, integrating the system into the Ao Phai construction. The second Chum Saeng 500 kV line is added in 1993 (Figure 5.2-6.5) by adding one PCB to a Sai Noi line bay, completing the Project. Because of the concurrent construction of the Mae Moh Project and the Ao Phai Project some of the estimated Mae Moh costs may not be precise; however, the relative costs of the Mae Moh alternates will be valid for comparison of the alternates.

5.2.3 500 kV Alternate

This system's initial operation is at 500 kV. All construction phases are coordinated with the ultimate system development, except the following:

1) Mae Moh Generator No. 8 would initially be temporarily connected to G9's position at 500 kV, to prevent open-ended operation of the Chum Saeng lines in the event of a breaker failure.

2) Chum Saeng would have a third autotransformer through the years 1987-1992 connected to the Min Buri Line 2 bay position.

Mae Moh's initial 1986/87 construction (Figure 5.2-1.1) consists of seven breakers in a folded breaker-and-one-half arrangement for two lines to Chum Saeng, one tie transformer to the existing 230 kV switchyard, and one generator and GSU. Consideration was given to initial operation as a ring arrangement. However, with the addition in 1991 (Figure 5.2-1.2) of the second 300 MVA generator and GSU, and the required conversion to breaker-and-one-half for system dependability, the ring alternative was dismissed as impractical. When Generator No. 9 is installed, G8 is reconnected as described above, and Breaker No. 3 is added, replacing the previous jumpers. Generator No. 10, and its GSU are added in 1992 (Figure 5.2-1.3) and PCB No. 9 is added, completing the substation.

Chum Saeng is constructed in 1986/87 (Figure 5.2-2.1) with two lines to Mae Moh and 3 autotransformer stepdowns to 230 kV. The 230 kV bays are not shown, but would be continuation of the existing

130

switchyard. Transformer T3 is a temporary unit and is connected to the future Min Buri Line 2 terminal. The eight 500 kV PCB's are connected in a folded breaker-and-one-half arrangement. The addition of one 500 kV PCB in 1988 (Figure 5.2-2.2) terminates the first Min Buri line. The second Min Buri line, in 1993 (Figure 5.2-2.3) requires no additional PCB's. Transformer T3 is removed and may be reused at Min Buri by the Ao Phai Project. Its 230 kV PCB's are salvaged, and the remaining facilities are abandoned.

Min Buri's 1988 construction, Figure 5.2-3.1, consists of one 500 kV PCB and one autotransformer in one bay position of a traditional breaker-and-one-half arrangement. The second Mae Moh Project line, added in 1993, Figure 5.2-3.5, would be in an Ao Phai Project bay, as shown on the one line. The economics of this station's construction, and cash flow are based on the premise that it is physically independent of the Ao Phai Project. Consequently the value assigned per year result in a three-breaker ring physically orientated in a breaker-and-one-half arrangement. This has been consistently followed in economic evaluation of the Mae Moh Project alternatives, and yields a valid comparison between the alternatives.

5.3 PHYSICAL DESIGN

In this section we will discuss the design parameters of 500 kV substations only.

Ultimately all substations will be a full breaker-and-one-half scheme. This is a preferred 500 kV configuration and offers a high degree of reliability for the system.

The actual physical bus arrangements at Mae Moh and Chum Saeng are inverted configurations. This keeps land requirements to a minimum and allows a convenient location for line disconnect switches and provides for an easy method of adding onto the bus for future additions. The physical bus arrangement at Min Buri is a traditional breaker-and-one-half configuration. All breakers and lines will be provided with disconnect switches. Grounding blades will be utilized on line and transformer switches.

As far as practical all stations have been layed out to keep incoming or outgoing lines, generator transformers and substation transformers in opposite bus positions and different bay locations to improve reliability in case of a main bus fault.

A dual cable trench system should be utilized to separate primary and secondary relay and control circuits and AC and DC power supplies.

Bus reactors will be capable of being connected to either of the main buses or line terminals, or transformer tertiary windings, as applicable.

Shielding will be provided by means of static wires utilizing deadend structure masts and individual static towers.

Grounding will utilize the appropriate size copper conductor, grid spacing, individual equipment ground mats, and structure and fence grounds.

5.3.1 Clearances

For purposes of preliminary design and estimating costs of the 500 kV system, the following clearances have been used:

.. Minimum Clearance (metal to metal)	
Phase to phase, FT centerline to centerline	20
Phase to metal ground (electrical) FT	16
.. Main Bus	
Phase spacing, FT centerline to centerline	25/25
Maximum distance between supports, FT	40
Height above ground, FT	50
.. Bay Bus	
Phase spacing, FT centerline to centerline	25/35
Maximum distance between supports, FT	40
Height above ground, FT	30

Values were obtained as nominal from IEEE Transactions on Power ApparatuS and Systems, Volume PAS-88 No. 6, June 1969, Pages 854-861, titled "500 kV AC Substation Design Criteria Summary of Industry Practices" (Reference 11).

132

5.3.2 Equipment

The 500 kV equipment types and ratings are preliminary and will be changed as necessary by final design considerations and system requirements.

A basic impulse level (BIL) of 1800 kV was selected.

Power circuit breakers are SF-6 gas insulated rated 3000 amperes continuous, 50 KA interrupting capacity and 2 cycle interrupting time.

It should be mentioned that in the past 10 years some circuit breaker manufacturers have attempted to develop a one cycle circuit breaker. Basically it was achieved by modifying the existing two cycle circuit breakers. However, along with providing a one cycle interrupting time, these breakers would have the following disadvantages:

- Relay sensitivity or security might be sacrificed, since relays would operate on the transient basis only;

- One cycle breakers do not have a sufficient amount of proven field expeirence;

- One cycle breakers would be considerably more expensive than two cycle

Switches are 3000 ampere vertical break.

All generator and substation transformers will be single phase units. Substation transformers will have minimum thirty-five percent capacity tertiary windings.

Generator transformers are rated 74.33/98.67/123.33 MVA, 500/20 kV, 1Ø.

Substation transformers are rated 80/106.67/133.33 MVA, 500/230/34.5 kV, 1Ø.

Line traps are rated 3000 amperes.

Reactors will be supplied to substation buses, line terminals, or transformer tertiaries as required.

SCADA Remote Terminal Units (RTU) will be used.

5.3.3 Material and Hardware

Bus will be 5" aluminum alloy 6063-T6 Schedule 40 with welded connections and fittings.

Control cable will be shielded.

Steel structures will be lattice.

Surge arresters will be of the new non-linear metal oxide varistor design. These units give greatly improved switching surge protection over conventional station class arresters.

5.4 REACTOR INSTALLATION

As it was indicated in Section 3, the system under consideration requires a significant amount of shunt reactors to be connected to each section of the 500 kV lines. This necessitates from the fact that the flow of capacitive charging current through the system impedance results in voltage increases on the system that are especially serious on the long EHV lines.

Some effects of the high capacitive charging current are as follows:

- It causes voltages higher than equipment ratings and their operating limits;
- The capacitive reactance of EHV lines may intensify switching surge overvoltages;
- Generators must absorb their proportionate amount of the leading VARS, and this can reduce unit loadings or cause stability problems.

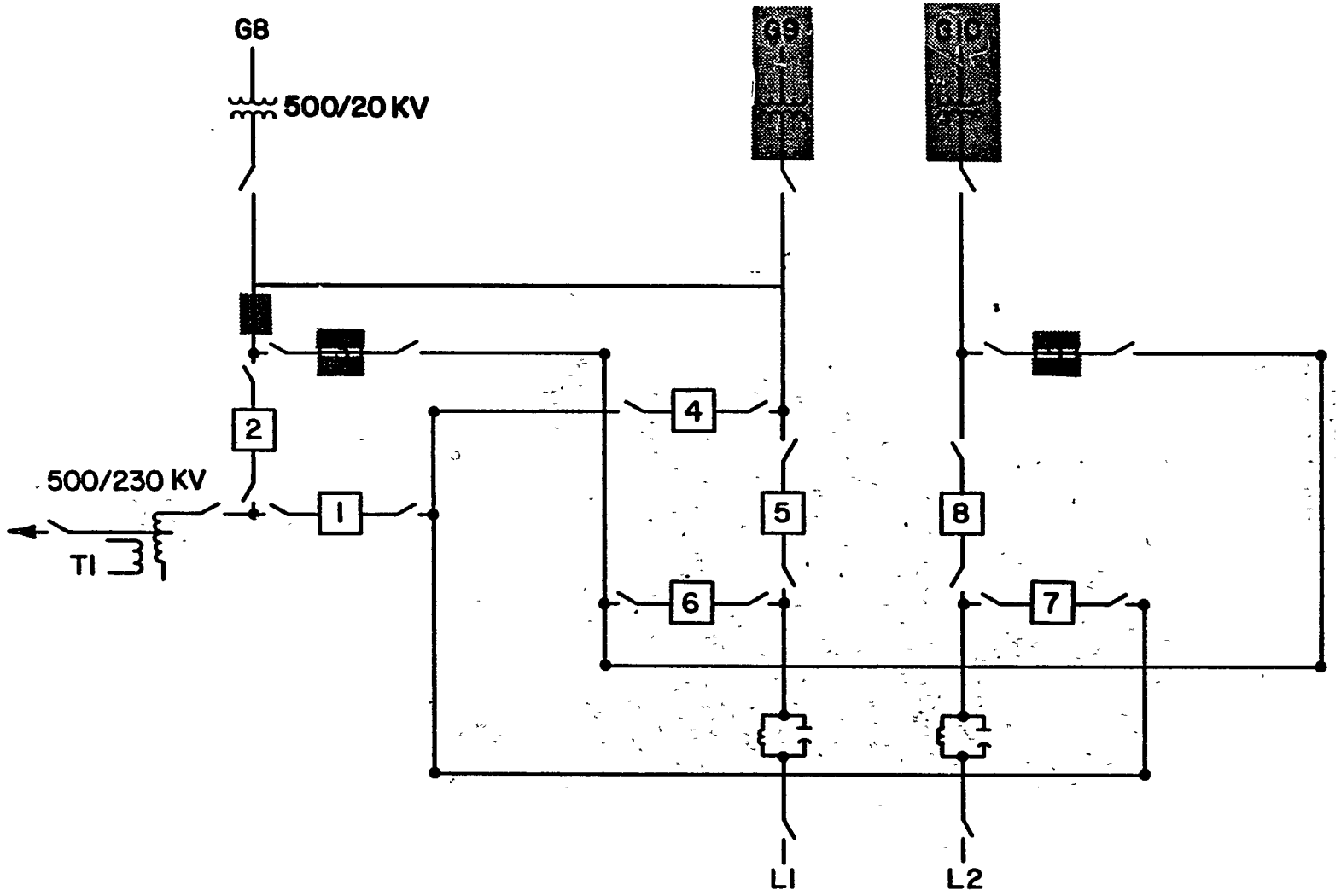

MAE MOH PRELIMINARY
ONE LINE DIAGRAM 500 KV
500KV, 1986/87

FIGURE 5.2-1.1

135

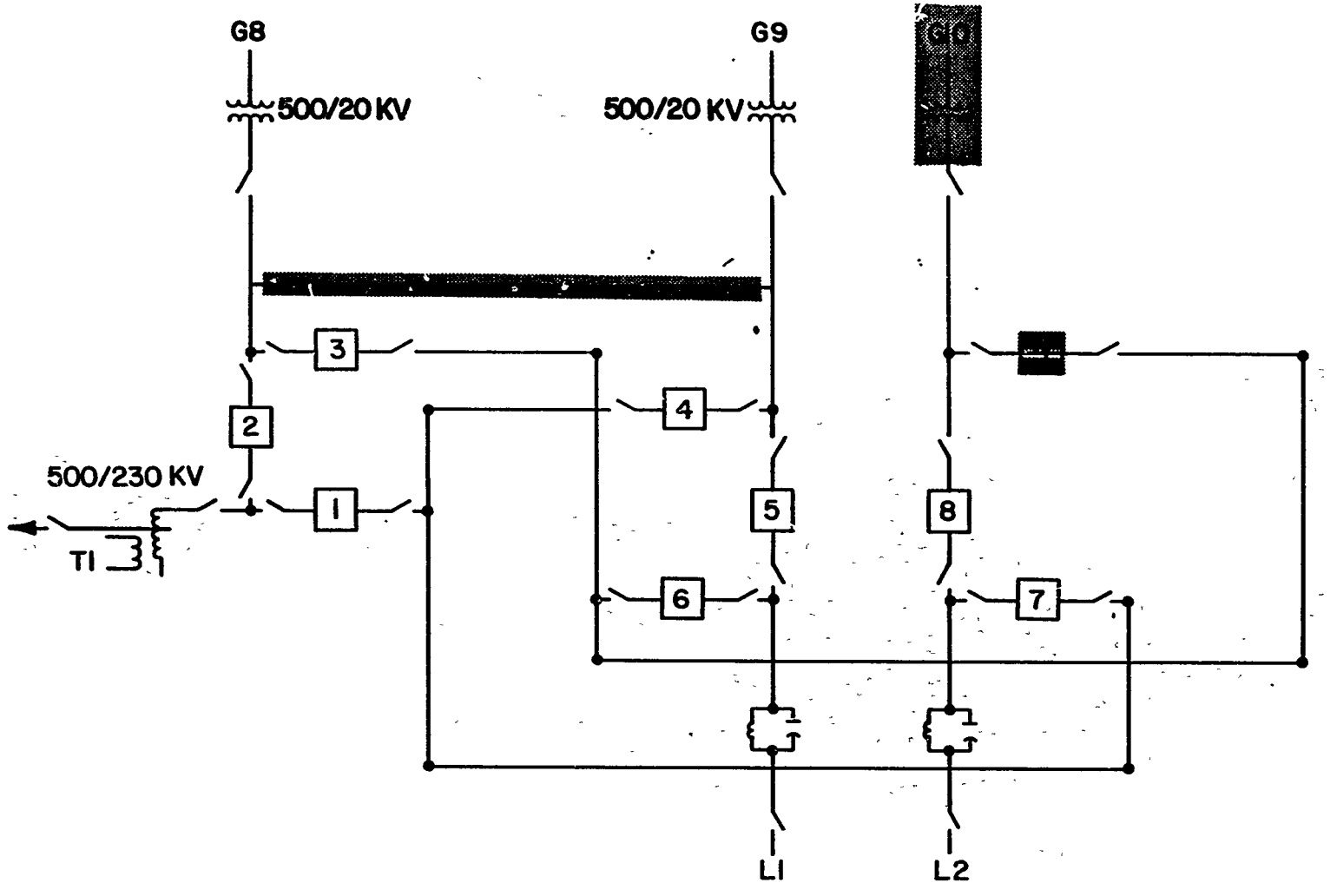

MAE MOH PRELIMINARY
ONE LINE DIAGRAM 500 KV
500 KV, 1991

FIGURE 5.2-1.2

136

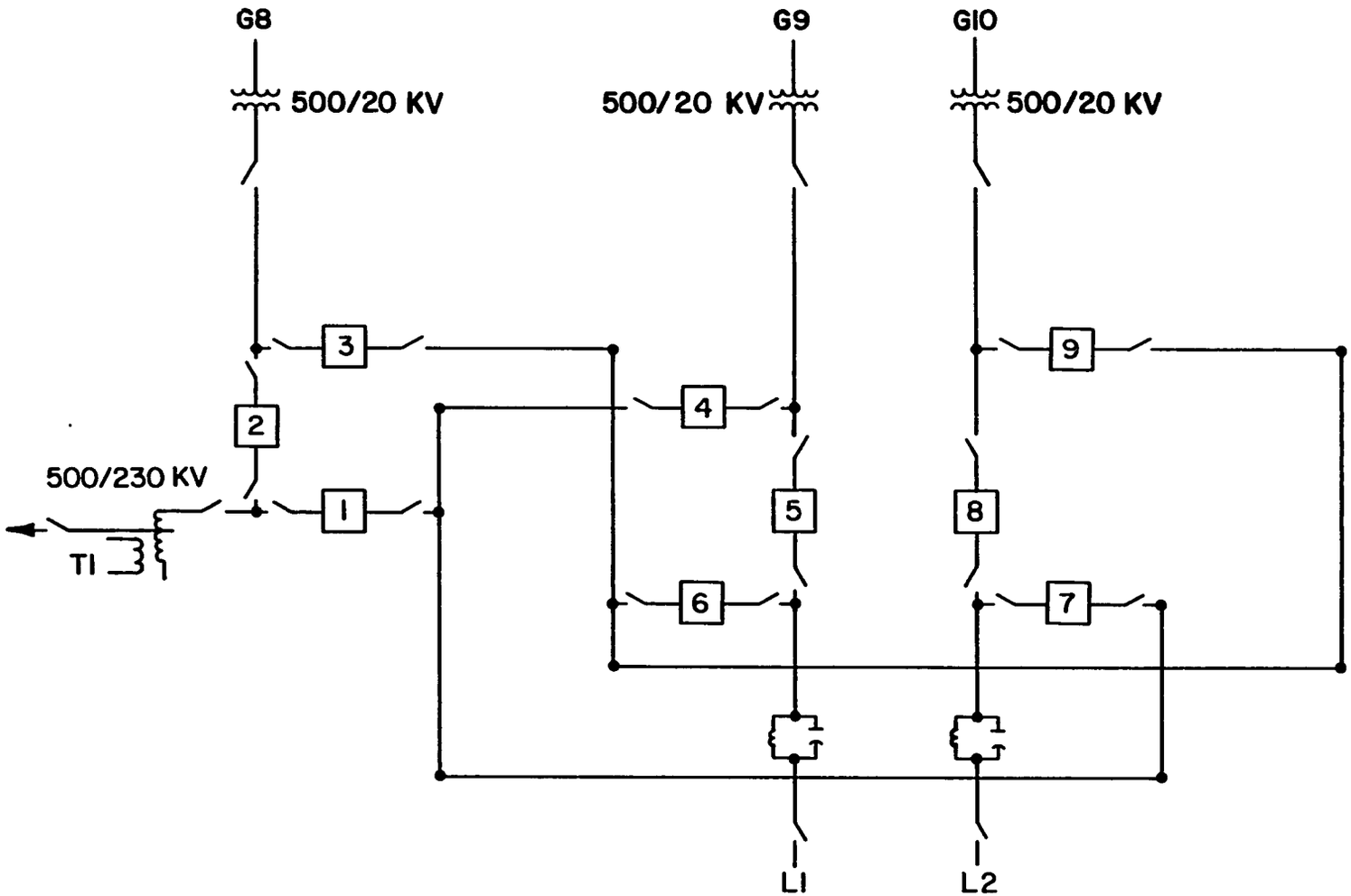

MAE MOH PRELIMINARY
ONE LINE DIAGRAM 500 KV
500 KV, 1992

FIGURE 5.2-1.3

137

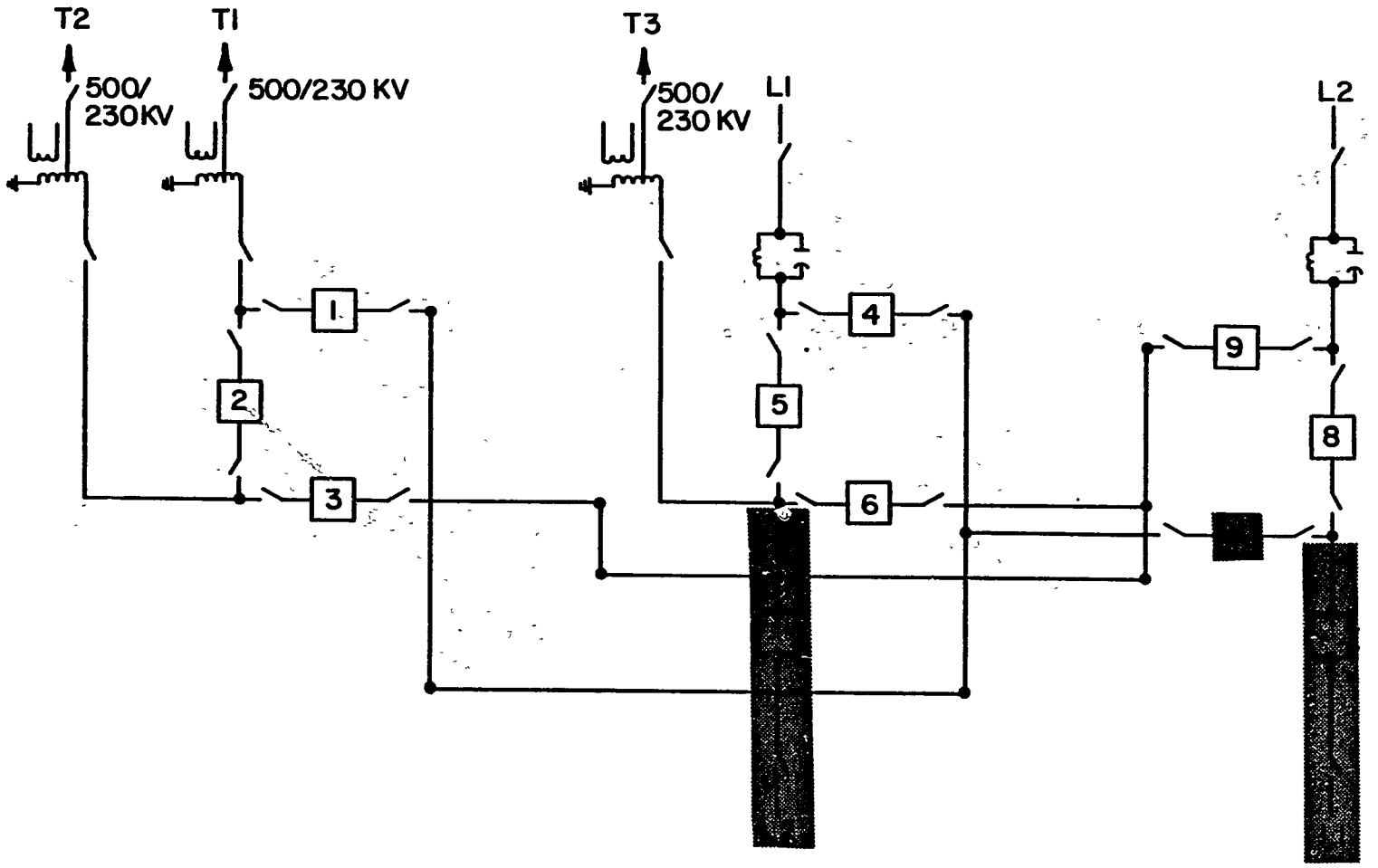

CHUM SAENG PRELIMINARY
ONE LINE DIAGRAM 500KV
500KV 1986/87

FIGURE 5.2-2.1

137

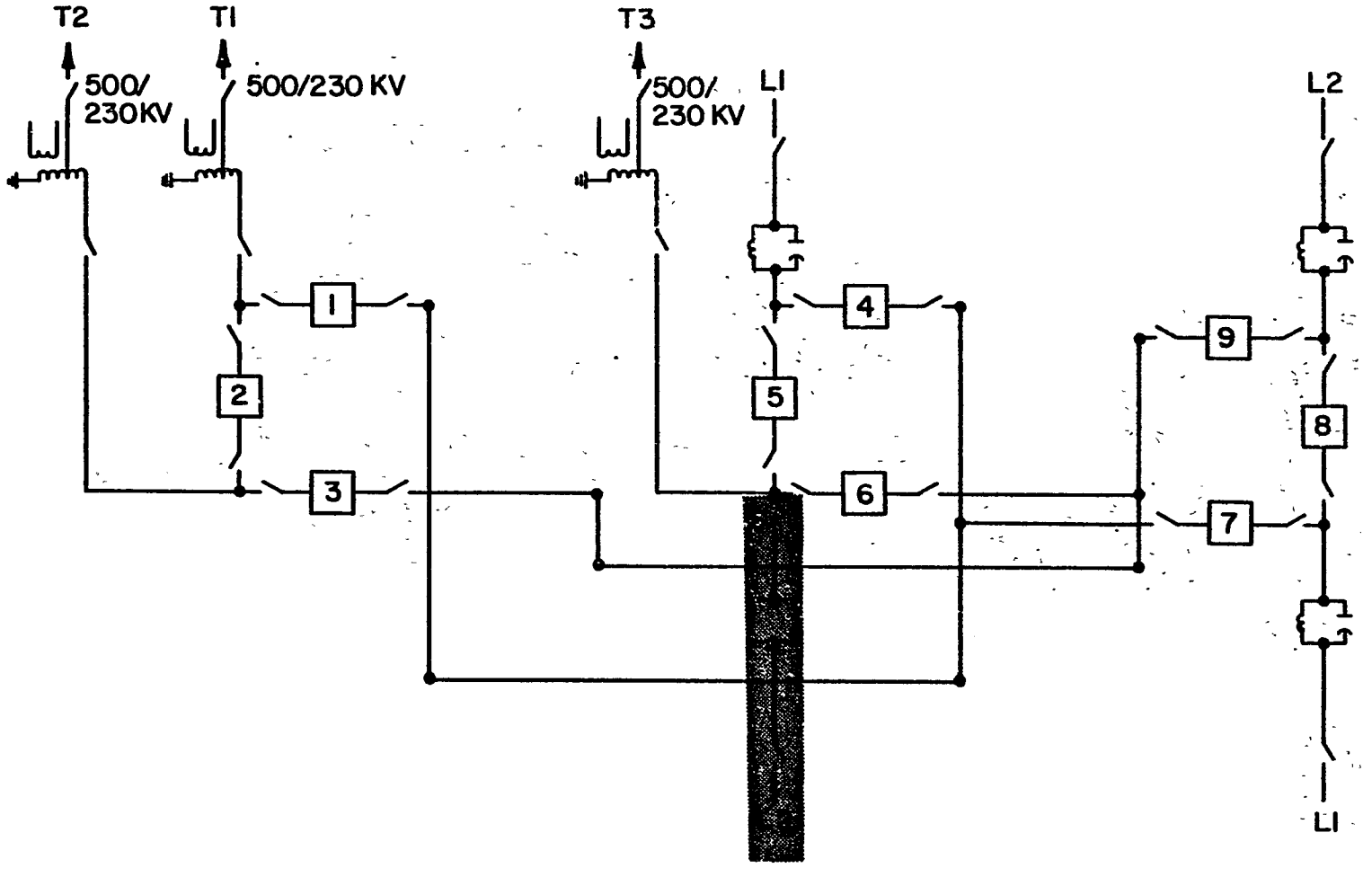

CHUM SAENG PRELIMINARY
ONE LINE DIAGRAM 500KV
500,1988

FIGURE 5.2-2.2

139

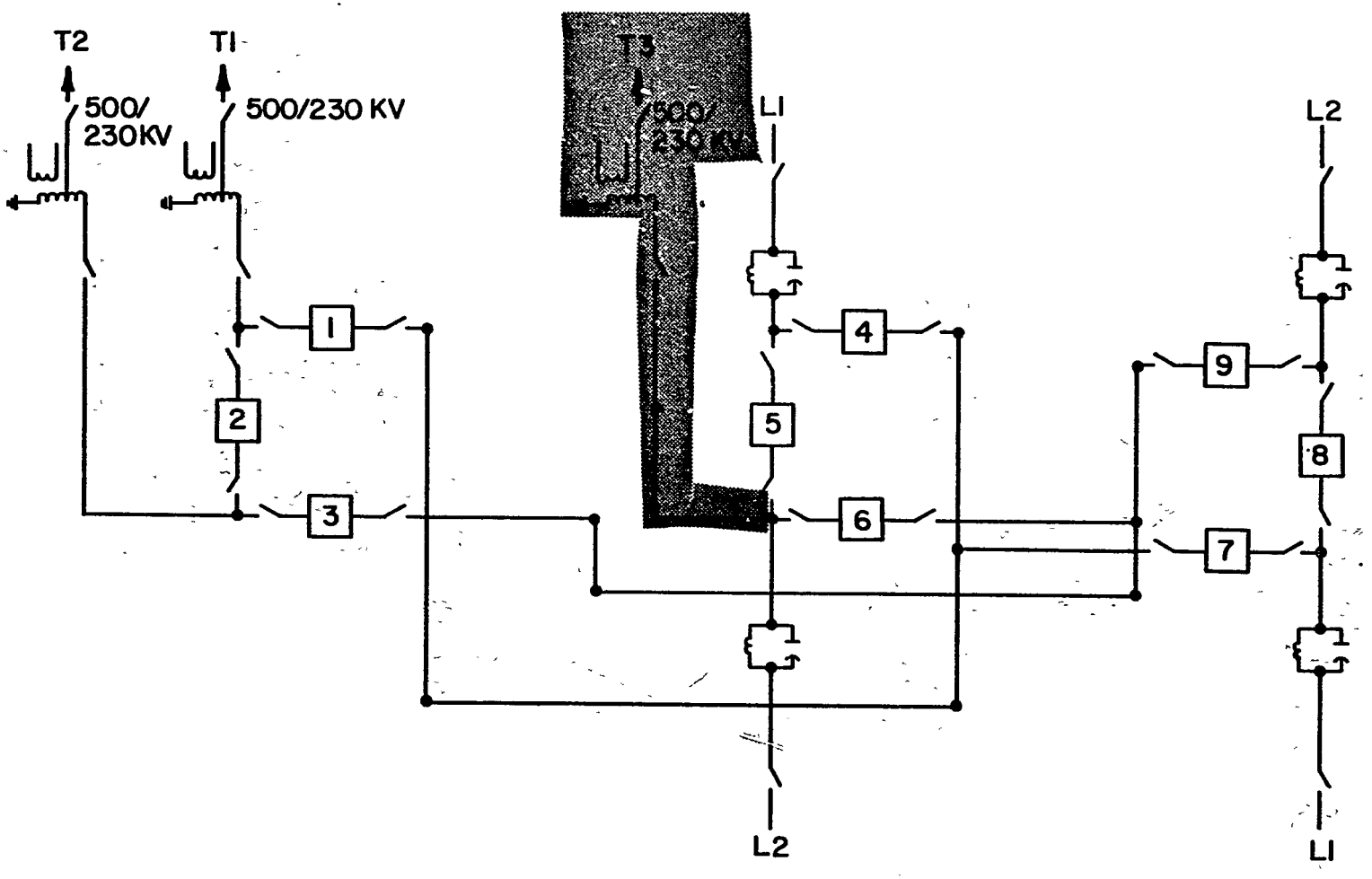

CHUM SAENG PRELIMINARY
ONE LINE DIAGRAM 500KV
500, 1993

FIGURE 5.2-2.3

140

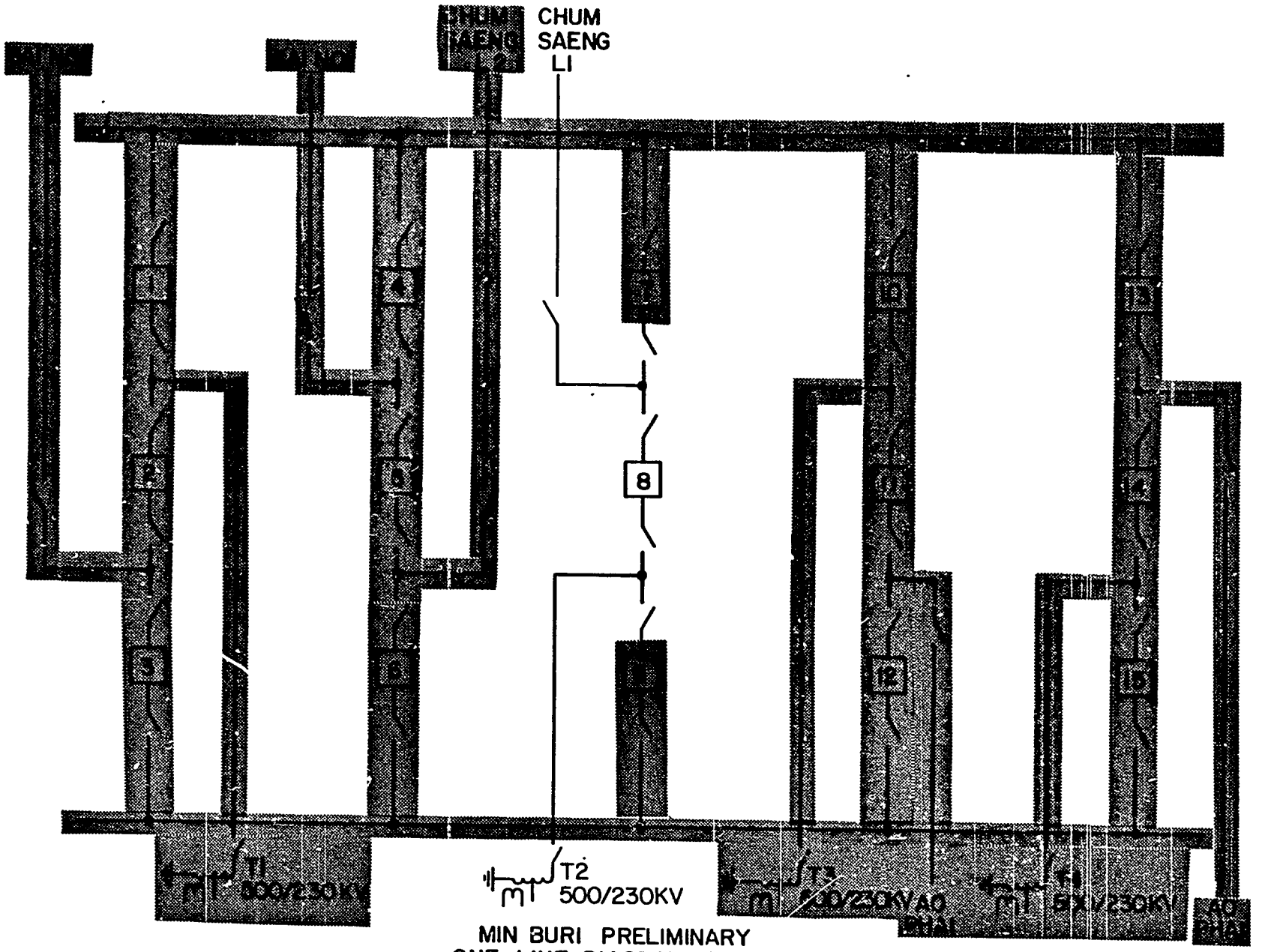

MIN BURI PRELIMINARY
ONE LINE DIAGRAM 500KV
500KV ALTERNATE 1988
MAE MOH PROJECT

FIGURE 5.2-3.1

141

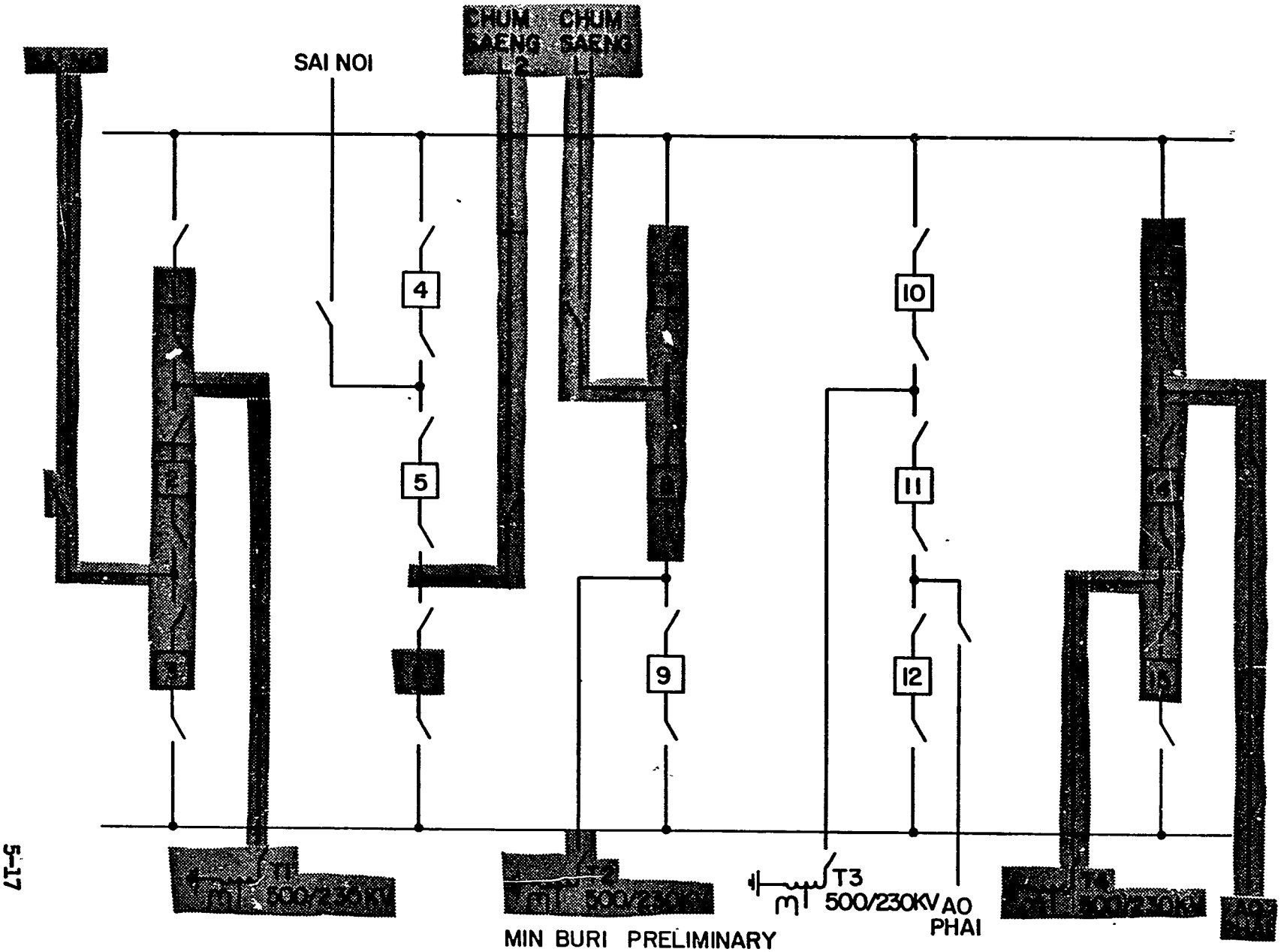

MIN BURI PRELIMINARY
ONE LINE DIAGRAM 500KV
500KV ALTERNATE 1988
AO PHAI PROJECT

FIGURE 5.2-3.2

142

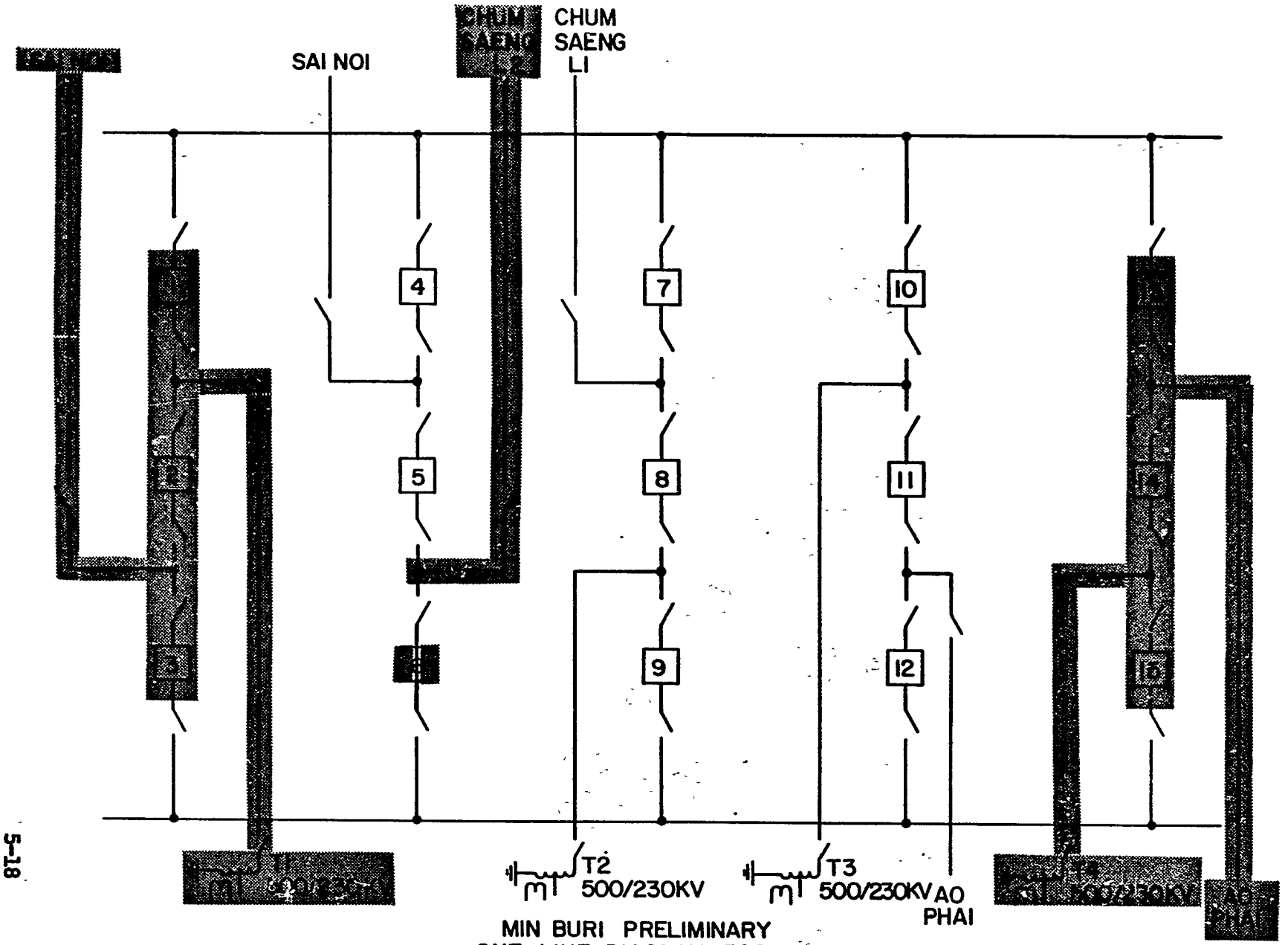

MIN BURI PRELIMINARY
ONE LINE DIAGRAM 500KV
500KV ALTERNATE 1988
AO PHAI AND MAE MOH PROJECTS

FIGURE 5.2-3.3

143

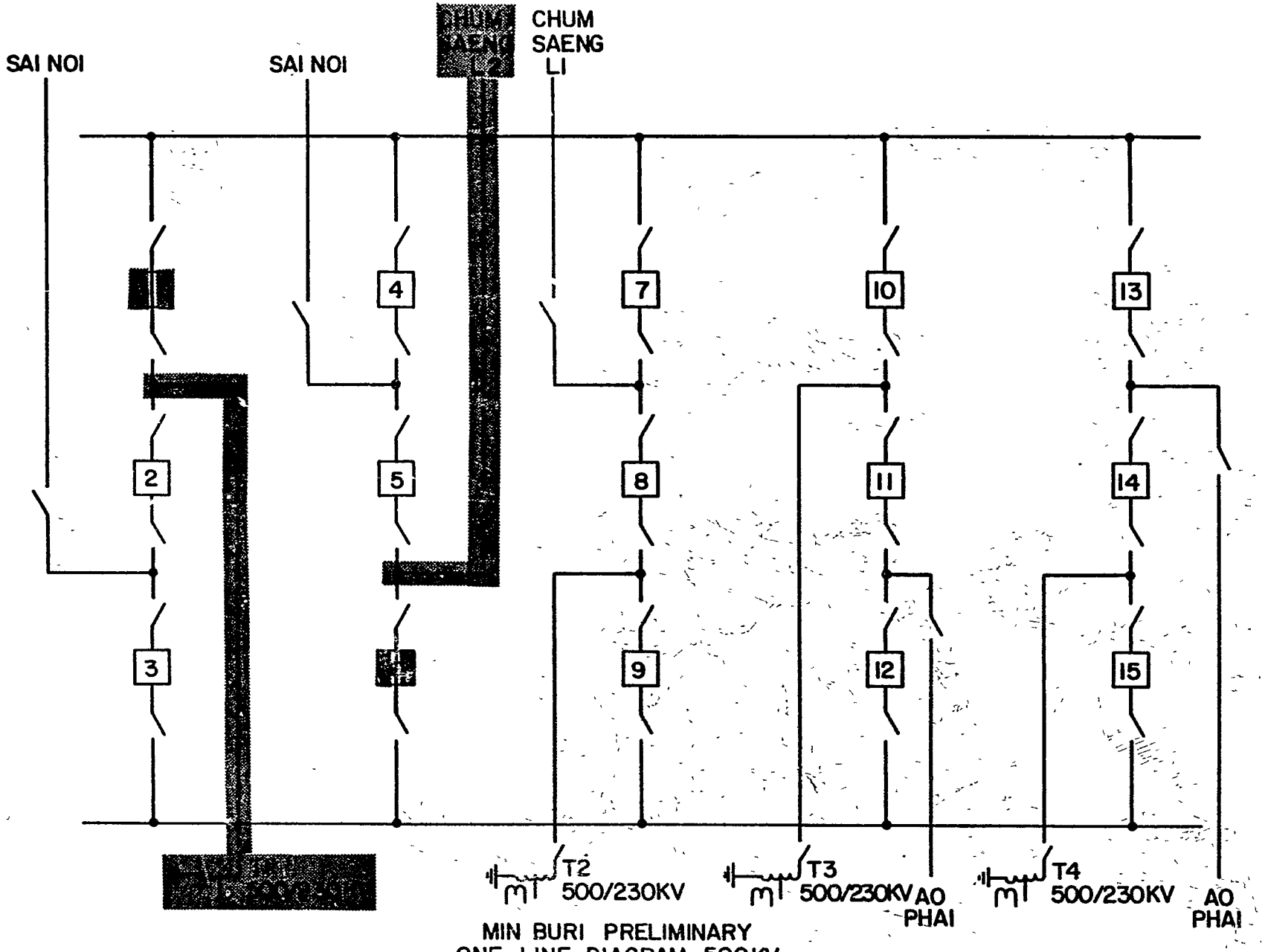

MIN BURI PRELIMINARY
ONE LINE DIAGRAM 500KV
500KV ALTERNATE 1989
AO PHAI PROJECT

FIGURE 5.2-3.4

144

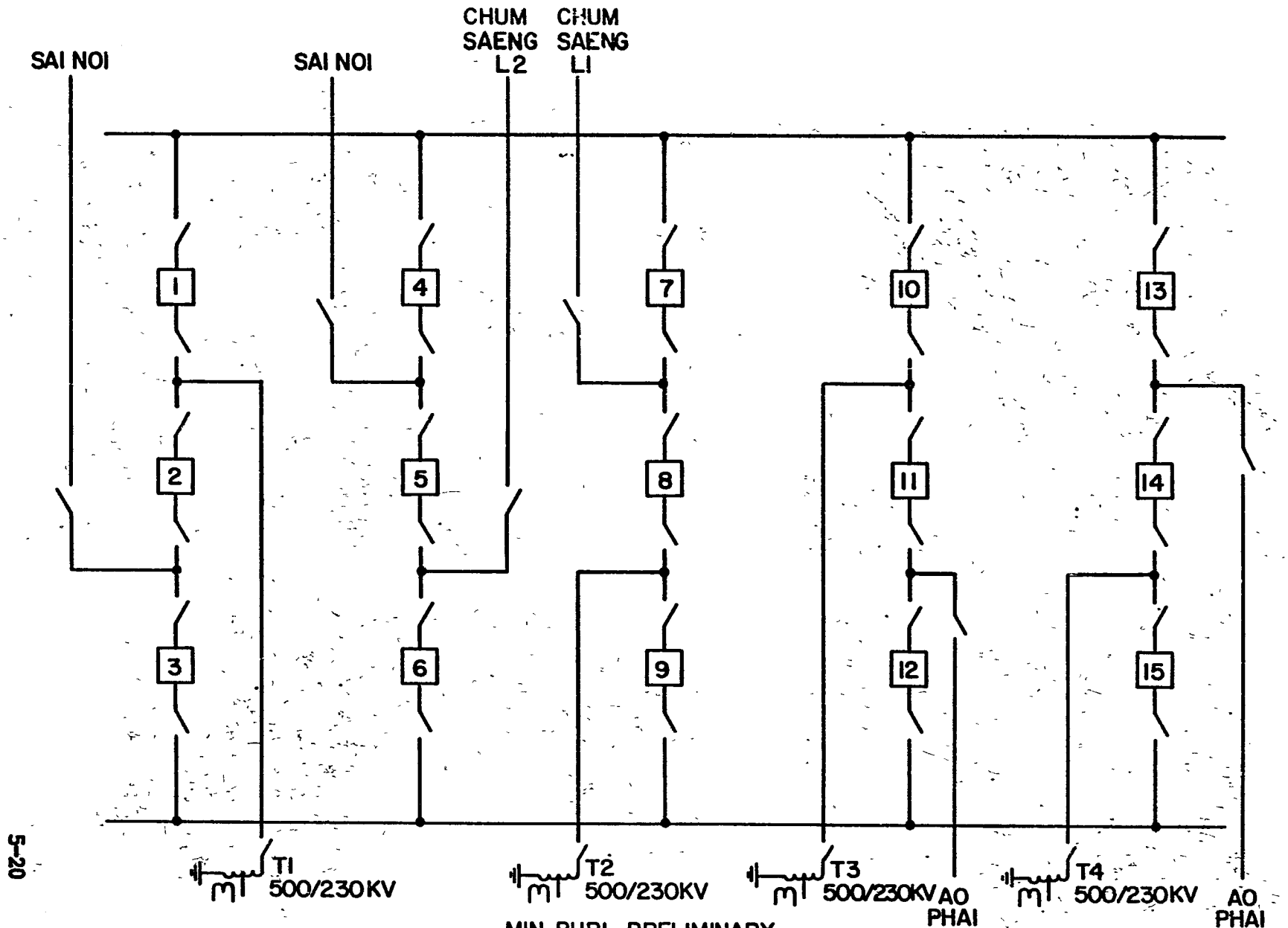

MIN BURI PRELIMINARY
ONE LINE DIAGRAM 500KV
1993
MAE MOH AND AO PHAI PROJECTS

FIGURE 5.2-3.5

145

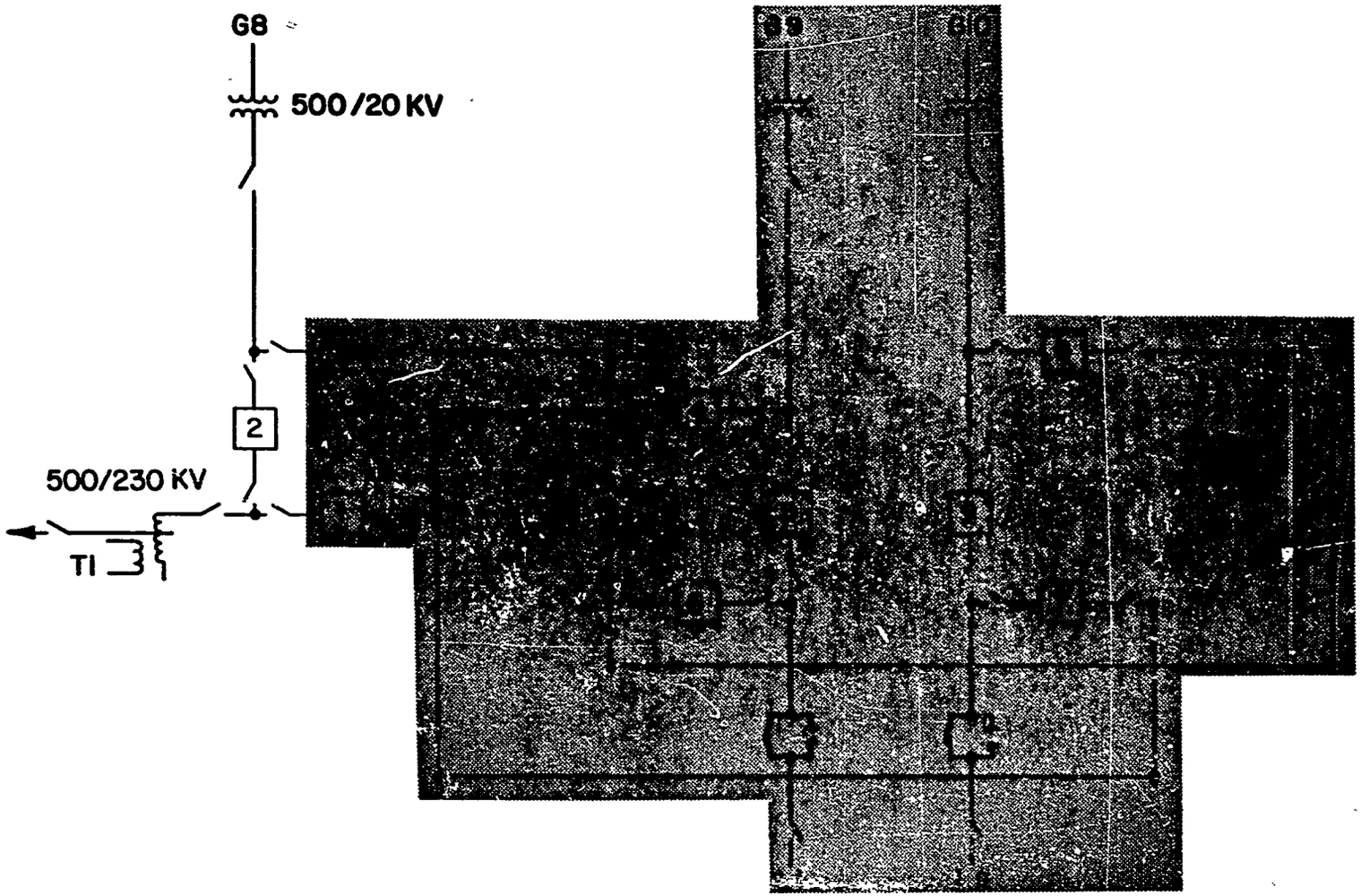

MAE MOH PRELIMINARY
ONE LINE DIAGRAM 500 KV
230/2,1987

FIGURE 5.2-4.1

146

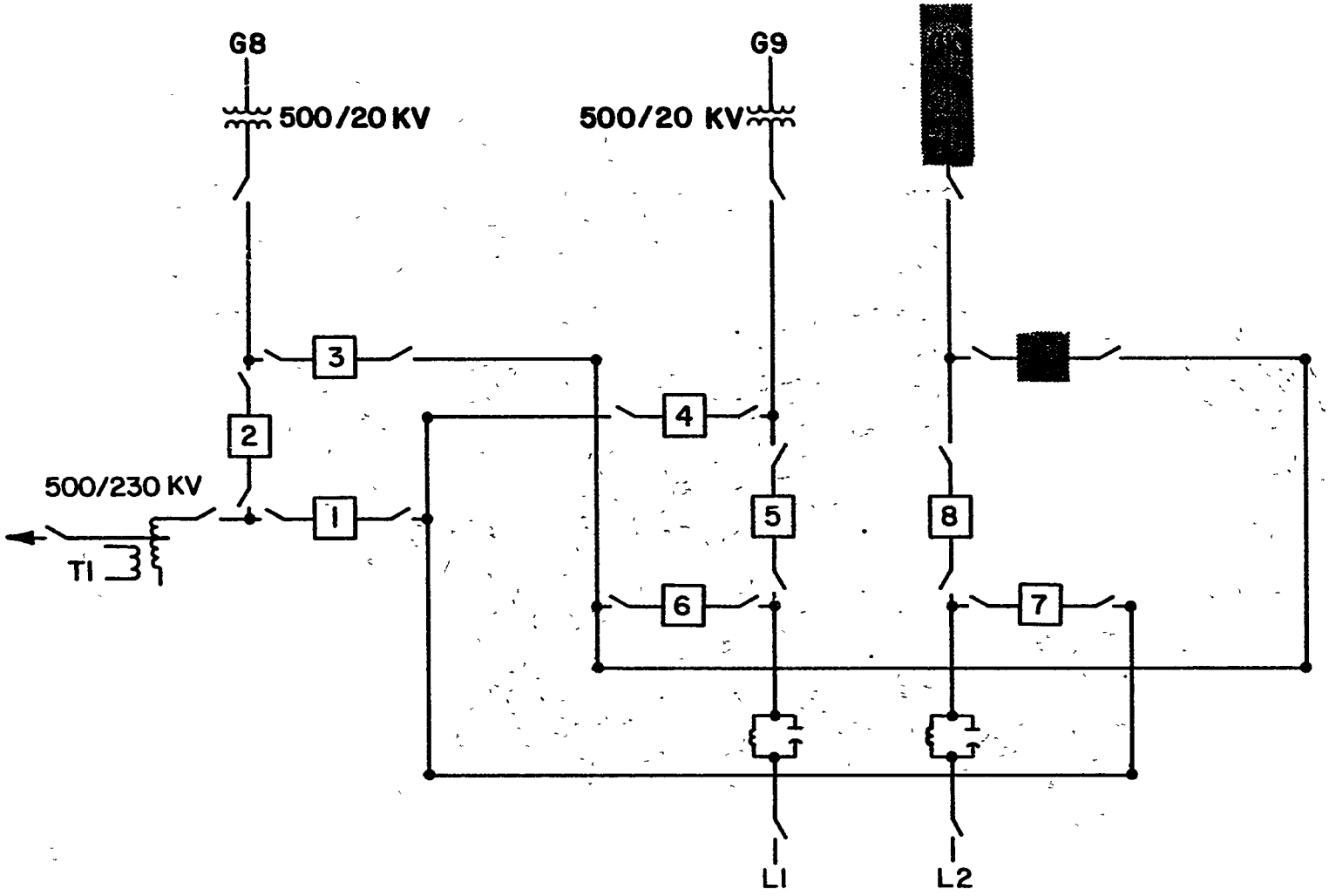

MAE MOH PRELIMINARY
ONE LINE DIAGRAM 500 KV
230/2 ALTERNATE,1991

FIGURE 5.2-4.2

147

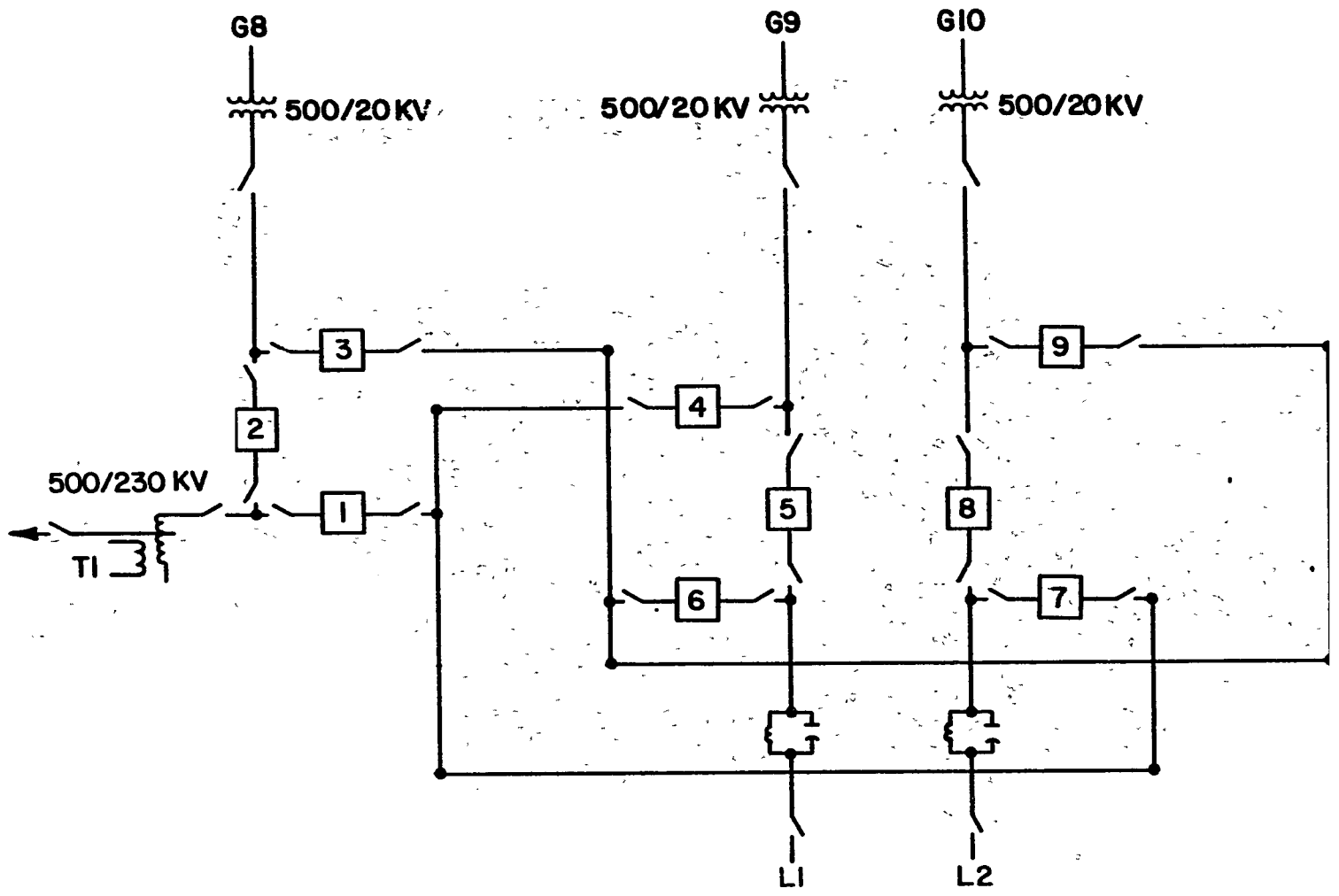

MAE MOH PRELIMINARY
ONE LINE DIAGRAM 500 KV
230/2 ALTERNATE, 1992

FIGURE 5.2-4.3

148

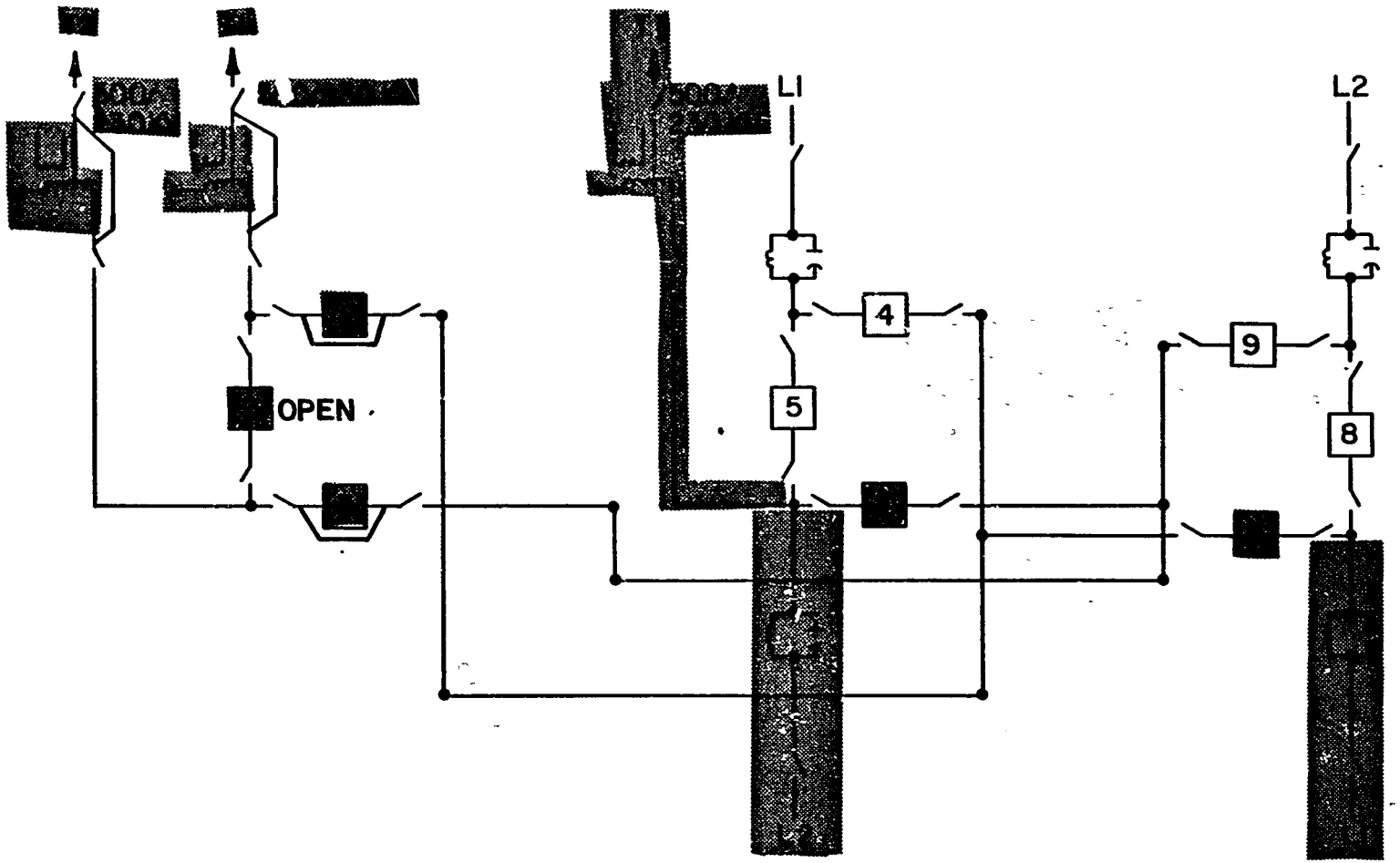

CHUM SAENG PRELIMINARY
ONE LINE DIAGRAM 500KV
230/2 ALTERNATE, 1987
FIGURE 5.2-5.1

169

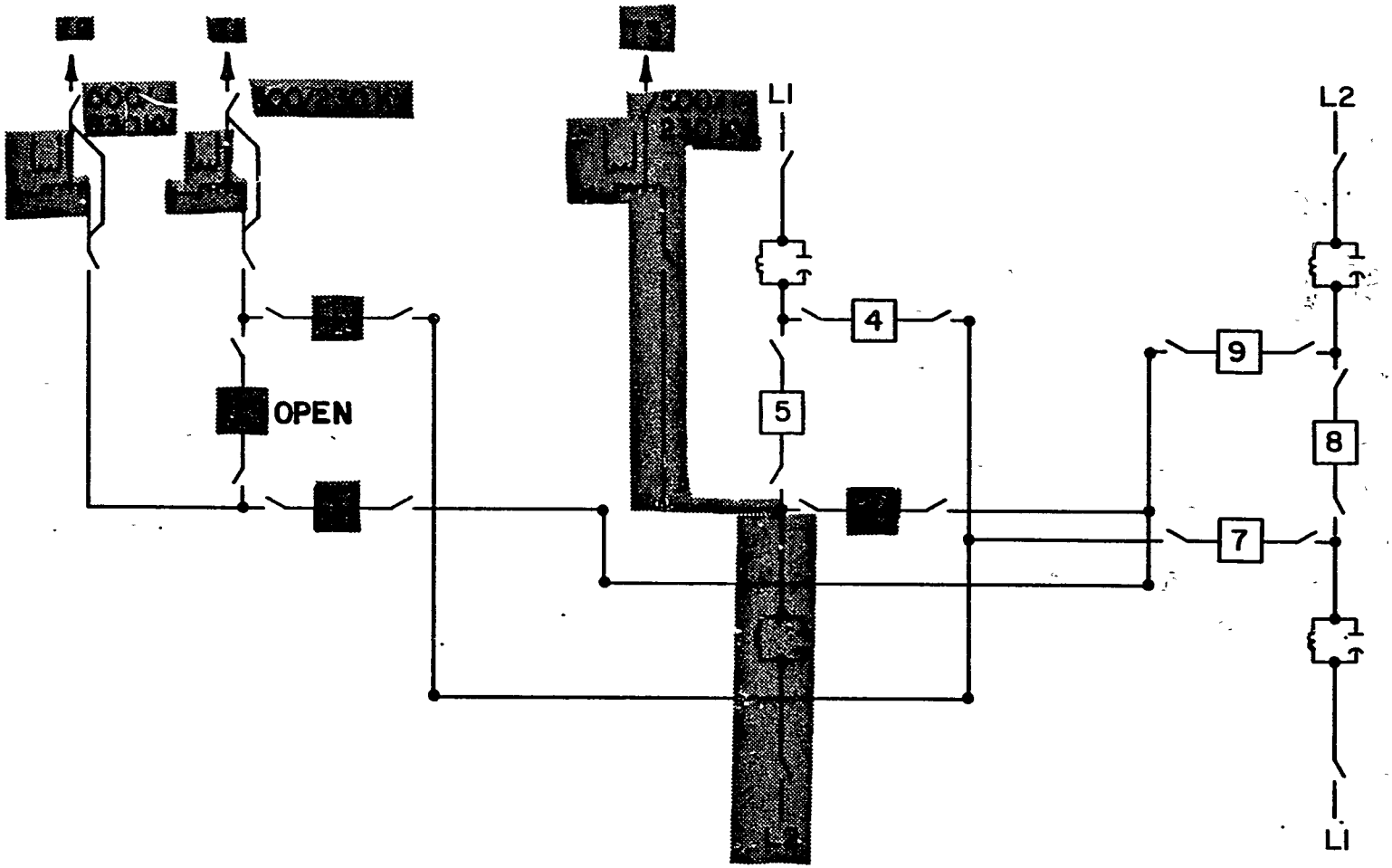

CHUM SAENG PRELIMINARY
ONE LINE DIAGRAM 500KV
230/2 ALTERNATE, 1988

FIGURE 5.2 -52

150

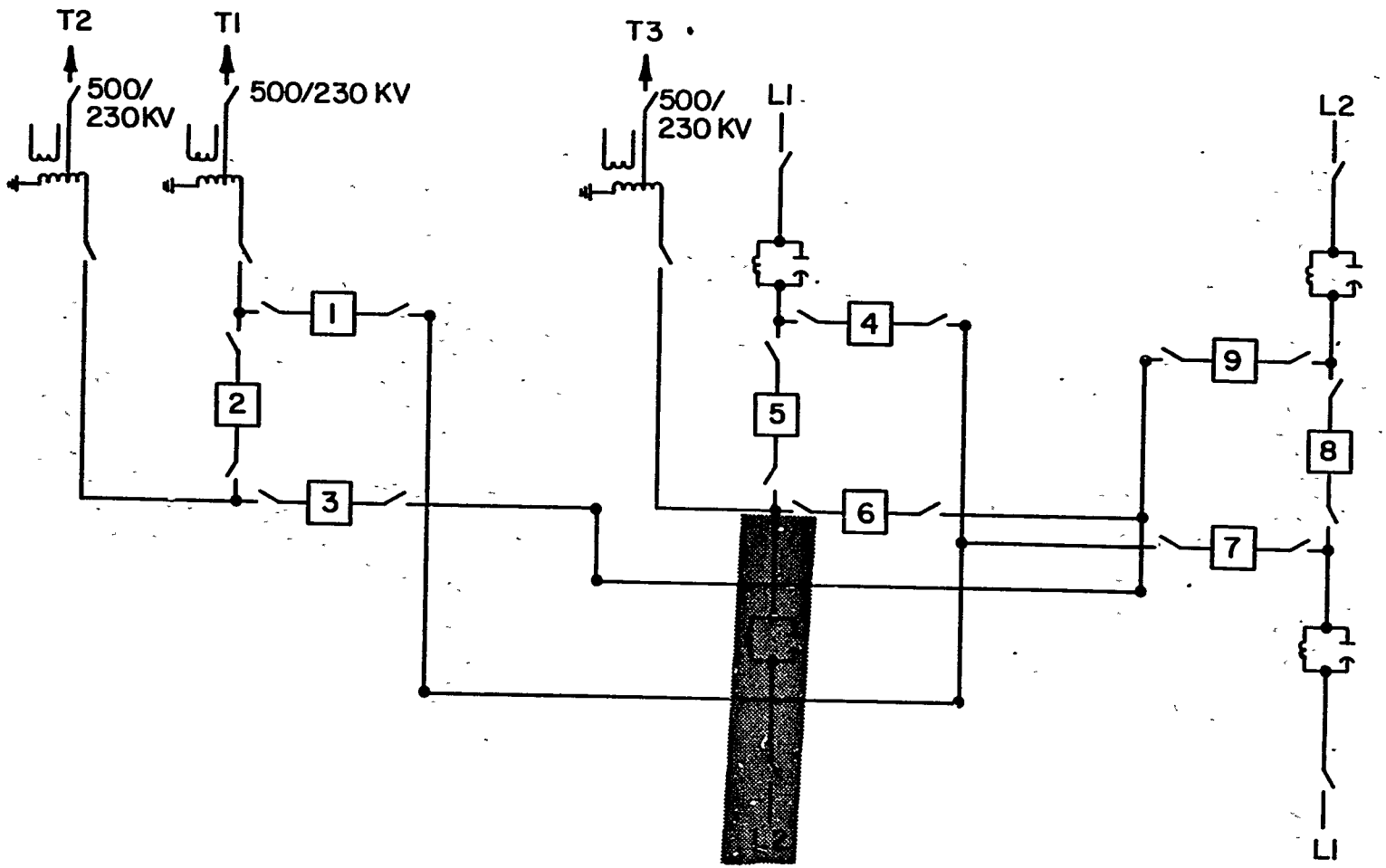

CHUM SAENG PRELIMINARY
ONE LINE DIAGRAM 500KV
230/2 ALTERNATE, 1991

FIGURE 5.2-5.3

151

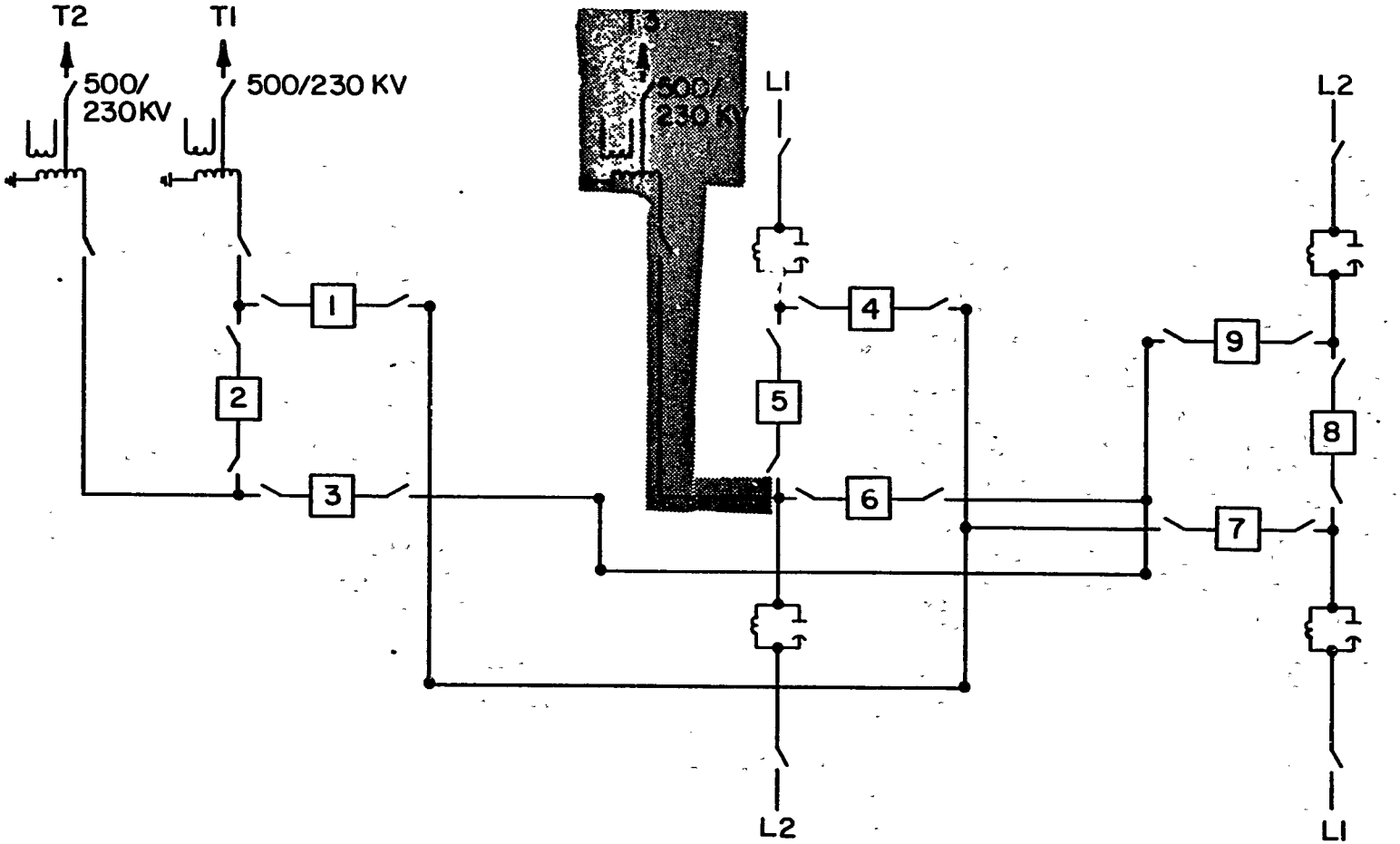

CHUM SAENG PRELIMINARY
ONE LINE DIAGRAM 500KV
230/2 ALTERNATE, 1993

FIGURE 5.2-5.4

152

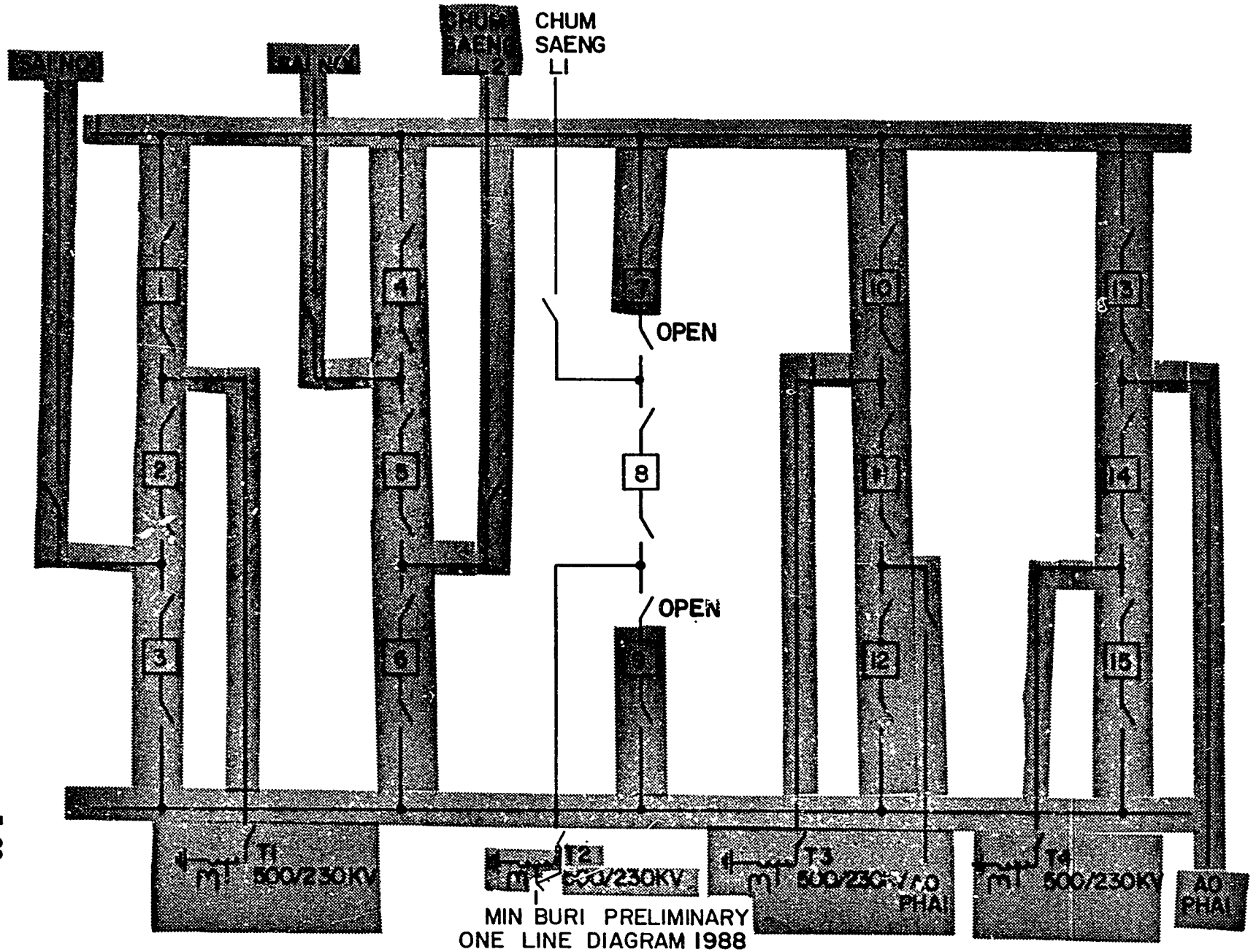

MIN BURI PRELIMINARY
ONE LINE DIAGRAM 1988
230/2 ALTERNATE
MAE MOH PROJECT

FIGURE 5.2-6.1

153

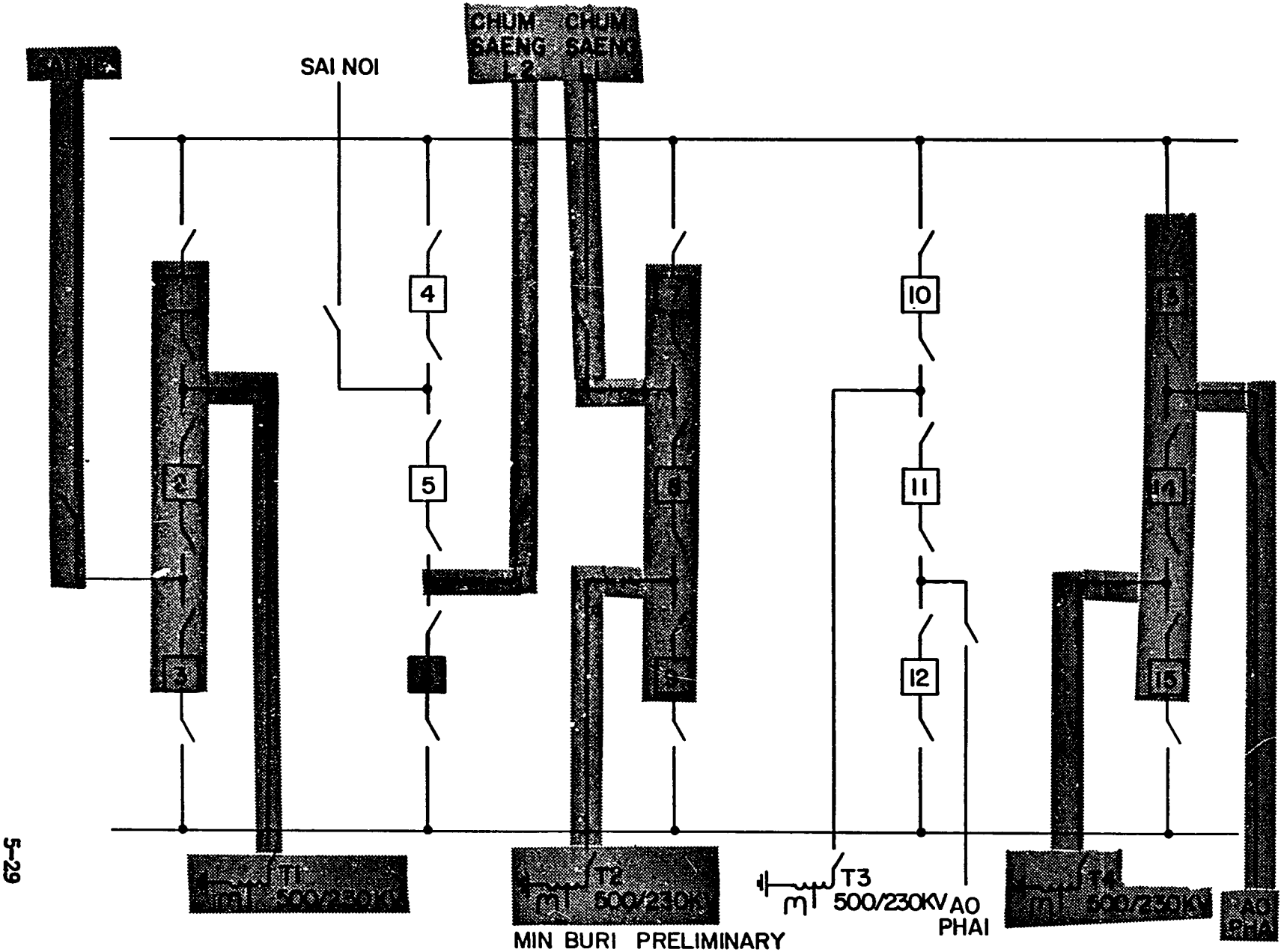

MIN BURI PRELIMINARY
ONE LINE DIAGRAM 500KV
230/2 ALTERNATE 1988
AO PHAI PROJECT

FIGURE 5.2-6.2

154

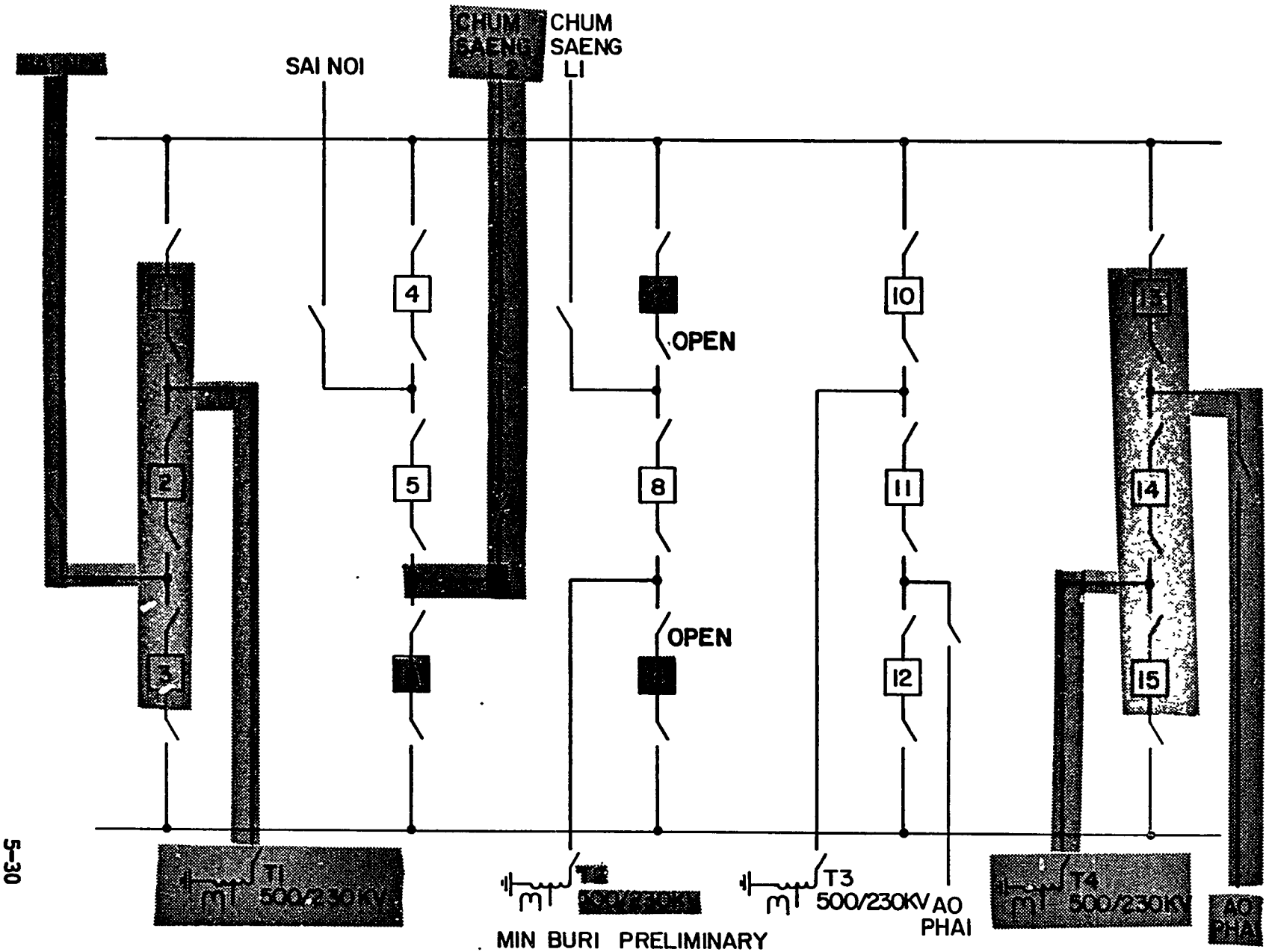

MIN BURI PRELIMINARY
ONE LINE DIAGRAM 500KV
230/2 ALTERNATE 1988
AO PHAI AND MAE MOH PROJECTS

FIGURE 5.2-6.3

155

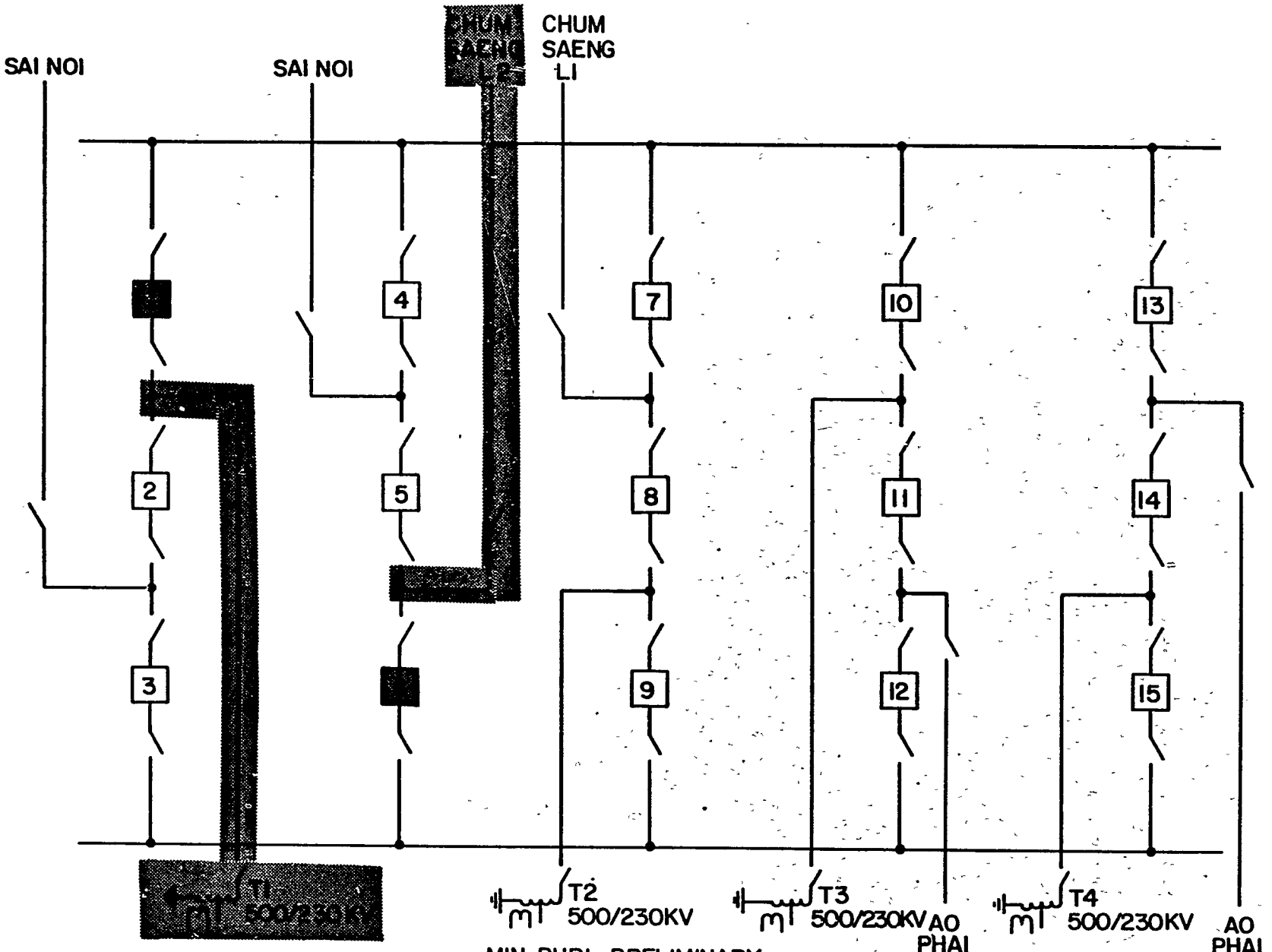

MIN BURI PRELIMINARY
ONE LINE DIAGRAM 500KV
230/2 ALTERNATE, 1991
MAE MOH PROJECT

FIGURE 5.2-6.4

156

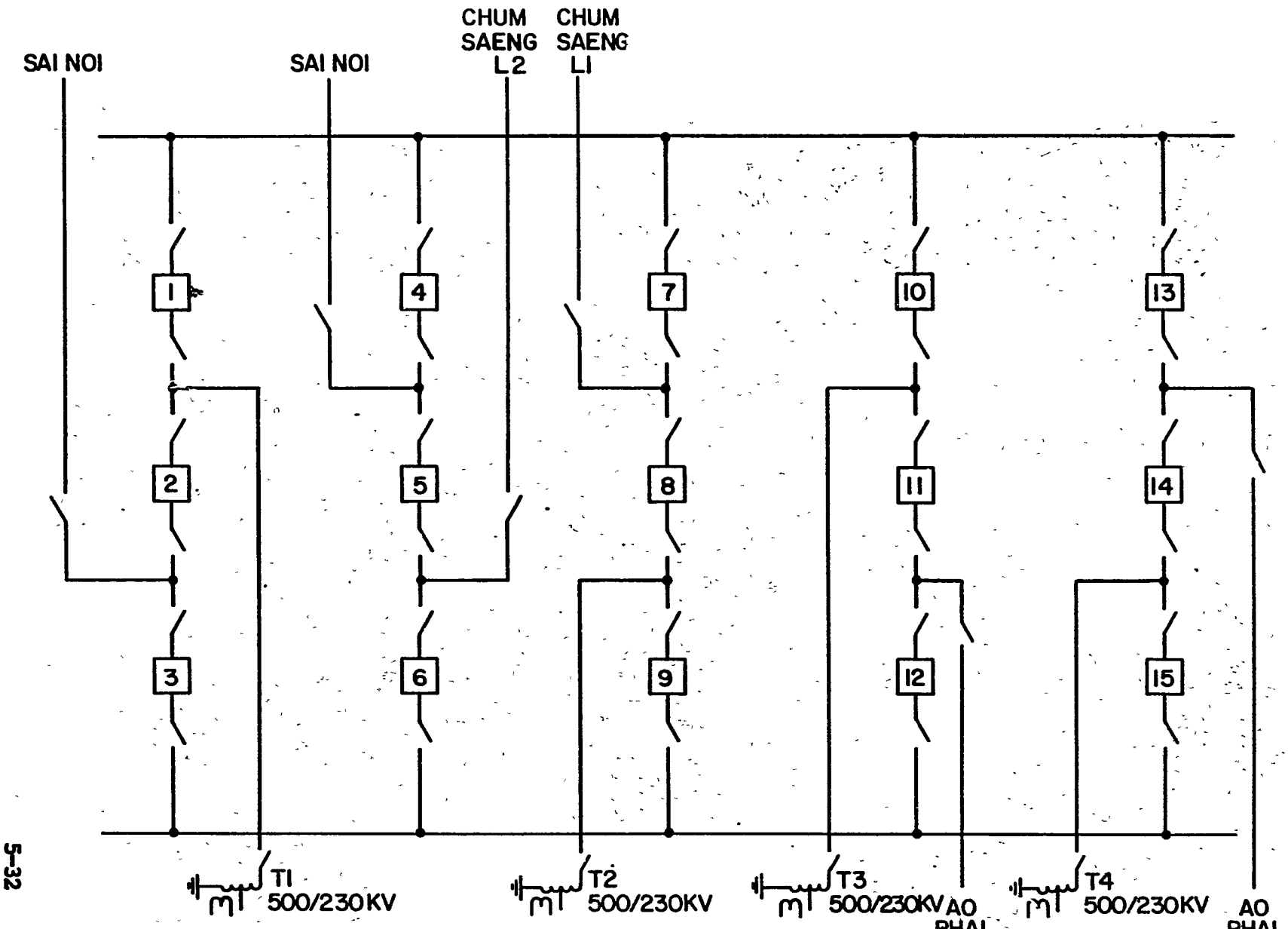

MIN BURI PRELIMINARY
ONE LINE DIAGRAM 500KV
230/2 ALTERNATE 1993
MAE MOH AND AO PHAI PROJECT

FIGURE 5.2 -6.5

157.

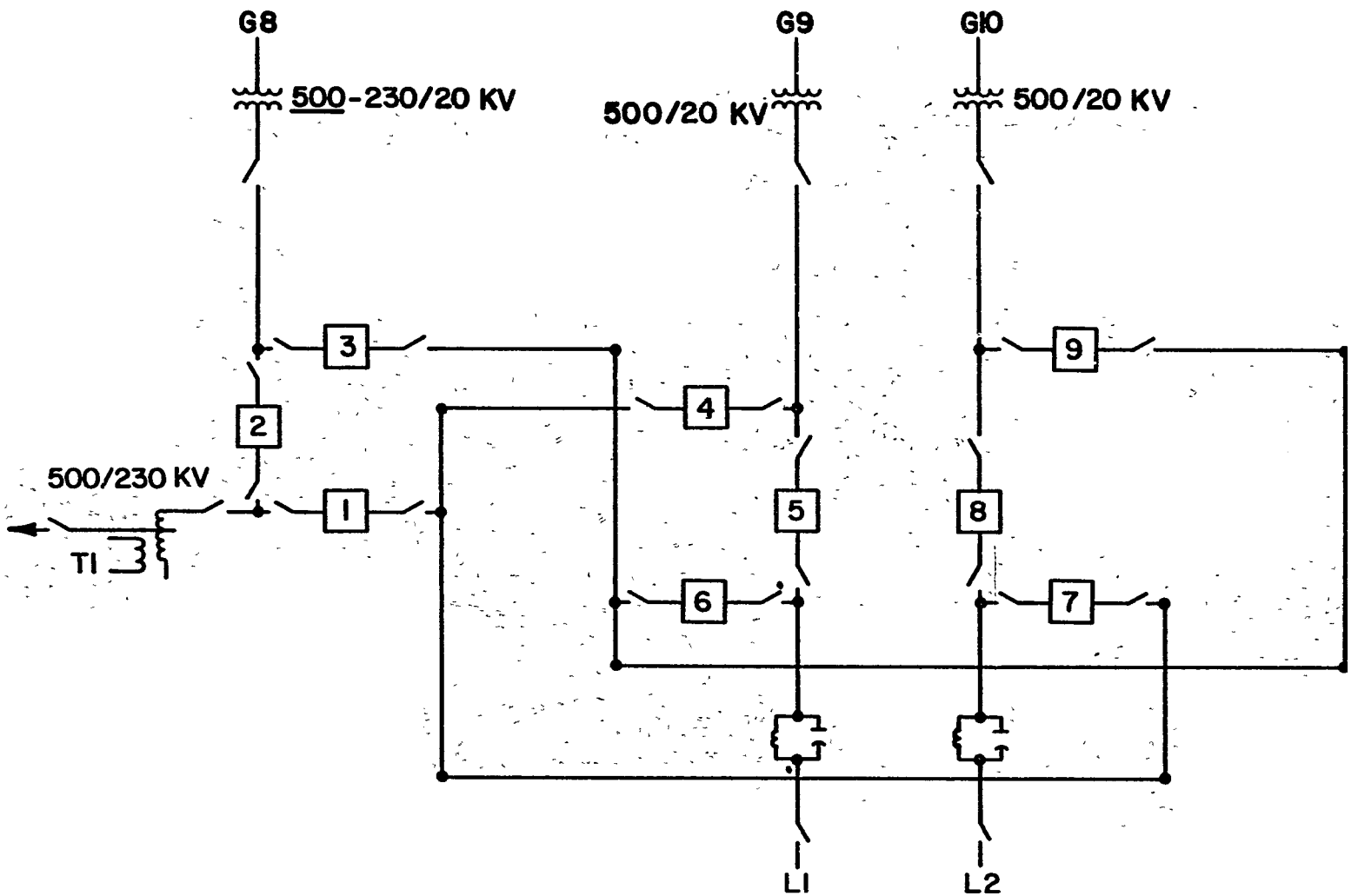

MAE MOH PRELIMINARY
ONE LINE DIAGRAM 500 KV
230/1,1992

FIGURE 5.2-7.1

158

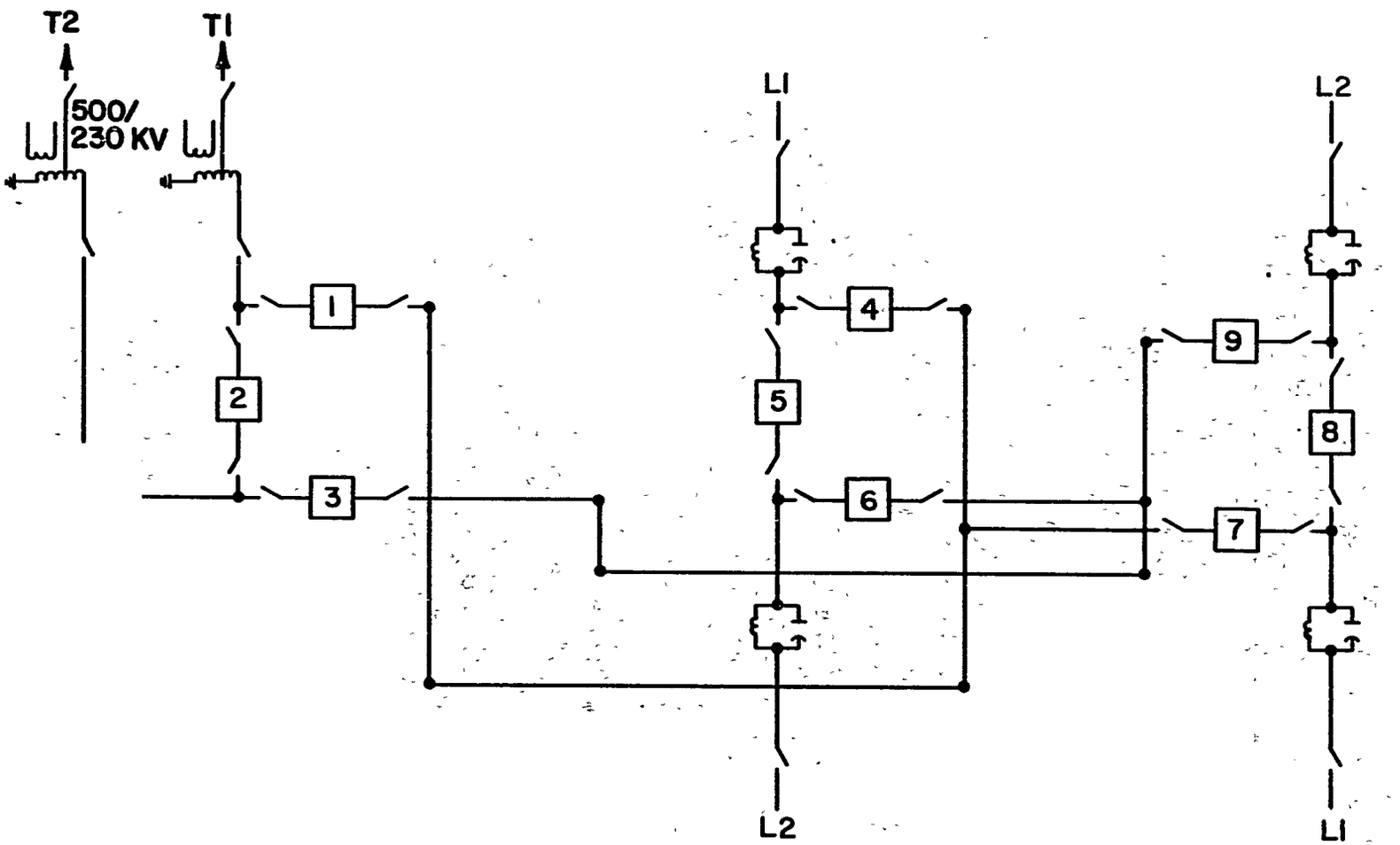

CHUM SAENG PRELIMINARY
ONE LINE DIAGRAM 500KV
230/1 ALTERNATE, 1993

FIGURE 5.2-8.1

159

The application of shunt reactors to compensate for a portion of the charging current is widely used in design of EHV systems.

5.4.1 Typical Installation Practices

A typical installation for shunt reactors contains the following:

- Reactor bank (3-phase);
- Switching device capable of energizing and de-energizing the reactors;
- Surge protective devices (surge arresters).

The following is the most widely recommended practice in terms of connecting shunt reactors to the system:

- EHV reactors required for the maximum line loadings are permanently connected to the transmission line using motor operated disconnect switches and therefore will be switched with the line.

- The additional compensation required between maximum and minimum line loadings is normally located on the EHV transformer tertiary winding. The tertiary reactors are normally dry-type reactors and are switched in MVAR blocks, as required, by inexpensive neutral breakers (located at the ground end of reactors).

5.4.2 Reactor Switching

It should be understood that the size of reactors connected to the transformer tertiary is limited by the transformer rating (tertiary is usually rated at 35% of transformer MVA rating). Therefore, for cases when the difference between the shunt reactor requirements for maximum and minimum loads exceeds the rating of the transformer tertiary, it becomes feasible to have EHV reactors connected to the line using circuit switchers or load interrupters which are capable of switching the reactors on and off depending on the line loading. These types of switching devices are significantly cheaper than the appropriate circuit breakers because they do not have a fault current interrupting capability. Fault protection for the reactor installation is provided by line circuit breakers.

Another way to avoid any problems associated with reactor switching is to install shunt reactors which provide acceptable voltages under normal operating conditions but which increase the amount of compensation under low load conditions. This could be accomplished by using reactors with a well-defined knee in the saturation curve and with the slope of the curve lower in the saturated range than in the unsaturated range. However, it is possible that non-linear type of shunt reactors could cause significant non-linear oscillations, especially if it is used in conjunction with the series capacitors. Another disadvantage of using non-linear shunt reactors is their relatively high price. Thus, at this point they are not recommended for the Mae-Moh Project.

In addition, it should be mentioned that in recent years some efforts have been made to suppress ground fault current during single pole switching operations by using different types of shunt reactor installations (four-legged reactor bank, modified four-legged reactor bank, etc.).

However, the final recommendations on the shunt reactors could be made only after additional TNA, load flow and comparative economic studies are done.

5.5 PROTECTIVE RELAY SYSTEM DESCRIPTION

5.5.1 Line Relaying

The importance of a 500 kV transmission system dictates the optimizing of the protective relaying system. The relaying should be flexible and optimize speed, dependability, and security. State of the art static relays provide the best relaying available for optimizing the protection. They can permit the use of single pole trip and reclose schemes if they become desirable, and they can be used with series capacitors if series compensation ever becomes needed. Recommendations for the line relaying scheme are:

(1) Two primary static relay systems. This greatly improves the dependability, and most importantly provides a big operating advantage in being able to take one system out for maintenance and still have complete protection.

The first system should be used with a power line carrier pilot channel. This could be either a directional comparison scheme or a phase comparison scheme.

161

With the first system using a power line carrier pilot channel, the most ideal set up would be to use the second system with a microwave pilot channel. This would provide a completely separate communication path. However, since it appears that a microwave system may not be installed initially at all terminals, the second system could also be used with a power line carrier pilot channel.

The use of relay systems with different operating principles can improve the dependability. Therefore unless security would be degraded, equipment costs turn out to be too high, costs of spare parts appears too high, or the desire to become familiar with just one type of relay turns out to be a big factor, the second primary system will be selected from a different manufacturer than the first system.

A complete set of spare parts will be ordered with each system. The final selection of the two primary systems will be made after evaluating proposals from different manufacturers. Two relay systems that could be used are a segregated phase comparison scheme with a single sideband unit on power line carrier, and a directional comparison blocking scheme with a frequency shift unblocking power line carrier channel.

(2) One set of electro-mechanical relays will be used in a backup mode.

The backup relays will include two zone phase distance relays and a directional ground overcurrent relay. This provides remote backup and relays that are not affected by the operation of a channel.

(3) Out-of-step relaying will be provided on each line section. The line relays will be blocked from operating on stable power swings.

(4) In addition to a bi-directional relay channel for each primary relay system, dual bi-directional transfer trip channels will be used with each relay system. This will provide transfer tripping for line reactor faults, breaker failure, and the opening of breakers at either end of a line.

The dual bi-directional transfer trip channels can share two channels with the primary relays to conserve power line carrier frequency spectrum. This means that a minimum of four power line carrier channels will be needed with each system.

(5) The relay supplier of the primary relay systems will be required to demonstrate the response of the relays on a model power system which can adequately model the system. This will provide the opportunity to see how the relays respond to all types of faults and fault locations. This will also help verify relay settings and that the relays are operable before they are shipped.

(6) Current is supplied to the relays and meters from multi-ratio current transformers. They may be contained either in the power circuit breaker bushings or in a separate current transformers per phase associated with each power circuit breaker.

(7) Potential is supplied to the relays and meters from coupling capacitor voltage transformers located on the line side of the power breaker.

(8) Each circuit breaker will be equipped with dual trip coils. Each relay system will energize both trip coils. Thus when either system is out of service, both trip coils will still be energized. Each trip coil will be off of a separate 125 VDC battery.

Each relay system will operate off of a separate 48 VDC battery. This isolates the relay power supply from the circuit breaker tripping battery and improves dependability by providing each relay system with its own battery.

5.5.2 Breaker Failure Relaying

All power circuit breakers will be provided with local breaker failure relaying. A timer and overcurrent fault detector unit will be incorporated in the same relay. The breaker failure relay will be initiated by any protective relay operation that should trip that breaker. That breaker failure scheme will isolate the fault by tripping all adjacent breakers and transfer tripping any remote terminals. Reclosing will not be initiated if the breaker failure relay operates.

5.5.3 Reclosing

High speed single shot reclosing will be used. Proper reclosing can help the operation of the power system by reducing the possibility of multiple outages. It would be best to use sequential reclosing where one breaker at the line terminal farthest from the generating bus is reclosed at high speed (after a .5 second deionizing

163

time delay) and the remaining terminal and local breaker reclosed through a synch check relay upon a successful high speed reclosure. This will reduce stresses on the generators produced by closing into a fault. Successful reclosing can help stability while the sequential reclosing scheme reduces stability problems caused by closing into a fault. Reclosing will be blocked for three phase faults.

It may become desirable to use a single pole trip and reclose scheme to improve system stabiity. The primary relay systems will be selected with this in mind.

5.5.4 Bus Protection

Two sets of bus differential relays are recommended for all 500 kV buses. The most favorable is high impedance differential relays combining both voltage and current sensitive elements. These relays are secure from operation on an external fault with current transformer saturation and are dependable for internal faults even with a high degree of current transformer saturation.

Bus differential relays will operate a lockout relay which will initiate tripping of all breakers adjacent to the bus.

5.5.5 Transformer Protection

Two sets of percentage differential relays with harmonic restraint should be used for transformer protection. Harmonic restraint will prevent relay operation on in-rush current with very little reduction in sensitivity for internal faults. Any delta connected tertiary windings will also be included in the differential zone.

All transformers will be equipped with sudden pressure relays for incipient type fault detection. The type of sudden pressure relay will be dependent on the type of transformer purchased.

Transformer winding hot spot and top oil temperature will also be detected. The winding hot spot will trip the transformer breakers.

Additional transformer overload and fault backup will be provided by three phase time overcurrent relays and one ground time overcurrent relay.

The differential, sudden pressure, and winding hot spot relays will operate lockout relays to isolate the fault.

5.5.6 Annunciator and Sequence of Events System

An electronic annunciator providing visual and audible signalization for the most important abnormal situations such as line and equipment faults, loss of certain relaying systems, loss of protection channels, loss of auxiliary power supply circuits for breakers and relays, etc., is recommended for use at each 500 kV substation.

We also recommend EGAT consider a sequence of events (SOE) or fault recording system to be installed at each 500 kV substation.

5.5.7 Local Metering

In order to make final recommendations on local metering, it would be necessary to have complete knowledge of all metering types, principles and standards that have been used by EGAT in the past.

However, recommended indicating metering will include, but will not be limited to:

- line WATT-, VAR-, VOLT-, and AMMETERS;
- bus voltmeters;
- transformer high side voltmeter;
- transformer load tap-changer position indicator;
- transformer low side WATT-, VAR- and VOLTMETER, etc.
- individual breaker ammeters

In addition to the above metering, major equipment (transformers and breakers) will have their own pressure and temperature metering devices.

5.5.8 Supervisory Control and Data Acquisition (SCADA)

Very close coordination with the existing supervisory control and data acquisition system currently being used by EGAT is necessary to integrate all 500 kV substations into the centralized SCADA system.

165

Remote terminal units should be installed at each 500 kV substation and data will be transmitted between a central dispatching center and 500 kV substation via power line carrier or microwave channels. Solid-state transducers will provide analog inputs into the SCADA system.

Closure or opening of relay, control switch and breaker auxiliary switch contacts will provide status/indicating inputs.

The following SCADA control outputs are recommended:

- power circuit breaker control (trip/close)
- transformer load tap-changer control (raise/lower;manual/auto; etc.)

5.6 PRELIMINARY DESIGNS - COMMUNICATIONS SYSTEM

5.6.1 General

In order to properly evaluate and select the communications system for the Mae Moh - Bangkok 500 kV Transmission System, it is necessary to define the choices available. The requirements for any communication system for this project are the same, that is to provide voice communications, telemetering, protective relaying and supervisory control on a reliable basis for each 500 kV line section.

At the present time there are three methods available from which to choose:

- Microwave Radio
- Power Line Carrier
- Pilot Wire

The selection of the proper system must take into account the distance between stations, the availability of power along the way, type of terrain, accessibility to equipment and reliability of the equipment in its present "state of the art" form. In addition to this, consideration must be given to the future requirements of the 500 kV transmission system in general. In the preparation of this recommendation, generator control has not been considered; however, it could be included as part of any final system design.

Finally, the most important consideration is the reliability of the communications system. Since the two Mae Moh - Bangkok single circuit 500 kV transmission lines will be a vital part of the transmission system, a communications system of the highest reliability that is commensurate with sound economic practice is essential.

5.6.2 Existing Conditions

The present EGAT communications system is defined in their Report No. 844-2306 dated February 1980 by the System Planning Division, Planning Department, entitled Mae Moh - Bangkok EHV Transmission Project, (Data for Feasibility Study) (Reference 1). While this report shows that there are UHF links between Bangkok and Mae Moh, it does not show any links between Bangkok and Chum Saeng or between Chum Saeng and Mae Moh.

The route profile map in the EGAT report listed above shows that while most of the route is relatively flat there is a mountainous region between Min Buri and Chum Saeng and a very considerable mountain range between Chum Saeng and Mae Moh.

The availability of power in the general area of any proposed microwave link in the Min Buri-Chum Saeng-Mae Moh Corridor is considered to be adequate should this become a possiblity for a communications system.

5.6.3 System Comparisons

For the purpose of this report, the pilot wire system can be eliminated as it is primarily used for short distances and is subject to failure in adverse weather conditions. This leaves microwave and power line carrier, either one of which would be satisfactory for the proposed transmission lines and substations.

167

5.6.3.1 Microwave

Microwave is used on many electric power companies systems in the United States. It is a reliable system with the following advantages and disadvantages:

Advantages

- capability of handling heavy traffic
- operation is unaffected by power line outages
- a wide band of frequencies are available
- signal is not influenced by the power line

Disadvantages

- Repeater stations are required on the average of every 25 miles
- access roads would be very costly in the mountainous terrain
- not very economical if traffic density is low
- requires a source of nearby power or on-site generation

5.6.3.2 Power Line Carrier

Power Line Carrier is the most widely used communication system employed by electric power companies in the United States. It is also a reliable system and has the following advantages and disadvantages:

Advantages

- low maintenance cost with equipment at accessible locations
- capable of transmission over long distances without repeaters

.. low susceptibility to outages due to weather

.. most economical for transmission of small number of channels

.. no need for purchase of additional site locations

Disadvantages

.. limited number of channels could make integration into large system difficult in the future

.. susceptibility to power line noise

.. susceptibility to interference from other carriers, radio stations and low frequency aircraft guidance systems

In order to make an accurate economic comparison of the two systems it would be necessary to have complete knowledge of all site locations for the microwave system; however, suffice it to say that it is apparent that the microwave system would have a much larger installed cost than the power line carrier system.

5.6.4 Recommendations & Conclusions

With due consideration of all the preceeding, plus the information provided by the Electricity Generating Authority of Thailand and Bonneville Power Administration, we recommend the use of single side band power line carrier for the communications system.

For the 500 kV two circuit line under consideration, the power line carrier system will be adequate. It is apparent that the carrier system will also be the most economical system that could be installed at the present time. As the system grows however, it would be well to consider the establishment of a microwave link between the three substations. Microwave could then be used as the primary system while the carrier system which would be installed could be used as a backup system.

5.6.5 System Operation

The power line carrier system will consist of transmitters/receivers on each power line at both Mae Moh and Min Buri. At Chum Saeng there will be transmitters and receivers on both the

169

incoming and outgoing lines with repeaters on Line 1 and Line 2 to allow transmission of voice and data directly between Mae Moh and Min Buri. The carrier system will accomplish the following:

- Protective relaying for each line section
- Supervisory control of the substations at Min Buri, Chum Saeng and Mae Moh
- Telemetering of KW and KVAR from Mae Moh to Min Buri
- Voice communication between all three substations
- Equipment status indication from all three substations

The most efficient coupling scheme for power line carrier coupling is three-phase coupling. However, with two transmission lines a very reliale system can be set up with phase-to-phase coupling on each line by doing the following:

(1) Primary Relay and Transfer Trip System 1 on Line 1 will use power line carrier channels on Line 1.

(2) Primary Relay and Transfer Trip System 2 on Line 1 will use power line carrier channels on Line 2.

(3) Primary Relay and Transfer Trip Systems on Line 2 will work in a similar manner.

An elementary block diagram of the communications system for one line only is shown in Figure 5.6-1.

Voice and telemetering are used with a single sideband system. A relay and transfer trip system from the other line (as described above) will also use this single sideband system. The other relay and transfer trip system will be coupled separately from the single sideband equipment.

170

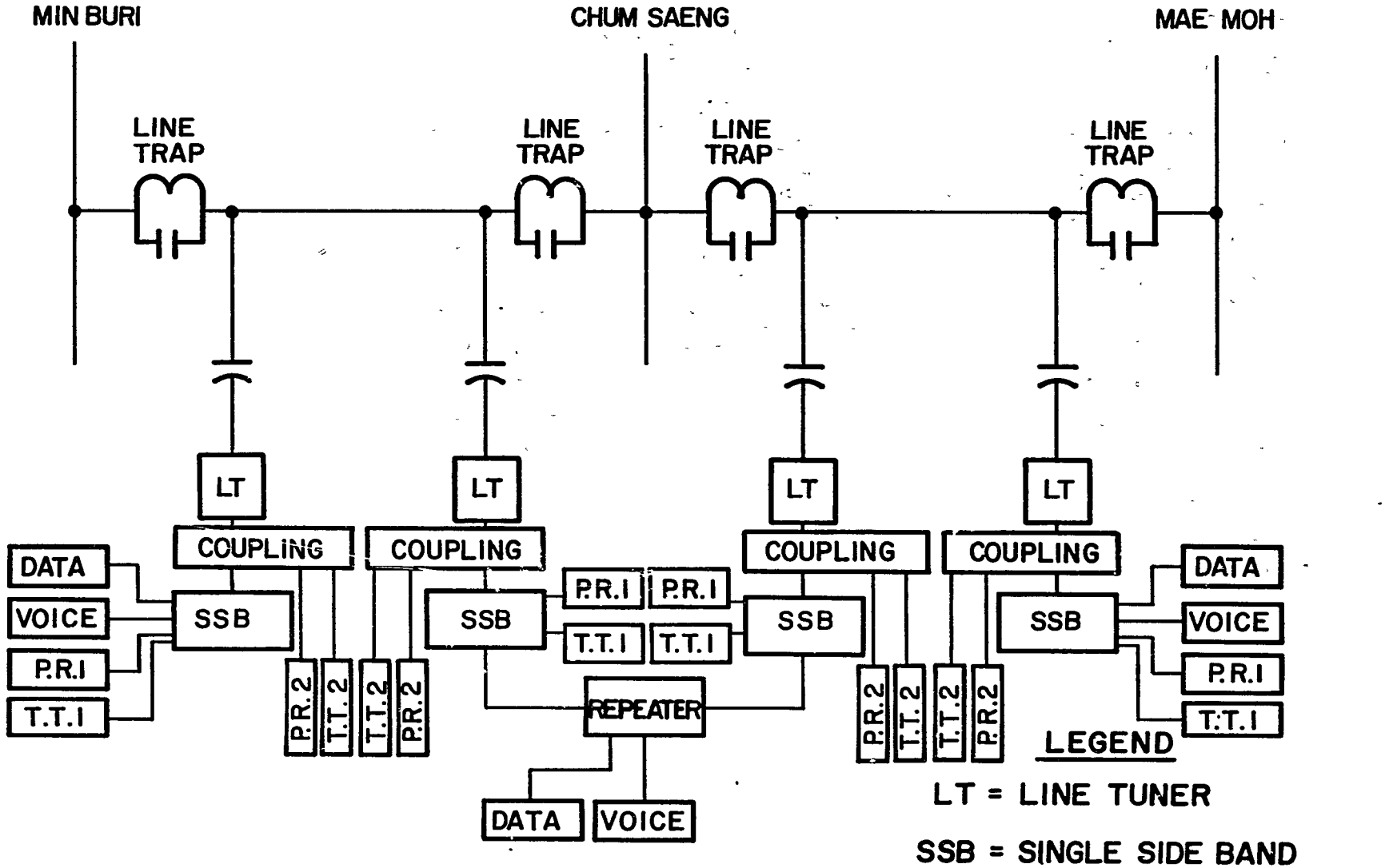

LEGEND

LT = LINE TUNER

SSB = SINGLE SIDE BAND TRANSMITTER/RECEIVER

P.R. = PROTECTIVE RELAYING

T.T. = TRANSFER TRIP

FIGURE 5.6-1

6.0 SYSTEM ECONOMIC ANALYSIS

This section includes the criteria, assumptions and findings we have utilized for our system economic studies.

6.1 SYSTEM GENERATION SCHEDULE

As provided in the EGAT Power Development Plan (1980-1993) of December 1980, (Reference 2), EGAT has scheduled Mae Moh generation as shown in Table 6-1.

TABLE 6-1

MAE MOH GENERATION SCHEDULE

UNIT NUMBER	RATING NW	TOTAL TO DATE MW	COMMISSIONING DATE
6	150	675	AUG 1986
7	150	825	DEC 1986
8	300	1125	AUG 1987
9	300	1425	OCT 1991
10	300	1725	APR 1992

EGAT has also scheduled 4-600 MW units at Ao Phai on the following schedule:

- March 1988
- October 1989
- October 1992
- April 1993

The Ing Yom Project is currently scheduled to bring its units in-service as follows:

1 x 70 MW	1 x 80 MW	1990
3 x 70 MW	3 x 80 MW	1993

172

6.2 SYSTEM COST COMPONENTS

We have utilized load flow and stability modeling to predict the transmission facilities required to support these generation schedules and have scheduled construction of these transmission facilities accordingly.

We have provided cost estimates for each transmission facility required to support the Mae Moh generation schedule. The facilities include the cost of transmission lines, substations and reactive compensation.

Utilizing the estimated cost of each system component and estimating its cost in each year of construction we have determined a cash flow necessary to support the planned schedule.

6.3 ALTERNATIVE TRANSMISSION SYSTEMS

As directed by EGAT in its transmittal of March 1981 (Reference 5), EGAT wishes the study to consider the possibility of constructing portions of the transmission system for initial operation at 230 kV with later conversion to 500 kV.

6.3.1 500 kV Transmission System

Our base case for the previous study had indicated the base transmission system would ultimately consist of three 500 kV substations at Mae Moh, Chum Saeng and Min Buri. These substations would ultimately be interconnected with two 550 kM, 500 kV transmission lines. This study has also confirmed this configuration and has determined that this should be the system in 1993 and thereafter. The 500 kV transmission facility should be constructed as shown in Table 6-2.

TABLE 6-2

500 kV MAE MOH TRANSMISSION FACILITY SCHEDULE

IN SERVICE	FACILITY	WITH MAE MOH UNIT	UNIT COMMISSIONING DATE
1986	Mae Moh-Chum Saeng Line 1	7	DECEMBER 1986
1987	Mae Moh-Chum Saeng Line 2	8	AUGUST 1987
1988	Chum Saeng-Min Buri Line 1	N/A	N/A
1991	———	9	OCTOBER 1991
1992	———	10	APRIL 1992
1993	Chum Saeng-Min Buri Line 2	N/A	N/A

6.3.2 Alternative 230 kV Transmission Systems

We have conceived and modeled two alternative 230 kV transmission systems which require constructing substation facilities at Mae Moh, Chum Saeng and ultimately Min Buri. These substations would be interconnected with transmission lines which could be constructed at 500 kV but initially operated at 230 kV.

The basic difference between the 230 kV alternatives is as follows:

- Incorporated in the 230/1 ALTERNATE, the Mae Moh Unit main step-up transformer would be specified and purchased for initial operation at 230 kV with later conversion for operation at 500 kV.

- The ALTERNATE we have developed and designated 230/2 would utilize a 500/230 kV, 400 MVA autotransformer to interconnect the 230 kV bus serving Units 4, 5, 6 and 7, and the 500 kV bus serving Units 8, 9 and 10. The main step-up transformers for Units 8-10 would be conventional 500 kV step-up transformers.

174

In each case the transmission lines interconnecting Mae Moh, Chum Saeng and Min Buri would operate at 230 kV between appropriate 230 kV bus terminals at each of these locations. Table 6-3 indicates the Transmission Facility Schedule on which either of these alternative transmission systems could operate.

TABLE 6-3

230 kV ALTERNATE TRANSMISSION FACILITY SCHEDULE

FACILITY COMMISSIONING DATE	TRANSMISSION FACILITY	CONCURRENT WITH MAE MOH UNIT	MAE MOH UNIT COMMISSIONING DATE
1986	Mae Moh-Chum Saeng Line 1	7	DECEMBER 1986
1987	Mae Moh-Chum Saeng Line 2	8	AUGUST 1987
1988	Chum Saeng-Min Buri Line 1	-	---
1991	Chum Saeng-Min Buri Line 2	9	OCTOBER 1991
1992	Conversion to 500 kV	10	APRIL 1992

Either of the 230 kV alternatives proposed would require conversion to operate at 500 kV concurrent with the commissioning of Mae Moh Unit 10.

We have estimated the capital cost as well as the present worth of each of these alternative 230 kV arrangements and have determined that scheme 230/2, utilizing the 500/230 kV autotransformer, offers certain advantages as indicated in Table 6-4.

TABLE 6-4

ALTERNATIVE 230 kV TRANSMISSION FACILITY
COST EVALUATION
(1980 Million Baht)

ARRANGEMENT	TOTAL COST	1980 (10%) PRESENT WORTH
230/1	6193.7	3756.4
230/2	6137.6	3744.0

175

6.3.3 Alternative System Evaluation

Our cost estimates for the 230 kV alternative have considered equipment and facilities which will be required when the system is operated at 230 kV and appropriate credits have been given for this equipment when it must be removed for conversion to 500 kV.

Other factors which affect the alternative cost include:

- losses are higher for the 230 kV alternatives
- substation O & M is lower for the 230 kV alternatives
- capital cost for the 230 kV alternative are higher but cost disbursements are later than for the 500 kV initial system

Since alternative 230 kV arrangement 230/1 is demonstrated to be the less desirable 230 kV alternative 230/2, we will only consider alternative 230/2 further.

Then we compared 500 kV alternative with the 230 kV alternative based on conversion to 500 kV in 1991, since it has been proven (See Section 3), that 230 kV system becomes technically unacceptable in 1991.

Although alternates 230/1 and 230/2 were compared based on conversion to 500 kv in 1992, revising this conversion to 1991 would not affect the comparison, since capital costs, losses, and operations and maintenance expenses would be equally affected in either alternate. Also the postponement of the second line from Chum Saeng to Min Buri was not reflected in the 230 kV alternates comparison; however, it would not affect the comparative results. A new 230/2 cost stream was calculated based on the above system revisions for additional comparison to other alternative systems.

We will, therefore, subject the new 230 kV alternative with conversion to 500 kV in 1991 to cost stream analysis against the alternative of constructing and operating the transmission system at 500 kV initially.

6.4 COST STREAM ANALYSIS

We have prepared cost stream analysis of each alternative studied and have predicted the 1980 present value for each alternative. We have utilized the instructions provided by EGAT (See Appendix 3, Conference Report dated September 22, 1981) in formulating this cost stream.

6.4.1 Substation Cost Disbursements

We have prededicted the cost of the substations and utilized the following cash flow for construction of a substation at a new site (Table 6-5).

TABLE 6-5

SUBSTATION COST DISBURSEMENTS
NEW SITE

	YEAR					
	1	2	3	4	5	6
Percentage of Substation Cost	1%	4%	30%	47%	13%	5%

For substation construction which is a major expansion on an existing site we have utilized a four year cash flow similar to that shown in Table 6-6.

TABLE 6-6

SUBSTATION COST DISBURSEMENTS
EXISTING SITE

	YEAR			
	1	2	3	4
Percentage of Substation Cost	3%	7%	50%	40%

177

6.4.2 Transmission Line Cost Disbursements

We have utilized the cost disbursement schedule shown in Table 6-7 to predict the cash flow for each transmission line required.

TABLE 6-7

TRANSMISSION LINE COST DISBURSEMENTS

	YEAR					
	1	2	3	4	5	6
Percentage of Transmission Line Cost	1%	5%	20%	40%	30%	4%

6.4.3 System Economic Life

As directed by EGAT, we have assumed the economic life of components within the system at 40 years for transmission lines and 25 years for substations. Accordingly at the end of the 25 years of the cost stream, we have credited the system with the remaining value of its transmission lines.

6.4.4 Estimates of Operations and Maintenance Costs

We have assigned annual cost for operation and maintenance of the systems based on EGAT's demonstrated cost for maintenance of their existing 230 kV system and relative BPA estimates of O&M cost on their 500 kV system.

6.4.5 System Loss Estimates

System losses for peak generation and peak load have been predicted by our load flow studies for each alternative system and for each year of study.

We have prepared cost for system losses based on the incremental peak losses of each alternative system. During the years in which alternatives exists, 1986 through 1990, we found the 500 kV alternative exhibits the lowest losses and therefore we have computed relative incremental losses for the alternative system.

178

We have assigned a cost of peak losses at Bahts 1690/KW year as a capacity charge.

We have assumed a plant availability of 76% for the Mae Moh installation and have predicted a loss factor as follows:

$$\text{Loss Factor} = 0.20\ (76\%) \times 0.80\ (76\%)^2$$

We have assigned a charge of 0.852 Bahts/KWH for energy losses thus computed.

6.5 COST STREAM CALCULATIONS

We have compiled all data for each system in each year of consideration (1981 through 2011).

Values for capital investment, operations and maintenance, salvage, and capacity and energy losses were computed for each system based on the sequential development of each alternative. Cost streams for each alternative were identical in 1992 inasmuch as the 230 kV alternative should be converted tc 500 kV in 1991.

Table 2-1 in Appendix 2 shows the formulation of each cost stream for each of the alternatives.

6.5.1 Results of the Cost Stream Analysis

The calculation of the present value of each of the alternative systems cost streams is shown in Table 6-8.

179

TABLE 6-8

1980 PRESENT VALUE OF ALTERNATIVE TRANSMISSION SYSTEMS

1980 BAHTS X 1,000,000

DISCOUNT RATE	INITIAL 500 kV	INITIAL 230 kV
8%	3895.1	3993.6
10%	3539.9	3583.5
12%	3214.8	3216.3

As can be seen from this table, the 500 kV system when constructed and operated at 500 kV for its entire life exhibits the lowest present worth on its cost stream of any other alternative system.

180

7.0 COST ESTIMATES AND ANNUAL OBLIGATIONS

7.1 COST ESTIMATES

The transmission system recommended for the Mae Moh-Bangkok Transmission System consists of two 550 KM, 500 kV transmission lines and three 500 kV substations.

Our estimate for the cost (1980) for the system to serve Mae Moh Generating Units 6-10 is 6207 Million Bahts.

This estimate is based on two single circuit 500 kV transmission lines interconnecting Mae Moh, Chum Saeng and Min Buri. This estimate does not include any other 230 kV facilities except the 500/230 kV autotransformer and terminations at these locations. It does not include any 230 kV transmission lines to interconnect these facilities with the existing system. It does however, include the cost of generator step-up transformers for Units 8-10 at Mae Moh.

7.1.1 Summary of Cost

All cost are million Bahts (1980) and do not include IDC:

Mae Moh 500 kV Substation.....	737.7
Chum Saeng 500 kV Substation	720.0
Min Buri.....	286.8
2 single circuit 500 kV lines MM-CS-MB..	4405.6

Although the Min Buri Substation will be constructed to accommodate the transmission interface to serve the Ao Phai Coal Generating Plant we have included the initial site development cost herein, including land and land improvements. We have only included a proportional part of the other equipment and facility cost for Min Buri in this Mae Moh Project Estimate.

The details of these estimates are included in the following tables and include the cost of these facilities through the commissioning of Mae Moh Unit 10 in April 1992, and final completion of the 500 kV transmission system in 1993.

181

TABLE 7-1

MAE MOH-BANGKOK EHV TRANSMISSION PROJECT
MAE MOH SUBSTATION COST ESTIMATES FOR 500 kV

	DESCRIPTION	F.C.	L.C.	TOTAL
1.	Steel Structures	4.8	1.0	5.8
2.	Misc. Hardware & Equipment	28.2	9.4	37.6
3.	Power Circuit Breakers	76.3	20.6	96.9
4.	Disconnect Switches	15.4	4.6	20.0
5.	Main Control Boards, Equipment & Communications	9.4	2.8	12.2
6.	Power & Control Cable	4.4	1.3	5.7
7.	Foundations	0	12.6	12.6
8.	Substation Transformer	68.3	4.9	73.2
9.	Generator Transformer	187.5	13.2	200.7
10.	Miscellaneous Facilities	0	4.6	4.6
11.	Land	0	0	0
12.	Land Improvement	0	1.7	1.7
13.	Miscellaneous Expenses	13.8	5.9	19.7
14.	Bus Reactors	80.1	5.7	85.8
15.	230 kV Terminals	7.7	3.9	11.6
	SUBTOTAL DIRECT COST	495.9	92.2	588.1
16.	Engineering & Supervision	0	41.2	41.2
17.	Contingencies	49.6	9.2	58.8
18.	Import Duties	0	49.6	49.6
	TOTAL COST	545.5	192.2	737.7

ALL COSTS IN 1980 MILLION BAHTS (MB)

182

TABLE 7-2

MAE MOH-BANGKOK EHV TRANSMISSION PROJECT
CHUM SAENG SUBSTATION COST ESTIMATES FOR 500 kV

	DESCRIPTION	F.C.	L.C.	TOTAL
1.	Steel Structures	5.7	1.2	6.9
2.	Misc. Hardware & Equipment	26.7	8.1	34.8
3.	Power Circuit Breakers	76.5	20.7	97.2
4.	Disconnect Switches	15.6	4.8	20.4
5.	Main Control Boards, Equipment & Communications	8.6	2.3	10.9
6.	Power & Control Cable	1.7	0.5	2.2
7.	Foundations	0	8.9	8.9
8.	Substation Transformer	204.9	14.7	219.6
	(Credit-Transformer)	(54.6)		(54.6)
9.	Generator Transformer	0	0	0
10.	Miscellaneous Facilities	0	4.4	4.4
11.	Land	0	2.1	2.1
12.	Land Improvement	0	5.1	5.1
13.	Miscellaneous Expenses	14.4	6.0	20.4
14.	Bus Reactors	141.7	10.0	151.7
15.	230 kV Terminals	23.1	11.7	34.8
	(Credit - 230 kV PCB's)	(2.1)	0	(2.1)*
	SUBTOTAL DIRECT COST	518.9	100.5	619.4
	SUBTOTAL-CREDITS	(56.7)		(56.7)
16.	Engineering & Supervision	0	43.4	43.4
17.	Contingencies	51.9	10.1	62.0
18.	Import Duties	0	51.9	51.9
	TOTAL COST	514.1	205.9	720.0*

*Indicates credit for equipment installed 1988 & removed in 1993

ALL COSTS IN 1980 MILLION BAHTS (MB)

183

TABLE 7-3

MAE MOH-BANGKOK EHV TRANSMISSION PROJECT

MIN BURI SUBSTATION COST ESTIMATES FOR 500 kV

	DESCRIPTION	F.C.	L.C.	TOTAL
1.	Steel Structures	2.5	0.5	3.0
2.	Misc. Hardware Equipment	13.6	4.1	17.7
3.	Power Circuit Breakers	25.5	6.9	32.4
4.	Disconnect Switches	9.8	3.0	12.8
5.	Main Control Boards, Equipment & Communications	5.3	1.4	6.7
6.	Power & Control Cable	1.8	0.6	2.4
7.	Foundations	0	13.4	13.4
8.	Substation Transformer	68.3	4.9	73.2
9.	Generator Transformer	0	0	0
10.	Miscellaneous Facilities	0	2.8	2.8
11.	Land	0	4.5	4.5
12.	Land Improvement	0	4.6	4.6
13.	Miscellaneous Expenses	5.8	3.2	9.0
14.	Bus Reactors	33.8	2.4	36.2
15.	230 kV Terminals	7.7	3.9	11.6
	SUBTOTAL DIRECT COST	174.1	56.2	230.3
16.	Engineering & Supervision	0	16.1	16.1
17.	Contingencies	17.4	5.6	23.0
18.	Import Duties	0	17.4	17.4
	TOTAL COST	171.5	95.3	286.8

ALL COSTS IN 1980 MILLION BAHTS (MB)

184

TABLE 7-4

COST ESTIMATE FOR 2 SINGLE CIRCUIT 500 kV LINES - 550 KM LONG

	DESCRIPTION	F. C.	L. C.	TOTAL
1.	Preliminary Work	—	52.1	52.1
2.	Tower Foundation	—	396.6	396.6
3.	Towers	385.	82.5	467.5
4.	Conductor & Overhead Ground Wire	386.1	55.6	441.7
5.	Insulators & Hardware	115.5	3.9	119.4
6.	Grounding Materials	6.6	4.4	11.
7.	Right-of-Way, Purchase	—	121.	121.
8.	Misc. Expenses (10%)	89.1	71.5	160.6
	SUBTOTAL DIRECT COST	982.3	787.6	1769.9
9.	Engineering & Supervision (7.5%)	—	132.6	132.6
10.	Contingencies (10%)	98.4	91.9	190.3
	TOTAL W/O ESCAL, IMPORT DUTY & IDC	1080.7	1012.1	2092.8
11.	Import Duties (10% F.C.)	—	110.	110.
	TOTAL W/O IDC (1980)	1080.7	1122.1	2202.8
	x 2 Lines	2161.4	2244.2	4405.6

ALL COSTS IN 1980 MILLION BAHTS (MB)

185

7.1.2 Summary of Facility Cost

We have prepared our cost estimates relative to the in-service date required of each facility including transmission lines, substation terminals, transformer capacity and reactive compensation. The facility schedule upon which our cost estimate is based is shown in Table 7-5.

TABLE 7-5

500 kV TRANSMISSION FACILITY SCHEDULE

IN SERVICE	FACILITY	CONCURRENT WITH MAE MOH UNIT	UNIT COMMISSIONING DATE
1986	Mae Moh and Chum Saeng Substation	7	Dec. 1986
	Mae Moh-Chum Saeng Line 1	7	Dec. 1986
1987	Mae Moh-Chum Saeng Line 2	8	Aug. 1987
	Line Termination at Mae Moh and Chum Saeng Substation	8	Aug. 1987
1988	Min Buri Substation	-	-
	Chum Saeng-Min Buri Line 1	-	-
	Line Termination at Chum Saeng Substation		
1991	Mae Moh Unit 9 Termination	9	Oct. 1991
1992	Mae Moh Unit 10 Termination	10	Apr. 1992
1993	Chum Saeng-Min Buri Line 2	-	-
	Line Termination at Chum Saeng and Min Buri Substation		

To affect the in-service dates for the required transmission facilities detailed in Table 7-5 we have estimated the cost for each facility to support this schedule. Cost for each facility to support the in-service dates recommended are detailed in Table 7-6.

186

TABLE 7-6

TRANSMISSION FACILITY COST SCHEDULE
COST (1980 M$)

SCHEDULED IN SERVICE	FACILITY	F. C.	L. C.	TOTAL
Dec. 1986	Mae Moh Substation	218.8	74.2	293.0
Dec. 1986	Chum Saeng Substation	265.2	91.5	356.7
Dec. 1986	Mae Moh-Chum Saeng Line 1	619	642.7	1261.7
Aug. 1987	Mae Moh Substation	150.5	69.4	219.9
Aug. 1987	Chum Saeng Substation	265.2	91.5	356.7
Aug. 1987	Mae Moh-Chum Saeng Line 2	619	642.7	1261.7
Mar. 1988	Min Buri Substation	116.6	60.0	176.6
Mar. 1988	Chum Saeng Substation	29.5	14.6	44.1
Mar. 1988	Chum Saeng-Min Buri Line 1	461.7	479.4	941.1
Mar. 1988	Mae Moh Reactors	4.6	1.0	5.6
Jun. 1989	Min Buri Reactors	37.2	8.5	45.7
Oct. 1991	Mae Moh Unit 9 Termination	85.8	23.8	109.6
Apr. 1992	Mae Moh Unit 10 Termination	85.8	23.8	109.6
Apr. 1993	Chum Saeng Substation	10.9	8.3	19.2*
Apr. 1993	Min Buri Substation	37.7	26.8	64.5
Apr. 1993	Chum Saeng-Min Buri Line 2	461.7	479.4	941.1
	TOTALS	3469.2	2737.6	6206.8

* Does not include credit for autotransformer equipment which may be relocated in 1993.

187

7.2 SYSTEM COST DISBURSEMENTS

We have utilized the Transmission Facility Cost Schedule depicted in Table 7-6 to predict the in-service cost for each transmission facility necessary to suport the Mae Moh Project. To predict the cash flow requirements necessary to support this schedule we have prepared construction schedules (Section 8) which are necessary to support these in-service dates.

Our schedules contemplate a time frame of approximately six years for transmission lines and site development for new substations. We have assumed approximately four years will be required to make major substation modifications at an existing substation site.

Table 7-7 is our development of the cost disbursements for the transmission facility.

TABLE 7-7

500 KV TRANSMISSION SYSTEM COSTS STREAM

(MB 1980)

YEAR	TRANSMISSION COSTS	SUBSTATION COSTS	OPERATIONS & MAINTENANCE TRANSMISSION	OPERATIONS & MAINTENANCE SUBSTATION	PEAK LOSSES (MW)	COST OF PEAK LOSSES	ENERGY LOSSES (GWH)	COST OF ENERGY LOSSES	TOTAL	CUMULATIVE PRESENT WORTH 8%	10%	12%
1981	12.6	12.3							24.9	23.1	22.6	22.2
1982	75.7	12.3							88.0	98.5	95.4	92.4
1983	324.8	49.1							373.9	395.3	376.3	358.5
1984	803.9	367.9							1171.8	1256.6	1176.6	1103.2
1985	1071.2	570.9							1642.1	2374.2	2196.3	2035.0
1986	805.5	175.1							980.6	2992.2	2749.8	2531.8
1987	332.9	174.5	5.8	4.4	BASE	BASE	BASE	BASE	517.6	3294.2	3015.4	2765.9
1988	47.0	90.5	11.5	8.8	BASE	BASE	BASE	BASE	157.8	3379.4	3089.0	2829.7
1989	47.1	45.7	15.8	10.5	BASE	BASE	BASE	BASE	119.1	3439.0	3139.5	2872.6
1990	188.2	4.1	15.8	10.5	BASE	BASE	BASE	BASE	218.6	3540.3	3223.8	2943.0
1991	376.5	119.2	15.8	10.5	BASE	BASE	BASE	BASE	522.0	3764.1	3406.7	3093.1
1992	282.4	68.3	15.8	12.1	BASE	BASE	BASE	BASE	378.6	3914.5	3527.4	3190.2
1993	37.6	54.6	15.8	12.1	BASE	BASE	BASE	BASE	120.1	3958.6	3562.2	3217.8
1994			20.1	12.3	BASE	BASE	BASE	BASE	32.4	3969.7	3570.7	3224.4
1995			20.1	12.3	BASE	BASE	BASE	BASE	32.4	3979.9	3578.5	3230.3
1996			20.1	12.3	BASE	BASE	BASE	BASE	32.4	3989.3	3585.5	3235.6
1997			20.1	12.3	BASE	BASE	BASE	BASE	32.4	3998.1	3591.1	3240.3
1998			20.1	12.3	BASE	BASE	BASE	BASE	32.4	4006.2	3597.7	3244.5
1999			20.1	12.3	BASE	BASE	BASE	BASE	32.4	4013.7	3603.0	3248.3
2000			20.1	12.3	BASE	BASE	BASE	BASE	32.4	4020.7	3607.9	3251.6
2001			20.1	12.3	BASE	BASE	BASE	BASE	32.4	4027.1	3612.2	3254.6
2002			20.1	12.3	BASE	BASE	BASE	BASE	32.4	4033.1	3616.2	3257.3
2003			20.1	12.3	BASE	BASE	BASE	BASE	32.4	4038.6	3619.8	3259.7
2004			20.1	12.3	BASE	BASE	BASE	BASE	32.4	4043.7	3623.1	3261.8
2005			20.1	12.3	BASE	BASE	BASE	BASE	32.4	4048.4	3626.1	3263.8
2006			20.1	12.3	BASE	BASE	BASE	BASE	32.4	4052.8	3628.8	3265.5
2007			20.1	12.3	BASE	BASE	BASE	BASE	32.4	4056.9	3631.3	3267.0
2008			20.1	12.3	BASE	BASE	BASE	BASE	32.4	4060.6	3633.6	3268.3
2009			20.1	12.3	BASE	BASE	BASE	BASE	32.4	4064.1	3635.6	3269.5
2010			20.1	12.3	BASE	BASE	BASE	BASE	32.4	4067.3	3637.5	3270.6
2011	(1871.8)								(1871.8)	3895.1	3539.9	3214.8

ALL COSTS ARE IN MILLION OF BAHTS

189

TABLE 7-8

500 kV TRANSMISSION SYSTEM COST DISBURSEMENT
(MB)

	*SUBSTATION		*TRANSMISSION		*TOTAL		*TOTAL	
	F. C.	L. C.	F. C.	L. C.	F. C.	L. C.	YEAR	CUMULATIVE
1981	9.1	3.2	2.0	10.6	11.1	13.8	24.9	24.9
1982	9.0	3.3	10.6	69.1	19.6	68.4	88.0	112.9
1983	36.1	13.0	138.7	186.1	174.8	199.1	373.9	486.8
1984	289.9	78.0	513.9	240.0	803.8	368.0	1171.8	1658.6
1985	418.5	152.4	649.2	422.1	1067.7	574.5	1642.2	3300.8
1986	127.3	47.8	459.1	346.4	586.4	394.2	980.6	4281.4
1987	113.3	61.2	138.1	210.5	251.4	271.7	523.1	4804.5
1988	47.2	43.3	-	47.0	47.2	90.3	137.9	4942.0
1989	39.8	9.2	9.4	37.7	49.2	46.9	96.1	5038.1
1990	7.4	2.8	94.1	94.1	101.5	96.9	198.4	5236.5
1991	132.1	38.1	282.4	94.1	414.5	132.2	546.7	5783.2
1992	63.6	22.1	131.8	150.6	195.4	172.7	368.1	6151.3
1993	14.5	19.0	-	37.6	14.5	56.6	71.1	6222.4
				TOTALS	3737.1	2485.3		
TOTAL IN MILLION $ U.S. (1980)					186.86	-	-	311.12
TOTAL IN MB (1980)					2485.3	-	-	6222.4

*ALL COSTS IN MILLION BAHTS (MB)

190

8.0 CONSTRUCTION SCHEDULES

8.1 We are enclosing Project Schedules for the Mae Moh-Bangkok Transmission System (Table 8.1). We have divided the design and construction periods into four cateories:

- Survey/Design
- Bidding & Award of Contract
- Manufacture & Delivery
- Construction

Our scheduling anticipates somewhat shorter schedules for site additions or second parallel lines based on previous related work for the facilities. For a more detailed breakdown of the relative sequential details involved, please refer to the schedules included in our report of May, 1981.

8.2 We have scheduled the project facilities on four (4) phases for the 500 kV system, as follows:

(1) Phase I - The first 500 kV line from Mae Moh to Chum Saeng, and related substation facilities for in-service in late 1986, to coincide with Mae Moh Generator 6. Then the second 500 kV line from Mae Moh to Chum Saeng, and related substation facilities in service in mid 1987 with Generator No. 8.

(2) Phase II - The first 500 kV line from Chum Saeng to Min Buri, and related substation facilities in early 1988.

(3) Phase III - Mae Moh Generator No. 9 and required substation facilities in service late 1991, and Generator No. 10 in service in early 1992. No transmission lines are involved in this phase.

(4) Phase IV - The second 500 kV line from Chum Saeng to Min Buri and related substation facilities in service in early 1993.

TABLE 8-1 CONSTRUCTION SCHEDULE FOR MAE MOH BANGKOK TRANSMISSION SYSTEM AND RELATED FACILITIES

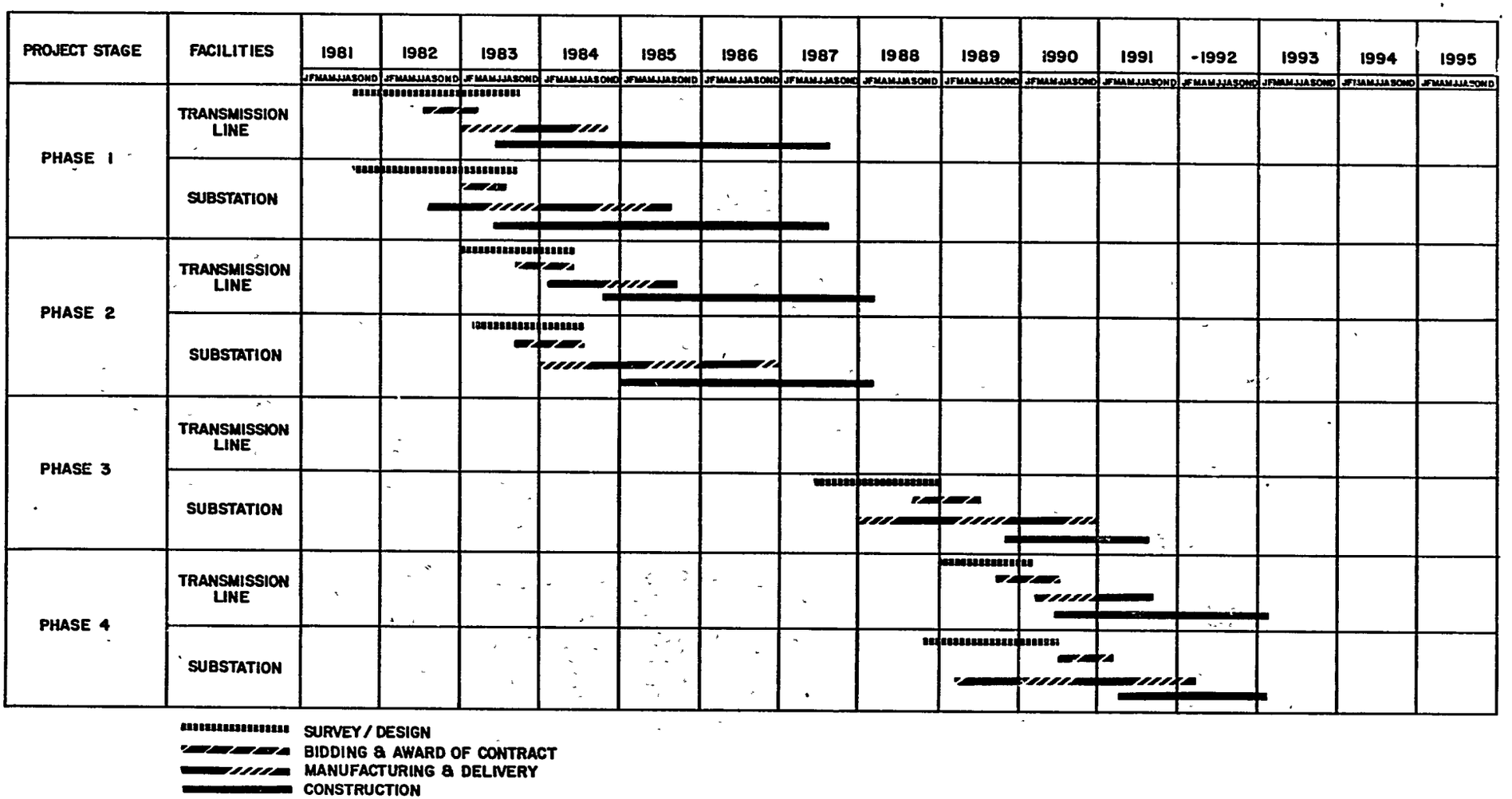

BIBLIOGRAPHY

1 Electricity Generating Authority of Thailand, System Planning Division
Mae Moh-Bangkok EHV Transmission Project
(Data for Feasibility Study)
EGAT
February 1980 - Report No. 844-2306

2 Electricity Generating Authority of Thailand, System Planning Division
EGAT's Power Development Plan (1980 - 1983)
EGAT
December 1980

3 Bonneville Power Administration: U. S. Department of Energy
Preliminary Study of Mae Moh-Bangkok EHV Transmission Project
EGAT
July 1979

4 LEMCO ENGINEERS (International), Inc. and Shah & Associates, Inc.
Mae Moh-Bangkok EHV Transmission Study
Prepared for EGAT and BPA
May 1981

5 EGAT's Response to December 1, 1980 Correspondence to Bonneville Power Administration
March 1981

6 American National Standards Institute
National Electrical Safety Code
1981 Edition

BIBLIOGRAPHY

7 Sponsored by ERC and EPRI
Transmission Line Reference Book - 345 kV and Above
1975

8 Task Committee on Tower Design of the Structural Division
Guide for Design of Steel Transmission Towers
ASCE
1971

9 Terzaghi & Peck
Soil Mechanics in Engineering Practice
John Wiley & Sons
2nd Edition
1967

10 Teng, Wayne C.
Foundation Design
Prentice-Hall, Inc.
1962

11 IEEE
"500 kV AC Substations Design Criteria Summary of Industry Practice"
Transactions on Power Apparatus and Systems
Vol. PAS-88, No. 6, Pages 854-861
June 1969

MAE MOH - BANGKOK EHV TRANSMISSION STUDY

VOLUME III

APPENDIX

PREPARED FOR

ELECTRICITY GENERATING AUTHORITY OF THAILAND
BONNEVILLE POWER ADMINISTRATION

JULY 1981

LEMCO ENGINEERS (International), Inc.
SHAH & ASSOCIATES

195

LEMCO ENGINEERS (INTERNATIONAL), INC.

P.O. BOX 28549 • WEST COUNTY BRANCH • ST. LOUIS, MISSOURI 63141

August 3, 1981

Mr. Kasame Chatikavanij
General Manager
Electricity Generating Authority
of Thailand
Nonthamburi, Thailand

Subject: Mae Moh - Bangkok EHV Transmission Project
Submittal of Final Report

Dear Mr. Kasame:

Transmitted herewith is the final report for the Mae Moh - Bangkok EHV Transmission Project. This report has been revised to include comments from your staff and is being transmitted to you as a final document.

For your convenience in reviewing the report, we have divided it into three volumes. Volume I is an executive summary, Volume II contains technical information and Volume III contains additional back-up data.

We sincerely appreciate the opportunity to work with EGAT on this project and look forward to being of further service to you.

Sincerely,

LEMCO ENGINEERS (International), Inc.

W. E. Sebastian

W. E. Sebastian
President

194

APPENDIX

MAE MOH - BANGKOK EHV TRANSMISSION STUDY

CONTENTS

TITLE PAGE		i
LETTER OF TRANSMITTAL		ii
CONTENTS		iii
1.0	SYSTEM PLANNING CRITERIA	1.1
1.1	TRANSMISSION SYSTEM REQUIREMENTS	1.1
1.2	STABILITY REQUIREMENTS	1.1
1.3	REACTIVE REQUIREMENTS	1.2
1.4	ACCEPTABLE FACILITY LOADINGS	1.2
2.0	SUBSYNCHRONOUS RESONANCE STUDY	2.1
2.1	INTRODUCTION	2.1
2.2	SYSTEM DATA	2.1
2.3	METHOD OF ANALYSIS	2.2
2.4	DISCUSSION OF RESULTS AND COMMENTS	2.2
2.5	CONCLUSIONS	2.4
3.0	ELECTRICAL ENVIRONMENTAL CONSIDERATIONS	3.1
3.1	INTRODUCTION	3.1
3.2	ELECTRICAL ENVIRONMENTAL EFFECTS	3.1
3.3	COMPARATIVE ANALYSIS OF 500 kV & 400 KV TRANSMISSION ALTERNATES	3.1
3.4	ELECTRICAL ENVIRONMENTAL EFFECTS OF PRELIMINARY 500 kV TRANSMISSION LINE DESIGN	3.3
3.5	CONCLUSIONS	3.4
4.0	SYSTEM COST AND ECONOMIC DATA	4.1
5.0	LOAD FLOW DIAGRAMS - 400 kV and 230 kV	5.1
6.0	TRANSIENT STABILITY STUDY - 400 kV	6.1
7.0	MINUTES OF MEETING	7.1

147

1.0 APPENDIX 1 - SYSTEM PLANNING CRITERIA

This section describes the system planning criteria used in planning transmission alternate from Mae Moh to Min Buri. The transmission alternate will be planned so that it can be operated to transmit the specified power during credible system contingencies without over stressing the existing EGAT System.

1.1 Transmission System Requirements

The transmission system from Mae Moh to Chum Saeng and Chum Saeng to Min Buri will be developed so that it can be operated at peak load level to meet the following unscheduled contingencies without causing overload, instability, and generator dropping of the EGAT System.

- The loss of a single transmission line from either Mae Moh to Chum Saeng or Chum Saeng to Min Buri, any single generating unit installed at Mae Moh 2, and 500 kV/230 kV transformer without exceeding the emergency rating of any facility.
- After the outage, the system must be capable of readjustment so that all equipment will be loaded within normal ratings.

EXCEPTIONS

- Two or more transformers should not be lost during line fault on one of the lines from either Mae Moh to Chum Saeng or Chum Saeng to Min Buri without dropping the load.
- The loss of one line, transformer, reactor, or combination during bus fault or line fault and stuck breaker shall be permissable.

1.2 Stability Requirements

The stability of the EGAT System will be maintained without loss of load during and after the three phase fault at peak load transfer period. The fault clearing time during this period shall be 3 - 5 cycles. The circuit breaker reclosure shall not be assumed for transient stability studies.

1.3 Reactive Requirements

Sufficient reactive compensation with adequate controls will be planned to allow supply of the reactive load and loss requirement, in order to maintain system voltage between 0.9 pu to 1.1 pu during both normal and abnormal conditions at 500 kV and 230 kV buses.

(1) Voltage Criteria

The voltages at load and no-load buses shall be maintained within 0.9 to 1.1 pu limits at 500 kV and 230 kV buses.

1.4 Acceptable Facility Loadings

1.4.1 Transmission Line Ratings

The Mae Moh to Min Buri EHV transmission lines shall be loaded such that the maximum conductor temperature during normal and abnormal conditions shall not exceed a temperature of 60° C over 40° C ambient. The 230 kV transmission lines will be loaded as per EGAT's existing criteria, namely, maximum conductor temperature of 45° C ambient.

1.4.2 Transformers

Main transformers (500 kV/230 kV) shall have sufficient capacity and interconnections between main transformation points such that no load is lost with the loss of any one transformer bank during abnormal operating condition.

1.4.3 Power Circuit Breakers

Two cycle power circuit breakers having sufficient interrupting capacity shall be used to interrupt faults.

2.0 APPENDIX 2 - SUBSYNCHRONOUS RESONANCE STUDY

2.1 Introduction

This section covers the results of a preliminary evaluation of potential subsynchronous problems for the Mae Moh to Min Buri 500 kV transmission system in which transient stability studies have determined the need for 60% series capacitor compensation. The subsynchronous resonance analysis (SSR) was based upon a system given in Figure 2.1. The study was performed using hybrid computer facility by the Power Systems Technology Department of Siemens Allis, Inc.

2.2 System Data

In the absence of actual inertia values of various steam and hydrogenerators, the following parameters were used:

2.2.1 Steam Generator - 300 MVA Base

Mechanical: .I nertias - H Constants in Seconds: EXC = 0.0314,

GEN = 0.856, Turbi - 0.331,

TURB2 = 0.185, SHAFTS -P.U./RAD,

EXC-GEN - 4.94, GEN-TURBI - 67.7,

TURBI - TURB2 = 45.5

f_n = 27,30 Hz

2.2.2 Hydrogenerator

Hg = 3.5

H_t = 0.35

K = 2512.3 pu/Radian

f_n = 10 Hz

HM = 38.5

Maximum Gain = 0.216

200

2.2.3 System Network

The network given in Figure 2-1 is described by the impedance parameters given in Tables 1-1 and 1-2.

2.3 Method of Analysis

The preliminary analysis of EGAT System was made using a frequency scanning program to determine if the series capacitors produce a potential SSR resonances. This program provides equivalent impedance viewed from a given generator as a function of frequency.

Transient torque analysis was then undertaken to study the torque amplification and stability of generator, network, and torsional system. The transient torques occur during normal system disturbances such as fault clearing, and conditions which can produce SSR steady state instability.

2.4 Discussion of Results and Comments

2.4.1 Frequency Scan Analysis

Frequency scan of thirteen different system configurations were run to determine potential SSR situations of practical concern. These configurations are designated as Case 1, Case 2, through Case 13. The results of each case are plotted in terms of both amplitude and phase of the circuit impedance as viewed from a given generator in Figure 2-2 through 2-14. Thus, for example, Case No. 1, Figure 2-2 depicts equivalent impedance of the whole system viewed from Bhumibol Generator. Since the mechanical natural frequency of hydrogenerators is 10 Hz, it is obvious from Figures 2-2, 2-3, 2-7, and 2-8 that there is no SSR problem due to series capacitors to either Bhumibol or Sirikit. The natural frequency of Case No. 1 configuration is 11 Hz and hence mechanical natural frequency of Bhumibol Generator should be 39 Hz for SSR to occur.

Mae Moh-115 and Mae Moh-230 generators are not affected by series compensation as can be seen from Figures 2-4, 2-5, and 2-10.

However, Mae Moh-2 generators (2400 MW total generation capacity) show a distinct natural frequency of 29.5 Hz (Figure 2-6). It is expected that considerable SSR interactions will occur for a generator turbine having torsional natural frequencies in the 20 Hz range. Figures 2-11 through 2-14 give impedance characteristics for various operating conditions. It is seen that the potential for SSR exists since the required mechanical frequencies vary from 19 Hz to 33 Hz.

2.4.2 Transient Torque Analysis

Results of transient performance and stability of SSR interaction are given for twelve cases (Cases 14 - 25), given in Figures 2-15 through 2-26, involving variations in both number of 300 MW units at Mae Moh and the 500 kV lines to Min Buri. Figures 2-15 through 2-26 show the system dynamic response to a fault-clear disturbance at the Chum Saeng Bus. A fault with an impedance of .01 pu was applied at .01 seconds after a positive going zero crossing of phase a source voltage and cleared on successive current zeros after a fault duration of .047 seconds.

The rotating portion of each generation system consists of:

.. Two turbine stages (H_2 and H_1),

.. The generator inertia (H_g),

.. and a rotating excitor (H_{exc}).

Strip charts show the air gap torque ($T_{electrical}$), and

The torques in the shafts between each inertia

.. (T_{21}, T_{1g}, and $T_{g\ exc}$).

The following was also plotted:

.. The generator speed deviation from synchronous speed (Δw_{gen}),

.. the 500 kV bus voltage at Mae Moh,

.. the voltage across the capacitor bank on the Mae Moh to Chum Saeng Line, and

.. the Chum Saeng fault current.

The variables in these figures are plotted in per unit on 1000 MVA, 500 kV system base.

Table 2-2 summarizes results in terms of stability and peak shaft torques during the period following a fault clearing transient. For the turbine generator system selected for this preliminary study the major

mechanical natural frequency of concern was at 30 Hz (mechanical). Therefore, network configurations which have 20 Hz electrical natural frequencies are of particular interest and concern. Line outages, variations in capacitor compensation level, levels of system stiffness, and number of generator units in service provide a large variation in the electrical network of significance to SSR.

Cases 16 and 17 show that with 60% compensation both the 2 and 3 units of generation cases will be unstable.

2.5 Conclusions

Hydrogenerator units - Bhumibol and Sirikit - will not experience SSR problem even under the most pessimistic assumptions.

Mae Moh-115 and Mae Moh-230 steam generating units will not experience SSR problems under normal operation. However, the worst case situation in which Mae Moh-2 units are off line and the Mae Moh-230 units remain connected would produce SSR problems. This is considered a possible but highly unlikely possibility.

Mae Moh-2 steam generating units will experience serious SSR problems if countermeasures are not used. From a practical point of view the Mae Moh to Chum Saeng to Min Buri Transmission System is essentially radial. The shunting ties have minimal effect.

TABLE 2-1

THE NETWORK IS DESCRIBED IN THE FOLLOWING BRANCHES

I	FROM	TO	TYPE	VALUE
1	0	1	L	0.120E 00
2	1	0	C	0.130E 00
3	1	0	C	0.180E 00
4	1	0	C	0.180E 00
5	1	4	L	0.325E 00
6	1	10	RL	0.230E-01 0.300E 00J
7	10	8	C	0.556E 01
8	1	11	RL	0.230E-01 0.300E 00J
9	11	8	C	0.556E 01
10	8	0	C	0.180E 00
11	8	0	C	0.180E 00
12	8	0	L	0.143E 01
13	8	0	C	0.135E 00
14	8	12	RL	0.170E-01 0.225E 00J
15	12	9	C	0.741E 01
16	9	0	C	0.135E 00
17	8	0	C	0.135E 00
18	8	13	RL	0.170E-01 0.225E 00J
19	13	9	C	0.741E 01
20	9	0	C	0.135E 00
21	9	14	L	0.540E-01
22	9	0	L	0.833E 00
23	14	0	L	0.683E 00
24	14	0	R	0.167E 00
25	14	0	6	0.500E-01
26	8	16	L	0.160E 00
27	16	7	RL	0.750E-02 0.550E-01J
28	0	4	L	0.953E 00
29	4	6	L	0.986E 00
30	6	0	R	0.145E 02
31	6	0	C	0.310E-01
32	6	5	RL	0.365E-01 0.113E 00J
33	0	5	L	0.127E 01
34	5	0	R	0.35[illegible]E 01
35	5	0	C	0.250E-01
36	4	0	C	0.310E 00
37	4	15	RL	0.945E-01 0.688E 00J
38	15	0	C	0.310E 00
39	15	0	R	0.248E 01
40	15	0	C	0.670E-01
41	15	2	RL	0.860E-01 0.415E 00J
42	0	2	L	0.100E 01
43	2	0	L	0.588E 02
44	2	0	R	0.286E 02
45	15	0	C	0.210E 00
46	15	7	RL	0.105E 00 0.498E 00J
47	7	0	C	0.210E 00
48	7	0	R	0.138E 01
49	7	0	C	0.246E 00
50	7	0	C	0.130E 00
51	7	17	RL	0.168E 00 0.130E 01J
52	17	0	C	0.130E 00
53	17	0	R	0.303E 02
54	17	0	L	0.500E 03
55	17	3	RL	0.460E-01 0.352E 00J
56	7	0	C	0.353E 00
57	7	3	RL	0.106E 00 0.779E 00J
58	3	0	C	0.353E 00
59	0	3	L	0.748E 00
60	3	0	L	0.333E 02
61	3	0	R	0.294E 02

TABLE 2-2

Case Summary

MAE MOH Generator Dynamic Response

MAE MOH Generator Units in Service	MAE MOH to Chum Saeng		Chum Saeng to Min Buri		SSR Stable?	*Peak Shaft Torques During First .5 sec.		
	Lines	X_C PU/Line	Lines	X_C PU/Line		T_{21} PU	T_{1g} PU	T_{g-exc}
8	2	.18	2	.135	Yes	.30	1.07	.08
6	2	.18	2	.135	Yes	.83	1.60	.43
4	2	.18	2	.135	Yes	1.67	3.17	.87
3	2	.18	2	.135	No	2.70	5.00	1.50
2	2	.18	2	.135	No	5.00	9.33	2.33
1	2	.18	2	.135	Yes	3.90	5.83	1.13
8	2	.15	2	0	No	1.27	2.27	.53
8	1	.18	2	.135	Yes	.33	.67	.20
8	1	.0325	2	.135	No	1.00	1.67	.40
7	1	.0325	2	.135	No	1.27	1.93	.43
4	1	.0525	2	.135	No	1.00	3.83	.833
4	1	.18	2	.135	Yes	.73	1.50	.43

*Peak torques in per unit on 300 MVA generator base result from fault-clear disturbance at Chum Saeng bus.

205

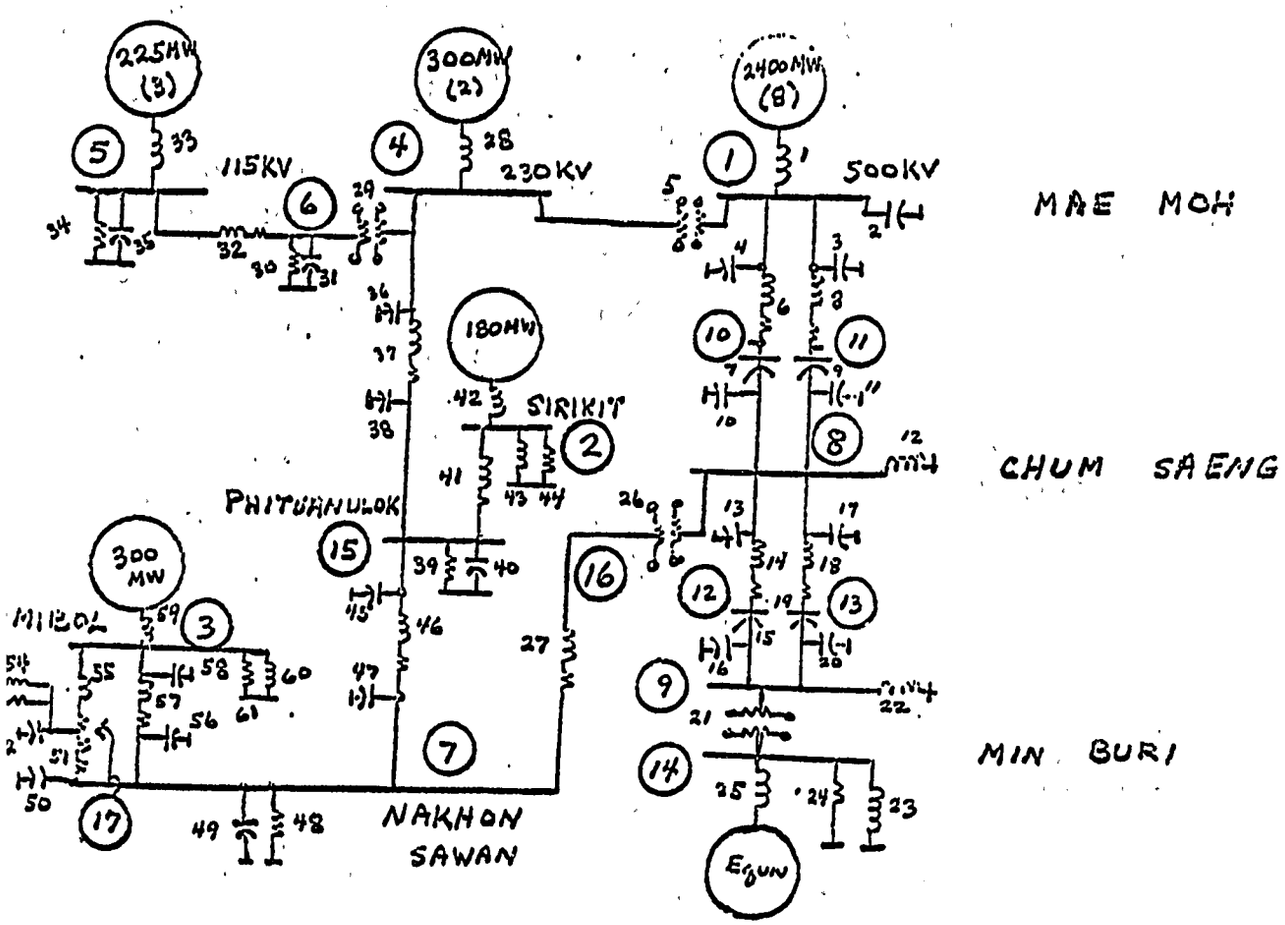

FIGURE 2-3 BUS AND BRANCH IDENTIFICATION FOR FREQUENCY SCAN PROGRAM

206

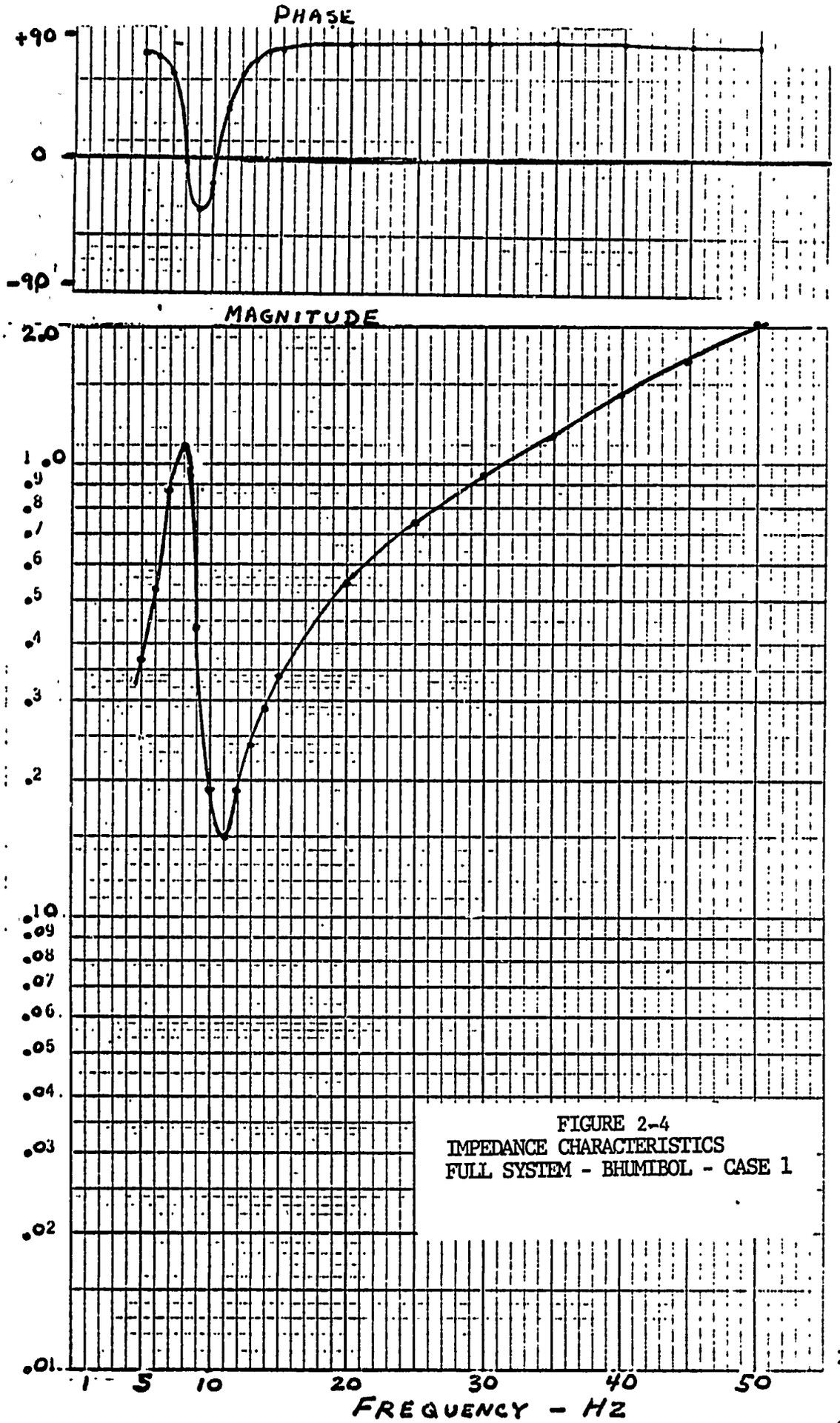

FIGURE 2-4
IMPEDANCE CHARACTERISTICS
FULL SYSTEM - BHUMIBOL - CASE 1

207

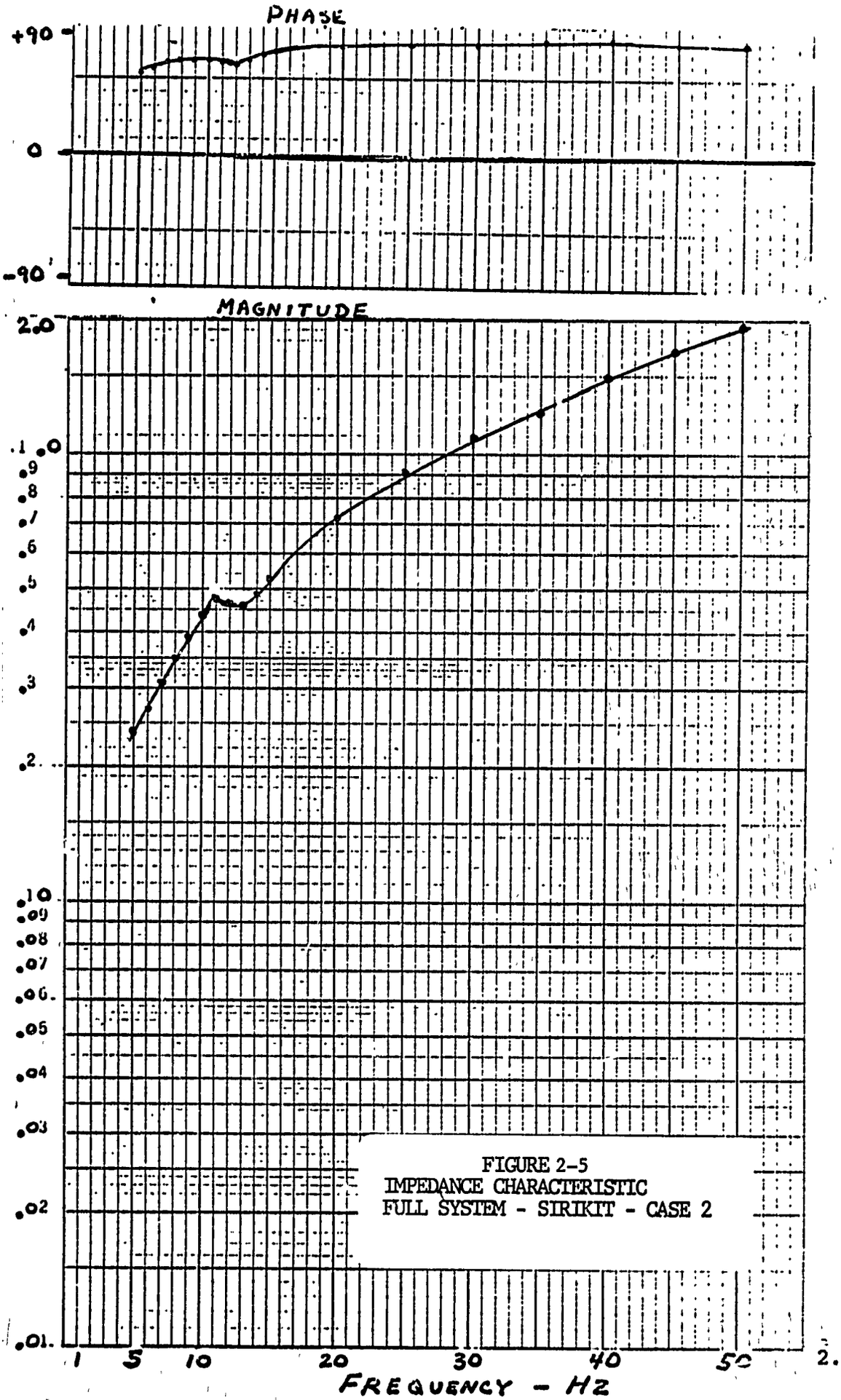

FIGURE 2-5
IMPEDANCE CHARACTERISTIC
FULL SYSTEM - SIRIKIT - CASE 2

208

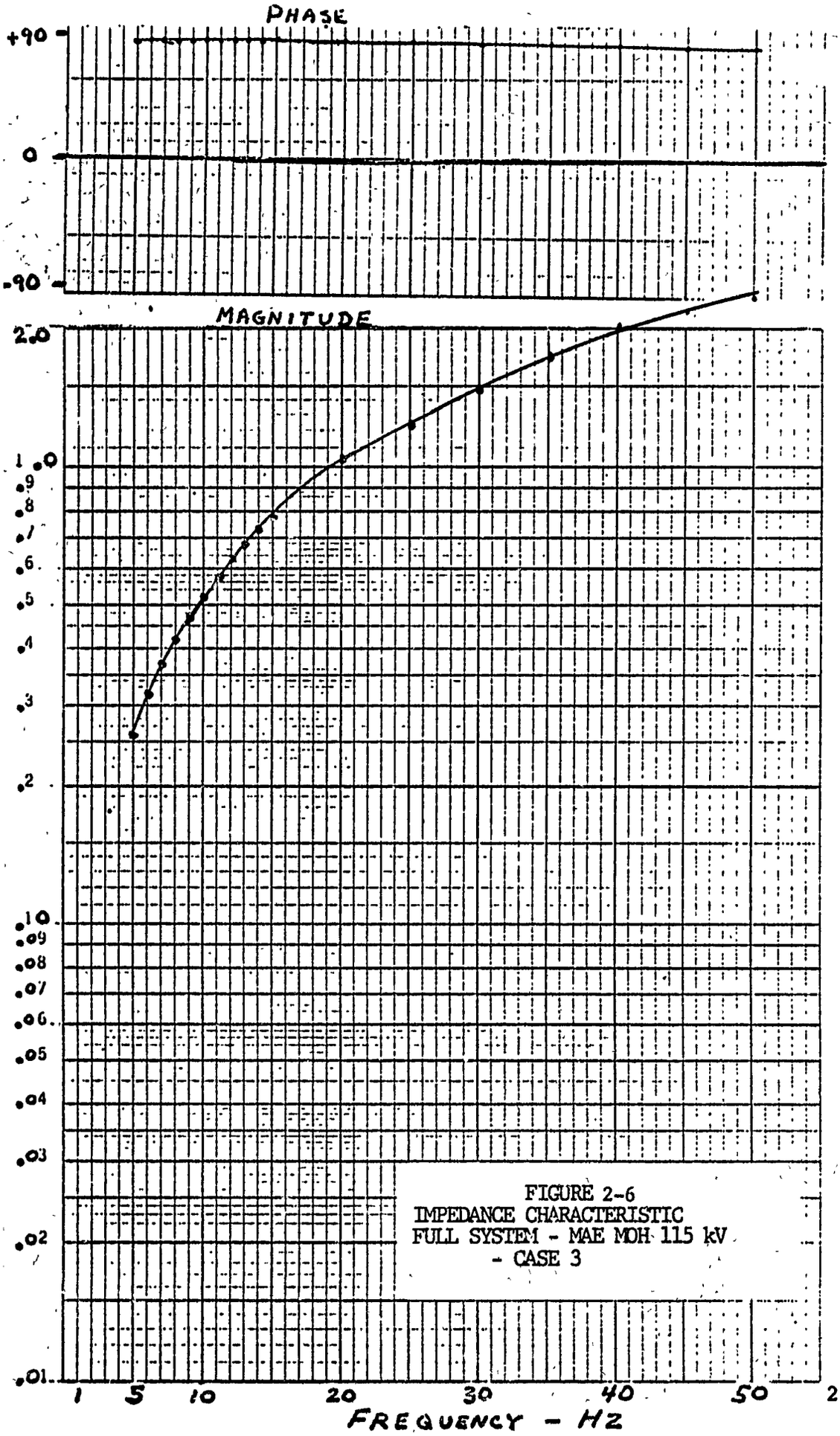

FIGURE 2-6
IMPEDANCE CHARACTERISTIC
FULL SYSTEM - MAE MOH 115 kV
- CASE 3

209

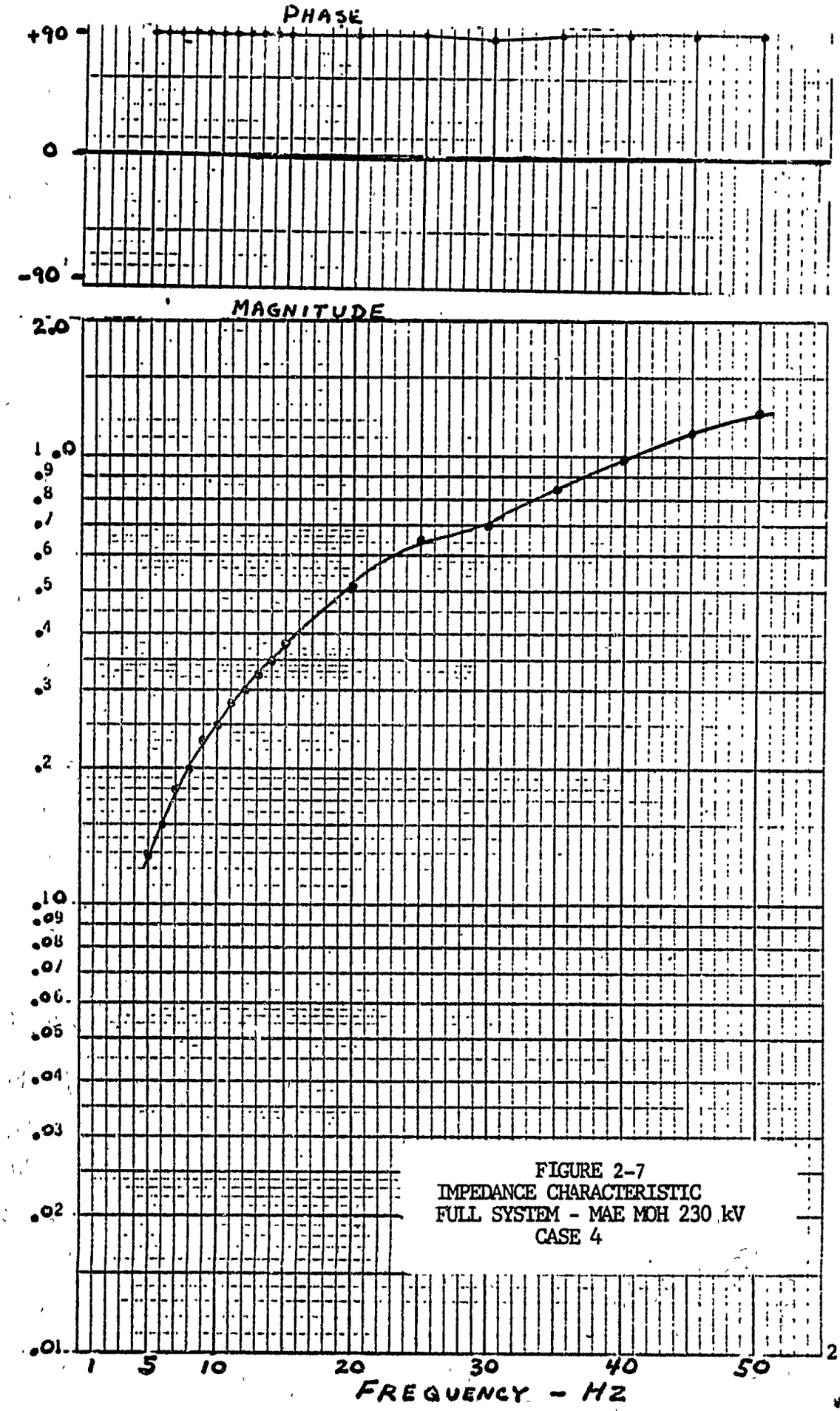

FIGURE 2-7
IMPEDANCE CHARACTERISTIC
FULL SYSTEM - MAE MOH 230 kV
CASE 4

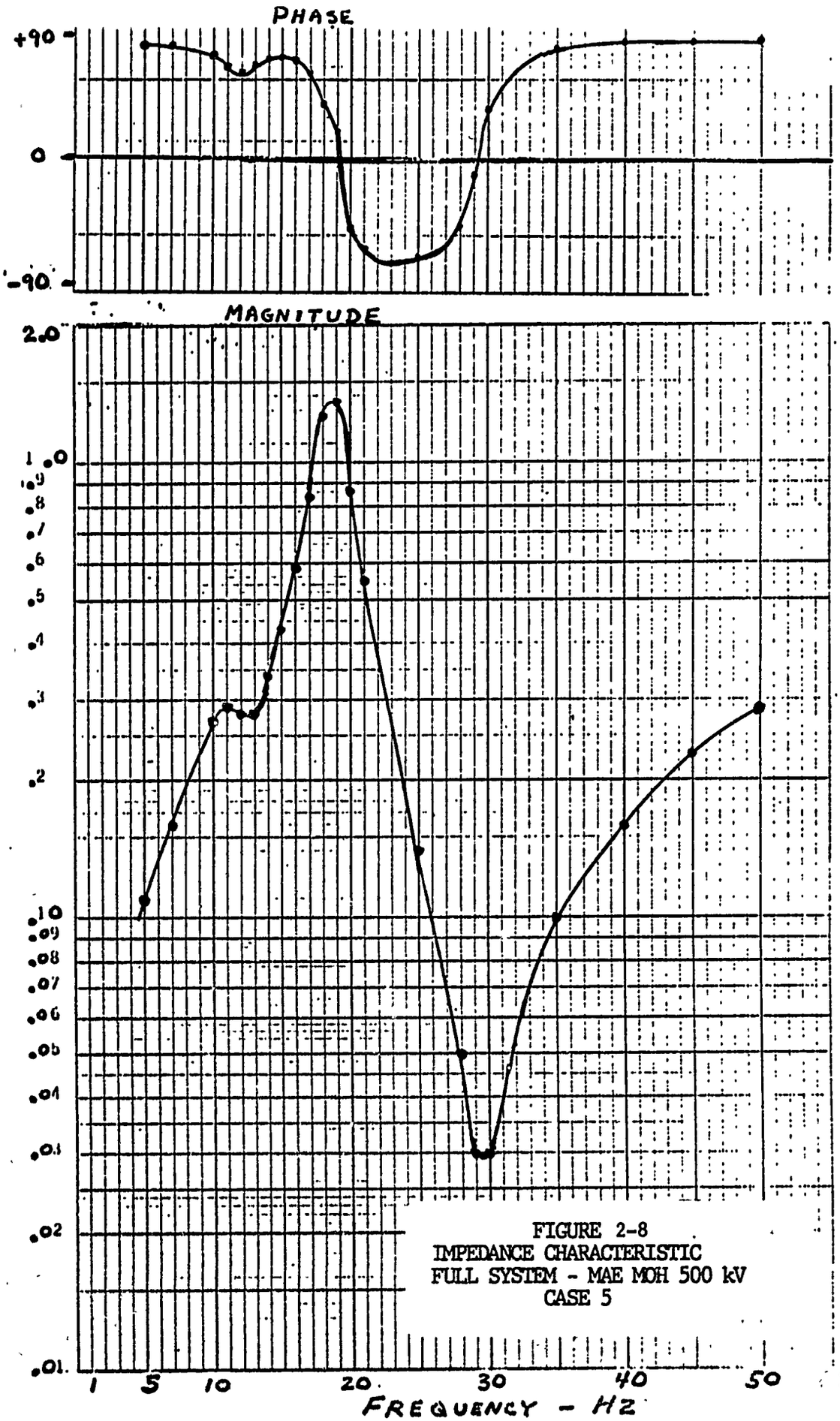

FIGURE 2-8
IMPEDANCE CHARACTERISTIC
FULL SYSTEM - MAE MOH 500 kV
CASE 5

211

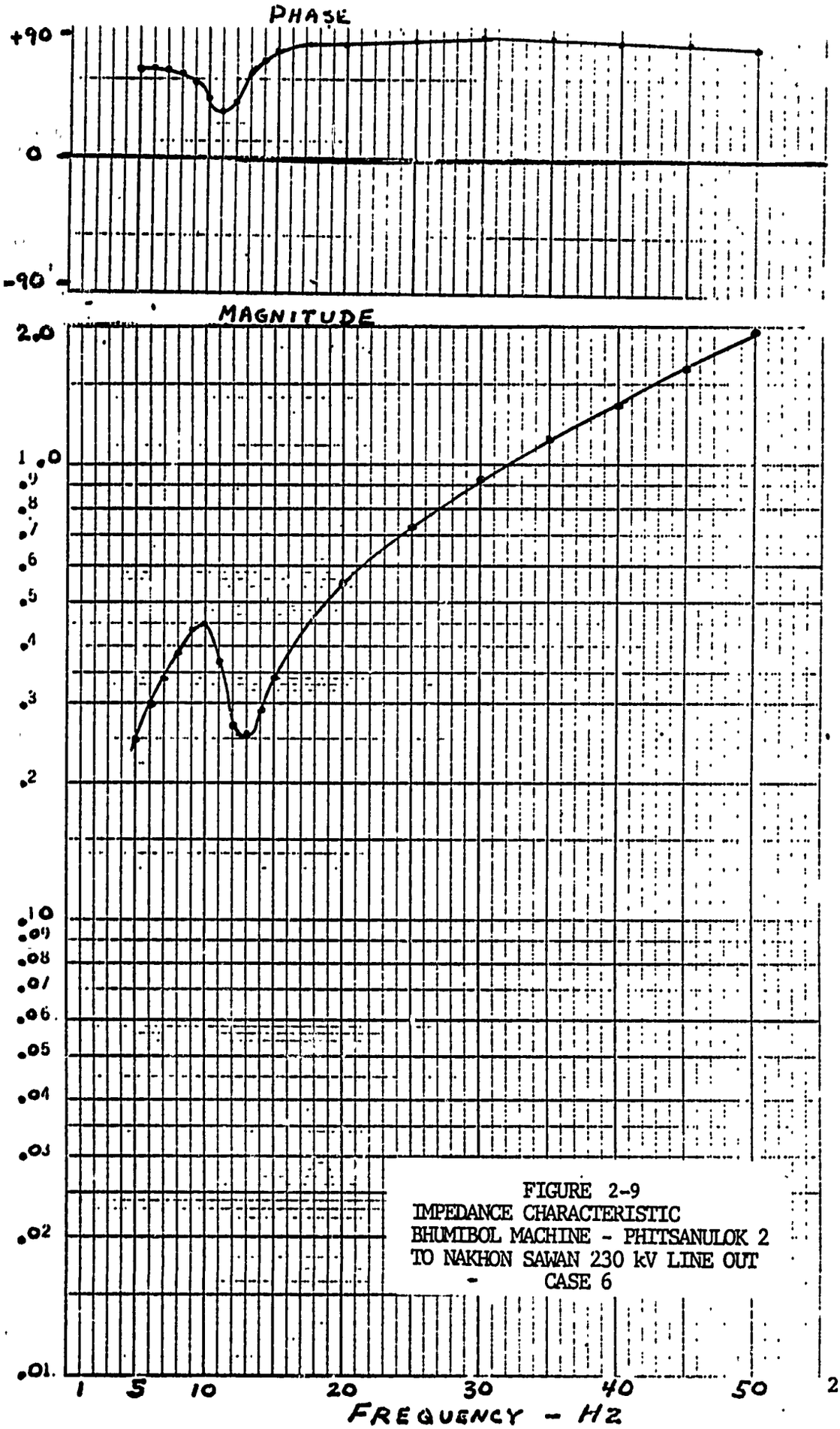

FIGURE 2-9
IMPEDANCE CHARACTERISTIC
BHUMIBOL MACHINE - PHITSANULOK 2
TO NAKHON SAWAN 230 kV LINE OUT
- CASE 6

212

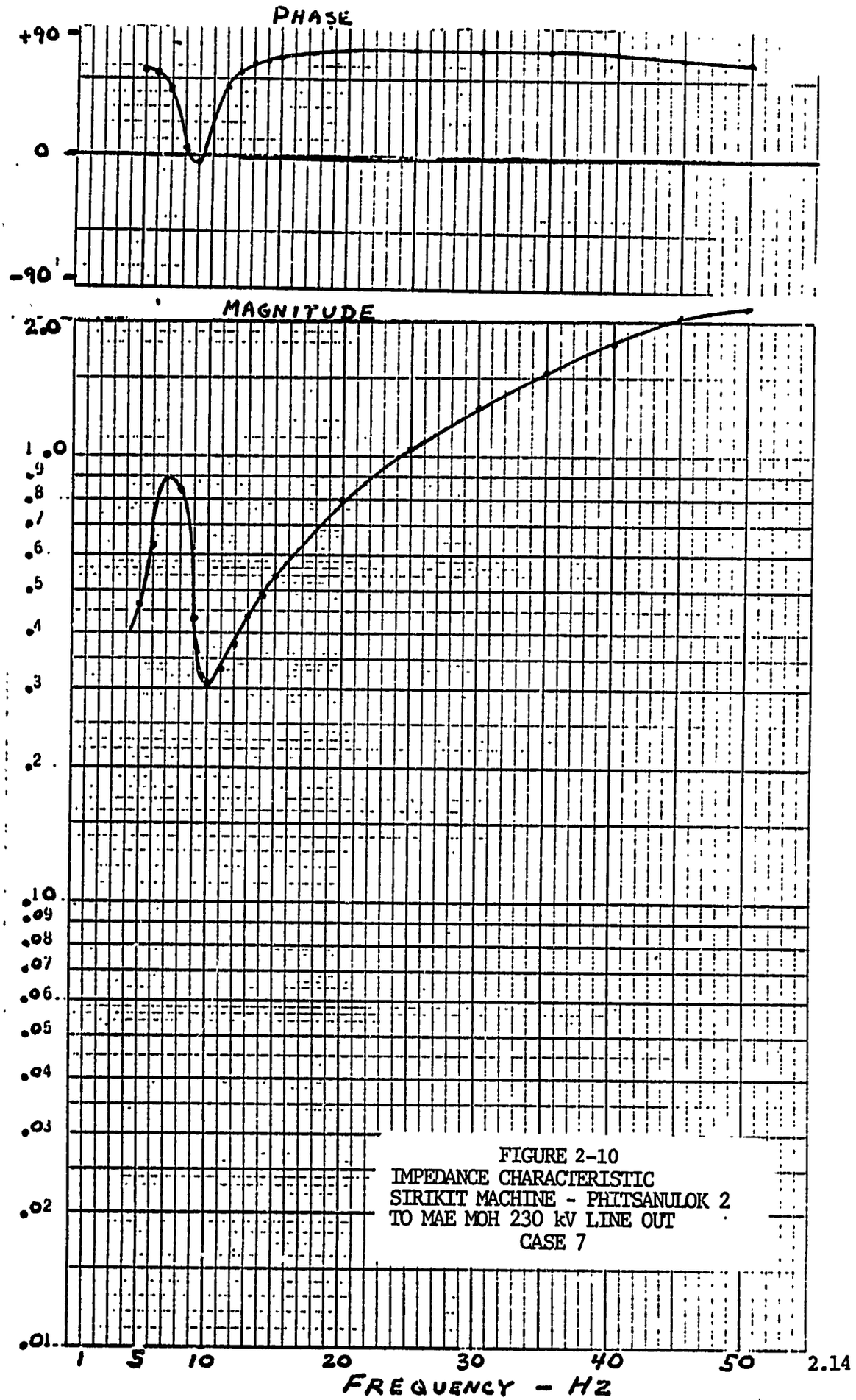

FIGURE 2-10
IMPEDANCE CHARACTERISTIC
SIRIKIT MACHINE - PHITSANULOK 2
TO MAE MOH 230 kV LINE OUT
CASE 7

213

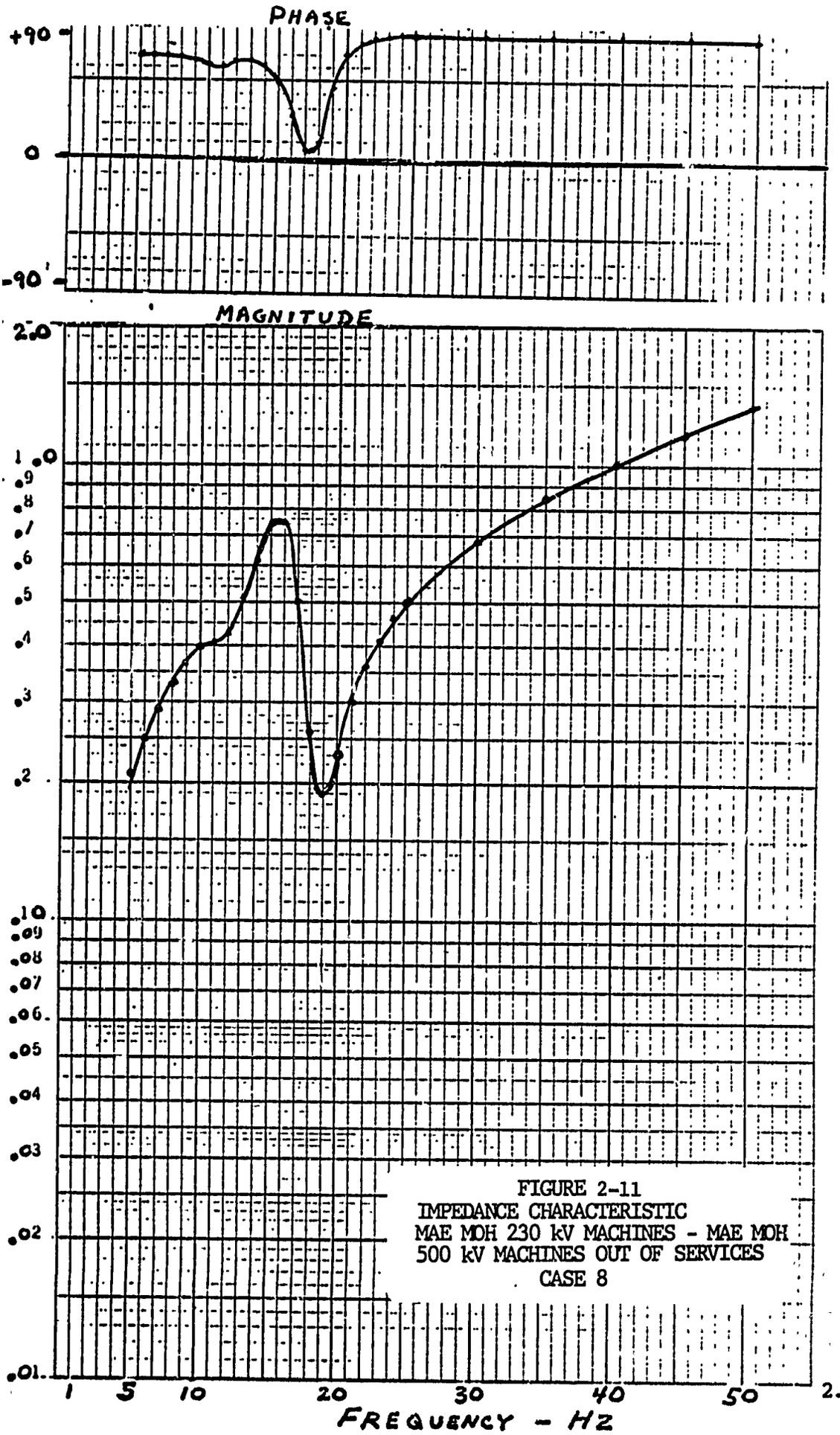

FIGURE 2-11
IMPEDANCE CHARACTERISTIC
MAE MOH 230 kV MACHINES - MAE MOH
500 kV MACHINES OUT OF SERVICES
CASE 8

214

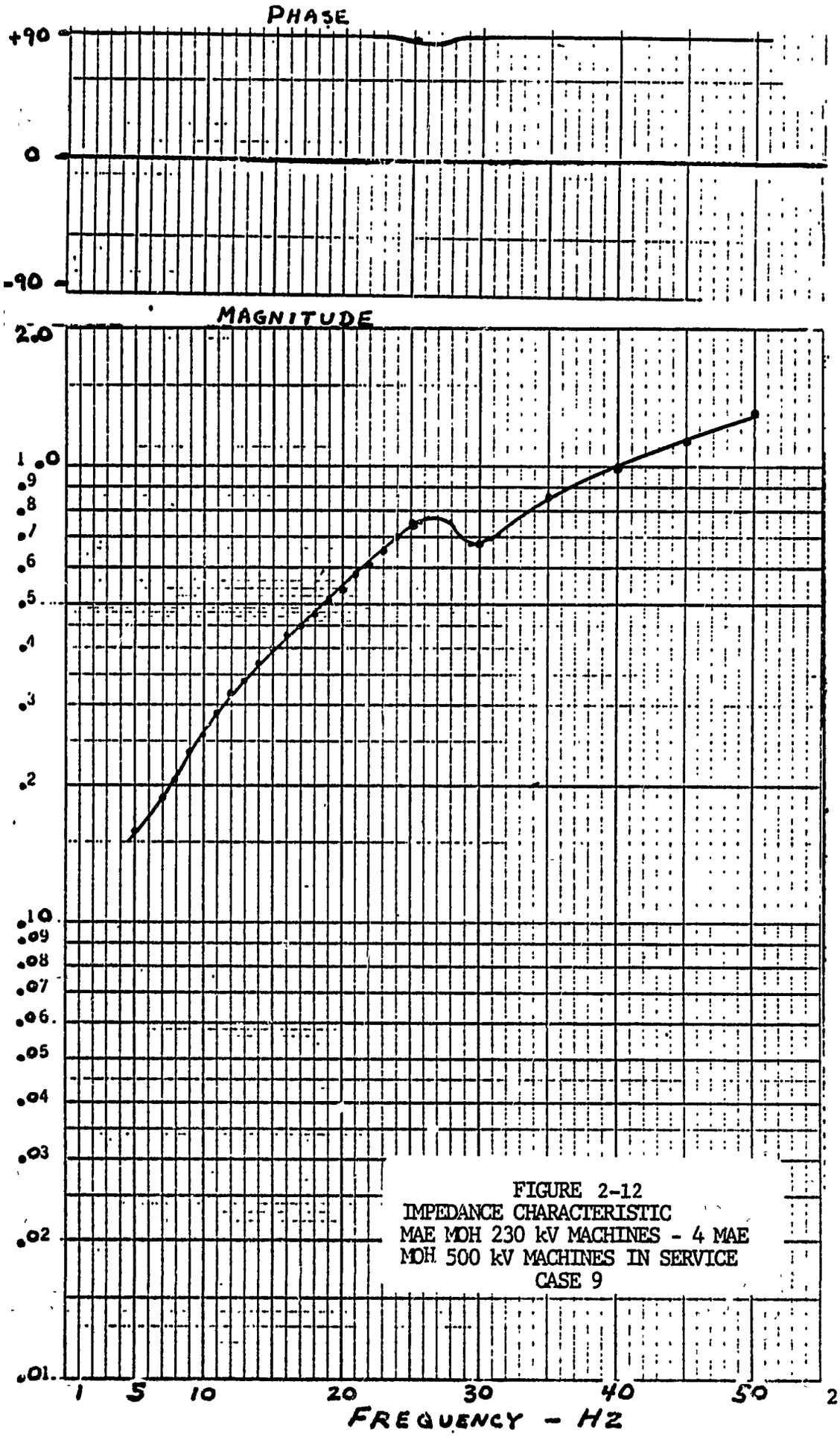

FIGURE 2-12
IMPEDANCE CHARACTERISTIC
MAE MOH 230 kV MACHINES - 4 MAE
MOH 500 kV MACHINES IN SERVICE
CASE 9

2.15

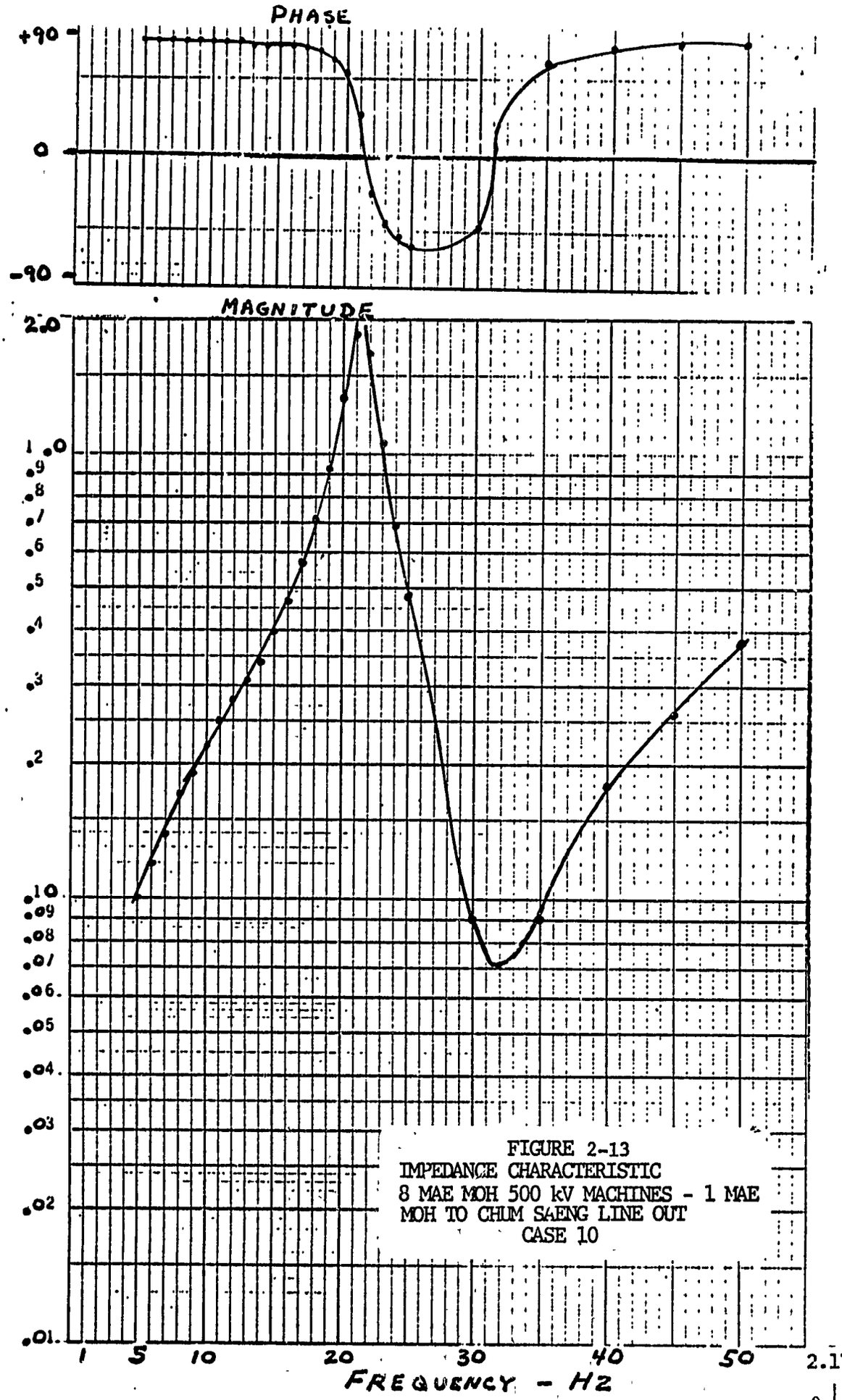

FIGURE 2-13
IMPEDANCE CHARACTERISTIC
8 MAE MOH 500 kV MACHINES - 1 MAE MOH TO CHUM SAENG LINE OUT
CASE 10

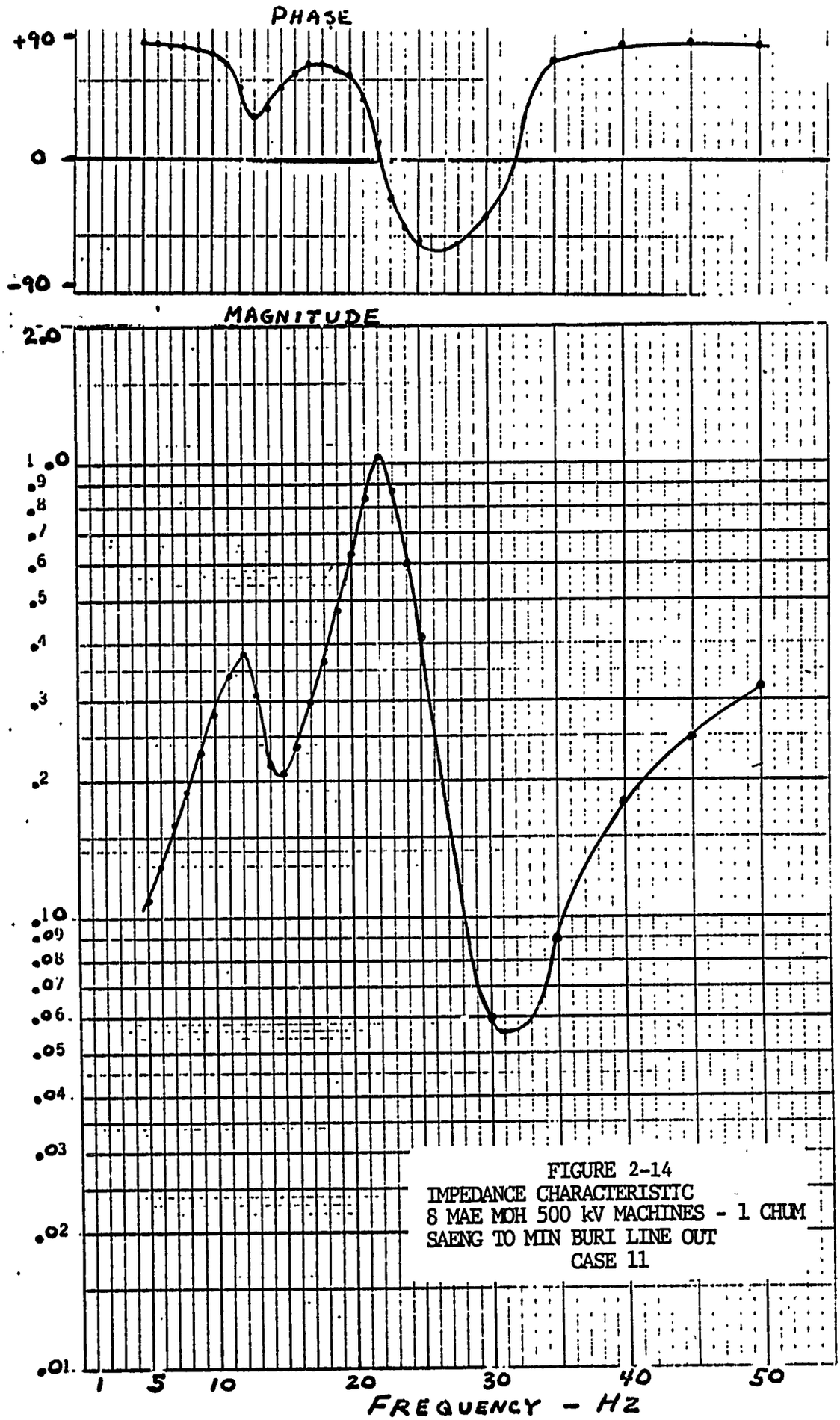

FIGURE 2-14
IMPEDANCE CHARACTERISTIC
8 MAE MOH 500 kV MACHINES - 1 CHUM
SAENG TO MIN BURI LINE OUT
CASE 11

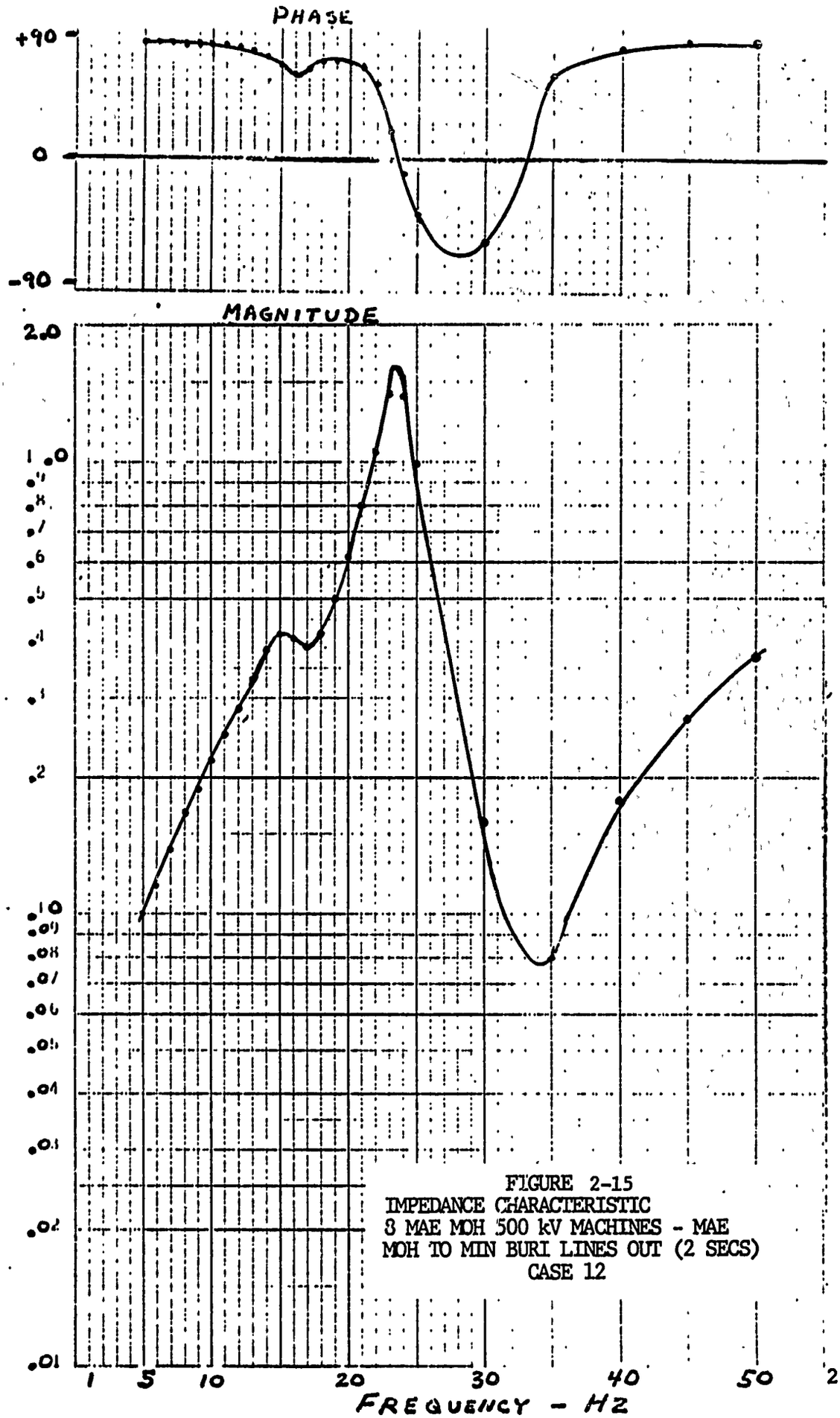

FIGURE 2-15
IMPEDANCE CHARACTERISTIC
8 MAE MOH 500 kV MACHINES - MAE
MOH TO MIN BURI LINES OUT (2 SECS)
CASE 12

218

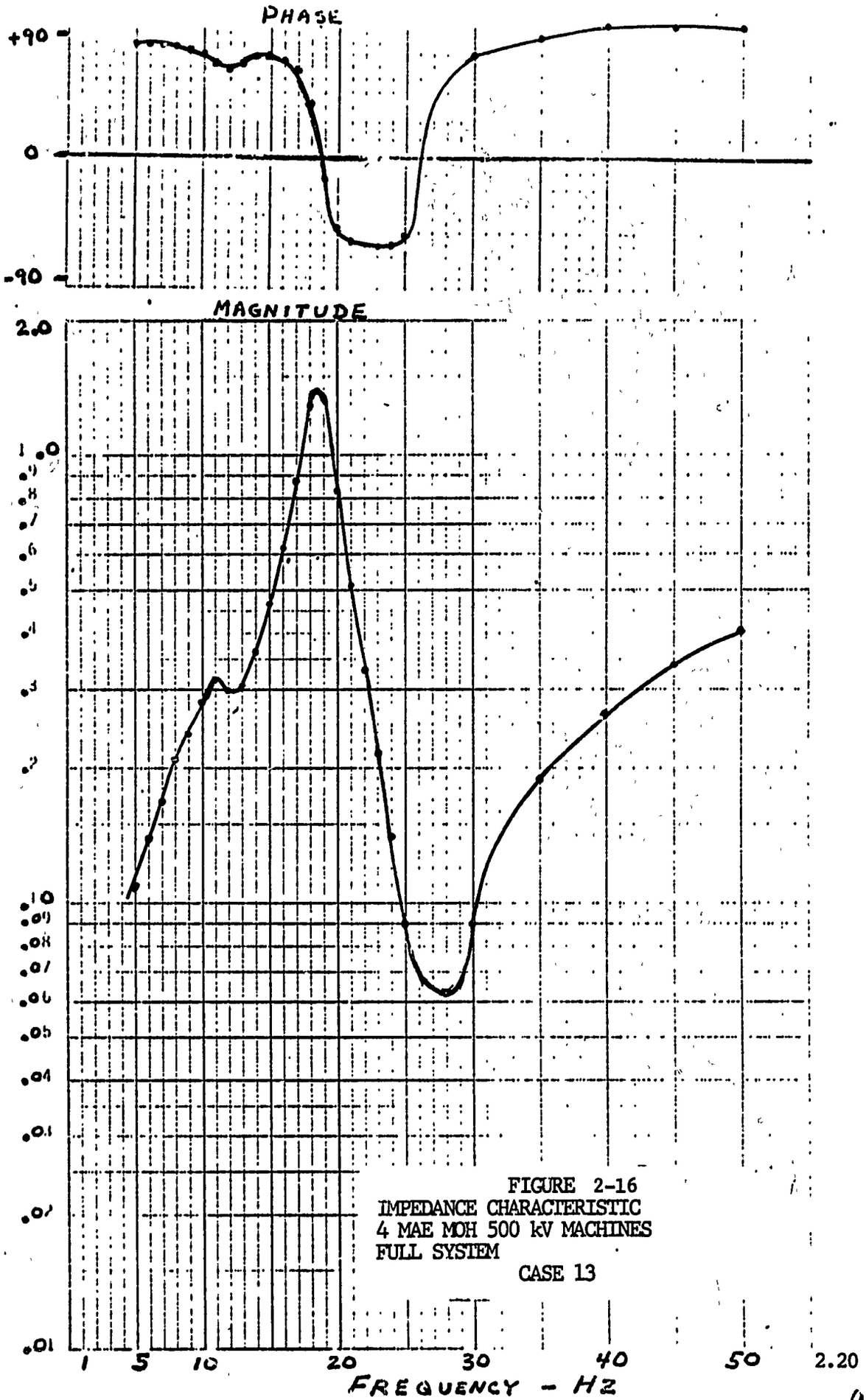

FIGURE 2-16
IMPEDANCE CHARACTERISTIC
4 MAE MOH 500 kV MACHINES
FULL SYSTEM
CASE 13

2.20

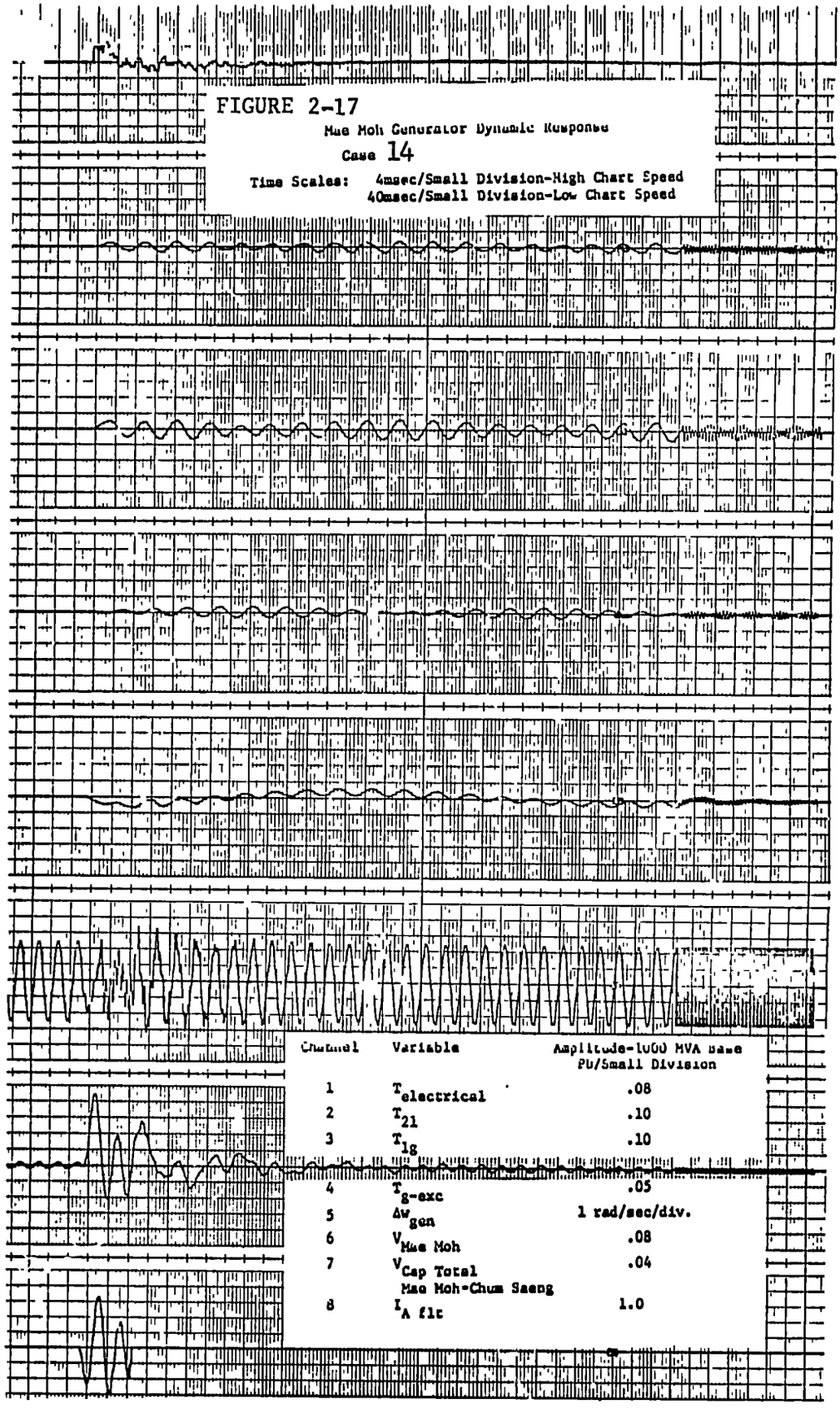

FIGURE 2-17

Mae Moh Generator Dynamic Response

Case 14

Time Scales: 4msec/Small Division-High Chart Speed
40msec/Small Division-Low Chart Speed

Channel	Variable	Amplitude-1000 MVA Base PU/Small Division
1	$T_{electrical}$	.08
2	T_{21}	.10
3	T_{1g}	.10
4	T_{g-exc}	.05
5	Δw_{gen}	1 rad/sec/div.
6	$V_{Mae\ Moh}$	.08
7	$V_{Cap\ Total}$ Mae Moh-Chum Saeng	.04
8	$I_{A\ flt}$	1.0

220

FIGURE 2-18

Mae Moh Generator Dynamic Response

Case 15

Time Scales: 4msec/Small Division-High Chart Speed
40msec/Small Division-Low Chart Speed

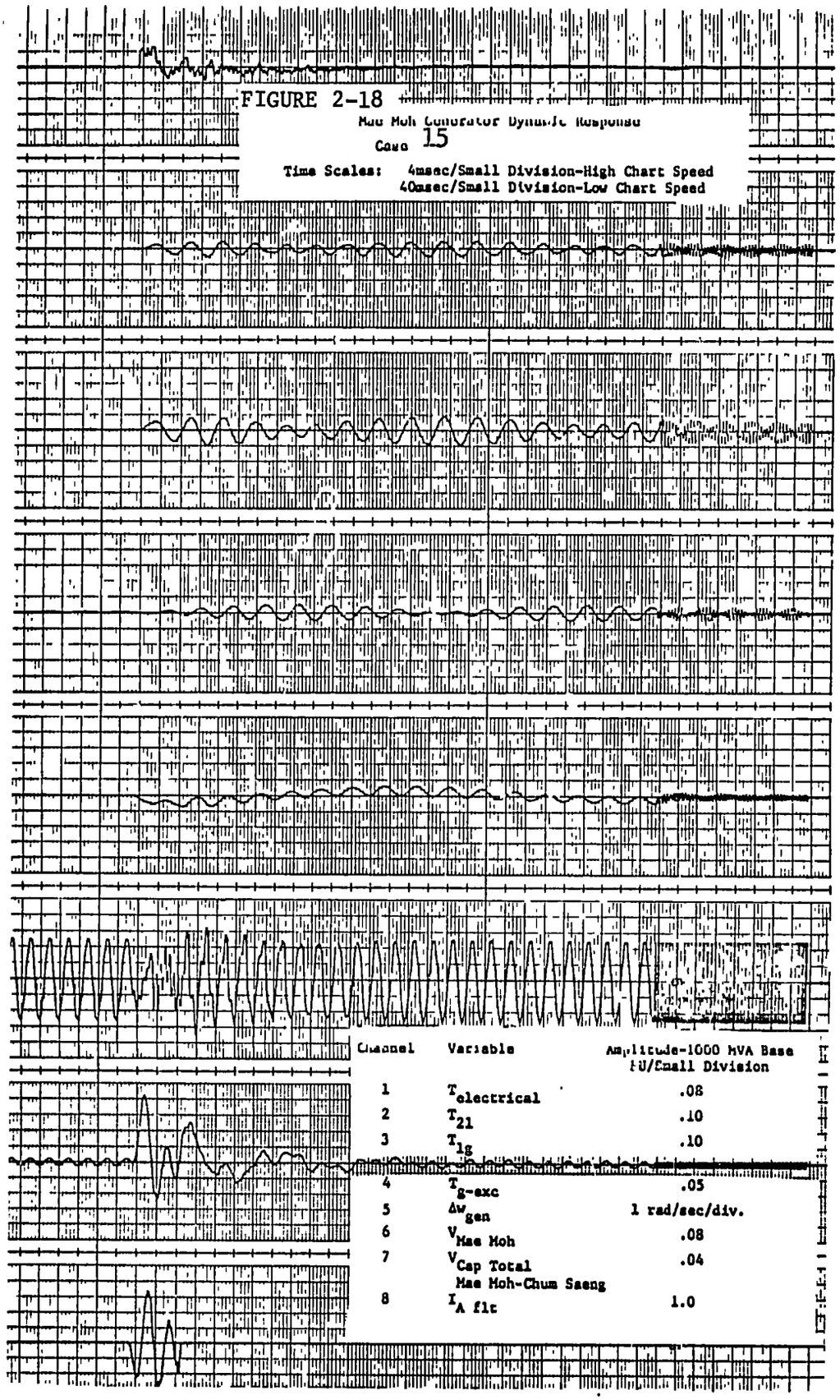

Channel	Variable	Amplitude-1000 MVA Base PU/Small Division
1	$T_{electrical}$	.08
2	T_{21}	.10
3	T_{1g}	.10
4	T_{g-exc}	.05
5	Δw_{gen}	1 rad/sec/div.
6	$V_{Mae\ Moh}$	.08
7	$V_{Cap\ Total}$ Mae Moh-Chum Saeng	.04
8	$I_{A\ flt}$	1.0

221

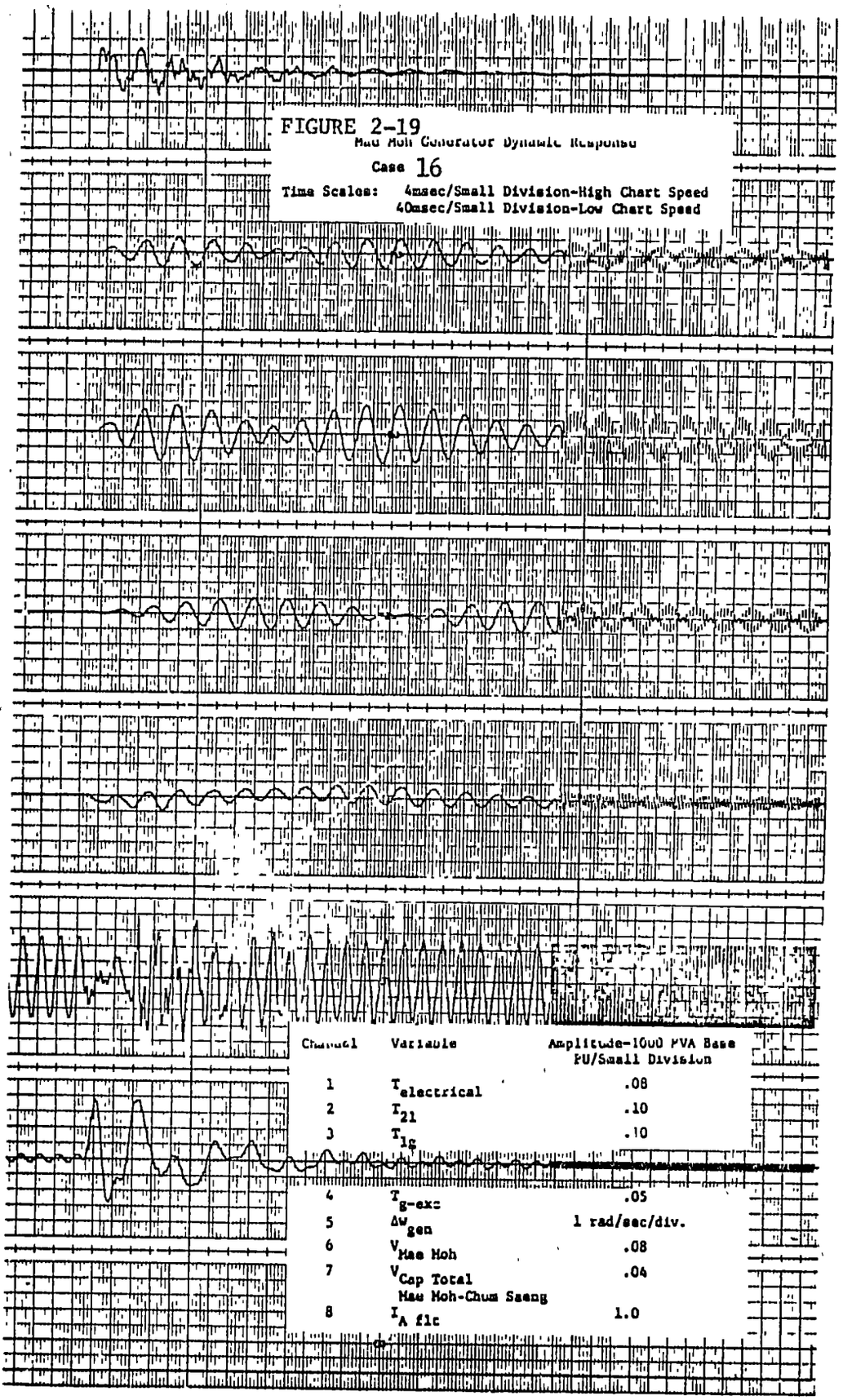

FIGURE 2-19

Mae Moh Generator Dynamic Response

Case 16

Time Scales: 4msec/Small Division-High Chart Speed
40msec/Small Division-Low Chart Speed

Channel	Variable	Amplitude-1000 MVA Base PU/Small Division
1	$T_{electrical}$	.08
2	T_{21}	.10
3	T_{1g}	.10
4	T_{g-exc}	.05
5	Δw_{gen}	1 rad/sec/div.
6	$V_{Mae\ Moh}$	.08
7	$V_{Cap\ Total}$ Mae Moh-Chum Saeng	.04
8	$I_{A\ flt}$	1.0

222

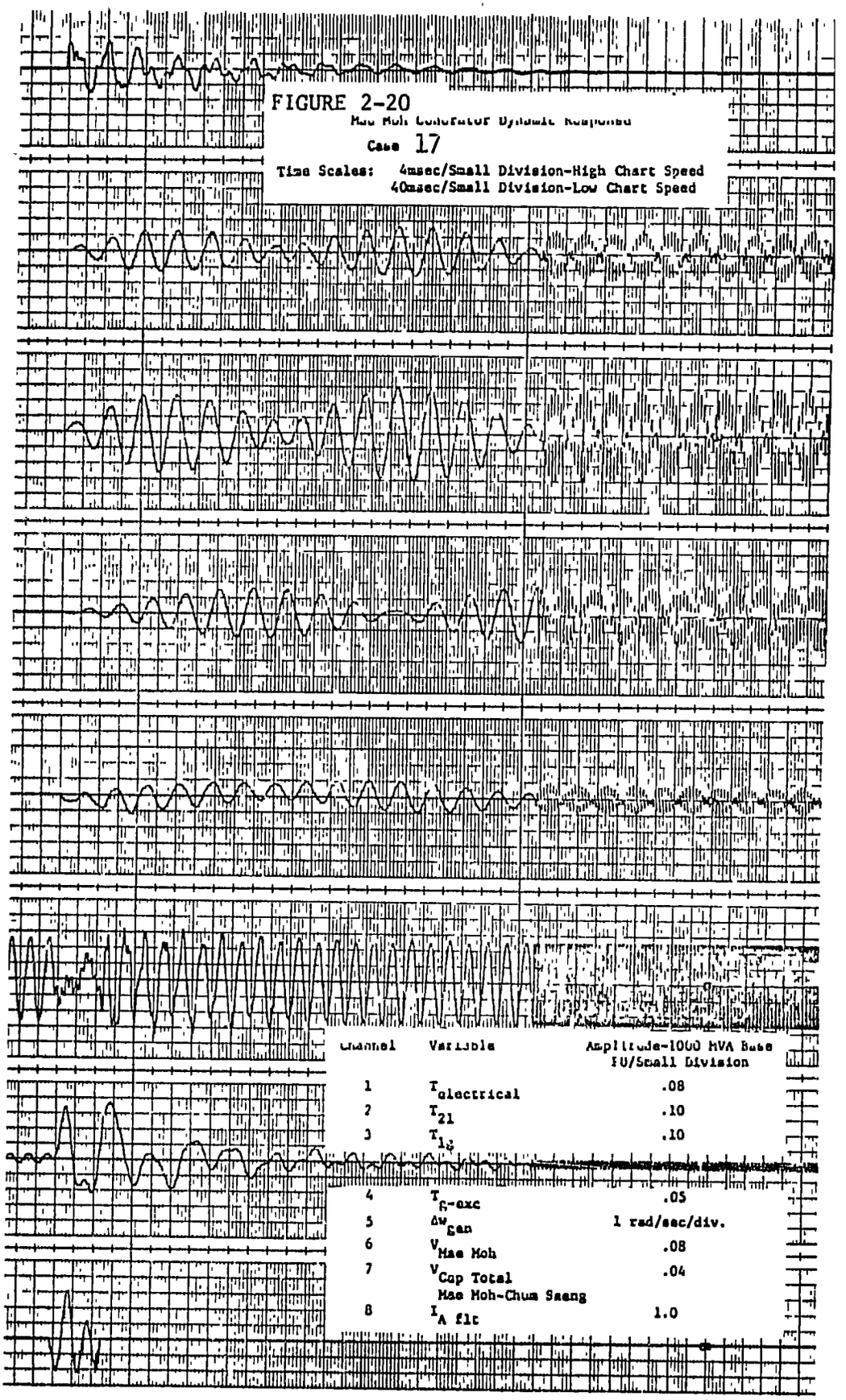

FIGURE 2-20

Mae Moh Generator Dynamic Response

Case 17

Time Scales: 4msec/Small Division-High Chart Speed
40msec/Small Division-Low Chart Speed

Channel	Variable	Amplitude-1000 MVA Base PU/Small Division
1	$T_{electrical}$	.08
2	T_{21}	.10
3	T_{13}	.10
4	T_{G-exc}	.05
5	Δw_{gen}	1 rad/sec/div.
6	$V_{Mae\ Moh}$	.08
7	$V_{Cap\ Total}$	.04
8	Mae Moh-Chum Saeng $I_{A\ flt}$	1.0

223

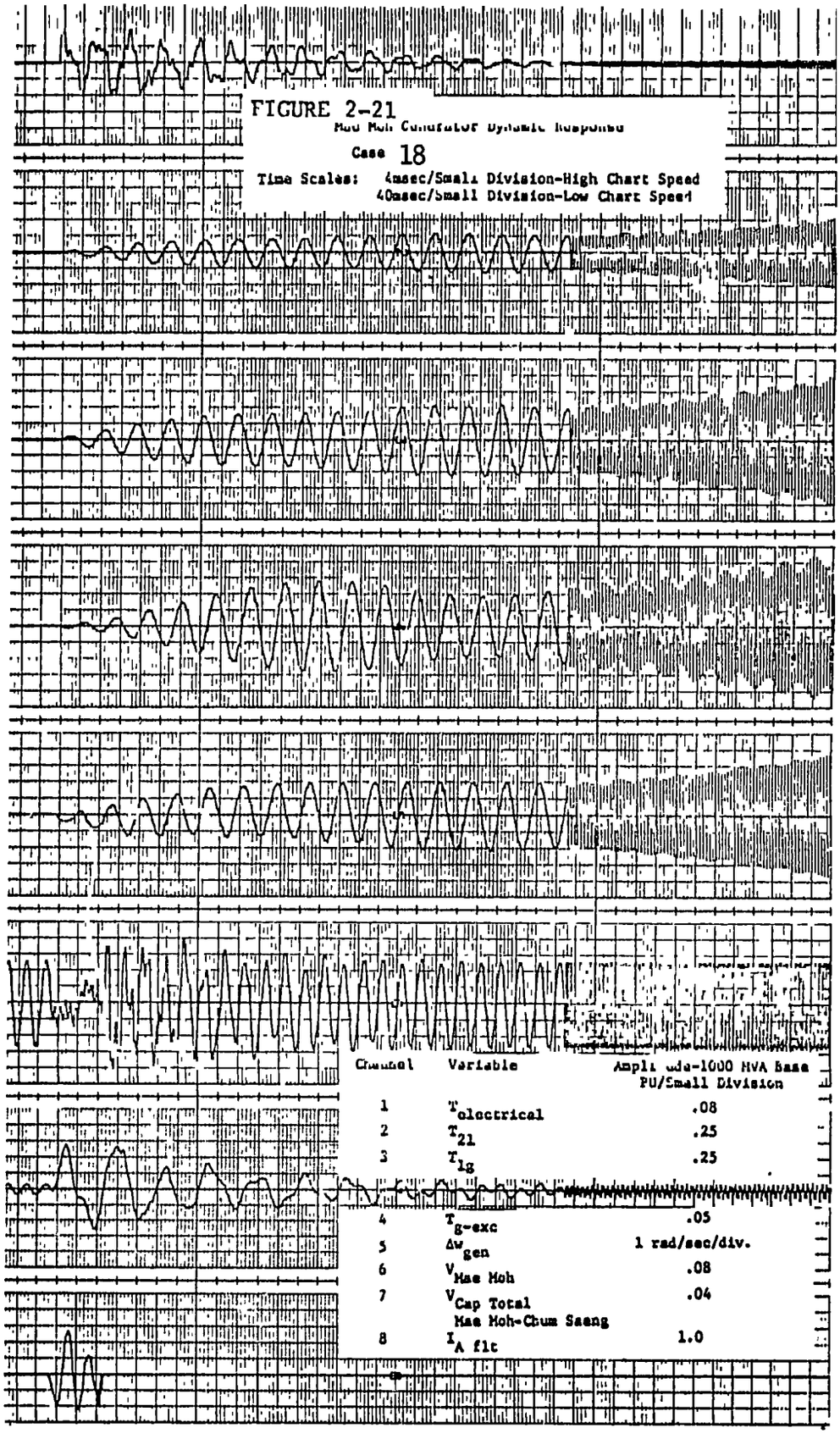

FIGURE 2-21

Mae Moh Generator Dynamic Response

Case 18

Time Scales: 4msec/Small Division-High Chart Speed
40msec/Small Division-Low Chart Speed

Channel	Variable	Amplitude-1000 MVA Base PU/Small Division
1	$T_{electrical}$	.08
2	T_{21}	.25
3	T_{1g}	.25
4	T_{g-exc}	.05
5	Δw_{gen}	1 rad/sec/div.
6	$V_{Mae\ Moh}$	.08
7	$V_{Cap\ Total}$ Mae Moh-Chum Saeng	.04
8	$I_{A\ flt}$	1.0

224

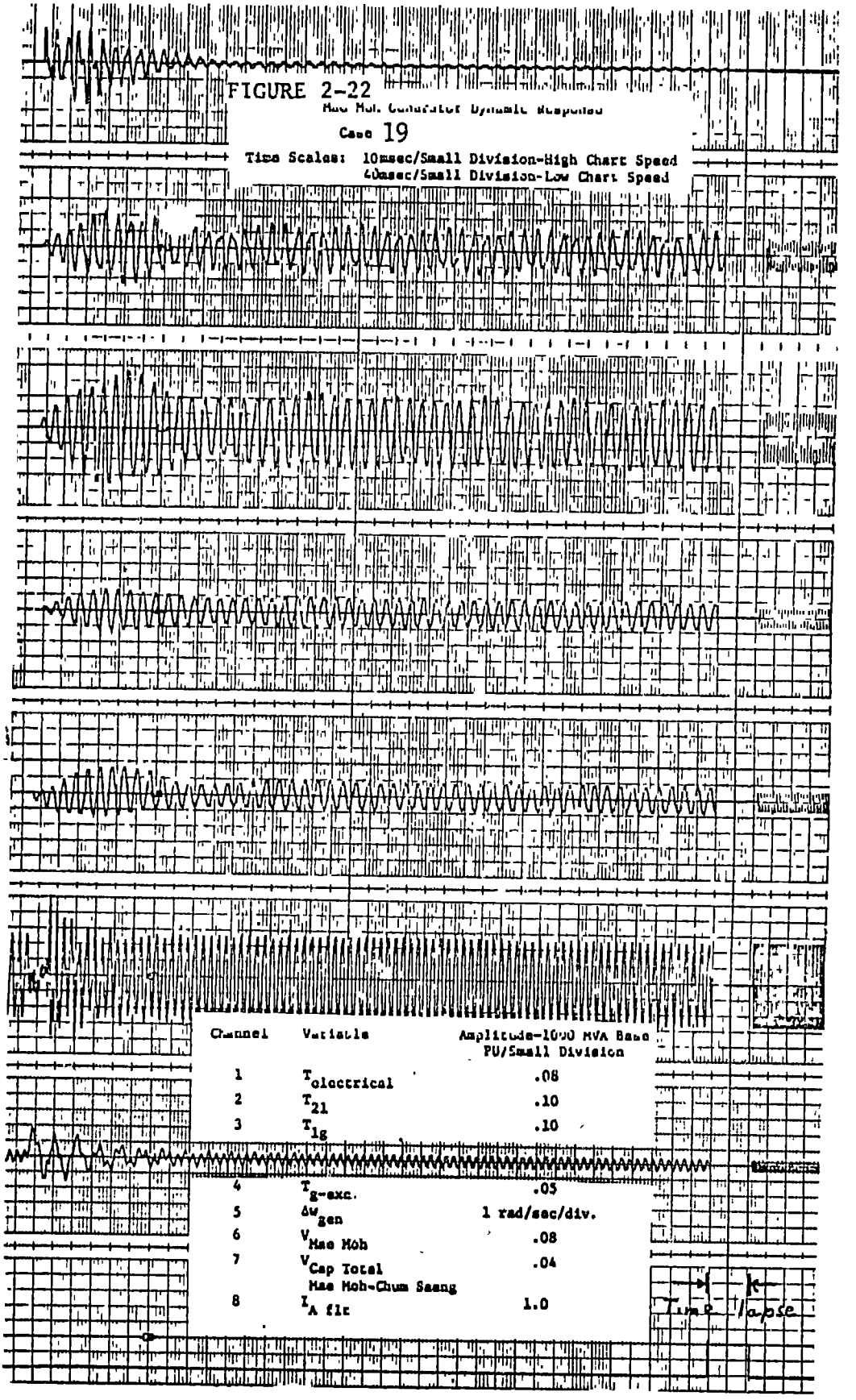

FIGURE 2-22

Mae Moh Generator Dynamic Response

Case 19

Time Scales: 10msec/Small Division-High Chart Speed
40msec/Small Division-Low Chart Speed

Channel	Variable	Amplitude-1000 MVA Base PU/Small Division
1	$T_{electrical}$	.08
2	T_{21}	.10
3	T_{1g}	.10
4	$T_{g-exc.}$	.05
5	$\Delta\omega_{gen}$	1 rad/sec/div.
6	$V_{Mae\ Moh}$	.08
7	$V_{Cap\ Total}$ Mae Moh-Chum Saeng	.04
8	$I_{A\ flt}$	1.0

225

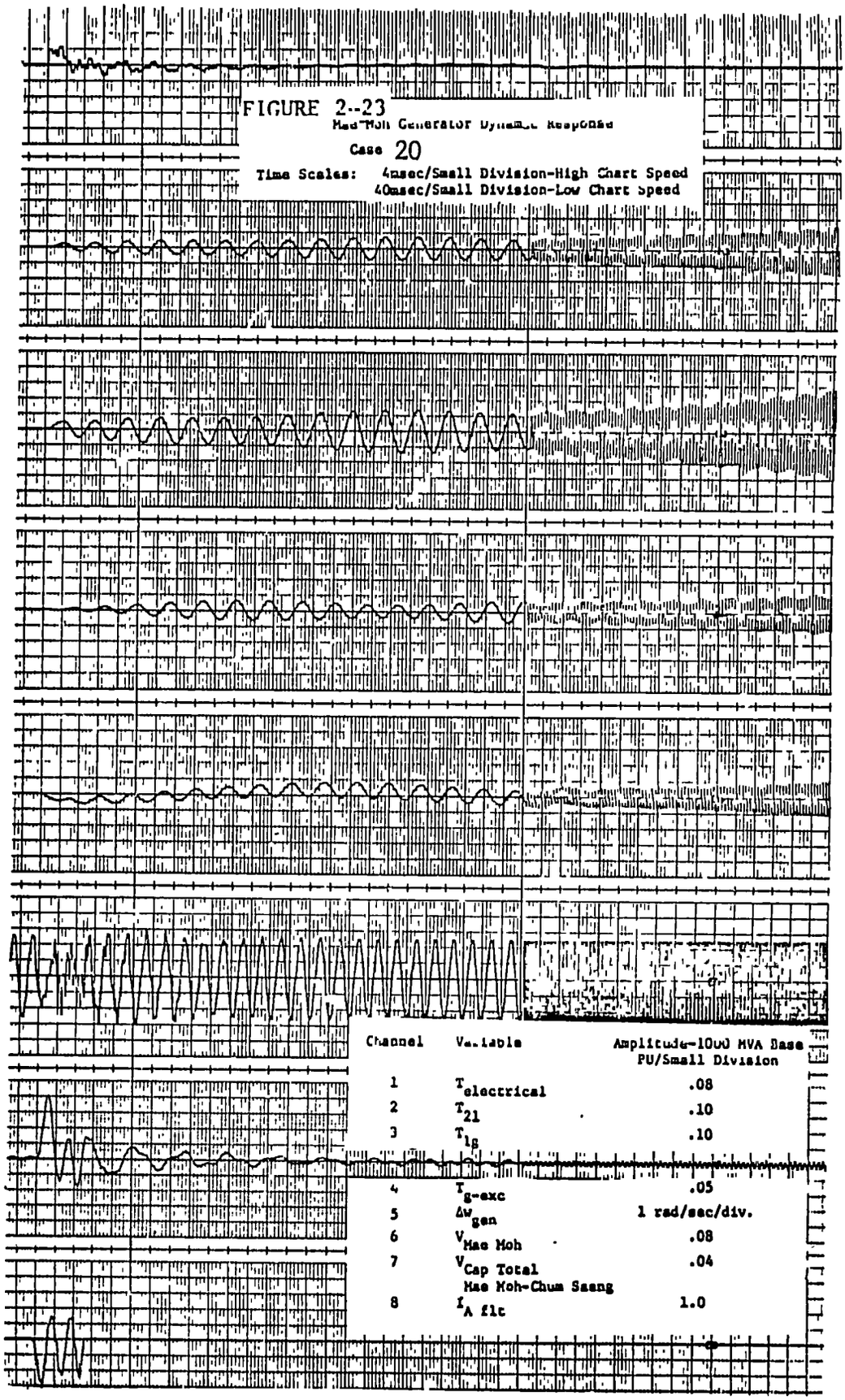

FIGURE 2--23
Mae Moh Generator Dynamic Response

226

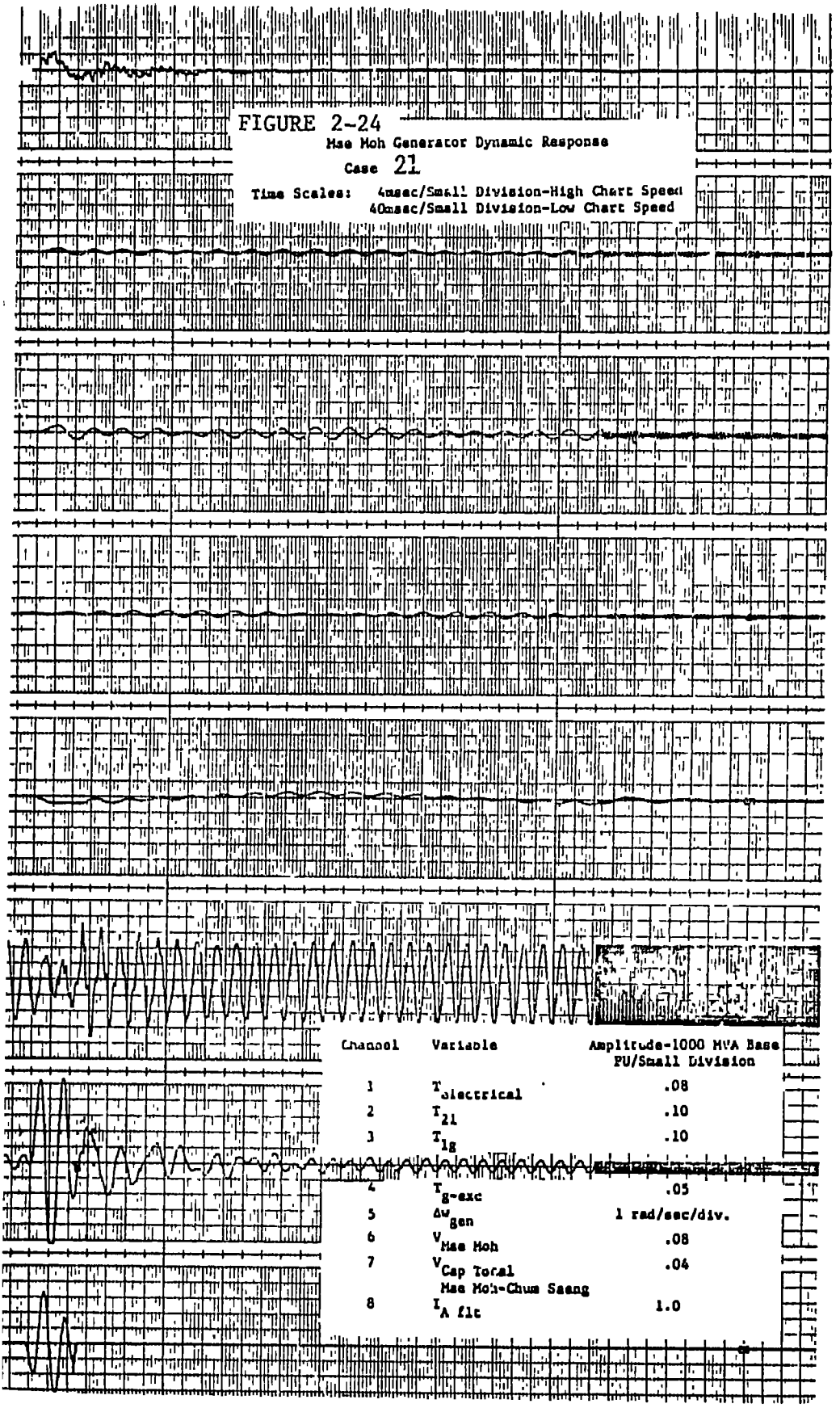

FIGURE 2-24

Mae Moh Generator Dynamic Response

Case 21

Time Scales: 4msec/Small Division-High Chart Speed
40msec/Small Division-Low Chart Speed

Channel	Variable	Amplitude-1000 MVA Base PU/Small Division
1	$T_{electrical}$	.08
2	T_{21}	.10
3	T_{1g}	.10
4	T_{g-exc}	.05
5	$\Delta\omega_{gen}$	1 rad/sec/div.
6	$V_{Mae\ Moh}$	.08
7	$V_{Cap\ Total}$	.04
8	$I_{A\ flt}$ Mae Moh-Chum Saeng	1.0

227

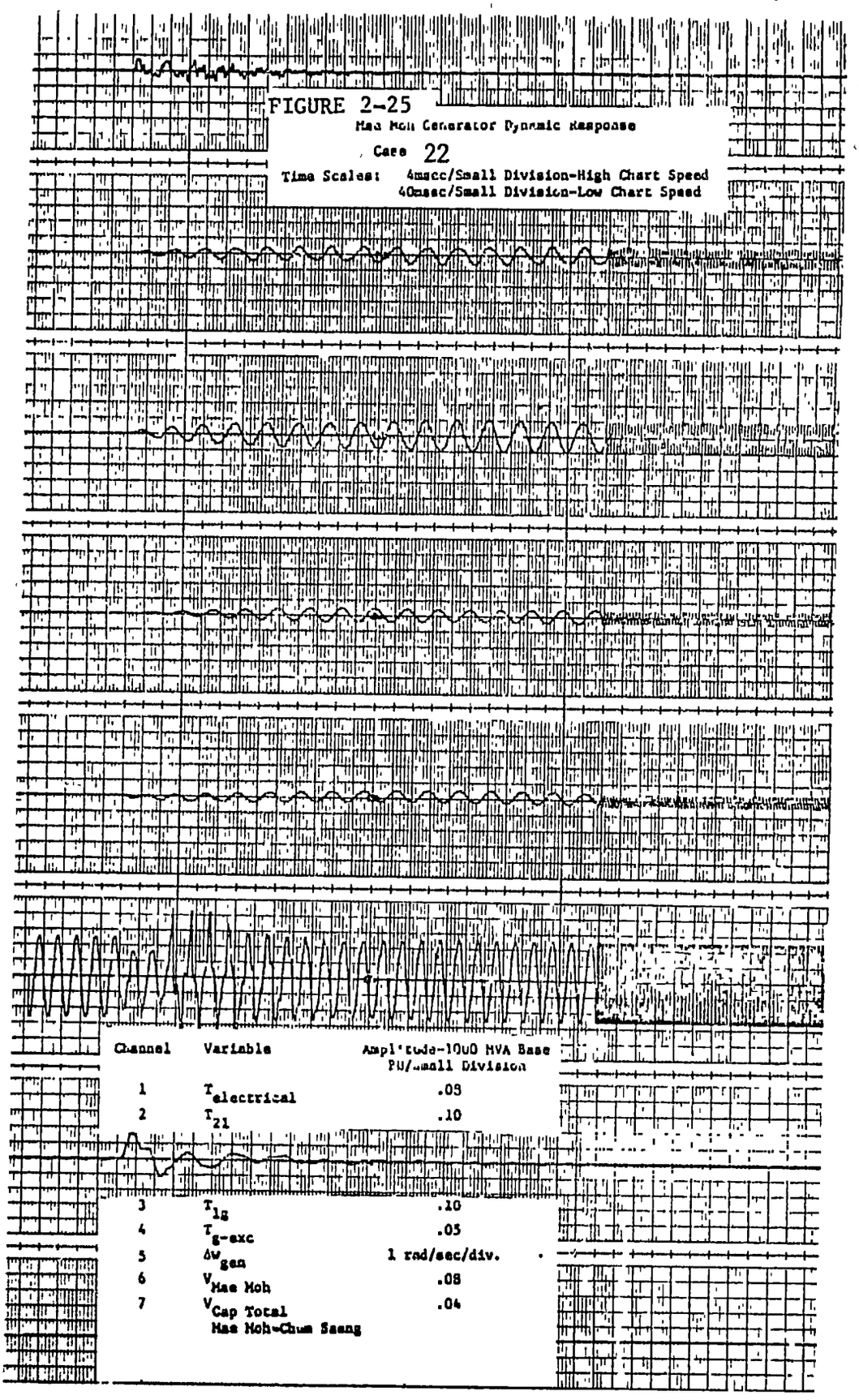

FIGURE 2-25

Mae Moh Generator Dynamic Response

Case 22

Time Scales: 4msec/Small Division-High Chart Speed
40msec/Small Division-Low Chart Speed

Channel	Variable	Amplitude-1000 MVA Base PU/Small Division
1	$T_{electrical}$	.08
2	T_{21}	.10
3	T_{1g}	.10
4	T_{g-exc}	.05
5	Δw_{gen}	1 rad/sec/div.
6	$V_{Mae\ Moh}$	.08
7	$V_{Cap\ Total}$ Mae Moh-Chum Saeng	.04

228

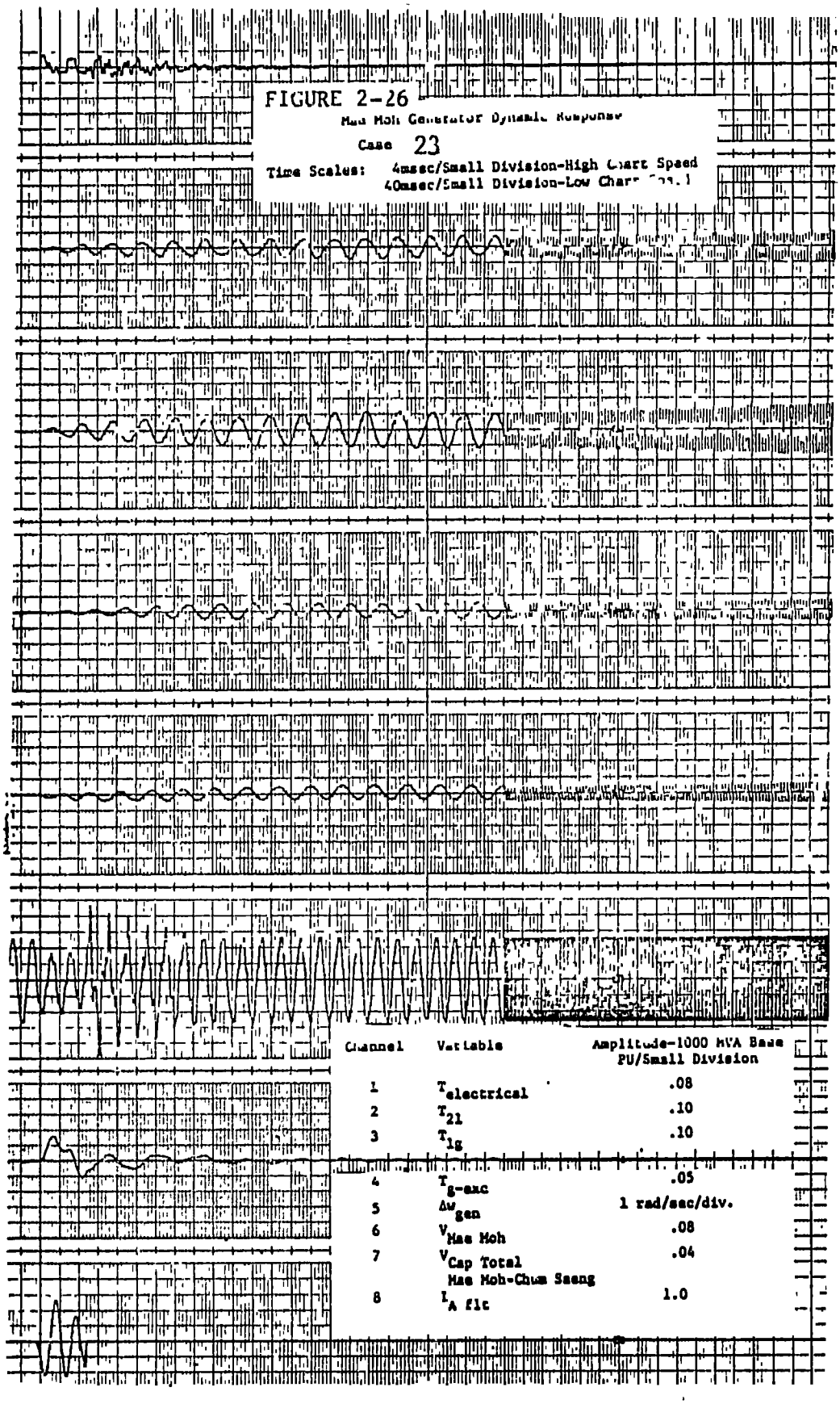

FIGURE 2-26

Mae Moh Generator Dynamic Response

Case 23

Time Scales: 4msec/Small Division-High Chart Speed
40msec/Small Division-Low Chart Speed

Channel	Variable	Amplitude-1000 MVA Base PU/Small Division
1	$T_{electrical}$	.08
2	T_{21}	.10
3	T_{1g}	.10
4	T_{g-exc}	.05
5	$\Delta\omega_{gen}$	1 rad/sec/div.
6	$V_{Mae\ Moh}$	.08
7	$V_{Cap\ Total}$ Mae Moh-Chum Saeng	.04
8	$I_{A\ flt}$	1.0

229

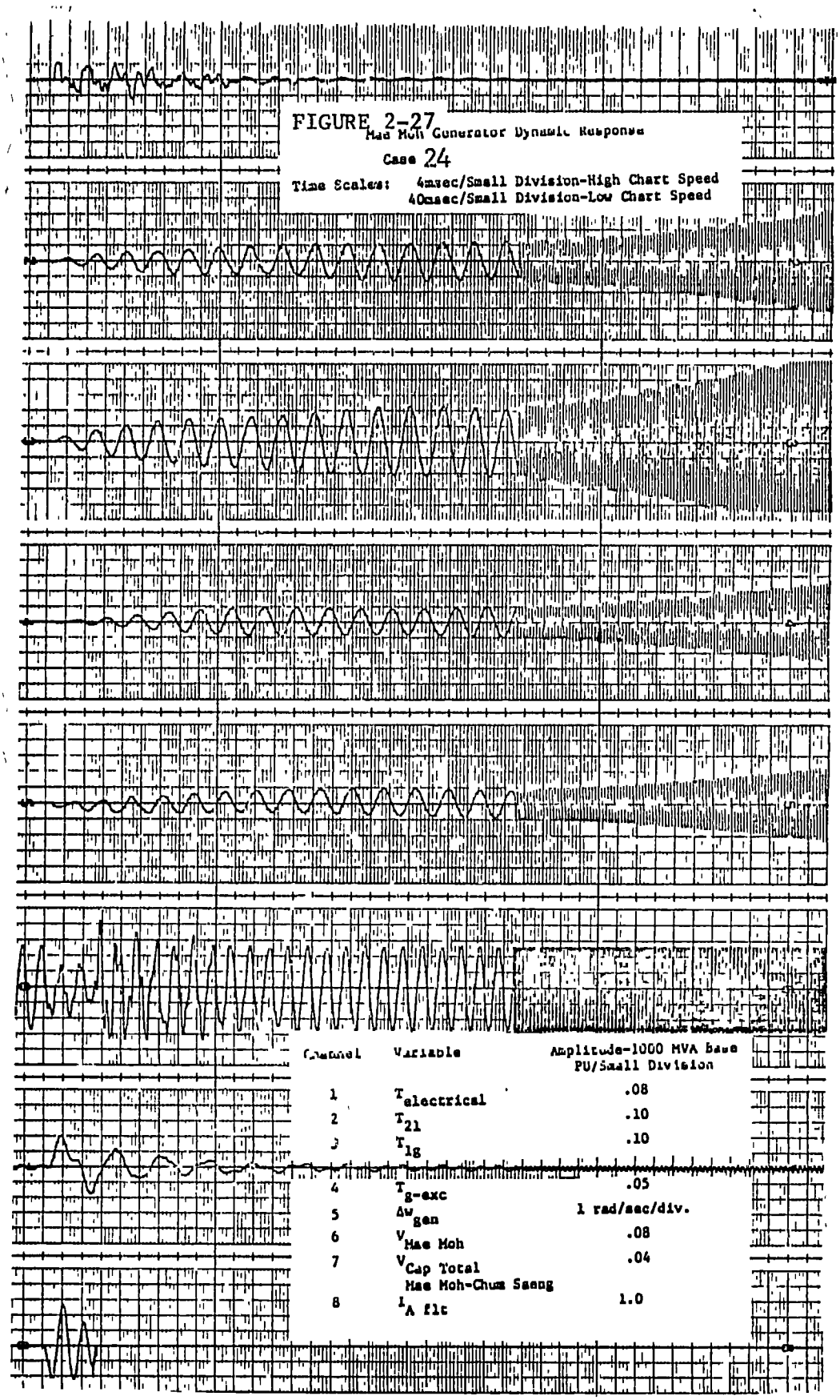

FIGURE 2-27
Mae Moh Generator Dynamic Response
Case 24
Time Scales: 4msec/Small Division-High Chart Speed
40msec/Small Division-Low Chart Speed

Channel	Variable	Amplitude-1000 MVA Base PU/Small Division
1	$T_{electrical}$	.08
2	T_{21}	.10
3	T_{1g}	.10
4	T_{g-exc}	.05
5	Δw_{gen}	1 rad/sec/div.
6	$V_{Mae\ Moh}$	.08
7	$V_{Cap\ Total}$ Mae Moh-Chum Saeng	.04
8	$I_{A\ flt}$	1.0

230

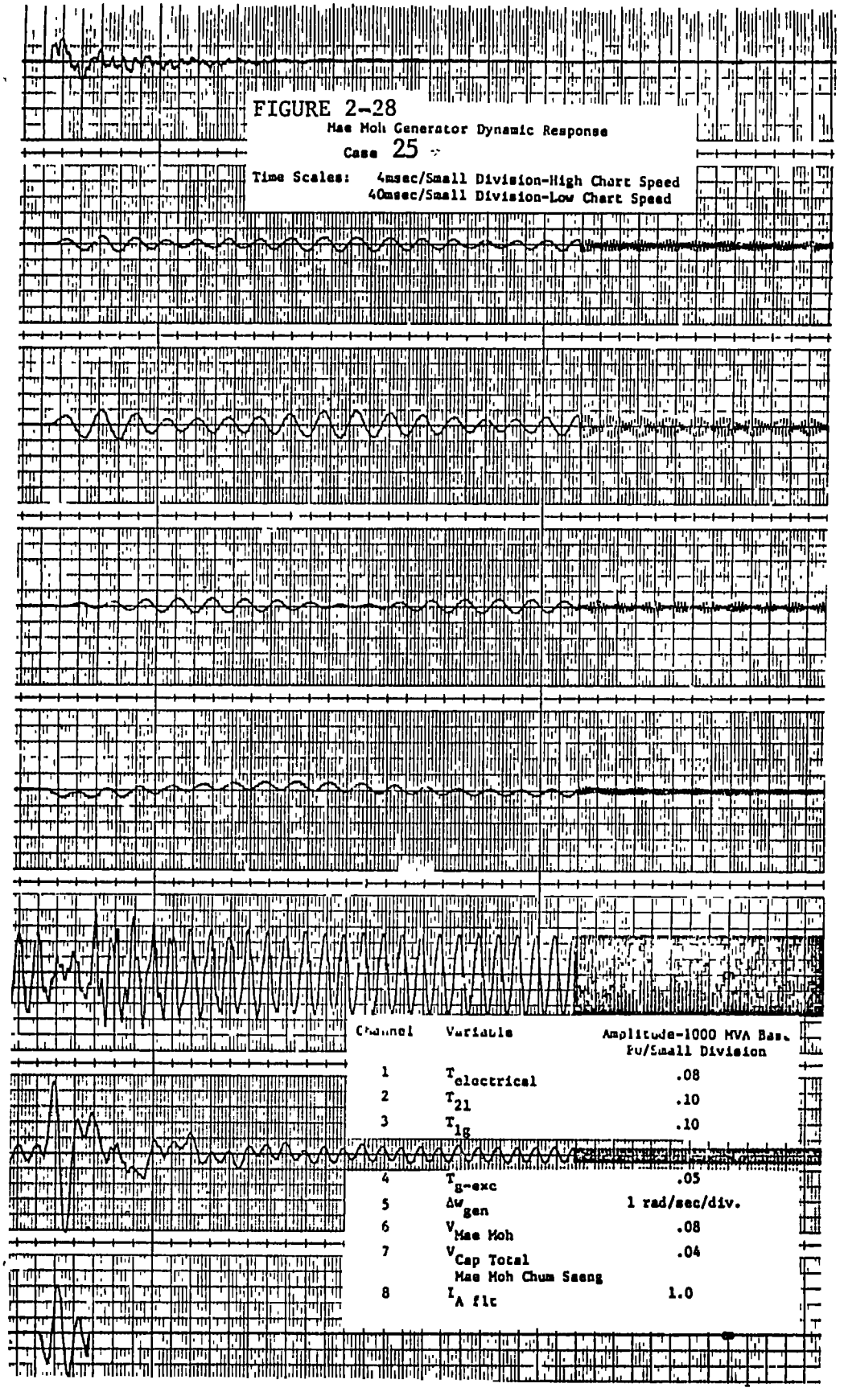

FIGURE 2-28

Mae Moh Generator Dynamic Response

Case 25

Time Scales: 4msec/Small Division-High Chart Speed
40msec/Small Division-Low Chart Speed

Channel	Variable	Amplitude-1000 MVA Base Pu/Small Division
1	$T_{electrical}$	.08
2	T_{21}	.10
3	T_{1g}	.10
4	T_{g-exc}	.05
5	$\Delta\omega_{gen}$	1 rad/sec/div.
6	$V_{Mae\ Moh}$	.08
7	$V_{Cap\ Total}$ Mae Moh Chum Saeng	.04
8	$I_{A\ flt}$	1.0

231

3.0 APPENDIX 3 - ELECTRICAL ENVIRONMENTAL CONSIDERATIONS

3.1 Introduction

This section discusses electrical environmental effects considered in (i) design of 500 kV and 400 kV transmission line structures and optimum right-of-way widths for use in comparative analysis of transmission alternates between Mae Moh to Chum Saeng to Min Buri; and (ii) preliminary design of 500 kV transmission line structure.

3.2 Electrical Environmental Effects

Electrical environmental effects of EHV transmission lines include the following:

3.2.1 Power Frequency Field Effects

- Electric Field
- Magnetic Field

3.2.2 Corona Generated Effects

- Radio Interference (RI)
- Television Interference (TVI)
- Audible Noise Emission
- Ozone Emission

Of these, the magnetic field and ozone emission levels produced by EHV lines are negligible and hence are excluded from detailed evaluation in both comparative and preliminary line design studies. Also, since TVI produced by corona discharges is proportional to RI, it is not considered in these studies. Thus, only the electric field effects, RI, and audible noise emission levels are considered.

3.3 Comparative Analysis of 500 kV and 400 kV Transmission Alternates

3.3.1 Criteria

In order to compare the cost of constructing 500 kV and 400 kV transmission line alternates, it is necessary that these lines by designed for the same electrical environmental and structural criteria. Towards this

end, the following criteria was established:

- Maximum Electric Field = 8 kV/m and Minimum Electric Field = 3 kV/m.
- At the edge of the right-of-way, fair weather RI = 40 dB above 1 μV/m.
- At the edge of the right-of-way, wet conductor audible noise level = 55 dB (A).
- Conductor blow out criteria as per 1977 National Electrical Safety Code (NESC).

3.3.2 Structure Configurat

The 500 kV vertical structure recommended by EGAT (Reference 2) was used; two bundle conductor sizes (4 x 1.1092" 'Condor' conductor and 3 x 1.345" 'Bittern' conductor) were considered. Figure 9-3 in Volume II - Final Report shows the double circuit 500 kV vertical structure used in this study with both bundle conductors.

3.3.3 Analysis of Electrical Effects

Computer programs developed by SHAH & ASSOCIATES, INC., were used to calculate electric field, fair weather RI, wet conductor audible noise levels, and right-of-way widths of (i) 500 kV double circuit line with 4 x 1.1092" 'Condor' and 3 x 1.345" 'Bittern' conductors, (ii) double circuit 400 kV line with 2 x 1.1092" 'Condor' and 2 x 1.345" 'Bittern' conductors, and (iii) single circuit 400 kV line with 2 x 1.1092" 'Condor' and 2 x 1.345" 'Bittern' conductors.

3.3.3.1 Right-of-Way Width Requirements of Double Circuit 500 kV Transmission Line

The minimum conductor to ground clearance of 42 feet would result in 8 kV/m electric field for 500 kV double circuit line if phasing configurations, ABC-ACB for 4 x 1.1092" 'Condor' conductor and ABC-ACB for 3 x 1.345" 'Bittern' conductors are used. The right-of-way width required for 1200 feet span length was determined to meet the criteria specified in 3.3.1. Table 3.1 gives the right-of-way width requirements for both 'Condor' and 'Bittern' conductors.

3.3.3.2 Right-of-Way Width Requirements of Double Circuit 400 kV Transmission Line

Table 3-2 gives the right-of-way width requirements of both 2 x 1.345" 'Bittern' and 2 x 1.1092" 'Condor' conductors for the criteria specified in 3.3.1. The minimum conductor to ground clearance was determined to be about 29 feet.

3.3.3.3 Right-of-Way Width Requirements of Single Circuit 400 kV Transmission Line

The minimum conductor-to-ground clearance of 30 feet for the single phase horizontal configuration would give maximum electric field of 8 kV/m. Table 3-3 and 3-4 give right-of-way width requirements for 'Bittern' and 'Condor' conductors.

3.4 Electrical Environmental Effects of Preliminary 500 kV Transmission Line Design

Economic analysis discussed in Section 7 established the 500 kV as the optimum transmission voltage level for the Mae Moh to Chum Saeng to Min Buri transmission. The determination of minimum conductor-to-ground clearance, RI, audible noise emission, and right-of-way widths for the preliminary delta tower given in Figure 3-1 is discussed in this section.

3.4.1 Minimum Conductor-to-Ground Clearance

At 500 kV voltage level, let-go current level of 5.0 mA is the dominant factor in establishing the minimum conductor-to-ground clearance. As per Rule 232 of the National Electrical Safety Code (1977 Edition), (Reference 9), the minimum conductor-to-ground clearance should be determined such that the maximum short circuit current experienced by persons while contacting vehicles under the line should not exceed 5.0 mA let-go current. The determination of short-circuit currents requires knowledge of electric field gradients at ground level in close proximity of the transmission lines.

Electric field gradients are calculated by using the programs developed by SHAH & ASSOCIATES, INC. Figure 3-2 gives electric field profiles of the 500 kV tower configuration given in Figure 3-1 The maximum electric field produced by double circuit delta towers is about 10.30 kV/m. The worst case short circuit current that can be obtained while contacting

rge gasoline trucks (8' x 10.5' x 50') located in 10.3 kV/m electric field 5.0 mA. Hence, the minimum conductor-to-ground clearance for tower given Figure 3-1 is determined to be 34 feet. Also, the horizontal clearances pend upon switch surge levels, weather parameters, and pollution nditions. The detailed studies must be undertaken to optimize various ne clearances with respect to the environment.

4.2 Radio Interference

The fair weather radio interference levels produced by 500 kV wer configuration given in Figure 3-1 is plotted in Figure 3-4 for 1600 et span length. RI program developed by SHAH & ASSOCIATES, INC., was used compute fair weather radio noise levels. The evaluation of impact of the gh frequency interference to communication facilities is beyond the scope this investigation. However, such a study should be made prior to final lection of transmission line route.

4.3 Audible Noise Emission

The wet conductor audible noise levels produced by 500 kV tower nfiguration given in Figure 3-1 is plotted in Figure 3-4 for 1600 feet an length. Audible noise program developed by SHAH & ASSOCIATES, INC., s used to compute audible noise emission levels.

4.4 Right-of-Way Width Requirements

Table 3-5 gives right-of-way width requirements of the tower nfiguration given in Figure 3-1 for the criteria specified. It is seen at the right-of-way widths required by radio noise and electric field vels are higher than conductor blow out criteria. The shock problems used by higher electric fields can be mitigated by undertaking 'grounding ogram'. Also, interference to the radio and TV signals caused by gh-frequency interference can be mitigated. Hence, it is recommended that e right-of-way width based on conductor blow out condition be used. Table 6 gives the radio noise, audible noise and electric field levels at the ge of the right-of-way.

5 Conclusions

Electric field, fair weather radio noise and audible noise levels oduced at the edge of the right-of-way by the proposed preliminary line signs given in Figure 3-1 is acceptable.

235

The maximum electric field gradient required to limit the short circuits current to 5.0 mA depends upon the permissible vehicle size.

Hence, the maximum electric field determines minimum conductor-to-ground clearance at 500 kV voltage level. Studies must be undertaken before final design is selected to determine appropriate line clearances over roads, highways, farm lands, residential areas, etc.

Before final line route is selected, a detailed high-frequency interference study must be undertaken to avoid interference to sensitive military installations and radio and TV transmitters.

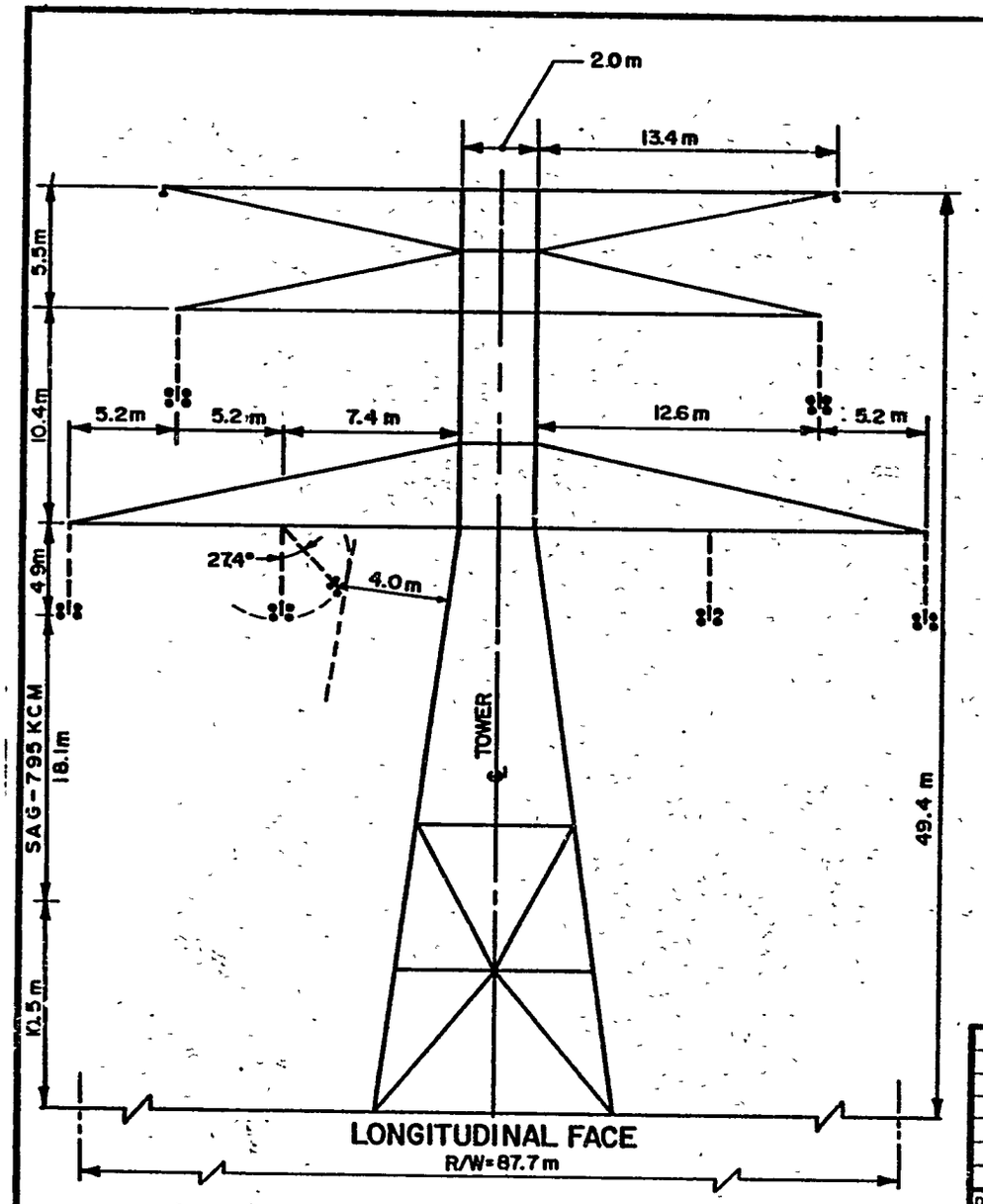

FIGURE 3-1

REV.	DATE	BY

HEMCO ENGINEERS, INC. consultants
SAINT LOUIS, MISSOURI
A SUBSIDIARY OF THE L E MYERS CO

ELECTRIC GENERATION AUTHORITY OF THAILAND

DELTA CONFIGURED
DOUBLE CIRCUIT
500 kV
BASE TOWER

DWN.	CKD.	APP.	SCALE	CONT. NO.	DWG. NO.	SHEET NO.	REV.
MPP 12/22/80	JS 12/22/80	/ /	NONE	21910	219-B-10001	3 of 3	0

FIGURE 3-2 ELECTRIC FIELD LATERAL PROFILE OF D/C 500 kV LINE GIVEN IN FIGURE 3-1

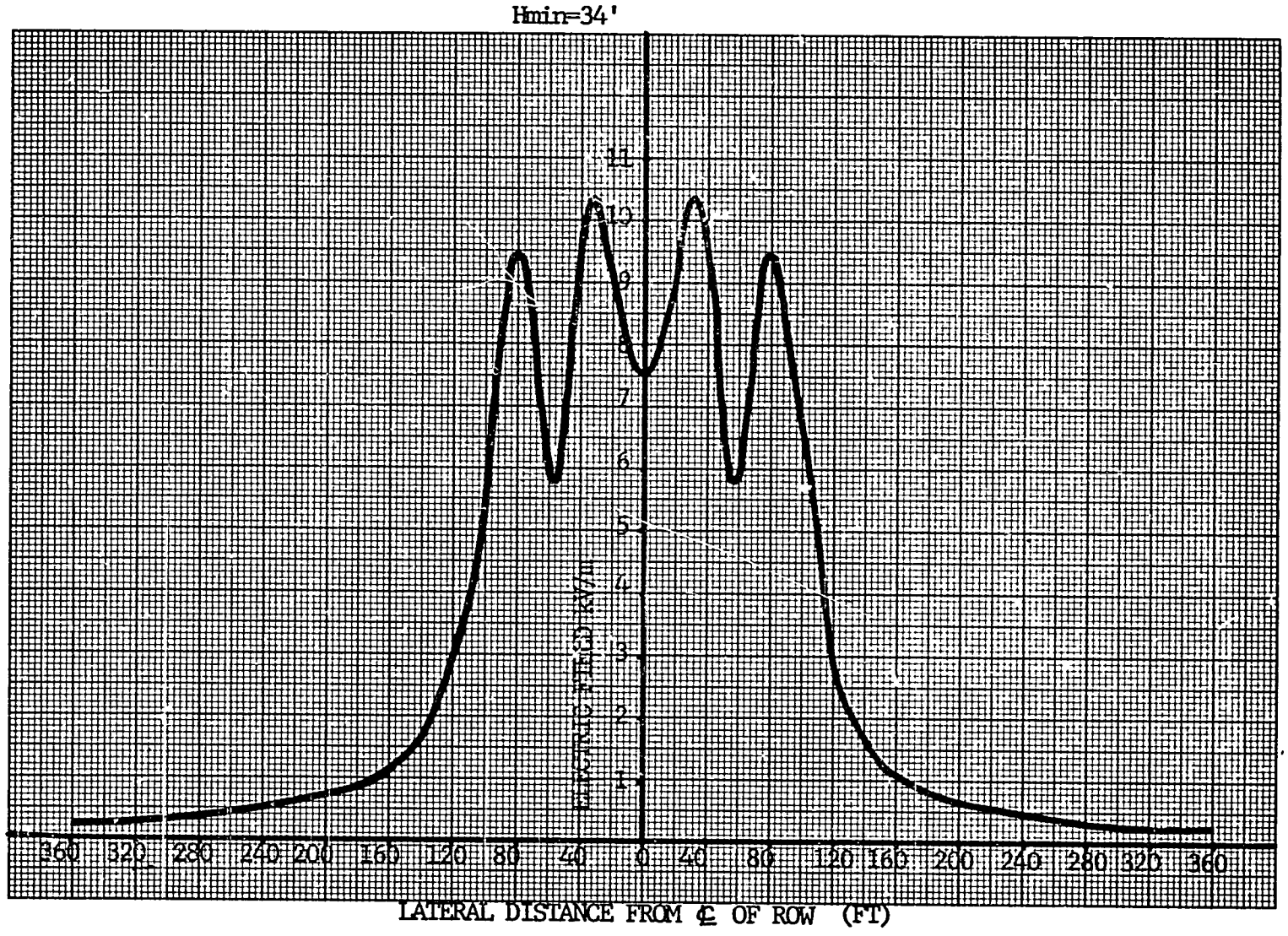

234

FIGURE 3-3 FAIR WEATHER RADIO NOISE LATERAL PROFILE OF D/C 500 kV LINE GIVEN IN FIGURE 3-1

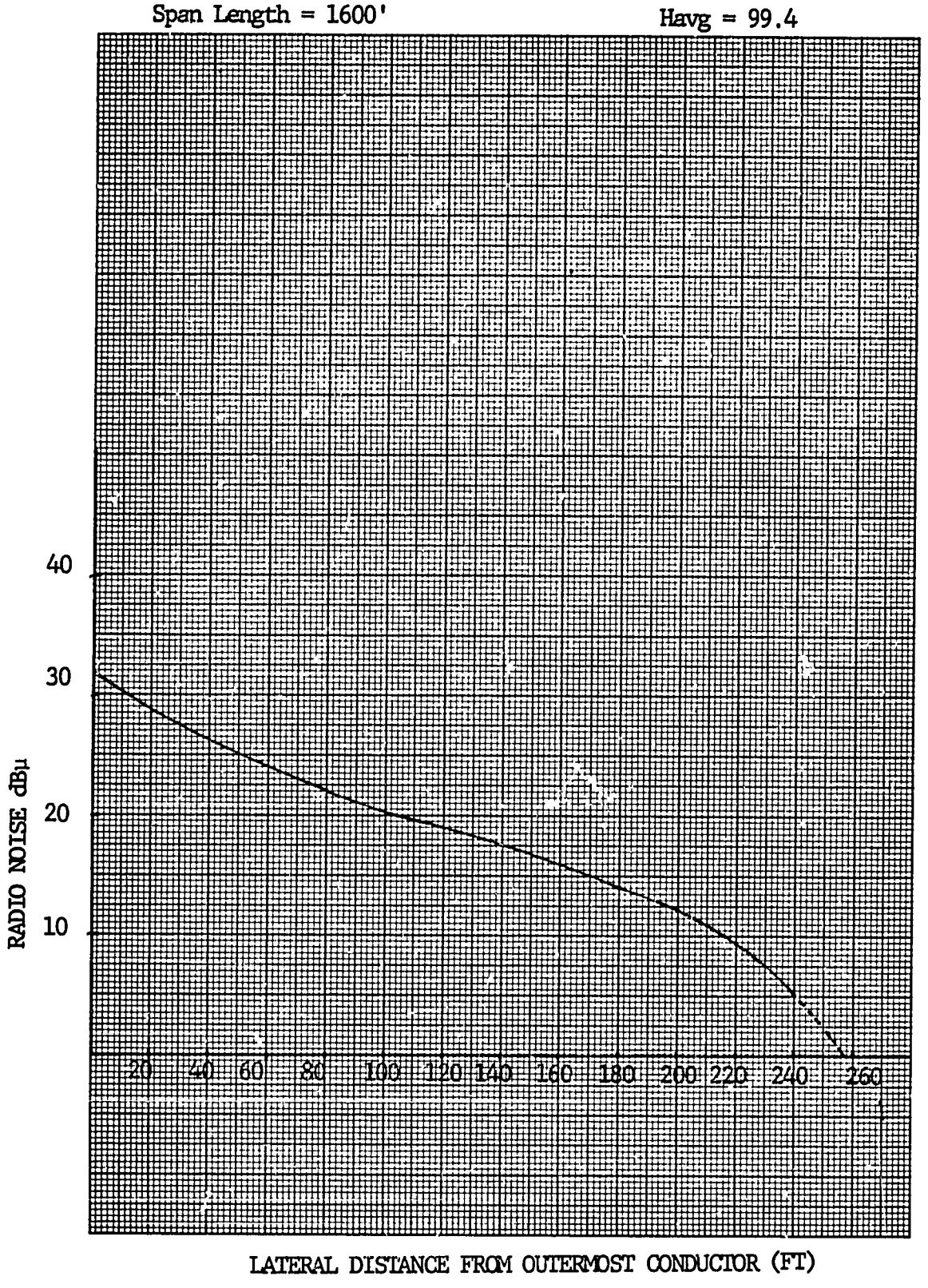

239

FIGURE 3-4 WET CONDUCTOR AUDIBLE NOISE LATERAL PROFILE OF D/C 500 kV LINE GIVEN IN FIGURE 3-1

Span Length = 1600'

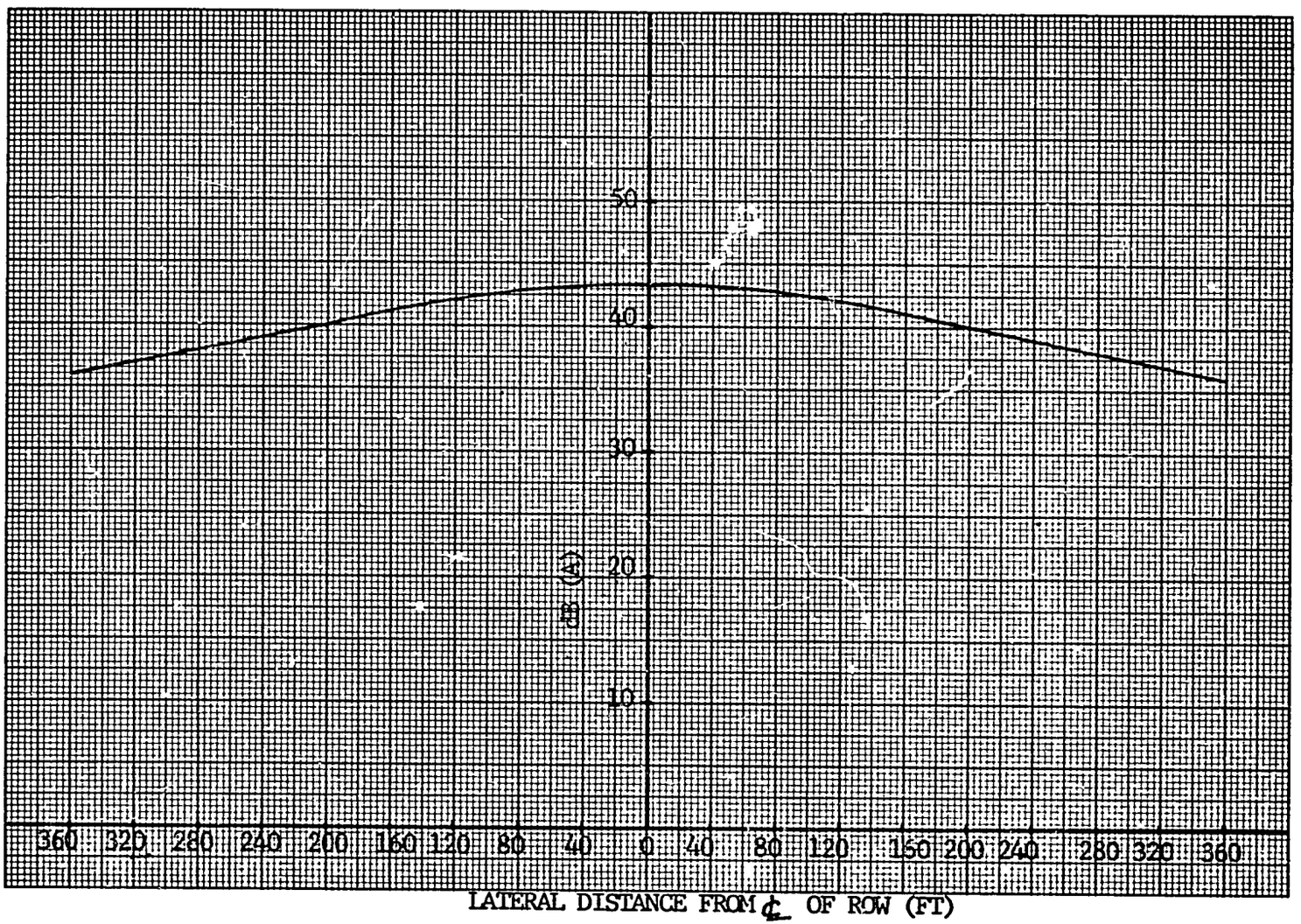

240

Form 9278

TABLE 3-5

RIGHT-OF-WAY REQUIREMENTS OF EGAT D/C 500 kV

PARAMETER	CRITERIA	ROW WIDTH REQUIREMENTS (FT)	
		3 x 1.345" BITTERN CONDUCTOR	4 x 1.092" CONDOR CONDUCTOR
Electric Field	3.0 kV/m	136	140
Fair Weather Radio Noise	40 dBμ	158	102
Audible Noise (Wet Conductor)	55 dB(A)	0	0
Conductor Blow Out	NESC	150	147

TABLE 3-6

RIGHT-OF-WAY REQUIREMENTS OF EGAT D/C 400 kV LINE

CONDUCTOR SIZE: 2 x 1.345" BITTERN

PARAMETER	CRITERIA	ROW WIDTH REQUIREMENTS (FT)		
		SPAN = 800'	SPAN = 1200'	SPAN = 1600'
Electric Field	3 kV/m	104	100	96
Radio Noise	40 dBμ	168	156	136
Audible Noise (Wet Conductor)	55 dB(A)	0	0	0
Conductor Blow Out	NESC	115	132	153

CONDUCTOR SIZE: 2 x 1.1092" CONDOR

PARAMETER	CRITERIA	ROW WIDTH REQUIREMENTS (FT)		
		SPAN = 800'	SPAN = 1200'	SPAN = 1600'
Electric Field	3 kV/m	104	100	88
Radio Noise	40 dBμ	252	232	208
Audible Noise (Wet Conductor)	55 dB(A)	80	0	0
Conductor Blow Out	NESC	114	129	147

TABLE 3.7

ROW WIDTH DETERMINATION OF 400 kV SINGLE CIRCUIT
MAE MOH - MIN BURI TRANSMISSION LINE
CONDUCTOR SIZE: 2 x 1.345" BITTERN

PARAMETER	CRITERIA	ROW WIDTH REQUIREMENTS (FT)		
		SPAN = 800'	SPAN = 1200'	SPAN = 1600'
Electric Field	3.0 kV/m	150	150	150
Radio Noise	40 dBμ	120	68	52
Audible Noise (Wet Conductor)	55 dB(A)	0	0	0
Conductor Blow Out	$\theta_s = 35^o$	164	186	215
	$\theta_s = 25.1^o$ NESC	154	172	192

243

TABLE 3-8

ROW WIDTH DETERMINATION OF 400 kV SINGLE CIRCUIT
MAE MOH - MIN BURI TRANSMISSION LINE
CONDUCTOR SIZE: 2 x 1.092"CONDOR

PARAMETER	CRITERIA	ROW WIDTH REQUIREMENTS (FT)		
		SPAN = 800'	SPAN = 1200'	SPAN = 1600'
Electric Field	3.0 kV/m	144	144	144
Radio Noise	40 dBμ	166	148	128
Audible Noise (Wet Conductor)	55 dB(A)	0	0	0
Conductor Blow Out	$\theta_s = 35^o$	162	182	207
	$\theta_{s_{NESC}} = 25.1^o$	153	168	187

284

TABLE 3-9

RIGHT-OF-WAY WIDTH REQUIREMENT OF D/C DELTA SUSPENSION CONF.

PARAMETER	CRITERIA	ROW WIDTH REQUIREMENTS (FT)		
		SPAN = 800'	SPAN = 1200'	SPAN = 1600'
Electric Field	2 kV/m	252	252	252
	3 kV/m	240	240	240
Radio Noise Fair weather	30 dBμ	301	211	171
Audible Noise Wet Conductor	50 dB(A)	0	0	0
Conductor Swing	NESC	232	248	266

245

TABLE 3-10

ELECTRICAL EFFECTS AT THE EDGE OF ROW OF D/C 500 kV TOWER GIVEN IN FIGURE 3.1 FOR SPAN LENGTH = 1600'

PARAMETER	MAGNITUDE AT EDGE OF ROW
Electric Field	1.4 kV/m
Fair Weather Radio Noise	24 dBμ
Wet Conductor Audible Noise	42.0 dB(A)

246

4.0 APPENDIX 4 - SYSTEM COST AND ECONOMIC DATA

TABLE 4-1

In comparing each alternative transmission system we have utilized the following cost data for each system.

1980 M$

500 kV	1981	1982	1983	1984	1985	1986	1987	TOTAL
1ST 500 kV LINE	22	110	441	881	661	88	-	2203
SUBSTATION	19.0	76.0	569.6	892.4	246.8	95.0	-	1898.8
2ND 500 kV LINE	-	22	110	441	881	661	88	2203
	41	208	1120.6	2214.4	1788.8	844	88	6304.8
1995 ADDITION 538.2 FOR SUBSTATION								538.2

400 kV	1981	1982	1983	1984	1985	1986	1987	TOTAL
1ST 400 kV LINE	17.6	87.4	349.5	699	524.1	69.8	-	1747.4
SUBSTATION	17.2	69.0	516.0	808.5	223.6	86.0	-	1720.3
2ND 400 kV LINE		17.6	87.4	349.5	699	524.1	69.8	1747.4
	34.8	174.0	952.9	1857	1446.7	679.9	69.8	5215.1
	1990	1991	1992	1993	1994	1995		
3RD 400 kV LINE	17.6	87.4	349.5	699	524.1	69.8		1747.4
SUBSTATION	-	-	-	-	-	479.5		479.5
	17.6	87.4	349.5	699	524.1	549.3		2226.9

230 kV	1981	1982	1983	1984	1985	1986	1987	TOTAL
1ST D.C. 230 kV LINE	23.1	115.4	461.5	922.9	692.2	92.2	-	2307.3
SUBSTATION	8.4	33.4	250.7	392.7	108.6	41.8		835.6
2ND D.C. 230 kV LINE	-	23.1	115.4	461.5	922.9	692.2	92.2	2307.3
	31.5	171.9	827.6	1777.1	1723.7	826.2	92.2	5450.2
	1990	1991	1992	1993	1994	1995		
1ST S.C. 230 kV LINE	15.4	76.9	307.6	615.3	461.5	61.5		1538.2
SUBSTATION	-	-	-	-	-	385.9		385.9
	15.4	76.9	307.6	615.3	461.5	422.6		1924.1

247

TABLE 4-2

500 kV COST STREAM
M$ (1980)

YEAR	1ST TRANSMISSION LINE	SUBSEQUENT TRANSMISSION LINE	SUBSTATION	OPERATIONS & MAINTENANCE TRANSMISSION	OPERATIONS & MAINTENANCE SUBSTATION	PEAK LOSSES (MW)	COST OF PEAK LOSSES	ENERGY LOSSES (GWH)	COST OF ENERGY LOSSES	TOTAL
1981	22		19.0							41
1982	110	22	76.0							208
1983	441	110	569.6							1120.6
1984	881	441	892.4							2214.4
1985	661	881	246.8							1788.8
1986	88	661	95.0			10.6	17.8	57	58	919.8
1987		88		10	5.8	REFERENCE	REFERENCE	REFERENCE	REFERENCE	103.8
1988				20	7.9	REFERENCE	REFERENCE	REFERENCE	REFERENCE	27.9
1989				20	7.9	REFERENCE	REFERENCE	REFERENCE	REFERENCE	27.9
1990				20	7.9	REFERENCE	REFERENCE	REFERENCE	REFERENCE	27.9
1991				20	7.9	REFERENCE	REFERENCE	REFERENCE	REFERENCE	27.9
1992				20	7.9	REFERENCE	REFERENCE	REFERENCE	REFERENCE	27.9
1993				20	7.9	REFERENCE	REFERENCE	REFERENCE	REFERENCE	27.9
1994				20	7.9	REFERENCE	REFERENCE	REFERENCE	REFERENCE	27.9
1995			538.2	20	7.9	REFERENCE	REFERENCE	REFERENCE	REFERENCE	27.9
1996				20	10	REFERENCE	REFERENCE	REFERENCE	REFERENCE	27.9
1997				20	10	REFERENCE	REFERENCE	REFERENCE	REFERENCE	30
1998				20	10	REFERENCE	REFERENCE	REFERENCE	REFERENCE	30
1999				20	10	REFERENCE	REFERENCE	REFERENCE	REFERENCE	30
2000				20	10	REFERENCE	REFERENCE	REFERENCE	REFERENCE	30
2001				20	10	REFERENCE	REFERENCE	REFERENCE	REFERENCE	30
2002				20	10	REFERENCE	REFERENCE	REFERENCE	REFERENCE	30
2003				20	10	REFERENCE	REFERENCE	REFERENCE	REFERENCE	30
2004				20	10	REFERENCE	REFERENCE	REFERENCE	REFERENCE	30
2005				20	10	REFERENCE	REFERENCE	REFERENCE	REFERENCE	30
2006				20	10	REFERENCE	REFERENCE	REFERENCE	REFERENCE	30
2007				20	10	REFERENCE	REFERENCE	REFERENCE	REFERENCE	30
2008				20	10	REFERENCE	REFERENCE	REFERENCE	REFERENCE	30
2009				20	10	REFERENCE	REFERENCE	REFERENCE	REFERENCE	30
2010				20	10	REFERENCE	REFERENCE	REFERENCE	REFERENCE	30
2011		(2698)								

248

TABLE 4-3

400 kV COST STREAM
M$ (1980)

YEAR	1ST TRANSMISSION LINE	SUBSEQUENT TRANSMISSION LINE	SUBSTATION	OPERATIONS & MAINTENANCE TRANSMISSION	OPERATIONS & MAINTENANCE SUBSTATION	PEAK LOSSES (MW)	COST OF PEAK LOSSES	ENERGY LOSSES (GWH)	COST OF ENERGY LOSSES	TOTAL
1981	17.6		17.2							34.8
1982	87.4	17.6	69.0							174.0
1983	349.5	87.4	516.0							952.9
1984	699	349.5	808.5							1857.0
1985	524.1	699	223.6							1446.7
1986	69.8	524.1	86.0			REFERENCE				679.9
1987		69.8		9.4	4.6	9.2	15.5	49.4	51.9	151.2
1988				18.7	6.3	17.7	29.7	95.2	102.8	157.5
1989				18.7	6.3	17.7	29.7	95.2	105.8	160.5
1990		17.6		18.7	6.3	17.7	29.7	95.2	109.1	181.4
1991		87.4		18.7	6.3	17.7	29.7	95.2	112.3	254.4
1992		349.5		18.7	6.3	17.7	29.7	95.2	115.6	519.3
1993		699		18.7	6.3	17.7	29.7	95.2	119.2	872.9
1994		524.1		18.7	6.3	17.7	29.7	95.2	122.7	701.5
1995		69.8	479.5	18.7	6.3	45.3	76.1	243.7	323.4	973.8
1996				28	8.4	45.3	76.1	243.7	332.1	444.6
1997				28	8.4	45.3	76.1	243.7	343.1	455.6
1998				28	8.4	45.3	76.1	243.7	353.4	465.9
1999				28	8.4	45.3	76.1	243.7	353.4	465.9
2000				28	8.4	45.3	76.1	243.7	353.4	465.9
2001				28	8.4	45.3	76.1	243.7	353.4	465.9
2002				28	8.4	45.3	76.1	243.7	353.4	465.9
2003				28	8.4	45.3	76.1	243.7	353.4	465.9
2004				28	8.4	45.3	76.1	243.7	353.4	465.9
2005				28	8.4	45.3	76.1	243.7	353.4	465.9
2006				28	8.4	45.3	76.1	243.7	353.4	465.9
2007				28	8.4	45.3	76.1	243.7	353.4	465.9
2008				28	8.4	45.3	76.1	243.7	353.4	465.9
2009				28	8.4	45.3	76.1	243.7	353.4	465.9
2010				28	8.4	45.3	76.1	243.7	503.9	616.4
2011		(2927)								

TABLE 4-4

230 kV COST STREAM
MØ (1980)

YEAR	1ST TRANSMISSION LINE	SUBSEQUENT TRANSMISSION LINE	SUBSTATION	OPERATIONS & MAINTENANCE TRANSMISSION	OPERATIONS & MAINTENANCE SUBSTATION	PEAK LOSSES (MW)	COST OF PEAK LOSSES	ENERGY LOSSES (GWH)	COST OF ENERGY LOSSES	TOTAL
1981	23.1		8.4							31.5
1982	115.4	23.1	33.4							171.9
1983	461.5	115.4	250.7							827.6
1984	922.9	461.5	392.7							1771.1
1985	692.2	922.9	108.6							1723.7
1986	92.2	692.2	41.8			22.5	37.8	121.0	123.1	987.1
1987		92.2		11.5	10.7	29.3	49.2	157.6	165.1	328.7
1988				23.0	10.7	31.8	53.4	171.0	174.0	261.1
1989				23.0	10.7	31.8	53.4	171.0	184.6	271.7
1990		15.4		23.0	10.7	31.8	53.4	171.0	190.1	292.6
1991		76.9		23.0	10.7	31.8	53.4	171.0	201.7	365.7
1992		307.6		23.0	10.7	31.8	53.4	171.0	207.8	602.5
1993		615.3		23.0	10.7	31.8	53.4	171.0	214.0	916.4
1994		461.5		23.0	10.7	31.8	53.4	171.0	220.4	769.0
1995		61.5	385.9	23.0	10.7	30.2	50.7	162.4	215.6	747.4
1996				30.7	15.4	30.2	50.7	162.4	222.1	318.9
1997				30.7	15.4	30.2	50.7	162.4	228.7	325.5
1998				30.7	15.4	30.2	50.7	162.4	235.6	332.4
1999				30.7	15.4	30.2	50.7	162.4	235.6	332.4
2000				30.7	15.4	30.2	50.7	162.4	235.6	332.4
2001				30.7	15.4	30.2	50.7	162.4	235.6	332.4
2002				30.7	15.4	30.2	50.7	162.4	235.6	332.4
2003				30.7	15.4	30.2	50.7	162.4	235.6	332.4
2004				30.7	15.4	30.2	50.7	162.4	235.6	332.4
2005				30.7	15.4	30.2	50.7	162.4	235.6	332.4
2006				30.7	15.4	30.2	50.7	162.4	235.6	332.4
2007				30.7	15.4	30.2	50.7	162.4	235.6	332.4
2008				30.7	15.4	30.2	50.7	162.4	235.6	332.4
2009				30.7	15.4	30.2	50.7	162.4	235.6	332.4
2010				30.7	15.4	30.2	50.7	162.4	335.9	432.7
		(2716.5)								

257

TABLE 4-5

MAE MOH 400 kV SUBSTATION COST ESTIMATE THROUGH 1988

	DESCRIPTION	F. C.	L. C.	TOTAL
1.	Steel Structures	2.7	0.7	3.4
2.	Misc. Hardware & Equipment	32.0	9.6	41.6
3.	Power Circuit Breakers	64.1	17.7	81.8
4.	Disconnect Switches	19.8	5.9	25.7
5.	Main Control Boards, Equipment & Communications	10.1	3.0	13.1
6.	Power & Control Cable	5.4	1.7	7.1
7.	Foundations	—	14.5	14.5
8.	Substation Transformer	58.1	4.3	62.4
9.	Generator Transformer	207.0	14.6	221.6
10.	Miscellaneous Facilities	—	4.9	4.9
11.	Land	—	—	—
12.	Land Improvement	—	1.4	1.4
13.	Miscellaneous Expenses	13.3	5.3	18.6
14.1	Bus Reactors	33.8	2.3	36.1
14.2	Bus Capacitors	55.2	3.6	58.8
	SUBTOTAL DIRECT COST	501.5	89.5	591.0
15.	Engineering & Supervision	—	41.4	41.4
16.	Contingencies	50.2	9.0	59.2
17.	Import Duties	—	50.1	50.1
	TOTAL COST W/O IDC	551.7	190.0	741.7

ALL COSTS IN 1980 MILLION BAHTS (MB)

251

TABLE 4-6

CHUM SAENG 400 kV SUBSTATION COST ESTIMATE THROUGH 1988

	DESCRIPTION	F. C.	L. C.	TOTAL
1.	Steel Structures	4.2	1.1	5.3
2.	Misc. Hardware & Equipment	37.9	11.4	49.3
3.	Power Circuit Breakers	46.6	12.7	59.5
4.	Disconnect Switches	18.0	5.4	23.4
5.	Main Control Boards, Equipment & Communications	9.9	3.0	12.9
6.	Power & Control Cable	3.9	1.2	5.1
7.	Foundations	—	17.1	17.1
8.	Substation Transformer	58.1	4.3	62.4
9.	Generator Transformer	—	—	—
10.	Miscellaneous Facilities	—	5.3	5.3
11.	Land	—	2.4	2.4
12.	Land Improvement	—	5.8	5.8
13.	Miscellaneous Expenses	13.1	6.1	19.2
14.1	Bus Reactors	70.8	4.8	75.6
14.2	Bus Capacitors	—	—	—
	SUBTOTAL DIRECT COST	262.5	80.8	343.3
15.	Engineering & Supervision	—	24.0	24.0
16.	Contingencies	26.2	8.1	34.3
17.	Import Duties	—	26.3	26.3
	TOTAL COST W/O IDC	288.7	139.2	427.9

ALL COSTS IN 1980 MILLION BAHTS (MB)

252

TABLE 4-7

MIN BURI 400 kV SUBSTATION COST ESTIMATE THROUGH 1988

	DESCRIPTION	F. C.	L. C.	TOTAL
1.	Steel Structures	2.6	0.6	3.2
2.	Misc. Hardware & Equipment	27.6	8.3	35.9
3.	Power Circuit Breakers	34.9	9.6	44.5
4.	Disconnect Switches	14.9	4.5	19.4
5.	Main Control Boards, Equipment & Communications	7.3	2.2	9.5
6.	Power & Control Cable	5.4	1.7	7.1
7.	Foundations	—	21.8	21.8
8.	Substation Transformer	116.3	8.4	124.7
9.	Generator Transformer	—	—	—
10.	Miscellaneous Facilities	—	4.4	4.4
11.	Land	—	3.7	3.7
12.	Land Improvement	—	3.8	3.8
13.	Miscellaneous Expenses	10.5	5.5	16.0
14.1	Bus Reactors	136.9	9.4	146.3
14.2	Bus Capacitors	—	—	—
	SUBTOTAL DIRECT COST	356.4	83.9	440.3
15.	Engineering & Supervision	—	30.8	30.8
16.	Contingencies	35.6	8.4	44.0
17.	Import Duties	—	35.6	35.6
	TOTAL COST W/O IDC	392.0	158.7	550.7

ALL COSTS IN 1980 MILLION BAHTS (MB)

253

TABLE 4-8

MAE MOH - BANGKOK EHV TRANSMISSION PROJECT

TOTAL 400 kV SUBSTATION COST ESTIMATES THROUGH 1988

	DESCRIPTION	F. C.	L. C.	TOTAL
1.	Steel Structures	9.5	2.4	11.9
2.	Misc. Hardware & Equipment	97.5	29.3	126.8
3.	Power Circuit Breakers	145.6	40.2	185.8
4.	Disconnect Switches	52.7	15.8	68.5
5.	Main Control Boards, Equipment & Communications	27.3	8.2	35.5
6.	Power & Control Cable	14.7	4.6	19.3
7.	Foundations	—	53.4	53.4
8.	Substation Transformer	232.5	17.0	249.5
9.	Generator Transformer	207.0	14.6	221.6
10.	Miscellaneous Facilities	—	14.6	14.6
11.	Land	—	6.1	6.1
12.	Land Improvement	—	11.0	11.0
13.	Miscellaneous Expenses	36.9	16.9	53.8
14.1	Bus Reactors	241.5	16.5	258.0
14.2	Bus Capacitors	55.2	3.6	58.8
	SUBTOTAL DIRECT COST	1120.4	254.2	1374.6
15.	Engineering & Supervision		96.2	96.2
16.	Contingencies	112.0	25.5	137.5
17.	Import Duties		112.0	112.0
	TOTAL COST W/O IDC	1232.4	487.9	1720.3

ALL COSTS IN 1980 MILLION BAHTS (MB)

254

TABLE 4-9

COSTS FOR MAJOR 400 kV EQUIPMENT ADDITIONS (from 1988 to 1995)

DESCRIPTION		F. C.	L. C.	TOTAL
MAE MOH	4 Generator Transformers	207.0	14.6	221.6
MAE MOH	7 PCB's	40.8	11.3	52.1
CHUM SAENG	3 PCB's	17.5	4.8	22.3
MIN BURI	1 Transformer	58.1	4.3	62.4
MIN BURI	3 PCB's	17.5	4.8	22.3
SUBTOTAL		340.9	39.8	380.7
Engineering & Supervision			26.6	26.6
Contingencies		34.1	4.0	38.1
Import Duty			34.1	34.1
TOTAL ADDITIONAL EQUIPMENT		375.0	104.5	479.5

ALL COSTS IN 1980 MILLION BAHTS (MB)

255

TABLE 4-10

MAE MOH 230 kV SUBSTATION COST ESTIMATES THROUGH 1988

	DESCRIPTION	F. C.	L. C.	TOTAL
	230 kV Terminal Cost for 1-8 & 10-13	61.3	30.9	92.2
9.	Generator Transformer	201.1	14.2	215.3
14.1	Bus Reactors	32.2	2.2	34.4
14.2	Bus Capacitors	51.5	3.4	54.9
	SUBTOTAL DIRECT COST	346.1	50.7	396.8
15.	Engineering & Supervision	—	27.8	27.8
16.	Contingencies	34.6	5.1	39.7
17.	Import Duties	—	34.6	34.6
	TOTAL COST W/O IDC	380.7	118.2	498.9

ALL COSTS IN 1980 MILLION BAHTS (MB)

256

TABLE 4-11

CHUM SAENG 230 kV SUBSTATION COST ESTIMATES THROUGH 1988

	DESCRIPTION	F. C.	L. C.	TOTAL
	230 kV Terminal Cost for 1-8 & 10-13	61.3	30.9	92.2
9.	Generator Transformer	—	—	—
14.1	Bus Reactors	37.0	2.5	39.5
14.2	Bus Capacitors	10.1	0.6	10.7
	SUBTOTAL DIRECT COST	108.4	34.0	142.4
15.	Engineering & Supervision	—	9.9	9.9
16.	Contingencies	10.8	3.4	14.2
17.	Import Duties	—	10.8	10.8
	TOTAL COST W/O IDC	119.2	58.1	177.3

ALL COSTS IN 1980 MILLION BAHTS (MB)

257

TABLE 4-12

MIN BURI 230 kV SUBSTATION COST ESTIMATES THROUGH 1988

	DESCRIPTION	F. C.	L. C.	TOTAL
	230 kV Terminal Cost for 1-8 & 10-13	30.7	15.4	46.1
9.	Generator Transformer	—	—	—
14.1	Bus Reactors	35.4	2.4	37.8
14.2	Bus Capacitors	40.5	2.7	43.2
	SUBTOTAL DIRECT COST	106.6	20.5	127.1
15.	Engineering & Supervision	—	8.9	8.9
16.	Contingencies	10.7	2.0	12.7
17.	Import Duties	—	10.7	10.7
	TOTAL COST W/O IDC	117.3	42.1	159.4

ALL COSTS IN 1980 MILLION BAHTS (MB)

358

TABLE 4-13

MAE MOH -- BANGKOK EHV TRANSMISSION PROJECT

TOTAL 230 kV SUBSTATION COST ESTIMATES THROUGH 1988

	DESCRIPTION	F. C.	L. C.	TOTAL
	230 kV Terminal Cost for 1-8 & 10-13	155.3	77.2	230.5
9.	Generator Transformer	201.1	14.2	215.3
14.1	Bus Reactors	104.6	7.1	111.7
14.2	Bus Capacitors	102.1	6.7	108.8
	SUBTOTAL DIRECT COST	561.1	105.2	666.3
15.	Engineering & Supervision	—	46.6	46.6
16.	Contingencies	56.1	10.5	66.6
17.	Import Duties	—	56.1	56.1
	TOTAL COST W/O IDC	617.2	218.4	835.6

ALL COSTS IN 1980 MILLION BAHTS (MB)

259

TABLE 4-14

COSTS FOR MAJOR 230 kV EQUIPMENT ADDITIONS (from 1988 to 1995)

DESCRIPTION		F. C.	L. C.	TOTAL
E MOH	4 Generator Transformers	201.1	14.2	215.3
E MOH	5 Terminals	38.3	19.3	57.6
UM SAENG	2 Terminals	15.3	7.7	23.0
N BURI	1 Terminal	7.7	3.9	11.6
BTOTAL		262.4	45.1	307.5
gineering & Supervision			21.5	21.5
ntingencies		26.2	4.5	30.7
port Duty			26.2	26.2
TAL ADDITIONAL EQUIPMENT		288.6	97.3	385.9

L COSTS IN 1980 MILLION BAHTS (MB)

260

TABLE 4-15

COST ESTIMATE FOR 2 SINGLE CIRCUIT 400 kV LINES - 550 KM

MB/KM (1980)

	DESCRIPTION	F. C.	L. C.	TOTAL
1.	Preliminary Work		49.0	49.0
2.	Tower Foundations		341.0	341.0
3.	Tower Steel	291.5	60.5	352.0
4.	Conductor & Overhead Ground Wire	278.3	40.2	318.5
5.	Insulators & Hardware	99.0	3.3	102.3
6.	Grounding Material	5.5	4.4	9.9
7.	Right-of-Way		113.3	113.3
8.	Miscellaneous Expenses	67.7	61.0	128.7
	TOTAL DIRECT COST	742.0	672.7	1414.7
9.	Engineering & Supervision		106.1	106.1
10.	Contingencies		152.3	152.3
	TOTAL W/O IDC, IMPORT DUTY & ESCAL	742.0	931.1	1673.1
11.	Import Duties		74.3	74.3
	TOTAL W/O IDC (1980 B)	742.0	1005.4	1747.4
	x 2 Lines	1484.0	2010.8	3494.8

261

TABLE 4-16

COST ESTIMATE FOR 2 DOUBLE CIRCUIT 230 kV LINES - 550 KM

MØ/KM (1980)

DESCRIPTION	F. C.	L. C.	TOTAL
Preliminary Work		30.8	30.8
Tower Foundations		456.5	456.5
Tower Steel	302.5	62.2	364.7
Conductor & Overhead Ground Wire	547.8	71.5	619.3
Insulators & Hardware	101.2	3.3	104.5
Grounding Material	5.5	4.4	9.9
Right-of-Way		68.8	68.8
Miscellaneous Expenses	95.7	69.8	165.5
TOTAL DIRECT COST	1052.7	767.3	1820.0
Engineering & Supervision		182.0	182.0
Contingencies		200.2	200.2
TOTAL W/O IDC, IMPORT DUTY & ESCAL	1052.7	1149.	2202.2
Import Duties		105.1	105.1
TOTAL W/O IDC (1980 MØ)	1052.7	1254.6	2307.3
x 2 Lines	2105.4	2509.2	4614.6

262

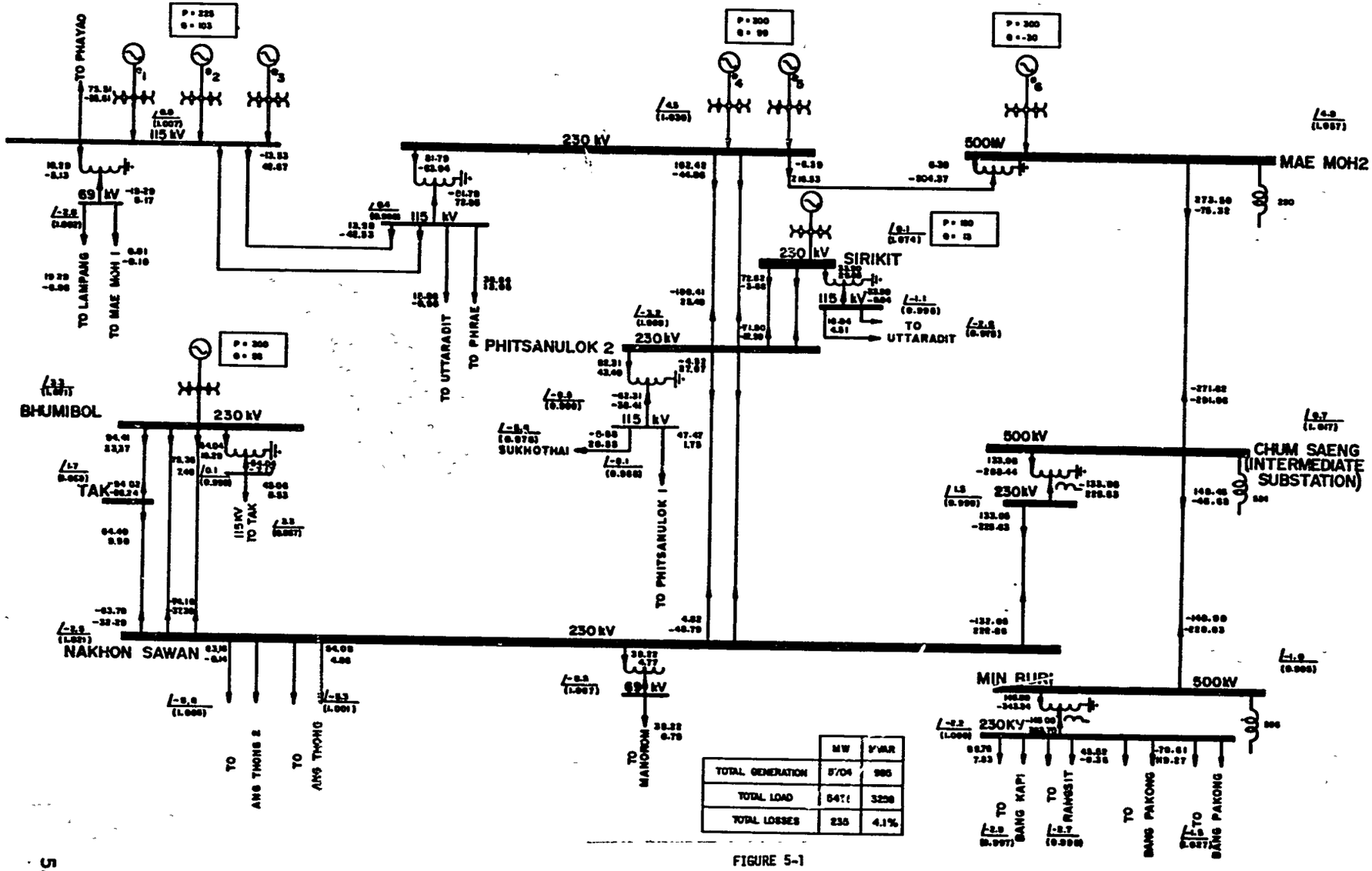

	MW	MVAR
TOTAL GENERATION	5704	985
TOTAL LOAD	5471	3298
TOTAL LOSSES	235	4.1%

FIGURE 5-1

MAE MOH TO MIN BURI 500 KV TRANSMISSION PROJECT

1986 PEAK LOAD

500 KV BASE CASE WITH SWING MACHINE AT BANG PAKONG

GENERATION = 300 MW

263

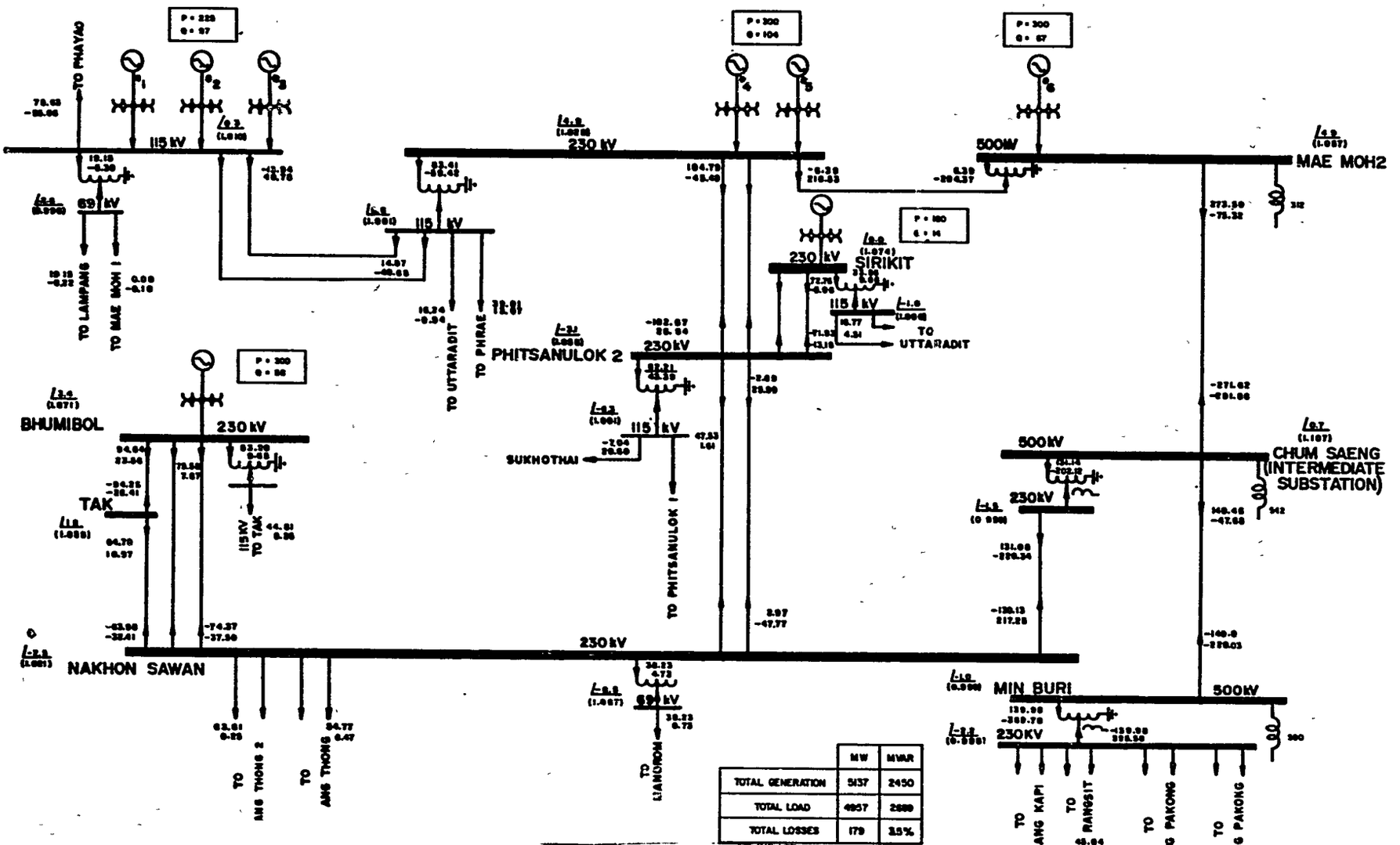

	MW	MVAR
TOTAL GENERATION	5137	2450
TOTAL LOAD	4957	2589
TOTAL LOSSES	179	3.5%

FIGURE 5-2

MAE MOH TO MIN BURI 500 KV TRANSMISSION PROJECT

1986 PEAK LOAD: BASE CASE

REDUCTION OF AREAS 2 AND 3, FIXED REACTORS USED

GENERATION = 300 MW

264

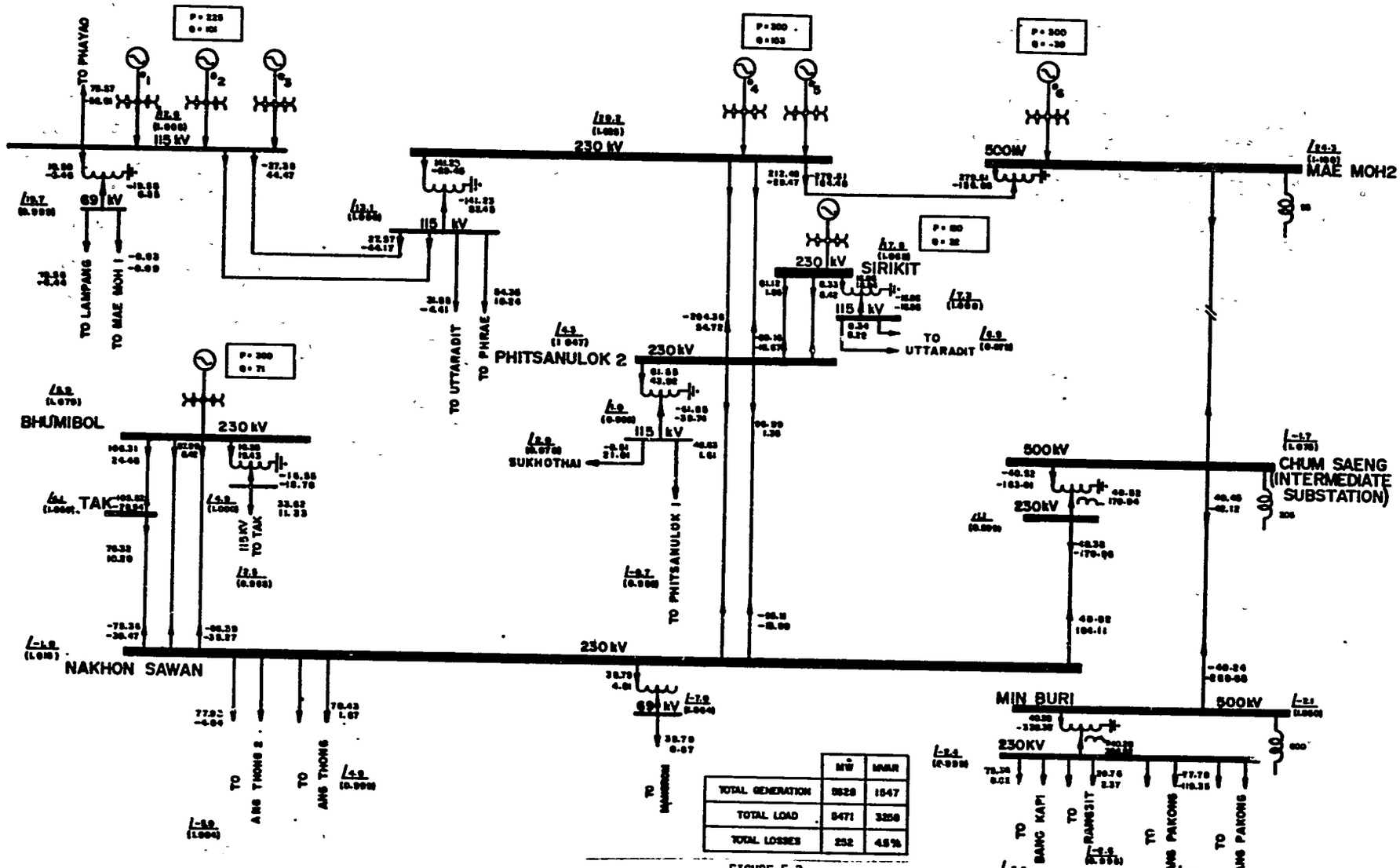

	MW	MVAR
TOTAL GENERATION	3528	1647
TOTAL LOAD	3471	3250
TOTAL LOSSES	252	48%

FIGURE 5-3

MAE MOH TO MIN BURI 500 KV TRANSMISSION PROJECT

1986 SYSTEM

MAE MOH TO CHUM SAENG LINE OUTAGE

GENERATION = 300 MW

265

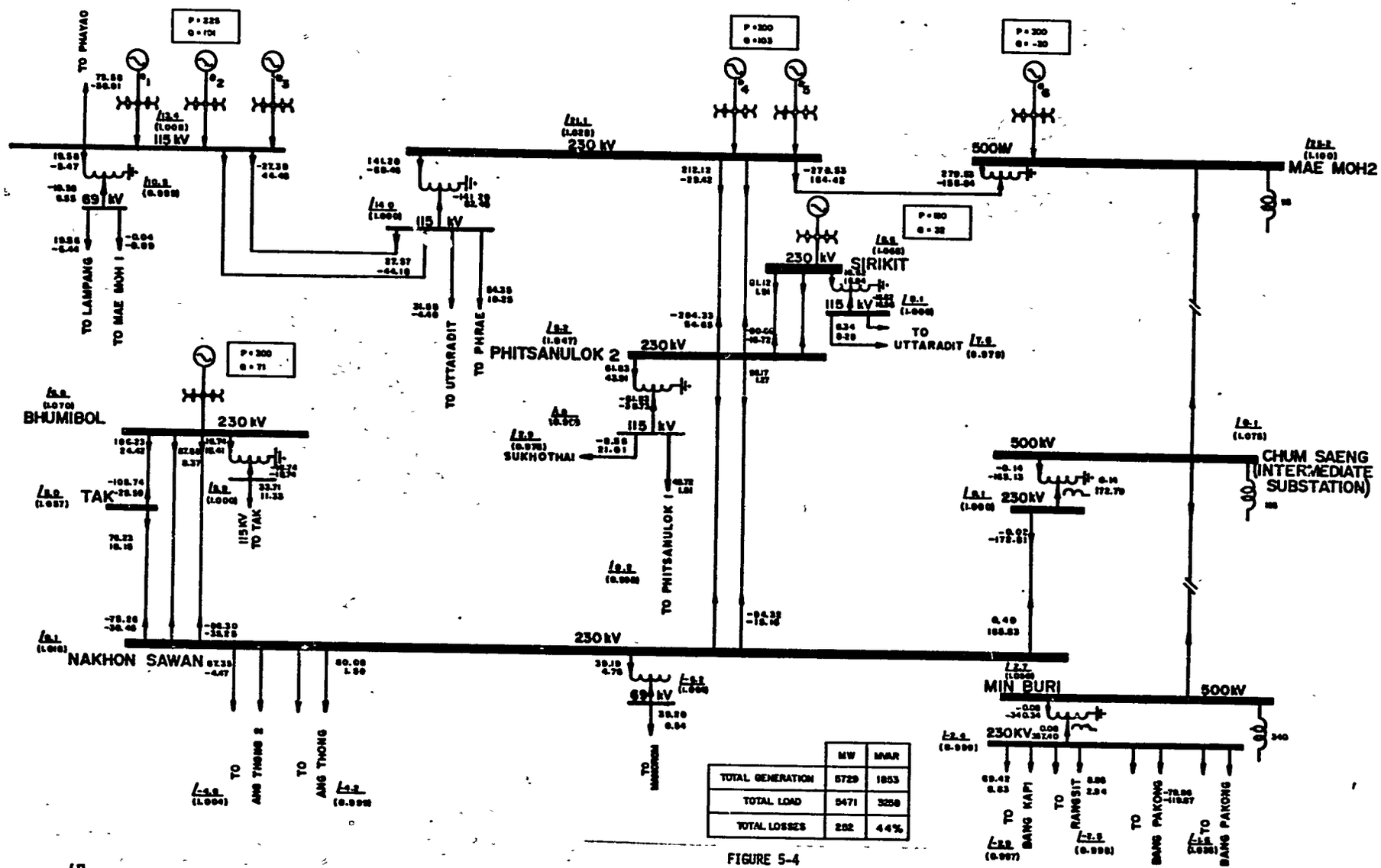

	MW	MVAR
TOTAL GENERATION	5729	1853
TOTAL LOAD	5471	3259
TOTAL LOSSES	252	44%

FIGURE 5-4

MAE MOH TO MIN BURI 500 KV TRANSMISSION PROJECT

1986 SYSTEM

MAE MOH TO MIN BURI LINE OUTAGE

GENERATION = 300 MW

266

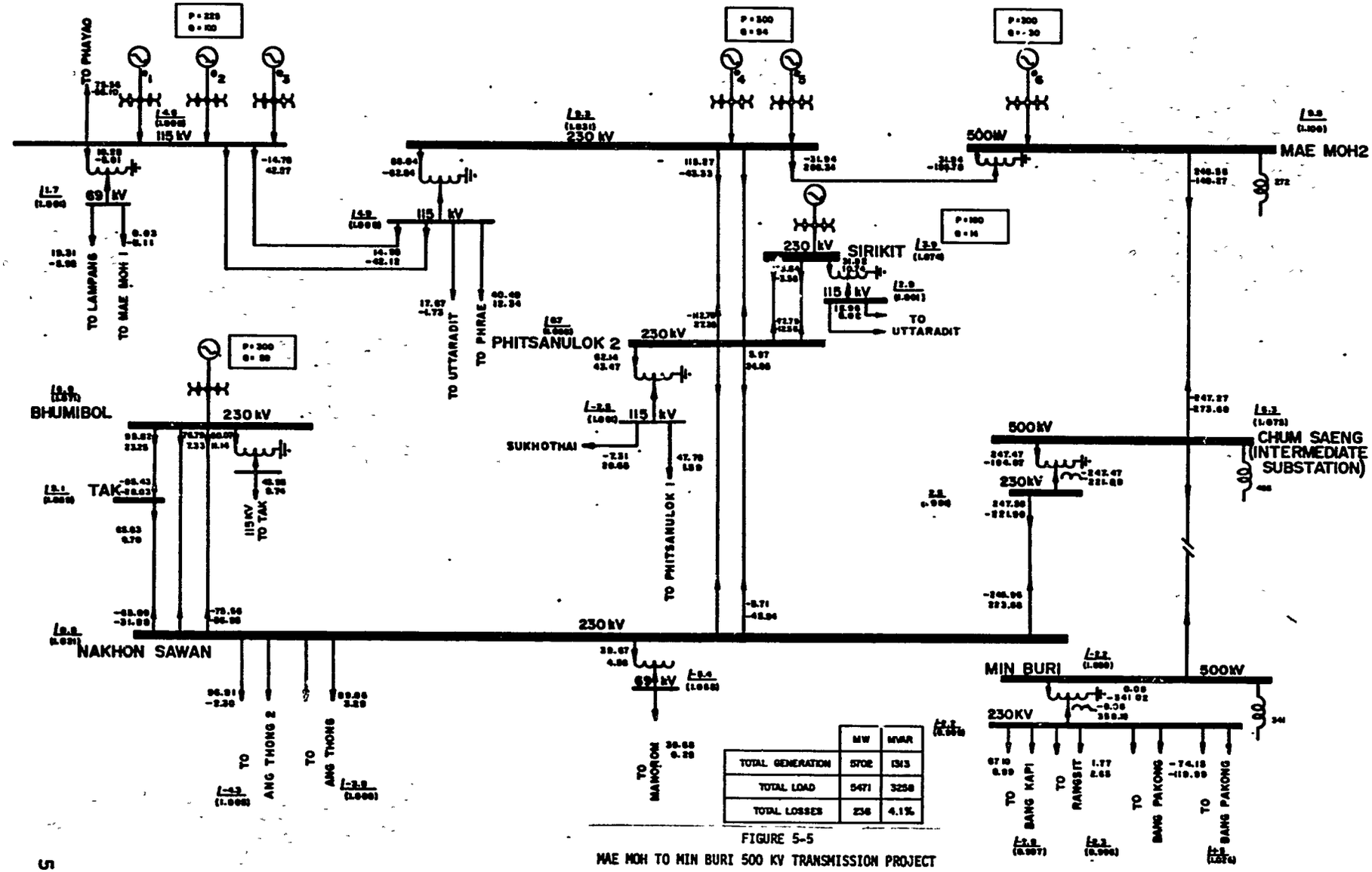

	MW	MVAR
TOTAL GENERATION	5702	1313
TOTAL LOAD	5471	3258
TOTAL LOSSES	236	4.1%

FIGURE 5-5

MAE MOH TO MIN BURI 500 KV TRANSMISSION PROJECT

1986 SYSTEM

CHUM SAENG TO MIN BURI LINE OUTAGE

GENERATION = 300 MW

267

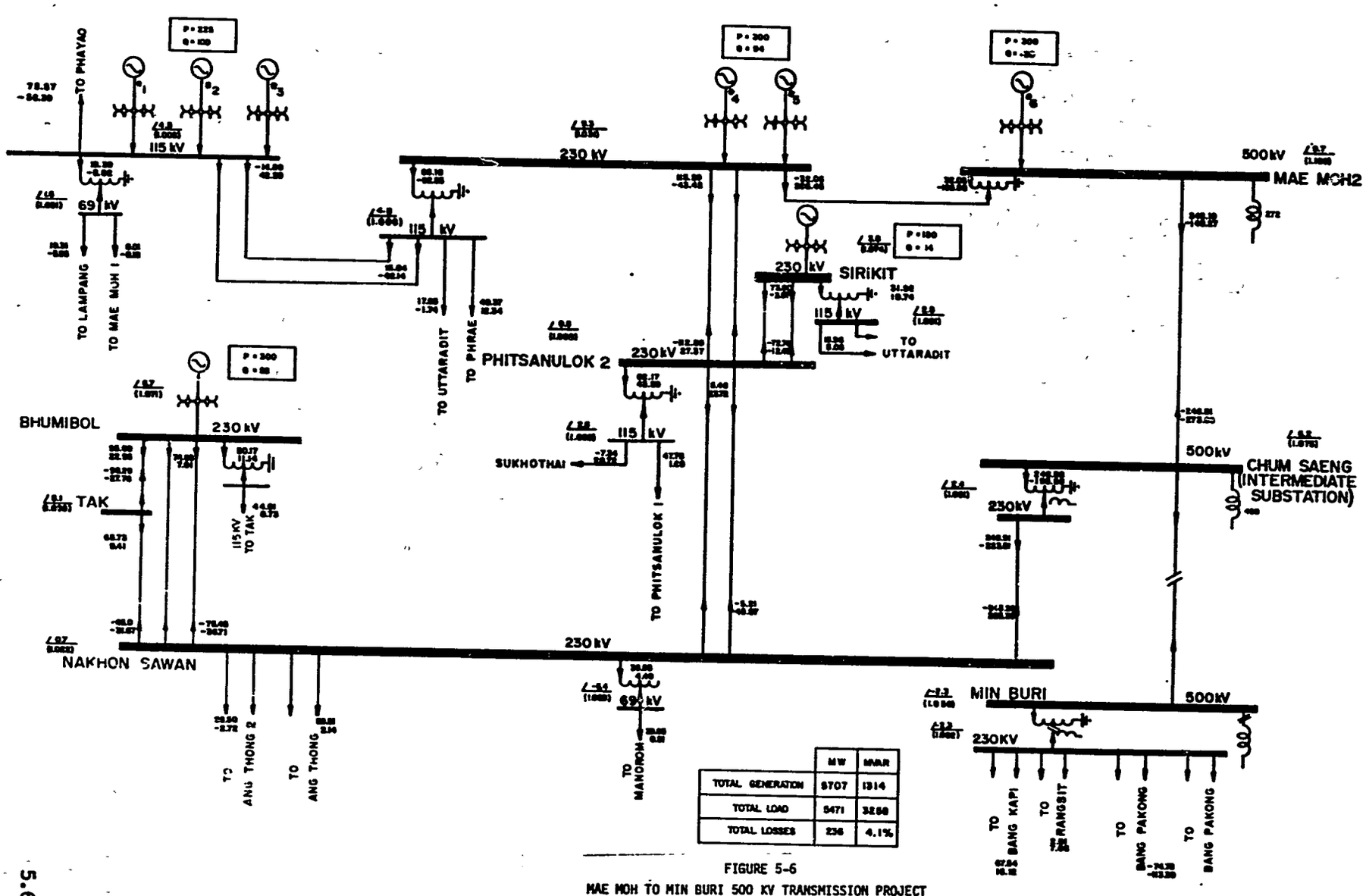

	MW	MVAR
TOTAL GENERATION	5707	1314
TOTAL LOAD	5471	3258
TOTAL LOSSES	236	4.1%

FIGURE 5-6
MAE MOH TO MIN BURI 500 KV TRANSMISSION PROJECT
1986 PEAK LOAD
CHUM SAENG - MIN BURI LINE OUTAGE
MIN BURI REACTOR OUTAGE
MIN BURI 500/230 KV TRANSFORMER OUTAGE
GENERATION = 300 MW

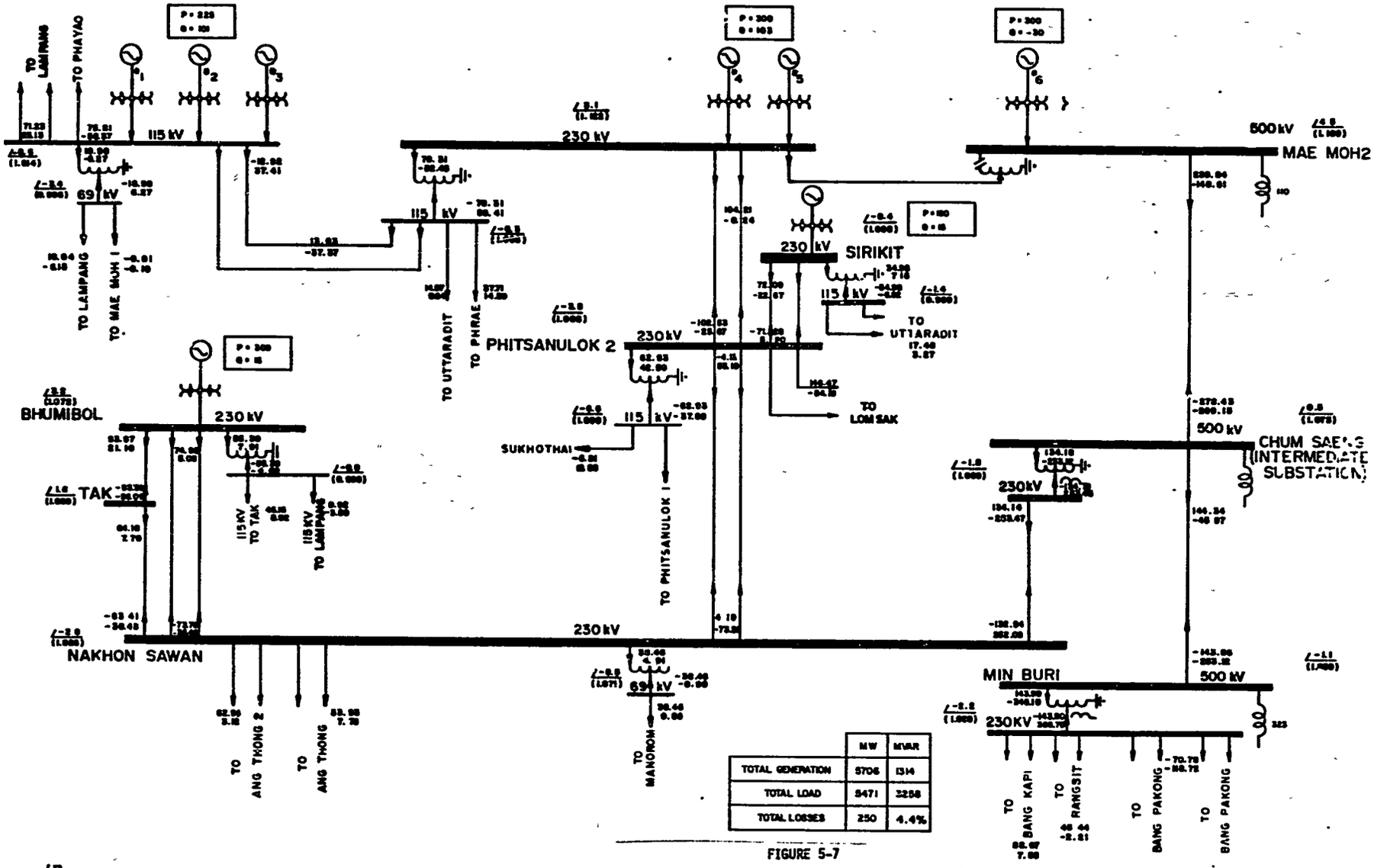

	MW	MVAR
TOTAL GENERATION	5706	1314
TOTAL LOAD	5471	3258
TOTAL LOSSES	250	4.4%

FIGURE 5-7

MAE MOH TO MIN BURI 500 KV TRANSMISSION PROJECT

1986 MAE MOH 500/230 KV TRANSFORMER OUTAGE

GENERATION = 300 MW

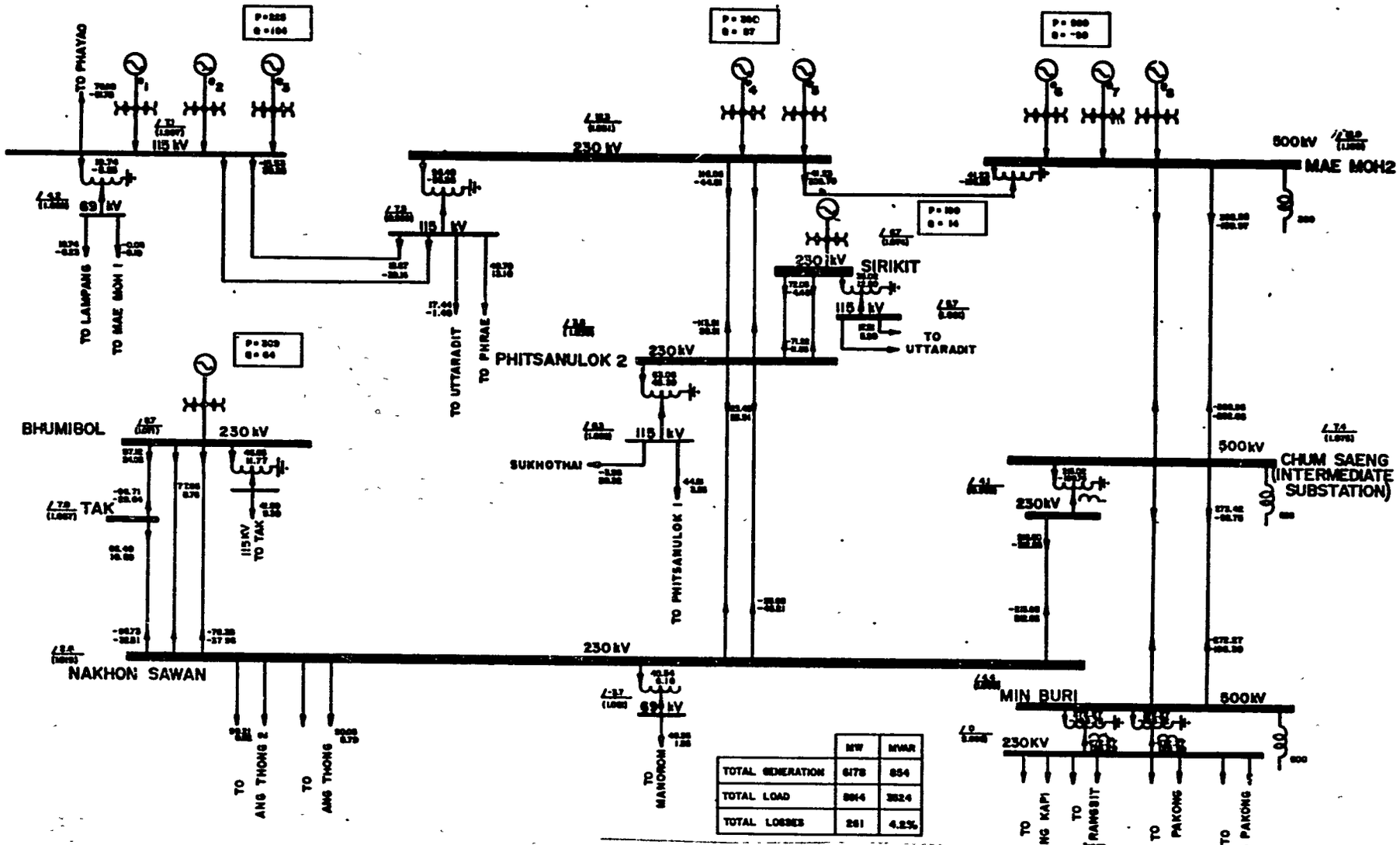

	MW	MVAR
TOTAL GENERATION	6178	854
TOTAL LOAD	5914	3524
TOTAL LOSSES	261	4.2%

FIGURE 5-8

MAE MOH TO MIN BURI 500 KV TRANSMISSION PROJECT

1987 PEAK LOAD

500 KV BASE CASE WITH SWING MACHINE AT BANG PAKONG

MAE MOH GENERATION = 900 MW

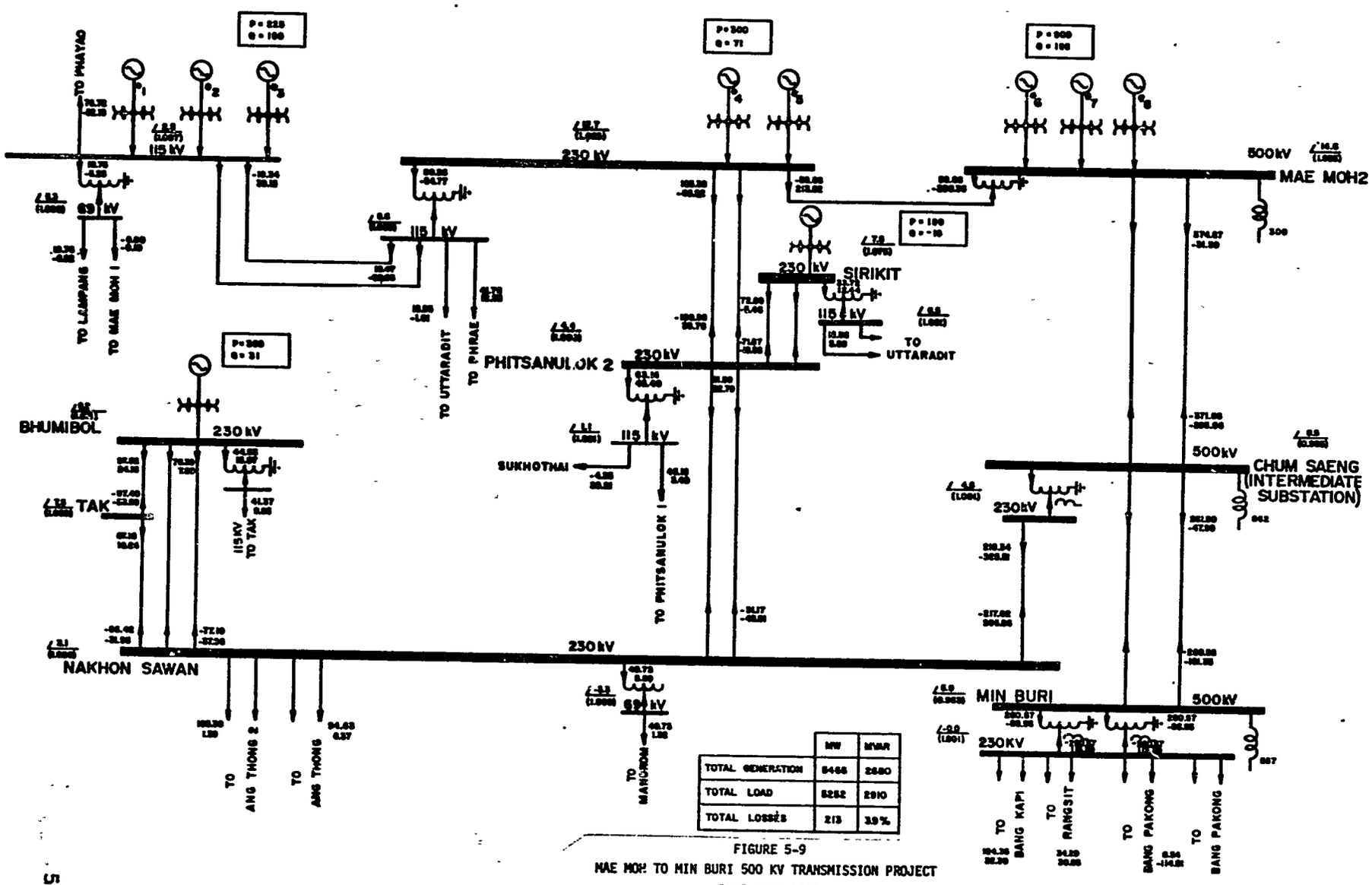

	MW	MVAR
TOTAL GENERATION	5466	2580
TOTAL LOAD	5252	2910
TOTAL LOSSES	213	3.9%

FIGURE 5-9
MAE MOH TO MIN BURI 500 KV TRANSMISSION PROJECT
1987 PEAK LOAD
BASE CASE; REDUCTION OF AREAS 2 AND 3, FIXED REACTORS USED
MAE MOH GENERATION = 900 MW

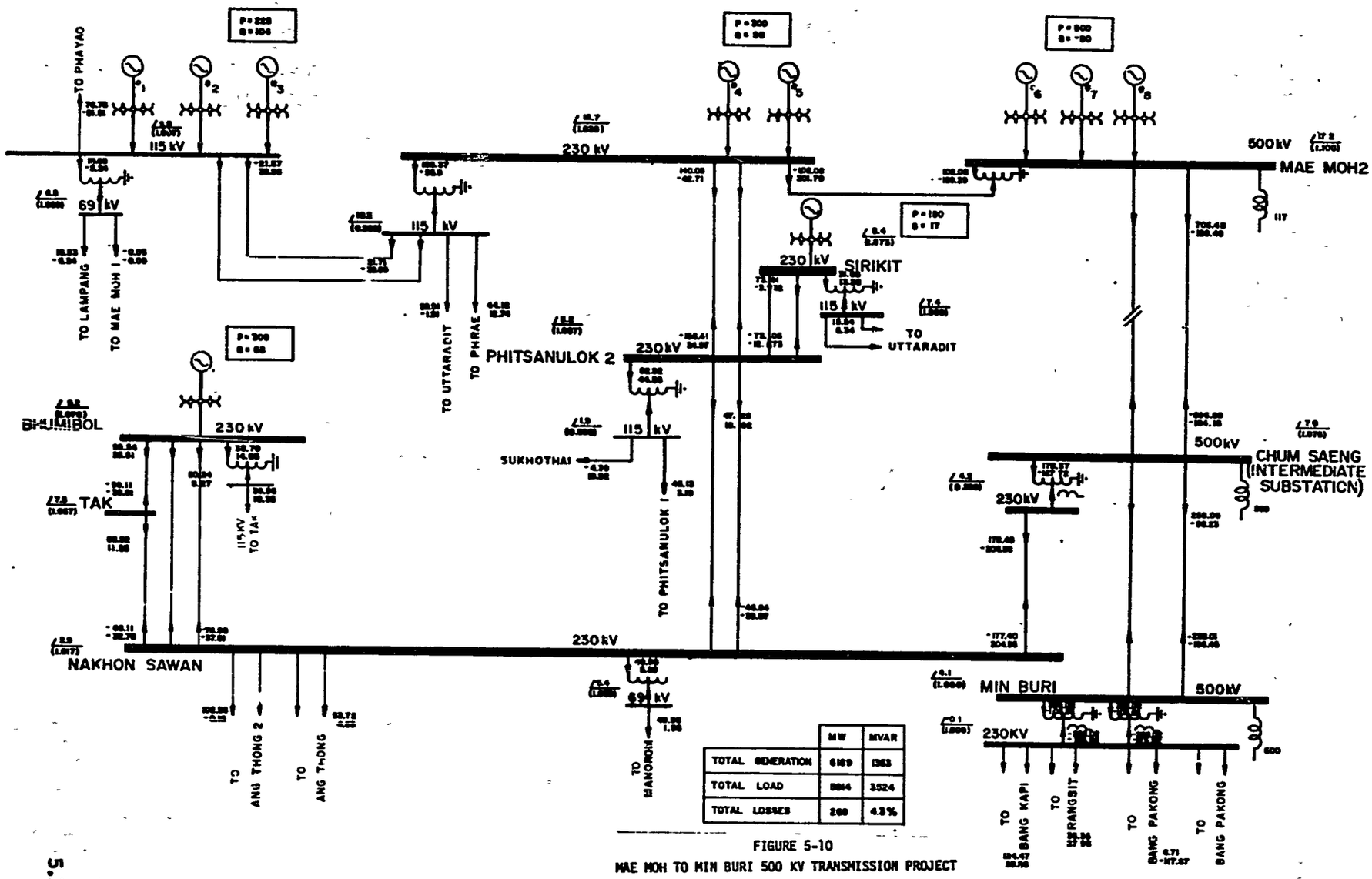

	MW	MVAR
TOTAL GENERATION	6189	1363
TOTAL LOAD	5914	3524
TOTAL LOSSES	269	4.3%

FIGURE 5-10

MAE MOH TO MIN BURI 500 KV TRANSMISSION PROJECT

1987 PEAK LOAD

MAE MOH TO CHUM SAENG LINE OUTAGE CONDITION

MAE MOH GENERATION = 900 MW

272

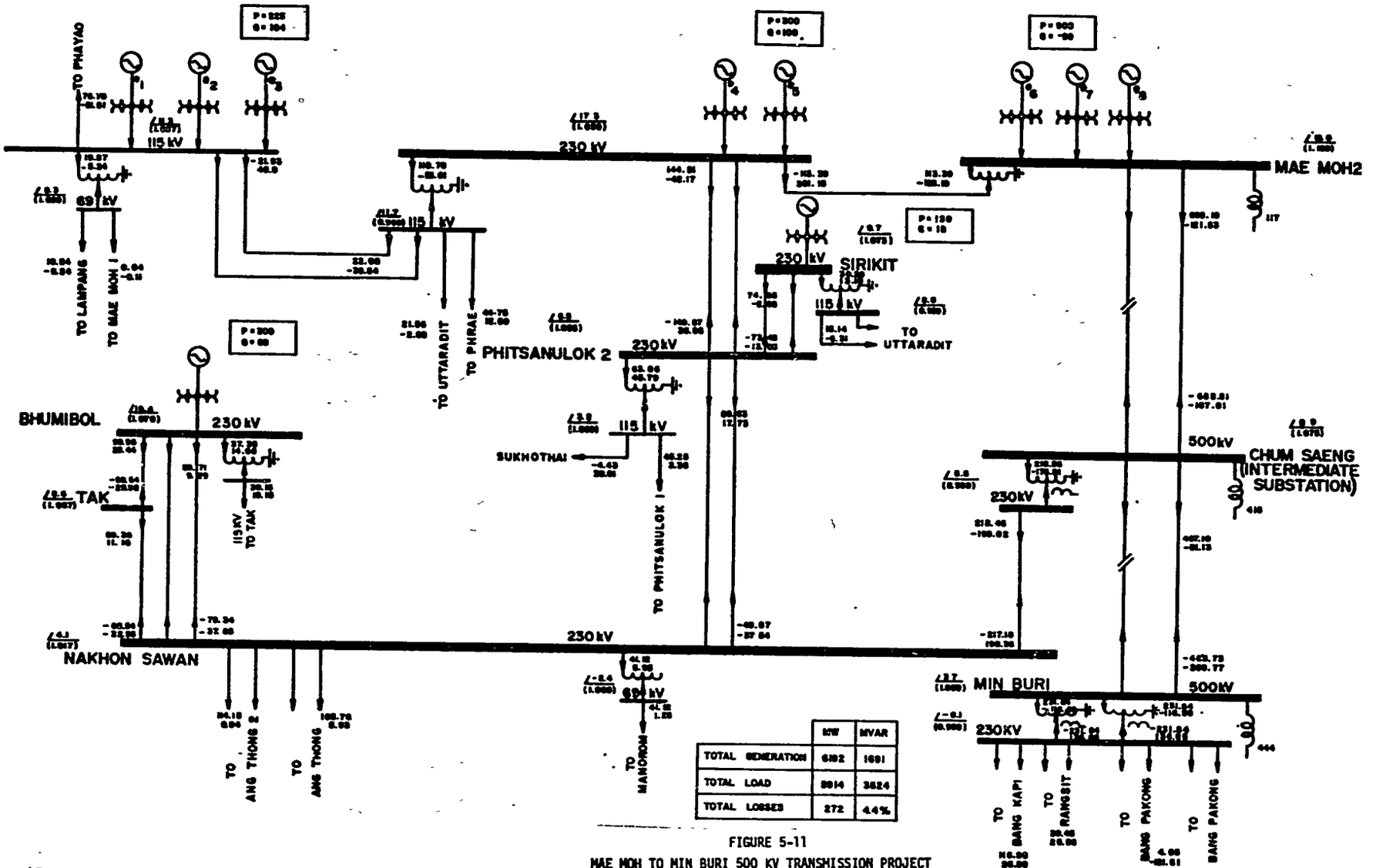

	MW	MVAR
TOTAL GENERATION	6192	1691
TOTAL LOAD	5914	3524
TOTAL LOSSES	272	4.4%

FIGURE 5-11
MAE MOH TO MIN BURI 500 KV TRANSMISSION PROJECT
1987 PEAK LOAD
MAE MOH TO MIN BURI LINE OUTAGE CONDITION
MAE MOH GENERATION = 900 MW

273

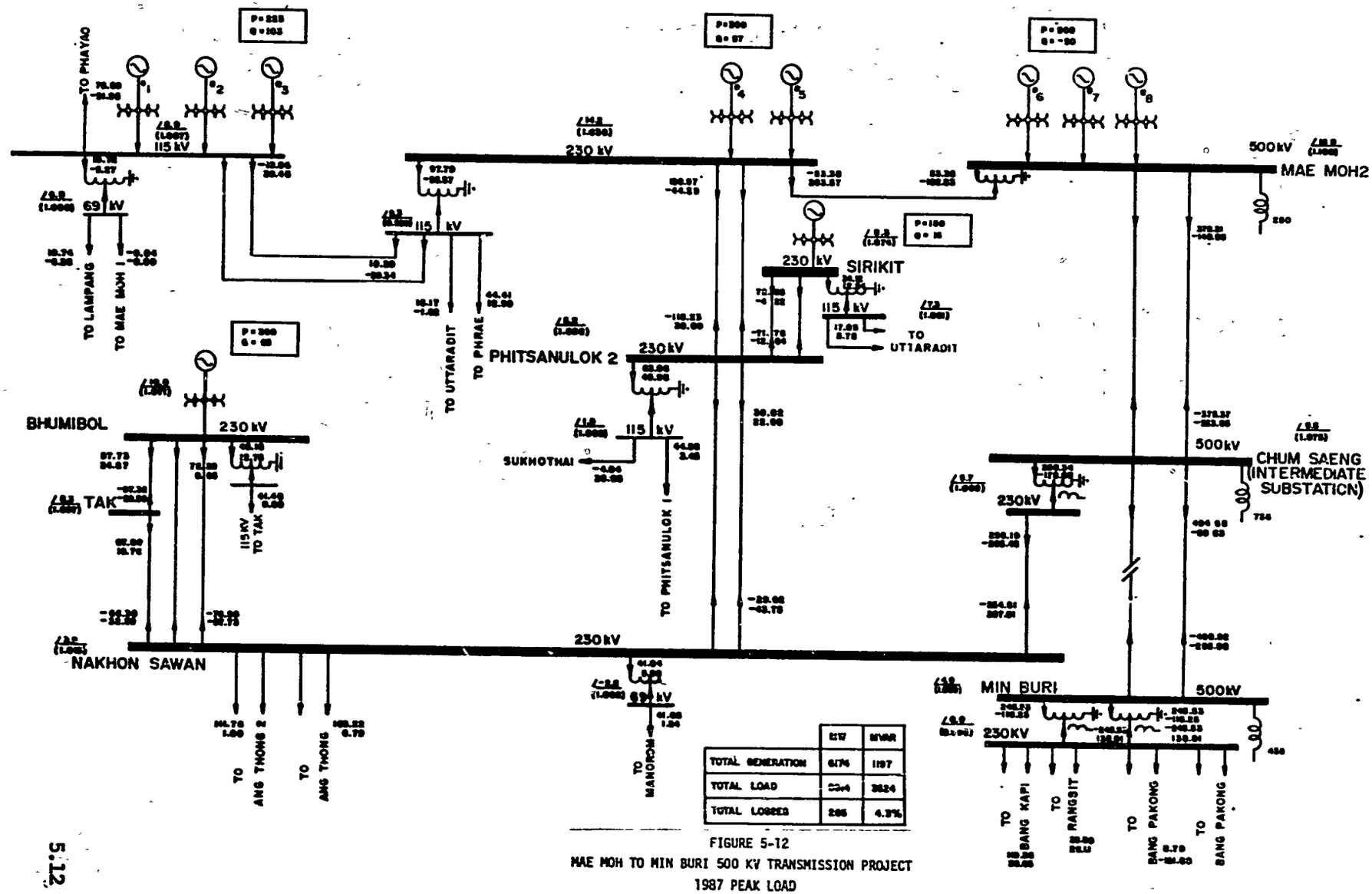

	MW	MVAR
TOTAL GENERATION	6176	1197
TOTAL LOAD	[illegible]	3624
TOTAL LOSSES	286	4.3%

FIGURE 5-12

MAE MOH TO MIN BURI 500 KV TRANSMISSION PROJECT

1987 PEAK LOAD

CHUM SAENG - MIN BURI LINE OUTAGE CONDITION

MAE MOH GENERATION =900 MW

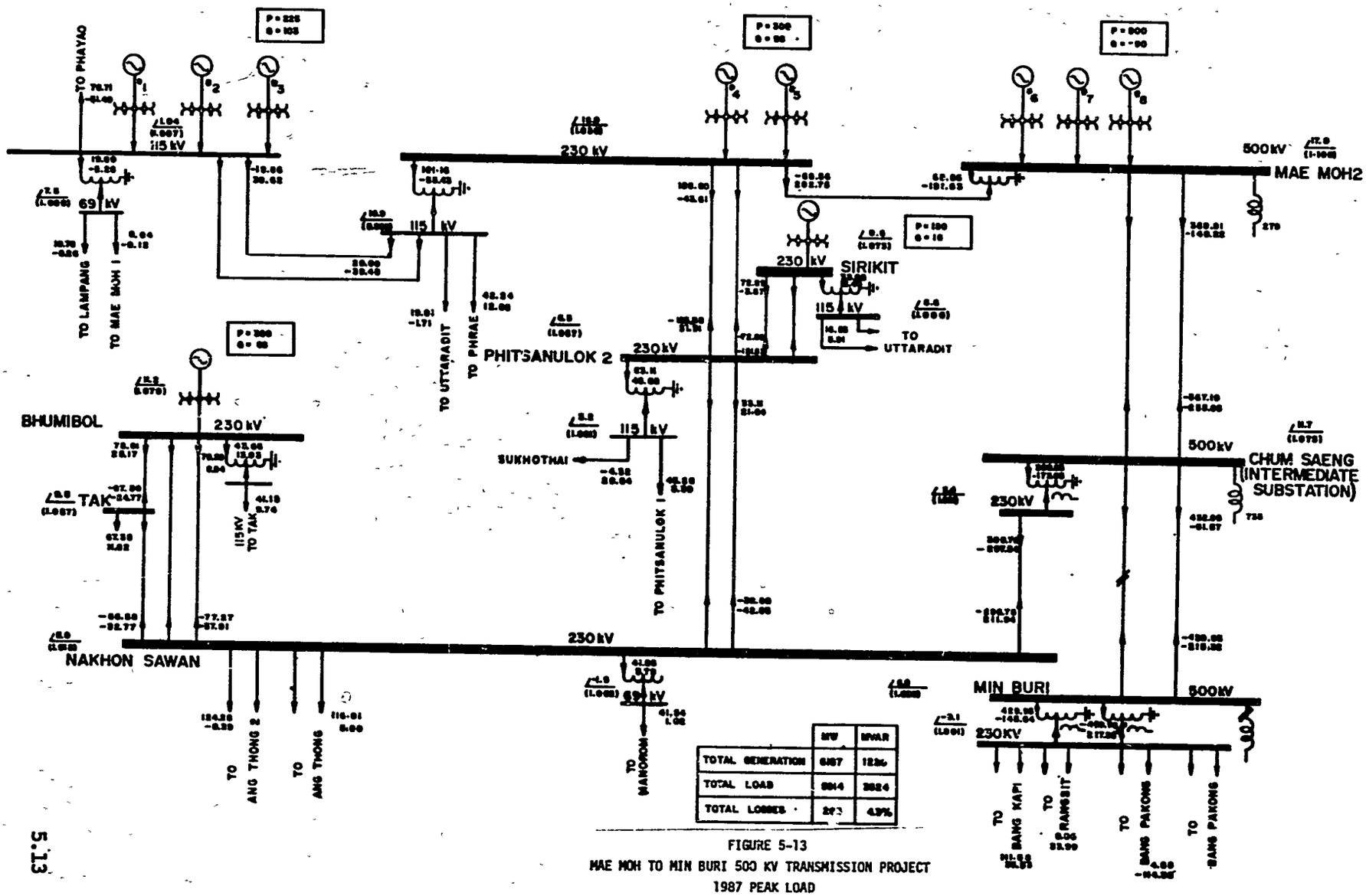

	MW	MVAR
TOTAL GENERATION	6187	1236
TOTAL LOAD	5914	3524
TOTAL LOSSES	273	43%

FIGURE 5-13
MAE MOH TO MIN BURI 500 KV TRANSMISSION PROJECT
1987 PEAK LOAD
CHUM SAENG - MIN BURI LINE OUTAGE
MIN BURI REACTOR OUTAGE
MIN BURI 500/230 KV TRANSFORMER OUTAGE
MAE MOH GENERATION = 900 MW

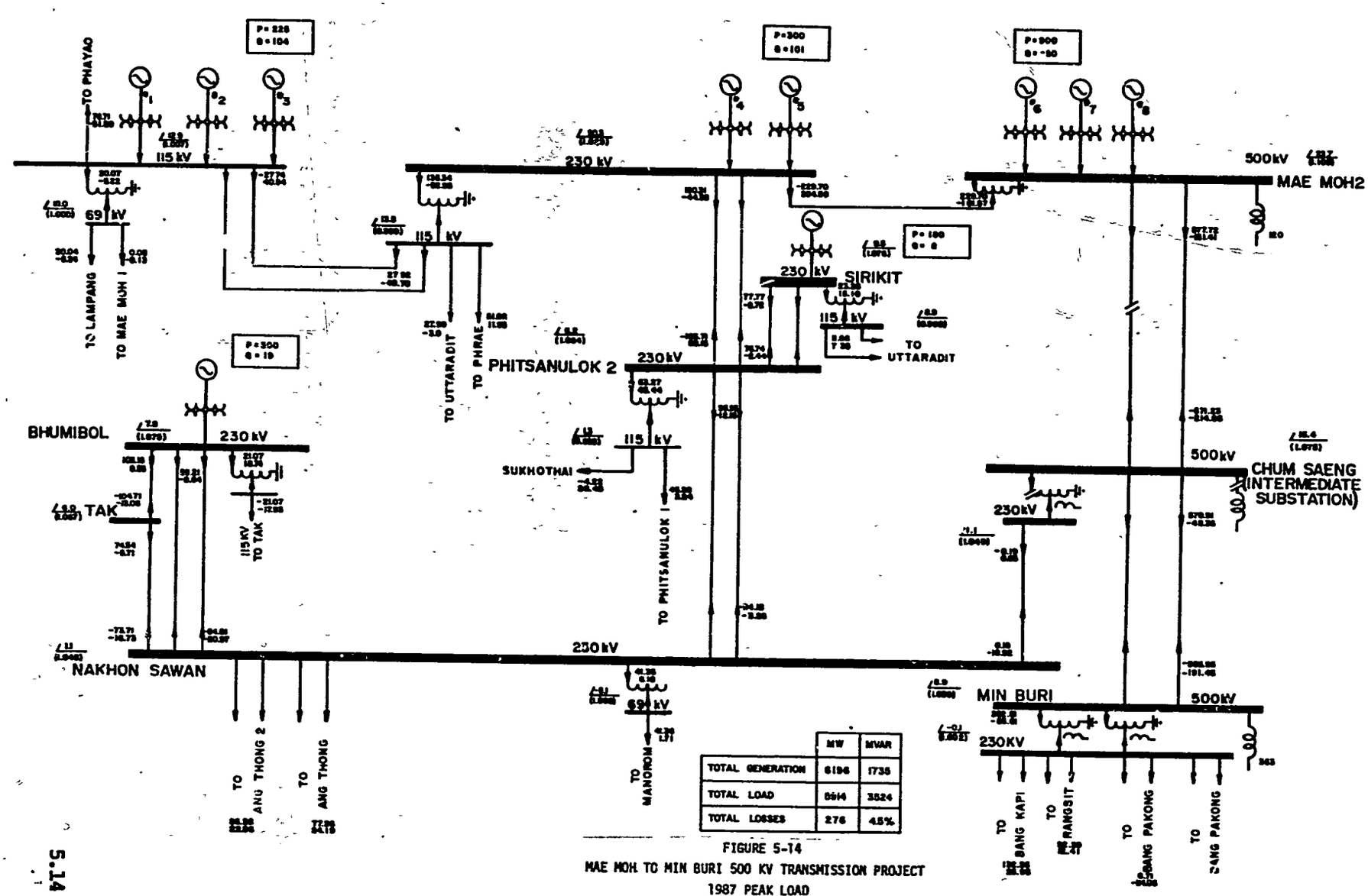

	MW	MVAR
TOTAL GENERATION	6196	1735
TOTAL LOAD	5914	3524
TOTAL LOSSES	276	45%

FIGURE 5-14

MAE MOH TO MIN BURI 500 KV TRANSMISSION PROJECT

1987 PEAK LOAD

MAE MOH TO CHUM SAENG, LINE OUTAGE

CHUM SAENG REACTOR OUTAGE

CHUM SAENG 500/230 KV TRANSFORMER OUTAGE

MAE MOH GENERATION = 900 MW

276

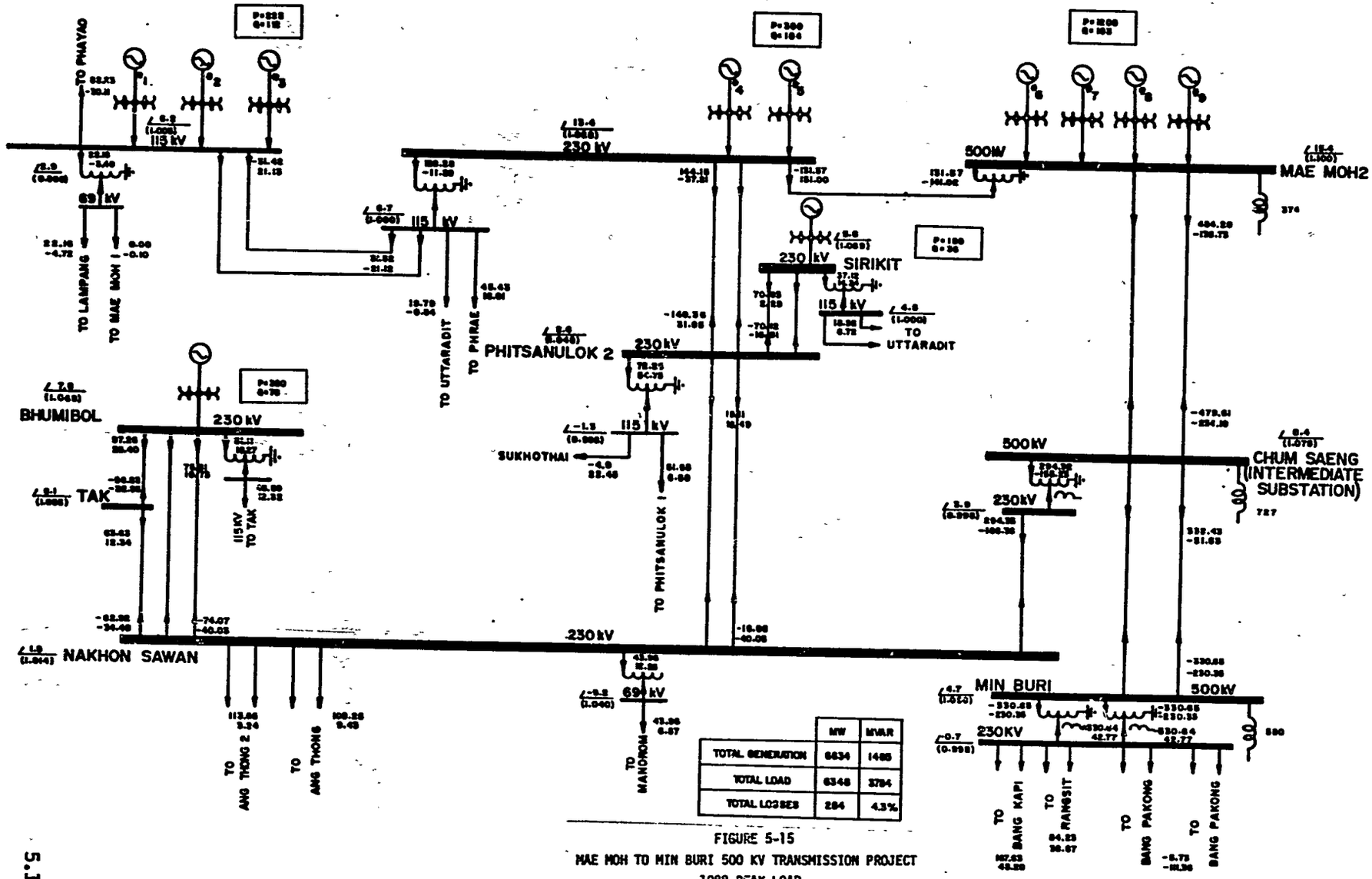

	MW	MVAR
TOTAL GENERATION	6634	1485
TOTAL LOAD	6348	3784
TOTAL LOSSES	284	4.3%

FIGURE 5-15

MAE MOH TO MIN BURI 500 KV TRANSMISSION PROJECT

1988 PEAK LOAD

BASE CASE WITH SWING MACHINE AT BANG PAKONG

GENERATION = 1200 MW

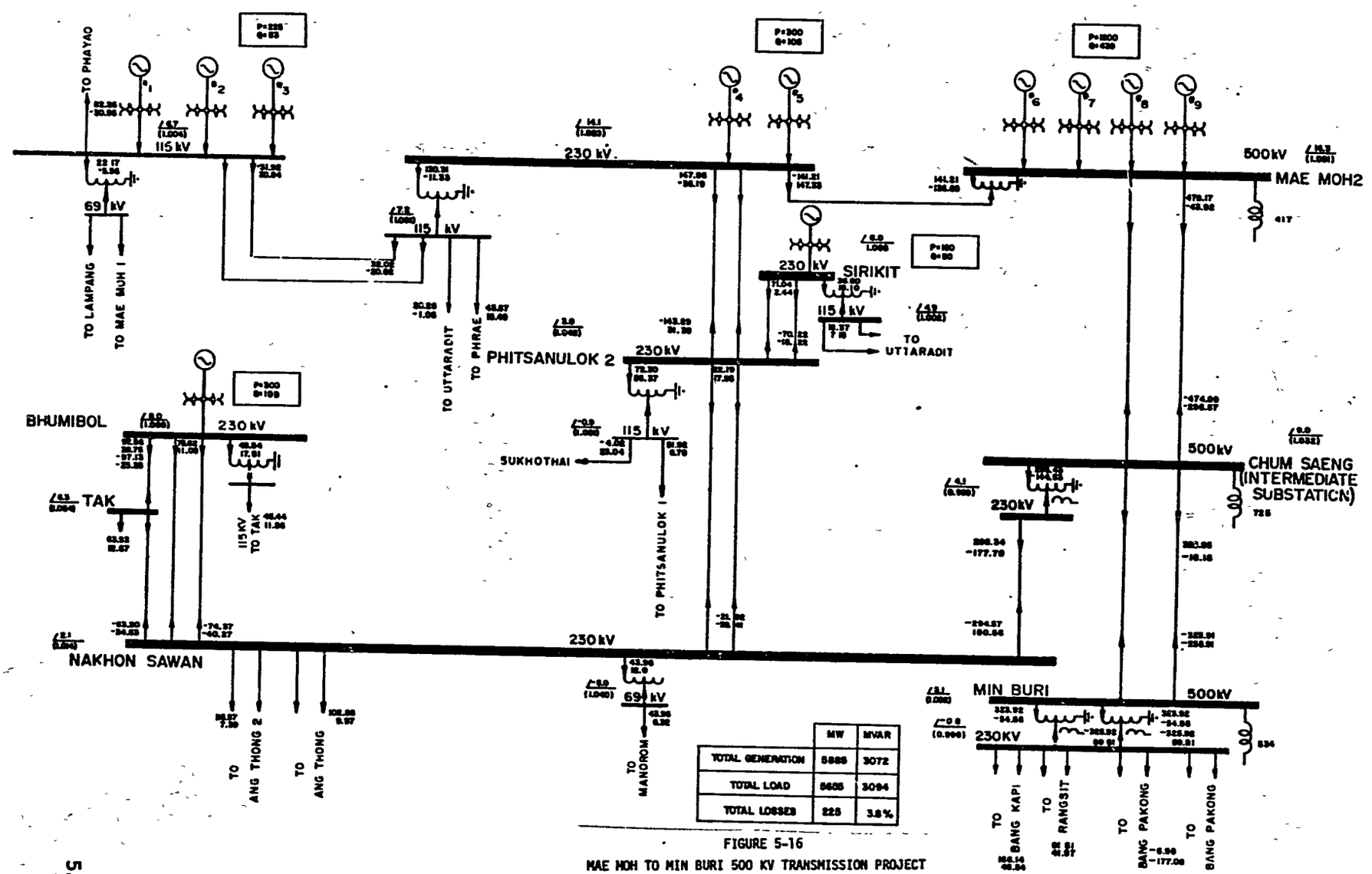

	MW	MVAR
TOTAL GENERATION	5888	3072
TOTAL LOAD	5663	3094
TOTAL LOSSES	225	3.8%

FIGURE 5-16
MAE MOH TO MIN BURI 500 KV TRANSMISSION PROJECT
1988 PEAK LOAD
BASE CASE, REDUCTION OF AREAS 2 AND 3
GENERATION =1200 MW

278

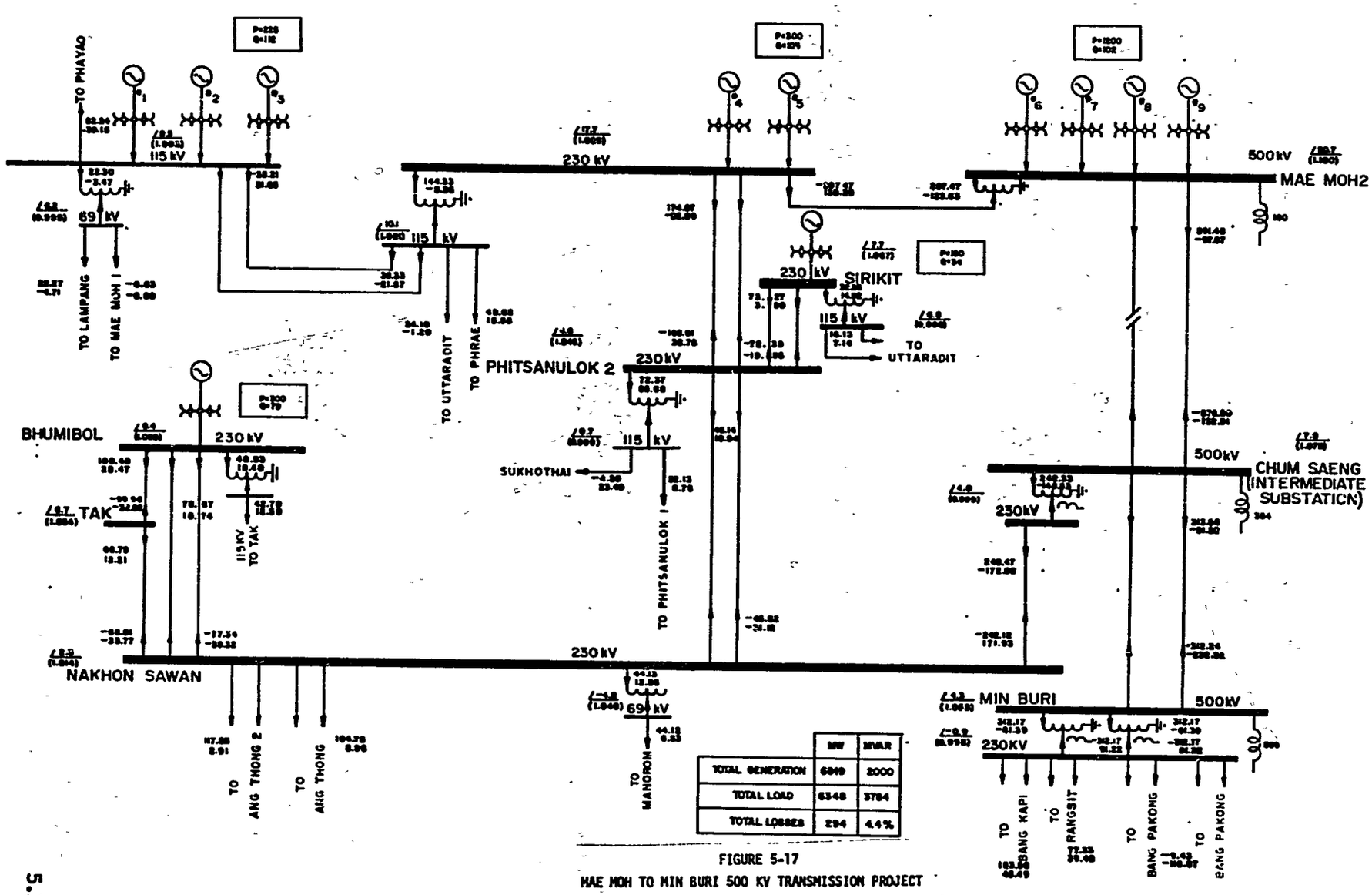

	MW	MVAR
TOTAL GENERATION	6849	2000
TOTAL LOAD	6548	3784
TOTAL LOSSES	294	4.4%

FIGURE 5-17

MAE MOH TO MIN BURI 500 KV TRANSMISSION PROJECT

1988 PEAK LOAD

MAE MOH TO CHUM SAENG LINE OUTAGE CONDITION

GENERATION = 1200 MW

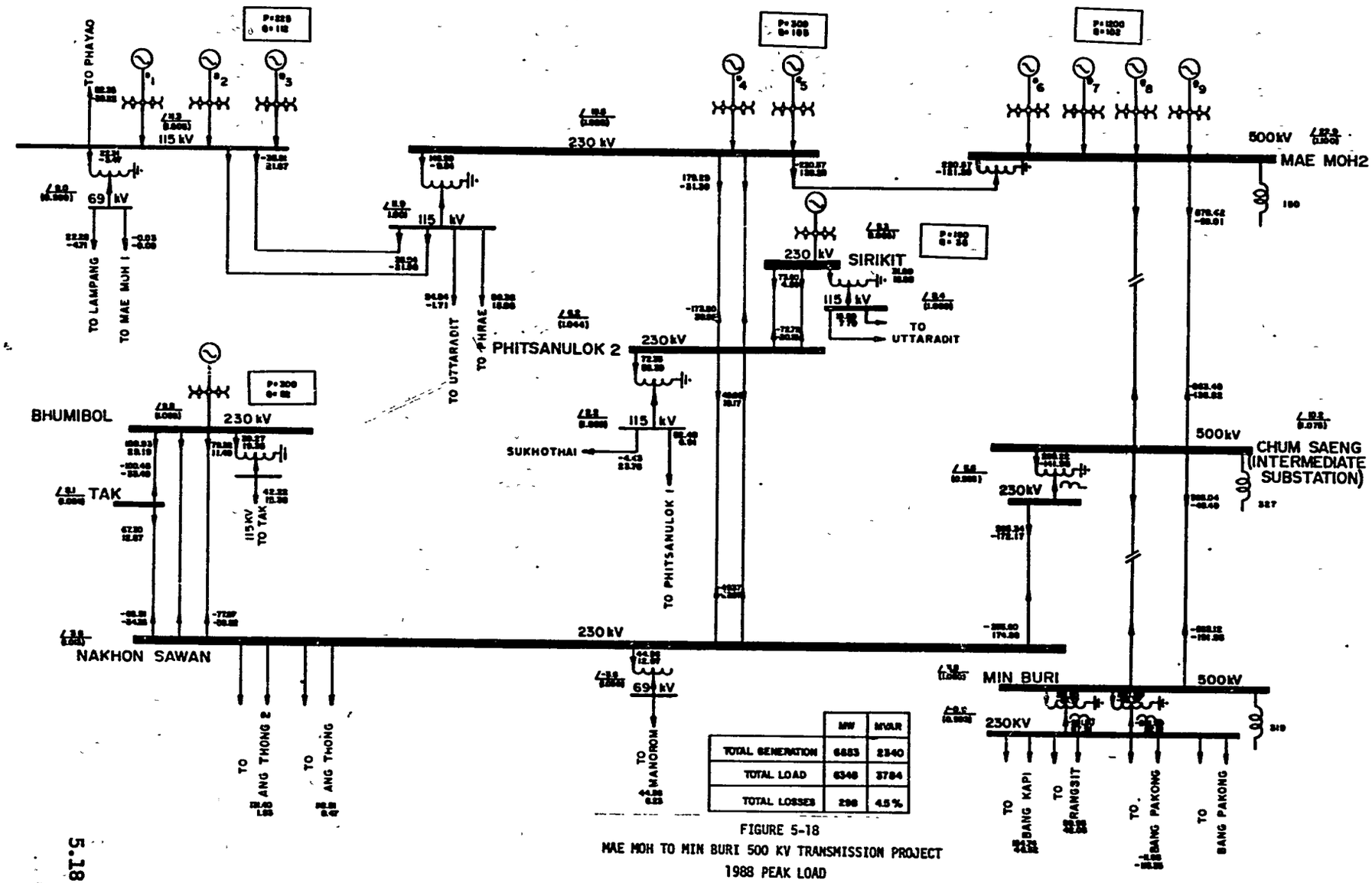

	MW	MVAR
TOTAL GENERATION	6683	2340
TOTAL LOAD	6348	3784
TOTAL LOSSES	298	45%

FIGURE 5-18
MAE MOH TO MIN BURI 500 KV TRANSMISSION PROJECT
1988 PEAK LOAD
MAE MOH TO MIN BURI LINE OUTAGE CONDITION
GENERATION = 1200 MW

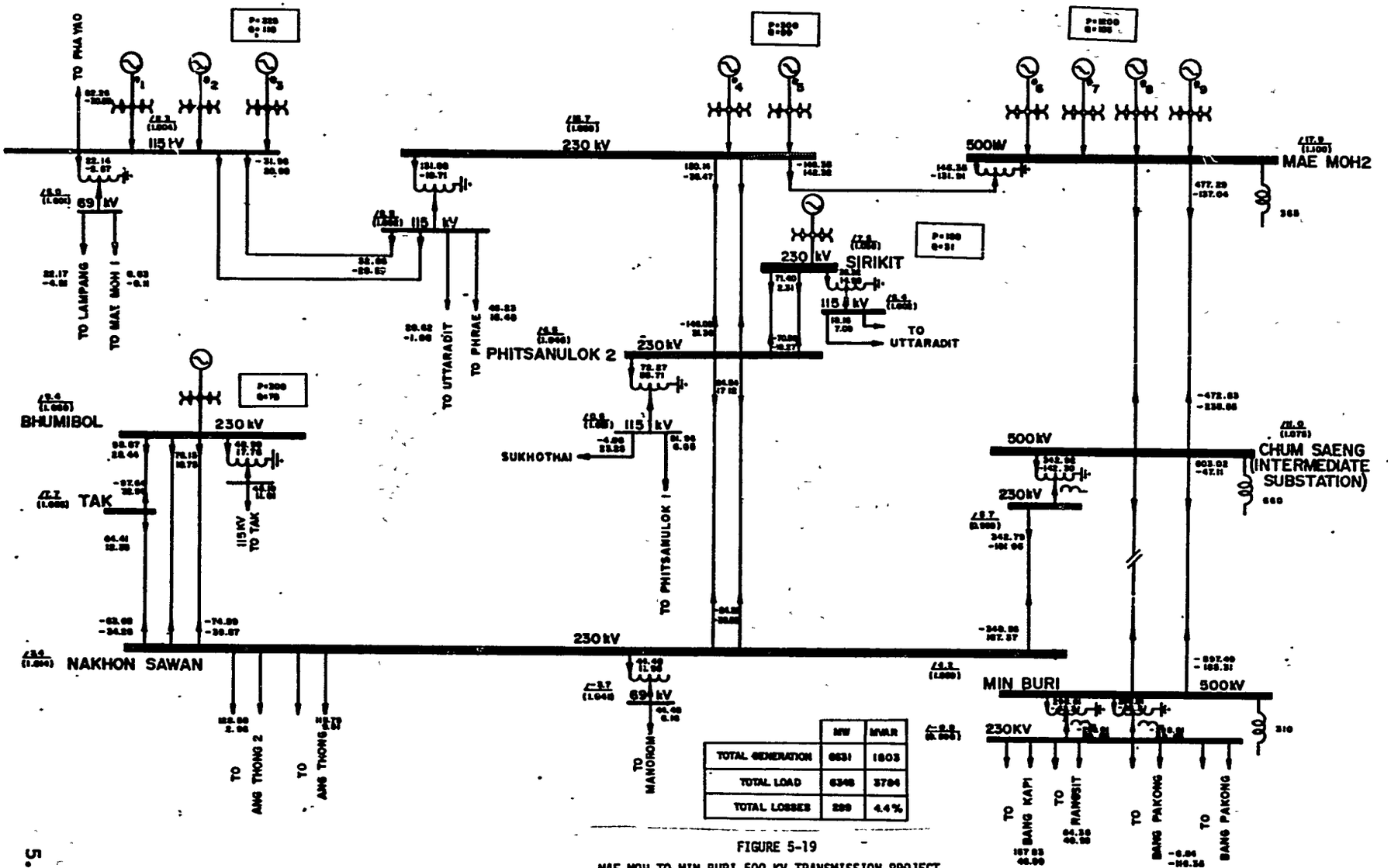

	MW	MVAR
TOTAL GENERATION	6531	1803
TOTAL LOAD	6348	3784
TOTAL LOSSES	289	4.4%

FIGURE 5-19

MAE MOH TO MIN BURI 500 KV TRANSMISSION PROJECT

1988 PEAK LOAD

CHUM SAENG TO MIN BURI LINE OUTAGE CONDITION

GENERATION = 1200 MW

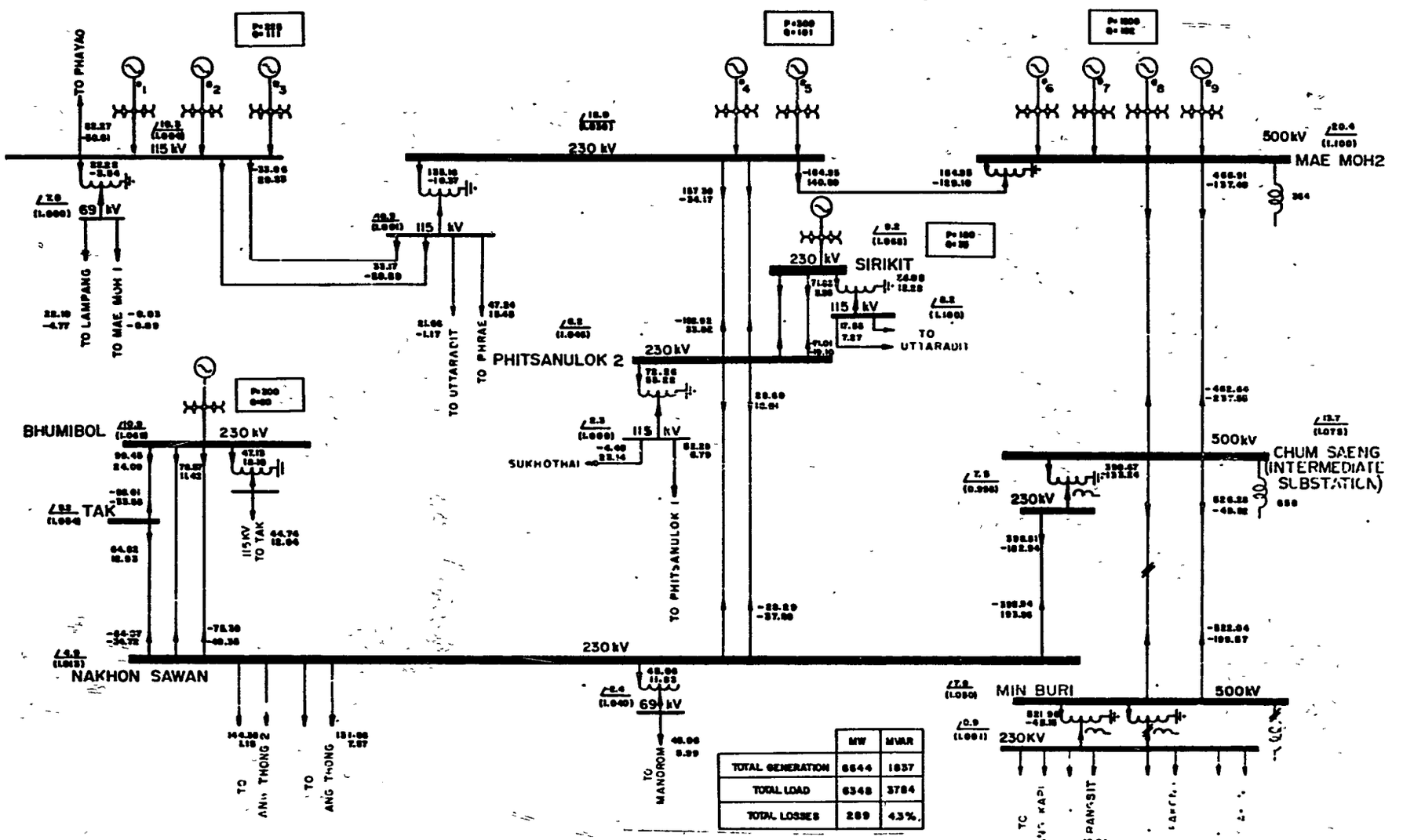

	MW	MVAR
TOTAL GENERATION	6644	1837
TOTAL LOAD	6348	3784
TOTAL LOSSES	269	43%

FIGURE 5-20

MAE MOH TO MIN BURI 500 KV TRANSMISSION PROJECT

1988 PEAK LOAD

CHUM SAENG - MIN BURI, LINE OUTAGE

MIN BURI REACTOR OUTAGE

MIN BURI 500/230 KV TRANSFORMER OUTAGE

GENERATION = 1200 MW

282

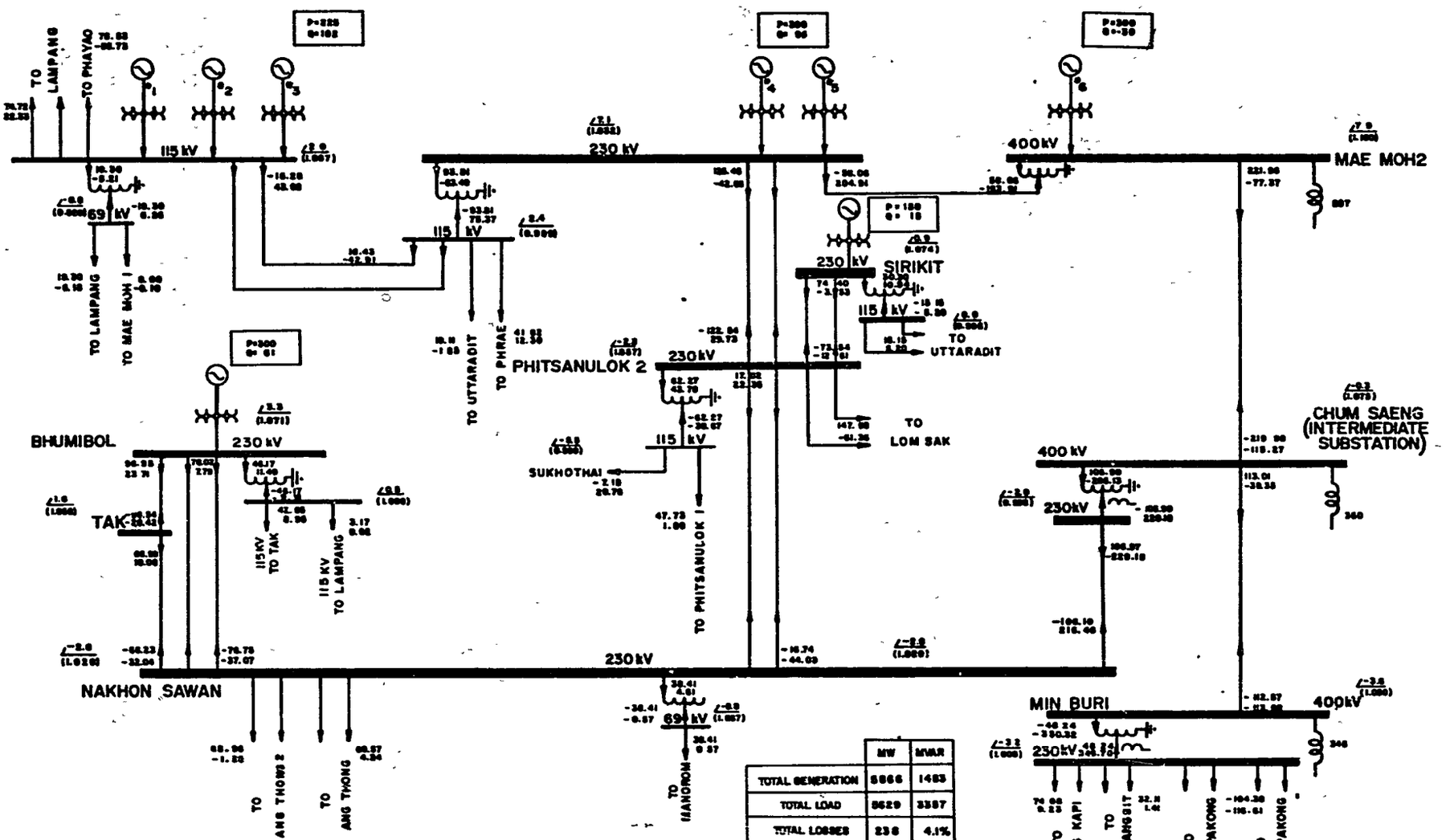

	MW	MVAR
TOTAL GENERATION	5866	1483
TOTAL LOAD	5629	3387
TOTAL LOSSES	236	4.1%

FIGURE 5-21

MAE MOH TO MIN BURI 400 KV TRANSMISSION ALTERNATE

1986 PEAK LOAD

400 KV BASE CASE WITH SWING MACHINE BANG PAKONG

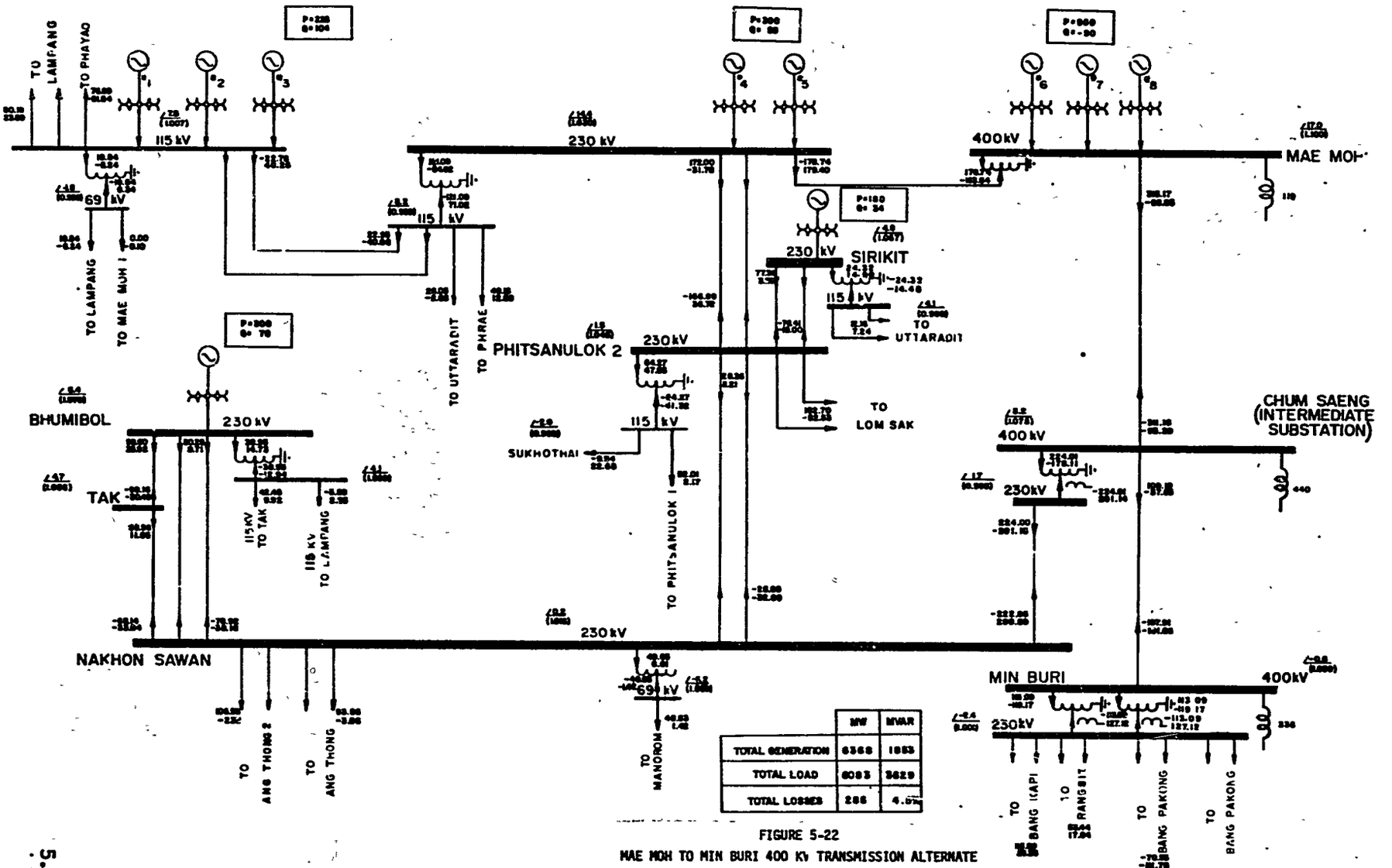

	MW	MVAR
TOTAL GENERATION	6368	1853
TOTAL LOAD	6083	3629
TOTAL LOSSES	285	4.5%

FIGURE 5-22

MAE MOH TO MIN BURI 400 KV TRANSMISSION ALTERNATE

1987 PEAK LOAD

400 KV BASE CASE WITH SWING MACHINE AT BANG PAKONG

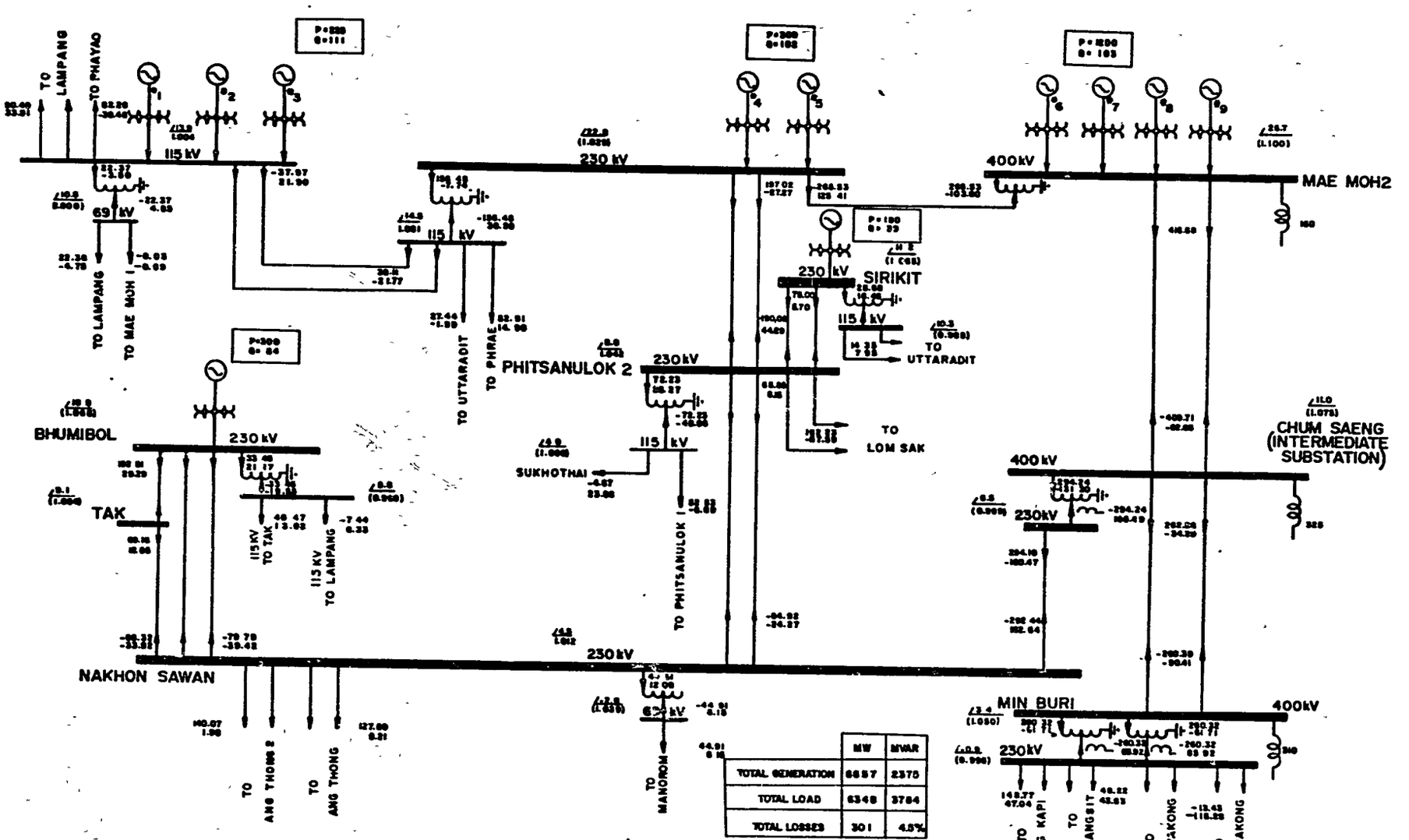

	MW	MVAR
TOTAL GENERATION	6657	2375
TOTAL LOAD	6348	3784
TOTAL LOSSES	301	4.5%

FIGURE 5-23
MAE MOH TO MIN BURI 400 KV TRANSMISSION ALTERNATE
1988 PEAK LOAD
BASE CASE

285

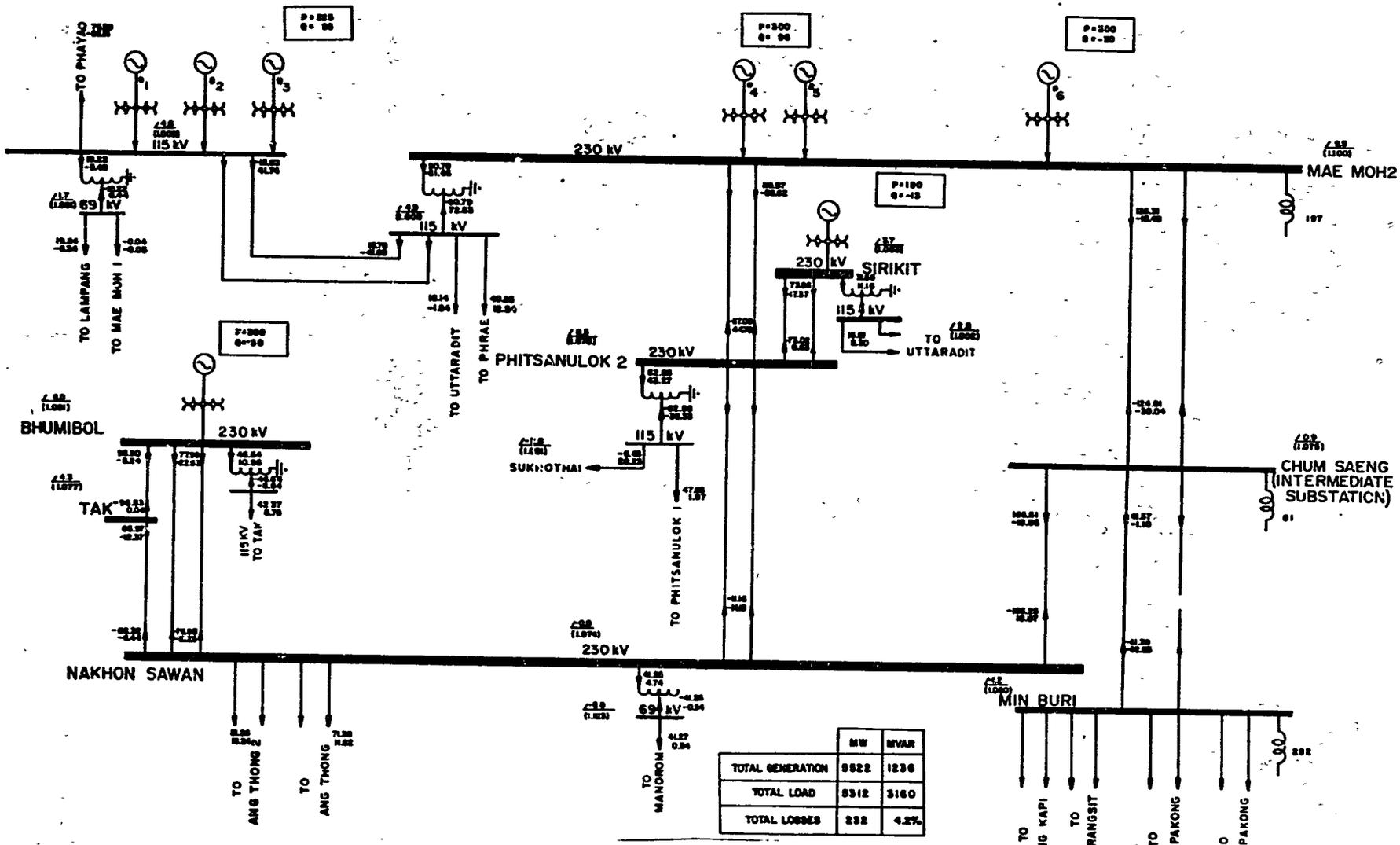

	MW	MVAR
TOTAL GENERATION	5522	1236
TOTAL LOAD	5312	3160
TOTAL LOSSES	232	4.2%

FIGURE 5-24

MAE MOH TO MIN BURI 230 KV TRANSMISSION ALTERNATE

1986 PEAK LOAD

BASE CASE

286

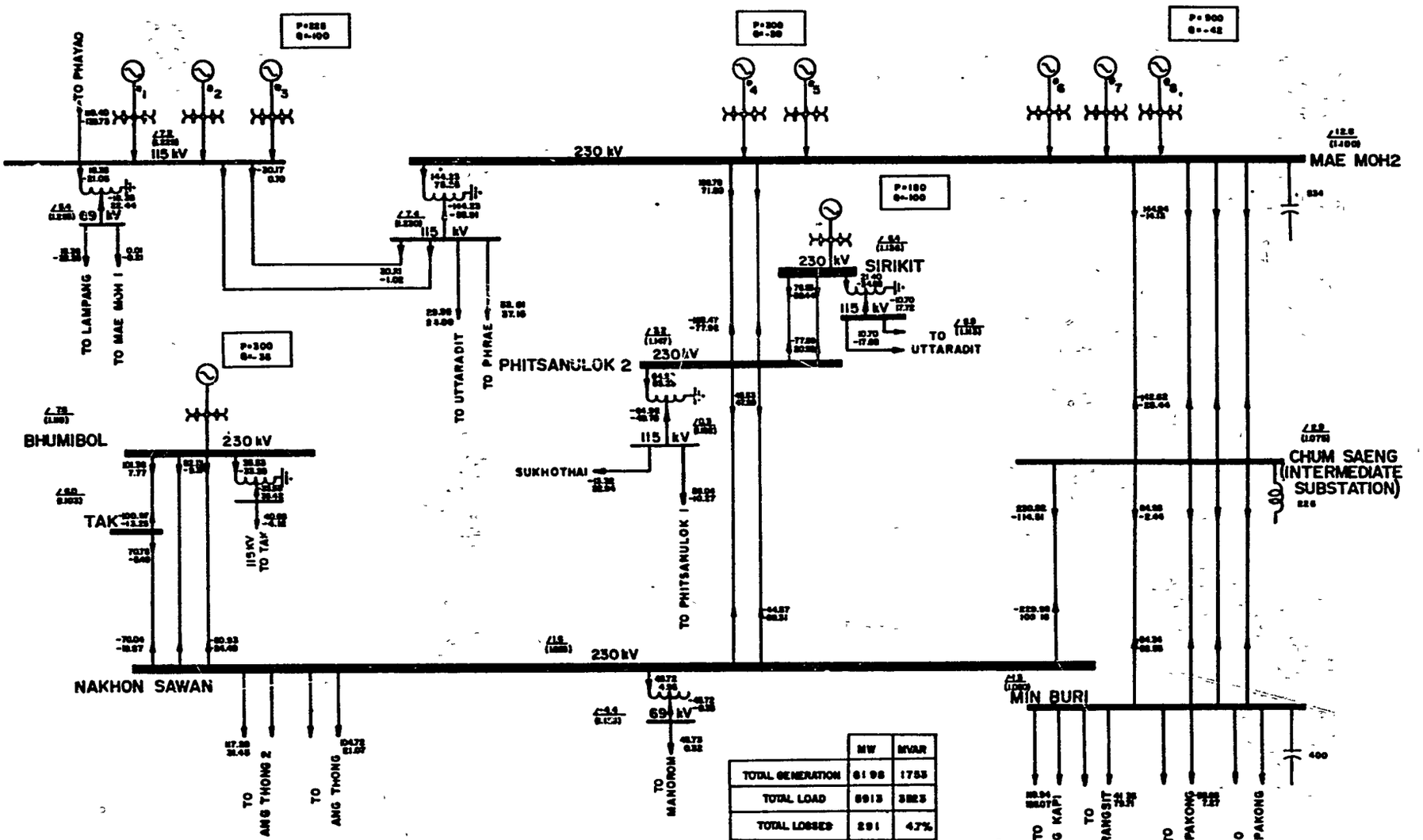

	MW	MVAR
TOTAL GENERATION	6198	1755
TOTAL LOAD	5913	3823
TOTAL LOSSES	291	4.7%

FIGURE 5-25
MAE MOH TO MIN BURI 230 KV TRANSMISSION ALTERNATE
1987 PEAK LOAD
BASE CASE

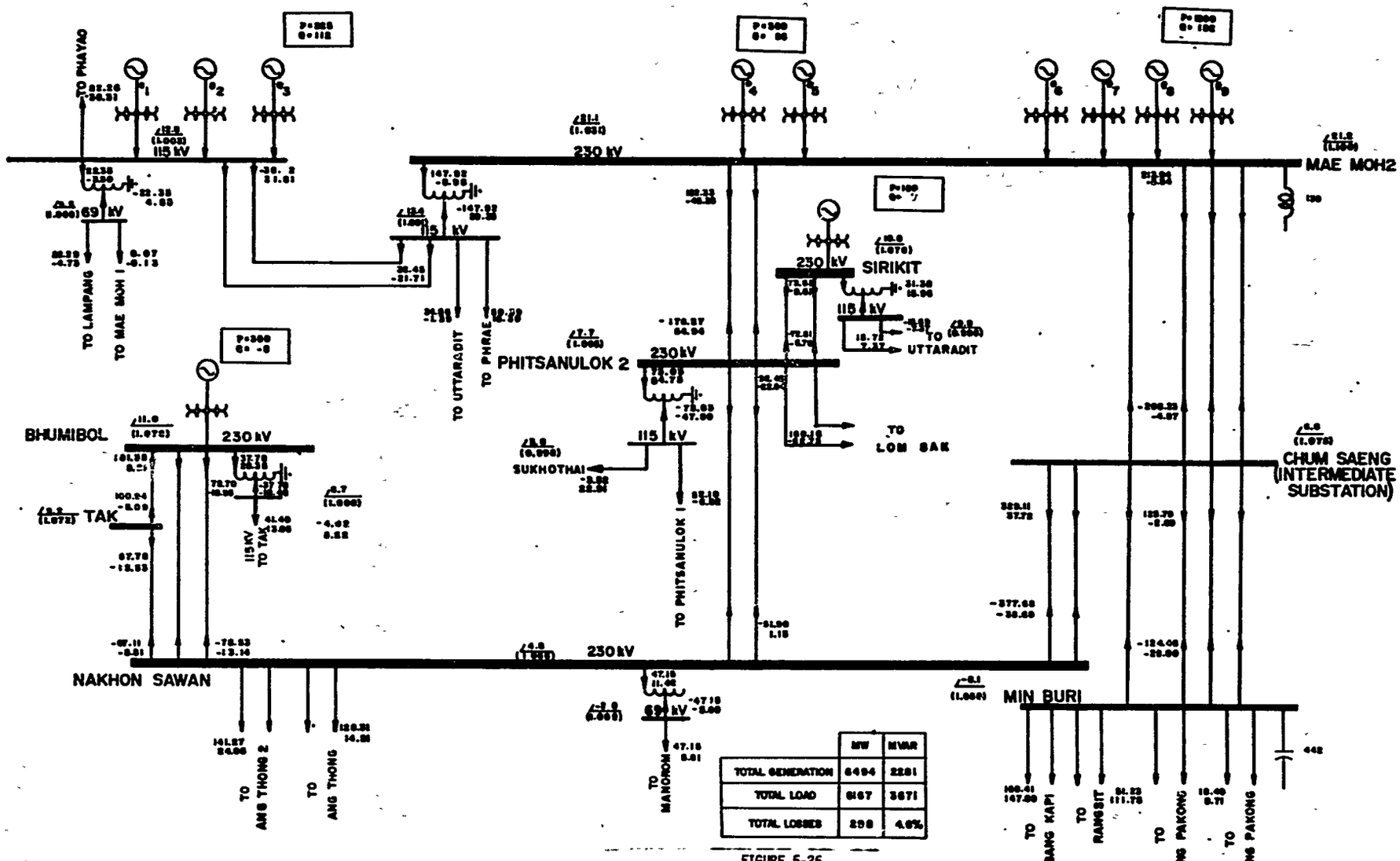

	MW	MVAR
TOTAL GENERATION	6494	2281
TOTAL LOAD	6167	3671
TOTAL LOSSES	298	4.6%

FIGURE 5-26
MAE MOH TO MIN BURI 230 KV TRANSMISSION ALTERNATE
1988 PEAK LOAD
BASE CASE

288

6-1 : TRANSIENT STABILITY OF 1995 EGAT SYSTEM WITH MAE MOH TO MIN BURI 3-400 kV TRANSMISSION LINES

THREE PHASE FAULT AT MAE MOH, CB OPENING TIME = 0.08 SEC

EGAT 1995 TRANS. STABILITY STUDY BASED ON L500A95, REG'S 2 & 3 RED. PLOT OF GENERATOR ANGLES VS TIME

CHARACTER CODES FOR GENERATORS K = 6-BPK-21 1 S = 259- 8B-211 K = 270- 8K-134

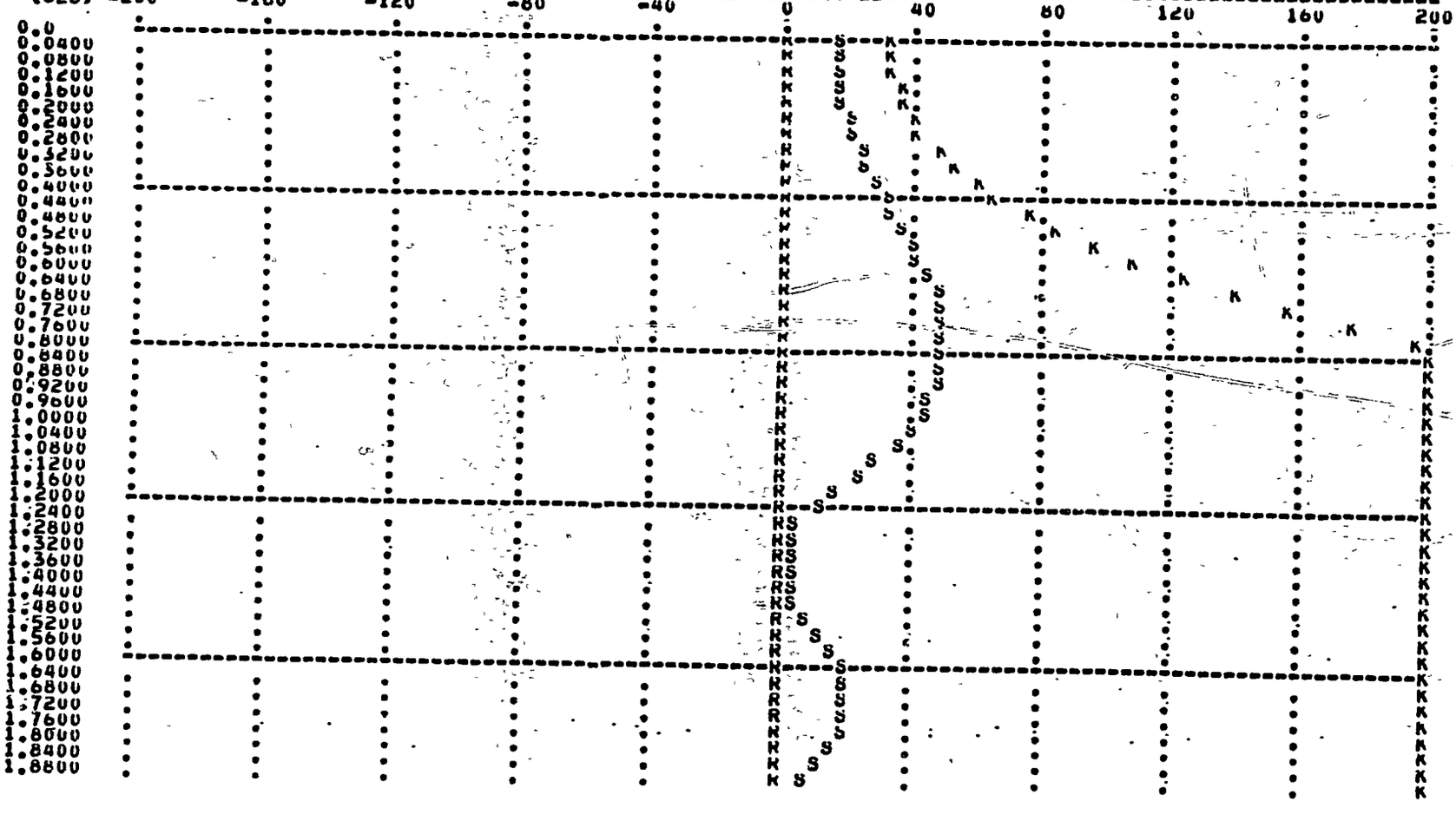

6-2 : TRANSIENT STABILITY OF 1995 EGAT SYSTEM WITH MAE MOH TO MIN BURI 3-400 kV TRANSMISSION LINES

THREE PHASE FAULT AT MAE MOH, CB OPENING TIME = 0.08 SEC

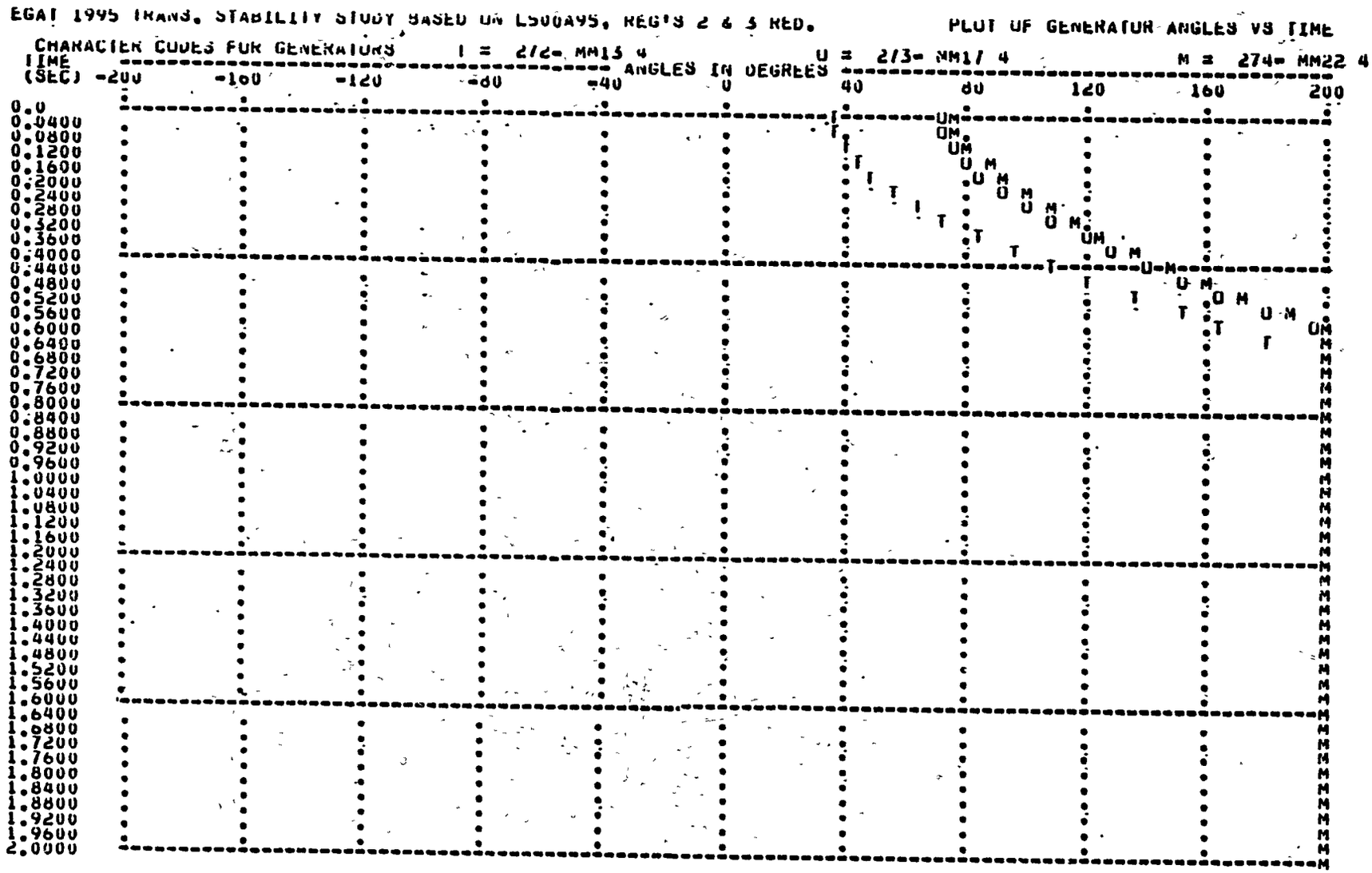

290

LEMCO ENGINEERS, INC.

CONFERENCE REPORT

DATE: September 24, 1980

CLIENT: Bonneville Power Administration

LOCATION: Offices of LEMCO Engineers, Inc., St. Louis, Missouri

SUBJECT: EHV Transmission System Study for Electric Generating Authority of Thailand

ATTENDEES:

EGAT REPRESENTATIVES	LEMCO REPRESENTATIVES
Mr. Sirid	W.E. Sebastian
Mr. Somkiet	Dr. K. Shah

During Mr. Sirid and Mr. Somkiet's visit to St. Louis, additional discussion was held on the study and the following discussion and or requests were addressed:

Modifying the 400 kV criteria to reflect voltages of .95 to 1.1 on a per unit base of 380 kV and same at 500 kV on 500 kV base.

Consider an emergency loading factor for EGAT's existing facilities consistent with 45°C over 40°C ambient and full load is 20°C over 40°C ambient.

Modify load flow drawings showing figure numbers more conspicuously and stating the generation at each unit near its symbol; and stating system losses for each base case.

Mr. Somkiet also desires drawings be included that indicate flows in much more of the EGAT system in the Bangkok area.

Continued

Mr. Somkiet also requested that system loads be predicted in accordance with a new load predition study dated August, 1980, which he had presented at the meeting in Portland on September 22, 1980. He also requested LEMCO to re-check our unit dispatching against the chart he had furnished during our meeting in Thailand.

Mr. Somkiet also requested that LEMCO consider a total of three sequences for the power development plans including:

Sequence 1: Original study using original power development plan including 2400 MW at Mae Moh with units 10-13 in 1995.

Sequence 2: The sequence presented in the Portland meeting with Mae Moh units 10-13 in 1995.

Sequence 3: Sequence 2 through 1995 without units 10-13 at Mae Moh.

He also requested the Sequence 2 above be studied with Mae Moh Unit 7 on both the existing 230 kV bus and also on the EHV bus.

With the new coal fired generation southwest of Bangkok, the EHV line would probably be constructed between Sai Noi and the Sringarind Switching Station in 1987 and another in 1990.

LEMCO ENGINEERS, INC.

CONFERENCE REPORT

DATE: September 22, 1980

CLIENT: Bonneville Power Administration

LOCATION: Offices of BPA, Portland, Oregon

SUBJECT: EHV Transmission System Study for Electric Generating Authority of Thailand

ATTENDEES:

EGAT REPRESENTATIVES	BPA REPRESENTATIVES	LEMCO REPRESENTATIVES
Mr. Sirid	R.E. Eastvedt	W.E. Sebastian
Mr. Somkiet	Len Bradshaw	Dr. K. Shah
	Mike Raschio	G.W. Holmes
	Bill Middlestadt	
	Dean Perry	

The purpose of the conference was to deliver, review and discuss the interim report for the project.

In as much as a problem had developed a progress report was presented and discussed.

EGAT and BPA personnel were given copies of the report and a discussion ensued concerning the methods utilized and the result predicted.

GENERAL

EGAT believes that the assumption that 13% of the right-of-way would require piling foundations was too low

EGAT wishes LEMCO to study a delta configured double circuit tower in the final report. EGAT will furnish a determination of the size vehicle for short circuit considerations later.

293

LEMCO's approach centered around preparing preliminary designs and cost estimates for numerous conductors, tower configuration, and soil conditions for each alternative. These alternatives involved as near as possible the same criteria considerations for each system and voltage.

The total economics showed that the 500 kV system had the lowest present worth of any alternative beginning in 1993 and continuing through the total period.

The system technical considerations discussed included that our stability studies had been unable to predict a satisfactory transient stability model for the addition of an additional 1200 MW (total 2400 MW) on the Mae Moh EHV bus in 1995 nor a stable system with 4 X 660 MW of the coal fired generating units connected to Min Buri in 1992. For these reasons LEMCO was not presenting an interim report recommending a preferred voltage.

EGAT recommended that an alternate sequence of system generation be considered and studied. This sequence included Mae Moh units 1 - 5 as originally scheduled; Unit 6 to be considered as 6A and 6B @ 150 MW each with in-service 1986 and connected to the existing 230 kV bus. Unit 7 rated @ 300 MW, connected to the existing 230 kV bus and scheduled in-service 1987. At this time the initial EHV line would be constructed and operated at 230 kV until additional generation was constructed at Mae Moh.

Also in 1987 a 600 MW coal fired unit would be constructed southwest of Bangkok and line(s) built to the Sai Noi substation northwest of Bangkok and a double circuit line between Sai Noi and Min Buri. It is assumed that these additional facilities would be of the same general designs recommended for the Mae Moh Project.

Install a D/C 230 kV line between Saraburi 2 and Nakhon Ratchasima.

Unit 2 @ 600 MW would be constructed at the south coal fired installation in 1990.

Ing Yom with 70 + 80 MW in 1990 and 210 + 240 MW in 1993. Mae Moh #8 @ 300 MW in-service 1991 on the EHV bus. Mae Moh #9 @ 300 MW in-service 1992 on the EHV bus. South coal fired #3 @ 600 MW in-service 1992. South coal fired #4 @ 600 MW in-service 1993.

EGAT requested the economic evaluation of the Mae Moh alternatives be performed on a "cost stream" system utilizing the following methods and/or factors:

- Losses to assume a base condition either system or year
- Utilize a constant 1980 price for all capital expenditures
- Develop a construction cash flow and consider 1980 cost as a one time annual expense
- Demand losses to be installed at $84/KW-YR and not escalated

Energy losses computed per Loss Factor = .20 (load factor) + 0.8 (load factor)^2 load factor to be 76% and charged annually with 3% escalation at .852 ฿/KWH or 40 mills.

295

Continued

Additional O & M computations based on length of lines and substation equipment will be furnished by BPA. LEMCO will attempt to prepare a cost comparison with EGAT's stated cost for 230 kV facilities and arrive at new O & M cost for each alternative. The cost will be installed as an unescalated annual cost.

EGAT considers the life of facilities at 25 years for generating plants; 40 years for transmission lines and 25 years for substations.

For this study EGAT wishes the economic study prepared for 25 years and considering facilities on a straight line depreciation, the lines would have salvage value which is considered a credit in 2011 and install as such in the stream. All cost (credits) are to be totaled based on their 1986 present worth and the alternative systems compared accordingly.

EGAT wishes the LEMCO Interim Report to be reorganized considering the salient factors for each alternative in its own appendix; rather than the salient factors of all alternatives organized as individual appendixes.

EGAT also further requested that alternate location for the intermediate substation (Chum Saeng) be considered including possibly Phitsanulok or Saraburi. This request had previously been made during our visit to Thailand in July but no work has been performed on it at this time.

296

LEMCO ENGINEERS, INC.

CONFERENCE REPORT

DATE: September 9, 1980

CLIENT: Bonneville Power Administration

LOCATION: Offices of BPA, Portland, Oregon

SUBJECT: EHV Transmission System Study for Electric Generating Authority of Thailand

ATTENDEES:

CLIENT REPRESENTATIVES	LEMCO REPRESENTATIVES
Mike Rashio	Ken Williams
Bill Middlestadt	Dr. Shah
Duane Birkeland	Gordon Holmes
Richard Perlas	
Fred Schaufelberger	
Len Bradshaw	

The purpose of the conference was to report to BPA on the status of the study and to receive their guidance on the balance of the study and instructions for the interim report.

GENERAL

A short briefing was given on the background of the study and additional requirements which had arisen since the commencement of the work.

These included the study of an additional major hydro project designated Ing Yum and an additional 4 X 660 MW generating facility south of Bangkok. The Ing Yum facility was to be connected to the Mae Moh 230 kV bus and the "south plant" was to be interconnected with the Min Buri 500 kV bus.

LOAD FLOW STUDIES

BPA personnel were briefed on the planning criteria being utilized and on those load flow studies and stability studies which had been completed through 1988 for each alternate system and which included a total of 1200 MW of generation at Mae Moh. The results of these studies were generally acceptable to the BPA personnel, although they suggested that the 230 systems be connected at Mae Moh and that a case be studied wherein the transformer tie between the Mae Moh 500 and 230 kV busses at Mae Moh be faulted.

COST STUDIES

BPA personnel were briefed on the cost estimating process being used by LEMCO which included preparing a preliminary line and substation designs for each system and utilizing previously bid Thailand unit cost for estimating where applicable. Other prices utilized were from U.S. and foreign manufacturers price books where applicable. Attempts are generally being made to get both 400 and 500 kV substation equipment prices from manufacturers who market equipment of both voltages.

Our 230 kV prices are taken from actual EGAT estimates for similar 230 kV facilities. BPA personnel indicated that there appeared to be an unexplained price differential on transmission line cost between the 230 kV estimates and other voltages. LEMCO was instructed to prepare similar criteria for 230 kV lines and utilized the same unit prices for cost estimates.

Based on the previously determined transmission system cost and the load flow cases indicating the requirements for each alternative transmission system, BPA personnel were briefed on LEMCO's preliminary determinations for relative losses between the alternatives.

BPA generally concurred with the preliminary determination of cost including losses; but suggested the load flow studies allow the computer to calculate the actual system losses. Although this method would give total system losses, some of which were not attributable to this transmission alternative, the relative system losses would be more accurate and satisfactory for the alternative comparison.

LEMCO briefed BPA on our understanding that Mae Moh was eventually planned to have approximately 2400 MW of capacity installed on the EHV buss but that EGAT had not given load or generation forecast past 1992. BPA personnel concurred with the assumption that this additional capacity should be studied for in-service 1995 and with the inclusion of the 1995 generation the study could be completed.

MINUTES OF MEETING

DATE: May 22, 1980

PLACE: LEMCO ENGINEERS, Inc.

PARTICIPANTS:

BPA	SHAH and Assoc.	LEMCO
Mr. R. B. Eastvedt	Dr. K. Shah	G. W. Holmes J. C. Curran W. E. Sebastian

PURPOSE:

To review the proposed Planning Criteria and the project in general.

DISCUSSION:

1. The proposed Planning Criteria was discussed. Modifications and additions were made. A copy of the agreed on Planning Criteria is attached.

2. The question was raised as to whether the system should be considered in normal operating condition when a single contingency takes place. A telex will be sent to LEMCO's consultant in Thailand requesting that the question be resolved with EGAT.

3. Item I.B.1 - It will be necessary to review the 230 kV system during line fault conditions on the EHV system taking this contingency into consideration.

4. Item II.A - Stability - Five cycle clearing will be investigated and if the system is marginal 4 and then 3 cycle clearing will be investigated.

   There will be no reclosing for multi-phase faults.

5. Item III.A - Reactive requirements - HV and EHV line connected reactors should be avoided if possible.

6. Table 1., Voltage Limitations, will be revised to show conditions for 500 kV, 400 kV and 230 kV.

7. All known generation will be included in the stability study.

8. LEMCO must notify BPA well in advance of date for reviewing the draft interim report so personnel from EGAT can be invited to U.S.

9. Some 35mm slides of insulator strings received from EGAT on contamination were reviewed and discussed. There was no conclusion except that a contamination problem does exist in the Bangkok area on the 230 kV line.

10. The next meeting will be held probably during August to review the interim report unless need for clarification on some item requires a prior meeting.

July 30, 1980

Mr. Robert B. Eastvedt
Chief Engineering Econ. Engineer
Bonneville Power Administration
Branch of System Engineering-EO
P. O. Box 3621
Portland, OR 97208

Subject: BPA/EGAT Project
MAE MOH - Bangkok EHV Transmission

Dear Mr. Eastvedt:

We are enclosing one (1) copy of a Conference Report prepared as a result of our visit to Thailand on July 6-16, 1980.

We believe the data provided will be of immeasurable assistance in completing the Base Case Study, which we will forward as soon as completed.

Our observation of the right-of-way, plant, substations and methods of construction will be very valuable in completing our study.

We did not find EGAT personnel lacking in any technical abilities to install, maintain or operate any of the sophisticated or state-of-the-art type equipment that we were contemplating for this project.

We are looking forward to meeting with you on August 26, and believe we will have data and studies well advanced for that conference.

Sincerely,

LEMCO ENGINEERS, Inc.

Gordon W. Holmes, Jr.
Project Manager

Enclosure

302

CONFERENCE REPORT

DATE: July 7 - 13, 1980

CLIENT: Bonneville Power Administration/EGAT

LOCATION: Held at EGAT Offices Nonthaburi, Thailand

SUBJECT: MAE MOH-BANGKOK EHV Transmission Project

ATTENDEES: EGAT

Mr. Srid Aphaiphuminart	Director-Planning Department
Mr. Somkiet Phaloprakarn	Chief-System Planning Division
Mr. Viroj Nopkhun	Chief-Power Economic & System Operation Planning Division
Mr. Siridat Glaunkwamndee	Asst. Chief-System Planning Division
Mr. Sommart Promdan	Head of Power Development & Energy Planning & Analysis Sect.
Mr. Prakob Dhienhirunya	Head of Power System Planning Sect.
Mrs. Woraluck Aphaichartbuth	Economist-System Planning Division

LEMCO

Mr. D. Ralph Young	President
Mr. Gordon Holmes	Project Engineer
Mr. David Tzou	System Analysis

DISCUSSION

The Planning Criteria Draft of June 3, 1980 was presented and discussed; EGAT does not wish the Chum Saeng Substation to be considered as final. EGAT desires an Intermediate Substation but desires studies and recommendations concerning it's location at either Chum Saeng, Phitsanulok 2 or Saraburi 2. stability should be tested on the proposed system at 4-5 cycles for proposed EHV system; 5-6 cycles on existing 230 kV system and 6-7 cycles for 115 kV.

EGAT does not desire any line loaded above 100°C conductor temperature for planning; therefore IVa, Table II should be modified accordingly.

REF: Our Telex Of June 13

Questions 1-6 on Ing-Yom, see Representation on SK1-3, 1-2 & 1-3
Questions 1 & 2 on S.S.R.; see data on SK2-1

REF: Our Telex Of June 25, 1980

Question #1 - Figure 6-4 is proper representation of Bang Pakong Generation. The combined cycle units consist of 2 blocks each block consist of 4 combustion turbines rated at 60 MW and one steam turbine rated at 120 MW. Each system is operated as a block and is better shown in SK3-1. The steam units S3 & S4 will not be constructed during the time frame of this study. Figure 6-4 shows a double circuit 230 kV line between Bang Pakong and Min Buri which will be in-service May 83; a second identical line will be in-service in July 84; this second line is not shown of Figure 6-4 but is listed on Table 3-3.

Question #2 - The nuclear units are no longer planned during the time frame of this study. On Figure 6-4 delete the nuclear 230 kV bus and the double circuit (3 kM) line to AoPhai, also delete the double circuit (56 kM) line between AoPhai and Bang Pakong.

In lieu of the nuclear plant establish a 500 kV bus 120 kM south of Min Buri and connect to Min Buri with a double circuit 500 kV line of the configuration determined for Mae Moh - Min Buri Line. Establish 2-660 MW thermal units connected to this bus in 1990 and two more in 1992. No connection to the 230 kV system are contemplated for this plant at this time. See SK4-1

Question #3 - The impedance of the Mae Moh 115/69 kV transformer is represented on SK5-1.

Question #4 - There is no direct line between Chiang Mai and Mae Moh 115 kV. A double circuit 115 kV line will be in service from Mae Moh 115 kV in 1988. This line will extend between Mae Moh 115 kV and Kud Hydro with connections to Lamphun 2 and Chiang Mai 2 busses. One 115 kV circuit will be connected to the Lampang 2 - 115 kV bus and a double 115 kV line (approx. 5 kM) will be constructed between Lamphun 2 and a new 115 kV station Chiang Mai 3. A 115 kV line between Bhumibol Dam and Lampang 2 will be in-service in 1988. SK6-1 is an accurate representation of Figure 6-11 & 6-12. Loads on each bus have been determined and furnished.

REF: Our Telex Of June 24, 1980

Question #1 - The Lom Sak Substation is proposed to tie several Hydro plants to the EGAT 230 kV system units include 2 x 13 MW (Nam Man), 2 x 12 MW (Upper Pasak), 2 x 29 MW (Nam San), 1 x 18 MW (Nam Loei) and will be in-service in 1988.

Question #2 - The number of transformers required at Min Buri and at the Intermediate Substation and their rating and time of installation are within the requirements of this study to determine.

Question #3 - The capacities listed in Tables 7-2 and 7-3 are approximate for planning purposes at the present time. Actual design will be determined by final design. For purposes of this study we should make consistent, realistic assumptions similar to the data listed.

Question #4 - EGAT does not utilize for planning purposes equipment capacities beyond its 65°C rating.

Question #5 - EGAT does not utilize an emergency MVA rating for transmission lines and have furnished their top ampacity rating for each conductor contemplated. The following ratings are based on 60°C rise over 40°C ambient with 2.2 KM/HR wind velocity with no derating for multi-conductor bundles.

1272 MCM	42/7	1308.4 AMPS
795 MCM	42/7	988.3 AMPS
477 MCM	26/7	709.7 AMPS
336.4 MCM	26/7	564.9 AMPS

Question #6 - Total [illegible]rikit Hydro presently has 3 x 125 MW units with 3 x 150 MVA transfon[illegible]s. An additional 150 MW unit and a 190 MVA transformer will be installed in 1993 during stage #3 of the Ing-Yom Project.

Question #7 - Erawan Hydro is same as Ban Tha Thong Mon

Question #8 - South Bangkok Thermal Plants consist of 2 x 225 MVA and 3 x 370 MVA transformers.

Question #9 - Bang Pakong will have only 2 x 550 MW thermal units during the time frame of this study. The auto transformer at Bang Pakong is 1 x 200 MVA 230/115 kV.

Question #10 - The nuclear units at Ao Phai are no longer considered 4 x 660 MW with 500 kV lines to Min Buri as previously discussed are appropriate.

Question #11 - The unit at Kang Krachan Dam (Fig 6-8) is 19 MW with a 21.5 MVA FA transformer.

Question #12 - Ban Tha Thung Na (Fig 6-8) also known as lower Qual Yai Hydro is 2-19 MW units with 2 x 17.7 MVA OA & 23.6 MVA FA transformers.

Question #13 - Delete

Question #14 - Chulabhorn Dam (Fig 6-10) 2 x 20 MW units with 2 x 22.5 MVA transformers.

Question #15 - Na Khon Ratchasima transformer is 16/21.3 MVA OA/FA.

Question #16 - Udon Thani transformer is 16/21.3 MVA OA/FA.

Question #17 - Nam Ngum is a Hydro Plant in Laos from which excess power is purchased by EGAT; delivery schedules were furnished to D. Tzou. Transmission representation may be as shown SK7-1 & 7-2.

Question #18 - Nam Ngum is similar to Fig 6-10 without unit 5 and units as shown on SK7-1.

Question #19 - Sirindhorn Dam's third unit is also 12 MW identical to units 1-2.

Question #20 - Ubon Ratchathani 1 (Fig 6-10) no gas turbine is presently planned at this location.

Question #21 - Kud Dam units are scheduled in-service in 1988 see SK8-1.

Question #22 - Sirikit Dam will not have a fourth unit before 1993 with completion of the Ing-Yom Hydro Project Phase 3.

Question #23 - Lower Quae Yai Hydro is 2 x 19 MW shown as Ban Tha Thung Na on Figure 6-8.

Question #24 - The proposed nuclear units near Ao Phai are deleted in favor of 4 x 660 MW units previously described.

Question #25 - Srinagarind Dam will consist of 5 units 3 x 120 MW & 2 x 180 MW see SK9-1. The pumped storage (4 x 250 MW) on SK9-1 and shown as Huai Klong Ngu on Fig 6-4 is proposed after 1995.

Question #26 - Bus tie transformers at Sirikit Dam are 2 x 66.7 MVA.

Question #27 - One 30/40/50 MVA Bus tie transformer presently installed at Nakhon Sawan with second 30/40/50 proposed for 1984.

Question #28 - Ang Thong 2 - 230 kV will receive 2 x 200 MVA transformers in 1988.

Question #29 - Ang Thong 1 - 230 kV will receive 1 x 200 MVA 230/115 kV transformer in 1981.

Question #30 - Sringarind 230 kV will have 1 x 100 MVA 230/115 kV transformer in 1979.

Question #31 - There are 3 x 66.7 MVA 230/115 kV transformers at Bangkok Noi.

Question #32 - Prachuap Khiri Khan has 2 x 60/80/100 MVA 230/115 kV transformers.

Question #33 - LEMCO was instructed to consider a 40 MW interchange at the interface between Region 1 & 3 and to reframe from modeling the system in Region #3. EGAT will assume this region as self sufficient for the present and near future.

REF: Telex Of June 27, 1980

Question #1 - Loads on Chiang Mai 1, 2 & 3 are as shown on SK6-1 with CM-1 eliminated; consider 70% of the load shown in Table 1-8 on CM-2 115 kV Bus and 30% on CM-3 115 kV Bus.

Question #2 - Unit 7 at Bhumibol Dam is 133 MW.

Question #3 - Lower Quai Yai Hydro is Ban Tha Thung Na 2-19 MW of Fig 6-8.

Question #4 - Ban Tha Thong Mon is same as Erawan on Fig 6-4 4 x 250 MW units.

Question #5 - Gas Turbines to be retired are all present unit and listed on page A-135, Appn. II, Table II-1.

Question #6 - The 300 MW miscellaneous Hydro is actually 334 MW and is listed on SK10-1.

Question #7 - Huai Klong Ngu pumped storage will be constructed after 1995.

Question #8 - D. Tzou was provided load information on all busses.

Question #9 - Lines may be loaded as shown in Question #5 to telex of June 24, 1980.

Light loading for Mae Moh lines should be considered as 60% EGAT provided a booklet on Data from System Operating Department which details information as shown in its table of contents SK11-1 & 11-2.

Prepared by:
LEMCO ENGINEERS, Inc.

Gordon W. Holmes, Jr.

ING - YOM 1987

SK-1-1

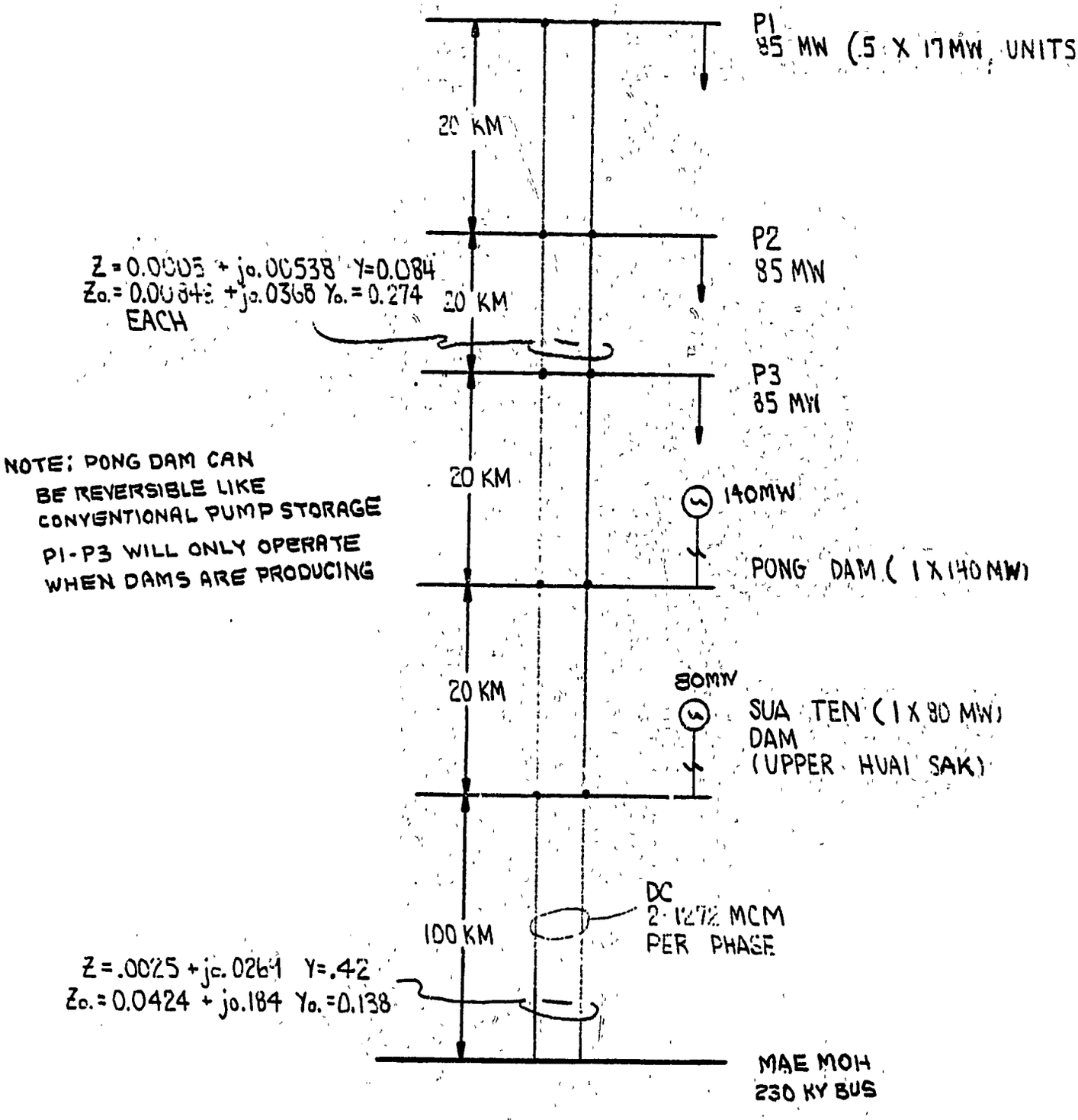

310

ING - YOM 1-190

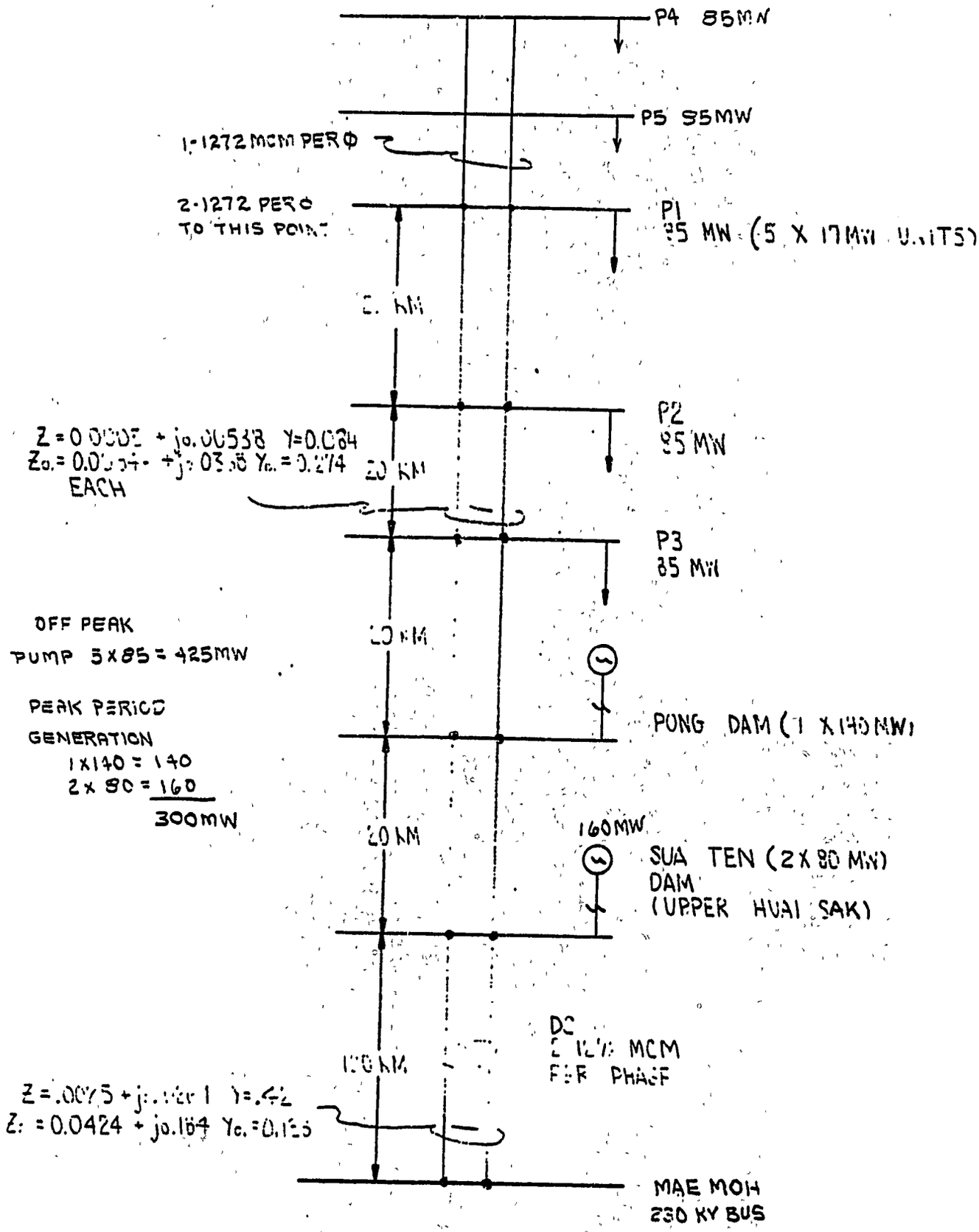

311

ING - YJM 1993

SK-1-3

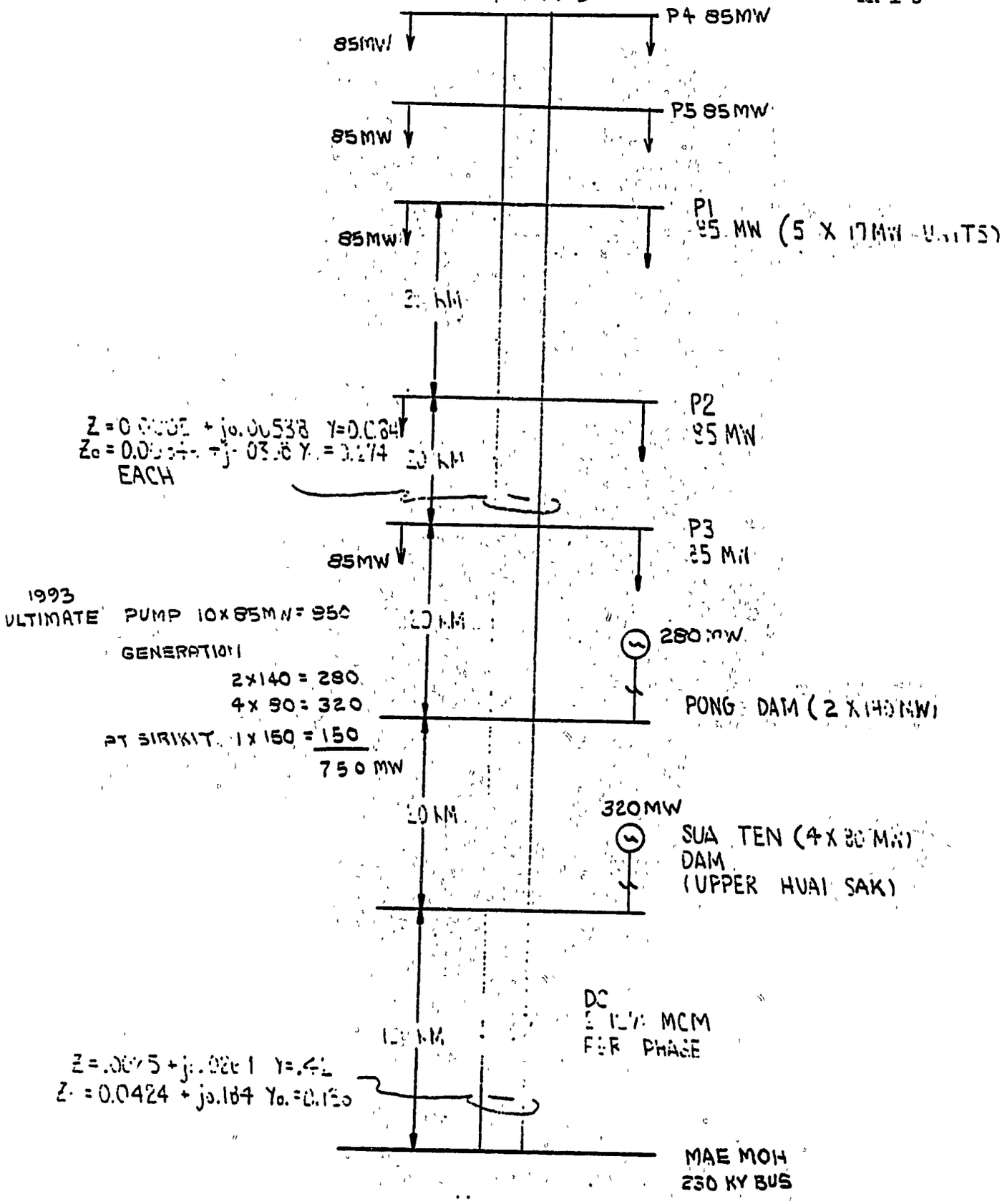

312

MAE MOH THERMAL 75 MW

GENERATOR DATA

Rated voltage	(KV)	13.8
Rated output	(MVA)	83.3
Ratad capacity	(MW)	75.0
Power factor		0.90
Rated speed	(RPM)	3000
Flywheel effect	$(WR)^2$	5.76 ton-m^2 Inertia Constant (H) 2.8424 per unit-sec.

REACTANCES AND RESISTANCES	SYMBOL	PERCENT	PER-UNIT (100 MVA BASE)
Negative sequence reactance, unsaturated.	X_2	13.5	0.1621
Zero sequence reactance	X_0	6.8	0.0816
Direct-axis synchronous reactance, unsaturated	X_d	163.0	1.9568
Direct-axis transient reactance, unsaturated	X'_d	16.0	0.1925
Direct-axis sub-transient reactance, unsaturated	X''_d	10.3	0.1236
Quadrature-axis synchronous reactance, unsaturated	X_q	163.0	1.9568
Quadrature-axis transient reactance, unsaturated	X'_q	18.8	0.2257
Quadrature-axis sub-transient reactance unsaturated	X''_q	12.1	0.1453

TIME CONSTANTS	SYMBOL	SECOND
Armature time constance	T_a	0.26
Direct-axis transient short-circuit time constant	T'_d	0.78
Direct-axis sub-transient shor-circuit time constant	T''_d	0.035
Direct-axis transient open-circuit time constant	T'_{do}	6.5
Direct-axis sub-transient open-circuit time constant	T''_{do}	0.022
Quadrature-axis sub-transient open-circuit time constant	T''_{qo}	0.022

313

MAE MOH THERMAL.150 MW

GENERATOR DATA

Rated voltage	(KV)	17.0
Rated output	(MVA)	175.0
Rated capacity	(MW)	150.0
Power factor		0.85
Rated speed	(RPM)	3000
Flywheel effect	$(WR)^2$	11.52 ton-m^2 Inertia Constant (H) 11.3696 per unit-sec. 100 MVA BASE

REACTANCES AND RESISTANCES	SYMBOL	PERCENT	PER-UNIT (100 MVA BASE)
Negative sequence reactance, unsaturated	X_2	16.5	0.0943
Zero sequence reactance	X_o	8.6	0.0491
Direct-axis synchronous reactance, unsaturated	X_d	175.0	1.0000
Direct-axis fransient reactance, unsaturated	X'_d	20.2	0.1154
Direct-axis sub-transient reactance, unsaturated	X''_d	13.3	0.0760
Quadrature-axis synchronous reactance, unsaturated	X_q	175.0	1.0000
Quaerature-axis transient reactance, unsaturated	X'_q	20.5	0.1171
Quadrature-axis sub-transient reactance unsaturated	X''_q	23.5	0.1343

TIME CONSTANTS	SYMBOL	SECOND
Armature time constance	T_a	0.26
Direct-axis transient short-circuit time constant	T'_d	0.78
Direct-axis sub-transient shor-circuit time constant	T''_d	0.022
Direct-axis transient open-circuit time constant	T'_{do}	6.5
Direct-axis sub-transient open-circuit time constant	T''_{do}	0.022
Quadrature-axis sub-transient open-circuit time Constant	T''_{qo}	0.022

MAE MOH THERMAL 300 MW

GENERATOR DATA

Rated voltage	(KV)	21.0
Rated output	(MVA)	350.0
Rated capacity	(MW)	300.0
Power factor		0.85
Rated speed	(RPM)	3000
Flywheel effect	$(WR)^2$	23.04 ton-m^2 Inertia Constant (H) 11.3696 per unit-sec.

REACTANCES AND RESISTANCES	SYMBOL	PERCENT	PER-UNIT (100 MVA BASE)
Negative sequence reactance, unsaturated	X_2	18.0	0.0514
Zero sequence reactance	X_o	11.3	0.0323
Direct-axis synchronous reactance, unsaturated	X_d	185.0	0.5429
Direct-axis transient reactance, unsaturated	X'_d	34.2	0.0977
Direct-axis sub-transient reactance, unsaturated	X''_d	22.3	0.0637
Quadrature-axis synchronous reactance, unsaturated	X_q	183.0	0.5229
Quadrature-axis transient reactance, unsaturated	X'_q	20.5	0.0586
Quadrature-axis sub-transient reactance unsaturated	X''_q	24.8	0.0709

TIME CONSTANTS	SYMBOL	SECOND
Armature time constance	T_a	0.26
Direct-axis transient short-circuit time constant	T'_d	0.78
Direct-axis sub-transient shor-circuit time constant	T''_d	0.022
Direct-axis transient open-circuit time constant	T'_{do}	6.5
Direct-axis sub-transient open-circuit time constant	T''_{do}	0.022
Quadrature-axis sub-transient open-circuit time Constant	T''_{qo}	0.022

315

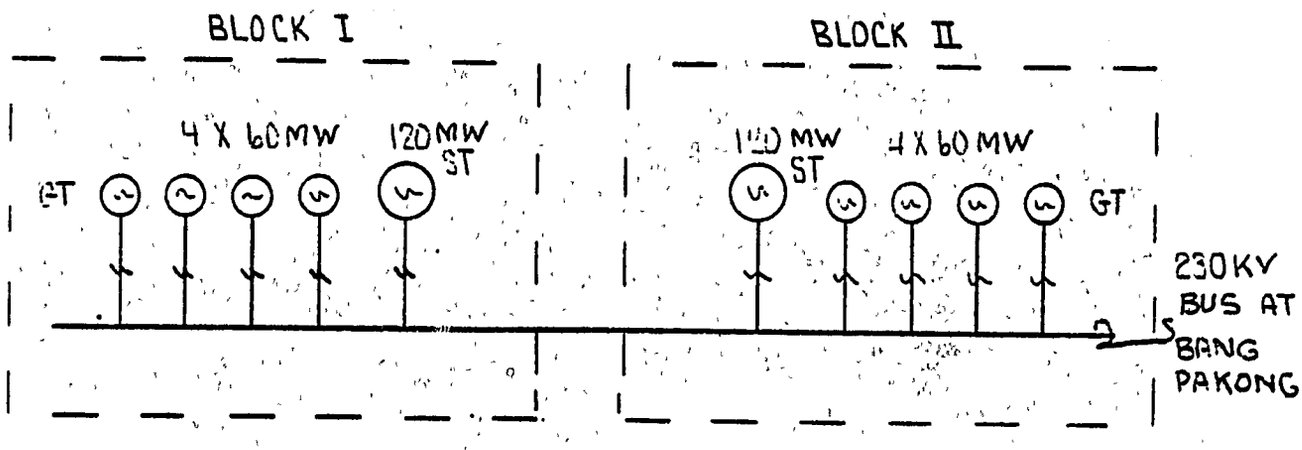

TOTAL - 720 MW

BANG PAKONG
COMBINED CYCLE

NOTE: UNITS ARE OPERATED IN BLOCKS OF 360 MW

316

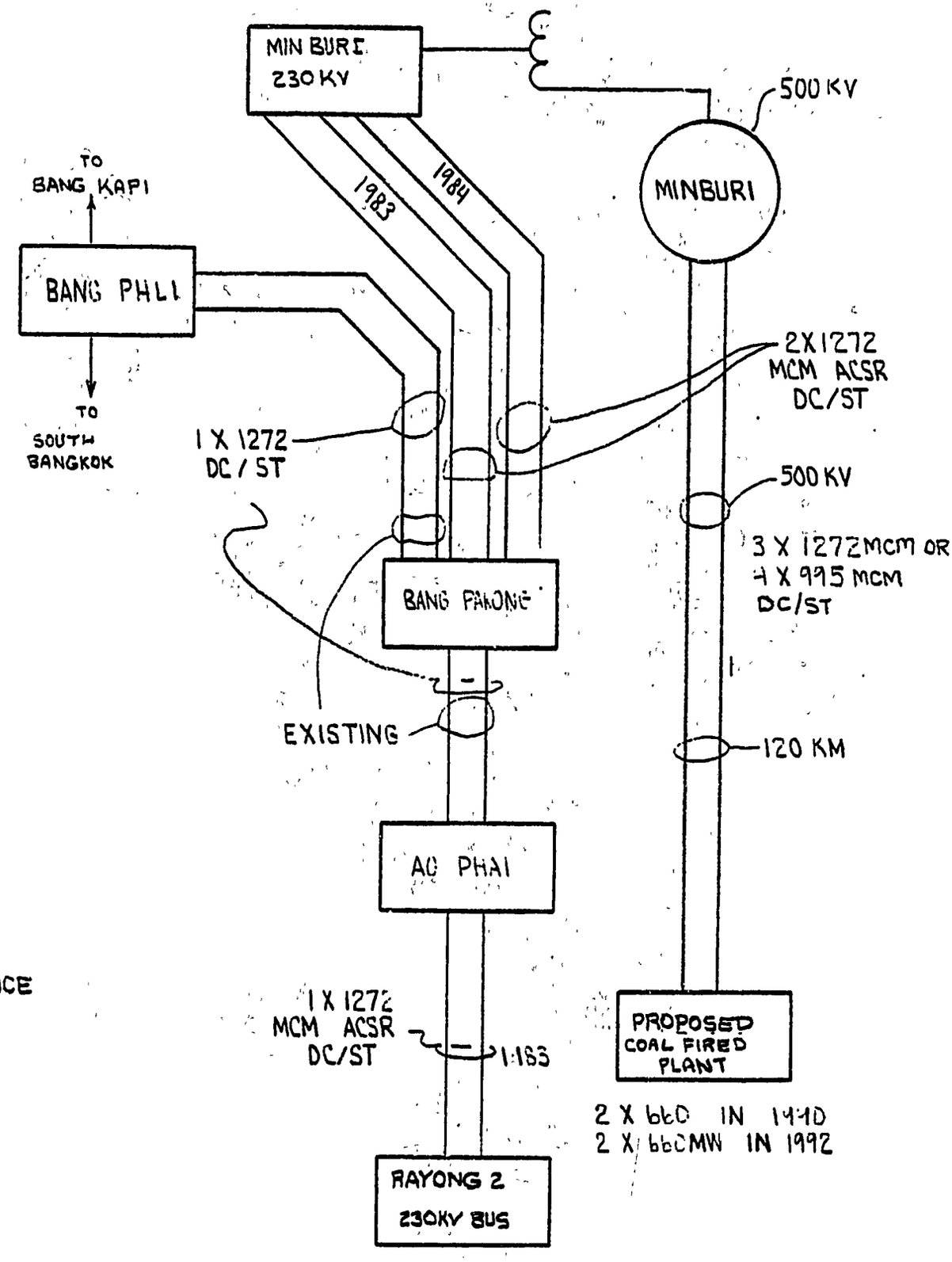

REFERENCE
FIG 6-4

317

MAE MOH TRANSFORMER
115/69KV 24/32/40 MVA

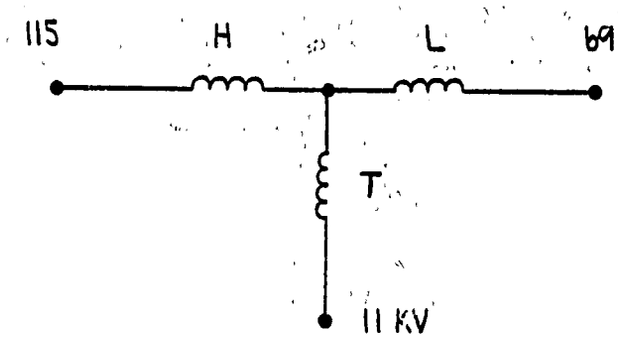

X H-L = 6.38 % ON 40 MVA
X H-T = 2.87 % ON 40 MVA
X L-T = 1.09 % ON 40 MVA

#4 TELEX
OF 25 JUNE

SK-6-1

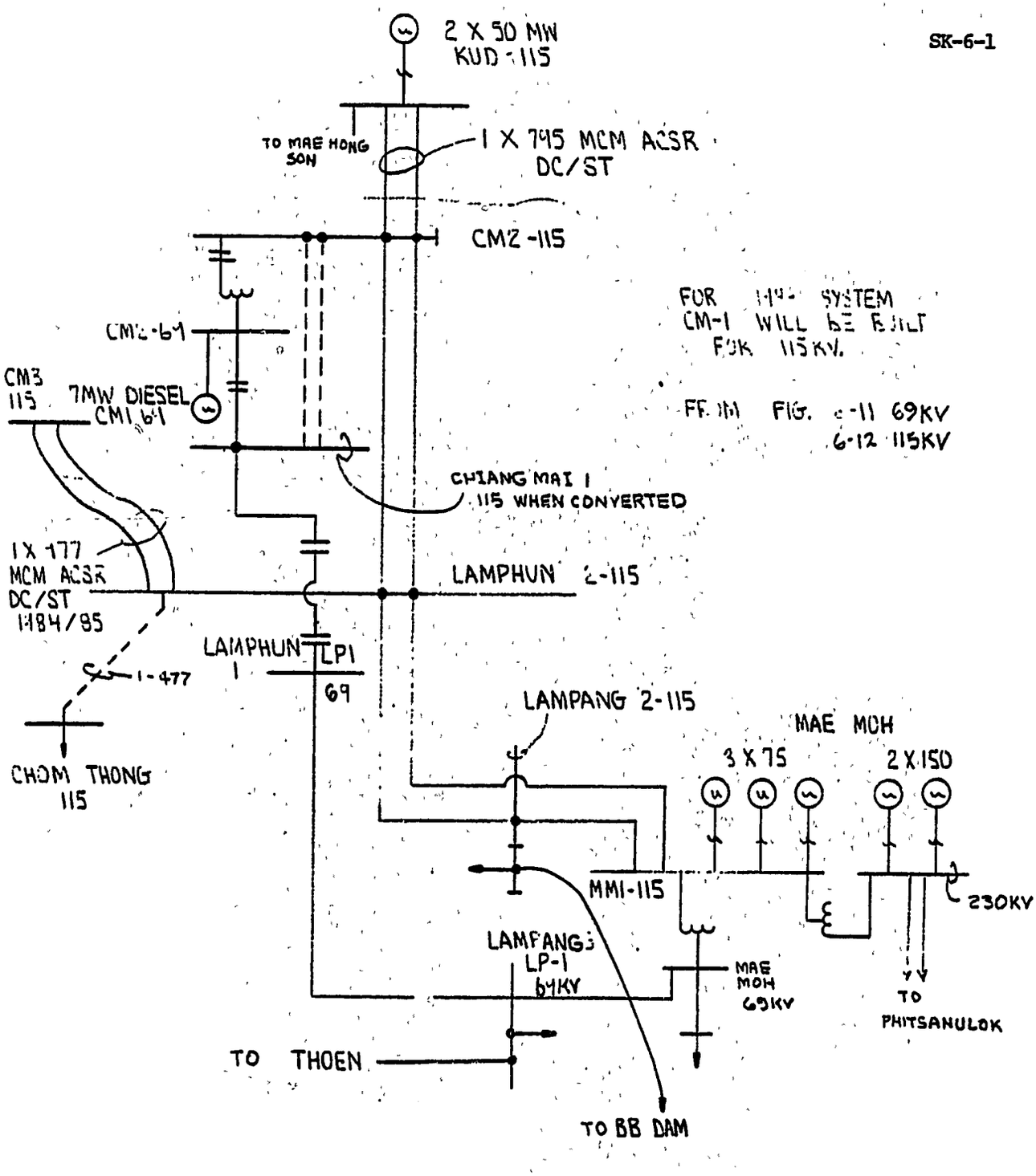

FOR 1994 SYSTEM
CM-1 WILL BE BUILT
FOR 115KV.

FROM FIG. 6-11 69KV
6-12 115KV

319

NAM NGUM DAM
(IN LAOS)

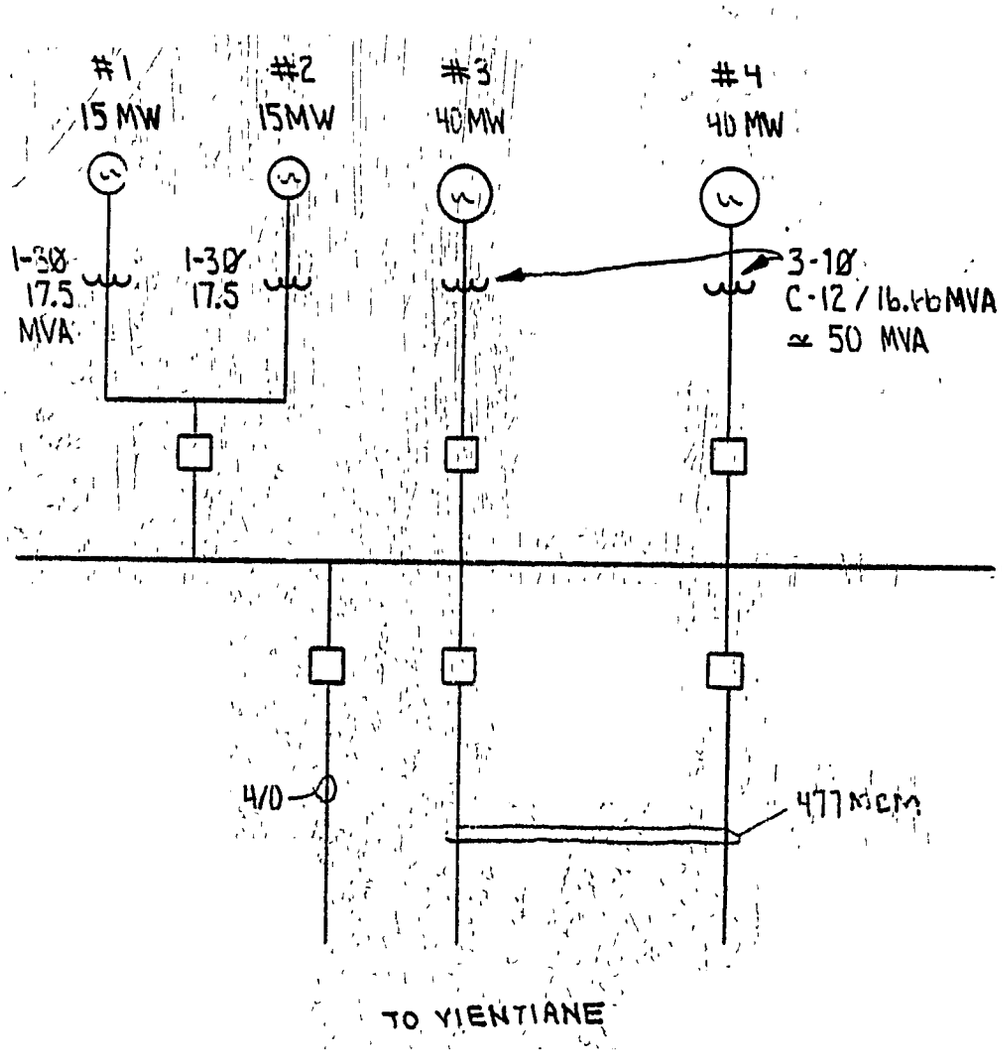

370

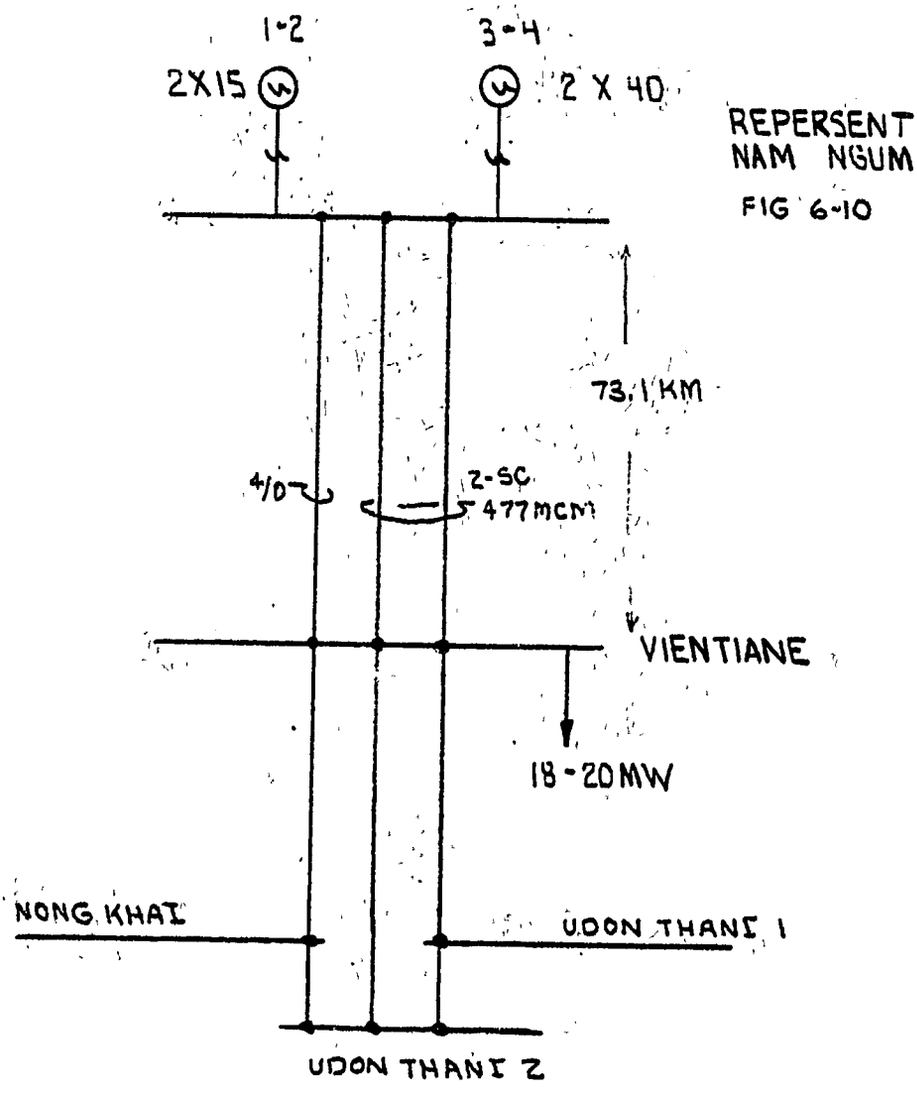
1-2
3-4
2X15
2 X 40
REPERSENT
NAM NGUM
FIG 6-10
73.1 KM
4/0
2-SC
477MCM
VIENTIANE
18-20MW
NONG KHAI
UDON THANI 1
UDON THANI 2

321

KUD DAM (2 X 50)

SK-8-1

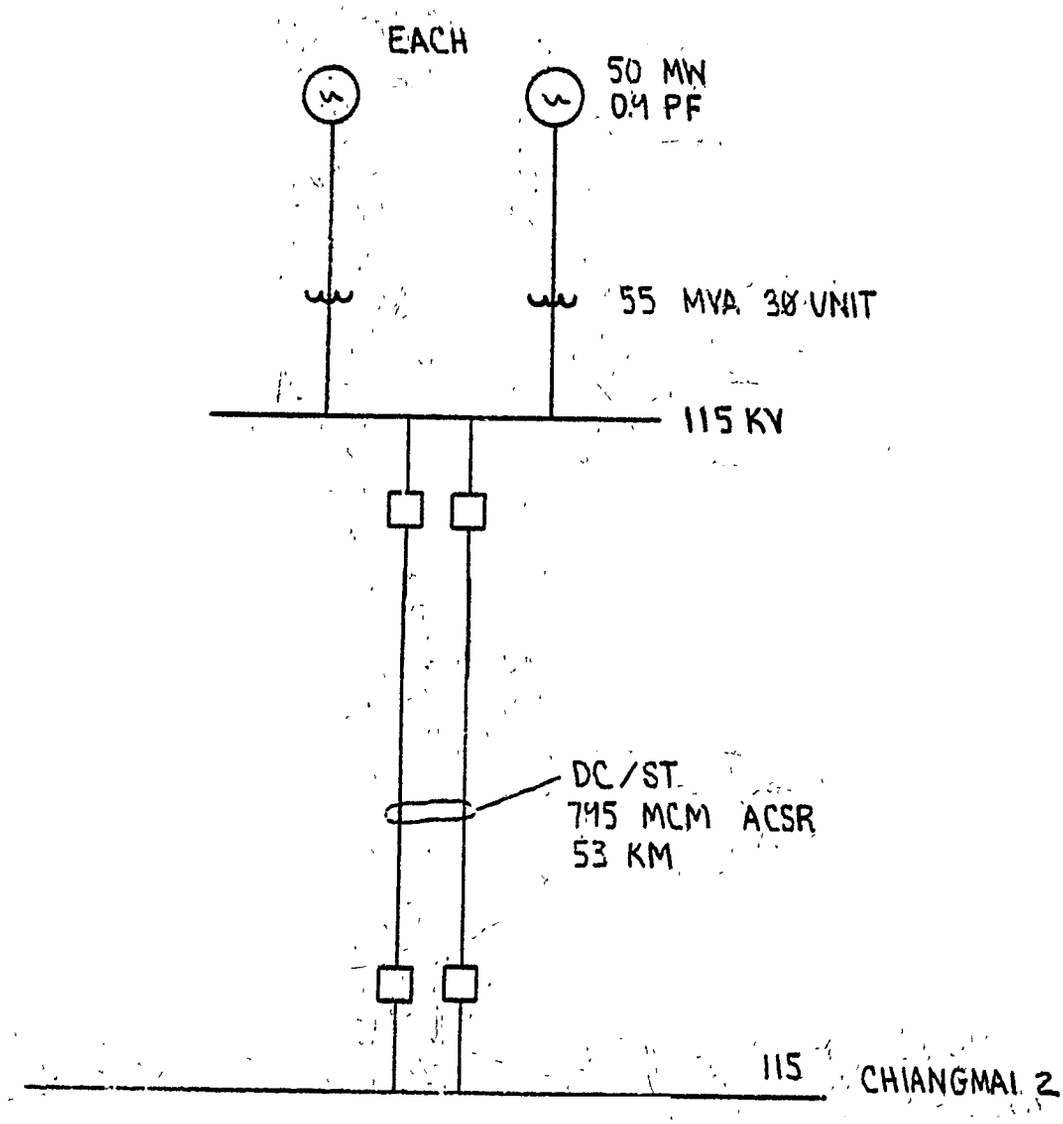

COMMISSIONING : 1988

322

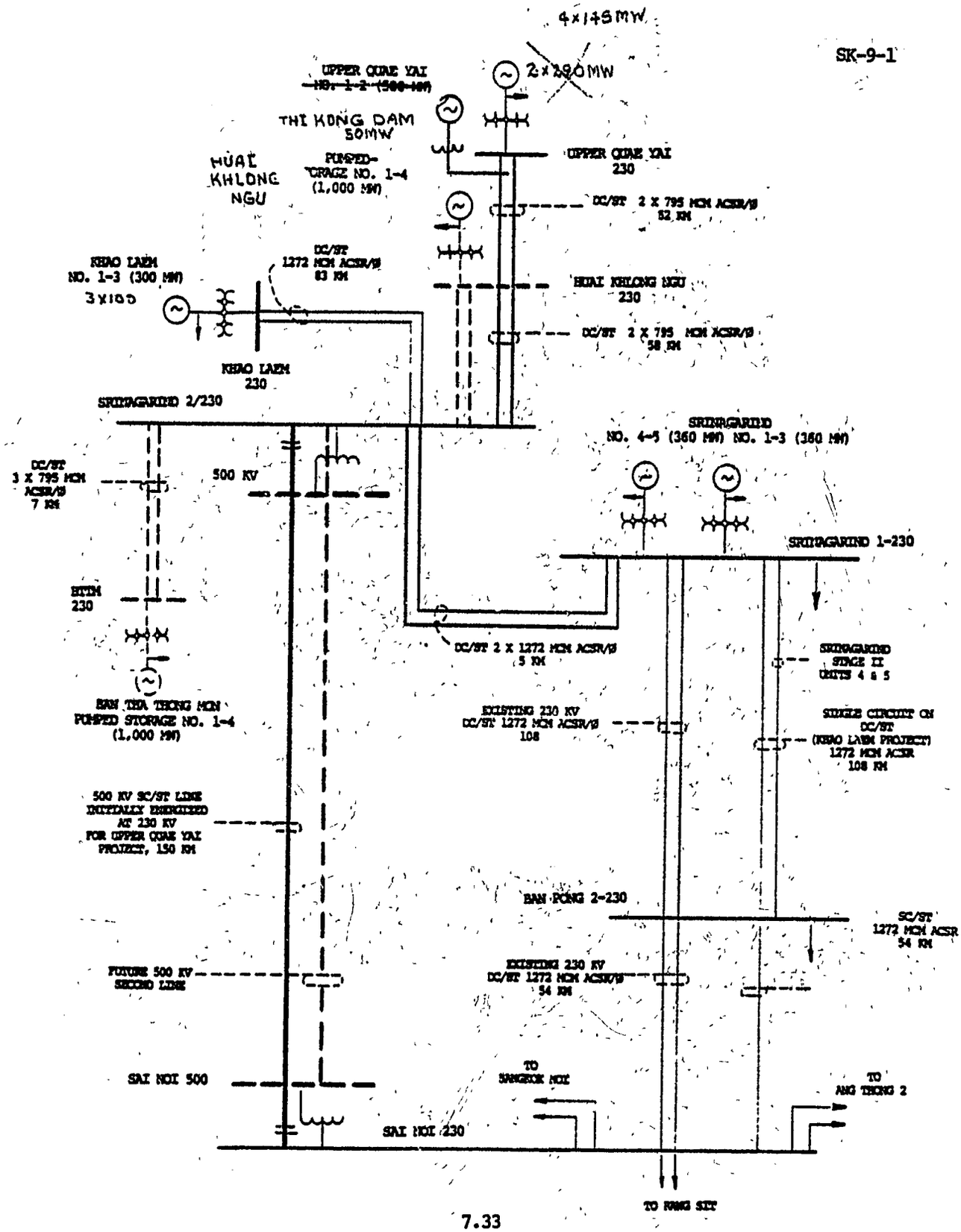
SK-9-1
4x145MW
2x290MW
UPPER QUAE YAI
THI KONG DAM
50MW
HUAI KHLONG NGU
PUMPED-STORAGE NO. 1-4 (1,000 MW)
UPPER QUAE YAI 230
DC/ST 2 X 795 MCM ACSR/Ø 52 KM
KHAO LAEM NO. 1-3 (300 MW)
3x100
DC/ST 1272 MCM ACSR/Ø 83 KM
HUAI KHLONG NGU 230
DC/ST 2 X 795 MCM ACSR/Ø 58 KM
KHAO LAEM 230
SRINGARIND 2/230
SRINGARIND NO. 4-5 (360 MW) NO. 1-3 (360 MW)
DC/ST 3 X 795 MCM ACSR/Ø 7 KM
500 KV
SRINGARIND 1-230
BTIM 230
DC/ST 2 X 1272 MCM ACSR/Ø 5 KM
SRINGARIND STAGE II UNITS 4 & 5
BAN THA THONG MCN PUMPED STORAGE NO. 1-4 (1,000 MW)
EXISTING 230 KV DC/ST 1272 MCM ACSR/Ø 108
SINGLE CIRCUIT ON DC/ST (KHAO LAEM PROJECT) 1272 MCM ACSR 108 KM
500 KV SC/ST LINE INITIALLY ENERGIZED AT 230 KV FOR UPPER QUAE YAI PROJECT, 150 KM
BAN PONG 2-230
SC/ST 1272 MCM ACSR 54 KM
FUTURE 500 KV SECOND LINE
EXISTING 230 KV DC/ST 1272 MCM ACSR/Ø 54 KM
SAI NOI 500
TO BANGKOK NOI
TO ANG THONG 2
SAI NOI 230
TO RANG SIT

323

SK-9-2

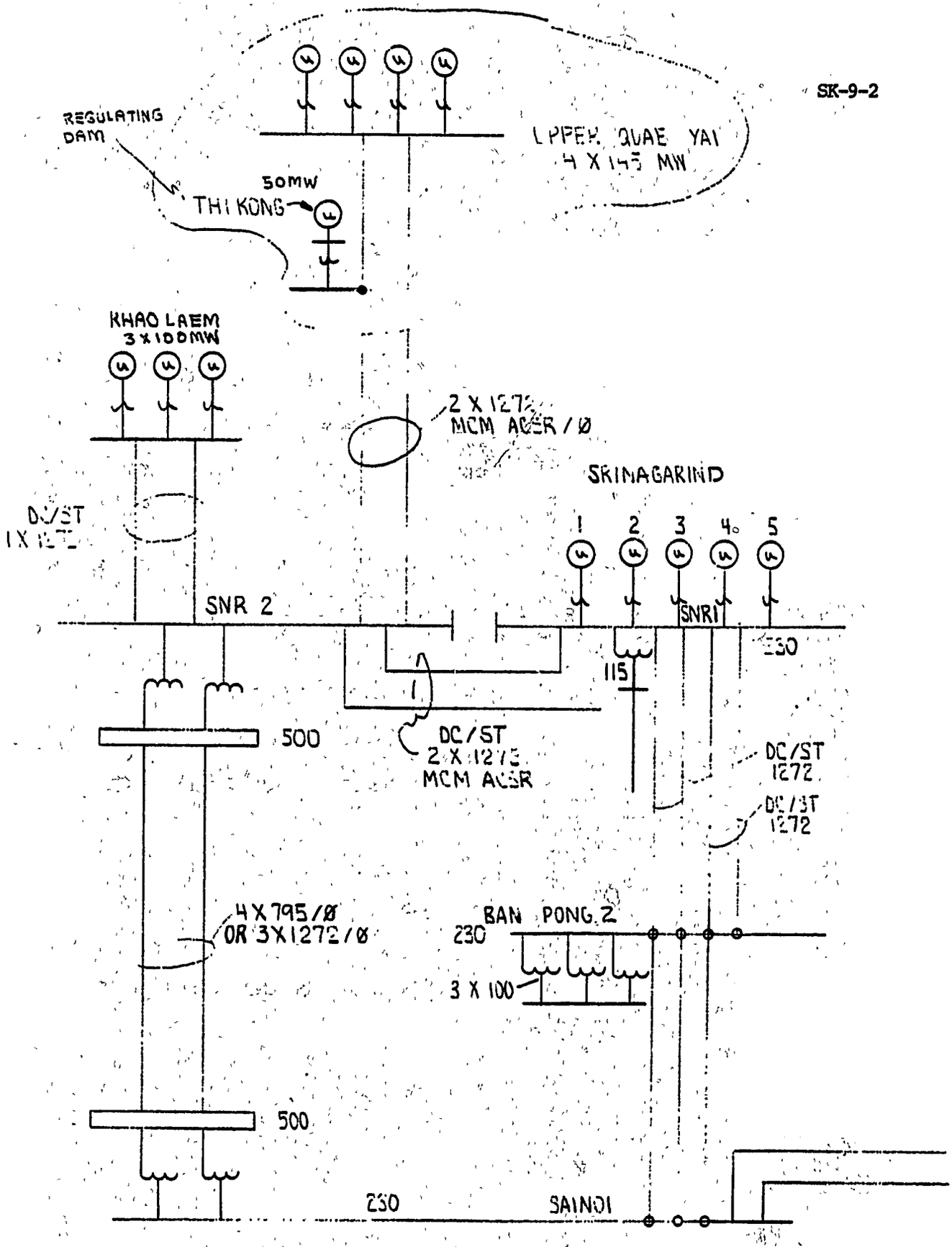
REGULATING DAM
50MW
THI KONG
KHAO LAEM
3 X 100MW
2 X 1272 MCM ACSR / Ø
SRINAGARIND
1
2
3
4
5
SNR 2
SNR1
230
115
500
DC/ST
2 X 1272
MCM ACSR
DC/ST
1272
DC/ST
1272
4 X 795 / Ø
OR 3 X 1272 / Ø
BAN PONG 2
230
3 X 100
500
230
SAINOI

324

MISC. HYDRO

JUNE 27
TMC #6

SK-10-1

		MW	
1. KUD	(2 X 50MW)	100	
2. LOEI TRANSBASIN	NAM SAN	2 X 21	126
	NAM MAN	2 X 13	
	NAM LOEI	1 X 18	
	UPPER PA SAK	2 X 12	
3. PAK MUN PROJECT		3 X 36 = 108	
		TOTAL = 334	

325

MAE MOH-BANGKOK EHV TRANSMISSION SYSTEM

DATA FROM SYSTEM OPERATION DEPARTMENT

FOR

MR. GORDON HOLMES, AND MR. DAVID TZOU

OF

LEMCO ENGINEERS, INC

		Page
1.	- Average Actual Generating Capability of Thermal Power Plants F.Y. 1975-1978	1
2.	- Average Actual Generating Capability Excluding Shut-Down Time of Thermal Power Plants F.Y. 1975-1978	2
3.	- Yearly Plant Factor of Thermal Power Plants F.Y. 1975-1978	3
4.	- Outage-Rate of Thermal Power Plants F.Y. 1975	4
5.	- Outage-Rate of Thermal Power Plants F.Y. 1976	5
6.	- Outage-Rate of Thermal Power Plants F.Y. 1977	6
7.	- Outage-Rate of Thermal Power Plants F.Y. 1978	7
8.	- Outage-Rate of Thermal Power Plants F.Y. 1979	8
9.	- Average Actual Generating Capability of Hydro Plants-Region 1 F.Y. 1975-1978	9
10.	- Average Actual Generating Capability of Hydro Plants-Region 2 F.Y. 1975-1978	10
11.	- Yearly Plant Factor of Hydro Power Plants F.Y. 1975-1978	11
12.	- Comparison of Running Hour and Shut-Down Time of Hydro Plants F.Y. 1976	12
13.	- Comparison of Running Hour and Shut-Down Time of Hydro Plants F.Y. 1977	13

326

Page

14. - Comparison of Running Hour and Shut-Down Time of Hydro Plants F.Y. 1978 14

15. - Existing Load Duration Curve of EGAT 15

16. - Existing Load Duration Curve of EGAT $R_1 + R_2 + R_4$ 16

17. Operation of Tap Setting of Substation Transformers of All EGAT's System F.Y. 1980 17

18. - Operation of Tap Setting of Generator Transformers of All EGAT's System F.Y. 1980 19

19. - VAR Support of All EGAT's System F.Y. 1980 20

- Shunt Reactor 20
- Capacitor Bank 20
- Synchronous Condensor 22

Power Economic And System Operation Planning Division

System Operation Department - EGAT

July 10, 1980

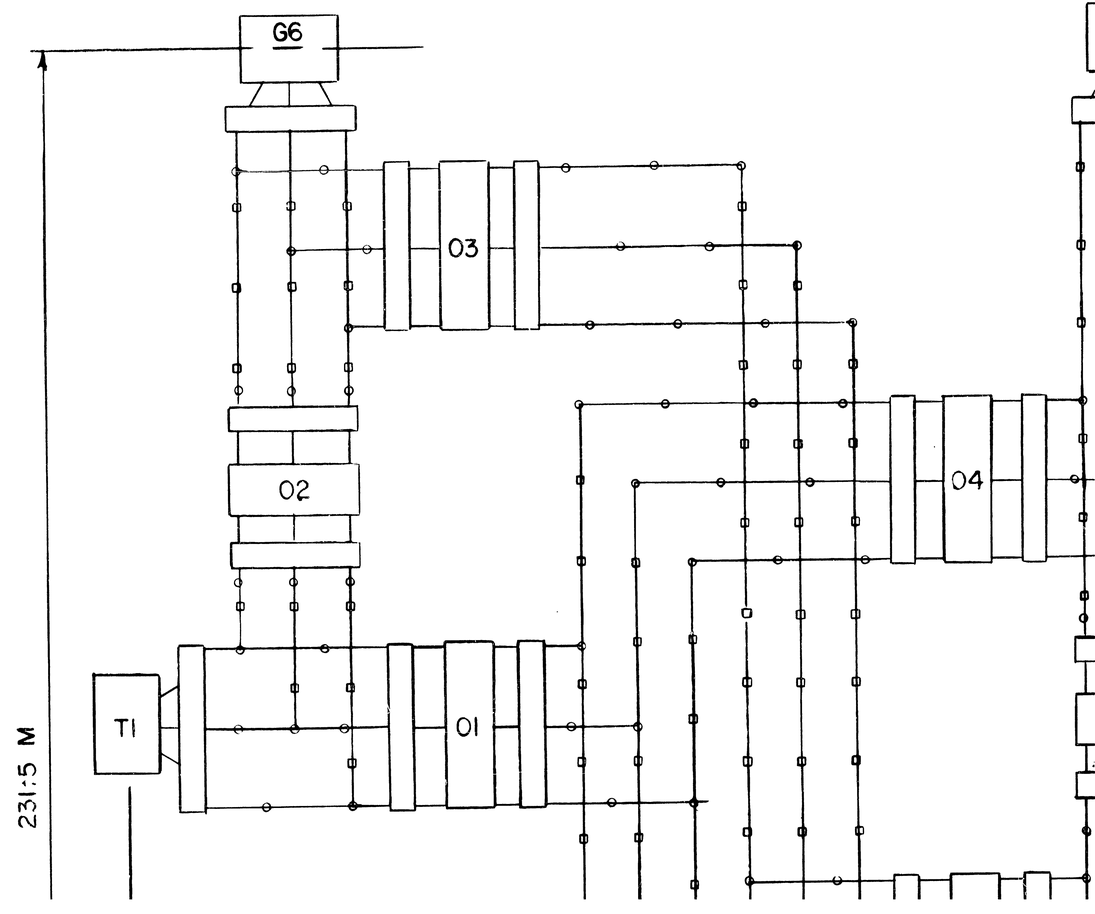
G6
03
02
04
T1
01
231·5 M

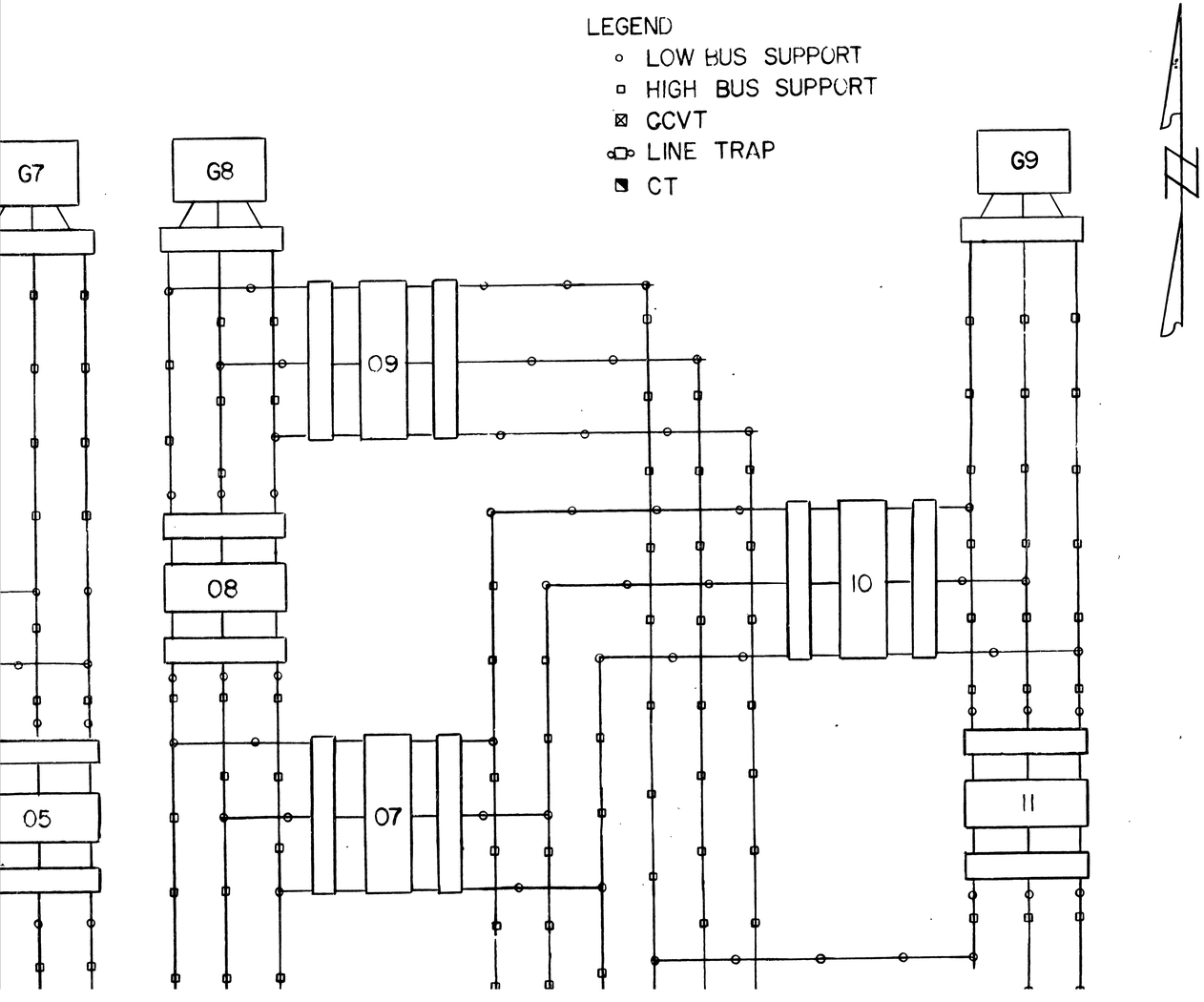
LEGEND
LOW BUS SUPPORT
HIGH BUS SUPPORT
CCVT
LINE TRAP
CT
G7
G8
G9
05
07
08
09
10
11

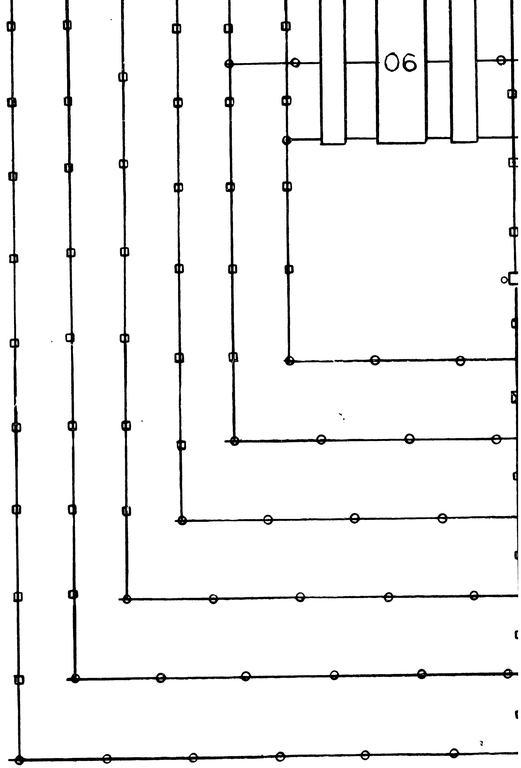

L2

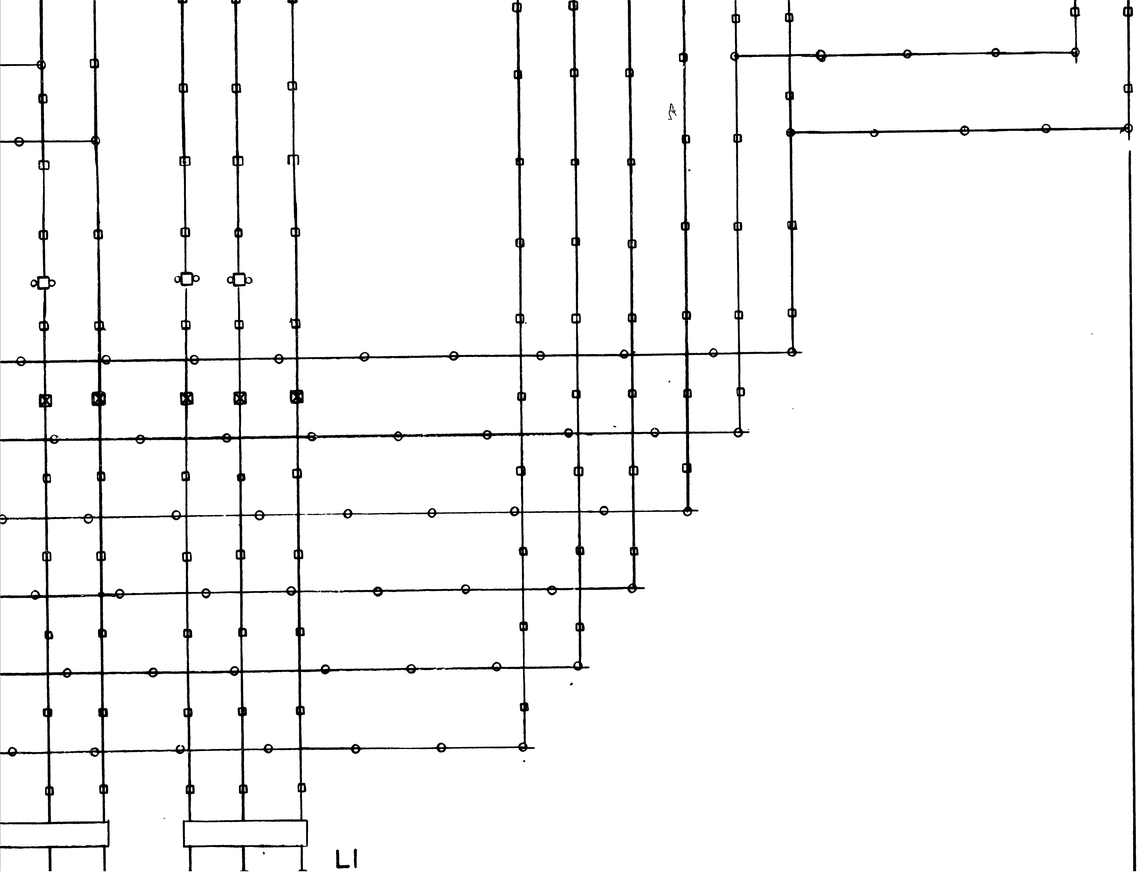
L1

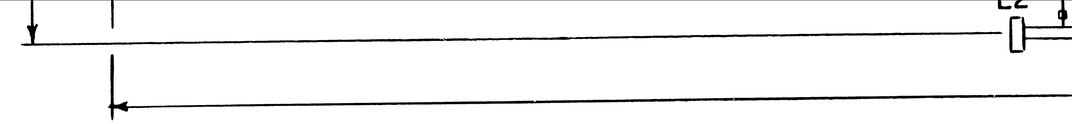

REV	DATE	DESCRIPTION OF REVISION	BY	APPD.	REV	DATE	DESCRIPTION OF REVISION	BY	APPD.	REV	DATE	DESCRIPTION OF REVISION	BY	APPD.

DESIGNED KR Swan
DRAWN JL.B.
CHECKED
APPROVED
APPROVED
DATE

PR
TH
SU

STAT
PROF.
SEAL

NOTE: SUBSTATION CONFIGURATION SHOWN IS FOR THE YEAR 1988.

PNAA 0007

5 of 10

EPARED UNDER
E RESPONSIBLE
PERVISION OF

E OF
REG. NO.
AFFIXED / /

LEMCO ENGINEERS (INTERNATIONAL), INC.
ST. LOUIS, MISSOURI

MAE MOH
PRELIMINARY 500 KV
BUS LAYOUT

DWG NO.	SCALE	REV.
	1"=60'-0"	0

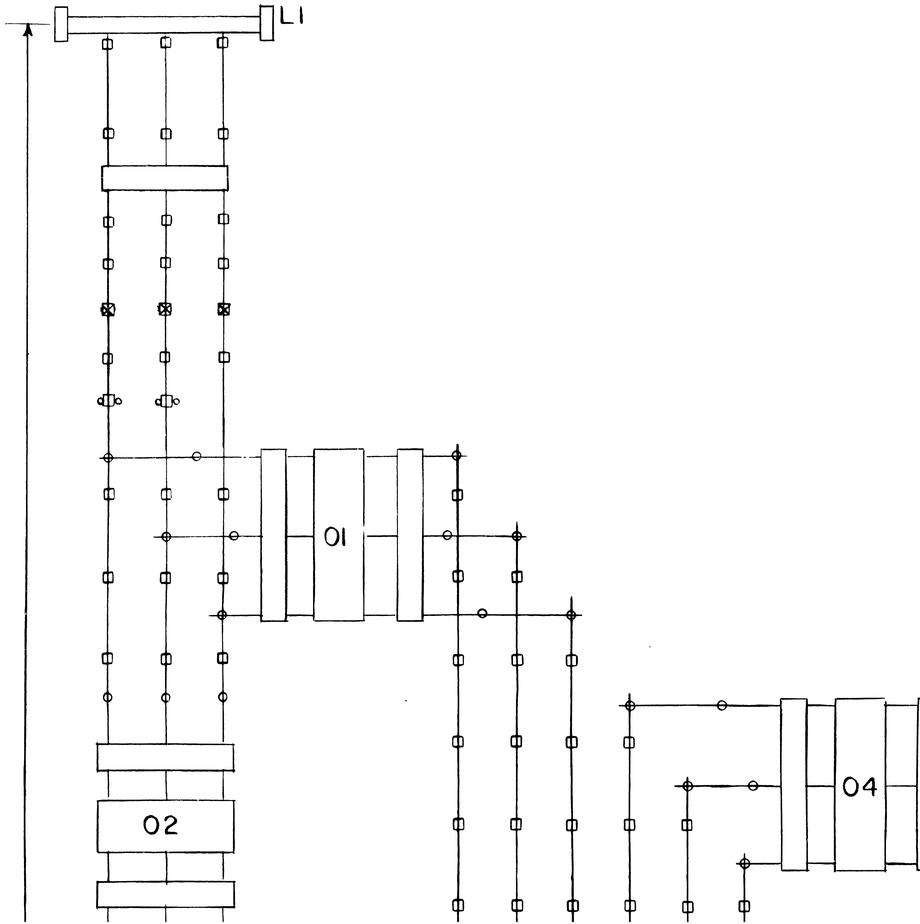
L1
01
02
04

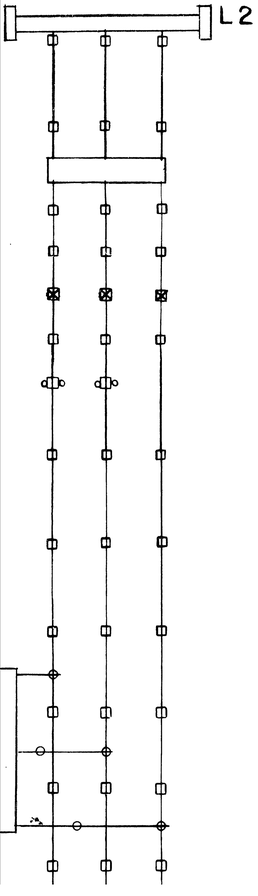

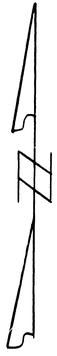

LEGEND

- ○ LOW BUS SUPPORT
- ▫ HIGH BUS SUPPORT
- ⊠ CCVT
- LINE TRAP
- ◪ CT

263.3 M
03
06

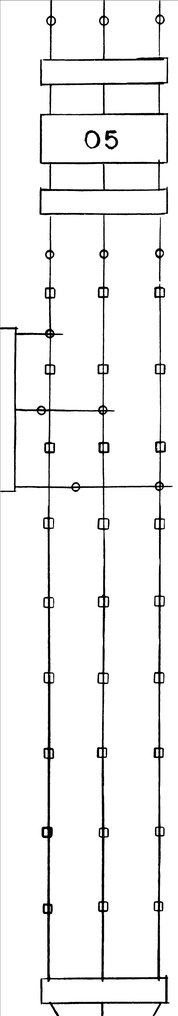
05

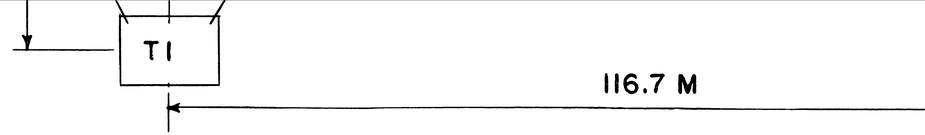

REV	DATE	DESCRIPTION OF REVISION	BY	APPD.	REV	DATE	DESCRIPTION OF REVISION	BY	APPD.	REV	DATE	DESCRIPTION OF REVISION	BY	APPD.

DESIGNED KR/Jwan
DRAWN Gja
CHECKED
APPROVED
APPROVED
DATE

T 2

NOTE: SUBSTATION CONFIGURATION SHOWN IS FOR THE YEAR 1988.

PNAQ007
6 of 10

PREPARED UNDER THE RESPONSIBLE SUPERVISION OF

STATE OF
PROF. REG. NO.
SEAL AFFIXED / /

Consultants
LEMCO ENGINEERS (INTERNATIONAL), INC.
ST. LOUIS, MISSOURI

MIN BURI
PRELIMINARY 500 KV
BUS LAYOUT

DWG NO.	SCALE	REV.
	1" = 60'-0"	0

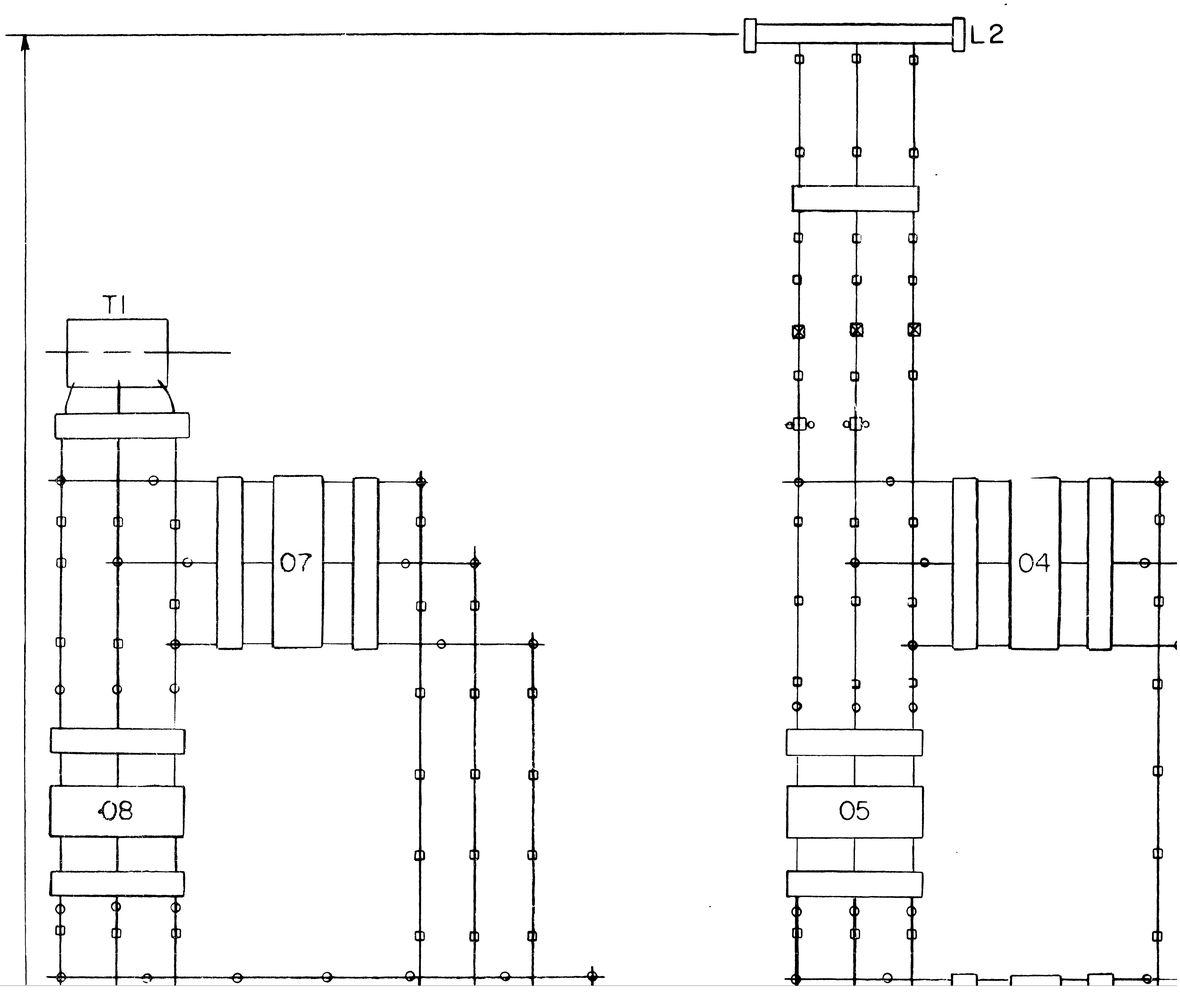
L2
T1
07
04
08
05

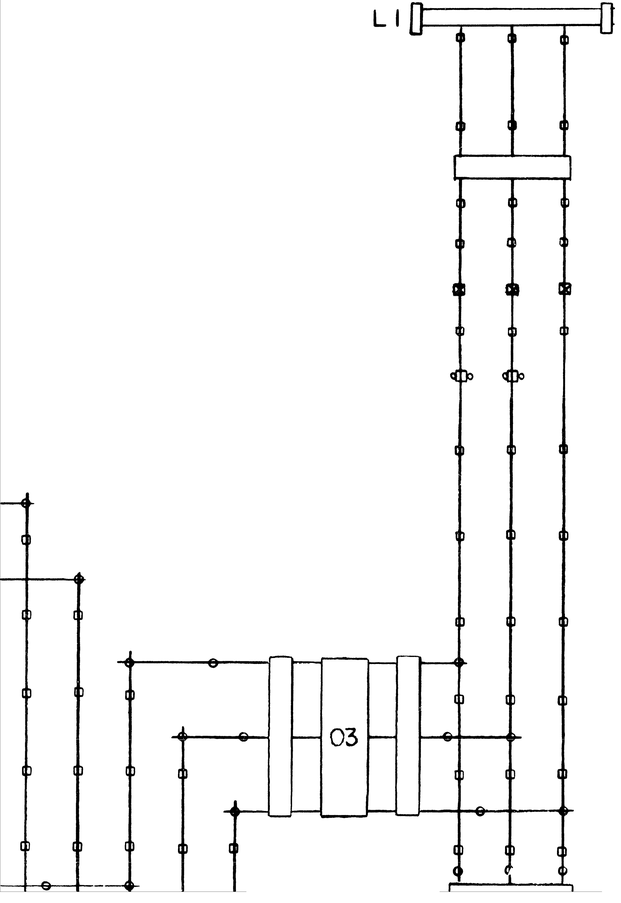

LEGEND

- ○ LOW BUS SUPPORT
- □ HIGH BUS SUPPORT
- ⊠ CCVT
- LINE TRAP
- ◪ CT

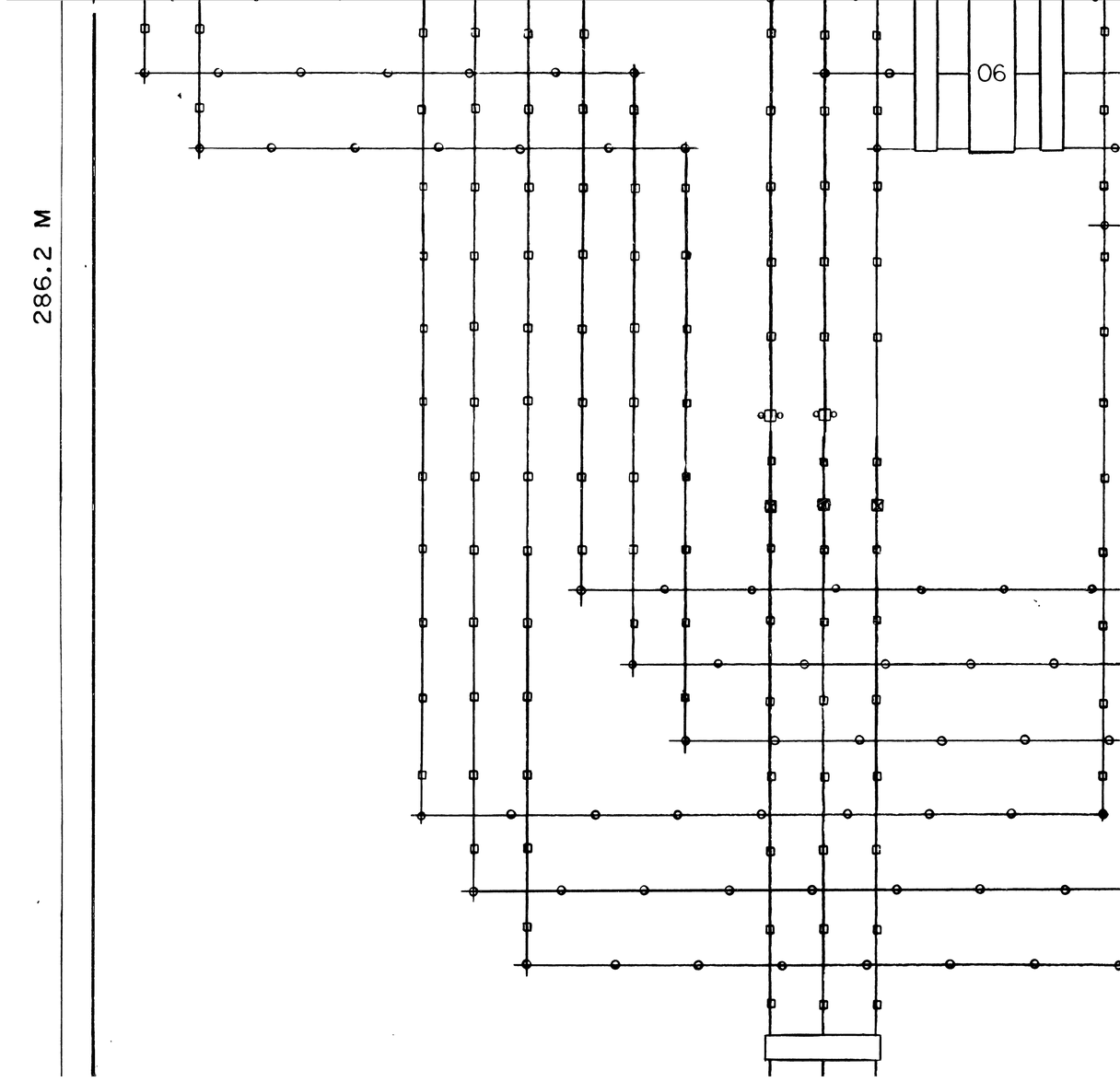
286.2 M
06

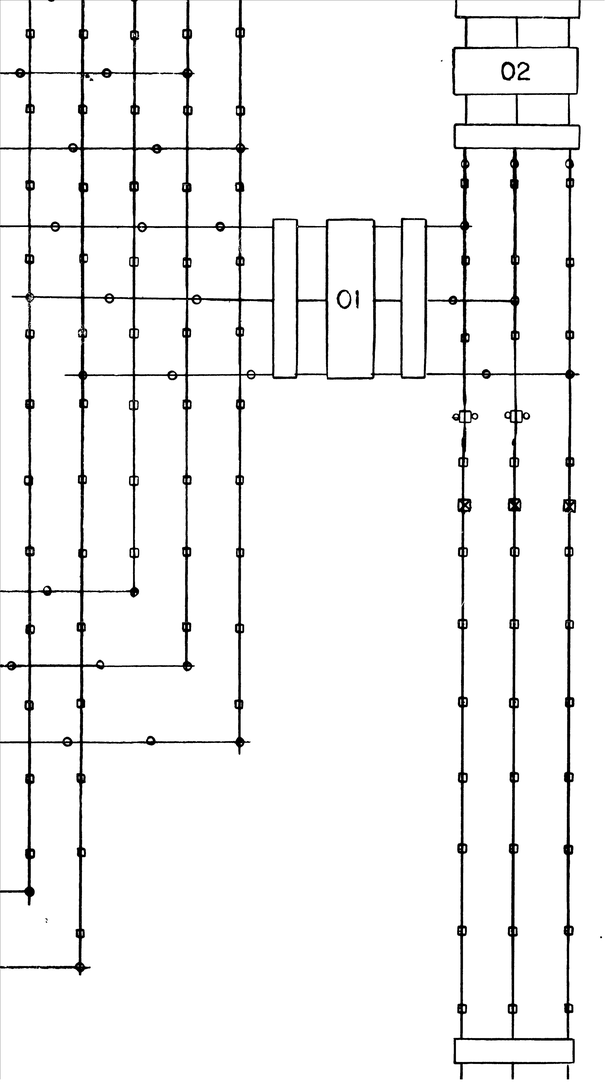
02
01

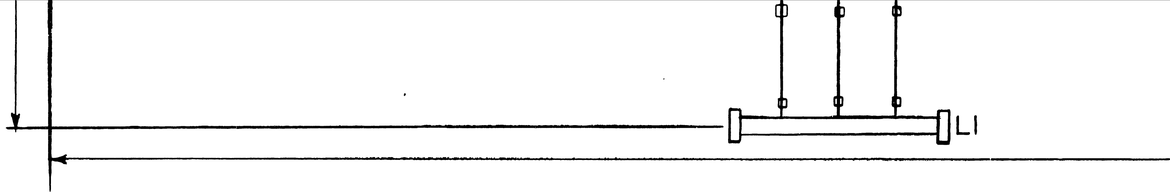

REV	DATE	DESCRIPTION OF REVISION	BY	APPD.	REV	DATE	DESCRIPTION OF REVISION	BY	APPD.	REV	DATE	DESCRIPTION OF REVISION	BY	APPD.

DESIGNED KR/JWCh
DRAWN SLK
CHECKED
APPROVED
APPROVED
DATE

N67228

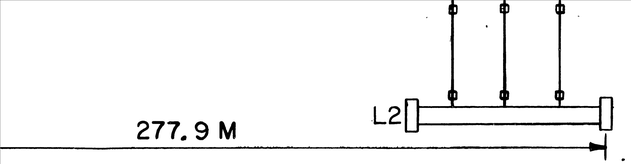

NOTE: SUBSTATION CONFIGURATION SHOWN IS FOR THE YEAR 1988.

PNAHQ 007

7 of 10

PREPARED UNDER THE RESPONSIBLE SUPERVISION OF

_____

STATE OF _____

PROF. REG. NO. _____

SEAL AFFIXED / /

Consultants

LEMCO ENGINEERS (INTERNATIONAL), INC.

ST. LOUIS, MISSOURI

CHUM SAENG
PRELIMINARY 500 KV
BUS LAYOUT

DWG NO.	SCALE	REV.
	1" = 60'-0"	0

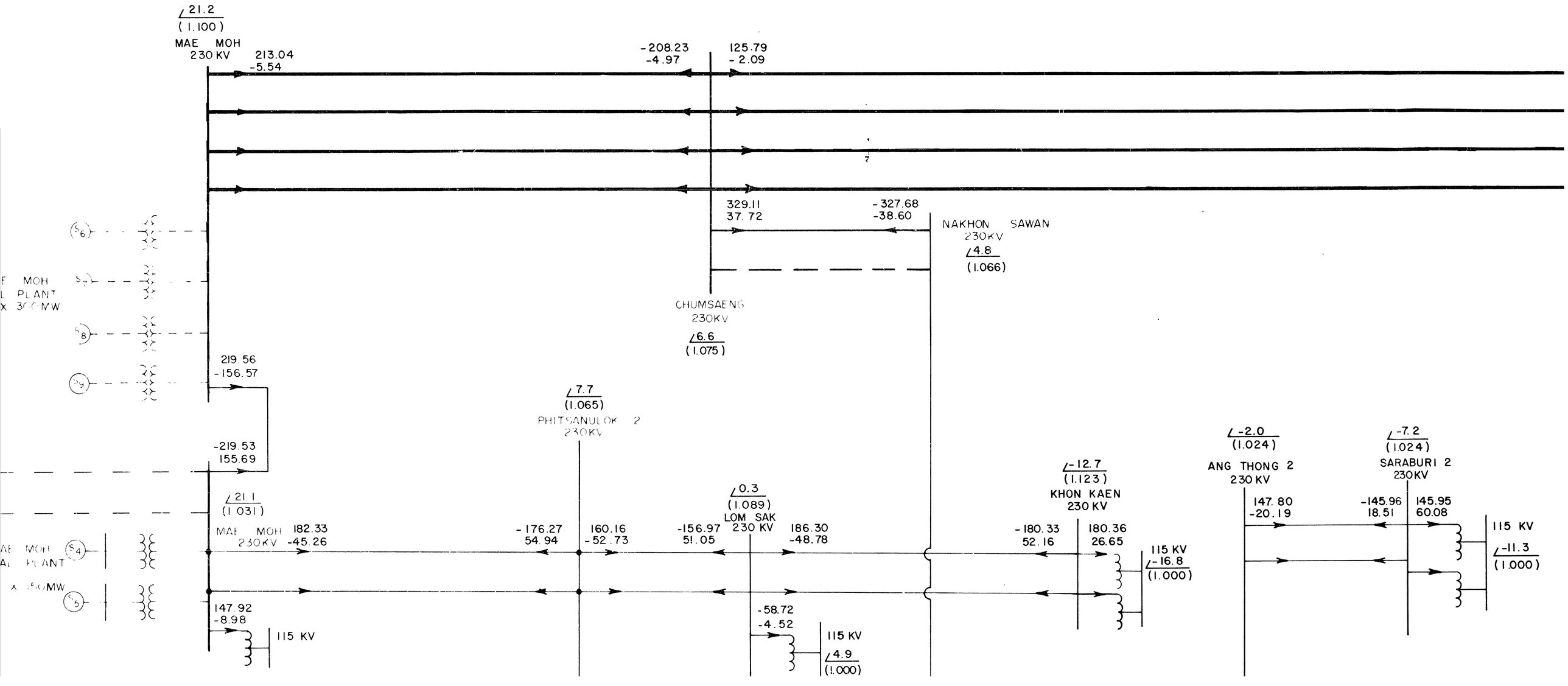
21.2
(1.100)
MAE MOH
230 KV
213.04
-5.54
-208.23
-4.97
125.79
-2.09
329.11
37.72
-327.68
-38.60
NAKHON SAWAN
230KV
4.8
(1.066)
CHUMSAENG
230KV
6.6
(1.075)
S6
S7
S8
S9
219.56
-156.57
7.7
(1.065)
PHITSANULOK 2
230KV
-219.53
155.69
21.1
(1.031)
MAE MOH
230KV
182.33
-45.26
-176.27
54.94
160.16
-52.73
-156.97
51.05
0.3
(1.089)
LOM SAK
230 KV
186.30
-48.78
-180.33
52.16
180.36
26.65
-12.7
(1.123)
KHON KAEN
230 KV
115 KV
-16.8
(1.000)
-2.0
(1.024)
ANG THONG 2
230 KV
147.80
-20.19
-145.96
18.51
145.95
60.08
-7.2
(1.024)
SARABURI 2
230KV
115 KV
-11.3
(1.000)
S4
S5
147.92
-8.98
115 KV
-58.72
-4.52
115 KV
4.9
(1.000)

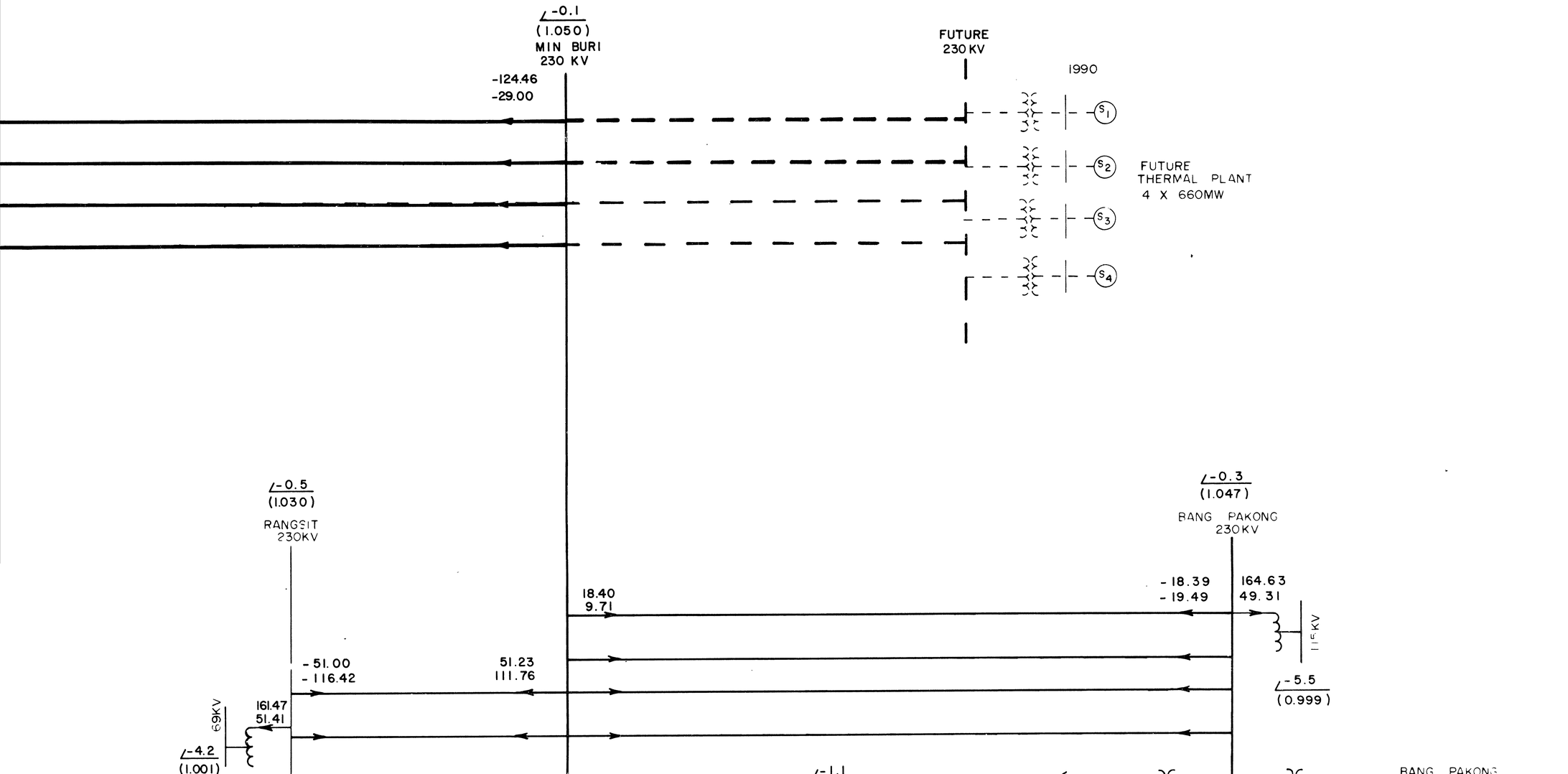
∠-0.1
(1.050)
MIN BURI
230 KV
-124.46
-29.00
FUTURE
230 KV
1990
S1
S2
S3
S4
FUTURE
THERMAL PLANT
4 X 660MW
∠-0.5
(1.030)
RANGSIT
230KV
∠-0.3
(1.047)
BANG PAKONG
230KV
18.40
9.71
- 18.39
- 19.49
164.63
49.31
115KV
- 51.00
- 116.42
51.23
111.76
∠-5.5
(0.999)
161.47
51.41
69KV
∠-4.2
(1.001)
∠-1.1
BANG PAKONG

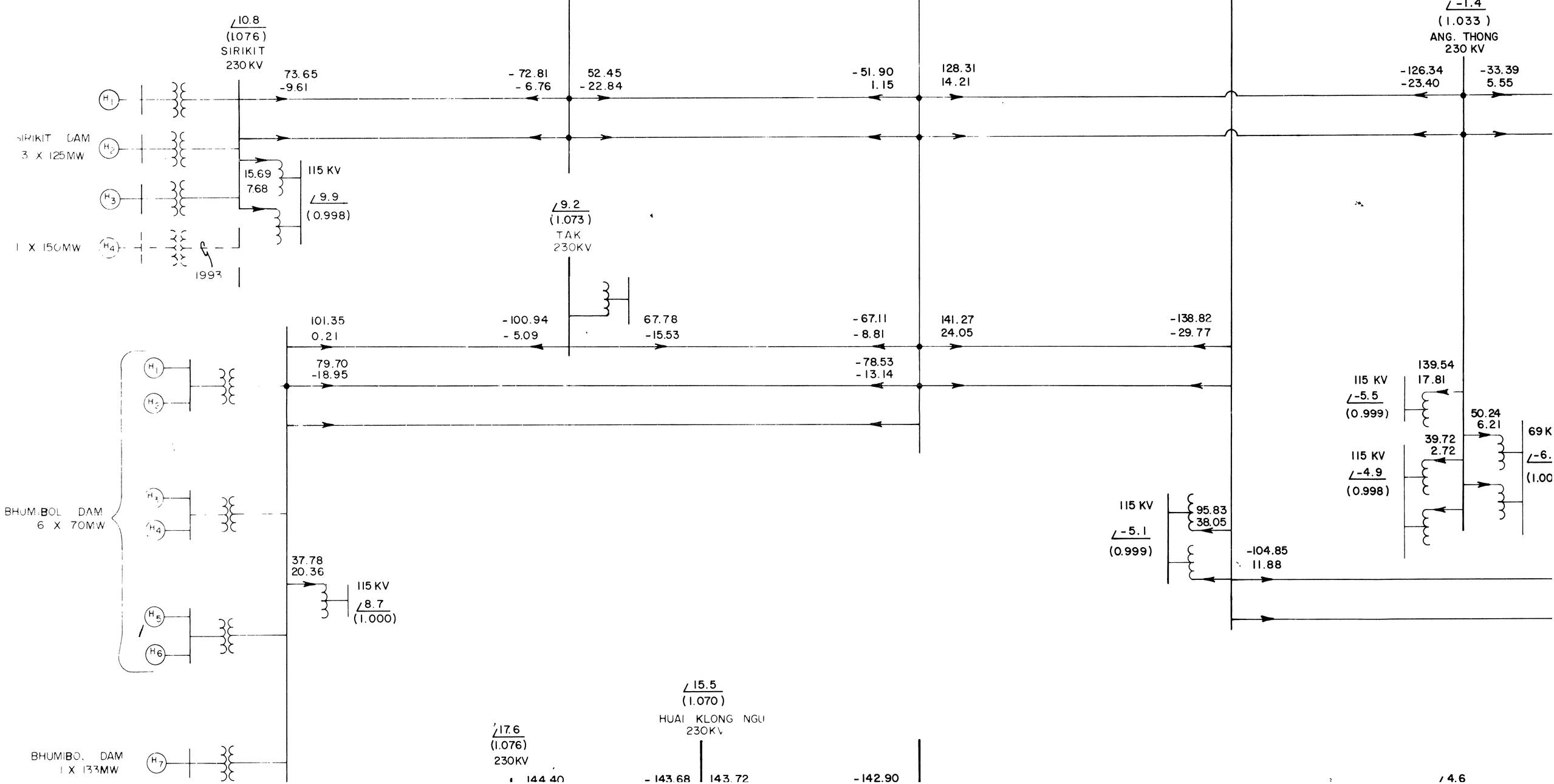
10.8
(1.076)
SIRIKIT
230KV
73.65
-9.61
-72.81
-6.76
52.45
-22.84
-51.90
1.15
128.31
14.21
-1.4
(1.033)
ANG. THONG
230 KV
-126.34
-23.40
-33.39
5.55
SIRIKIT DAM
3 X 125MW
15.69
7.68
115 KV
9.9
(0.998)
1 X 150MW
1993
9.2
(1.073)
TAK
230KV
101.35
0.21
-100.94
-5.09
67.78
-15.53
-67.11
-8.81
141.27
24.05
-138.82
-29.77
79.70
-18.95
-78.53
-13.14
139.54
17.81
115 KV
-5.5
(0.999)
50.24
6.21
69 K
39.72
2.72
115 KV
-4.9
(0.998)
BHUMIBOL DAM
6 X 70MW
115 KV
95.83
38.05
-5.1
(0.999)
-104.85
11.88
37.78
20.36
115 KV
8.7
(1.000)
15.5
(1.070)
HUAI KLONG NGU
230KV
17.6
(1.076)
230KV
BHUMIBOL DAM
1 X 133MW
144.40
-143.68
143.72
-142.90
4.6

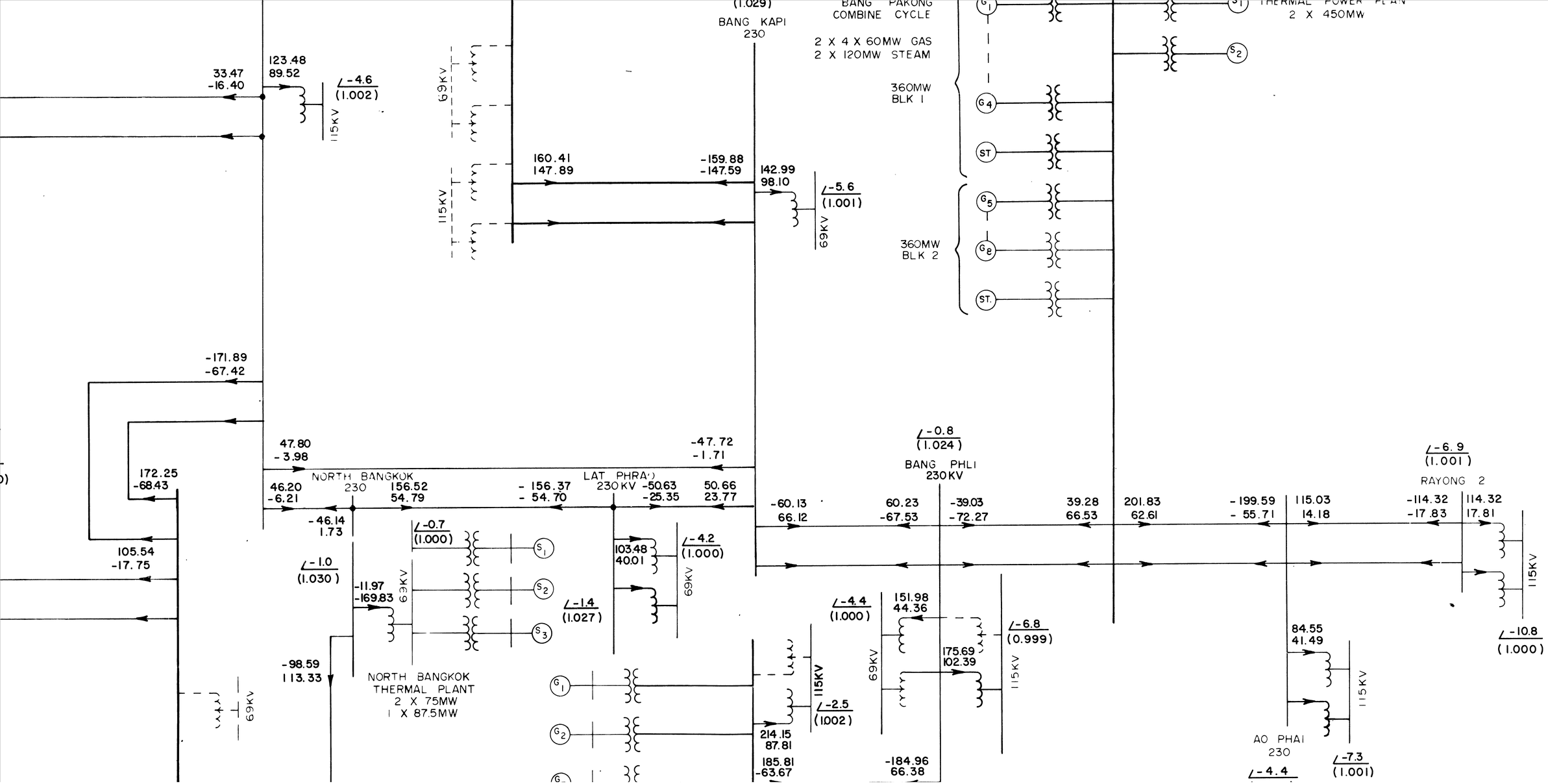
(1.029)
BANG KAPI
230
BANG PAKONG
COMBINE CYCLE
2 X 4 X 60MW GAS
2 X 120MW STEAM
THERMAL POWER PLAN
2 X 450MW
360MW
BLK 1
360MW
BLK 2
33.47
-16.40
123.48
89.52
-4.6
(1.002)
115KV
69KV
160.41
147.89
-159.88
-147.59
142.99
98.10
-5.6
(1.001)
-171.89
-67.42
47.80
-3.98
-47.72
-1.71
172.25
-68.43
NORTH BANGKOK
230
46.20
-6.21
156.52
54.79
-156.37
-54.70
LAT PHRAO
230KV
-50.63
-25.35
50.66
23.77
-46.14
1.73
-0.7
(1.000)
103.48
40.01
-4.2
(1.000)
105.54
-17.75
-1.0
(1.030)
-11.97
-169.83
-1.4
(1.027)
-98.59
113.33
NORTH BANGKOK
THERMAL PLANT
2 X 75MW
1 X 87.5MW
-0.8
(1.024)
BANG PHLI
230KV
-60.13
66.12
60.23
-67.53
-39.03
-72.27
39.28
66.53
201.83
62.61
-199.59
-55.71
115.03
14.18
-6.9
(1.001)
RAYONG 2
-114.32
-17.83
114.32
17.81
-10.8
(1.000)
-4.4
(1.000)
151.98
44.36
-6.8
(0.999)
175.69
102.39
-2.5
(1.002)
214.15
87.81
185.81
-63.67
-184.96
66.38
84.55
41.49
AO PHAI
230
-7.3
(1.001)
-4.4

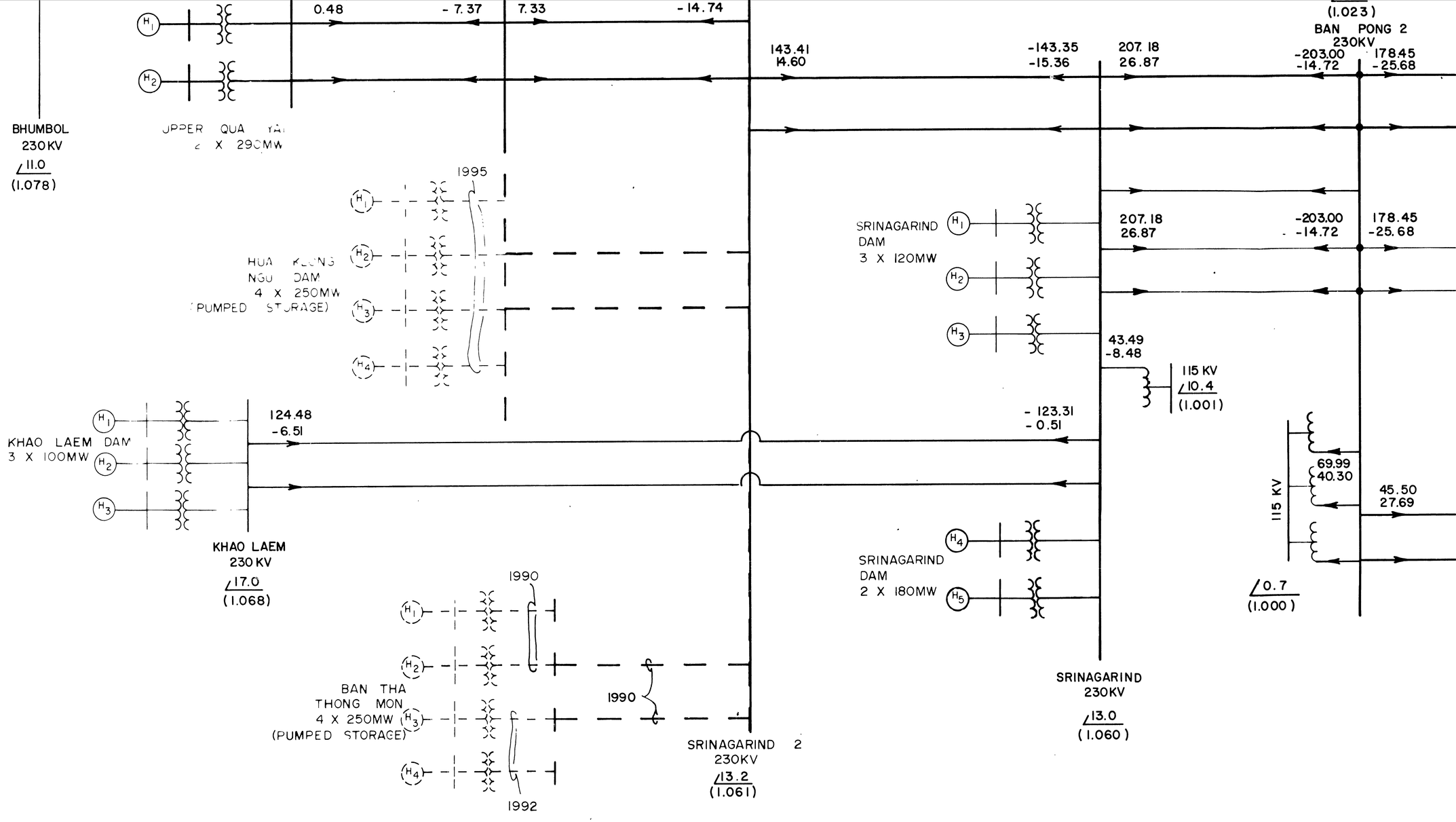
0.48
- 7.37
7.33
- 14.74
143.41
14.60
-143.35
-15.36
207.18
26.87
-203.00
-14.72
178.45
-25.68
(1.023)
BAN PONG 2
230KV
BHUMBOL
230KV
11.0
(1.078)
UPPER QUA YAI
2 X 290MW
1995
HUA KEONG
NGU DAM
4 X 250MW
(PUMPED STORAGE)
SRINAGARIND
DAM
3 X 120MW
207.18
26.87
-203.00
-14.72
178.45
-25.68
43.49
-8.48
115 KV
10.4
(1.001)
- 123.31
- 0.51
124.48
-6.51
KHAO LAEM DAM
3 X 100MW
KHAO LAEM
230 KV
17.0
(1.068)
69.99
40.30
45.50
27.69
115 KV
SRINAGARIND
DAM
2 X 180MW
0.7
(1.000)
1990
BAN THA
THONG MON
4 X 250MW
(PUMPED STORAGE)
1990
1992
SRINAGARIND 2
230KV
13.2
(1.061)
SRINAGARIND
230KV
13.0
(1.060)

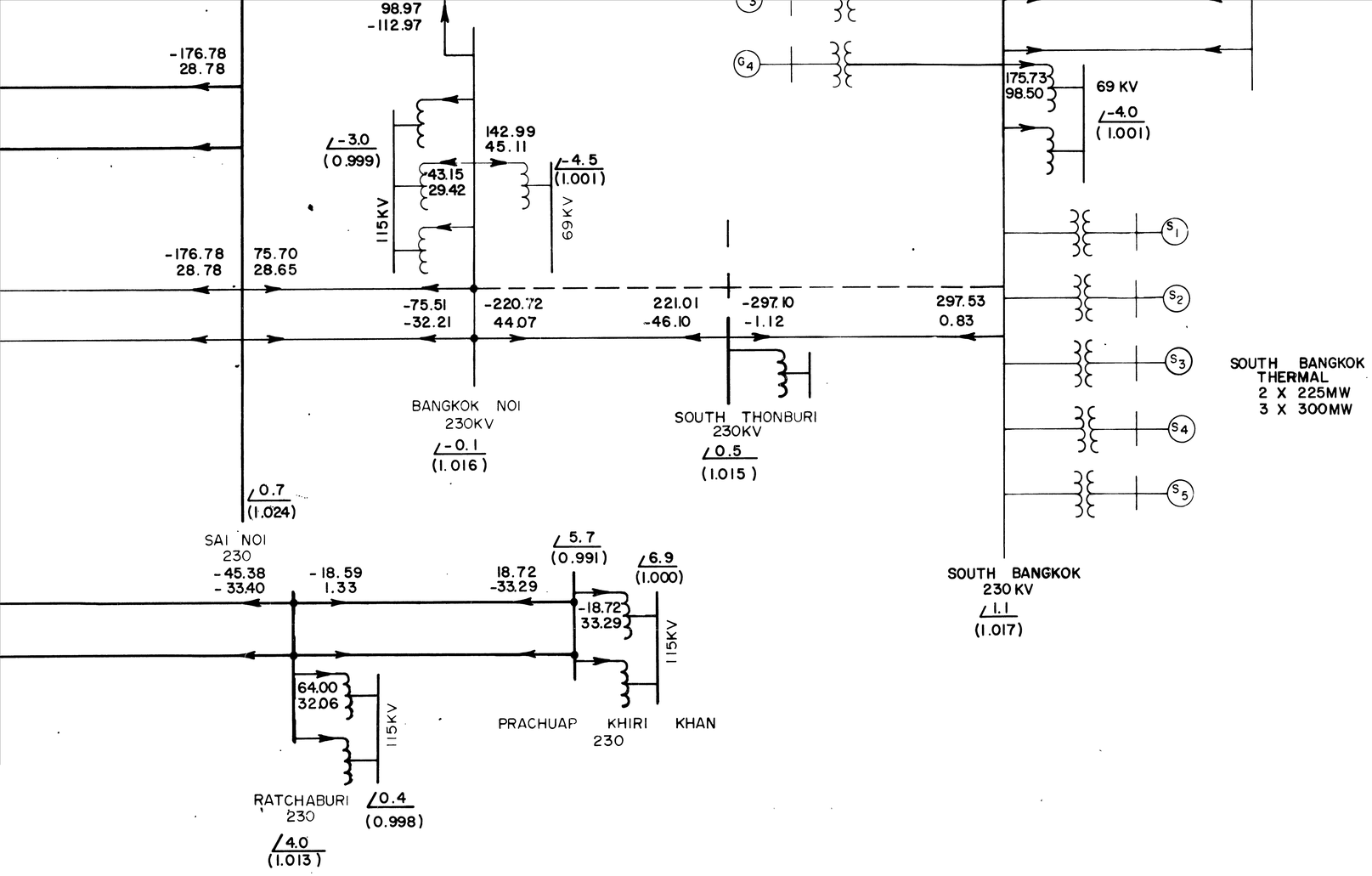

ELECTRIC GENERATING AUTHORITY
OF THAILAND
MAE MOH TO MIN BURI
230 KV TRANSMISSION ALTERNATE
1988 BASE CASE

Consultants

LEMCO ENGINEERS (INTERNATIONAL), INC.
ST. LOUIS, MISSOURI

PNMN0007
8 & 10

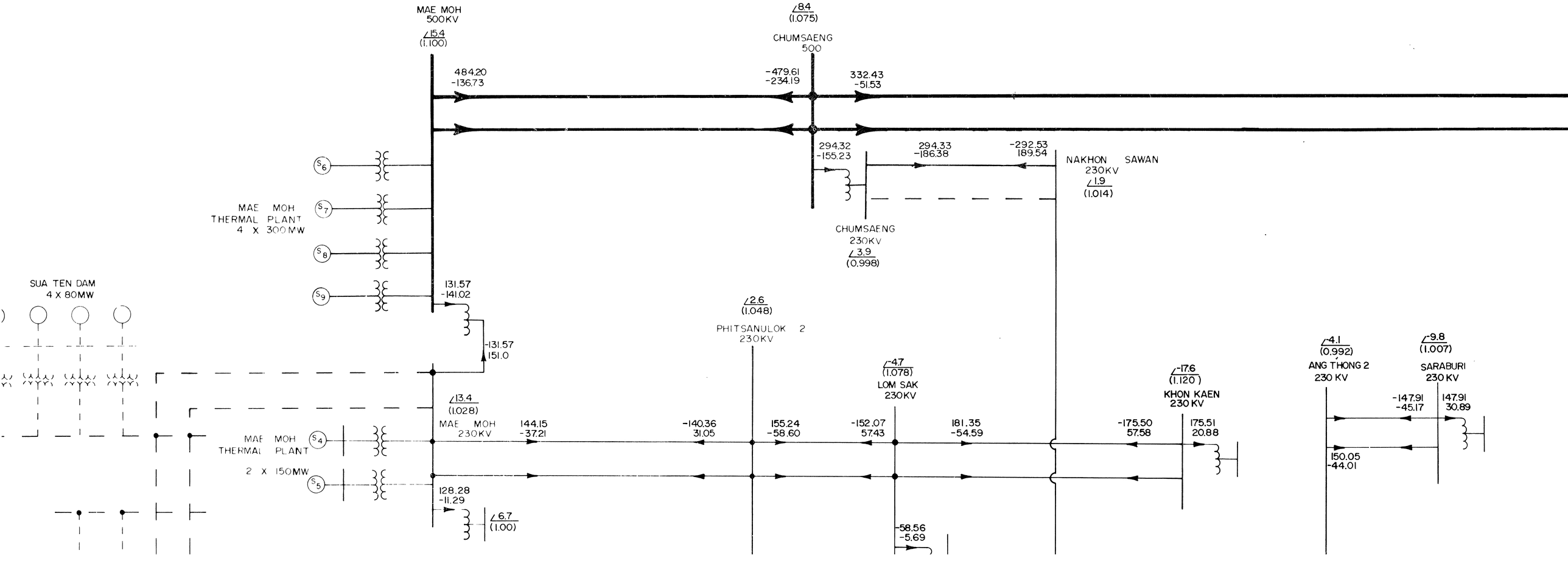
MAE MOH
500KV
15.4
(1.100)
8.4
(1.075)
CHUMSAENG
500
484.20
-136.73
-479.61
-234.19
332.43
-51.53
294.32
-155.23
294.33
-186.38
-292.53
189.54
NAKHON SAWAN
230KV
1.9
(1.014)
CHUMSAENG
230KV
3.9
(0.998)
MAE MOH
THERMAL PLANT
4 X 300MW
SUA TEN DAM
4 X 80MW
131.57
-141.02
-131.57
151.0
2.6
(1.048)
PHITSANULOK 2
230KV
-4.7
(1.078)
LOM SAK
230KV
-17.6
(1.120)
KHON KAEN
230 KV
-4.1
(0.992)
ANG THONG 2
230 KV
-9.8
(1.007)
SARABURI
230 KV
13.4
(1.028)
MAE MOH
230KV
144.15
-37.21
-140.36
31.05
155.24
-58.60
-152.07
57.43
181.35
-54.59
-175.50
57.58
175.51
20.88
-147.91
-45.17
147.91
30.89
150.05
-44.01
MAE MOH
THERMAL PLANT
2 X 150MW
128.28
-11.29
6.7
(1.00)
-58.56
-5.69

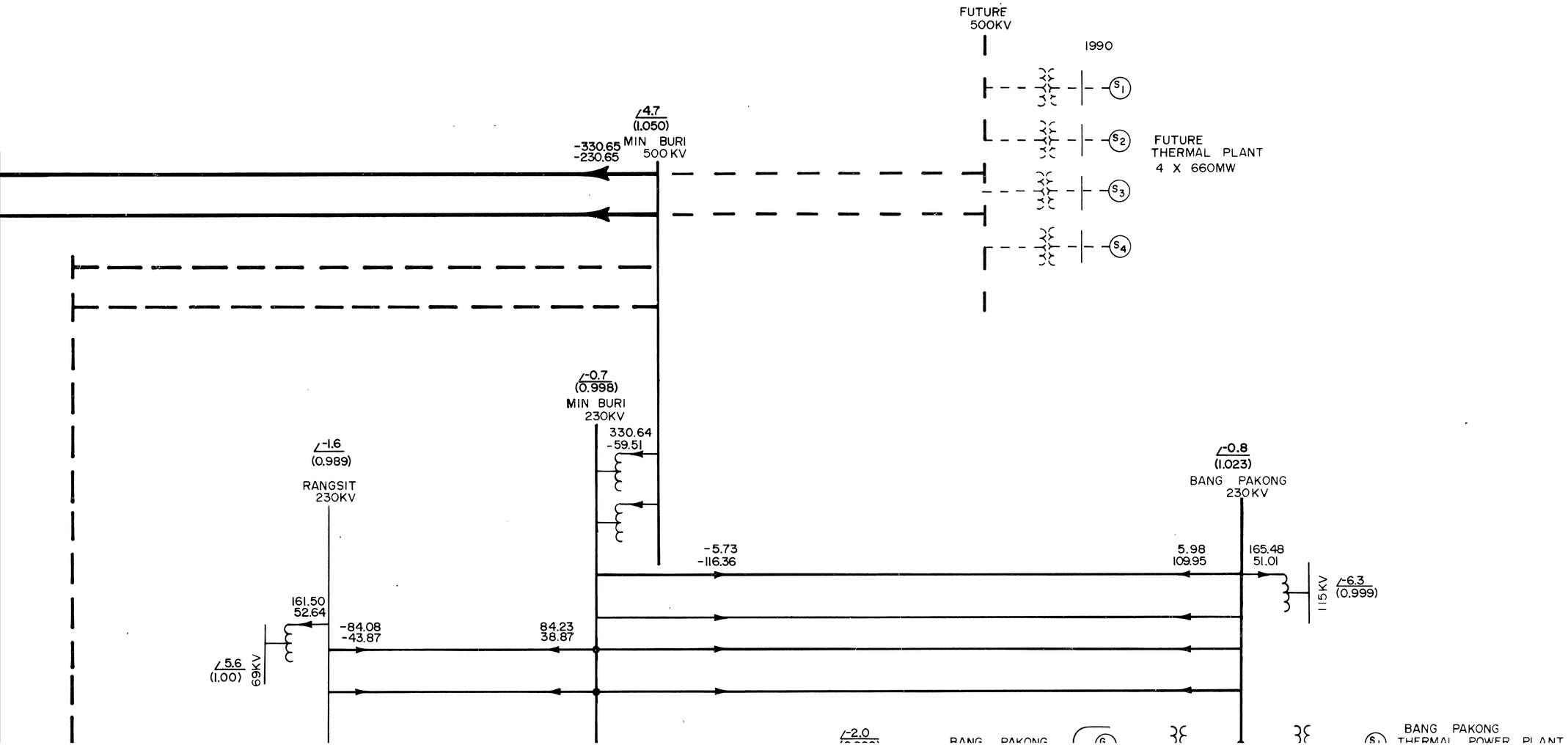
FUTURE
500KV
1990
S1
S2
S3
S4
FUTURE
THERMAL PLANT
4 X 660MW
4.7
(1.050)
-330.65
-230.65
MIN BURI
500 KV
-0.7
(0.998)
MIN BURI
230KV
330.64
-59.51
-1.6
(0.989)
RANGSIT
230KV
-0.8
(1.023)
BANG PAKONG
230KV
-5.73
-116.36
5.98
109.95
165.48
51.01
115KV
-6.3
(0.999)
161.50
52.64
-84.08
-43.87
84.23
38.87
5.6
(1.00)
69KV
-2.0
BANG PAKONG
THERMAL POWER PLANT

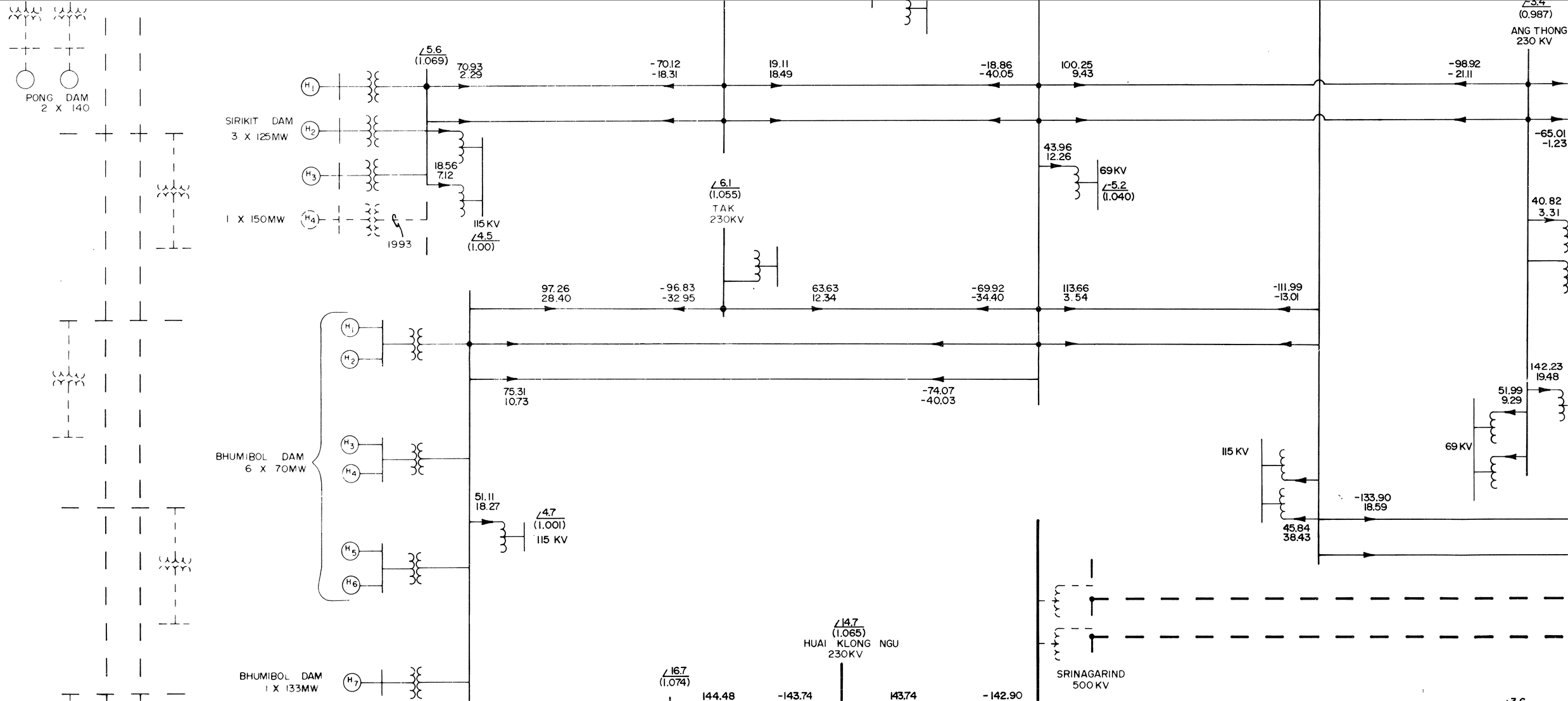
PONG DAM
2 X 140
SIRIKIT DAM
3 X 125MW
1 X 150MW
1993
5.6
(1.069)
70.93
2.29
-70.12
-18.31
19.11
18.49
-18.86
-40.05
100.25
9.43
-98.92
-21.11
3.4
(0.987)
ANG THONG
230 KV
-65.01
-1.23
18.56
7.12
115 KV
4.5
(1.00)
43.96
12.26
69KV
-5.2
(1.040)
6.1
(1.055)
TAK
230KV
40.82
3.31
97.26
28.40
-96.83
-32.95
63.63
12.34
-69.92
-34.40
113.66
3.54
-111.99
-13.01
75.31
10.73
-74.07
-40.03
142.23
19.48
51.99
9.29
69 KV
BHUMIBOL DAM
6 X 70MW
115 KV
-133.90
18.59
45.84
38.43
51.11
18.27
4.7
(1.001)
115 KV
14.7
(1.065)
HUAI KLONG NGU
230KV
SRINAGARIND
500 KV
BHUMIBOL DAM
1 X 133MW
16.7
(1.074)
144.48
-143.74
143.74
-142.90

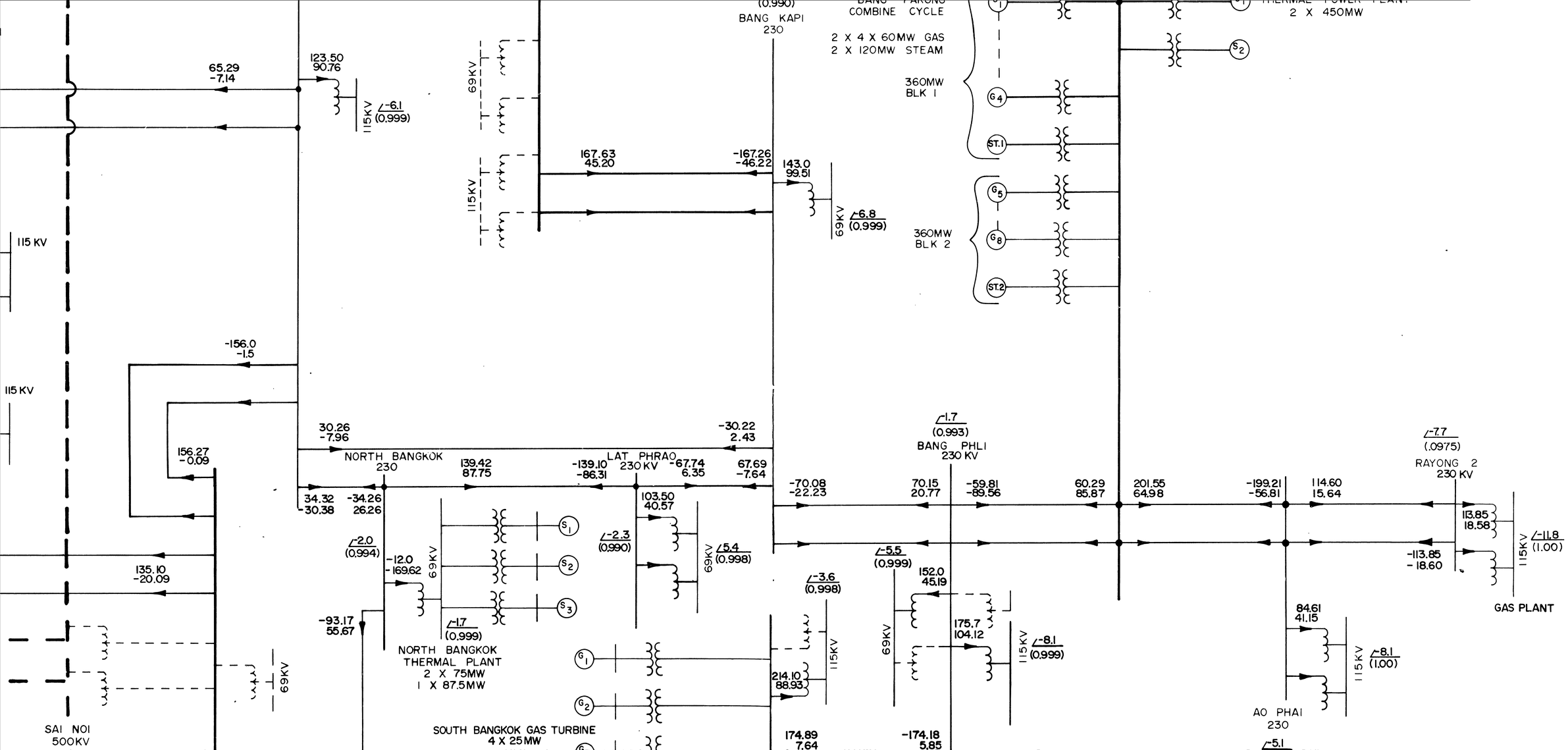
(0.990)
BANG KAPI
230
COMBINE CYCLE
2 X 4 X 60MW GAS
2 X 120MW STEAM
THERMAL POWER PLANT
2 X 450MW
360MW
BLK 1
360MW
BLK 2
65.29
-7.14
123.50
90.76
/-6.1
(0.999)
115KV
69KV
115 KV
167.63
45.20
-167.26
-46.22
143.0
99.51
/-6.8
(0.999)
-156.0
-1.5
30.26
-7.96
-30.22
2.43
156.27
-0.09
NORTH BANGKOK
230
139.42
87.75
-139.10
-86.31
LAT PHRAO
230 KV
-67.74
6.35
67.69
-7.64
34.32
-30.38
-34.26
26.26
/-2.0
(0.994)
-12.0
-169.62
/-1.7
(0.999)
NORTH BANGKOK
THERMAL PLANT
2 X 75MW
1 X 87.5MW
103.50
40.57
/-2.3
(0.990)
/5.4
(0.998)
/-1.7
(0.993)
BANG PHLI
230 KV
-70.08
-22.23
70.15
20.77
-59.81
-89.56
60.29
85.87
201.55
64.98
-199.21
-56.81
114.60
15.64
/-7.7
(.0975)
RAYONG 2
230 KV
113.85
18.58
-113.85
-18.60
/-11.8
(1.00)
GAS PLANT
135.10
-20.09
-93.17
55.67
/-3.6
(0.998)
/-5.5
(0.999)
152.0
45.19
175.7
104.12
/-8.1
(0.999)
214.10
88.93
84.61
41.15
/-8.1
(1.00)
AO PHAI
230
SAI NOI
500KV
SOUTH BANGKOK GAS TURBINE
4 X 25MW
174.89
7.64
-174.18
5.85
/-5.1

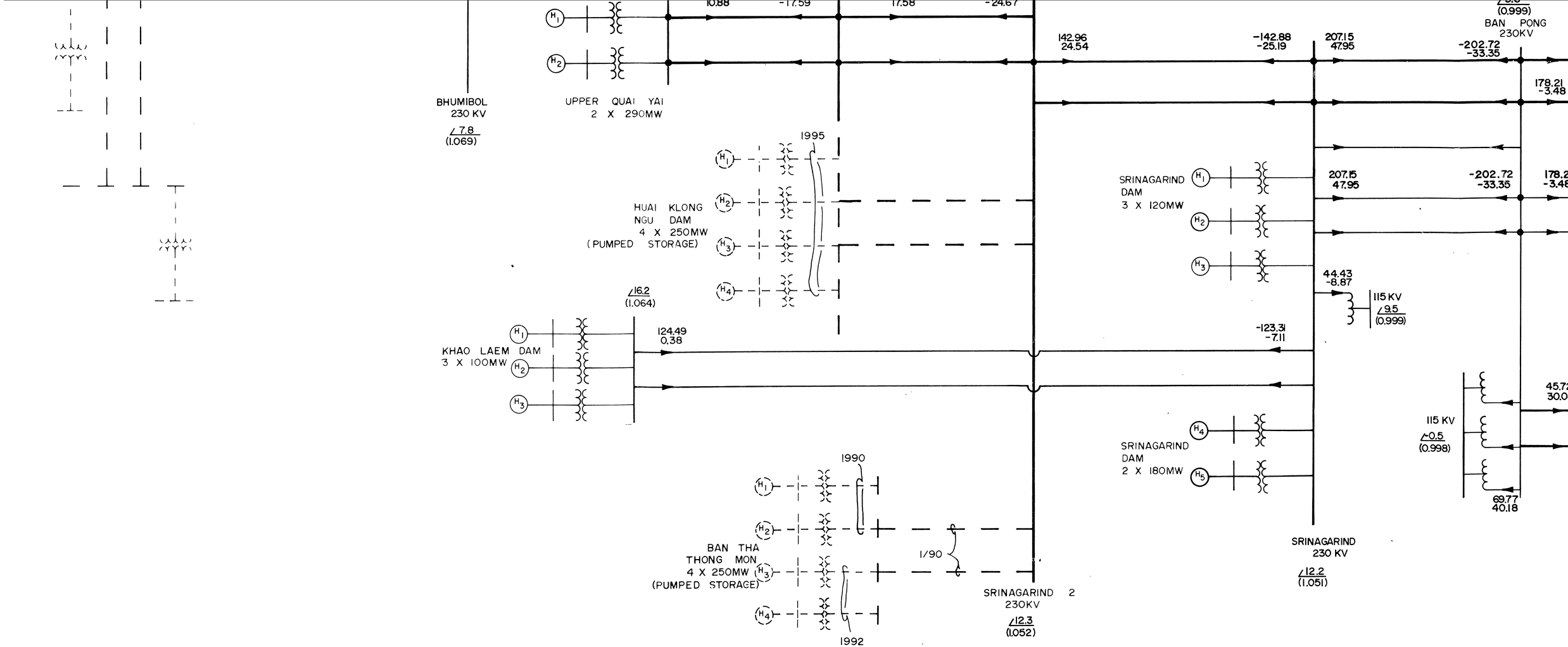
BHUMIBOL
230 KV
/7.8
(1.069)
UPPER QUAI YAI
2 X 290MW
10.88
-17.59
17.58
-24.67
142.96
24.54
-142.88
-25.19
207.15
47.95
-202.72
-33.35
(0.999)
BAN PONG
230KV
178.21
-3.48
1995
HUAI KLONG
NGU DAM
4 X 250MW
(PUMPED STORAGE)
SRINAGARIND
DAM
3 X 120MW
44.43
-8.87
115 KV
/9.5
(0.999)
/16.2
(1.064)
KHAO LAEM DAM
3 X 100MW
124.49
0.38
-123.31
-7.11
115 KV
/-0.5
(0.998)
69.77
40.18
SRINAGARIND
DAM
2 X 180MW
1990
BAN THA
THONG MON
4 X 250MW
(PUMPED STORAGE)
1/90
1992
SRINAGARIND 2
230KV
/12.3
(1.052)
SRINAGARIND
230 KV
/12.2
(1.051)

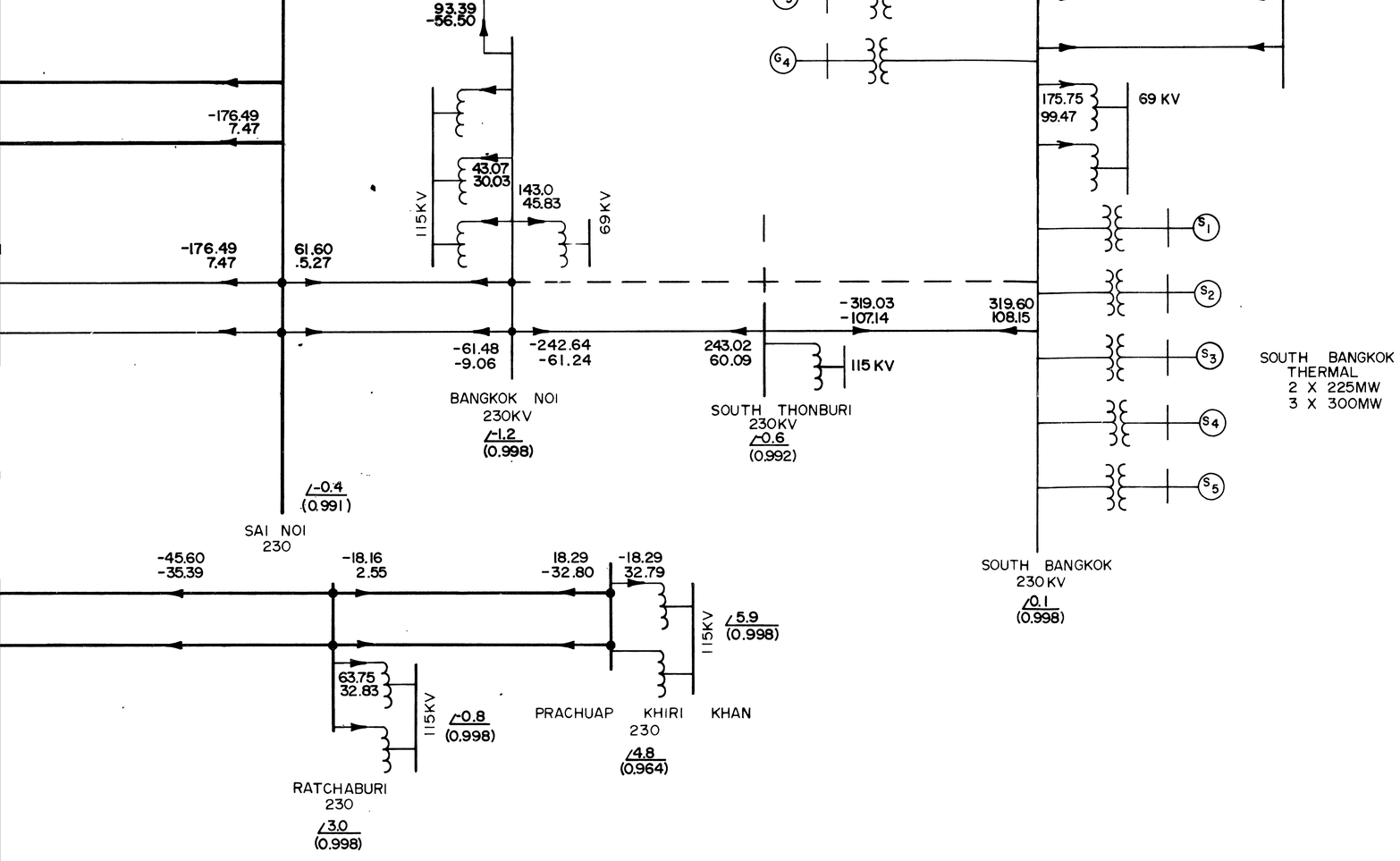

ELECTRIC GENERATING AUTHORITY
OF THAILAND
MAE MOH TO MIN BURI
500 KV TRANSMISSION PROJECT
1988 BASE CASE

PNAA0007

9 of 10

Consultants

LEMCO ENGINEERS (INTERNATIONAL), INC.
ST. LOUIS, MISSOURI

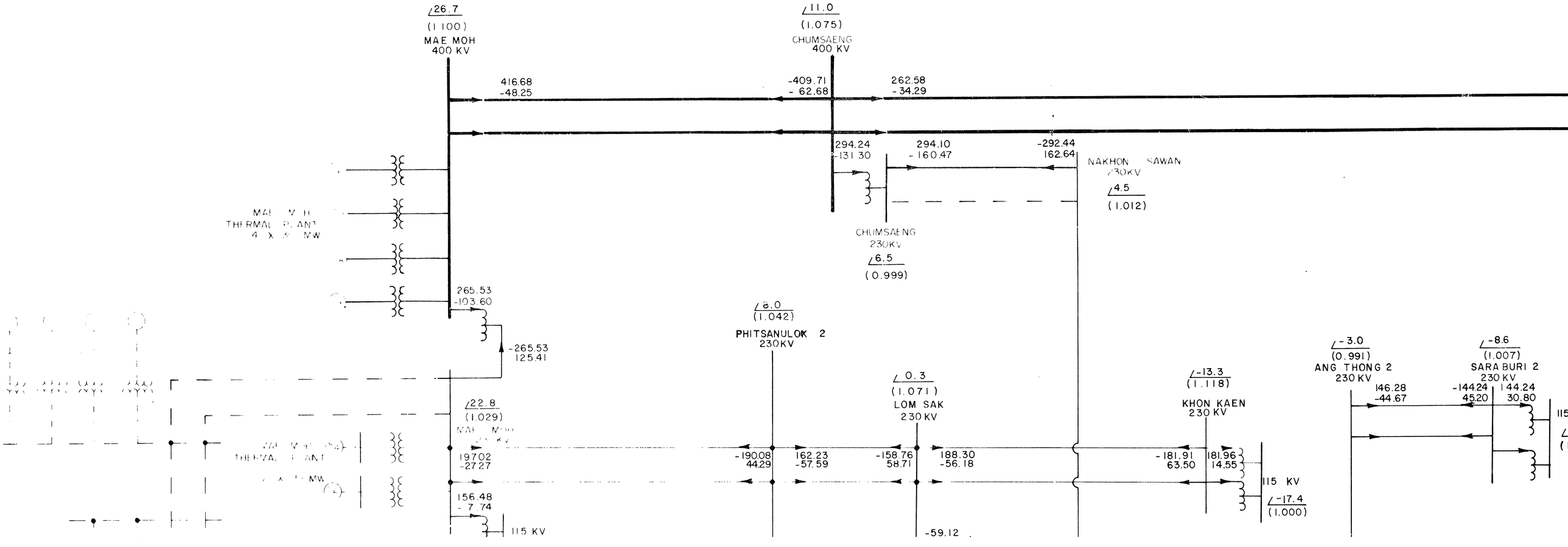
26.7
(1.100)
MAE MOH
400 KV
11.0
(1.075)
CHUMSAENG
400 KV
416.68
-48.25
-409.71
- 62.68
262.58
- 34.29
294.24
-131.30
294.10
- 160.47
-292.44
162.64
NAKHON SAWAN
230KV
4.5
(1.012)
CHUMSAENG
230KV
6.5
(0.999)
265.53
-103.60
-265.53
125.41
8.0
(1.042)
PHITSANULOK 2
230KV
22.8
(1.029)
19.702
-27.27
156.48
- 7.74
115 KV
0.3
(1.071)
LOM SAK
230 KV
-190.08
44.29
162.23
-57.59
-158.76
58.71
188.30
-56.18
-59.12
-13.3
(1.118)
KHON KAEN
230 KV
-181.91
63.50
181.96
14.55
115 KV
-17.4
(1.000)
-3.0
(0.991)
ANG THONG 2
230 KV
146.28
-44.67
-8.6
(1.007)
SARA BURI 2
230 KV
-144.24
45.20
144.24
30.80

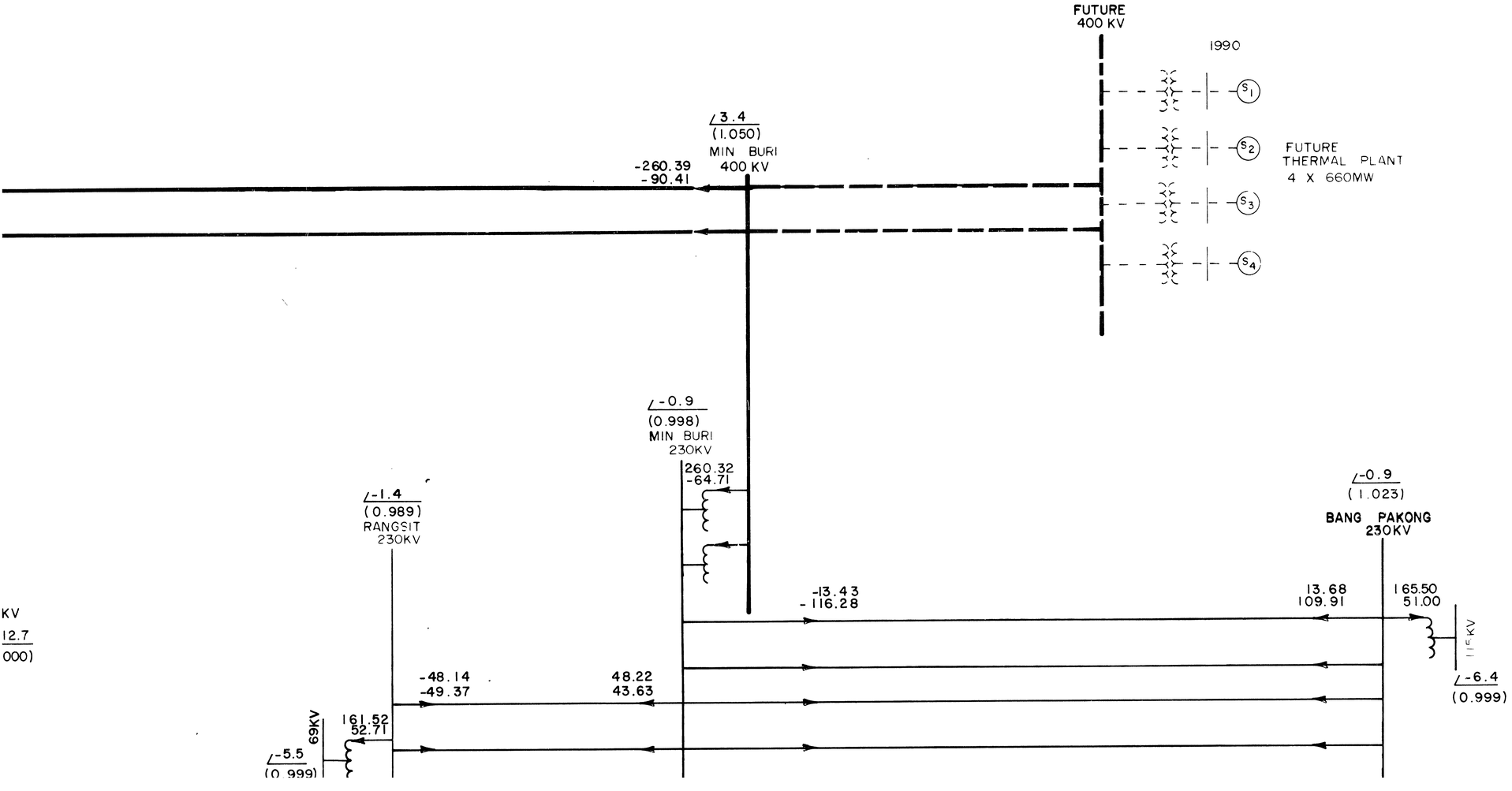
FUTURE
400 KV
1990
S1
S2
S3
S4
FUTURE
THERMAL PLANT
4 X 660MW
/3.4
(1.050)
MIN BURI
400 KV
-260.39
-90.41
/-0.9
(0.998)
MIN BURI
230KV
260.32
-64.71
/-1.4
(0.989)
RANGSIT
230KV
/-0.9
(1.023)
BANG PAKONG
230KV
-13.43
-116.28
13.68
109.91
165.50
51.00
115 KV
/-6.4
(0.999)
-48.14
-49.37
48.22
43.63
161.52
52.71
69KV
/-5.5
(0.999)

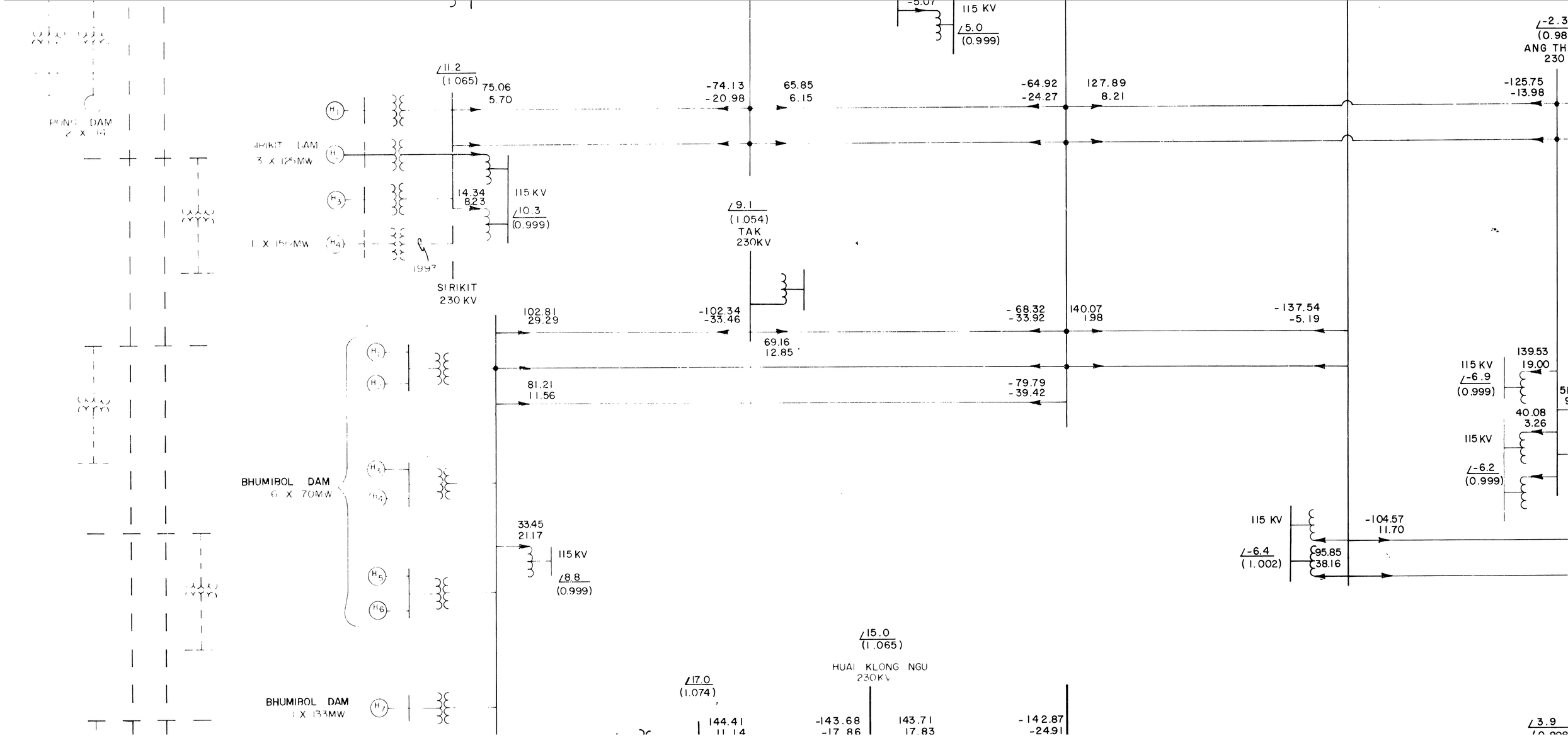
PONG DAM
2 X 19
SIRIKIT DAM
3 X 125MW
1 X 150MW
199°
SIRIKIT
230 KV
11.2
(1.065)
75.06
5.70
14.34
8.23
115 KV
10.3
(0.999)
-74.13
-20.98
65.85
6.15
-64.92
-24.27
127.89
8.21
-125.75
-13.98
-5.07
115 KV
5.0
(0.999)
9.1
(1.054)
TAK
230KV
102.81
29.29
-102.34
-33.46
69.16
12.85
-68.32
-33.92
140.07
1.98
-137.54
-5.19
81.21
11.56
-79.79
-39.42
BHUMIBOL DAM
6 X 70MW
BHUMIBOL DAM
1 X 133MW
33.45
21.17
115 KV
8.8
(0.999)
115 KV
-6.9
(0.999)
139.53
19.00
40.08
3.26
115 KV
-6.2
(0.999)
115 KV
-6.4
(1.002)
95.85
38.16
-104.57
11.70
15.0
(1.065)
HUAI KLONG NGU
230KV
17.0
(1.074)
144.41
11.14
-143.68
-17.86
143.71
17.83
-142.87
-24.91
ANG TH
230

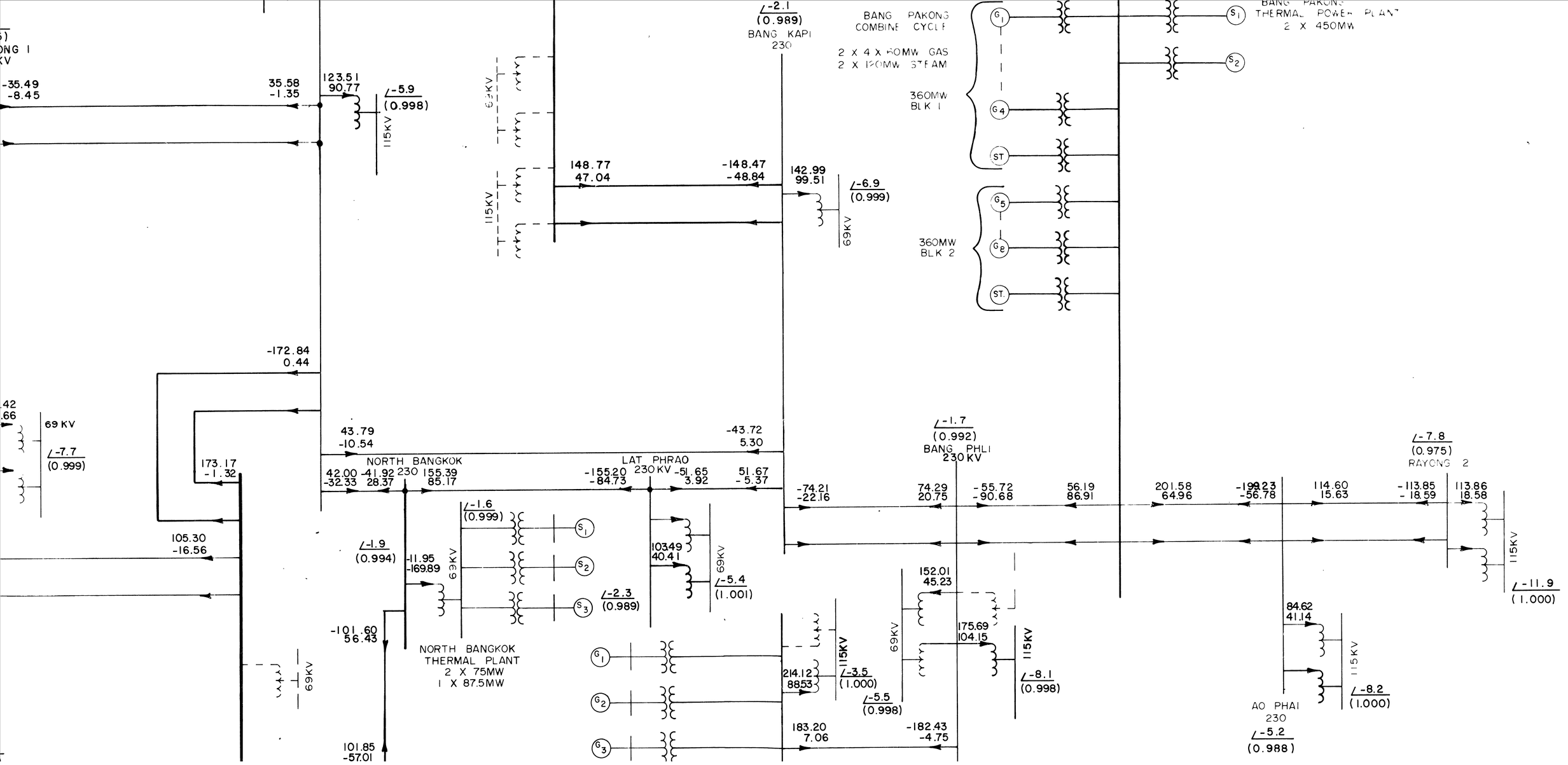
BANG PAKONG COMBINE CYCLE
2 X 4 X 60MW GAS
2 X 120MW STEAM
360MW BLK 1
360MW BLK 2
BANG PAKONG THERMAL POWER PLANT
2 X 450MW
BANG KAPI 230
/-2.1 (0.989)
/-5.9 (0.998)
/-6.9 (0.999)
/-7.7 (0.999)
/-1.7 (0.992)
BANG PHLI 230 KV
/-7.8 (0.975)
RAYONG 2
/-11.9 (1.000)
/-1.6 (0.999)
/-1.9 (0.994)
/-2.3 (0.989)
/-5.4 (1.001)
/-3.5 (1.000)
/-5.5 (0.998)
/-8.1 (0.998)
/-8.2 (1.000)
/-5.2 (0.988)
NORTH BANGKOK 230
LAT PHRAO 230 KV
NORTH BANGKOK THERMAL PLANT
2 X 75MW
1 X 87.5MW
AO PHAI 230
69 KV
115KV
69KV
35.58 -1.35
123.51 90.77
148.77 47.04
-148.47 -48.84
142.99 99.51
-172.84 0.44
43.79 -10.54
-43.72 5.30
173.17 -1.32
42.00 -32.33
-41.92 28.37
155.39 85.17
-155.20 -84.73
-51.65 3.92
51.67 -5.37
-74.21 -22.16
74.29 20.75
-55.72 -90.68
56.19 86.91
201.58 64.96
-199.23 -56.78
114.60 15.63
-113.85 -18.59
113.86 18.58
105.30 -16.56
-11.95 -169.89
-101.60 56.43
101.85 -57.01
103.49 40.41
214.12 88.53
183.20 7.06
-182.43 -4.75
152.01 45.23
175.69 104.15
84.62 41.14

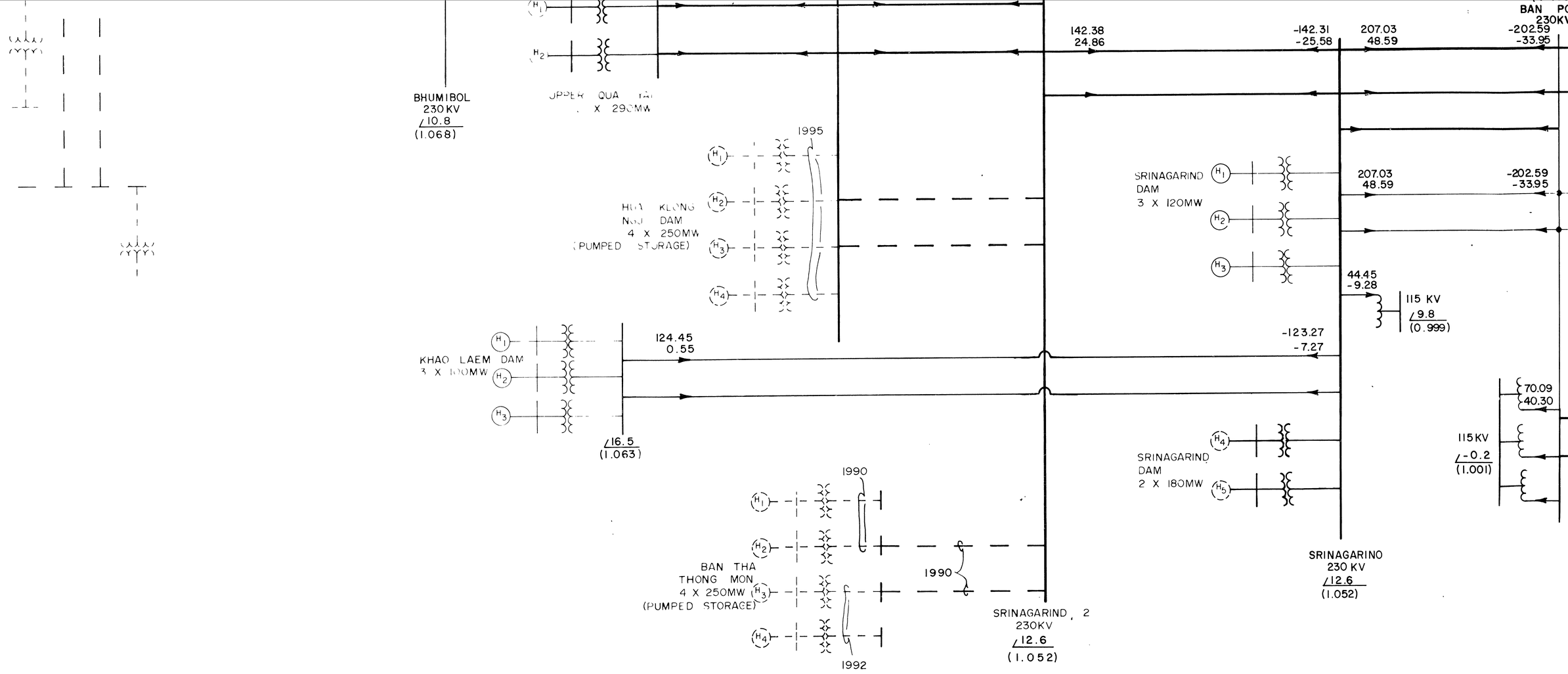
BHUMIBOL
230 KV
/10.8
(1.068)
UPPER QUA
X 290MW
142.38
24.86
-142.31
-25.58
207.03
48.59
-202.59
-33.95
1995
HUA KLONG
NGU DAM
4 X 250MW
(PUMPED STORAGE)
SRINAGARIND
DAM
3 X 120MW
207.03
48.59
-202.59
-33.95
44.45
-9.28
115 KV
/9.8
(0.999)
KHAO LAEM DAM
3 X 100MW
124.45
0.55
-123.27
-7.27
/16.5
(1.063)
70.09
40.30
115KV
/-0.2
(1.001)
SRINAGARIND
DAM
2 X 180MW
1990
BAN THA
THONG MON
4 X 250MW
(PUMPED STORAGE)
1990
1992
SRINAGARIND 2
230KV
/12.6
(1.052)
SRINAGARIND
230 KV
/12.6
(1.052)

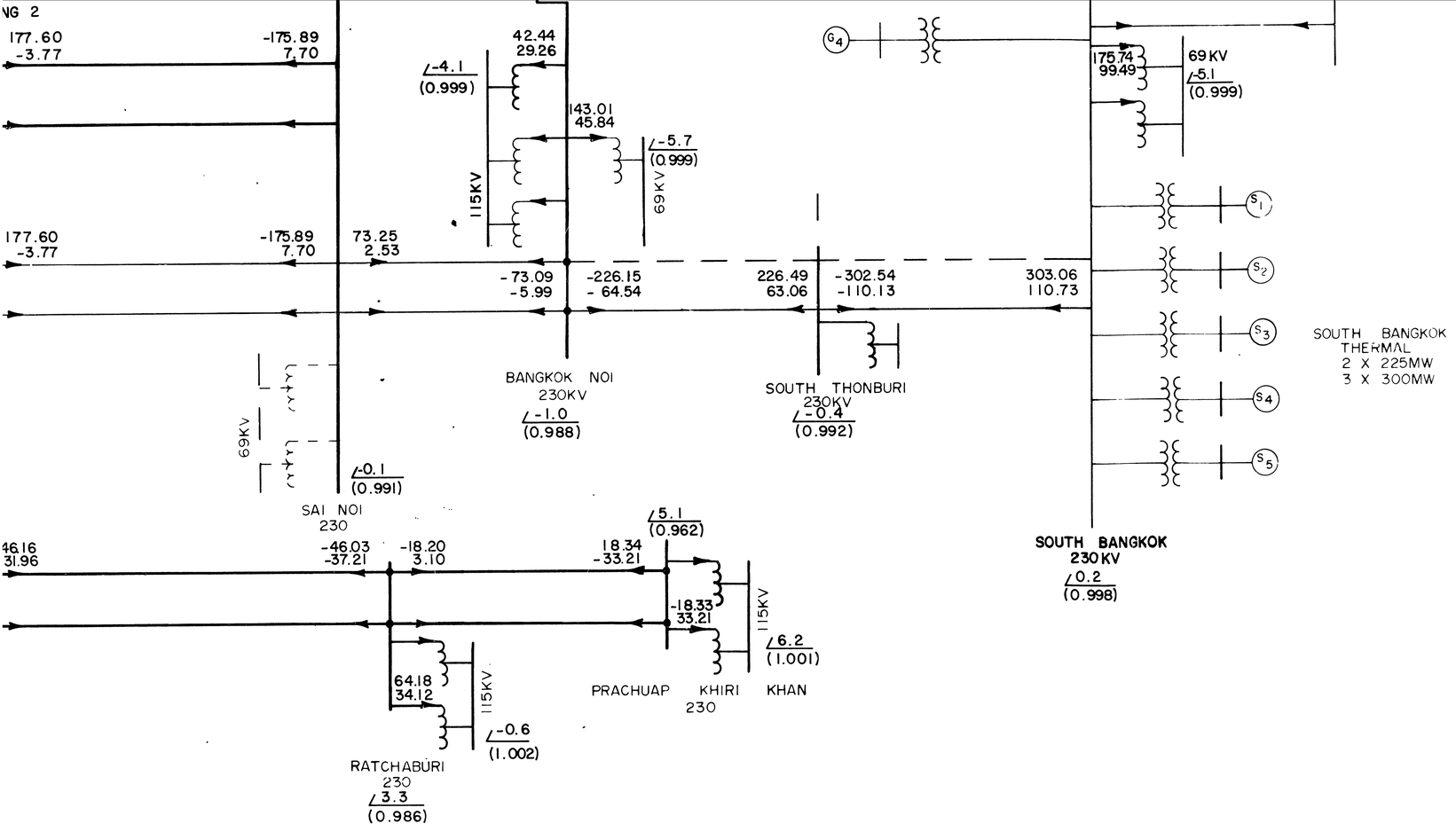

ELECTRIC GENERATING AUTHORITY
OF THAILAND
MAE MOH TO MIN BURI
400 KV TRANSMISSION ALTERNATE
1988 BASE CASE

PNAMG 007

10 g. 10

Consultants

LEMCO ENGINEERS (INTERNATIONAL), INC.
ST. LOUIS, MISSOURI