PN AAD-
ISN 34620

UNITED STATES AGENCY FOR INTERNATIONAL DEVELOPMENT

REGIONAL HOUSING AND URBAN DEVELOPMENT OFFICE

Kenya Secondary Town Shelter and Community Facilities Project Study.

SUPPLEMENTARY INFRASTRUCTURE REPORT

G.J. de Kruijff , July 1980.

TABLE OF CONTENTS

	page
1.0 Roads	1
2.0 Surface water drains	4
3.0 Waterborne sanitation	6
4.0 Dry disposal systems	11
5.0 The ventilated improved pit latrine (VIP)	15
6.0 The ventilated permanent alternating pit (VPAP)	17
7.0 Pour-flush toilets	21
8.0 Water supply	25
9.0 Water storage	31
10.0 Fire requirements	33
11.0 Costing of sanitation possibilities	36
12.0 Sanitation upgrading	38
13.0 Sanitation technology selection	41
Appendices	45

1.0 ROADS

The accommodation of circulation movements in a housing estate takes two forms:

1. vehicles-roads and car parking
2. pedestrians bicycles - foothpaths

Nowadays the rule of thumb allocation of land circulation in low cost housing estates is 20% of the total area. This to minimise costs in infrastructure, roads are responsible of 30-50% of the infrastructure costs in low income housing estates. If the 20% allocation for circulation will rise the overall development cost per plot will also rise. In practice it appears to be difficult to adhere to the set proportion of 20% gross residential area.

Obviously this is the result from two current requirements:

1. a requirement that every plot shall have road access
2. excessive road reserve widths

The present and future levels of car ownership and therefore the need for road access in low income housing estates has been a matter of considerable discussion in the Working Parties of the Kenya Low-Cost Housing By-Law Study. The target population of those estates has probably insufficient income to purchase cars. Particularly when we take into consideration the recent and potential future large increases in the cost of fuel linked with the present government policy to reduce the importation of private cars.

Already in 1970 the Nairobi Urban Study Group found that in 1970 45% of all trips were walking trips. Simple observations reveal that walking and public transport (including matatus) are the principal means of transport for the majority of the population. In certain townships as for example in Siaya the role of the bicycle as a way of transport will probably increase when incomes rise.

For the Second World Bank Project the Nairobi City Council recommended a car parking provision of one car space per plot. With a maximum of 50% of that total number to be provided off-plots, along roads or in communal spaces. In case car ownership is not according to expectations the communal spaces can be utilised for other useful purposes.

If it is accepted that the primary distributor will be the principal road within the area and will accommodate public transport i.e. buses and matatus, it is difficult to foresee heavy vehicular traffic usage of the local distributor roads or the minor access roads other than the refuse collection vehicle and the occasional car. A recommendation of the Building By-Law Study is than also to reduce the total road reserves and to make them more appropriate for actual requirements. The reduction of these road reserves will reduce maintenance requirements and will also discourage the parking of heavy vehicles (with special reference to petrol tankers) in a residential area. In accordance with this study we therefore propose for the Kenya Secondary Towns the following road cross-sections.

Primary distributor to carry buses

Right of way 18 meters, carriage way 7.00 meters

Bitumen Surface, 150mm stone base, 150mm gravel sub-base and 100mm improved subgrade if existing soil cannot achieve CBR of 12%

This type of road is not considered to be relevant for the USAID Secondary Town study. This type of road will be the main road through the town.

Local distributor : to distribute traffic within the housing area.

right of way 10,5 meters,5,5 meters carriage way 25 mm premix surfacing,150 mm stone base and sub grad coarse improved to achieve a CBR of 12 %.

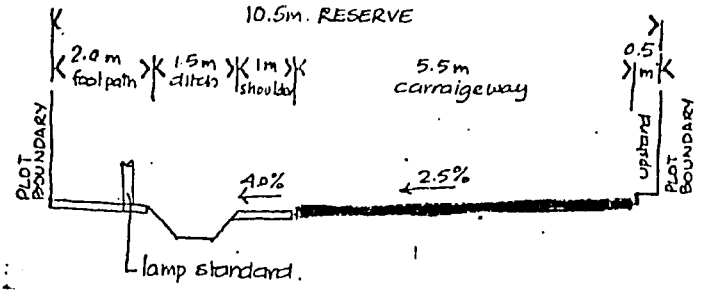

Minor access roads : to provide access to property or carparks,cul de sacs.

7,5 meter reserve with 4 meter carriage way 150 mm stone base on improved subgrade coarse,foot path with 25 mm premix surface binding.

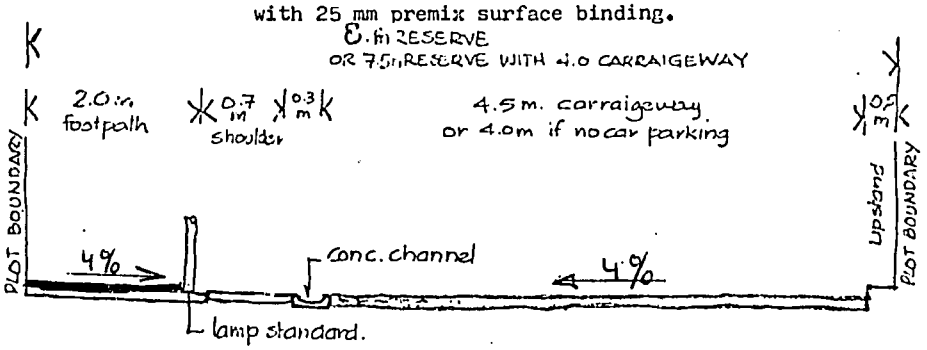

Pedestrian roads : with emergency access for fire engines and ambulances.

5 meter reserve,150 mm stone base with foot path of 1,5 meters with 25 mm premix surface binding.

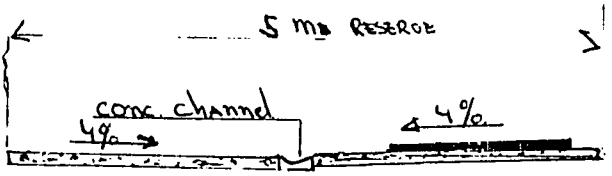

All the necessary services such as sewerage and water supply can be accomodated in the foot path reserves

2.0 SURFACE WATER DRAINS

These drains are provided to accommodate excess rain water which is unable to be absorbed by the soil due to impermeable surfaces (bound roads, paved areas etc.) or due to the intensity of the rainfall. In Kenya rainfall is seasonal and during the wet seasons is characterised by torrential tropical showers. Therefore surface water drains must accommodate large volumes of water which quickly build-up and die-down. For the rest of the year the surface water drains are dry. As a result surface water drainage must have a large capacity to accommodate the sudden rainfall but do not receive the regular flushing action of lighter all-year round rainfall.

The surface water drains are normally sited along the roads and are usually open ditches. These ditches can be used as a physical demarcation between the carriage way and the foot path. The actual dimensions of the storm water drains are subject to calculation dependent upon the lengths, gradients, storm intensity and therefore anticipated flows.

It is recommended to design these drains with the Tropical Hydograph Method. Drains should be designed for 1 in 5 years storms with the major outfalls designed for a 1 in 10 year storm.

Because of this overdimensioning and infrequent rainfall open ditches are, unless regularly cleared, used as refuse dumps either deliberately or by accident. It is recommended to line at least the bottom section of the drains. This will enable maintenance to be carried out more easily and in addition the result will be that there is an increased surface water velocity which will decrease the risk of a blockage.

Where such a drain has to cross a road it is necessary to construct a culvert. It is recommended to construct this out of a rectangular section minimal dimensions of 30 x 30 cm or with a

pipe with an internal diameter of 30 cm. The headwalls should be made out of block or stonework head walls. Blockages normally occur in the culverts or at the entrance of the culverts. It is therefore recommended to incorporate into the headwalls a wide mazed metal screen which will alleviate the inside blockage problem and will facilitate easy maintenance.

The upkeep of surface water drains appears often to be neglected by the responsible authorities. Therefore other maintenance methods should be encouraged, such as by contracting the work to the private sector, or by motivating and organising community efforts on a neighbourhood basis.

3.0 WATERBORNE SANITATION

Many ill health problems of urban-low income families could be alleviated by a better water supply and a more appropriate excreta disposal method. However, the provision of these types of services are expensive.

The main aim for an appropriate sanitation system should be that every plot should be provided with a toilet. Out of an health point of view this should not be necessarily be a flush toilet.

In those townships where sewerage and adequate sewage treatment is available plots could be provided with individual sewer connections. These connections are based on a conventional high level cistern and a floor pan. As further calculations show this is definitely not the least cost solution and low income families find it difficult to maintain these type of facilities.

Studies reveal the following difficulties with sewerage schemes in Kenya:

- sewer blockages
  Because of the relatively high solids content of sewage, low income people normally cannot afford to spend money for toilet paper, but use more solid waste materials such as newspapers, corn cobs and other solids, a self-cleansing velocity of 0,9 meter/sec should be reached once a day. In addition sewage flows are often far below expectation. Low-income consumers have difficulties in paying their water bills. People are going to great lengths to reduce the water charges to an acceptable level, by means of reducing the amount of flushings or by temporarily closing the main water tap. It is therefore technically impossible to design a sewer in a low income housing estate on the basis of a self-cleansing velocity. Observations of sewer flows in low-income estates confirm that flows are insufficient to keep the solids in suspension. This means that very large lengths of sewer runs will not be self-cleansing

and blockages are likely to occur regularly. This will place a heavy burden on the maintenance abilities of the townships, where services are often ill-maintained.

- water needs

This system is very extravagant with water. It is not unusual to find that 40 litres of wholesome water per person per day is turned into sewage by flushing of a toilet pan. This water is often a scarce resource in the townships concerned, for example in Siaya.

In addition temporary water shortages are common in the smaller towns in Kenya. These temporary water shortages will make the excreta system inoperative, hence the need for a back up service by means of a water storage tank, which will raise the cost of this service.

- construction

Current practice is to construct sewers out of the cheapest material available. Therefore most of the sewers constructed in Kenya are made out of concrete. Particularly the cheap joining process is a constant source of sewer troubles and recommended is therefore to employ better techniques even in case they are more costly.

Manholes are very costly, between 25-45% of the total cost of sewerage scheme. In particularly when costs are cut, light weight steel manhole covers will be used, which will be used in the alternative market system. Therefore it is recommended to use only manhole covers of heavy weight made out of concrete. Furthermore, it is often difficult to construct straight sewer lines in unplanned settlements which have to be upgraded.

- environmental aspects

The conventional waterborne sewerage system means adding 40 litres of expensively treated and transported water to ½ a litre of excreta per person per day and therefore treating the

sewage thus produced in order to remove the excreta before the effluent can be discharged back into a river or lake. The logic and expenses of this method can be called into question. Sewage treatment even by the means of ponds is not a cheap process, costs are often higher than water treatment costs. Sewage treatment presents particular problems in Kenya. Observations show that in particular outside Nairobi sewage treatment facilities are often not properly maintained, due to lack of operational skills and finance.

These observations show that streams, which are often the main water source for rural people, often become polluted by pathogens. The individuals excreta problem has been transferred to the community at large. And if adequate sewage treatement is not available itare the poorest community members of the neighbouring communities that will suffer from the ill-effects o the implemented improvements.

In light of the foregoing the following recommendations are made when waterborne sewerage is to be provided in housing developments.

- The sewage treatement facility should be able to achieve less than 5000 faecal coliform per 100 ml if the effluent has to be released in surface water (WHO standard).

- Due to the fact that self-cleansing velocities in low-income estates cannot be achieved the following precautions should be taken.

- Special provisions should be made to facilitate that all sewers can be flushed.

- The joining of concrete sewer pipes should be made by rubber rings so that a flexible connection is made between rigid pipes.

- Plot connections should be constructed out of UPVC sewer pipe, 110 mm diameter, and be installed according to manufacturers instructions.

- Main sewer lines are recommended to be 225 mm concrete pipes or 200 mm UPVC pipes.

- UPVC pipes are highly recommended to be used in expansive soils, such as black cotton.

- Manholes to be provided at junctions, changes of direction and or gradient, and on straight lengths at spacings not exceeding 60 metres.

- The Local Authority should be equipped and be trained to maintain these sewers in the low-income housing estates.

With waterborne sewerage the following systems are possible:

a. Individual plot connections connected to town sewerage.
b. Individual plot connections connected to communal septic tanks on public land.
c. Individual plot connections connected to individual septic tanks on private land.
d. Communal blocks connected to town sewerage.
e. Communal blocks connected to septic tanks on public land.

Communal sanitary facilities or toilet facilities not on the plot are regarded as an unsatisfactory solution. If possible these solutions should be avoided by all means.

Septic tanks

Septic tanks are rectangular chambers, usually sited just below ground level. Although digestion of the settled solids is reasonably effective, sludge will accumulate and the tank must be desludged at regular intervals, usually once every 1-5 years. These desluding intervals are difficult for smaller townships to adhere to because they are not in possession of exhauster trucks. Furthermore the disposal of sludge leaves a lot to be desired. Often the sludge, which is highly offensive and dangerous, is disposed off in bushes in the rural areas or on surface land. To partly overcome this problem, it is recommended to design septic tanks for long emptying intervals, say 10 years. Calculations should be based on sludge accumulation of 0,04 m^3/person per

year. A septic tank should receive the waste of not more than 300 persons.

The effluent from septic tanks is from a health point of view, as dangerous as raw sewage and therefore is ordinarily discharged to seepage pits or drainage fields. It should not be discharged to surface waters without further treatment. Soils should be sufficient permeable to accommodate these effluent flows. In addition the life of a drainage field is limited. Land should be set aside for use as a future replacement drainfield. The rate of infiltration in permeable soils can be taken as 10 litres $/m^2$ side wall area per day.

The drainage field requirements limit the responsible use of individual septic tanks to low density urban areas.(upto 200 pers/ha.). While communal septic tanks by locating them under the communal playgrounds can be used at slightly higher densities. Furthermore, septic tanks should be located on such a way that they can be emptied by an exhauster truck.

4.0 DRY DISPOSAL SYSTEMS

Conventional pit latrines are the most common sanitation facility used in Kenya. These form of pits have two major disadvantages: it usually smells, and flies or mosquitoes readily breed in it. Particularly when the pit is filled up or wet. However, it is often the only possible sanitation solution to build by self-help methods. These undesirable attributes have led to the rejection of pitlatrines in favour for other, far more expensive forms of sanitation. But these major disadvantages of smells and flies are almost completely absent in improved versions, which will be discussed later.

In many parts of Kenya pitlatrines have become grossly fouled and often constitute a greater health risk than promiscuous defaecation in the garden or alleys. This is not because of any inherent tendency of pitlatrines to become fouled, but because they have often been introduced without sufficient user participation or education into communities which had never previously had any sanitation facility whatsoever. In such communities, other types of latrines would doubtless be equally fouled.

This problem has been increased by the inherent tendency to develop a pit latrine with the cheapest materials available. These materials are difficult to clean or to maintain in an attractive appearance. Insufficient attention is frequently given to this aspect of sanitation from a health point of view. Assuming a suitable sanitation choice has been made that disposes of and treats human excreta without pathogen risk in the process, the remaining disease transmission risk at the household level is focused on human contact with the toilet immediately before, during and immediately after defaecation or urination i.e. in or around the toilet structure.

The following principles should be followed however:

- light should be admitted from the highest points in the wall.
- ventilation should be provided, this can be achieved via the day light provision.
- to prevent rodent access, no openings should be left near the floor, doors should be flush fitting.
- floors should be easily to clean with water. Earth or wooden floors should not be permitted.
- walls to a level of 1 meter above floor level should be easy to clean with water. If concrete is employed it should be given the smoothest possible finish or, if possible, coated with an alkali-resistant gloss paint.
- floors should slope slightly towards the squatting plate hole so that the removal of water used to wash the floors can be easily disposed of. Under no circumstances should it be made more convenient to sweep this fouled water outside on to the ground and to prevent this/a small step at the base of the door should be incorporated.
- the squatting plate should preferably one integral part of the floor, so as to remove the probability of joins accumulating dirt and pathogens. Where this is not possible, squatting plates should be depressed slightly below the floor level and joined securely.
- the opening in the plate should be about 400 mm long and 200 mm wide to prevent children falling into the pit.
- foot rests should be provided as an integral part of the squatting plate and properly located.
- the free distance from the back wall of the superstructure to the opening in the squatting plate should be in the range of 100-200 mm.

It is obvious why there is such a bias against a pitlatrine. Pit latrines as built and used in Kenya hardly can fulfill any of the above mentioned design criteria.

It is therefore recommended that the unimproved pitlatrines of the types as traditionally built in Kenya should no longer be built. If possible those ones which are in existence should be converted into a ventilated improved pit latrine or in ventilated permanent alternating pit system.

Ventilated pitlatrines are relatively easy to build on a self-help basis. It is probably the only sanitation technology available where the plot allottee can actually build for himself a safe excreta disposal facility. The municipal authorities, the Public Health Officer, are generally only required to supervise their design and construction. It is therefore recommended not to install these type of toilets by a contractor. The municipality should set up a small building yard, may be attached to a local craft center, where squatting plates of an approved design are manufactured. If these squatting plates and other necessary items such as a vent pipe and non-corrosive fly screens are sold for a nominal charge by the council or a licensed individual, benefits of this project will not stop when the contractor has disappeared from the site. The option is than open for the Council authorities to reconvert all existing pitlatrines into the improved pitlatrines. The benefits of this small project will then have a far reaching effect in the location.

Provided the squatting plate is kept clean, therefore the plate should be made out of a durable smooth finish material, this type of latrines poses a health risk to the user scarcely greater than does a flush toilet. The only slightly increased risk is that of fly and mosquito breeding. However this is most unlikely to result as a serious nuisance if the latrine is kept clean, fly breeding inhibitors are used, the ventilation system is properly designed and the users keep the slab's hole covered.

The main advantages of a well maintained ventilated improved pit-latrine or a ventilated permanent alternating pit are:

1. lowest annual costs
2. ease of construction and maintenance (self help possible)

3. no imported components
4. all types of anal cleansing materials may be used
5. absence of odor nuisance and minimal fly and mosquito nuisance
6. water shortages do not make the system inoperative
7. low level of municipal involvement
8. minimal risks to health
9. good potential for upgrading
10. environmentally sound

These type of toilets are, however, unsuitable for high density areas, they may pollute ground water with high water tables. Furthermore, they require that separate arrangements for sullage disposal be made.

5.0 THE VENTILATED IMPROVED PIT LATRINES (VIP)

Recent work has provided designs for pit latrines that are odorless and have minimal fly and mosquito nuisance. These newer form of pit latrines are a hygienic,low-cost and indeed a sophisticated form of sanitation, which has only minimal requirements for user care and municipal involvement. The pit is slightly offset to make room for an external ventpipe. The ventpipe should be at least 100 mm in diameter, it should be painted black and located on the sunny side of the latrine thus facing the equator. If this is not possible the ventpipe should extend at least 60 cm above the roof.

The air inside the ventpipe will thus heat up and so create an updraft with a corresponding downdraft through the squatting plate. Thus any odors emanating from the pit contents are exhausted via the ventpipe, leaving the superstructure odorfree.

This pit ventilation has also an important role in reducing fly and mosquito breeding. The draft discourages adult flies and mosquitoes from entering and laying eggs. Nevertheless, some eggs will be laid and eventually adults will emerge. If the vent pipe is large enough to let light into the pit, the adults will try to escape via the ventpipe. However, the ventpipe is covered by a gauze screen so that the flies are prevented from escaping and they eventually die from dehydration and fall back in the pit. The ventpipe and the gauze screen must be made from corrosion resistant materials, such as asbestos cement, PVC etc.

These ventilated improved pit latrines do not have water requirements. A pitlatrine should be designed for a minimum lifetime of 5 years and preferably for as long as 10 years. For the purpose of design the required capacity of a dry pit should be taken as 0.08 m^3 per person per year. It is advisable to locate the latrine in a separate structure from the house, however, the distance as originally required by the Building Bylaws, 9 metres from a habitable room, can be reduced to 3 metres.

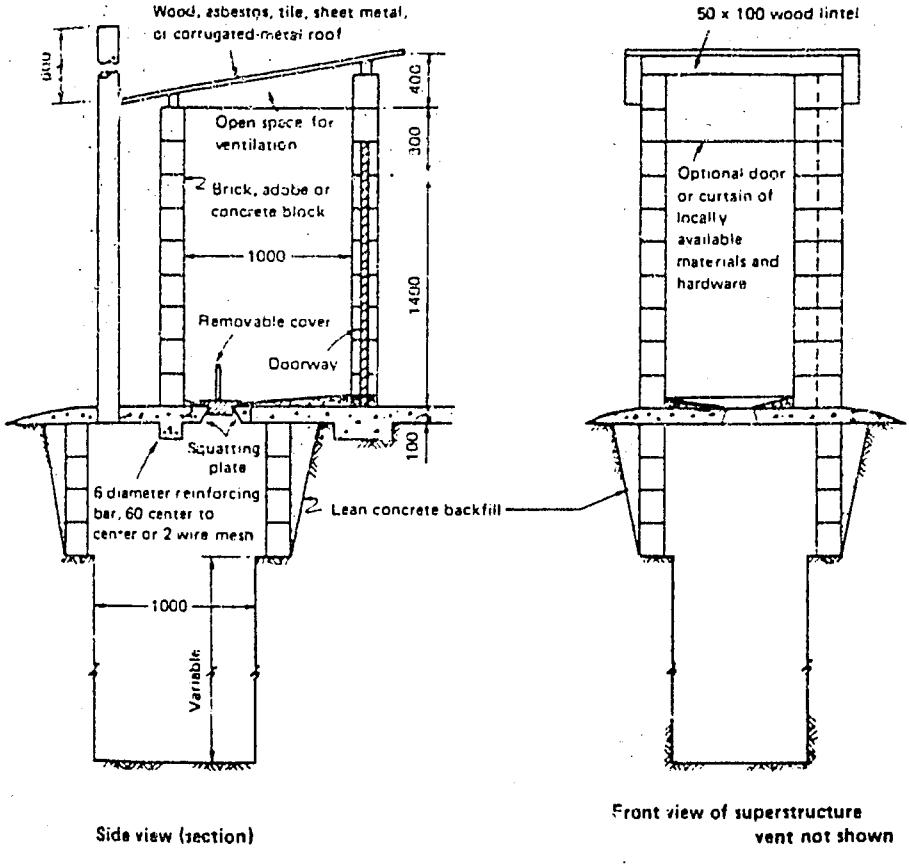

Design of a Ventilated Improved Pit Latrine.

6.0 THE VENTILATED PERMANENT ALTERNATING PIT (VPAP)

To eliminate the need to construct deep pits, to preclude the necessity of constructing another latrine once the pit is full and to facilitate the emptying of the pit where space for a replacement pit does not exist, a dual pit latrine should be used. This is a slight modification of the ventilated improved pitlatrine. Two pits can be provided by constructing a separation wall in the VIP. Each pit should be designed to have an operating life of at least two years, before having to seal the pit and switch to the second pit. One pit would be used until full and then sealed while the second pit is in use. At the time the latter is almost full, the first pit would be emptied and put back into use once the second pit is completely filled. The ultimate use of the two pits can be used indefinitely.

Due to the long residence time of the decomposing excreta in the pit not in use at the time (a minimu of one year), pathogenic organism will have been destroyed by the time the pit needs to be emptied. As a consequence, there is no danger of spreading pathogens and the excavated humus-like material can be used as a soil conditioner or disposed of without any fear of pathogenic contamination with the related health hazards.

To achieve this performance, two design features are essential. Pits should be built with a horizontal cross-sectional area, and should be covered with well-constructed moveable slabs to facilitate access and digging out.

The floor mountings receiving the squatting plate must be identical for both pits. Two plates are required, only one of which is an actual squatting plate. The other is simply a slab of the same external dimension without the squatting plate hole. This is to ensure that only one pit is used until it is full. After the digging out operation the two plates are exchanged.

This digging out operation should not necessarily be carried out by the owner occupier himself. In this section there is considerable scope for local entrepeneurs, who could resell the fertiliser to farmers. Dried sludge from sewage plants has a commercial value in Kenya, for example, the dried sludge from the Nairobi Sewage Treatment Works is put up for tender.

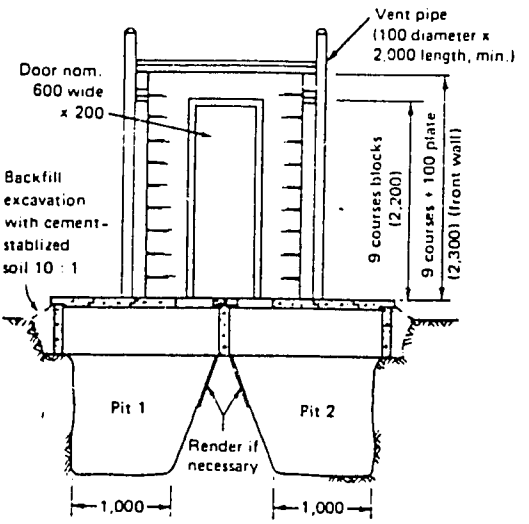

Design of a Ventilated Permanent Alternating Pit.

A Ventilated Permanent Alternating Pit with one superstructure which give access to the two pits.The vent pipes are constructed out of standard UPVC components.Fly screens are not installed yet.

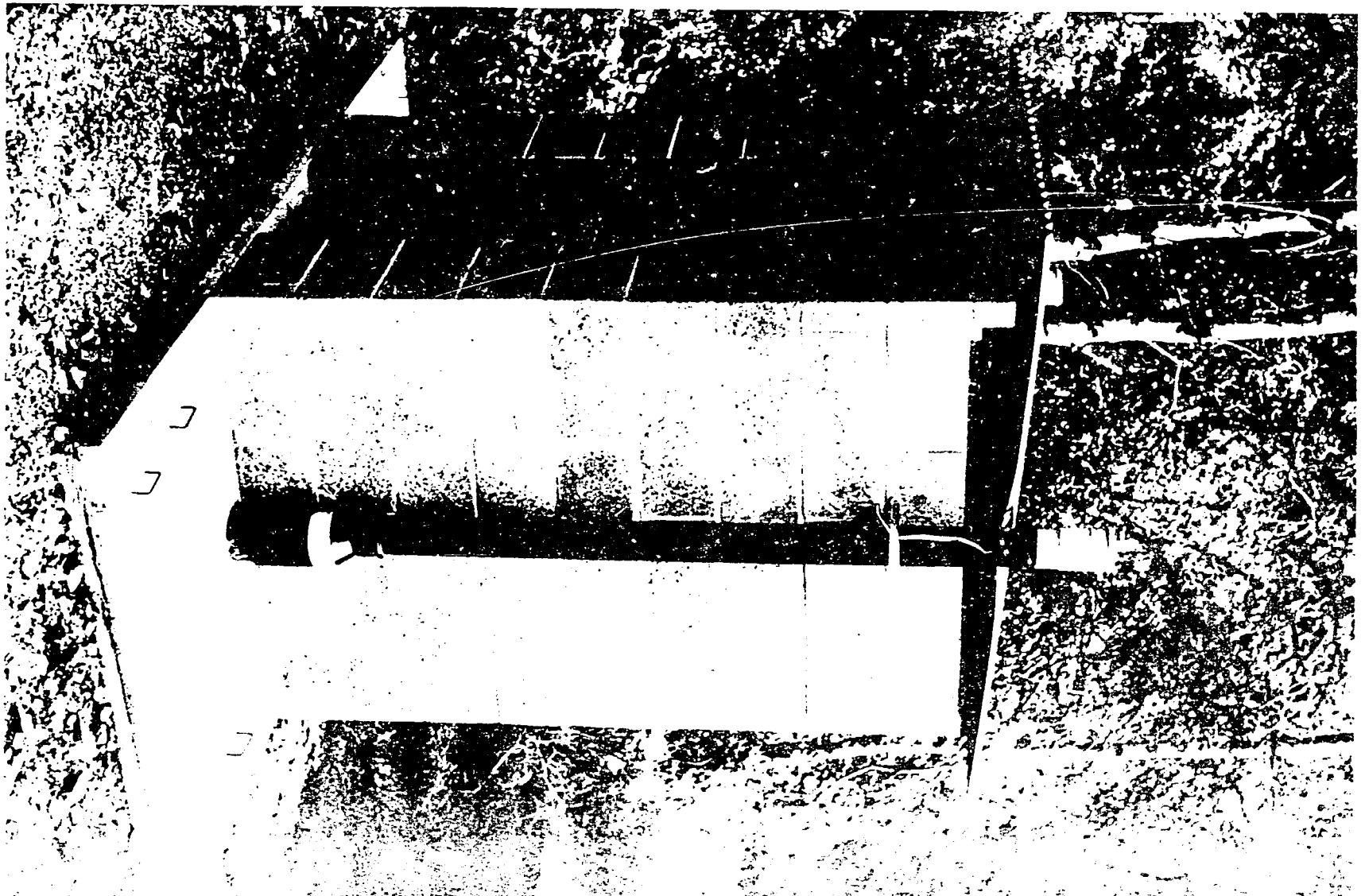

7.0 POUR FLUSH TOILETS

These squatting pans are designed such that approximately 1-2 litres of water are poured in by hand to flush the contents out of the pan. This type of toilet may be installed inside the house. This type of pour-flush pan is often used in Asia together with wet pits as the water seal prevents odor development and mosquito breeding. They are especially suitable for those societies where water is used for anal cleansing.

Another type of pour flush toilet, which is widely used in India, Asia and Latin-America is the pour flush pan in combination with a completely offset pit. The pit is essentially a wet pit provided with a concrete or ferro-cement cover slab. When the pit is full with sludge or the inflow (which is only six litres per capita per day), exceeds infiltration capacities a second pit is dug and the toilet connected to it. The contents of the first pit will dry out and after a period of one year the contents may be safely dug out by manual labour. The side walls of the pit which were clogged with fine particles will regain its former infiltration capacity. However, if waste water flows exceeds the absorbative capacity of the soil,in for example black cotton soils, the effluent of the pit should be disposed of in sewers and treated in oxidation ponds.

Sullage water should be disposed of in a separate soakage pit. The two pits can be interconnected by a T junction, the invert of which is a nominal 3 cm above the invert of the exit pipe of the soakage pit which is connected to the sewer.

Since all but the smallest solids are retained in the pits it is not necessary to ensure self-cleansing velocities of 1 metre/sec in the receiving sewers. Also sewer sizes can be reduced to 100 mm because the effluent carries no solids. These sewers should be made out of UPVC or polyethylene. The number of manholes can be reduced and can be substituted for by using rodding eyes in these sewer lines to enable sewer maintenance. Thus the sewered pour flush system achieves considerable economies in pipe and excavation costs as compared to a conventional sewerage system.

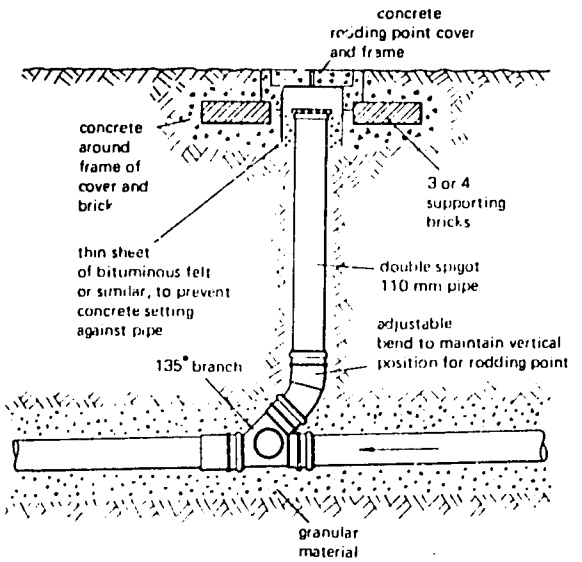

Rodding point in a UPVC sewer

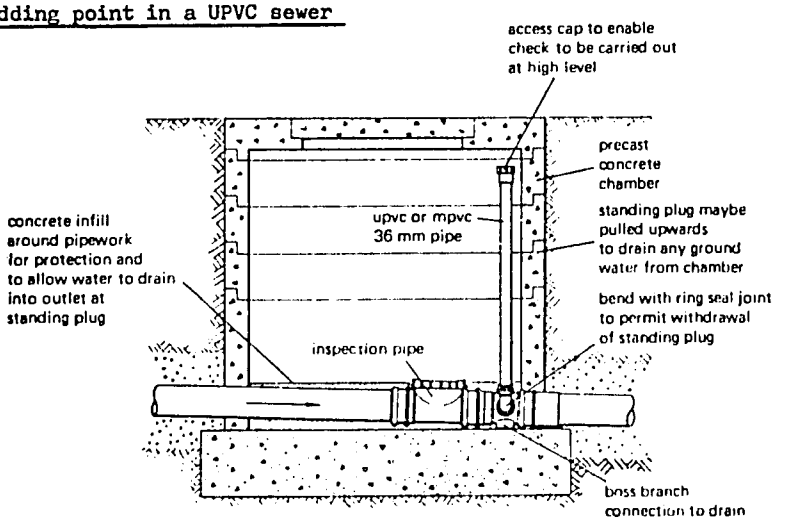

Sealed access manhole in a UPVC sewer

The squatting pan can be made of several different materials. Reinforced concrete, ferro cement and sulphur are usually the cheapest and could be made in local craft centres. However, a moulded pan made out of high density polyethelene is available for approximately K.Shs.70/- in Kenya. These pans are manufactured in large quantities in Malaysia. Cost and aesthetics are the important criteria as well as strength and rigidity. A variety of finishes can be applied to concrete or ferro cement squatting plates (for example alkali resistant gloss paint and polished marble chippings) or the concrete itself can be coloured. Aesthetics are often extremely important and should not be ignored by engineers.

Pour flush toilets have the following advantages:

1. a possible location within the house
2. no odour or the possibility of fly and mosquito breeding
3. minimal risks to health
4. low level of municipal involvement
5. low annual costs
6. ease of construction and maintenance
7. very good potential for upgrading

The main disadvantages are:

1. Pour flush toilets should be built only on permeable soils and when soils are insufficiently permeable a small bore sewer should be installed immediately

2. the toilets do not accept large bulky items such as corn cobs etc. so that user cooperation and instruction is required in areas where these type of materials are commonly used.

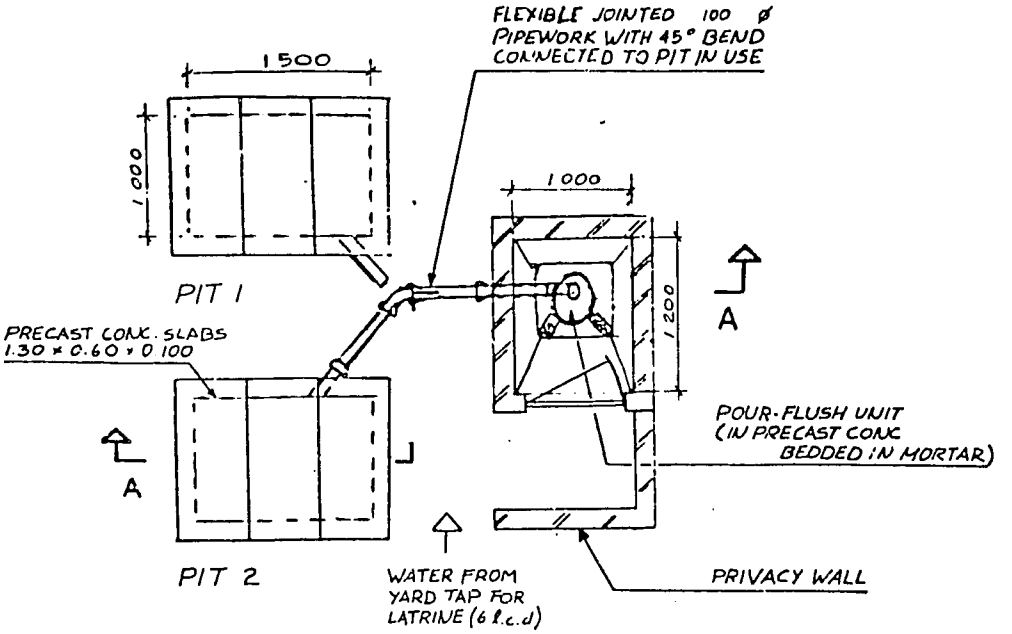

PLAN

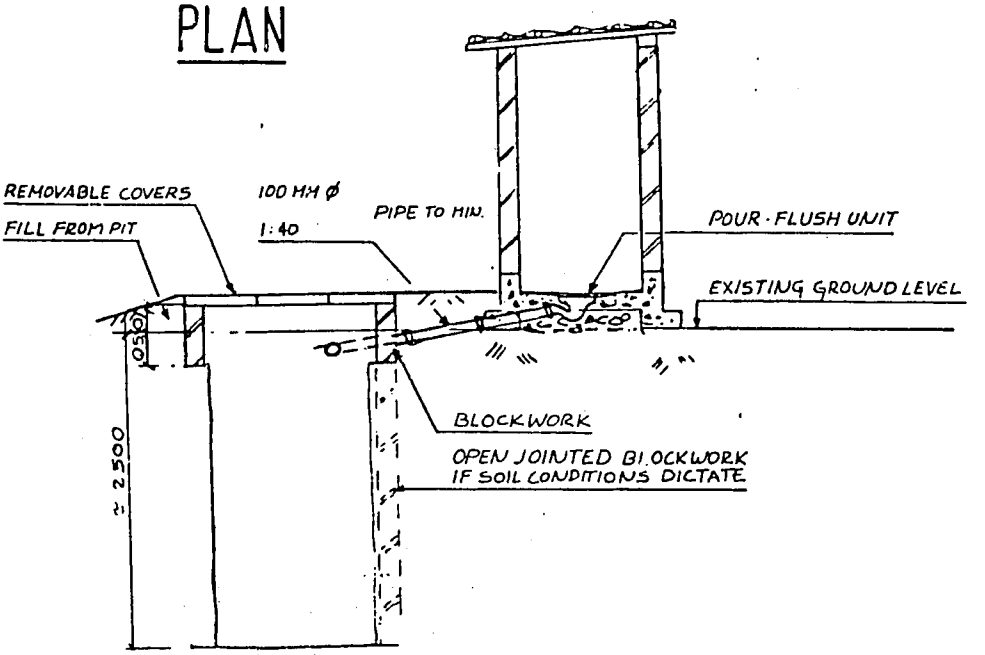

SECTION AA

Sketch design for pour-flush toilet on alternating pits.

8.0 WATER SUPPLY

Generally, water supply figures for new housing areas will be based on a per capita daily consumption figure of 75 litres if water-borne sewerage is provided.

In squatter areas where people can only be served by communal water points or kiosks, water consumption should be based on 25 litres per person per day. However, surveys in low income housing estates reveal that actual water consumption per head is very low (often below 15 litres per person per day). This amount is too small to maintain personal cleanliness.

This low water consumption results from two main reasons:

1. inconvenience; people have to walk long distances or have to wait a long time at the kiosks.
2. people pay excessive prices for water. A price of K.Shs.- cents 20 for a debe of water (18 litres) amounts to K.Shs.11/- per 1000 litres compared with somebody with on-house services who pays only about K.Shs.2/- per 1000 litres.

The following recommendations are therefore made:

1. If water kiosks are deemed to be necessary,the max walking distance to the kiosks should not be more than 100 metres.
2. The kiosk should be equipped with a proper soakaway arrangement so that wasted water is properly disposed of.
3. The selling price of water should be strictly controlled. If cross-subsidy is to take place to the poorer members of a particular community, it can probably be applied safely in this field. For example people with on house connections should pay more than those who are served by water kiosks, the latter should normally pay only a nominal charge to the water kiosk operator say 5 cents per debe.

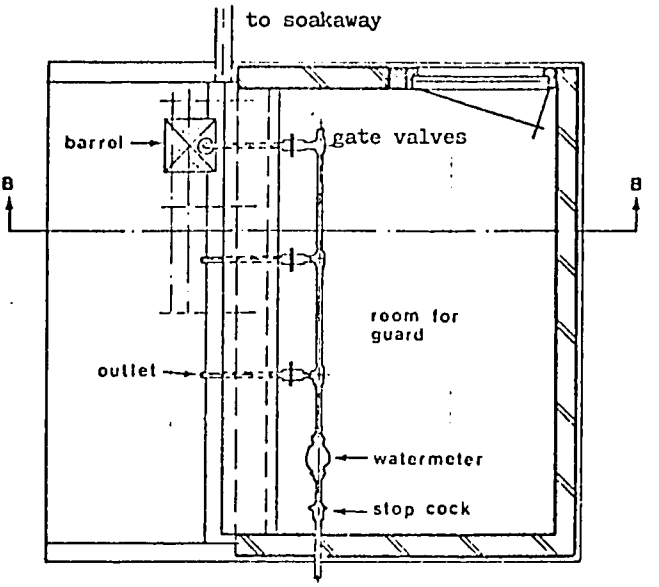

CROSS SECTION A–A

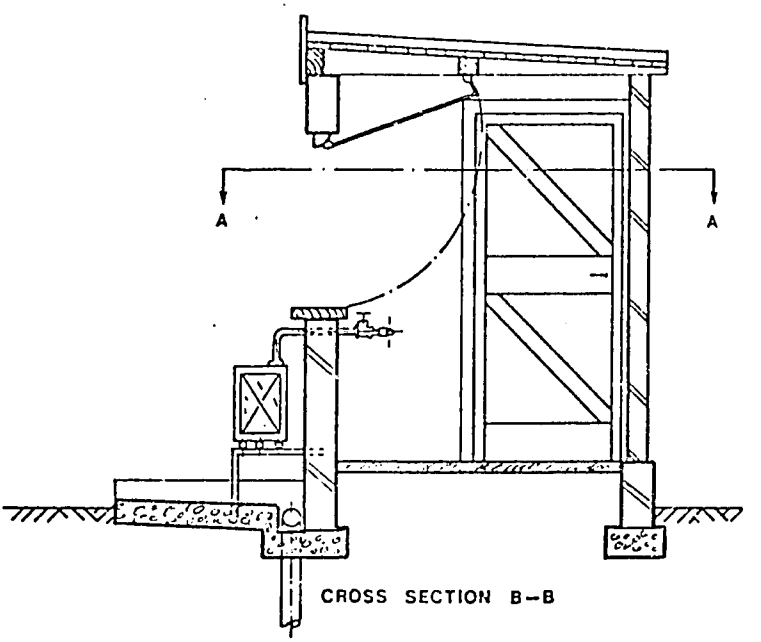

CROSS SECTION B–B

Design for a water kiosk

From a health point of view house connections are to be preferred. Particularly when on site dry excreta disposal systems such as the ventilated improved pitlatrine or the pour-flush toilet are used there is a scope for a more appropriate water distribution system based on the provision of a tap placed in the court yard.

An individual tap system eliminates water carrying from outside the household, and it facilitates cleanliness in water use. Providing piped water to low income users by means of a single tap service, raises two problems: wasteful use and the collection of water rates.

Generally, the installation of metered water connections leads to decreased use either from leakages of fittings or waste of water. It is, however, uneconomical to install individual water metres since the price of a water meter may be more than the payment for the yearly amount of water.

Metering of individual water connections has the following advantages:-

- Reduction of waste and misuse of water.
- Provision of a "fair" means of payment, the consumer pays only for the water he uses.
- Possibilities of monitoring leakage and losses in distribution mains.

Disadvantages:

- Meters are expensive to install and need maintenance.
- Monthly reading, billing and accounting is expensive.
- It is difficult to collect water charges, because owners in low income areas do not have postal office boxes and may not be able to read bills.
- Disputes can arise over the accuracy of the meters.

Metering houses with single tap services which are not connected to waterborne sewerage has repeatedly shown to be costly and some type of flat rate system may be necessary.

A flat rate is charged without regard to the amount of water actually used by the consumer. Without meters and individual billing, however, the consumer will not normally take any action to prevent waste. With unmetered service there will be no incentive to repair leaking taps that can easily waste 10 litres of water per minute or 14 m^3 of water per day. Excessive run-off can result in stagnant pools, where insects and flies breed.

A positive effect of an automatic self-closing tap is that almost every person uses almost the same amount of water. Observations in other countries show that a certain level of water withdrawal is reached with automatic self-closing taps, whether a water meter is used or not.

The water consumption will be between 25-40 litres per person per day. Therefore, it is easy to establish flat rates for water. With flat rates it is possible to include the water charges in land rents or a general tax revenue. The collection of these combined rates should take place by one central body, for example a Housing Development Department. Preferably the water charges should not be directly connected with the water service since disconnection of the water supply is not a sound way of enforcing payment.

A single water meter measures the water delivered into a particular portion of the system to check for leakages or unauthorised connections. Together with the water meter, a gate valve is placed at the beginning of the service line. See illustration.

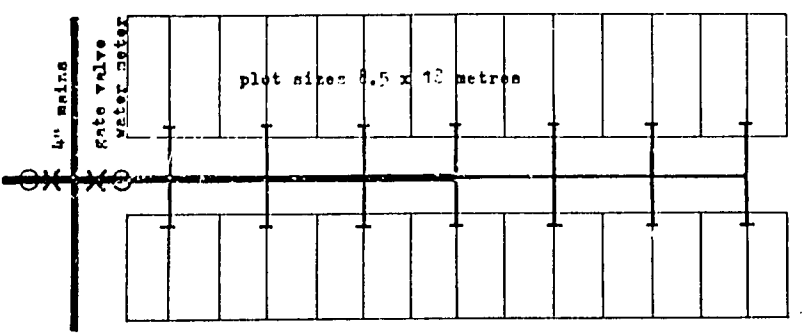

A weak point in the distribution of water to low income consumers has always been the water tap. Various types of taps for dispensing water are presently in use. Generally, these valves represent a cross section of the equipment used in developed countries. These taps are subjected to extremely intensive use. The majority of taps presently used are made from brass, bronze or other metals. Typically, such valves include rubber or neoprene washers, springs and other components. If water is unmetered, users lack the incentive to turn off the tap.

A water tap has been developed by an American firm to deal with precisely these problems. The Fordilla valve is rugged and dependable, but is mechanically complicated and expensive. Ideally such taps should be self-closing, should not have any significant parts which wear out under intensive use, and should have components which have low monetary value thus reducing the risk of pilferage, and last but not least, the tap should be inexpensive.

USAID has undertaken a study on this subject and extensive tests have been done on a proposed tap namely the ROBO valve. This tap is constructed entirely of P.V.C. and can be produced by the injection molding process. This type of technology is available in Kenya.

To activate or open the valve, the user simply depresses the button/ float valve. As soon as the applied downward force on the button exceeds the upward force on the bottom of the float valve, the valve moves vertically downwards allowing water to flow around the floatvalve, along the outflow part and out through the exit nozzle. As long as the consumer maintains a light pressure on the button, the valve will remain open. When the consumer removes his hand, the button is released and the waterflow line pressure firmly raises the float valve to return once again into its seat. The absence of springs, levers, or any other wearning parts, makes this valve a very attractive one. It should be noted that as the float valve or the seat assembly wears, its sealing characteristics improve because the valve is wedged further into the valve seat. The cost of this tap is estimated to be approximately US$2,-.

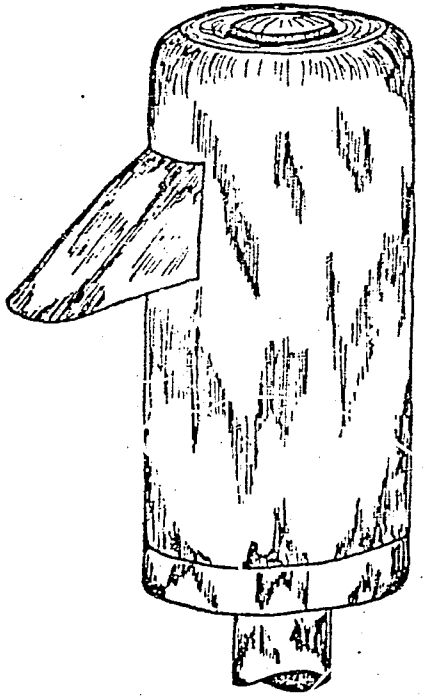

PRIVATE HOUSEHOLD OR YARD
CONNECTION ROBOVALVE

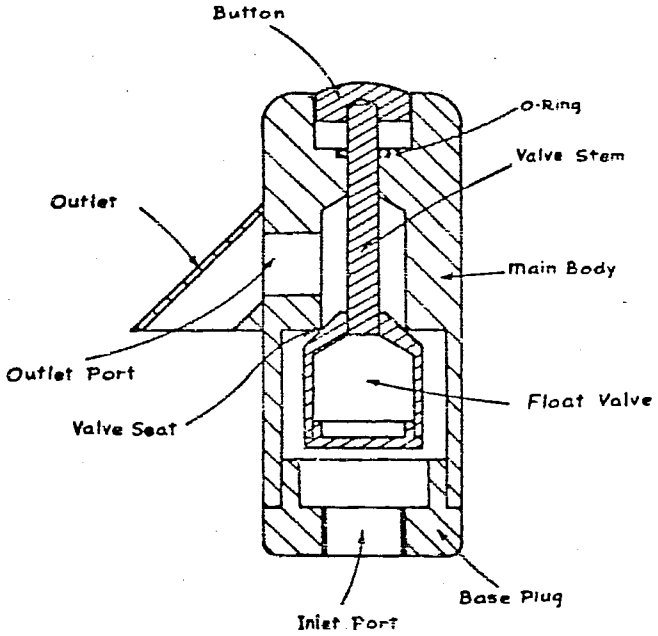

CROSS SECTION OF PRIVATE HOUSEHOLD
ROBOVALVE

9.0 WATER STORAGE

In the foregoing pages water storage is not included in the cost estimates. However, some considerations should be given to this point. Water storage is needed in the case where there is a possibility of temporary water shortages. It is considered that a one-day water supply is sufficient for this purpose. Water storage can be done in roof tanks in every individual house or, alternatively, bulk storage should be provided. At present individual storage is generally preferred. Particularly if conventional sewerage is used, sufficient water should be stored (at least on eaves level) to facilitate toilet flushing. Insufficient water storage will turn the flush toilet into a health hazard during water shortages.

For the core house an occupancy is assumed of 10 persons per plot. This results in a water storage requirement of around 10 x 60 litres = 600 litres. However, in practice it appears to be very difficult and costly to install this amount of water in rooftanks. The weight of this water can make certain structural modifications necessary, and it is doubtful if low cost structures can absorb this load. Furthermore, the system requires double plumbing.

Observations in site and services schemes show that individual water storage is often omitted or where it is installed, is too small to be effective. The cost of storing 600 litres of water in rooftanks including additional plumbing is about K.Shs.1,000/- per plot.

In contrast to conventional sewerage, however, the alternative sanitation systems have very low water requirements. Only the pour flush toilet needs a small amount of flushing water. The VIP and VPAP toilets have no water requirements. In these cases, therefore, water is needed only for cooking and personal hygiene.

Consequently, in emergencies, only small quantities of water are necessary. As a result water storage can now be in bulk, within walking distance of the houses. In emergencies people will be able to carry water in buckets or containers to their houses. Observations show that if water is carried by hand, consumption is likely to drop to 10-15 litres per person per day. A storage of 20 litres/per person per day is therefore assumed to be adequate. A 9000 litre covered galvanised iron tank placed on a simple concrete foundation will cost about K.Shs.4,000/-. It can provide 400 persons with 20 litres of water. This will be a cheap solution and satisfy all basic health needs in emergencies.

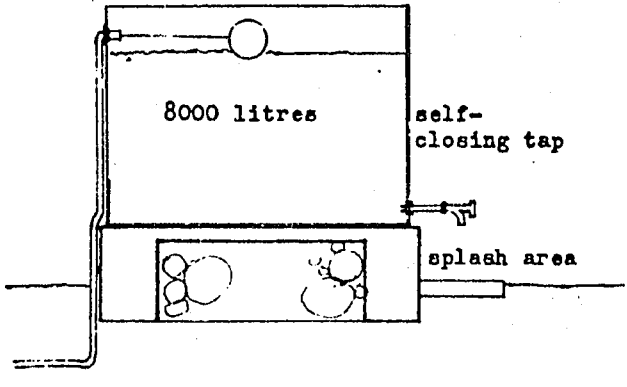

Communal water storage tank.

10.0 FIRE REQUIREMENTS

Fire fighting in Kenya has a very low status. Fire trucks are mainly confined to the bigger towns, whilst the smaller urban centers rarely have any fire fighting equipment. What equipment exists is often out of order due to lack of spare parts.

There is nowadays a tendency to adopt the rule that every house in a housing scheme should be located within 100 metres of a fire hydrant. This fire hydrant should be located on a 4" looped water-main.

Given that low-cost housing is only single or occasionally two-storey, then for fire purposes, such water mains are highly over designed. This is imposing unnecessary costs for low-income housing estates. Furthermore, observations show that in fact numerous higher-income housing estates in Kenya do not have 4" water mains. This "standard" solution can, therefore, be seriously questioned for low income estates. Of course, even over designed water mains will be ineffective when the supporting equipment is not available. Other methods for fire fighting in low income housing estates should therefore be developed.

An alternative to having people waiting helplessly for the fire truck to arrive (assuming they have been able to find a working public call box from which to request the fire service) is to provide the community with the tools with which they can effectively fight a fire. A fire always start small and quick action can therefore be most important.

It has been suggested in the Kenya Building Bylaws Study, that a "barefoot" sanitary technician should be employed by the council to deal with sanitation problems in the community. It is suggested here that this concept can be extended to cover fire fighting. The tasks of this technician, who lives in the housing estate will be:

- to maintain a close liaison with council officials
- to control and maintain watertaps
- to check toilet facilities for malfunctions on a regular basis
- to clear blockages in sewers
- to advise people on health related subjects
- to control refuse collection
- to fight fires in the estate and to perform preventive fire services.

It is anticipated that one technician will be employed for every 500 persons living in an estate. This "barefoot" sanitary technician should preferably be a woman who can relate well to the other women in the neighbourhood. She should receive a basic training in fire fighting and should be equipped with basic tools to fight fires. Therefore on the water supply laterals, gate valves with quick release connectors should be placed at regular distances. In addition every technician should be provided with two hoses each of 30 metres of 1½", fire axes and shovels.

Furthermore, the water storage tanks, as used in the alternative sanitation systems, can be integrated for fire fighting purposes. If the tanks are placed in strategic locations they can supplement the water obtained directly from the mains.

A portable pump mounted on a handcart would be located inside a housing scheme under the control of the technician.

Houses in core housing schemes are mostly single storey dwellings, hence they do not need high pressure water to reach the roofs. In the plot layout, wayleaves of 5 metres are provided between the houses.

Furthermore, the houses are mostly built out of permanent materials and roofs are normally galvanised iron sheets, which gives a good fire resistance.

If appropriate tools are provided to the community it would be possible to fight fires far more effectively than at present.

A combined water storage firefighting system is estimated to cost for a small low-income housing estate:

2 hoses 30 metres each with quick connectors	K.Shs.	1,000.00
10 Gate valves, 1½"	K.Shs.	1,000.00
Water storage tanks 9000 litres 2 x KShs.* 4,000/-	K.Shs.	8,000.00
Portable pump mounted on handcart, axes, shovels		12,000.00
Total	K.Shs.	22,000.00

*The cost of water storage tanks is already included in the individual sanitation costing exercises.

11.0 COSTING OF SANITATION POSSIBILITIES

These costings are based on contractor prices for 1980. In addition a mark-up of 10% has been allowed for to cover the additional overheads which will be necessary to cover the costs in these smaller towns.

A cost comparison has only been made for the core housing units and is based on a plot frontage of 8,5 meters with a total plot area of 150 m^2. When sewers are calculated for these calculations are based on the assumption that these services are located in the back of the plots i.e. back to back services.

It is assumed that the necessary land acquisition, site, survey, roads and surface water drains, landscaping and site clearance, water supply security lighting, professional design fees and supervision to cost K.Shs.9,000/- per plot. (150 m^2).

For cost comparison reasons, all the sanitation options are considered to be contractor built and this includes the provision of the super structure of the toilet. In practice self-help in building these sanitation alternatives is highly recommended. The contractor on the site could for example supply only prefabricated reinforced concrete slabs and squatting plates and/or vent pipes. The construction of the sanitation alternatives is simple and straight forward and needs only low skills and consists mainly of digging proper pits for soakaway and excreta disposal purposes. Hence considerable cost savings in the building of these sanitation alternatives can be achieved.

Core housing is based on the assumption that plot occupancy will gradually increase and that it will take some years before the housing scheme reaches its designed density. However, sewers which are designed for the ultimate density and flow are in the sewerage solution already in place before the first occupants arrive on the scheme. Investments which are only fully utilised after, for example, 10 years are very wasteful from an economic point of view.

Infrastructure costs for a plot of 150 m^2.

SERVICE OPTION	COST OF SANITATION	GENERAL SERVICES	TOTAL COST	MONTHLY ADDITIONAL CHARGES
On plot water with waterborne sewrage ,trunk sewer available	kshs 6.310 +	kshs 9.000 =	kshs 15.310	kshs 58,-
On plot water with waterborne sewerage on communal septic tanks	kshs10.650 +	kshs 9.000 =	kshs 19.650	kshs 37,-
On plot water with pour-flush toilet,maunal flush and soakage pit	kshs 3.270 +	kshs 9.000=	kshs 12.270	kshs 9,-
On plot water with pour-flush toilet,cistern flush and soakage pit	kshs 5.550 +	kshs 9.000 =	kshs 14.550	kshs 13,50
On plot water with pour-flush toilet,cistern flush on small-bore UPVC sewer,trunk sewer available	kshs 5.730 +	kshs 9.000 =	kshs 14.730	kshs 31,50
On plot water with ventilated improved pit latrine and sullage soakage	kshs 3.215 +	kshs 9.000 =	kshs 12.215	kshs —
On plot water with ventilated permanent alternating pit and sullage soakage	kshs 4.180 +	kshs 9.000 =	kshs 13.180	kshs —

12.0 SANITATION UPGRADING

If environmental conditions change (increased population densities etc.) thus making the present used technology inappropriate, upgrading of this technology becomes necessary. It should be noted that otherwise upgrading is optional and should only be done if user demand and ability to pay exists for the additional expenses involved.

Both the Ventilated Improved Pitlatrine and the Ventilated Permanent Alternating Pit can be upgraded to flush toilets. The logical sequence is then on to a pour flush toilet. The conversion of a VPAP to a pour flush toilet is very simple and inexpensive; a water-seal squatting plate is installed in place of the squat opening, and the existing displaced pit is used to receive the toilet wastewater. However, depending on the soil conditions it may be necessary to add an additional soakage pit to provide for a greater infiltration area for the toilet flush water.

A VIP can also be readily converted to a pour-flush toilet by filling in the pit with soil and installing the water-seal unit which is connected by a short length of pipe to a newly dug pit. Clearly this is best done when the pit is close to the end of its life, and is most advantageous where the super structure is a permanent one.

In a later stage, or at the same stage, the squatting pans can be upgraded to a low-volume cistern-flush device. It then can become necessary to introduce sewers. The conversion operation is as follows.

1. build a small single chamber tank close to the existing pour-flush pit and discharge all the sullage directly into it. (Minimum volume of 0,5 m^3).

2. connect the existing pour-flush pit to the newly built sullage tank with a 100 mm diameter pipe.

3. connect the sullage tank to the street sewer (the invert of the tank outlet to the sewer should be a nominal 3 cm below that

of the inlet of the pit, so as to prevent sullage flowing into the pour-flush pit.

If the existing pit has sufficient infiltration capacity there will be little or no flow from the pit to the sullage tank. This does not matter. But as the infiltration capacity is exceeded by the inflow, the outflow will increase, and the pit will act as a sealed or semi-sealed first compartment of the two stage septic tank. It is essential at this stage that the sullage tank, which serves as the second compartment of the two stage septic tank is provided so that the sewers do not become blocked.

Since all but the smallest solids are retained in the septic pit, it is no longer necessary to design for large sewer sizes. The number of manholes can also be drastically reduced since maintenance requirements will be low, but if blockages do occur, the lateral sewer can still be rodded by means of rodding eyes, thus allowing a reduction in the number of manholes. Where there are manholes i. this system they should be of the sealed access type to pre 'ent accidental deposit of debris through the manhole into the sewer.

Possible sanitation upgrading sequence(1980 prices)

Year 1980

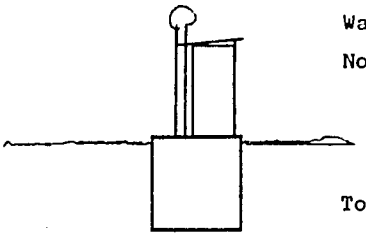

Ventilated Improved Pitlatrine

Water kiosk service

No sullage water arrangements

Total capital investment for sanitation kshs 2.335,-

Year 1990

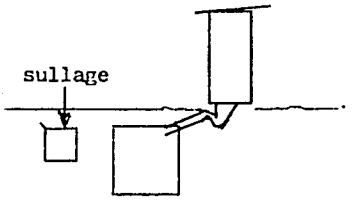

Pour-flush toilet,manual flush

Water service court yard tap

Sullage water arrangements

Additional capital investment	kshs	1.880,-
Additional monthly service charges	kshs	9,-

Year 2000

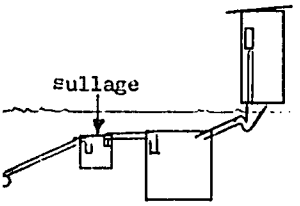

Pour-flush toilet,cistern flush on sewer

Water service court yard tap or in house

Small-bore sewer system to trunk sewer

Cistern-flush

Additional capital investment	kshs	2.460,-
Additional monthly service charges	kshs	22,-

13.0 SANITATION TECHNOLOGY SELECTION

In the previous pages sanitation technologies have been compared on a technical basis. Policy-makers must select from those available technologies the one most appropriate to the needs and resources of the community. The selection should be based on a combination of economic, technical and social criteria, which essentially boils down to the question: which is the cheapest, feasible technology that the users can afford and maintain, and which the local authority is institutionally capable of operating. The critical information for the selection and design of sanitation systems suitable for Kenya's Secondary towns has been provided in this report. A summary is presented in the following tables.

One of the crucial questions is that of water provision. If water is provided by water kiosks only, toilets based on cistern flush are not appropriate and alternative solutions should be considered such as VIP or VPAP latrines. If water is provided to a court yard tap, which is essentially the basic minimum health requirement, pour-flush toilets are feasible but VIP or VPAP latrines can still be used.

Another matter of concern is soil permeability and the level of the ground water table. Soil is considered to be permeable enough when it fulfil: the following criteria: Three 150 mm diameter test holes 0,5 meter deep are filled with water and left overnight so that the soil becomes saturated. Then the following day the same holes are filled to a depth of 300 mm with water. After 30 and 90 minutes the water levels are measured. The soil is considered to be permeable if the level in each hole has dropped 15 mm or more in this period of hour between the two readings.

The ground water table is considered to be high when it is less than 1,5 meter below the surface level.

Criteria for sanitation options

Sanitation options	Level of water service			Soil Permeability		Water table	
	Kiosk	Yardtap	In house	Permeable	Impermeable	Low	High
Waterborne sewerage on trunk sewer	//	//	XX	XX	XX	XX	XX
Waterborne sewerage on communal septic tanks	//	//	XX	XX	//	XX	XX
Pour-flush toilet, manual flush on soakaway	00	XX	00	XX	//	XX	XX
Pour-flush toilet, cistern flush on soakaway	//	00	XX	XX	//	XX	XX
Pour-flush toilet on cistern flush and small bore sewer	//	00	XX	XX	XX	XX	XX
Ventilated Improved Pit Latrine	XX	XX	00	XX	XX	XX	00
Ventilated Permanent Alternating Pit	XX	XX	00	XX	XX	XX	//

XX Technically feasible

// Technically infeasible

00 Technically unlikely or not recommended as first choice.

Scores of reviewed sanitation systems

	COST		HEALTH				OPERATION & CON.						ESTHETIC			ECOLOGY	
Latrine types	Low capital cost	Low operation cost	Hygienic	Fly-free	Rodent-free	Mosquito-free	Easy to operate	Low water need	Easy to maintain	Insensitive to abul.mat.	Local construction mat.	Local construction skills	Odourless	Easy to keep clean	Location inside house	Ecological compatible	Usable end products
Flush toilet on sewerage system	1	3	5	5	1	3	4	1	3	1	1	3	5	5	5	3	2
Flush toilet on septic tank	1	4	5	5	4	2	4	1	3	1	1	3	5	5	5	4	2
Pour-flush toilet on soakage pit	4	5	5	4	4	5	4	4	4	1	1	5	5	5	5	4	4
Conventional pit latrine	5	5	3	1	2	2	5	5	5	5	4	5	2	3	1	4	1
Ventilated pit latrine	4	5	4	3	2	4	5	5	5	5	4	5	4	3	1	4	1
Ventilated Permanent Alternating Pit	4	5	4	3	2	4	3	5	5	5	4	5	4	3	1	5	5

Unweighted scores from 1 to 5, 1= max negative 5= max. positive.

APPENDICES

Detailed costing of sanitation options.

COSTING OF WATERBORNE SEWERAGE, TRUNK SEWER TO SITE

Based on back to back services, 8,5 meter plot frontage.

On plot costs

Inspection chamber		kshs 800,-	
Effluent pipe 110 mm	4 m'	400,-	
Gully trap		180,-	
Foundation slab and excavation		370,-	
Superstructure		800,-	
Toilet pan and cistern		1.100,-	
Water storage tank 600 liters		1.000,-	
Plumbing		300,- +	
Total on plot costs			kshs 4.950,-

On site costs

Concrete sewer 225 mm	4,3 m'	kshs 760,-	
Y branch connection		200,-	
Manhole shared by 10 plots		220,- +	
subtotal		1.380,-	
Allowance 10%	extra off-plot costs	180,- +	
Total on site costs			kshs 1.360,-

Total for waterborne sewerage on available trunk sewer kshs 6.310,-

Additional monthly charges:

Water; 10 persons x 30 days x 30 litres x 0,001 x kshs 3,- =	kshs 27,-
Sewer; 10 persons x 30 days x 70 litres x 0,001 x kshs 1,5	kshs 31,-
Total additional monthly charges	kshs 58,-

COSTING OF COMMUNAL SEPTIC TANK AND SOAKAWAYS

Septic tank design for 100 people(10 plots),10 year desludging intervals.Tanks to be desludged when for 2/3 full.

Design

Sludge accumulation 0,03 m^3/person/year.

Tank size 10x100x 0,03 x 3/2 = 45 m^3 liguid area

5 m^3 air +

Total first chamber	50 m3
second chamber	10 m3

Tank dimensions

First chamber ; deep 2 meter,wide 3,5 meter,length 7 meters

Second chamber; deep r meter,wide 3,5 meter,length 1,5 meter.

Construction cost septic tank

Excavation and disposal	60 m^3	kshs 2.400,-	
Excavation and fill	40 m^3	1.200,-	
Reinforced concrete foundation	5 m^3	6.000,-	
Walling 225 mm	40 m^2	4.800,-	
Walling 150 mm	16 m^2	1.300,-	
Reinforced concrete roof	5 m^3	6.000,-	
Manhole covers	3	1.500,- +	
Total construction cost of septic tank			kshs 23.200,-

Soakaway construction cost

Daily effluent disposal 100 x 60 = 6000 liters.Effective infiltration capacity 10 liters/day/m^2

Ecavation cost and disposal	60 m^3	kshs 2.400,-	
Excavation and fill	75 m^3	2.250,-	
Gravel fill	60 m^3	4.200,-	
Inspection chambers	2	1.600,-	
Drain pipe 100 mm	325 m	9.760,- +	
Total cost soakaways			kshs 20.200,-

Total cost septic tank and soakaway shared by 10 plots 43.400,-

Charge per plot kshs 4.340,-

COSTING OF WATERBORNE SEWERAGE ON COMMUNAL SEPTIC TANKS

Communal septic tank shared by 10 plots.

On plot costs	kshs	4.950
On site costs sewerage		1.360,-
Communal septic tank		4.340,- +
Total costs for waterborne sewerage on septic t.		10.650,-

Additional monthly charges;

Water; 10 persons x 30 days x 30 liters x 0,001 x kshs 3,- = kshs 27,-

Sewer; 10 persons x 30 days x 70 liters x 0,001 x kshs 0,5 = kshs 10,- +

Total additional monthly charges kshs 37,-

COSTING OF VENTILATED IMPROVED PIT LATRINE VIP

Lifetime 10 years, 10 persons

Pit and slab costs

Excavation and disposal	8 m^3	kshs 320,-	
Reinforced concrete	0,45m^3	540,-	
Unreingorced concrete	0,3 m^3	135,-	
Masonry 150mm	3 m^3	240,- +	
Total for pit and slab			kshs 1.235,-

Superstructure

Walling, roofing and door		kshs 800,-	
Ventpipe and flyscreen	2 m'	200,- +	
Total superstructure cost			kshs 1.000,-

Soakaway pit for sullage

Ø 1,5 m, 2 meter deep			
Excavation and disposal	3,5 m^3	kshs 140,-	
Effluent pipe 110 mm	3 m'	300,-	
Reinforced concrete	0,3 m^3	360,-	
Blockwork 150 mm	1 m^2	80,- +	
Total soakaway pit			kshs 880,-

Communal waterstorage facility	kshs 100,-
Total for the ventilated improved pit latrine	kshs 3.215,-

COSTING OF VENTILATED PERMANENT ALTERNATING PIT VPAP

Lifetime 2 year cycle,10 persons.

Pit and slab osts

Excavation and disposal	6 m^3	kshs 240,-	
Reinforced concrete	0,8m^3	960,-	
Unreinforced concrete	0,6m^3	270,-	
Masonry 150mm	6 m^2	480,-	
Plastering	2,5m^2	50,- +	
Total for pit and slab			kshs 2.000,-

Superstructure

Walling,roofing and door		kshs 800,-	
Vent pipes	4 m'	400,- +	
Total superstructure cost			kshs 1.200,-

Soakaway pit for sullage

Ø 1,5 meter,deep 2 meter.

Total soakaway pit	kshs 880,-
Communal waterstorage facility	kshs 100,-
Total for the ventilated permanent alternating pit latrine	kshs 4.180,-

COSTING OF POUR-FLUSH TOILET WITH MANUAL FLUSH.

On plot costs

Foundation slab and excavation		kshs 370,-
Superstructure		800,-
Polyethylene flushing pan		100,-
Effluent pipe 110 mm	3 mm'	300,-
Septic pit excavation	6 m^3	240,-
Reinforced concrete cover	0,3m^3	400,-
Blockwork 150mm		80,-
Soakage pit for sullage		880,-
Communal water storage		100,- =
Total Pour -flush costs manual flush		kshs3.270,-

Additional monthly charges;

Water 10 persons x 30 days x 10 liters x 0,001 x kahs 3,- = kshs 9,-

COSTING OF POUR-FLUSH TOILET WITH LOW VOLUME FLUSH CISTERN ON PIT

This is an upgrading of the manual flush system.

Pour-flush toilet manual flush	kshs 3.270,-
Low volume flush cistern	500,-
Watertank 300 liters	600,-
Extra soakage pit	880,-
Plumbing	300,- +
Total costs pour-flush toilet cistern flush	kshs 5.550,-

Additional charges;

Water; 10 persons x 30 days x 15 liters x 0,001 x kshs 3,- = kshs 13,50

COSTING OF POUR FLUSH TOILET WITH LOW VOLUME FLUSH CISTERN ON SMALL-BORE UPVC SEWERS WITH TRUNK SEWER TO SITE.

On plot costs

Pour-flush toilet manual flus	kshs 3.270	
Low volume flush cistern	500,-	
Water tank 300 liters	600,-	
Plumbing	300,-	
Efflent pipes	400,- +	
Total on plot costs		kshs 5.070,-

On site costs

UPVC sewer 110 mm	4,3 m'	kshs	425,-	
Y branch connection			100,-	
Manhole shared by 20 plots			60,-	
Rodding eye shared by 6 plots			30,- +	
Subtotal			615,-	
Allowance 10% extra on site			60,- +	
Total on site costs				kshs 6660,-
Total pour-flush toilet,cistern flush on sewer				kshs 5.730,-

Additional cmonthly charges;

Water; 10 persons x 30 days x 15 liters x 0,001 x kshs 3,-	=kshs 13,5
Sewer; 10 persons x 30 days x 40 liters x 0,001 x kshs 1,5	=kshs 18,-+
Total additional monthly charges	kshs 31,5