ISN-34343
PN-AAP-835 / 62
5-5-55

VILLAGE DEMONSTRATION OF BIOGAS TECHNOLOGY: AN EGYPTIAN CASE STUDY

M. M. EL HALWAGI, A. M. ABDEL DAYEM AND M. A. HAMAD

Within the context of biogas R & D and demonstration project undertaken by the Egyptian National Resarch Centre, village demonstrations are of paramount importance. In this paper, a case study of a pioneering village demonstration is presented.

Based on a preliminary sociological survey, "Al Manawat" – a traditional Egyptian village was selected for the first demonstration. After a short orientation phase through which the biogas technology was introduced to a group of village representatives, a family was selected to conduct the demonstration experiment. Concomitant with the family energy requirements, availability of digester feed materials, site characteristics and other relevant factors, a family-size unit of a modified Indian type was designed and erected by the side of the farmer's house. The digester effective volume is 9 cu.m. and is connected to both a latrine and animal shed. The unit has been successfully operated since May 1981.

The highlights of the construction stage as well as the unit performance characteristics are discussed. A preliminary techno-economic appraisal is also outlined. Finally, social impacts are assessed.

Initial results indicate that under the Egyptian village conditions, and particularly with the heavily subsidized fuel prices, the high saving in manure transport attained through the introduction of the biogas unit, appears to be the main benefit from the farmer's point of view.

Dans le cadre de la recherche et du développement du gaz de fermentation et d'un projet pilote entrepris par le Centre national de recherche égyptien, les démonstrations faites dans les villages occupent une place prépondérante. Dans cet article, l'auteur présente le cas-type d'une démonstration pilote faite dans un village.

En se basant sur une enquête sociologique préliminaire, "Al Manawat", qui est un village égyptien traditionnel, a été choisi comme lieu de la première démonstration. Après une courte phase d'orientation au cours de laquelle le technologie du gaz de fermentation a été présentée à un groupe de notables du village, on a choisi une famille pour effectuer la démonstration expérimentale. En même temps que l'on étudiait les besoins énergétiques de cette famille, la disponibilité de matières de base de fermentation, les caractéristiques de l'emplacement et tous autres facteurs pertinents, une unité familiale de type indien modifié a été conçue et érigée à côté de la ferme. Le composteur, d'un volume utile de matières premières de 9 m^3, est relié à la fois aux latrines et à l'étable. Cette unité fonctionne avec satisfaction depuis le mois de mai 1981.

L'article met en avant les points essentiels des étapes de la construction et les caractéristiques de rendement de l'unité de fermentation. Il esquisse

Messers. El Halwagi, Abdel Dayem and Hamad are affiliated with the Pilot Plant Laboratory, National Research Centre in Cairo.

une évaluation technico-économique préliminaire et fait l'estimation des retombées sociales.

Les premiers résultats montrent que, dans le cadre du village égyptien et particulièrement du fait que les prix du fuel sont largement subventionnés, les économies importantes réalisées dans le transport du fumier grâce à l'introduction de l'unité de fermentation semblent être, du point de vue du fermier, le bénéfice principal.

Dentro del contexto del proyecto de I & D y demostración realizado por el Centro de Investigación Nacional de Egipto, la demostración en los villorrios es de suma importancia. Este artículo presenta un caso pionero de este tipo.

Basado en encuestas sociológicas, un villorrio tradicional de Egipto, "Al Manawat" fue selectiondo para la primera demostración. Después de una fase corta de orientación en la que se introdujo la tecnologia del biogás a los representantes del villorrio, se seleccionó una familia con cuya colaboración se llevaría a cabo el experimento. Teniendo en cuenta las necesidades de energía de la familia, la disponibilidad de materia prima para el digestor, las caracteristicas del lugar y otros factores importantes, se diseñó y construyó un digestor de tamaño familiar, usando un modelo Indio, al lado de la casa de la familia. El volumen efectivo del digestor es 9 metros cúbicos y está conectado a la letrina y al corral de animales. La unidad está funcionando con éxito desde Mayo de 1981.

Se discuten aspectos de la etapa de construcción y las características de operación. Se hace también una evaluación técnico-económica preliminar. Finalmente se evalúa el impacto social de la experiencia.

Los resultados indican que en las condiciones de los villorrios Egipcios, especialmente en condiciones de precios de combustibles altamente subsidiados, los grandes ahorros en el transporte de abono debido a la introducción del digestor de biogas parece ser el mayor beneficio desde el punto de vista de la familia.

1.0. Introduction

Biomass is foremost amongst the renewable energy resources available to the Egyptian village. Crop residues and dung cakes provide the bulk of the energy used by those who live in the rural areas. The present ways of handling, storing and burning these residues are not only wasteful of energy but are also posers of serious threats to the ecological balance.

Anaerobic digestion of biomass wastes offers a variety of advantages. In addition to converting wastes into useful energy in the form of biogas, it produces a slurry which can be effectively used as a fertilizer. Improved sanitation is another beneficial consequence. Moreover, well-developed rural-type technologies are available and can easily be adapted and implemented using locally available materials and labor.

In 1978 the National Research Centre (NRC) started a national research, development and demonstration programme to assess the viability of biogas technology in rural areas of Egypt. The village demonstration phase which is the central focus of the whole programme was preceded by a multidisciplinary research, development and in-house demonstration phase in order to:

(1) Explore appropriate technologies and gain the required understanding and capabilities so that appropriate designs could be safely presented to village people,

(2) Be reasonably sure that the impacts created by the biogas technology (BGT) on the Egyptian villages would be positive, and

(3) Develop insight and understanding of how to introduce BGT into the villages in a successful manner.

The purpose of the village demonstration phase is to introduce the BGT at the village level using full-scale demonstration units. The programme seeks to identify the points of view of the village people regarding BGT acceptability, applicability and feasibility, as well as to appraise the techno-economic viability of the system.

This paper covers a whole sequence of events, starting with the strategy for selecting the demonstration village and ending with field implementation and initial assessments.

2.0. Basis for Selection of the Demonstration Village

At the outset, criteria for selecting the first demonstration village were set in such a manner as to satisfy two basic requirements:

1. *Replicability*. The village should fairly represent the major type of existing Egyptian villages, which are normally referred to as "the traditional villages."

2. *Accessibility*. In terms of distance and time required to travel, the village should be located in such a way that it could be reached with convenience and regularity by the demonstration project staff.

Three nearby villages meeting the preset criteria were next chosen for the purpose of conducting preliminary sociological surveys. These surveys served as the basis for the final selection of one of the three villages for field demonstration.

3.0. Preliminary Sociological Surveys and Village Selection

The main objectives of these village surveys were:

(1) To collect relevant basic information such as type of soil, irrigation and drainage, predominent crops, animal resources, average family size, type of family housing, form of village cooperative, labor availability, quality and cost of organic waste materials as well as their use and handling, requirements of energy and fertilizers, hygiene conditions and waste handling systems, prospective village development programmes, and so on.

(2) To start a sort of awareness to the project, identify the attitude of people towards accepting the BGT and to probe the farmers' points of view on how to proceed with the demonstration programme.

The sample size in each village was 20 householders representing three landholdings of less than one acre, less than and more than five acres.

Data were collected at three levels. The first was the village level, which provide a holistic, physical and socio-economic village profile. The second was the household level encompassing the selected sample, and the third was a more or less detailed case study on two chosen families.

3

These surveys provided a good deal of useful factual information about the three villages as well as an early partial insight into attitudinal predispositions regarding the acceptability of biogas experimentation. Analysing this information and guided by preset criteria for village selection. "Al Manawat" was chosen as the demonstration village. Some of the basic relevant information about this village is given in Table I.

TABLE I

Some basic information about "Al Manawat" village (figures are rounded).

Distance from the National Research Centre	15 miles
Total population	10000 persons
Village cultivated area	1700 acres
Landholders	1250
Illiteracy rate	40%
Existing schooling	Primary till secondary
Average family size	6
Average animal ownership/family	3.5
Predominant crops	Maize, wheat, vegetables, clover, dates
Main community facilities	Agriculture, veterinary and medical units

4.0. Village Orientation and Demonstration Site Selection

Prior to the physical demonstration proper, a preparatory phase was essential. Preliminary contacts were made with village leaders for the purpose of starting active working ties. Several meetings were organized with the village residents. These meetings served at least two purposes. The first was to spread awareness and arouse interest among the villagers in BGT. The second was to provide the project demonstration team with the basic understanding of the village life, its patterns, customs and influence structure. In addition, informal personal contacts were developed. As a result, much about the fabric of life and village inner setting was unveiled. Posters, films, and simple models of biogas digesters were utilized during this phase to explain, in a simple yet factual way, the various facets of the BGT. Emphasis was not only focused on its merits, but also on its constraints and possible liabilities.

When it came to the actual selection of the first family demonstration site, troubles started to erupt. On account of the village social structure, as is usually the case in most Egyptian villages, various factions exist. In Al Manawat, there are four main families which dominate and among which conflict, feud and competition frequently take place. It was thus mandatory to contact the four family leaders to explore their reaction. Each insisted that a family representative should have a demonstration unit simultaneously, otherwise the consequences would be serious. Careful examination of the four candidates' prospects relating to a successful pilot demonstration indicated that only one of them would be a suitable candidate. Explaining the rationale for proper candidate selection was in no way convincing to the other three. At this point, it was decided to take all four representatives to the National Research Centre demonstration site and continue the discussions around the operating prototype digestors located there. When the various involve-

4

ments pertaining to the construction and operation of the digestors, as they could conceive by seeing it alive, were demonstrated, the three candidates that were deemed unfit started to hesitate. The fourth villager – who is the subject of this case study – was on the other hand even more convinced. The dispute was therefore amicably settled and all the four village factions gave their sanctions to start the first demonstration in the house of the farmer selected by the project team.

5.0. General Description of the Selected Demonstration Household

The first demonstration case, which is the subject of this paper, was selected to represent the average village family household. The chosen farmer is neither from richest top group, nor from the bottom rung of the social, economic or political ladder. Nevertheless, he is a widely respected figure in the whole village.

The farmer Mr. Khamis, is about 50 years old. He is married and supports five persons. These are his wife, a very influential village woman, his son, young daughter, daughter-in-law and an old female relative permanently living with them. Except for the son, who has preparatory schooling, the family members can neither read or write.

The family is completely dependent on agriculture. The father and son cultivate about 5 acres of land by themselves. Three acres are owned by the family and the remaining two acres are rented. Except for half an acre which is just behind the house, the remainder of the landholding is about 500 meters from the family residence. The main crops cultivated are vegetables, maize, and clover.

The farmer owns a two-storey house made of red bricks. The upper floor is still under construction and is meanwhile used as a store. The house floor area is about 240 sq.m., together with a surrounding space area of around 100 sq.m., most of which is located behind the house and which is mostly used as a day shed for the animals. The first floor consists of four rooms. a kitchen, a hall and an animal shed. The whole flooring is mostly compacted natural soil. There is a latrine inside the house which is connected to a private trench for waste disposal. The trench is cleaned once every year by special workers, and the contents are normally added to the manure to be used as fertilizer. Electricity and fresh water are available in the house, though there are frequent power failures and water cut-offs.

The animal shed is a large indoor closed area, about 9 x 6 m. The family owns 4 large cattle (2 cows and 2 water buffalos), 3 calves, a camel, a donkey and two sheep. In addition to the normal household activities (cleaning, washing and cooking), the farmer's wife, her daughter and dauther-in-law are responsible for most work relating to the animals and the shed. They feed the animals, milk the cattle, collect the dung and make the dung cakes.

The animals are only confined in the shed during night, and are taken either to the field or kept outdoors during day time. On account of the shed soil-floor bedding materials had to be used to keep the area dry underneath the animals. Normally, the farmer used to cut soil from his field, move it to the house, and then use it as bedding material in an amount equivalent to about 50 kg/day during summer and 150 kg/day during the winter. This results in the gradual build up of manure which has to be cut

5

every month during winter and every 2 months in the summer season, moved to the field and kept their as a compost heap till used as fertilizer

The kitchen has a small open-fire stove as well as a rural mud-type oven. Both are fired with dung cakes and agricultural residues (maize and okra stalks usually). The oven is used mainly for baking once every week. In addition, there is a kerosene stove used occasionally for cooking, and a portable butane gas burner with small gas bottle which is utilized mainly for making tea.

The family average monthly fuel consumption is about:

40 dung cakes (about 10 kg)	20 000 k.cal × 10% efficiency =	2,000
40 packages of stalks (100 kg)	400 000 k.cal × 10% efficiency =	40,000
20 liters kerosene	180 000 k.cal × 50% efficiency =	90,000
8 kg butagas	100 000 k.cal × 60% efficiency =	60,000
	Total	192,000

which is equivalent to about 42 liters of kerosene per month.

6.0. Biogas Plant Site Selection

The free space behind the house was found to be the most suitable location for the biogas plant. It is large enough to accommodate the digestor, its connections and ancillary facilities for handling the digested effluent materials. The area is exposed and sunny. Moreover, it is directly adjacent to the animal shed, house latrine and kitchen. Besides, there are no drinking water wells in the vicinity, and thus, water pollution hazards are non-existent.

TABLE II

Estimate of feed materials available for digestion

Unit	Daily average/ unit, kg	No. of units	Produced daily, kg	Available[a] daily, kg
(1) *Cattle dung*[b]				
Full-grown buffalo	20	2	40	26.4
Full-grown cow	15	2	30	20.0
Fattening calf	10	4	40	40
Total (1)			110	86.4
(2) *Human excrement*				
Person	0.4	6	2.4	1.7
Total (1) + (2)				88.1

[a] Full-grown animals spend about 8 hours per day outside the shed, thus the amount available for digestion is only 2/3 of the quantity produced. Similary, around 70 per cent of the human excrement is assumed to be available for digestion.

[b] Only cattle dung is used for digestion. In addition to the dung, about 30 kg of urine per day will be available after the design of the animal shed is modified in order to have a sloping concrete floor.

6

7.0. Selection of the Plant Capacity

The three main factors determining the capacity of a digestor are: the amount of feed material available, the detention time and the household energy requirements. In this case, it was decided to build an Indian-type digestor and to feed it only with animal and human excrement. Thus, it would not only be for gas and fertilizer production, but would also serve as a means of waste treatment.

The amount of feed material available for digestion was estimated, as shown in Table II, to be around 88 kg/day. Previous data obtained from prototype digestors operating at the National Research Centre, indicated temperature variations throughout the year, with a mean about 25°C. The retention time should be in the range of 50–60 days to achieve reasonable conversion of organic matter in the order of 40 per cent.
Under such conditions, the average daily gas production would be in the neighborhood of 0.3 cu.m./cu.m. digestor volume using a feed concentration of 8 per cent solids (i.e., around 1: 1 dilution with water). Therefore, for a retention time of 50 days, and a daily feed of around 180 liters (after dilution with water), the volume of the digestor would be 9 cu.m., which was the design size chosen. The average amount of daily gas production would be around 2.7 cu.m., which would be more than enough for all the family residential energy requirements.

8.0. System Design and Construction Work

A standard 8 cu.m Indian-type digestor would be around 4 meters deep underground. However, since the water-table at the demonstration locality was found to be 60 cm below ground level, a modified design was deemed necessary to cope with this situation in a technically sound and cost-conscious manner.

The modified-version digestor, as shown in Figure 1, was made of two vertical cylindrical sections. The lower section is shallow and wide to avoid going deep underground. It has a central baffle wall to minimize by-passing, which is particularly important in this case where a latrine is directly connected to the digestor. This lower section tapers to a narrower upper section which encompasses the gas holder. The net underground depth could thus be reduced to 2.0 meters.

The concrete base of the digestor was strengthened, to withstand the uplift force of ground water, by increasing its thickness. Furthermore, a circular horizontal ditch was dug around the base of the digestor, packed with gravel and connected to a deeper sump where the water could be continuously pumped out during construction. Finally, the digestor was provided with an external pipe connected to the sump to allow removal of water surrounding the digestor before emptying it for any reason.

The gas holder is of a welded construction made of mild steel sheets. The frame is made of angle iron, whereas the mixing bars are of flat iron. Though the essential design features of the gas holder are quite similar to the original Indian design, certain changes were introduced. The holder was made slightly wider and shallower than the original design in order to permit some saving in the restricted depth of the digestor. Moreover, the holder wall and roof were fabricated from thinner steel sheets to reduce its cost. The

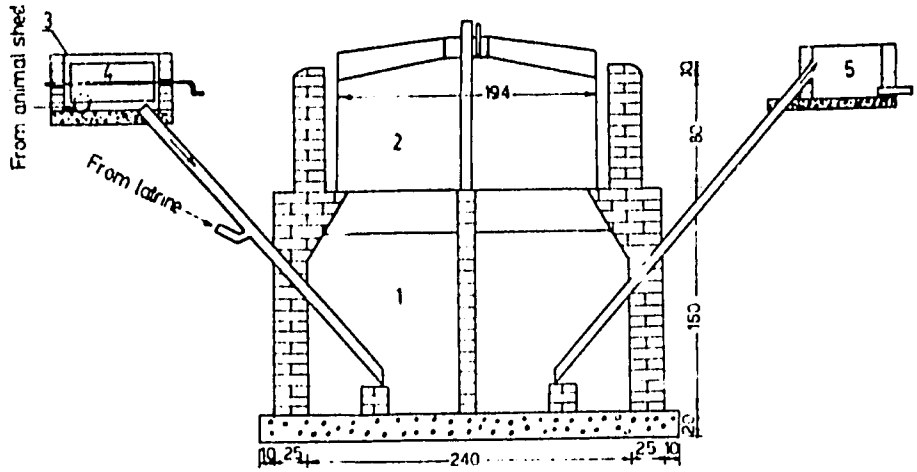

1 - Digester
2 - Gas holder
3 - Feed mixing chamber
4 - Feed mixer
5 - Effluent chamber

Fig. 1. The modified Indian type digester.

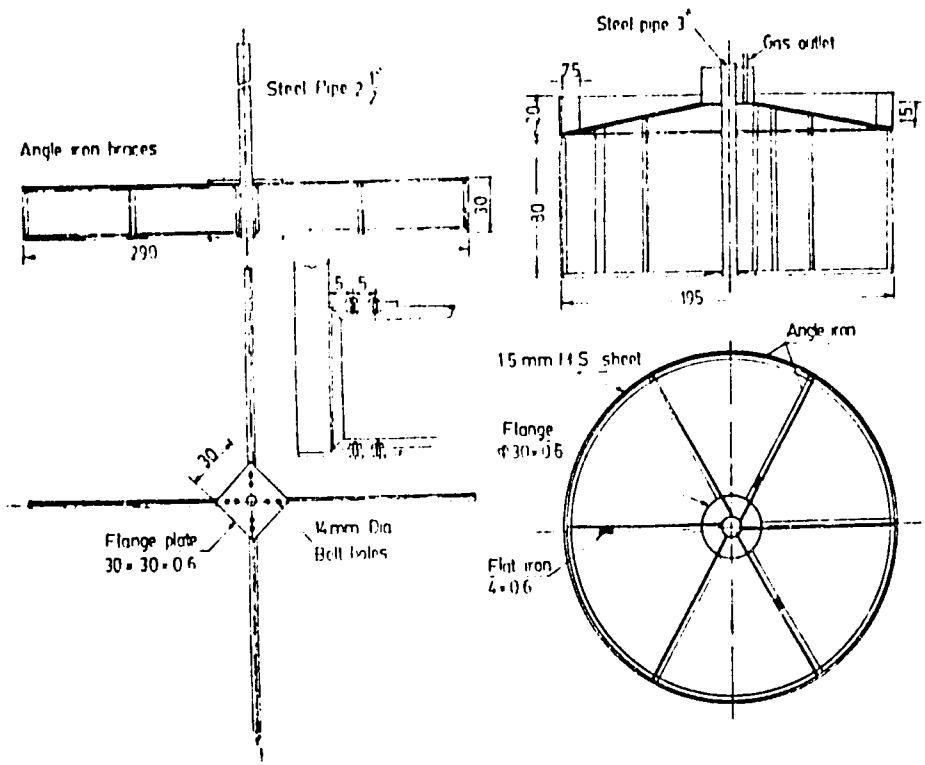

Fig. 2. The gas holder.

8

roof of the gas holder was provided with a small water tank to compensate for its lower weight and was covered with a polyethylene sheet umbrella to act as a solar heater at the same time. The whole surface of the gas holder was painted with an anticorrosion paint and was finally covered with bitumen. Figure 2 shows the detailed design of the gas holder with its central guide pipe. The gas holder can freely rotate around its axis and thus can affect some mixing and break any scum formation.

The feed and discharge ports of the digestor were made of 4 inch cement pipes. The feed pipe is connected directly to the latrine, whereas it is linked to the animal shed through the feed tank where the dung, urine and required amount of dilution water are thoroughly mixed. The feed tank is a small chamber 90 x 80 x 50 cm. fitted with a hand operated blade-type mixer. It is covered with a transparent polyethylene sheet. This cover serves two purposes. The first is hygienic, achieved through the confinement of the fresh wastes with their noxious odors and preventing them from being a breeding place for flies and insects. The second is as a heater warming up the tank contents by converting the tank into a sort of a solar collector. The size of the feed tank was set so as to accomodate the daily batch of shedfeed, which is kept in the tank for a few hours to be warmed up before being admitted to the digestor feed pipe.

The digestor exit pipe leads to a small discharge chamber, out of which the digested effluent flows to a drying pit.

In order to facilitate the handling of the manure and to increase its collection efficiency, certain shed modifications were affected. The floor of the animal shed was made of concrete. It was designed with appropriate slopes so that the urine could flow freely to a common channel along the whole length of the shed to which the dung could also be swept The channel discharges into the mixing feed chamber. In this way, the shed can be kept clean and the overall environment inside the house greatly improved. Moreover, the amount of manure collected is increased by more than 40 per cent. Much more significant, however, is the considerable economic saving resulting from abandoning the old shed bedding system with its associated handling and transport costs.

The gas line is made out of 3/4" galvanized iron piping which connects the digestor to all the points in the house where the gas is to be used. The whole pipeline is designed with sufficient slope so as to allow easy flow of any condensed water to a common water-drainage trap. The gas pipe is connected to five delivery points. Two of them are for a two-burner cooking range, the third for a specially-built oven, the fourth supplies the gas to a lamp for lighting and the fifth is used in the living room in conjunction with a portable burner for the making of tea.

A flexible rubber hose is used to connect the main gas line to the gas holder. This allows the easy rotation of the gas holder required for scum breaking.

All the gas-use devices were procured ready-made from the local market. Since they are intended for bottled-gas use, modifications were made so that they could use biogas efficiently.

Local village labor was employed for all construction work. Despite the greatest diligence, care and close supervision by the project engineering group, several problems were encountered during the construction phase. For instance, power failure was frequent (the team was using an electrically-driven pump for ground water removal), the owner of

9

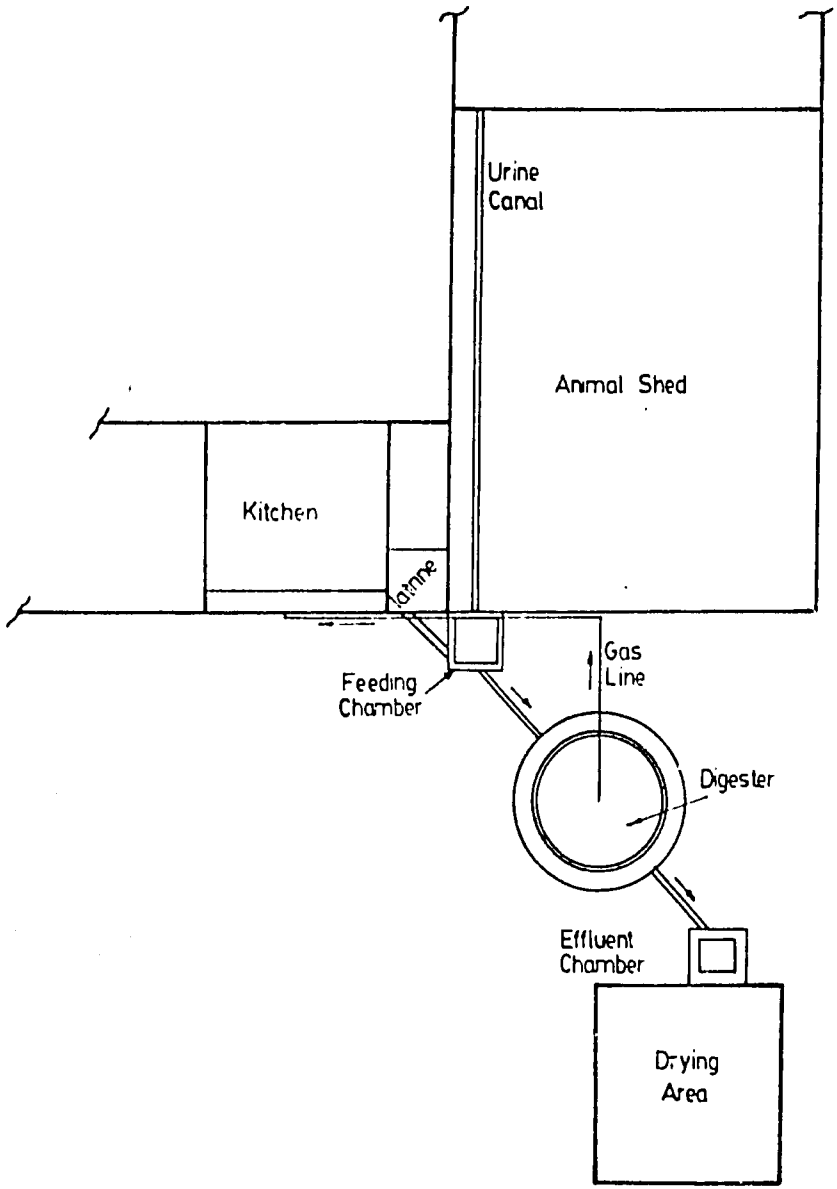

Fig. 3. Digester layout and connections.

10

the village workshop (who was given a small card-board model of the gas holder) did not meet his obligations and caused a considerable delay, and the work of the village plumber was defective and needed several repairs. Such mishaps led to a much longer than anticipated construction period. The householder, who was enthusiastic and very much drawn into the various events in order to acquire basic skills as well as a sense of ownership and pride, started to become somewhat meticulous, particularly when some of his skeptical non-supporting neighbors began to tease him. However, once the construction was accomplished, and the biogas plant was in successful operation, his confidence in the demonstrating team became unshaken. His house became the meeting place of many village residents. Even former non-believers were completely converted as if a "sort of miracle" something beyond their expectation had happened, and all of them wished that they had been "as lucky" as him and owned a similar biogas plant that would provide them with the kind of benefits that he would finally accrue.

The layout of the unit is shown in Figure 3.

9.0. Start-up of the Digestor

The digestor was started up on 7 May 1981. The amount of manure needed for about 50% of the initial charge was previously collected and stored during the last stage of the construction phase. It was about two weeks old and hence became semi-dry at the time of starting-up the digestor. Consequently, it was difficult to disperse in water and caused some blockage problems during the initial period of operation. The digestor loading was then gradually increased. Full capacity was reached in about 2 weeks from the start.

Gas started to build-up after the 6th day of initial loading. The contents of the gas holder were vented several times to ensure complete purging of any residual oxygen.

10.0. Regular Operation

Cattle manure and human excrement are the usual feed materials of the digestor. The unit is fed once every day with an amount of dung equivalent to that available from four full-grown animals. The normal cycle is that the urine (about half the weight of the manure) flows directly to the digester mixing tank, whereas the manure is swept towards the same tank. The required amount of water needed for dilution (½ the weight of manure since the other half is urine) is first used to wash the floor of the shed before flowing into the mixing tank. The manure-urine-water mixture, after being left for a few hours for solar heating, is thoroughly mixed with the blade mixer and then fed to the digester. Household human excrement, with the minimum possible amount of wash water (no flushing), flows directly into the digestor.

A volume of digested effluent equivalent to the quantity of the feed discharges from the exit pipe into the slurry pit where it is left for few days for partial drying and where it is mixed with a very limited amount of silt, kitchen waste, house garbage and some agricultural residues to absorb the excess water and increase the organic fertilizer yield. Every 7–10 days, the semi-dried product is loaded on the camel and transported to the field where it is stored in the compost heap till needed for use.

The gas generated is consumed in the house for cooking, water heating, tea-making, and sometimes for lighting when there is a power failure which occurs frequently in the village. The amount of gas produced is more than sufficient for these energy needs. Any water that condenses in the gas line drains into the condensate trap, where it discharges quite easily.

During the initial period of operation, the family members were trained for skillful operation and management of the unit. Within a relatively short period, they were familiar with all the details and precautionary measures and were capable of diagnosing and solving any problems in a very responsive and efficient manner. This allowed the project team a smooth disengagement and except for occasional sampling and performance follow-up, the management of the unit is completely undertaken by the family.

11.0. Follow-up of Digestor Performance

TABLE III

Performance characteristics of the modified Indian type demonstration unit at Al Manawat village

Period days	Date	Pressure cm. water	Temp. °C	Estimated retention time-days	State of operation	Gas production m^3/day	m^3/m^3 digester volume	m^3/animal
0	May 7		22	Start				
6	May 13	10		Start liberation of combustible gas				
33	June 9	10	25	90	Unsteady st.			
52	June 28	10	27	90	Unsteady st.	1.73	0.21	0.43
79	July 25	10	29	90	Steady st.	1.91	0.23	0.48
110	Aug. 25	10	29	90	Steady st.	1.74	0.21	0.44
164	Oct. 18	10	27	90	Steady st.	1.71	0.21	0.43

Key data pertaining to the performance of the demonstration unit over the past period, are compiled in Table III. As mentioned before, the unit was designed for a retention time of about 50 days on the basis of pre-estimates of the organic wastes available from the animal shed as well as the family residential energy requirements. Estimation of the capacity was based on the availability of dung from 8 animals. However, only the dung available from four full-grown animals was used. Accordingly, the actual amount of dung utilized in feeding the digester is estimated to be about 48 kg/day, which is equivalent to 100 liters/day after dilution to the required concentration. The unit was thus operated at a much longer retention period of about 90 days. Under these conditions, the maximum gas production rate reached was only around 1.9 cu.m. per day, which is equivalent to about 0.23 cu.m./cu.m. digestor volume-day. Gas analysis indicated that methane content is around 60 per cent.

The digestor effluent was also evaluated as fertilizer and an actual field fertilization experiment is still going on. The occurence and survival of some enteric pathogenic microorganisms and parasites are as well being followed up. It is too early, however, to assess these results.

12

TABLE IV

A preliminary economic appraisal of the demonstration unit (9 m^3)

Investment costs			
Digester building	350 L.E.[a]		
Gas holder	300 L.E.		
Modifications of animal shed	150 L.E.		
Connections and gas use devices	100 L.E.		
Total	900 L.E.		
Annual production costs		*International (L.E.) Energy basis*	*Local price (L.E.) Energy basis*
Depreciation			
Civil constructions (40 years)		12.5	12.5
Connections & gas use devices (10 years)		10	10
Gas holder (10 years)		30	30
Total depreciation		52.5	52.5
Repairs and maintenance		30	30
Rent of plant site land		6	6
Total annual production costs		88.5	88.5
Annual tangible benefits			
Biogas (kerosene equivalent)		79	24[b]
Saving in manure handling & transportation		100	100
Total annual income		179	124
Return on invested capital		10.1%	4%

[a] L.E. is Egyptian pound x 1.25 US $

[b] Actual savings accrued when commercial fuels (kerosene & butagas) were not used any more.

12.0. Preliminary Economic Appraisal

A summary of the calculations are given in Table IV. The profitability is analyzed in terms of the simple rate of return indicator because more sophisticated types of analysis are not warranted at this stage. Energy is valued in one case on the basis of the international price of kerosene, and in the other case on the basis of actual local prices. No value is assigned to either the raw materials or the produced organic fertilizer since they are assumed to be more or less equivalent. Only tangible benefits resulting from the biogas produced and realized savings in manure handling and transportation are taken into account. Intangible benefits relating to sanitary disposal of wastes, pollution control, improved health and women time saved in fuel preparation and cooking are not accounted for.

Results indicate that such a venture is at best marginally feasible. One reason for this is the under-utilization of the unit as it is operated at a much longer retention period than what it was designed for. Another reason is the extremely high governmental subsidies of local petroleum-base fuels.

13

13.0. Preliminary Assessment of Social Impacts

Aside from the early favourable impression widely spread in the village and the neighboring villages regarding the BGT, certain social impacts relevant to the family members of the demonstration household are worthy of delineation. These may be best described from the male and female members-of-the family points of view.

The head of the family and his son are extremely gratified with the introduction of BGT in their residence. Apart from the prestige and pride they feel as being country-wide pioneers in this regard, the monetary savings they realized are appreciable. Before owning a biogas plant, they used to bring large amounts of silt from the field and use it as an animals' bedding material. Much larger volumes of manure have to be moved in the reverse direction. These periodical handling and movements of silt and manure are highly labor intensive and costly. The modifications introduced in the animal shed in conjunction with the installed biogas system, reduced considerably the magnitude of these operations and affected around L.E. 100 in annual savings. Another saving was achieved when the generated biogas replaced the kerosene and butagas they used to buy before owning the biogas plant. This is estimated at more than L.E. 24 per year on the basis of locally subsidised fuel prices.

The ladies of the family felt the favourable impact of the biogas unit even more deeply. Since they stay most of time in the house and take care of all household-related activities, they are indeed the true beneficiaries of the installed system. The quality of their life has improved to a great extent. The house is now much cleaner and its environment much healthier. By having a clean, concrete-floor shed, milking the cows became a healthy enjoyable endeavour. Earlier, before the introduction of BGT, this was a terribly hated 'dirty' task particularly during winter when the shed floor gets extremely wet and muddy. Moreover, the family has acquired a modern kitchen equipped with a gas range and oven. Cooking is now a pleasure with no smoke and it is a much less time consuming activity.

In essence, the family is extremely happy, proud and pleased with the outcome of the demonstration. They receive visitors almost everyday and feel an indescribable pride in showing them the unit and explaining the type of benefits it can avail to them.

Bibliography

1. Abdel-Dayem A. M. and Hamad M. A., 'Design and operation of small biogas plants', Proc. of the 3rd Miami International Conference on Alternative Energy Sources, Miami, U.S.A. (1980).
2. A Chinese Biogas Manual, translated from Chinese, Intermediate Technology Publication Ltd. (1979), July.
3. Biogas Technology and Utilization, Chengdu Seminar, Sichuan Provincial Office of Biogas Development, China (1979).
4. Biogas Newsletter, No. 2, Bombay, India (1979) October.
5. Biogas Newsletter, No. 7, Nepal (1979).
6. El Halwagi, M. M., 'The development and application of biogas technology in rural areas of Egypt'. National Research Centre, Project Report (1978), Progress Reports (March 1979, Sept. 1979, January 1980, Sept. 1980, January 1981, Sept. 1981).
7. El Halwagi, M. M., Abdel-Dayem, A. M., and Hamad, M. A., 'Development and demonstration of rural prototype digesters in Egypt'. 2nd International Symposium on Anaerobic Digestion, Federal Republic of Germany (1981) Sept.

14

8. El Halwagi, M. M., Abdel-Dayem, A. M., and Hamad, M. A., 'Biogas technology for rural areas of Egypt'. 4th General Conference of the Advancement of Agricultural Sciences in Africa (AAASA), Cairo (1981) Oct.
9. 'Gobar gas: Retrospect and prospects', KVIC (1978,.
10. 'Gobar gas plant: Why and how', KVIC (1979) Jan.
11. Hamad, M. A., Abdel-Dayem, A. M., and El Halwagi, M. M., 'Rural biogas technology: Effect of digester pressure on gas rate and composition' (submitted for publication).
12. Hamad, M. A. and El Halwagi, M. M., 'The expected role of biogas technology in rural areas of Egypt: considerations'. 4th Miami Conf. On Alternative Energy Sources, Miami, U.S.A. (1981) Dec.
13. Hashimoto, A. G., Chen, Y. R., and Varel, V. H., 'Theoretical aspects of methane production: State of the art'. Proc. of the 4th International Symposium on Livestock Wastes, Amarillo, Texas (1980).
14. 'Methane generation from human, animal and agricultural wastes', National Academy of Sciences, Washington, D.C. (1977).
15. 'Microbial processes: Promising technologies for developing countries', National Academy of Sciences, Washington, D.C. (1979).
16. Ratasuk, S., 'An overview of small-scale biogas production', ESCAP Expert Group Meeting on Biogas Development, Bangkok (1978) June.
17. Ru-Chen, C. and Zhi-Ping, X., 'Digesters for developing countries – Water pressure digesters', Chinese Academy of Sciences (1979).

15