PN-AAP-594/62
ISN-33970

The Farallones Institute Rural Center

A TRAINING MANUAL

IN

APPROPRIATE COMMUNITY TECHNOLOGY:

An Integrated Approach to Training Development Workers

in the Application of Renewable Sources of Energy

to Meet Basic Human Needs

Beveloped by the Farallones Institute Rural Center
in Collaboration with CHP International, Inc.

ACTION/ Peace Corps
Contract #79-042-1027

March 20, 1980

15290 Coleman Valley Rd. Occidental, California 95465
(707) 874-3060

The Farallones Institute Rural Center

This training manual is one component of a pilot project undertaken at the Farallones Institute Rural Center in Occidental, California, from October 1979 through July 1980, in accordance with an ACTION/Peace Corps Contract to develop training materials and train future Peace Corps Volunteers in Appropriate Technology/Renewable Energy.

The Farallones Institute is a non-profit, educational organization dedicated to the research, development, demonstration, and application of potentially appropriate community technologies. In all programs and projects, an emphasis is placed on the integrated nature of renewable sources of energy, land and resource planning, water and waste recovery systems, and food production within the context of cultural and social acceptability, and local community self-reliance.

Previous Page Blank

15290 Coleman Valley Rd. Occidental, California 95465

(707) 874-3060

P R E F A C E

The Farallones Institute Rural Center, in collaboration with CHP International, Inc., was contracted by ACTION/ Peace Corps to provide technical assistance in the area of Appropriate Technology/ Renewable Energy; the contract is comprised of four phases:

- the development of a draft training manual (October, 1979)
- a two-month training program in the use of those materials (November 1979 through January 1980)
- a revision of the training materials, based upon the experience of the first cycle of training and suggestions for its improvement (February through March 1980)
- a second cycle of the training program (May through July 1980)

The material contained in the manual is generic in nature, and may be adapted for use in a variety of training situations. It is recommended, however, that all components be used, in order to maintain the important balance of technical expertise within the cultural, social, and economic realities of the developing world.

It should be noted that some of the recommended resources are protected by copyright, and permission should be obtained before reproducing them for general use.

Finally, it should be emphasized that although the majority of the training content was tested during the first training program, there are modifications and new materials that have yet to be implemented. We urge that the manual continue to be tested and modified, in order to provide the most useful and appropriate training possible.

We welcome suggestions and observations concerning the materials, methods and training content of this manual. Please contact the authors at:

International Programs
The Farallones Institute Rural Center
15290 Coleman Valley Road
Occidental, California 95465

THE TRAINING STAFF AND AUTHORS OF THE MANUAL

Laura Goldman is a visiting staff member at the Farallones Institute Rural Center, and is the Coordinator and Trainer for Health and Nutrition, and Women in Development for the Peace Corps Appropriate

Previous Page Blank

Technology/Renewable Energy program. She has a Master of Arts degree in Medical Anthropology, with a specialization in traditional health systems, and served for five years as a Peace Corps Volunteer in rural community health and renewable energy programs. In addition to other program responsibilities, Laura developed and edited the overall content of the training manual.

Paul Warpeha is visiting staff at the Farallones Institute Rural Center, and is the Technical Coordinator for the Peace Corps training program in Appropriate Technology/Renewable Energy. He has a Master of Arts degree in Appropriate Technology/International Development, and was a renewable energy specialist during four years of Peace Corps service. In addition to program coordination and training responsibilities, Paul designed the Volunteer in Development component of the training manual, and served as technical editor.

Christopher Szecsey is the staff Coordinator for International Training and Consulting programs at the Farallones Institute Rural Center, as well as the Project Director for the Peace Corps training program in Appropriate Technology/Renewable Energy. He has a B.A. in Anthropology, and served as a Peace Corps Volunteer in rural community projects for three years. In addition to other administrative, coordination and training responsibilities, Christopher developed the training materials on Mud Technologies, and serves as a Trainer during the program.

Donna Clavaud has a B.A. in Nutritional Anthropology, and is currently Food Systems Coordinator and Co-coordinator of the Community Technology Workshop at the Farallones Institute Rural Center. She is a Trainer in the Health and Nutrition component of the Peace Corps Appropriate Technology/Renewable Energy program, and assisted in developing those training materials, and in editing the training manual.

Peter Zweig, the staff Coordinator for the Solar Energy Program at the Farallones Institute Rural Center, has a B.S. in Biological Sciences, and has taught college level courses in solar design and energy conservation. He is the Trainer for practical solar applications, and developed the training materials in those areas for the Peace Corps Appropriate Technology/Renewable Energy program.

Dale Krenek is the Site Manager at the Farallones Institute Rural Center, and has a B.S. in Electrical Engineering. He serves as a Trainer during the Peace Corps Appropriate Technology/Renewable Energy program, and developed the training materials for Pedal Power applications.

Reny Slay, staff member and Office Manager at the Farallones Institute Rural Center, has a B.S. in Design. During the training program, she has served as administrative assistant and bookkeeper, and was responsible for the manuscript and layout of the training manual.

Howard Raik is a design consultant and President of CHP International, Inc., an organization specializing in the design and management of technical training programs in Latin America, Asia, and Africa. His firm has been contracted to provide staff training at the Farallones Institute Rural Center during the Peace Corps Appropriate Technology/Renewable Energy program, and to assist in the development of the manual and its implementation. Howard has contributed guidance and support in all phases of the contract, including the design, writing, and application of the training manual.

A C K N O W L E D G M E N T S

> Appropriate Technology reminds us that before we choose our tools and techniques, we must choose our dreams and values, for some technologies serve them, while others make them unobtainable.
>
> Tom Bender, in *Rainbook*

There have been many valuable sources of support during the development of the program and this training manual. It is only with the help of many people that we have been able to document the various tools and techniques that we have chosen to use in training people to go gently and lightly into the lives of others.

We thank the Farallones community for their continued support and patience; our special thanks go to Alison Dykstra, Judy Elliott, Bill Jewell, and Elizabeth Fleming for their extra measure of assistance.

We owe a great deal of gratitude to the people in Peace Corps/ Washington for facilitating materials, and lending general support to our efforts throughout the project: to Rita Warpeha, of the ACTION Library; the staff of ICE; Jim McCaffery, of OPTC; and especially to Ann Richardson, Judith Oki, and Paul Jankura of the Peace Corps Energy Project.

We are also grateful to the people of the Aprovecho Institute; the staff of the Appropriate Technology Project of Volunteers in Asia, Ken Darrow and Kent Keller; the Hesperian Foundation and Bill Bower; and to Brot Coburn, Jim Stewart, and Stuart Brown for their contributions and kind permission to use materials they have developed.

Perhaps our most important acknowledgment should go to the first group of Peace Corps Trainees to utilize this program. It is with them that we shared our dreams and values; we hope that the tools and techniques they have chosen will serve the world kindly and well.

TABLE OF CONTENTS

page

PREFACE v

ACKNOWLEDGMENTS viii

INTRODUCTION 1

TRAINING PROGRAM CALENDAR 11

PHASE
I. Introduction to Training Themes / Health and Nutrition / Women in Development / The Role of the Volunteer in Development 13

Phase Calendar 15

Overall Technical Objective 16

SESSIONS

1. Introduction to Training: A Focus on Basic Needs . . 17

2. Entering a Community: Tour of the Training Site/ Local Community 21

3. Construction of Mud Block Molds: A Focus on Group Dynamics 25

4. Adult Learning: Andragogy 29

5. Communication and Listening Skills 31

6. Cultural Values Clarification 35

7. An Experiment in Communication: Hollow Square/ Tool Box Construction 39

8. Assessing Community Needs, Part I 43

9. Global Energy Issues: An Introduction 45

10. The Environmental Impact of Development, Part I . . 49

11. Communication of Technical Information: Insolation Meter 51

12. An Exercise in Problem-Solving: Formulating a Plan for Well-being 53

page

13. The Environmental Impact of Development, Part II 57

14. Insolation Meter Construction, Part II 59

15. Women in Development: Changing Expectations for Women and Men 61

16. Community Assessment, Part II 65

17. Health in a Cross-Cultural Context 67

18. Mud Block Construction 73

19. The Role of the Appropriate Technology Extensionist in Development: A Focus on Mud Technology 77

20. Integration of Training Themes 81

ATTACHMENTS - Table of Contents 83
A through I 85-110
Task Analysis for Mud Blocks 111
Task Analysis for Insolation Meter 115

PHASE II. Mud Technology: Lorena Mud Stoves / Health and Nutrition / Women in Development / The Role of the Volunteer in Development 119

Phase Calendar 121

Overall Technical Objective 122

SESSIONS

1. Traditional Methods of Cooking 123

2. Environmental Health and Sanitation 125

3. Lorena Mud Stoves 129

4. Stove Base Construction 133

5. The Role of the Volunteer in Development 135

6. Stove Mass Construction / Technical and Extension Skills 137

7. Women in Development 139

8. Mud Stove Top Design and Excavation / Volunteer in Development: Extension Methodology 143

9. Volunteer in Development: International Development, Part I and Part II 147

10. Excavation, Carving, Finishing, Firing / Reading . . 149

11. Volunteer in Development: Environmental Impact . . . 151

12. Second Stove Base Construction 153

13. Women in Development 155

14. Stove Mass Construction and Design / Volunteer in Development: Extension Skills 159

15. Health and Nutrition: Custom and Food 161

16. Volunteer in Development: Introducing New Technology 163

17. Stove Mass Excavation and Extension Skills 165

18. Health and Nutrition: Basic Nutrition 167

19. Stove Finishing and Firing / Stove Cooking Preparation / Reading 171

20. Stove Cooking and Operation 173

21. Stove Operation, Maintenance, Repair, Evaluation / Reading 175

22. Stove Information, Resources, Evaluation and Disassembly 177

ATTACHMENTS - Table of Contents 179
A through T 181-250
Task Analysis for Fuel-Conserving Mud Stove 251

PHASE III Pedal Power / Health and Nutrition / Women in Development / The Role of the Volunteer in Development 257

Phase Calendar 259

Overall Technical Objective 260

SESSIONS

1. Introduction to Pedal Power 261

2. Alternative Uses and Design Considerations for Pedal Power 263

3. Food First: An Appropriate Technology Approach to Health/Nutrition 265

page

4. Classical Mechanics: Principles of Pedal Power 269

5. Familiarization with the Bicycle 271

6. Construction of Stationary Dynapod Frame 273

7. Health and Nutrition in a Cross-Cultural Context: Traditional Health Systems 275

8. Dynapod Construction: Seat 279

9. Dynapod Construction 281

10. Health and Nutrition in a Cross-Cultural Context: Rural Community Health 283

11. Design Power Transfer Systems 287

12. Technology and Food: Food Processing and Pedal Power . 289

13. Maternal and Child Health, Part I 291

14. Blacksmith and Metalworking Experience / Communication Skills 295

15. Adaptation of Apparatus 297

16. Maternal and Child Health, Part II 299

17. Appropriate Technology for Health: The Role of Women and Children in Preventing Dehydration and Malnutrition 301

18. Final Adjustments 305

19. Discovering and Defining Women's Roles in Development 307

20. Assessment and Modifications 311

21. Extension: Communicating Technical Information to Informally Educated People 313

22. Volunteer in Development: The Process of Change . . . 315

23. The Utilization of Pedal Powered Devices in Food Preparation 317

ATTACHMENTS - Table of Contents 321
A through Q 323-368
Task Analysis for Stationary Dynapod 369
Task Analysis for Mobile Dynapod 375
Task Analysis for Treadle Powered Device 379

MID-PROGRAM EVALUATION 383

page

PHASE IV Solar Water Heaters / Health and Nutrition / Women in Development / The Role of the Volunteer in Development 385

Phase Calendar 387

Overall Technical Objective 388

SESSIONS

1. Passive Solar Design: The Path of the Sun 389

2. Passive Solar Design: Insolation 393

3. Introduction to Solar Water Heating: Determining Hot Water Demand 395

4. Passive Solar Design: Heat Transfer 399

5. First Aid 401

6. Extension / Demonstration of Technical Concepts: Thermosyphon 405

7. Solar Water Heating: Presentation and Analysis of Data 409

8. Developing and Using a Sizing System 411

9. First Aid 415

10. Plumbing a Solar Water Heater 417

11. Water Heater Design: Group Problem Solving and Consensus Decision Making 419

12. First Aid 421

13. Shade Mapping and Site Selection 423

14. Site Preparation and Acquisition of Materials 425

15. First Aid 427

16. Construction of the Water Heater Enclosure, Part I . . . 429

17. An Exercise in Assessing Community Water Needs and Uses 431

18. Construction of the Water Heater Enclosure, Part II . . . 433

19. Water Tank Preparation 435

page

20. Connecting the Plumbing 437

21. Cultural Perspectives of Women and Men's Participation in Development 439

22. Food Preparation: Using and Assessing Solar Water Heaters 443

ATTACHMENTS - Table of Contents 445
A through EE 447-486
Task Analysis for a Solar Breadbox Water Heater . . . 487
Task Analysis for a Flat Plate Collector Water Heater 493
Useful Solar Formulas 503

PHASE V Solar Agriculture Dryers / Health and Nutrition / Women in Development / The Role of the Volunteer in Development 505

Phase Calendar 507

Overall Technical Objective 508

SESSIONS

1. Food Preservation and Storage: An Overview of Cultural, Historical, and Health Perspectives . . . 509

2. An Introduction to Solar Agricultural Dryers 513

3. Planning a Nutritional Garden 515

4. Issues in Development and Diffusion of Appropriate Technology, Part I 517

5. Passive Solar House Design 519

6. Principles of Agricultural Drying: Models 521

7. Development of a Sizing Formula 523

8. Solar Agricultural Dryer Design, Part I 527

9. Solar Agricultural Dryer Design, Part II 529

10. Women and the Development Process 531

11. Site Selection and Preparation 535

12. Materials Acquisition and Construction of the Dryer, Part I 537

page

13. House Design in Four Climates 539

14. Construction of the Solar Agricultural Dryer, Part II 541

15. Construction of the Solar Agricultural Dryer, Part III 543

16. Developing a Dryer Assessment Plan 545

17. Natural Cooling 547

18. Food Supply: The Relationship Between Agriculture and Nutrition 549

19. Dryer Assessment and Modifications, Part I 553

20. Extension Methodologies 555

21. Assessing Community Readiness for Women's Involvement in Development Projects 557

22. Dryer Assessment and Modification, Part II / Data Analysis and Reporting 561

23. Issues in Development and Diffusion of Appropriate Technology, Part II 563

24. Demonstration and Evaluation of Solar Agricultural Dryers 567

ATTACHMENTS - Table of Contents 569
A through U 571-618
Task Analysis for a Solar Agricultural Box Dryer . . 619
Task Analysis for a Solar Agricultural Dryer with a Flat Plate Collector 625

PHASE VI Appropriate Community Technology: Integration of Themes / Health and Nutrition / Women in Development / The Role of the Volunteer in Development 631

Phase Calendar 632

SESSIONS

1. Introduction to the Final Phase 633

2. Preparation Time for the Demonstrations 637

3. Assessing Community Energy Needs: The Peace Corps Energy Survey 639

page

4. Integrated Demonstrations, Part I 641

5. Women in Development: Project Assessment and Revision 643

6. Integrated Demonstrations, Part II (See Session 4) . . 641

7. Resources 647

8. Integrated Demonstrations, Part III (See Session 4) . 641

9. Individual Study Time 649

10. Integrated Demonstrations, Part IV (See Session 4) . . 641

11. Assessing the Role of the Peace Corps Volunteer . . . 651

12. Preparation for the Energy Fair 653

13. Energy Fair 655

14. Evaluation and Clean-up 657

ATTACHMENTS - Table of Contents 659
A through F 660

SUGGESTED RESOURCES 683

I N T R O D U C T I O N

PHILOSOPHY OF THE PROGRAM

Basic to the philosophy of appropriate community technology is the belief that solutions to fundamental problems must emphasize decentralization, full and active local participation, and user control. This philosophy implies an integration of cultural, social, economic, and environmental factors; and demonstrates an understanding that technologies do not naturally exist apart, and cannot be transferred automatically from one culture to another. Potentially appropriate solutions must focus upon, and be responsive to, community felt needs, and should provide lasting opportunities for local decision-making, community control, and personal involvement. As people exercise their right--and demonstrate their capability--to manage the technology they use, there occurs an increase in community self-reliance, self-determination, and the ability to solve problems creatively.

The role of the community facilitator--in this case the Peace Corps Volunteer--is to assist and encourage people in their efforts to attain the goals that *they* have established. In order to make an effective contribution to improving the quality of life, the development worker must understand and respect local values, customs, and beliefs; a disregard for tradition almost certainly precludes the acceptance of a potentially useful innovation. Therefore, it is vital to the concept of appropriateness that any application of technology occur within the context of local community needs, values, and realities: an appropriate technology must evolve from within, and cannot be the result of outside imposition, regardless of intent.

Technical competence is useful and effective only when applied in concert with the cognitive skills and attitudes implicit in the philosophy of appropriate community technology. There must be a recognition and a sensitivity to all aspects of culture, an understanding of the inter-related components that comprise diverse development issues, and a full awareness of the many implications of technological change. For this reason, it is crucial that the future Peace Corps Volunteer be provided with a background that integrates the many facets of appropriate development. This training program emphasizes, and is based upon, such fundamental integration.

GOALS OF THE PROGRAM

Throughout the program, the Trainee is provided with instruction in the development, use and application of community based technologies

to address basic human needs in developing countries. It is intended that the training program will enable the future Volunteer to:

- Assess and analyze community felt needs.
- Assist others in the design, adaptation, construction, utilization and maintenance of simple technologies that utilize renewable sources of energy and locally appropriate resources.
- Acquire and apply skills and attitudes that promote the improvement of the quality of life through local initiative, creative problem-solving, and community self-reliance.
- Examine and understand the cultural and societal values that accompany all overseas development workers.
- Develop and practice effective experiential learning processes.
- Understand the synergetic relationship between health and technology, and be sensitive to the inter-related nature of all aspects of culture.
- Encourage and include the active, full participation of all community members in projects and programs of change.
- Maintain personal well-being and the attitudes conducive to effective and appropriate overseas service.

DESIGN OF THE PROGRAM

The training program is designed to facilitate experiential and competency-based learning processes in all phases of the acquisition and application of technical and cognitive skills; it is based upon the principles of adult learning, which may be applied in a variety of situations, including village-level extension work. The science and art of facilitating adult learning is termed *andragogy*; implicit in its philosophy is a recognition that adults are capable of self-direction, and of diagnosing their own needs in order to solve problems in a creative and meaningful manner. During training, the program participants are expected to fulfill various performance criteria, and attain a certain level of knowledge and physical expertise. However, during the training process there is an emphasis on directed independent study in order to meet specific and individual learning needs.

Included in the training program are components in the following areas:

Renewable Energy/Appropriate Community Technologies

Health and Nutrition

Women in Development

The Role of the Appropriate Technology Extensionist

Each is related to, and integrated with, the other facets of training, reflecting the philosophical assumption that all aspects of culture--including technological, economic, social, political, and health systems--are inter-related and inter-dependent. A brief explanation of each component follows:

Renewable Energy/Appropriate Community Technologies

The program provides for skills training in all stages of technological development--design, construction, operation, maintenance, and repair--of the following devices and technologies:

Mud block and earthen (Lorena) stove construction
Pedal power (dynapod) applications
Solar water heaters
Solar agricultural dryers.

All design prototypes reflect, to the extent possible, the realities of rural areas in developing countries, and are illustrative of the criteria for *appropriate community technologies*: relative low-cost; simplicity of design; flexibility of scale; ease of construction, operation and maintenance; and, use of renewable sources of energy and local resources. The Trainee is encouraged to develop the ability to modify, adjust, or adapt devices to the potential requirements of individual Peace Corps assignments. An emphasis is placed upon the importance of the *process* involved in the appropriate application of technology, that carries beyond the specific designs or techniques utilized during training.

Health and Nutrition

Training in this component is provided in the following areas: personal health maintenance; environmental and global issues concerning health and nutrition; cross-cultural perspectives of health traditions and systems; education and consultation skills; maternal and child health; and the application of locally-appropriate technologies to promote, maintain, restore, or improve the health status in a rural community. Each aspect of health and nutrition training is connected to others in the program, and is integrated within the context of technical skills acquisition and application. The inclusion of this component in all phases of training emphasizes a commitment to provide a program in *appropriate* community technology that addresses the basic needs of people in ways that are compatible with local realities.

Women in Development

Throughout the program are specific sessions designed to develop an awareness and understanding of different cultural values, beliefs, and attitudes concerning sex role patterns. The impact of development efforts upon women is studied, and is examined within the context of potentially appropriate technologies. In all aspects of the training program, there is an emphasis on including *all* members of

a community--including women, children, the handicapped, and the elderly--in any proposed project of technological innovation. The Trainee studies the often ignored, but important, role of women in family and community health, economics, and agriculture, in order to make future development efforts more appropriate and beneficial to all community members.

The Role of the Appropriate Technology Extensionist

The acquisition and application of technical expertise is complemented by training sessions that focus on cultural values and perceptions, development issues, and extension and communication skills. Through readings, discussions, cross-cultural simulations, and community extension work, the Trainee is provided with adequate opportunity to develop and improve the necessary cognitive skills and attitudes for appropriate technology extension work. This component is well-integrated with every aspect of training, and emphasizes the need to thoroughly examine the potential impact of technological innovation and change upon rural people in traditional societies.

PHASES OF TRAINING

The training program is divided over an eight-week period into six structured blocks of time, termed *Phases*: each includes a technical theme, around which are organized related skills, information, and knowledge in the various components. Some of the sessions within the phase are devoted to practical skills acquisition and application, and represent a technical integration with health and nutrition, women in development, and the role of the appropriate technology extensionist. Other sessions are presented as "core curriculum", and comprise essential background material upon which technical skills may be applied. All sessions are presented in sequence, in order to provide a framework for each phase, and in turn, for the entire program, that leads the Trainee to build upon previous learning experiences to develop effective and appropriate extension skills.

Phase I: Introduction to Training

This phase provides an overview of the training program, and gives an initial exposure to the themes and issues related to development that will be examined throughout the following weeks. A number of themes are interwoven, and are all connected to the potential applicability of appropriate community technologies to address basic human needs. Group dynamics, and communication and extension skills are introduced within the context of experiential learning on-site (mud technology, insolation meters) and in the local community (where local systems and needs are assessed). As cross-cultural perspective is gained in technical, health and development issues, the Trainee makes the transition to the next phase of learning.

Phase II: Mud Technology - Lorena Mud Stoves

The technical sessions in this phase focus on earthen construction, and form a basis for related learning experiences in extension and communication skills, environmental health and sanitation, disease vectors, and the wide-reaching impact of technological change, Traditions surrounding dietary customs are analyzed, and the concepts of basic nutrition are studied in relation to the Volunteer's role as an overseas development worker. The Lorena stove is presented as a method of conserving fuel, and improving local health and self-reliance; it is also emphasized as a technology that encourages the active participation of women in all aspects of its application. During this phase, the term "appropriate technology" is examined, and the issues of international development are discussed within the context of past and future projects of technological change and innovation.

Phase III: Pedal Power

The design, use and potential application of mobile and stationary dynapods are major themes during this phase of training. Pedal power is examined as a renewable source of energy with many possibilities for locally-appropriate uses, such as food grinders, water pumps, and various low energy tools and machines. Throughout the sessions, the applicability of dynapods is studied, in regard to impact on local systems, health and nutritional status, and the role of community members in the use of such devices. Communication and extension skills are further developed, as is an understanding and awareness of the health traditions, problems and issues in developing countries.

Phase IV: Solar Water Heaters

The sun is a major renewable source of energy with great potential for application in a variety of situations. Solar energy is the focus of this phase, during which the design, construction, and use of solar water heaters provides a background for assessing community needs, developing an awareness of cultural traditions, and improving communication and extension skills. Although construction emphasizes the direct gain (breadbox) design prototype, plans for a flat plate collector are presented as an option for independent projects. In addition to other learning experiences, training in basic first aid is offered as an important component of skills acquisition and application.

Phase V: Solar Agricultural Dryers

The potential application of the sun's energy is again the focus of a training phase. Techniques and devices for agricultural drying provide a framework for the study of traditional methods of food preservation and storage, and for potential strategies to improve health and nutrition through more efficient, and locally appropriate technologies. The correlation between agriculture and health is emphasized, as is the relationship of international development efforts to the appropriate diffusion of technological innovation.

Phase VI: Integration of Themes

In the final phase of training, the various themes and issues presented throughout the programs are gathered, and integrated within the context of the technical and cognitive skills that the Trainee has acquired and developed. In addition, the activities of the last week serve as a bridge from the training program to in-country service, and prepare the Trainee to apply the learning experiences of the past weeks in ways that will enhance the effectiveness and appropriateness of Peace Corps Volunteer service.

Note:

In the training program at the Parallones Institute, Phases II and III, and IV and V are implemented concurrently. That is, half the Trainees receive instruction in the technical aspects of one phase, and half in another. Certain sessions are identified as "core curriculum" and are given to all Trainees; those include many of the health and nutrition, women in development, and volunteer in development materials. For example, in Phases II and III, half the Trainees concentrate on mud technology, while the others focus on pedal power. They join for a number of "core" sessions, but during most of the technical aspects of training, the Trainees are involved in different areas. This design facilitates staffing, and provides for smaller groups, so that more individual attention may be given to encourage creativity. In addition, cross-fertilization of ideas, potential applications, and solutions to design problems occur more freely when there is diverse activity.

GUIDELINES FOR IMPLEMENTATION OF THE PROGRAM AND USE OF THE MANUAL

This program and manual have been conceived and developed as an integrated approach to training. Although some flexibility is encouraged to adapt the program to meet specific needs, it is recommended that the implementation of the program include all components, in the sequence that they appear in the manual. The program and manual are designed for use within the following guidelines:

- An experienced appropriate community technology practitioner, with basic teaching expertise, should be able to provide training to others by following the instructional sequence in the manual.

- A Trainer with limited technical skills, and with an understanding of socio-cultural issues, development strategies, and health information, should be able to provide training to others in the appropriate application of technical knowledge within the cross-cultural context.

- A Trainee with no previous experience in appropriate community technology should be able to gain a complete and accurate awareness of the skills, knowledge and attitudes necessary for the effective application of such technologies in a foreign culture.

- Both the Trainer and Trainee should be able to attest to the Trainee's mastery of requisite skills and acquisition of necessary information by using the assessment materials and instructions contained in the training manual.

- The Trainer should be able to implement the training program in a number of situations, with a variety of available materials, and in the presence of varying cultural norms.

Explanation of Terminology Used in the Manual

Phase: A structured period of time that includes materials from each component of the program, and that is organized around a basic theme. Phase I and VI are each one week long, and Phases II through V each last approximately 1½ weeks.

Session: A unit or class in which specific subject matter, or skills, are presented. These include practical and technical experiences as well as classroom sessions.

Time: The approximate number of hours or minutes estimated to be necessary to complete a session or procedure. Times given may be adapted according to individual program requirements.

Objective: Certain behavioral indicators used to measure the Trainee's progress toward fulfilling the goals of training. *Overall Technical Objectives* appear at the beginning of each phase, and define the expected result of each technical project. *Interim Objectives* are incremental steps for gaining skills needed to achieve the overall technical objectives, and appear throughout the technical sessions. Simple *Objectives* appear during sessions in Health and Nutrition, Women in Development, and The Role of the Volunteer in Development. All objectives are based on the Trainee's level of competence in a given area, and include a statement of the required performance, relevant conditions under which the exercise takes place, and, in most cases, the criteria that constitute acceptable completion of the task. The objectives are intended to serve a twofold purpose: to provide the Trainer with a tool for evaluating the Trainee's performance; and to give the Trainee a framework for what is expected, and to use as a means of self-evaluation. Therefore, early in the program, the objectives should be made available to both the Training Staff and the Trainees.

Overview: A brief summary statement at the beginning of each session, explaining the focus as well as the content of the particular session.

Suggested Resources: A compilation of reference teaching materials appearing in each session that includes background and assigned readings and exercises. The Trainer should be familiar with the majority of materials before facilitating the session.

Materials Needed: The equipment or supplies necessary to conduct an activity. In many cases, alternative materials may be easily substituted.

Procedure: The suggested format for conducting a session, including detailed descriptions and times required for each step.

Attachments: Exercises, worksheets, guidelines and other materials for distribution to the Trainee; also, reference materials for the Trainer. These are located at the end of each phase, and correspond to individual sessions. For example: Attachment I-1-A indicates that it is in Phase I, Session 1, and is the first attachment of that session.

Task Analysis: A detailed overview (primarily for the Trainer's use) that identifies the construction procedures to be accomplished, their elements, performance criteria, required knowledge and skills, and materials and tools necessary to complete the activity. These appear after the attachments corresponding to each phase.

Additional Considerations

Staff

It is recommended that there be a balance of skills among the training staff members. For example, it is helpful if the staff includes at least one person in each of the following areas: an appropriate technology practitioner; a person knowledgeable in development issues, including women in development and the role of the overseas development worker; a health and nutrition practitioner and/or facilitator; and a qualified staff trainer, experienced in the implementation of adult learning concepts and management training techniques.

Staff training should occur before the program begins; this is recommended in order to familiarize the staff with the principles of adult learning processes, so that they are able to effectively implement the philosophy of appropriate community technology inherent in the training program. In addition, staff training provides an excellent forum for team development and cooperative effort.

Staff members should investigate the relative appropriateness of devices and/or materials that will be used, before the start of the

program, in order to determine suitability for training and for in-country application. In addition, it is suggested that the Trainers build the devices prior to the training program, so that they may enhance their understanding of design, construction techniques, time necessary and potential applications of the technology. Such devices may serve as demonstration models during training.

There should be at least one staff member for every five Trainees, to ensure adequate and comprehensive skills training. Such a ratio also facilitates the formation of groups for various activities and projects, and for individual counseling or "counterpart" sessions between staff members and Trainees.

If outside consultants are utilized for any amount of time, they should be considered and selected with care. It is important not to lose the focus of the program through the use of too many people not familiar with the details, philosophy, or goals of training. However, it is recommended that local resources (including community members, appropriate technology and health practitioners, and craftspeople) be utilized to enhance the learning process.

Training Participants

The Trainee's technical and cognitive skill level should be assessed before training begins, and any relevant experience considered, in order to adapt the training materials and content to accommodate individual needs. It should be noted, however, that a certain beginning level of skills and attitudes is necessary for successful completion of the program.

It is extremely helpful to know the region, country, and the job assignment for each Trainee before training begins. If this is not possible, then information about country and job assignments should be made available as soon as it is known.

Many of the activities are performed in groups; such division may be made on the basis of region or country assignments, skill levels, Trainee preference, or when appropriate according to other criteria. Groups should be of a size that facilitates learning and encourages the active participation of all members.

Resources

The program is based upon experiential learning, and is enhanced by integrating training to include the local community. The Trainee can gather valuable field experience through assessing local needs, developing potentially appropriate solutions, and practicing communication and extension skills that are applicable to future Peace Corps service. In addition, the local community may provide resources through schools, libraries, health clinics, and interested professionals and other community members.

A wide selection of related readings at the training site is important in order to provide adequate background and reference materials. The suggested resources listed in this manual (pp.683-688) are recommended as the basis for a training program library.

It is recommended that sufficient individual reading time be allotted so that the Trainee may utilize available resources, and contemplate new information.

Films, slides and other audio-visual presentations are valuable additions to the training program. These should be offered as evening activities, or occasionally incorporated during training sessions. Any presentation should include time for discussion, and may be combined with a social gathering or informal conversation.

A Final Note

The training program that this manual represents has been developed and tested in one setting--The Farallones Institute in northern California; the resources and staff may be very different in another situation. Therefore, it is urged that the program and the training manual be adapted and modified where necessary, in order to facilitate effective and meaningful learning experiences, and develop qualified and *appropriate* community technology extensionists.

TRAINING PROGRAM CALENDAR

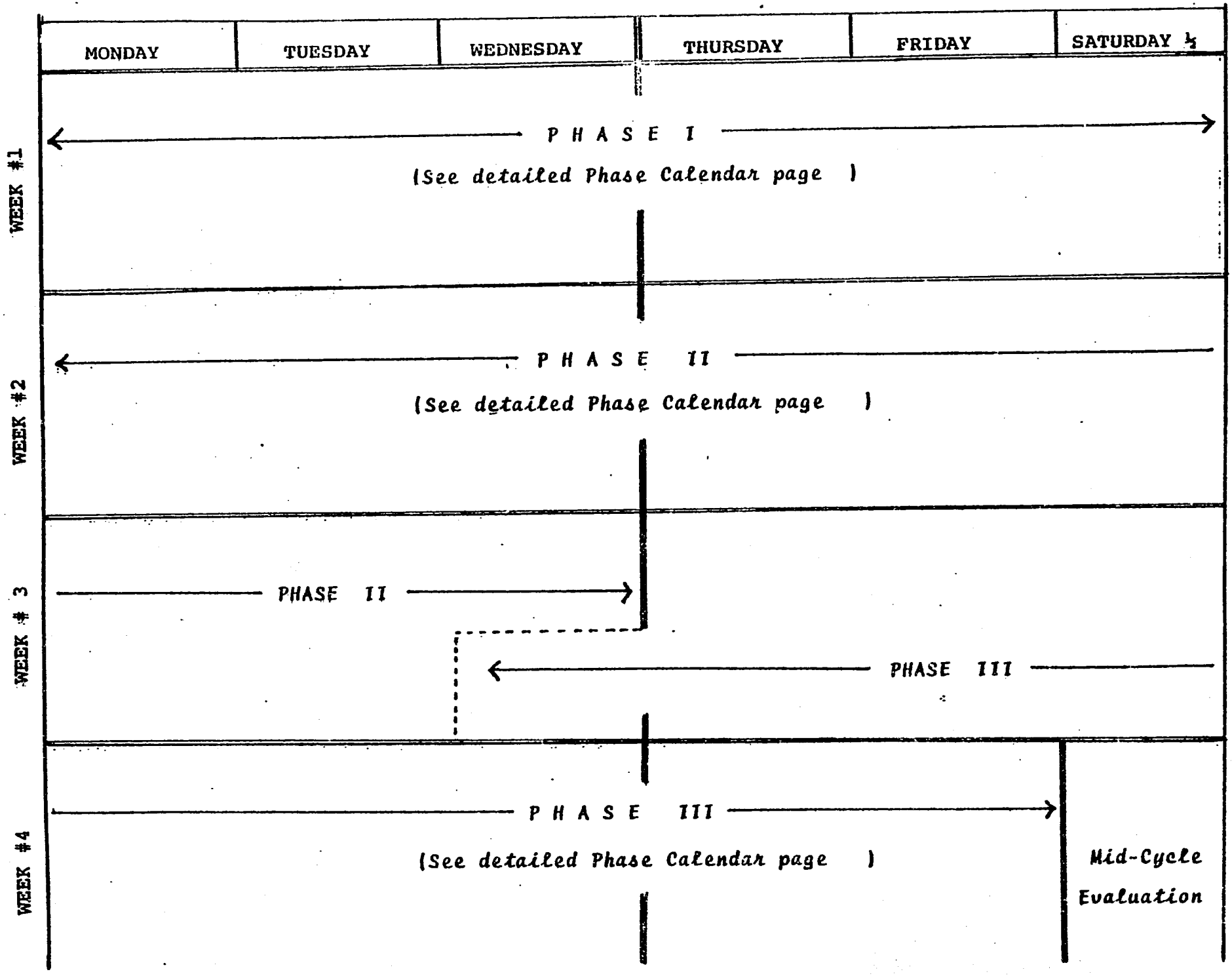

	MONDAY	TUESDAY	WEDNESDAY	THURSDAY	FRIDAY	SATURDAY ½
WEEK #5	PHASE IV (See detailed Phase Calendar page)					
WEEK #6	PHASE IV			PHASE V		
WEEK #7	PHASE V (See detailed Phase Calendar page)					
WEEK #8	PHASE VI (See detailed Phase Calendar page)					

PHASE I : INTRODUCTION TO TRAINING THEMES

HEALTH / NUTRITION

WOMEN IN DEVELOPMENT

ROLE OF THE VOLUNTEER IN DEVELOPMENT

PHASE I

	DAY 1	DAY 2	DAY 3
A.M.	Session 1: Introduction to Training: A Focus on Basic Needs Session 2: Entering a Community: Tour of the Training Site/Local Community	Session 5: Communication and Listening Skills Session 6: Cultural Values Clarification	Session 9: Global Energy Issues: An Introduction Session 10: The Environmental Impact of Development, Part I
P.M.	Session 3: Construction of Mud Block Molds: A Focus on Group Dynamics Session 4: Adult Learning: Andragogy	Session 7: An Experiment in Communication: Hollow Square/Tool Box Construction Session 8: Assessing Community Needs, Part I	Session 11: Communication of Technical Information: Insolation Meter, Part I Session 12: An Exercise in Problem Solving: Formulating a Plan for Well-being

	DAY 4	DAY 5	DAY 6
A.M.	Session 13: The Environmental Impact of Development, Part II Session 14: Insolation Meter Construction, Part II	Session 17: Health in a Cross-cultural Context	Session 19: The Role of the Appropriate Technology Extensionist in Development: A Focus on Mud Technology Session 20: Integration of Training Themes
P.M.	Session 15: Women in Development: Changing Expectations for Women and Men Session 16: Community Assessment, Part II	Session 18: Mud Block Construction	

Previous Page Blank

OVERALL TECHNICAL OBJECTIVES

Mud Block Construction

Given construction materials and several batches of soil mixtures, the Trainee will build a mold and use it to make mud blocks that show little or no "slumping" immediately after removal, and little or no cracking or crumbling after 2-3 days' drying time. In addition, the Trainee will demonstrate an understanding of mud as an indigenous construction material, and its uses and potential applications in a cross-cultural context.

Insolation Meter

Given the necessary materials and tools, the Trainee will construct a simple insolation meter, place it at the proper orientation and tilt, and calculate the insolation for the potential solar site to within 2% of the Trainer's calculations using the same data.

SESSION 1
Introduction to Training: A Focus on Basic Needs

Time: 2 hours 10 minutes

Objective: The Trainee will identify and examine factors that influence and contribute to human survival; and based on that information, will develop a working definition of the term "basic human needs".

Objective: Utilizing information provided by the Trainer, and based upon individual expectations of the training program, the Trainee will describe potentially appropriate ways in which technology can be applied to meet basic human needs in developing countries.

Overview: In this initial session, the Trainees are presented with the philosophy, goals and objectives of the training program; and are encouraged to clarify individual expectations about the training they hope to receive. In order to facilitate a better understanding of the structure and purpose of the program, the concept of basic human needs is examined and defined, within the context of the potential applicability of appropriate community technologies.

Suggested Resources

de Moll, Lane, and Gigi Coe, *Stepping Stones*, pp.65-68; 43-46.

Ingalls, John, *Andragogy*, pp. 22-31.

Attachment I-1-A : Peace Corps Programming Criteria

Materials Needed: Newsprint and markers, pens and paper.

Procedure

1. (10 minutes) A brief overview of the session is presented within the context of the overall goals and objectives of the training program (see the introduction to the manual for content).

Note: It is recommended that an initial introductory session be held before the actual training begins. However, if the Trainees have not met with the Training staff before this session, some time should be allotted for introductions and a "warm-up" activity.

2. (10 minutes) The Trainees are asked to list their individual perceptions of basic human needs. They may wish to focus on an examination of personal needs in order to facilitate this exercise.

3. (15 minutes) The Trainer requests a few suggestions concerning the needs identified; however, discussion should be saved until later. The article "The Conscious Culture of Poverty" by E.F. Schumacher (pp. 43-46 in *Stepping Stones*) is distributed, and a few minutes allotted so that the Trainees may read it.

4. (30 minutes) The Trainees form groups of 4-5 people, and do the following:

- List 5 or 6 basic needs common to people throughout the world.
- From that list, devise a working definition of the term "basic human needs", and write it on a sheet of newsprint.
- On the same sheet as the definition, list ways in which technology potentially can be applied to meet basic human needs.

The Trainer may give an example or two, before the activity is begun:

> A basic need of all people is adequate, nourishing food; therefore, a nutritious food supply should be mentioned in a definition of basic human needs. A potential application of technology to meet dietary requirements might be a grain dryer, a stove that facilitates cooking, or planting and harvesting devices.

5. (20 minutes) Each group presents the definition that has been developed; and a discussion focuses on the common elements found in each. These should include:

- freedom from disease
- adequate quantity and quality of food
- access to clean and potable water
- adequate shelter
- a physical and psychological environment that promotes well-being, creativity, and local self-reliance.

If any of the above-mentioned needs are not mentioned, the Trainer should suggest them as important components of a comprehensive definition.

After discussing the definitions, the Trainees present various ideas for the potential applications of technology to address basic needs. The Trainer should indicate those areas that are to be emphasized during the training program.

6. (15 minutes) The Trainees write their expectations of the training program based on what they hope to learn, what they perceive as their weakest and strongest area in skills and knowledge, and what type of expertise they think will be necessary for the job that they have been assigned.

7. (10 minutes) The Trainer compiles a list of the Trainees' expectations, and posts it so that it may be clearly seen. The expectations of the Training staff are also listed on a separate sheet, and compared to those of the Trainees.

Note: The lists of expectations are excellent resources for the development of Trainee learning contracts. It is recommended that during individual counseling sessions (in the Farallones program, termed "counterpart" sessions), the Trainees discuss their expectations and needs, compare them with those of the Training staff, and formulate a contract (either written or oral) upon which to base their learning experiences during the training program.

8. (20 minutes) The Trainer summarizes the intent of the training program, stating that the program will emphasize the acquisition and development of skills in:

- the process of community development
- the construction, operation, and maintenance of small-scale technologies
- cross-cultural awareness and sensitivity
- health and nutrition
- the application of appropriate community technologies involving the active participation of all community members.

The Peace Corps Programming Criteria Sheets are distributed (Attachment I-1-A) and reviewed, followed by a general discussion and any additional questions.

At the end of the session, the article, "Technology with a Human Face," by E.F. Schumacher, is distributed and assigned (pp. 65-68 in *Stepping Stones*).

SESSION 2
Entering a Community: Tour of the Training Site/Local Community

Time: 2-3 hours

Objective: The Trainee will identify and examine various systems in a community that have been locally developed to address and meet basic needs, including those of energy, food and water supply, shelter, waste disposal or recovery, education, and self-expression.

Overview: The training site and environs may serve as excellent resources in the development of important extension skills, including the Trainees' ability to accurately assess and analyze local community needs. At the beginning of the training program, it is helpful to observe and learn about a community, in order to facilitate an understanding of the ways in which basic needs are met, and support systems are developed; in this session, such learning experiences are initiated.

Suggested Resources

The Farallones Institute, "Integral Designs", Chapter 2 in *The Integral Urban House*, pp. 10,19, 27: models of flow charts showing integrated support systems. (Handouts)

Brownlee, Ann, *Community, Culture, and Change*, pp. 1-41.

Materials Needed: Pens and paper.

Procedure

1. (10 minutes) As an introduction to the session, the Trainer may give the following brief talk:

> When entering a new community, it is very important to first look and listen. Remember that when you are in a new community, you are a guest; and often, depending upon the way you approach the experience, you will either be treated as a guest, a curiosity, or an intruder. Allow time to sensitize yourself to local ways, to the balance that exists in the ecology, to the rhythm of life, and to the outlook of the local people. In assessing the needs, capabilities, and desires in a community, it is helpful to examine and understand existing support systems -- that is, the services, technologies, and customs that form the fabric of community life, and provide for the basic needs of the people who live there. In gathering information about a community, it helps to recognize that all aspects of life are inter-related, and that it is difficult--if not impossible--to separate one area from another. It is towards an integrated view of community systems that appropriate extension work strives, and that is the purpose of the exercises that will follow in these community assessment sessions.

The Trainer should review Chapter 1 (methods of gathering information) in Brownlee, and present some basic guidelines for gathering

Previous Page Blank

information in a new community. (This may be done very superficially, since the Trainees will have the opportunity to read the chapter after the session.)

2. (10 minutes) The Trainer distributes schematic flow charts (see *The Integral Urban House*, pp. 10, 19, 27, showing Habitat and Life Support System of an Integral Urban House, Energy Flow in a Closed System Habitat, Integral House Ecosystem), and reviews the integrated energy and support systems that describe an urban community.

3. (1 hour 30 minutes - 2 hours 30 minutes) The Trainees form small groups for a tour of the training site, or a visit to a local community. They should be encouraged to focus on observing various means that the community has developed to meet basic needs, e.g., small scale, renewable energy technologies; food production and distribution systems; water supply and waste recycling systems; etc.

Note: If the tour takes place at the training site, it may be more guided than if it occurs in a less receptive or accessible community environment. If the visit is to a local community, it is helpful if a member of the training staff accompanies each group (only for this initial visit) to provide some explanation and clarification. However, the Trainees should, as much as possible, rely on their own observations and perceptions. The tour or visit are intended to provide an initial view of a community, and are not meant to give an in-depth understanding of all community systems, needs and concerns.

4. (20 minutes) When the tour or visit is completed, the Trainees meet (in the groups established for the tour) to discuss their perceptions of the ways in which basic needs of the community are met. After an evaluation of the possible concerns in the community, the group develops a plan to obtain additional information about *one aspect* of the community that is related to meeting basic needs: e.g., health systems, energy and fuel supply, shelter, technology, food production and distribution, water and sanitation.

Note: The Trainer should circulate and ascertain that groups have selected, for study, different aspects of community life. The plan should include:

- methods of gathering information (interviewing, questionnaire, observations, etc.)
- specific questions to be asked of people in the community (those who work in the area of concern, as well as those affected by the problems)
- areas that merit further observation, in order to learn more about the inter-relationship of various aspects of community life.

It is likely that the plans will not be completed by the end of the session. The Trainees may wish to meet later to continue working, although some additional time will be allotted in *Session 8*.

At the end of the session, pp. 1-41 in Brownlee are assigned.

SESSION 3
Construction of Mud Block Molds: A Focus on Group Dynamics

Time: 3 hours 30 minutes

Objective: See *Session 18*

Overview: In this training program, experiential learning and group collaboration are emphasized as necessary components of effective and appropriate extension work. The Trainees participate in various projects that facilitate development of technical, as well as communication, skills. During this session, the construction of molds to be used in the fabrication of mud blocks serves as a vehicle for developing an awareness of group dynamics and decision-making styles that will be useful throughout training and future Peace Corps service.

Suggested Resources

Ingalls, John D., *Andragogy*, pp. 38-45; pp. 140-143.

See also *Session 18, Suggested Resources.*

Attachment I-3-B : Mud Block Molds

Attachment I-3-C : Effective Group Survey

Materials Needed: Scrap lumber (2" x 4" or 1" by 4"), nails, hammer, saw, tape, newsprint, markers.

Procedure

1. (15 minutes) An overview of the session is presented and an agenda posted. The Trainer makes some brief remarks about mold construction, including:

   - The size of the mold depends upon the desired block size and its intended use.

   - Blocks should be of a manageable weight, in order to be easily handled.

Attachment I-3-B is distributed, and the differences between individual and gang molds are explained, including a description of various possible dimensions for mold construction. If there are any questions, they should be addressed before the Trainer continues. The available materials and tools are described and shown, and then instructions are given for the construction activity:

Trainees should form construction groups of 2-3 people (such divisions may reflect region or country of assignment).

Each group should utilize one of the three possible dimensions given for individual mold construction.

Previous Page Blank

An attempt should be made to work cooperatively, with the active participation of all group members.

2. (1 hour) While the Trainees are building individual molds, the Trainer circulates among the groups to check progress, and to see that the mold is rigid, easy to handle, and built according to specifications.

3. (15 minutes) Each group is instructed to join with another, and discuss observations of the group process, both on a technica and interpersonal level. Some questions that may stimulate discussion follow:

What were the reactions of group members regarding various individual technical skill levels in the group? Did people find it a help or a hindrance to work with people of different skill levels?

How were decisions made during the construction process?

What factors contributed to or impeded mutually-shared decision-making?

4. (40 minutes) The groups of 4-6 build gang molds, according to design and material specifications.

5. (20 minutes) When the molds are finished, the groups discuss the differences observed between working in a small and then a larger group. The group members complete the Effective Group Survey (Attachment I-3-C), and discuss their responses and conclusions.

6. (10 minutes) All groups assemble, and the Trainer presents a summary of various styles in group decision-making, including:

- the "plop"
- self-authorization
- handclasp
- baiting
- authority rule
- majority vote
- unanimous consent
- consensus

(see Ingalls, pp. 40-41)

A short discussion follows, concerning the potentially positive (satisfying) or negative (frustrating) consequences of each type of decision-making technique. The Trainer should point out that all the styles, with the exception of consensus, often preclude the full involvement and commitment of some group members, or ignore important issues that should be raised. Mutually-shared

decision-making, termed consensus, is a positive alternative to other styles; although it may require more time and increased sensitivity to the individual group members, it provides for the involvement and commitment necessary to group cohesiveness and cooperation.

7. (10 minutes) Each group of 4-6 meets to discuss the styles of decision-making that characterized their group during the construction of gang molds.

8. (10 minutes) The Trainer guides a summary of group conclusions concerning decision-making styles, and group cooperation. Some points for discussion are:

- The perceived value of different styles to facilitate accomplishing a group task.
- The reaction of group members to various styles.
- Observations of ways to improve group dynamics during training.
- The application of such experiences to the role of the appropriate technology extensionist.

SESSION 4
Adult Learning: Andragogy

Time: 1 hour

Objective: The Trainee will identify and discuss the methods by which adults learn most effectively, and will apply that knowledge to the development of appropriate extension skills.

Overview: It is a component of human nature that people learn best when they are able to examine and evaluate their own experiences in the light of new knowledge or skills. In this session, the Trainees are encouraged to discuss past experiences that for them have been instrumental in facilitating and reinforcing the educational process. Through an examination of helpful factors and methods, the Trainees are able to extrapolate their own learning experiences to help them in the training program, and during future service as Peace Corps Volunteers.

Suggested Resources

Ingalls, *Andragogy*, pp. 1-11.

Materials Needed: Newsprint and markers; chalkboard and chalk.

Procedure

1. (5 minutes) The Trainer presents an overview of the session, including a statement of the objective.

2. (20 minutes) The Trainees form groups of three, and recall experiences in their lives that illustrate what they believe to be effective learning. Some examples might include: working with a competent craftsperson or mentor; working on an independent study project, under the guidance of a stimulating instructor; or being actively involved in a hobby. A recorder is selected, and a list is made of the common factors that were conducive to learning. An emphasis should be placed on <u>how</u> learning occurred, not <u>what</u> was learned.

3. (10 minutes) The lists are posted, and the factors reviewed and compared. Factors may include: activie participation; being able to use a number of senses; teaching someone else; practice; relaxation, and flowing with the task; support and patience from peers or instructors; success; adequate time. The commong factors may be circled, or written on a separate sheet, or on a chalkboard.

4. (15 minutes) A talk is given on the process of adult learning. (An option is to distribute, and have the Trainees read copies of pp. 1-11 in Ingalls.) The talk should include information concerning the purpose of education, the differences between andragogy and pedagogy, and the applications and benefits of andragogical learning.

Previous Page Blank

5. (10 minutes) The Trainer leads a general discussion about the principles of learning presented during the session. A brief summary should include:

An emphasis on the correlation between effective learning experiences in the past and the methods of education stressed throughout this training program.

A statement of the potential applicability of experiential learning during the Trainees' future service as appropriate technology extensionists.

SESSION 5
Communication and Listening Skills

Time: 1 hour 45 minutes

Objective: The Trainee will develop and demonstrate effective consultative skills essential to the analysis and assessment of local community needs, and to the development and extension of locally appropriate technologies.

Overview: A positive consulting relationship is at the base of effective community development and appropriate technology extension efforts. Technical expertise must be complemented with a variety of communication skills in order that community needs are met in a way that promotes local self-reliance and decision-making. In this session, the Trainees are provided with the first of many opportunities throughout the training program to develop and practice listening, counseling, and observation skills that will be useful, and will enhance their abilities as appropriate technology extensionists.

Suggested Resources

Ingalls, *Andragogy*, pp. 164-174.

Brownlee, *Community, Culture, and Care*, 15-22.

VIA, *The Transcultural Study Guide*, pp. 12-18.

Materials Needed: Chalkboard and chalk, or newsprint and markers.

Procedure

1. (15 minutes) An overview of the session is presented, and the Trainer gives a brief talk about the importance of consultative skills and effective communication during extension work (Ingalls, pp. 164-172). The following talk may be included:

> Effective communication underlies all mutually supportive relationships--in personal life, in the work environment, and in formal as well as informal counseling situations. However, it takes practice to develop the skills necessary for helpful, non-threatening interactions. Perhaps the most important aspect of counseling is to be a good listener: that is, one who listens *actively*; knows how to interview *unobtrusively*, and can provide accurate *feedback* to the person being interviewed. Interpersonal communication involves complex dynamics on both the verbal and non-verbal levels; and if there is distortion in either sending or receiving the intended message, then misunderstanding and a breakdown in communications invariably will result. A method of reducing distortion, is termed *feedback*: that is when a person responds to the sender of a message in a way that expresses how it was received. It is important to realize that feedback must be natural--not forced or imposed: and it must be based on mutual

trust so as not to be threatening. Feedback reflects *perceptions* of behavior, and is only a measure of the way in which a situation is viewed. It should be clear, specific, and related to the situation at hand; and it should be descriptive and potentially helpful, in a way that the receiver may decide either to use it or not. Feedback serves to clarify communication so that the helping relationship is enhanced through accurate perceptions of the concerns and problems being discussed.

2. (5 minutes) The Trainer shows a picture that may be interpreted in two ways, and the Trainees are given 30-60 seconds to study it silently, saving their observations for later discussion. Two volunteers are requrested to sit in the center of the room, where they may be seen by all, and to describe to each other what they saw. (The picture is a composite of the faces of an old woman and a young one. See p. 170, Ingalls.)

Note: Both may have seen the same face, or have a differing view.

When their discussion ends, the Trainer asks the other Trainees for their observations about the picture, as well as their perceptions of the kinds of communication that took place, and the feedback that was given. The picture should be shown again, at the end of a few minutes.

3. (5 minutes) The Trainer summarizes the exercise by discussing the following information:

> What one person sees as real, or "really there", is a function of what is believed to exist. Often, our own individually or culturally defined perceptions are not shared by others: this can be interesting, humorous, confusing, frustrating -- and in a helping relationship, potentially disastrous. In effective consultation, especially in a cross-cultural context, it is crucial to understand what the other person perceives as real, in order to accurately assess needs and wants, and to constructively guide the person to work toward self-initiation, positive changes and solutions.

4. (10 minutes) Based on the observations made during the previous exercise, the Trainer asks for factors that enhance and impede effective communication. These should be listed in two columns on chalkboard or newsprint. Some factors may include: eye contact (or lack of it); body position; attention span of the listener and the speaker; interruptions; nervous habits; responses to comments or questions.

5. (20 minutes) When a list has been compiled of factors that help and hinder effective communication, the Trainer explains that the Trainees will observe a demonstration of active listening skills. The procedures are:

Three chairs are placed in the center of the room, or where they may be easily seen by all.

The Trainer asks for two volunteers to help demonstrate active listening skills..

One person (the "client" is asked to speak briefly (30 seconds) about an aspect of the training program that is the most or the least appealing.

The other volunteer (the observer) is asked to interrupt at the end of 30 seconds.

The Trainer and the "client" sit facing each other, as the "client" talks.

When the observer interrupts, the Trainer repeats, or paraphrases closely, what the "client" has said.

The "client" is asked if what the Trainer has repeated is an accurate reflection of what was originally said.

The Trainer asks both the volunteers for feedback concerning listening style, and any factors that impeded or enhanced communication. Other Trainees may wish to give observations, comments, or questions.

When the discussion ends, another volunteer takes the place of the Trainer, and the process is repeated, with the original "client" or the observer playing the part of the listener, or "consultant".

6. (25 minutes) The Trainees form groups of three, and practice the roles of active listener, "client", and observer. The procedures are:

The person who is the "client" speaks for 30 seconds in a brief, clear manner about some aspect of training, or about a personal concern.

The observer notes the interactions between the listener and the speaker, both on a verbal and nonverbal level; observations should be made about the level of communication that exists.

The "consultant" listens, then provides a repetition or a paraphrase of what the "client" has said.

The "client" gives feedback to the "consultant" concerning the accuracy of the paraphrase.

The observer presents any findings; the three participants discuss the exercise, and give feedback.

The roles are changed, and the process repeated, until all three participants have played each part.

7. (15 minutes) The entire group assembles, and the Trainer reviews the lists of factors that impede and enhance communication. Based on the listening exercise, additions to the compilation are noted. Some questions for discussion include:

What are the most influential factors that block or help communication?

What kinds of improvement are necessary to gain effective communication skills?

How can this practice be applied to help during community assessment activites? during Peace Corps service?

What problems and solutions were discussed during the exercise today? was there any resolution?

SESSION 6
Cultural Values Clarification

Time: 2 hours

Objective: The Trainee will examine and analyze a number of representative cultural values found in the U.S. that are not necessarily reflected in other societies; and throughout the program will demonstrate an understanding of the ways in which such values may influence appropriate technology extension efforts.

Overview: In order to understand the potential impact of technological innovation, it is first necessary to understand individual perspectives, assumptions and values that are shaped by cultural realities. In this session, the Trainees view and clarify their own thoughts about traditional U.S. cultural values, especially insofar as technology and energy uses are concerned. During the values clarification exercise, an opportunity is provided to practice and examine the process of consensus decision-making and group dynamics.

Suggested Resources

Arensberg, Conrad M., and A.H. Niehoff, *Introducing Social Change*, New York: Aldine; 1971; pp. 107-231.

Foster, George, *Traditional Societies and Technological Change*, pp. 25-41.

Warpeha, Paul, *Perceptions of Technology: A Study of the Iluman Project*, pp. 27-51.

Attachment I-6-D : Cultural Values Clarification Sheet

Materials Needed: Newsprint, markers.

Procedure

1. (15 minutes) Cultural Values Clarification Sheets (Attachment I-6-D) are distributed, the instructions reviewed, and the exercise completed.

2. (30 minutes) The Trainer reviews the values clarification exercise with the Trainees. A discussion should focus on the following information:

The way in which we view the world is based upon various assumptions, folk ideas, and premises implicit in our cultural framework. Although such beliefs may explain the world in a logical and understandable manner, people in other cultures often base their worldview, or perceptions of reality, on an entirely different set of beliefs. Each point of view is logical, and equally valid.

The Cultural Values Clarification Sheet contains a number of statements reflecting various traditional beliefs, assumptions, and premises that exist in both the U.S. value system as well as in other cultures. For example, the Western perception of nature is closely tied to the Judea-Christian tradition, which holds that humans were created above all other natural beings; nature, created separately, was of secondary importance. Based on such perceptions, the Western world has long viewed nature as an obstacle to be overcome, or a force to be controlled in the advancement of technological or human progress (see statement #1 in the Cultural Values Clarification Sheet). One of the traditional values in our culture implies that nature is to be controlled for the benefit of people. However, in many parts of the world, people view nature and humanity as one. There is often an abiding belief in the spirits of nature, and in the importance of maintaining the balance of natural forces; people must work with nature, rather than attempting to conquer it for their own benefit.

In the U.S., human potential is considered by many to be virtually unlimited: the abundant human and natural resources opened the "land of opportunity" to the "great American dream". National goals and aspirations embrace universal education, unlimited economic growth, and zero unemployment. Whether those dreams are attainable has little bearing on the attitude that has been nurtured in the U.S.: that all things are possible, if the effort is put forth. The great advances in science and technology reflect the potential of human knowledge (see statements #6 and #12). Although it may seem extreme to assume that science will inevitably solve humanity's problems, it is within the realm of possibility to predict certain technological advances, such as solar energy utilization.

For people in much of the developing world, centuries of colonial oppression, and crises of recent years have not reinforced any feelings of optimism. In fact, what may be considered by some to be incredible technological advances, are received in developing countries with a certain passivity, and even nonchalant acceptance. With limited land and resources, however, it is difficult to muster the confidence or the great effort necessary "to get ahead" (see statement #3).

In the U.S., an emphasis is placed on the ideals (if not the realization) of racial, ethnic, and sexual equality, and of the universal right to education (see statements #5, #7, #11). In much of the world, one's role and station in life is clearly defined, and is not open to change or drastic modification (see statement #10). In the U.S., knowledge is viewed as an open system. People are encouraged to reason logically,

to be inquisitive, and to be skeptical of pat, authoritative answers; nothing should be taken for granted, regardless of the source (see statement #9). However, in many countries, the educational system is closed; it is based on classical teachings and theories that are not to be challenged. One's title, position, and ability to memorize information is the mark of education and competence (see statement #2).

In the U.S., judgments are made in distinct, two-fold, often moralistic terms: right/wrong; moral/immoral; legal/illegal; successful/unsuccessful (see statement #8). In other cultures, opposites are often viewed as neither superior nor inferior, rather as natural balances to two sides of an issue.

The U.S. cultural value system emphasizes humanitarian goals (see statements #4 and #13). Although efforts are often misdirected or misunderstood, people in the U.S. respond readily to provide food, clothing, and other support to victims of disasters. However, such efforts are usually institutionalized, rather than personalized, as they are in other cultures.

During the above discussion, the Trainees should be encouraged to participate and make comments, observations, and conclusions.

3. (10 minutes) The Trainer guides the development of a list showing at least 10 categories of energy usage in the U.S. (This list should be written clearly on newsprint or a chalkboard as ideas are generated.) Categories include: transportation; food production, processing, and distribution; health systems; shelter; recreation; communications; water and waste systems; industry; mining and natural resources; education.

4. (10 minutes) A scenario is presented that describes an energy crisis. For example:

There has been a severe cutback in the importation of petroleum products to the U.S. Gasoline costs over $4.00 a gallon--when available. There is insufficient heating oil, and electricity costs have nearly tripled in the last year. Power failures have become common in homes, offices, hospitals, schools, and factories. Food prices have skyrocketed, and once-plentiful produce is now scarce because there is little petroleum-based fertilizer; transportation costs have become prohibitive. Everything is more expensive than it was even a month ago, and the unemployment rate climbs higher with the passing days. You have been appointed to a citizen's planning commission authorized by the powers-that-be. What are the immediate priorities for energy consumption?

The Trainees, on an individual basis, are to rank the categories indicated on the posted list, according to the highest and lowest priorities for dealing with the energy crisis.

5. (20 minutes) Groups are formed of 4-6 people, and are instructed to once again rank the energy use categories according to priorities. The ranking should be done according to consensus decision-making techniques.

6. (20 minutes) When the groups have completed the re-ranking exercise, the Trainer instructs them to evaluate the process of group decision-making, utilizing the following questions:

Which energy usage was the most controversial? How was the controversy resolved?

What role did each group member play in the discussion.

On what issue was there the most agreement?

What techniques were most useful in reaching consensus? the least?

7. (15 minutes) The groups report on the discussions and decisions. Questions for discussion are:

- What differences were noted in the individual and group rankings?
- What similarities exist between individual conclusions and those of the group?
- What similarities and differences exist among all the groups?
- What conclusions may be reached concerning energy usage and priorities?

SESSION 7
An Experiment in Communications: Hollow Square/Tool Box Construction

Time: 2 hours

Objective: The Trainee will study the dynamics involved in the planning and implementation of a task, and will examine communication behaviors that influence the effective and satisfactory completion of a project.

Overview: Using the principles of the Hollow Square communications experiment, the Trainees observe and examine the relationship between planners and implementers, and participate in the accomplishment of an assigned task. Through a comparison of communication styles, an opportunity is provided to analyze the importance of group dynamics in the planning, implementation, and evaluation of a task or project.

Suggested Resources

Pfeiffer, William, and John Jones, editors, *A Handbook of Structured Experiences for Human Relations Training, Vol. 1* pp. 32-40.

Ingalls, John D., *Andragogy*, pp. 147-154.

Materials Needed: Instructional sheets and packets for the Hollow Square simulation (see Ingalls, pp. 147-154; or Pfeiffer and Jones, pp. 32-40); large round tables around which the participants may work; pencils; paper. The facility should include one room (or space) large enough to comfortably accommodate the individual groups; and two other rooms where the planning and operating teams can work alone. Additional, optional materials for toolbox construction: 10-15 pre-cut wood pieces, hammers, nails, tape measure, square.

Note: This exercise is easily adapted for another activity, such as the construction of toolboxes to be used during training. In that variation, approximately 10-15 pieces of wood (per group of operators) are pre-cut, and a previously assembled toolbox is used as a sample. However, the operators should not see the finished toolbox; it is for the use of the planners. It is important that the Trainer(s) be familiar with the methodology of the exercise before presenting any procedures to the Trainees.

Procedure

1. (15 minutes) The Trainer describes the activities for the session, and facilitates the formation of the Trainees into three groups of four people: the Planners, the Operators, and the Observers. If there are more than 12 people (the minimum is 12), there may be additional observers; or, multiple groups may be formed of at least 12 participants each.

The Trainer should direct the activities, and:

Select 4 people to be the planning team, and send them to another room to wait.

Select 4 people to be the operating team, and give to each a copy of the *Operating Team Briefing* sheet (pp. 39, Pfeiffer and Jones), and send the team to a separate room. The room should be comfortable, because the team will have a waiting period.

Designate the rest of the participants as the observation team, and distribute the *Observer Briefing Sheet* (p. 40, Pfeiffer and Jones). Each observer is instructed to select one member from each of the two teams to observe. The observers then gather around the table where the other teams will be working; they should silently observe, take notes, and be ready to discuss the results of the experiment.

Bring in the planning team, and have them gather around the table. The *Planning Team Briefing Sheet* and an envelope are distributed to each member (pp. 34-37, Pfeiffer and Jones) The team is told that all instructions are contained on the briefing sheets, and that no other instructions are necessary.

When all the teams have been instructed, and the observers cautioned to remain silent and to not offer clues, the experiment begins.

2. (25 minutes) The Planners develop their own methodology to explain the construction of the Hollow Square (or tool box) to the Operators. If the tool box is to be constructed, the words "box" or "tool box" should not be used in the explanation to the Observers, nor should a set of plans be included.

The Operators prepare for the task by discussing the ways in which information will be received and used, and ways that the group will make decisions, e.g., by concensus, individual, handclasp, etc.

Using a prepared observation sheet, the Observers record the interaction of the planning team.

3. (10 minutes) The Planners present instructions and methodologies to the Operators.

4. (25 minutes) The Operators assemble the design, while the Observers note the interactions.

5. (15 minutes) After the planning and operating teams have performed the tasks as directed on the instruction sheets, the Observers meet with the two people they observed to give feedback.

6. (30 minutes) When the exercise is completed, the group assembles to discuss the activities, and share observations. The

Observers should comment on the general pattern of communication in each group, and cite specific examples that illustrate the observations. The Planners and Operators should also report on any observations, as well as reactions or responses to the Observers' comments. As the discussion proceeds, the Trainer notes key observations and points, including problems that arise when one group makes plans that another group must implement; and the difficulties encountered when one group must carry out plans that others have devised. As the discussion nears a close, the Trainees are encouraged to make some concluding remarks about the planning and implementation processes in regard to development.

SESSION 8
Assessing Community Needs: Part I

Time: 2 hours

Objective: Same as *Session 2*

Overview: An opportunity is provided for the Trainees to further formulate, then implement their plans to obtain information concerning the ways in which basic needs are met in the local community.

Resources: Same as *Session 2*

Materials Needed: Pens, paper.

Procedure

1. (10 minutes) The Trainer briefly reviews active listening skills, and their potential use during interviewing members of the local community.

2. (20 minutes) The groups discuss and modify their plans to obtain additional information about one aspect of the community that is related to meeting basic needs; then divide the various tasks among group members. The Trainer should review each plan before the Trainees begin the next activity.

3. (1 hour 30 minutes) The study groups go into the community and interview the people that have been identified in the plan as important sources of information.

Note: This session may be held as the last of the day, so that the Trainees may utilize extra time, if needed, to continue interviews and information gathering.

The Trainees should meet before *Session 16* to review their findings, and to discuss the following questions:

What technologies were used to meet the basic need that was researched?

What relationships were found between the need that was studied, and other basic needs in the community?

What potential (or real) community concerns or problems were recognized during the course of research?

How did you function as a group? as individual interviewers?

What did you learn about effective methods of community assessment?

Previous Page Blank

SESSION 9
Global Energy Issues: An Introduction

Time: 3 hours

Objective: The Trainee will identify and analyze global energy issues, and will develop and demonstrate an understanding of the ways in which appropriate community technologies can effectively work to address the concerns inherent in such issues.

Overview: The issues central to global energy are many and complex; they are at the crux of much current dissent and crisis in the world. An understanding of those issues is crucial to the appropriate application of technologies that are based on renewable sources of energy; without correlating the effect of one issue upon another, there can be no effective solutions formulated. Early in the program, the Trainees are presented with a number of issues and concerns facing the world. Throughout the training, they are encouraged to think about, and analyze issues related to energy in terms that are meaningful, and within the context of rural community realities. In this session, the Trainees begin to develop a deeper awareness of the serious nature of global energy issues through first examining individual perceptions, and then analyzing potential solutions to critical problems and world-wide concerns.

Suggested Resources

Katz, D., et.al., *Food: Where Nutrition, Politics, and Culture Meet*, pp. 151-155; 187-189. (pp. 183, 185, 186 may be used as handouts.)

Eckholm, Erik, *Losing Ground*.

Volunteers in Asia, *The Transcultural Study Guide*, pp. 139-140.

Scientific American, *Energy and Power*, 1971; San Francisco: W. H. Freeman.

Crabbe, David, and Richard McBride, *The World Energy Book*, 1979; Cambridge, MA: MIT Press.

Fritsch, A., et.al., *Food and Energy*, CEP, 1413; K St. N.W., Washington, D.C. 20005; pp. 62-71.

Attachment I-9-E : Global Energy Issues - Illustrative Charts

Attachment I-9-F : Global Energy Questionnaire

Attachment I-9-G : The Petroleum Palace Restaurant

Materials Needed: Chalkboard and chalk, newsprint and markers; pens and paper.

Previous Page Blank

Procedure

1. (5 minutes) The objective is stated and an overview of the session is presented.

2. (25 minutes) The Global Energy Questionnaire (Attachment I-9-F) is distributed and its purpose explained. The Trainees are instructed to complete it, by following first thoughts. It should be re-stated that the Trainees are not expected to know all the answers to the questions; and that in Part II, there are no right or wrong answers.

3. (30 minutes) The Questionnaire and the answers are discussed. The following questions may stimulate a discussion of Part I (factual answers):

Which answers were surprising? Why?

What are the explanations and implications behind the facts?

What other facts would be interesting to know?

Some questions for discussion on Part II (attitudes) are:

On which answers would there be the most agreement among the U.S. public? why? most disagreement? why?

Which statements provoked the strongest reactions? the most uncertain reactions?

(Concerning question #9) Will problems be different in developed and developing countries? for rich and poor?

What problems will be shared by most of the world's people?

4. (15 minutes) The charts and graphs illustrating global energy issues (Attachment I-9-E) are distributed and discussed.

5. (20 minutes) The Trainees form groups of 4-5 people, and each group is given a sheet of newsprint and markers. Each group is to generate a list of critical issues that will face the world in the 21st century. The group should come to consensus on 3-4 of the most pressing issues, which are written on the newsprint, and posted on the wall.

6. (10 minutes) The Trainees circulate to view the lists, and identify common issues. During this time, the Trainer should make a compilation of the issues appearing on a number of lists, and post it for later use.

Note: A break may be scheduled before the next activity.

7. (20 minutes) The entire group assembles, and Attachment I-9-G: The Petroleum Palace Restaurant, is distributed and reviewed. The Trainees complete the exercise, according to instructions. When the "meal" has been selected, the Trainer indicates the cost per item, and each person tallies their "bill" for the meal chosen.

8. (30 minutes) The selections are compared, within the context of the relative energy "cost" of each item. "Suggestions for Reducing Energy Consumption" (p. 155, Katz), and "The Food-Energy Chart" (pp. 62-71, Fritsch), may be distributed and used to stimulate discussion of the following points:

- The consequences of high energy use in the food system.
- Ways of eating an "energy-cheap", nutritious, and appealing diet.
- Options for farmers, food manufacturers, grocers and cooks for ways to provide the consumer with "energy-cheap" nutritious foods.
- Forces that encourage eating low-energy-cost foods.
- Forces that restrain the "food industry" from providing low-energy-cost foods.
- Implications for developing countries.

9. (20 minutes) The original groups re-form; using the posted list of critical energy issues, they compile a list of ways in which appropriate community technologies potentially can help address those concerns. The suggestions should be as specific as possible, and within the realm of solutions that are energy efficient, environmentally sound, economically and culturally viable, and that address basic human needs.

10. (15 minutes) A representative from each group reports on the suggestions, observations and comments noted during the activity.

11. (10 minutes) The results are discussed; and comments and observations concerning energy issues are summarized.

SESSION 10
The Environmental Impact of Development

Time: 1 hour

Objective: Through an examination of illustrative development scenarios, the Trainee will analyze and discuss the types of environmental impact that would result from the implementation of various technological development strategies.

Overview: Since the development process involves environmental, as well as technological changes, it is helpful to gain perspective on the ecological consequences of various programs and strategies for technological innovation. Therefore, the Trainees are provided with the opportunity to examine articles that deal with the environmental impact of technology. They prepare for a panel discussion, during which cases will be presented for and against a number of strategies, and the merits and disadvantages of each will be analyzed.

Suggested Resources

Svedin, Uno E., "Technology, Development and Environmental Impact", in *AMBIO: The Journal of the Human Environment*, Vol. 8 #2-3, 1979; pp. 48-101; Sweden. (Handout)

Procedure

1. (10 minutes) The handout, "Introduction to the Scenarios" (Svedin, pp. 48-51) is distributed and read.

2. (15 minutes) The points presented in the reading are clarified and discussed.

3. (15 minutes) The Trainer describes the format for the following day's panel discussion. The Trainees are asked to form 5 groups of 3-5 people. Each group is given information concerning one of the 5 Scenarios (Scenario 1, pp. 52-59; Scenario 2, pp. 60-71; Scenario 3, pp. 72-83; Scenario 4, pp. 84-91; Scenario 5, pp. 92-101), which include an overview of the scenario and environmental cases for and against it.

   One group member will serve as facilitator and time-keeper. It is this person's responsibility to introduce and describe the scenario, ensure that the discussion stays within the allotted time (30 minutes), and moderate during the proceedings.

   One to three group members will take the position in support of the particular scenario.

   One to three group members will take the position against the form of development presented in the scenario.

Previous Page Blank

It is suggested that the people presenting supportive as well as negative arguments in the scenario take the point of view of an individual directly affected by the development strategy. For example, a supporter of local, indigenous control of small-scale technology might well be a rural peasant; one opposed to such control might be an importer of tools and foreign construction materials. However, a low-income factory worker might support increased development by multi-national corporations because a steady job is a perceived benefit; a community organizer or labor organizer might oppose the multinational because of the negative implications for local self-reliance.

When the panel meets for the discussion, the moderator introduces each person according to the role and point-of-view to be taken.

Each scenario will be presented and discussed within 30 minutes as follows:

Introduction by moderator	3-5 minutes
The case for the scenario	5-8 minutes
The case against the scenario	5-8 minutes
Questions from the audience and open discussion	10 minutes

SESSION 11
Communication of Technical Information: Insolation Meter, Part I

Time: 2 hours

Interim Objective: Given the necessary tools and materials, the Trainee will construct a simple insolation meter that is well insulated and sealed, painted properly, and is easy to read.

Overview: The process of transmitting technical knowledge is a basic component of appropriate technology extension; however, unless the information is communicated in a clear, concise, understandable manner, it serves little purpose. In order to develop effective communication skills, the Trainees are provided with the opportunity to serve as "facilitators" and "receivers" during activities that focus on acquiring certain technical skills. In this session, the Trainees practice by beginning the construction of a simple insolation meter, a device to measure solar radiation.

Suggested Resources

Baer, Steve, *Sunspots*, pp. 118-125.

Task Analysis: Insolation Meter, page 115

Materials Needed: 20-liter can, rigid insulation material, paint, glazing materials (preferably glass), copper tubing, tape or fasteners for glazing.

Procedure

1. (5 minutes) The Trainer gives a brief overview of the session, including the following information:

   The PCV often serves as a conduit through which technical information passes to informally-educated rural villagers; the Volunteer may interpret and channel research data, indigenous designs from other countries, and/or general scientific or technical principles. In this sense, the appropriate technology extensionist is a facilitator, one who assists people in the consideration and utilization of new techniques and information that may serve to address basic community needs. However, to be a facilitator requires the ability to communicate technical information in a clear, concise manner, without assuming the role of "expert" -- or, at the other extreme -- the role of one who is unsure or who appears to know little or nothing about technical data.

2. (5 minutes) The Trainees form groups of 3-5 and select a person to serve as facilitator. The facilitator will be responsible for transmitting technical information from the Trainer to the rest of the group members; however, it is not necessary that this person have high technical skills.

3. (20 minutes) The Trainer meets with the facilitators, and provides each with information necessary to build the insolation meter. (The procedures for construction are based on the Insolation Meter Task Analysis, page 115). A model of the device may be used to explain the procedures, or it may be done orally. The facilitators are told that, for this session, the meter should be built to the point of final assembly, including preparing and painting the can, assembling the insulated box, and preparing any other materials. (The final assembly will take place in *Session 14*.) The facilitators may record the information in any way they choose. When they adequately understand the plans for the meter construction, they return to their groups with materials provided by the Trainer, and assist the others in building the meter.

4. (1 hour) The Trainees construct the insolation meter on the basis of the information given them by the facilitator. The only information the group has about the function of the insolation meter is implied by the name. The group should speculate, while constructing the device, as to how it is used and the nature of the information it monitors.

5. (30 minutes) Each group evaluates the session. Some questions for discussion are:

> What differentiates the way in which technical information is transmitted from other types of communication?
>
> What was the facilitator's role in the group? How did it feel to be in that role?
>
> How did the other group members relate to the facilitator?
>
> What was the most difficult aspect of being facilitator?
>
> Was the technical information relayed in an accurate, clear, and concise manner?
>
> What communication techniques were the most successful? the least?
>
> Did the person in the facilitator role act in a way that was different from his or her normal behavior? How?

SESSION 12
An Exercise in Problem-solving: Formulating a Plan for Well-being

Time: 2 hours

Objective: Provided with information concerning commonly occurring sicknesses and other symptoms of ill health, the Trainee will formulate a comprehensive plan for maintaining and restoring physical, mental, and emotional well-being that may be utilized during both training and future Peace Corps service.

Objective: Presented with appropriate models and techniques, the Trainee will develop and demonstrate effective methods of problem-solving in order to address issues, resolve conflicts, and meet challenges in various aspects of the training program.

Overview: Basic to effective overseas development work is the ability to solve problems creatively; it is also of vital importance to be able to maintain personal well-being. Both themes are addressed in this session, as the Trainees acquire the skills and knowledge necessary to develop viable solutions to a variety of concerns, including that of staying healthy in new, and often different environments.

Suggested Resources

Pfeiffer, John and J. Jones, *A Handbook of Structured Experiences for Human Relations Training*.

Attachment I-12-H : Problem-solving Worksheet

Ingalls, John, *Andragogy*, pp. 38-45; 145-146.

Samuels and Bennett, *The Well Body Book*, pp. 1-15; 105-112.

Werner, David, *Where There is no Doctor*, pp. 233-244; 140-216.

Materials Needed: Newsprint, markers, pens, paper.

Procedure

1. (30 minutes) A model for problem solving is presented and demonstrated, using as an example a mutually identified problem or concern in the training community. The demonstration may be introduced as follows:

> Buckminster Fuller said that a problem well stated is a problem solved. In order to state a problem completely and well, as much relevant information as possible must be gathered. The following model is designed to assist in the definition of the problem, the examination of all its aspects, and an acceptable resolution to the conflicts and challanges presented by it.

In the model, first the *original problem* is stated; this may also be a goal, objective, or issue.

Then, the *factors* relating to the problem are listed. The problem may be defined as a temporary equilibrium between factors that move toward change, and those that restrain it. In order to solve the problem, the equilibrium, or tension, must be broken. The equilibrium may be likened to a force field: the problem is held static between opposing forces that push and pull. (Additional information concerning force field analysis is presented in Training Experience #40: Pfeiffer and Jones.) All factors are listed that have any bearing on the problem; one list notes the driving forces toward resolution, and another notes factors that serve as restraining forces. The journalistic "w's" are useful in identifying the factors: who, what, why, where, when and how.

The *problem redefined* or *restated* is considered next. After all the factors both for and against resolution are identified, the *real* problem may emerge. This may be a simple restatement of the original problem, or it may be another problem entirely, based on new information provided by examining the various factors.

Many and different *ideas* are generated by brainstorming. That is, all ideas, suggestions and possible solutions are listed without discriminating among them; these serve to either increase the forces driving towards resolution, or decrease the restraining forces. The brainstormed list may be comprised of logical, sensible ideas as well as those that seem crazy or not at all feasible. It should be remembered that most of the important or major inventions of the world had their origin in a "strange" idea that somehow worked! Therefore, judgment should be suspended during this phase, and all creative suggestions listed, regardless of their initial appearance.

To devise a *solution* to the problem, a selection and comparison of the various ideas are made; thus concrete and potentially viable solutions are generated.

Each potential solution is evaluated to determine its *acceptance* by those affected by it. If the solution is not acceptable, another solution must be tried; if it is viable, then it is implemented, and the problem has begun to be resolved.

One way of remembering this model is to term it the OFPISA (as in the leaning tower):

O - Original problem
F - Factors
P - Problem Redefined
I - Ideas
S - Solutions
A - Acceptance

When the Trainer has reviewed the problem-solving model, it is

demonstrated to resolve some problem, concern, conflict, or issue identified by the Trainees.

2. (1 hour) The Trainees are given the problem-solving worksheet (Attachment I-12-H) and are asked to form pairs for this activity. Using the OFPISA model, each Trainee identifies a problem that relates to personal well-being during training or future Peace Corps service; this should be something that is a current concern. The Trainees work together to mutually solve the problem or concern of each, following the guidelines established for effective consultative skills (see *Session 5*). At the end of 30 minutes, the Trainees should switch roles, so that both have the opportunity to consult, as well as be helped.

3. (15 minutes) The Trainer asks for a volunteer to share a problem and resolution from the previous activity. Observations about the technique should be encouraged, and any questions concerning the model answered.

4. (15 minutes) The Trainer emphasizes the importance of maintaining well-being during training and throughout Peace Corps service, and states the objective for developing a plan for personal health maintenance. (The plan will be reviewed during Phase II, Session 2.) Using the OFPISA model, the Trainees are instructed to formulate a comprehensive plan for well-being that includes the following:

- mental, physical and emotional components
- potential problems or concerns that must be resolved for improved health
- ways in which specific health problems will be resolved, e.g., go to a doctor, treat alone, use a local indigenous practioner.

It may be helpful to answer the following questions during the development of the plan:

What are the symptoms of illness?

What are the characteristics of a person in good health?

What changes are necessary in lifestyle to promote better health?

What illnesses or diseases are likely during training or Peace Corps service?

If there are questions, they should be answered at this time. If time remains, the Trainees may begin working on the assigned plan. At the end of the session, the readings in Werner (pp. 140-216; 233-244) and in Samuels and Bennett (pp. 1-15; 105-112) are recommended as helpful for completing the plan for well-being.

SESSION 13
The Environmental Impact of Development: Part II

Time: 3 hours

Objective: See *Session 10*

Overview: Groups of Trainees each present a panel discussion on the environmental impact of one of five scenarios on technological development. The cases for and against each development strategy are presented from the viewpoint of individuals directly affected. In a general discussion following the presentations, the Trainees theorize the most appropriate and probable development plans for application in developing countries.

Suggested Resources: Same as for *Session 10*

Procedure

1. (5 minutes) A brief overview of the session's activities is given, and the guidelines for the panel discussion are reviewed (see *Session 10*). The panel participants should be encouraged to discuss the general environmental concerns within the context of their impact on the lives of the people affected by development strategies.

   Some questions that may stimulate discussion are:

   How are basic needs satisfied by the strategy?

   Who stands to gain from the particular form of technology and development?

   What factors would impede the realization of the strategy?

   What would be the resulting plight of the majority of the people affected?

2. (2 hours 30 minutes) The final panel discussions take place. The Trainees should be encouraged to be concise in their presentations, and to stay within the allotted time period.

3. (25 minutes) A general discussion among all panel participants focuses on determining which scenario, or combination of scenarios, would be the most appropriate and/or the most likely to be adopted in future world development efforts.

Previous Page Blank

SESSION 14
Insolation Meter Construction, Part II

Time: 1 hour

Interim Objective: The Trainee will place an insolation meter at a potential solar site, and will properly orient and tilt it to gain the maximum amount of solar radiation.

Overview: The Trainees continue to develop an understanding of the function of an insolation meter and the construction techniques necessary to build one. The meters are assembled and located at a sunny spot; then measurements are taken, and data collection for later use is begun.

Suggested Resources

Anderson, Bruce, *The Solar Home Book*, pp. 58-62; 81; 173-174.

Mazria, Edward, *The Passive Solar Energy Book*, 13-20

Baer, Steve, *Sunspots*, pp. 118-125

Task Analysis: Insolation Meter

Attachment I-14-I : Insolation Meter Data Collection Sheet

Materials Needed: Thermometer, tape (or fasteners), small blocks or bricks, scale (preferably metric).

Procedure

1. (30 minutes) Construction groups (from *Session 11*) complete the following tasks:

- Fill the cans 95% with water, and then seal.
- Insert the thermometer in the holder.
- Place the can in the insulated box.
- Weigh the meter, and record the weight in kilograms.
- Position and seal the glazing.
- Measure and record the area of the glazed aperture.

The Trainer assesses the work of the groups, using these criteria:

- the cans are properly painted
- the walls are tightly sealed
- the glazing is well-sealed and similar to the type that will be used on the solar devices
- the thermometer can be read either through the glazing (glass or clear vinyl), by briefly removing the glazing, or by using a probe thermometer to read the meter from the outside

Previous Page Blank

2. (15 minutes) The groups place their insolation meters in various spots around the training site. The meter should be positioned so that it receives the maximum amount of solar radiation. Once situated, the meters should not be moved.

3. (10 minutes) The Trainer explains the basic function of the insolation meter: It is a device which measures solar radiation in the form of heat stored in the water can. By observing and recording the change in water temperature (Δt) over a specified period of time, an approximate determination of the amount of solar radiation at a particular site can be made.

The Trainer distributes the Insolation Meter Data Collection Sheets (Attachment I-14-I) and explains how the data is to be collected.

Twice a day during the course of the program, the Trainees should record the date, weather conditions, time, and temperature. (The best times to record data are between 9-10 A.M. and 2-3 P.M.)

Note: This data will be analyzed and used for determinc insolation during *Phase IV, Session 2.*

SESSION 15
Women in Development: Changing Expectations for Women and Men

(Adapted from *Women in Development: A Volunteer Training Resource Book*)

Time: 2 hours

Objective: The Trainee will identify changing perceptions of men's and women's roles in the U.S., and will examine causes and factors that enable changes to occur in sex role values and expectations.

Overview: In order to provide a context for understanding differing cultural values and perceptions, it is necessary to examine individual perspectives and ideals. In the U.S., sex roles have changed markedly over the course of time; in fact, those changes have been reflected throughout the world, but often not nearly as rapidly, or as apparently as in this country. During this session, the Trainees compare past and present perceptions of men's and women's roles in the U.S., and identify underlying factors and causes that have contributed to, and sustained, change. Such analysis establishes a framework to begin interpreting other cultures, and the roles that men and women traditionally play within them.

Suggested Resources

Blumberg, Rae L., "Fairy Tales and Facts: Economy, Family, Fertility, and the Female" in *WID: A Volunteer Training Resource Book*, Session 1, and "International Exchange News, Winter 1977-1978", ibid.

Newland, Katherine, *The Sisterhood of Man.*

Materials Needed: chalkboard and chalk, newsprint and markers, pens, paper.

Procedure

1. (5 minutes) The Trainer gives a brief overview of the session, and a statement of the objective.

2. (15 minutes) The Trainees should get comfortable, and follow the Trainer's instructions:

> There are several parts to this exercise. In the first part, I would like you to close your eyes, and imagine that you are younger, still living at home, with your parents, or with the people who raised you. Try to imagine the surroundings--the rooms, the smells, the furniture. (The Trainer should allow a few moments before continuing.) Now, try to remember your mother, or grandmother, or aunt, or older sister -- a woman who was significant in your life. Think of how she spent her day, and the chores she did, the work she performed, either in the house or at an outside job, or both. When you have finished, open your eyes. (When all are ready, the

Trainer resumes.) Take a few minutes to jot down some of the things that the woman did. These do not have to be limited to work, or a job. Rather, you should jot down any impressions you have concerning what she did, or how she was, in your memory. (When the Trainees have finished, the Trainer once again begins.) Now, close your eyes again. This time, go back to the place you imagined before, and look around. Walk around until you find your father, or grandfather, or uncle, or older brother -- a man who was important to you when you were younger. What did he do with his time? What do you remember about his chores, his job, his life? When you have finished, open your eyes, and jot down your thoughts.

3. (10 minutes) When the Trainees have finished, the Trainer asks them to choose a partner and discuss each other's impressions. It is important to stress that no one should feel forced to share personal feelings that they would rather keep private. The purpose of this exercise is not to interpret or counsel; it is to review memories of past perceptions of women's and men's roles.

4. (15 minutes) Each pair joins another to identify role differences that reflect expectations or values regarding male and female roles. The impressions recorded in the first exercise should serve as a basis for the discussion. A list should be kept on newsprint to present to the larger group. Some differences that may appear are:

- women cook for the men
- men make the living for the women and children
- women stay home; men go out "with the boys"
- women expect men to take out the garbage
- men expect women to wash the dishes

5. (10 minutes) Each group presents the list generated. The Trainer should write key words or phrases that indicate conclusions, trends, or similarities among the various groups' perceptions.

6. (15 minutes) The groups re-form, and discuss *current* sex role expectations and values. These should be listed on newsprint. The group does not need to come to consensus; rather, the list should reflect a summary of each group member's ideas.

7. (10 minutes) Each group reports, and again, the Trainer writes key phrases or words that indicate current perceptions common to the group, or that appear to be mentioned often.

8. (15 minutes) The groups of four re-join, and develop a list of causes and factors underlying any changes that have occurred in women's and men's roles over the years. A recorder/reporter should keep notes as each group member offers comments. No consensus is necessary.

9. (15 minutes) Each recorder/reporter summarizes the group's list of factors and causes, and the Trainer writes major categories as a summary of the reports. Some items that may be listed are:

- educational opportunities
- affluence and an increasing middle class
- mass media influences
- legislation
- need for cheap labor
- changes in perception
- political power
- organizing
- egalitarian values
- smaller families
- labor saving household devices
- increased leisure time
- urbanization
- mobility
- war
- child care centers
- economic problems

10. (10 minutes) A summary is given of the changes that were mentioned, and the causes and factors that contributed. Any connections between factors and causes that are relevant both in the U.S. and in developing countries should be mentioned. For example, in developing countries, many women now work in factories (cheap labor) because they are able to leave their children in child care centers. They must work because economic conditions make it necessary, and increased urbanization and migration to cities promotes the movement of women into a cash economy. In areas where men have gone to cities or to war, women's roles also change. The discussion should form a bridge to the next sessions, where the issues raised will be more thoroughly examined.

SESSION 16
Community Assessment: Part II

Time: 3 hours

Objective: See *Session 2*

Overview: Based on analyses of local life support systems, the Trainees develop and discuss flow charts that indicate inter-relationships among various systems developed to meet basic needs in the community.

Suggested Resources: See *Session 2*

Materials Needed: Newsprint and markers

Procedure

1. (10 minutes) An overview of the session is presented, and newsprint and markers are distributed to each group.

2. (20 minutes) Each group, working cooperatively, develops a flow chart (see *The Integral Urban House*, pp. 10, 19, 27 for examples) that describes the basic need studied, in relationship to other community systems.

3. (20 minutes) Each group joins with another to compare flow charts; where applicable, the illustrations are modified to include new, or different information, based on the perspective gained through talking with others who have studied a different system.

4. (20 minutes) The original groups again join with a different group of people, and once again review and compare flow charts, making modifications and changes where necessary.

5. (15 minutes) The flow charts are posted and all the Trainees circulate to review them.

6. (20 minutes) The entire group gathers, and a discussion focuses on the following questions:

   What relationships do you perceive that were not shown?

   What improvements could be made in the charts?

   What did you learn about community needs and systems?

   What did you learn about group dynamics?

   What was the most difficult aspect of these activities?

   What role does technology play in meeting the basic needs of a community?

Previous Page Blank

What energy needs were identified that are not currently met? health needs? any others?

7. (1 hour 15 minutes) The remaining time may be used as follows:

   - Individual reading time

   - Pairs of Trainees re-enact interviews, and receive feedback and observations from the other Trainees

   - A master flow chart is developed and discussed, combining the other charts made during the session.

SESSION 17
Health in a Cross-cultural Context

Time: 3 hours

Objective: The Trainee will develop and articulate an understanding of the term "appropriate technologies for health" within the context of individual and cross-cultural perceptions of illness and well-being.

Objective: The Trainee will develop and articulate an understanding of the term "culture shock", and will recognize its symptoms, stages. and the types of behaviors necessary to deal with it effectively.

Overview: Individual perceptions of health influence many aspects of life overseas, including personal well-being, and the way in which the host culture is viewed. Through an examination of customs, beliefs, and practices common to people in the training community, the Trainees gain perspective on the variety and number of health traditions that exist in the U.S., and on the meaning of the term "appropriate health technologies". Various definitions and interpretations of health are presented and provide a context in which to focus on individual reactions to illness, stress, and culture shock. In this session, and throughout the program, the Trainees are encouraged to look at ways in which appropriate health technologies apply to their own health maintenance, their understanding of cross-cultural health traditions, and their role as appropriate technology extensionists.

Suggested Resources

Volunteers in Asia, *Transcultural Study Guide*, pp.133-138.

Samuels, M. and H. Bennett, *The Well Body Book*, pp. 1-3; 15-16.

Werner, David, *Where There is no Doctor*, Introduction; pp. 1-15; 17-19.

Brownlee, Ann, *Community, Culture and Care*, pp. 173-186.

Oberg, Kalvero, "Culture Shock and the Problem of Adjustment", in *Peace Corps Training Guide for Basic Health Training for All Peace Corps Volunteers*, OPTC/Peace Corps, Washington, D.C.

Foster, George, *Traditional Societies and Technological Change*, pp. 191-196.

Goldman, Laura, *Perspectives of Balance: A Study of Health Traditions in Iluman, Ecuador.*

Bloem, Kenneth, et.al., *The Proceedings of the Working Conference on Appropriate Technology in Health in Developing Countries*, Washington, D.C.: National Council for International Health.

Adapting Overseas in the Peace Corps, ACTION Pamphlet 4200.14, May '76.

Wingate, Peter, *Penguin Medical Encyclopedia*, England: Penguin Books, pp. 207-210.

Materials Needed: Chalkboard and chalk, newsprint and markers, pens, paper.

Note: Before this session, the Trainees should read at least one of the articles on culture shock (Foster, Oberg, ACTION pamphlet), and Werner, and Brownlee.

Procedure

1. (15 minutes) As an introduction to the session, the Trainer presents a short talk concerning the objectives and goals of the health and nutrition component of the Training Program. The following material, as well as the introductory material on pp. 1-10, may be used:

> Basic to every society are shared perceptions about well-being and illness that comprise the knowledge applied when a member of the group becomes ill or is believed to be in a vulnerable state of health. Such perceptions are highly valued in every society, and vary according to individual cultural norms and realities. When the term *appropriate health technology* is used, it refers to any means, device, or system that is culturally acceptable, believed to be medically effective--by both the practitioner and the patient--and which serves to promote, improve, maintain or restore well-being. It is important that an *appropriate* technology extensionist recognize different perspectives of health as valid, integral parts of culture, and respect the tradition they represent. For a development effort to be appropriate, it is crucial that there be an understanding that the concepts and customs regarding health and nutrition are intimately related to every other component of the total culture; there can be no separation of one part from the whole. The issues of development--including technology, health and nutritional status, participation and integration of women, the role of the extensionist--are all inter-related, and any change in one area ripples out to affect all others.
>
> It is necessary in a program of this type, that a broad background in related development issues be provided, and that adequate health and nutriton information -- especially in a cross-cultural context -- be made available to future appropriate technology extensionists. Given the emphasis on *alternative* and *appropriate* technologies, the health and nutrition component must reflect deep concern with the relationships between technology and health status, and with women and health, particularly the impact of change upon women and children in the developing world, and the important role that women play in determing and maintaining family and community well-being.

An appropriate health/nutrition education component should emphasize the cultural relativity of what constitutes appropriate knowledge, attitudes, and applications; it should focus wherever possible on the relationships between health and technology, and environment and development, in order to facilitate providing the type of assistance that fosters community self-reliance and self-determination. Perhaps most important, it should instill a sense of understanding how basic and universal is the need to maintain well-being, and how connected it is to every aspect of life.

2. (10 minutes) The Trainees form small (2-3 people) groups, with other Trainees that they do not know very well, or that they believe may have a different perspective on health. The groups are asked to select a reporter, and are each given a sheet of newsprint and a marker. The following brief introduction may be used:

Just as perceptions of health vary from culture to culture, there are often variations within a particular society. We have all grown up with certain beliefs concerning illness and well-being; some of our childhood perceptions are now considered superstitions, tales, and quaint customs. There are other beliefs that we still hold as valuable, some of which are considered medically sound, and others -- their origins forgotten or of doubtful effectiveness. It is interesting to compare beliefs with those held by other people. Often, what one person considers superstition, is another person's inviolable truth. (The Trainer should encourage the Trainees to cite some examples, or provide one or two, e.g., feed a cold, starve a fever; put steak on a black eye; cover your mouth when you cough; don't swim after eating; frighten someone to cure hiccups; wear a copper bracelet to cure arthritis.)

The following guidelines should be posted and reviewed before the activity:

Generate a list (by brainstorming) of as many health beliefs, customs, superstitions and practices as possible. Either the recorder may write them down, or each group member may keep a separate list. All ideas generated, either currently believed or not, should be listed.

From the above list, identify, as a group (and write on the newsprint) one or two beliefs (including practices, customs, or remedies that:

- are shared by at least two group members
- are held by one person, but not by anyone else in the group
- were held at one time, but are no longer
- have generated active interest among group members
- is now being doubted, since the group discussion.

3. (20 minutes) The groups meet to generate ideas, and identify examples of beliefs.

4. (20 minutes) A reporter from each group reviews the list with the larger group. Some questions to stimulate discussion are:

Which beliefs could be construed as appropriate health technologies? Why?

Where did some of the beliefs originate? (In speculating on origins, the Trainees should be encouraged to think of reasons why the beliefs persisted over the years.)

What kinds of illnesses do most of the beliefs attempt to treat? (Note: Often, these will be self-limiting illnesses and injuries, i.e., those that will subside whether treatment is given or not.)

Which beliefs might be shared in other cultures?

Which beliefs seem harmful? harmless? effective?

5. (15 minutes) Based on the previous exercise and discussion, the Trainer presents various changing perceptions of well-being:

Early perceptions considered the body, mind, and spirit to be healthy when in balance; inbalance represented illness.

Scientific perceptions focused on disease and tended to identify specific germs as universal elements causing illness.

In 1946, WHO defined health as: "a state of complete physical, mental and social well-being, not merely the absence of disease or infirmity."

Recent ecological perceptions see disease merely as a phase or episode in which the body's ability to cope is diminished; health is a continuing property and ability of an individual to rally from environmental insults, whether chemical, physical infectious, psychological, or social.

Questions, comments, and observations should be encouraged concerning individual perceptions of illness and well-being. As an introduction to the next activity, the Trainer asks: "How do you know when you are getting sick? What symptoms do you recognize?"

6. (10 minutes) The Trainer notes (on newsprint) some comments concerning individual perceptions of illness. Some characteristics may include: tired, depressed, lifeless, loss of appetite, short temper, aches and pains, anxious. When a number of symptoms have been generated, the Trainer comments that emotion and illness are intimately tied; that when one's emotional or mental health is out of balance, the body's physical condition also suffers.

7. (10 minutes) The Trainer asks for examples of physical feelings and characteristics when people are in unfamiliar or uncomfortable situations, and notes these on another piece of newsprint. These may include: depression, aches and pains, loss of appetite, desire to sleep, various anxiety reactions. The two lists are compared, and the Trainees are asked for any observations.

8. (20 minutes) The term "culture shock" is presented, and the Trainer asks for some definitions, and if applicable, individual experiences. The stages of culture shock are reviewed: honeymoon, hostility, superiority, adaptation (see Oberg), and the Trainer asks for suggestions of behaviors that might help diminish culture shock.

If time remains, the Trainees may read another of the articles on culture shock and any other assigned readings.

SESSION 18
Mud Block Construction

Time: 4 hours 15 minutes to 6 hours 15 minutes

Interim Objective: Given the necessary tools and materials, the Trainee will actively participate in the construction of both individual and gang molds for making mud blocks. The mold, built to required block size specifications, must be rigid, easy to handle, and designed to prevent mud from sticking to the walls when the molds are removed from the blocks.

Interim Objective: Given appropriate soil mixtures and a wooden mold, the Trainee will mix soil and water to correct proportions, and through kneading and puddling, will mold the mixture into mud blocks that are of the required size and show little or no sign of "slumping".

Overview: The Trainees begin to develop expertise in the construction of mud blocks and molds. First, the criteria for suitable materials and construction techniques are presented, then the Trainees determine appropriate soil composition, build the molds, and f bricate mud blocks for later use in building Lorena stoves.

Suggested Resources

Adobe Today Newsletter, Adobe News, Inc., New Mexico.

Boudreau, Eugene, *Making the Adobe Brick*, Fifth Street Press, Berkeley, 1971.

Evans, Ianto, *Lorena Owner Built Stoves*.

Long, J.D., *Adobe Construction*, College of Agriculture, University of California, Berkeley, 1946.

Neubauer, L.W., *Adobe Construction Methods*, California Agriculture Experiment Station Extension Service, Manual 19, 1964.

U.S. Department of Agriculture, Bureau of Soils, 1) *Soil Texture Classification*, 2) *Soil Classes*, 3) *Soils Suitable for Mud Blocks*, USDA, Beltsville, MD.

Materials Needed: For the shake, shine and worm test: glass jar or bottle, water/soil samples. For mold construction: wood, nails, saw, hammer, tape measure. For mud block construction: hoe, shovel, machete, appropriate soil mixture.

Procedure

The overall technical objective (page 16) is stated and explained, and an agenda for the day's activities is presented. The following brief talk may be presented as an introduction to the session:

Previous Page Blank

The utilization of mud blocks is often an appropriate substitute when access to manufactured construction material is limited and costs are high. Mud blocks have many advantages: they are low-cost, durable, and strong enough to be used as structural materials in a wide range of applications. Adobe buildings are fire-resistant, sanitary, dry, and, due to the thermal properties of adobe, they help equalize both hot and cold temperature extremes; consequently they are well-suited for use with passive solar heating designs. In addition, earthen construction is often an indigenous technology with which people may already be familiar.

Mud block or adobe bricks are rectangular, shaped in molds, dried in the sun, and then used in construction with mud or cement mortar. The bricks are made by mixing clay soil (28-48% clay) and water, and then pouring the mixture into wood frame molds generally with a size of 4" x 12" x 18" (having a volume of ½ cubic foot and weighing 50 lbs.). Blocks initially are left to dry three days, then turned on edge and left up to two weeks to cure.

At the end of the talk, the Trainer may ask for questions; however, it is advisable to limit discussion since many of the Trainees' questions will be answered during the practical skills/construction time.

2. (45 minutes) The Trainer discusses different soil types, important variables in determing soil composition, and the application of such information to mud block construction, utilizing samples of soil to illustrate key points.

The Trainees perform the shake, shine, and worm tests (see *Lorena Owner Built Stoves*, pp. 20-21) to determine the amount of sand and clay in the soil, and to gain familiarity with different soil types. They discuss findings and observations; the Trainer asks for responses to the question, "How can this knowledge about soil composition be applied in the making of mud blocks?" If there are questions about soils, or the test, they may be discussed.

3. (2 hours) Individual and gang mold construction workshop occurs.

Note: This activity may occur at this time, or, as in the Farallones training program, during an earlier session in the introductory phase of training, where the mold construction serves as an exercise in group dynamics and decision-making.

4. (1 hour) The Trainees form small construction groups. To accomplish the mixing process, the following tasks are assigned within each group:

Dig pit and loosen soil.

If necessary, wet down and allow to stand 2½ hours to soften dry clods.

Mix soil, water, and any admixture (chopped straw, if necessary) to a stiff mud consistency through puddling. During this step, the Trainer discusses various admixtures and their use.

5. (2 hours) The Trainer guides the block fabrication activities. The Trainees rotate through each task, and each build at least five blocks correctly. The tasks are:

- Ram mud into all corner of the form, and level the top.
- Withdraw the form.
- Wash the inside surfaces of the mold after each use.
- Repeat the process.

The blocks are evaluated according to the following assessment checklist:

Are the mud blocks of correct proportions?

Are the blocks of required size and shape?

Do the blocks show minimal or no signs of slumping?

Each Trainee is responsible for drying and stacking five blocks. Bricks should be left to dry (in the shade, if necessary) for 2-3 days, and should be turned on edge near the end of drying so that they dry evenly on both sides. Ideally, complete curing takes approximately two weeks.

SESSION 19
The Role of the Appropriate Technology Extensionist in Development: A Focus on Mud Technology

Time: 3 hours

Objective: The Trainee will examine the social and cultural considerations underlying the introduction and/or use of mud technology, and will identify various implications of mud construction in a rural setting.

Overview: In order to place mud technology skills in an appropriate context for future extensionists, it is necessary to examine indigenous uses for mud throughout the world. The Trainees analyze the cultural and social factors that influence the acceptance or rejection of mud block technology, and consider questions to determine the appropriateness of mud construction during Peace Corps service.

Suggested Resources:

Long, J.D., *Adobe Construction*, College of Agriculture, University of California, Berkeley, 1946.

Neubauer, L.W., *Adobe Construction Methods*, California Agriculture Experiment Station Extension Service, Manual 19, 1964.

Film, or slide show, or photographs illustrating different mud construction projects, including solar adobe construction.

Materials Needed: Slide or film projector, screen or blank wall, newsprint, markers, tape.

Procedure

1. (30 minutes) The group assembles for a discussion and slide show (photographs or film may be substituted) about the versatility of mud as a building material. Slides are shown of different mud-construction projects, including poured/rammed earth, cob, and sun-dried adobe blocks, as well as solar applications. The Trainer discusses the wide use of mud as an indigenous technology in many parts of the world, and the use of mud for homes, ovens, and other structures. Questions are invited and discussion encouraged.

2. (15 minutes) The Trainees form groups of 4-5 (according to region or country of Peace Corps service), and discuss factors that would potentially impede and contribute to the adoption of mud technology in a community in the United States. They compile, on newsprint, a summary of their conclusions, and post the list.

3. (10 minutes) When the lists are posted, the Trainees circulate to view them, taking note of common factors that appear. Common factors should be marked or circled as they are found.

Previous Page Blank

Some factors impeding adoption might be:

- low status perceptions
- dampness
- too much rainfall in area
- mud not available
- loan difficult to obtain
- not normal construction; too exotic

Some factors contributing to adoption might be:

- low cost
- available materials
- cool in summer, warm in winter
- adaptable to different designs
- may be owner-built
- relatively low maintenance

4. (10 minutes) The Trainer reviews the lists, and asks for any comments or observations.

5. (10 minutes) The groups re-form, and again generate lists of factors; however, the compilation should be made concerning the potential use or adoption of the technology in another culture, e.g., a country in which Peace Corps Volunteers serve. Instead of posting the lists, the groups join for a general discussion.

6. (15 minutes) A reporter from each group summarizes the conclusions. The Trainer asks for any broad conclusions concerning factors contributing to and impeding change in any culture. If the Trainees have none, the Trainer should provide some correlations. For example:

> People in the U.S. and in other countries share similar views of change: unless proved to be advantageous, they will resist it.
>
> Often, climatic, economic, and cultural considerations are foremost in people's minds when they decide to accept or reject a new technology.

7. (30 minutes) The Trainees, in groups, discuss the following questions in regard to their future Peace Corps service. They should consider the questions within the context of whatever information they have, however sketchy, about their job description or country.

> The introduction of adobe construction techniques should be approached with care since building practices are usually centered around long-standing tradition. What are those traditions? Is earthen construction already being used? In what applications? What materials are now used?

Adobe construction is labor intensive. How do community members relate to labor? To the use of time? To work priorities?

Are there cultural taboos against living "close to or within the earth" in construction and in using mud houses?

What effect will the use of agricultural soil for mud block construction have on the availability of arable land?

What are the climatic conditions in the area? In arid zones mud block construction may be practical; in wet climates, it would require some protective shield against rain.

SESSION 20
Integration of Training Themes

Time: 1 hour

Objective: The Trainee will identify the themes that appeared in the introductory week of training, and will the describe the relationships that exist among the various components of the training program.

Overview: The introductory week of training provides a context and a conceptual framework for the integration of the themes that will continue throughout the program. Both cognitive and physical skills are developed, as well as the attitudes that are necessary for appropriate extension endeavors. By perceiving the relationships that exist among the various components of the appropriate technology/renewable energy training program, the Trainees develop an understanding of the inter-related issues that comprise the development process, and of their own roles as appropriate technology extensionists.

Suggested Resources:

Introduction and Trainer's materials for *Sessions 1-19.*

Materials Needed: Pens and paper, chalkboard and chalk, newsprint and markers.

Procedure

1. (15 minutes) The Trainer presents introductory remarks, based on the overview, then asks for suggestions of themes that appeared in the first week of training. The responses should be written on the chalkboard or on newsprint. Some responses may be: technology, health, community assessment, communication skills, values clarification, energy issues, environment, problem-solving, roles of women.

2. (35 minutes) For this activity, the Trainees work together in pairs; a sheet of newsprint and two markers are given to each two people. They are instructed to present graphically (using a flow chart, short sentences, etc.) the relationships that they perceive between--and among--the various themes. The basic themes (chosen from the posted list, and including any additions) should be drawn, or written, in one color; the integration (indicated with arrows, lines, circles) marked in another. The Trainer should encourage the Trainees to be as detailed and specific as possible, and to see relationships wherever possible. It may be helpful to give an example before beginning the activity, e.g., mud technology -- related to, and integrated with: health, environment, energy needs, extension skills, women's roles in the community, etc. During the activity, the Trainer should circulate among the groups, and assist, if necessary. When each pair has completed the activity, the flow chart or illustration should be posted.

Previous Page Blank

3. (10 minutes) After viewing the charts, the entire group meets. The Trainer asks for some examples of integration, and for some observations concerning the training program. Some questions to stimulate discussion are:

Do you think that a program of this type should spend more time on technical matters than it appears to do so far?

Why do you think a health and nutrition component was included in this program?

What importance do communication and extension skills have in an appropriate technology/renewable energy training program?

Is the program, so far, what you expected it would be?

Why is it important to integrate cognitive and physical skills?

P H A S E I : ATTACHMENTS

I-1-A : Peace Corps Programming Criteria Sheet
I-3-B : Mud Block Molds
I-3-C : Effective Group Survey
I-6-D : Cultural Values Clarification Sheet
I-9-E : Global Energy Issues: Illustrative Charts
I-9-F : Global Energy Questionnaire
I-9-G : The Petroleum Palace Restaurant
I-12-H : Problem-solving Worksheet
I-14-I : Insolation Meter Data Collection Sheet

Task Analysis: Fabricate Mud Blocks
Task Analysis: Make and Use an Insolation Meter

PEACE CORPS PROGRAMMING CRITERIA

Note: Implicit in the criteria is the commitment to full and active participation, on all levels, by those people affected by Peace Corps projects and programs.

1. A program or project should directly contribute to increasing the capacity of people to meet the essential requirements for human survival, i.e., freedom from disease; adequate variety; quality and quantity of food; access to disease-free potable water; adequate shelter; and a physical and psychological environment that promotes well-being.

2. The intended immediate beneficiaries of programs or projects should be people from the poor majority most in need of assistance.

3. A program or project should be directed at helping people acquire skills, knowledge, practices and resources that will serve as lasting, locally appropriate solutions to basic concerns.

4. The needs that are addressed should be considered important by the people or community affected by the project or program, and local support should be considered vital and necessary to any development endeavor.

5. There should be a principal reliance on appropriate and local materials, human resources and technologies.

6. The activities of Peace Corps Volunteers should be focused on the local level where the needs exist.

7. The focus of activities should be on integrated development efforts, and be complementary to broader development goals, programs, and projects.

8. Programs and projects should be potentially replicable.

Previous Page Blank

MUD BLOCK MOLDS

There are both individual and gang molds, and are usually constructed from 2" x 4" (5 x 10 cm) or 1" x 4" (2.5 x 10 cm) lumber. Size of the blocks vary in accordance with end use. A mold 4"x12"x18" would produce a block weighing approximately 50 lbs. and having a volume of ½ cubic foot.

INDIVIDUAL MOLD:

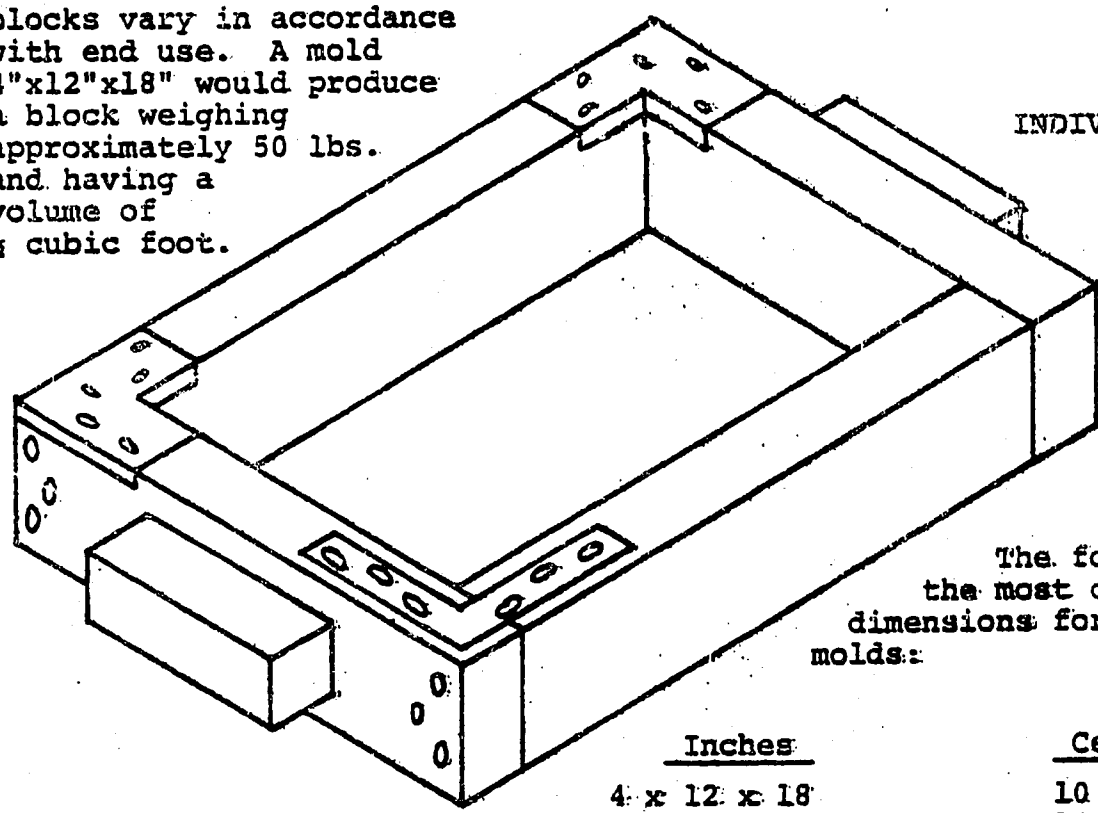

The following are the most commonly used dimensions for mud block molds:

Inches	Centimeters
4 x 12 x 18	10 x 30½ x 46
4 x 7½ x 16	10 x 19 x 40½
4 x 10 x 15	10 x 25½ x 38

GANG MOLD:

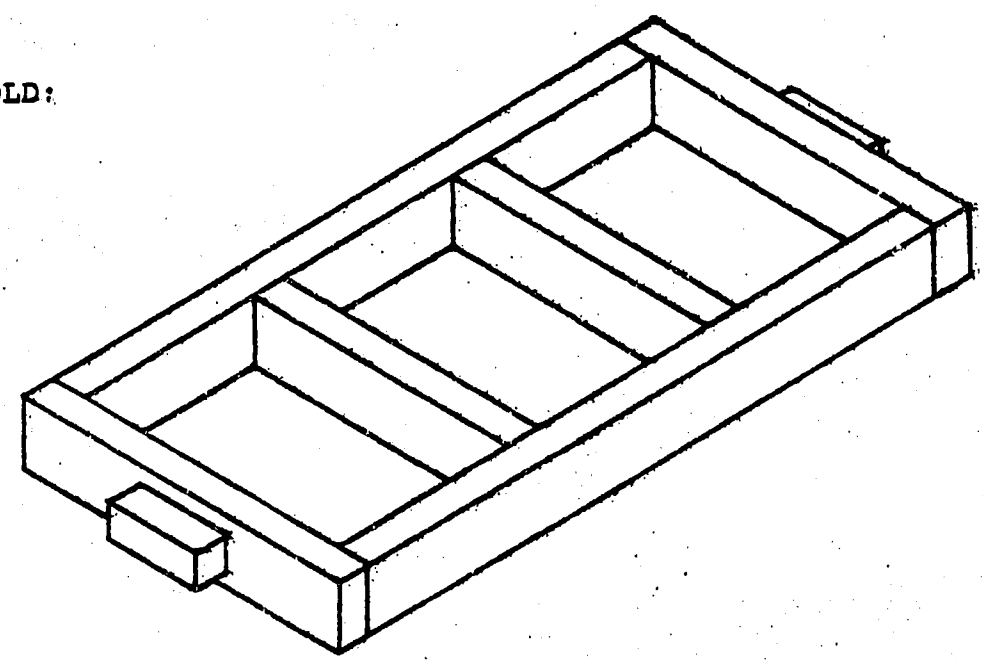

Reprinted from Systematic and Objective Analysis of Instruction Training Manual. Portland, OR: Northwest Regional Educational Laboratory, 1970.

EFFECTIVE GROUP SURVEY*

Group leaders, group facilitators, and group members may sometimes want to assess the group's capability for working productively. This survey can be used by one or many, with the results posted and discussed toward the end of a meeting.

Directions: Circle the letter opposite each item on the survey below that best describes, for you, the group's interactions.

The scale used is:

A = All group members
B = Most group members (two-thirds or more)
C = About half the group members
D = A few group members (one-third or fewer)
E = None of this group

During this (or the most recent) session, how many group members, including yourself:

	All	Most	Half	Few	None
1. Gave due consideration to all seriously intended contributions of other group members?	A	B	C	D	E
2. Checked (by paraphrasing, etc.) to make sure they knew what was really meant before agreeing or disagreeing?	A	B	C	D	E
3. Spoke only for themselves and let others speak for themselves?	A	B	C	D	E
4. Viewed all contributions as belonging to the group, to be used or not as the group decided?	A	B	C	D	E
5. Had the opportunity to participate in the group if they desired to do so?	A	B	C	D	E
6. Tried to find the reason if the group was having trouble getting work done?	A	B	C	D	E
7. Helped the group make decisions openly rather than by default?	A	B	C	D	E
8. Helped bring conflict into the open so the group could deal with it?	A	B	C	D	E
9. Looked upon behavior which hindered group process as a group problem, rather than as a "problem member?"	A	B	C	D	E

CULTURAL VALUES CLARIFICATION SHEET

Read each of the following statements. If you totally agree with this statement, put the number 1 in the corresponding space under column A. If you partially agree, put the number 2; neither agree nor disagree, a 3; tend to disagree, 4; totally disagree, 5. Make your decision quickly, without too much contemplation.

Now, go back over the statement and consider how the "average" American citizen would respond. In column B put the numbers according to the degree of the average American's agreement or disagreement.

THERE ARE NO RIGHT OR WRONG ANSWERS.

You have 15 minutes to complete this exercise.

	A	B
1. A primary objective of science and technology should be to control the natural environment in a non-destructive manner.	____	____
2. A person is considered well-educated and technically competent if able to recall precise facts and figures about a specific field of expertise.	____	____
3. Despite the current state of the economy, people who are willing to work hard can still get ahead in the U.S.	____	____
4. As the wealthiest country on earth, the U.S. has the moral responsibility to assist the developing countries with their technological and economic development.	____	____
5. Women and minorities have as much ability and right to develop, utilize, and control technology as anyone.	____	____
6. Scientific discovery is occurring at such a rapid rate that the solutions to humanity's most pressing problems are inevitable.	____	____
7. Higher education may be expensive, but most people with average intelligence and ambition can attend and succeed in college.	____	____
8. The U.S. government should not tolerate acts of terrorism or political tyranny.	____	____
9. Ultimately, the scientists and engineers are the ones who are most capable of making a realistic decision on the future development and safety of nuclear power.	____	____
10. Status, privilege, and authority are inherited rather than achieved in the U.S.	____	____

Previous Page Blank

	A	B
11. All people in our society have a right to enjoy the fruits of modern technology.	____	____
12. Solar energy utilization will soon become a commercially feasible source for a significant portion of our country's energy needs.	____	____
13. The U.S. should aid war refugees and victims of natural disasters.	____	____

World Energy Consumption by Region, 1960-90

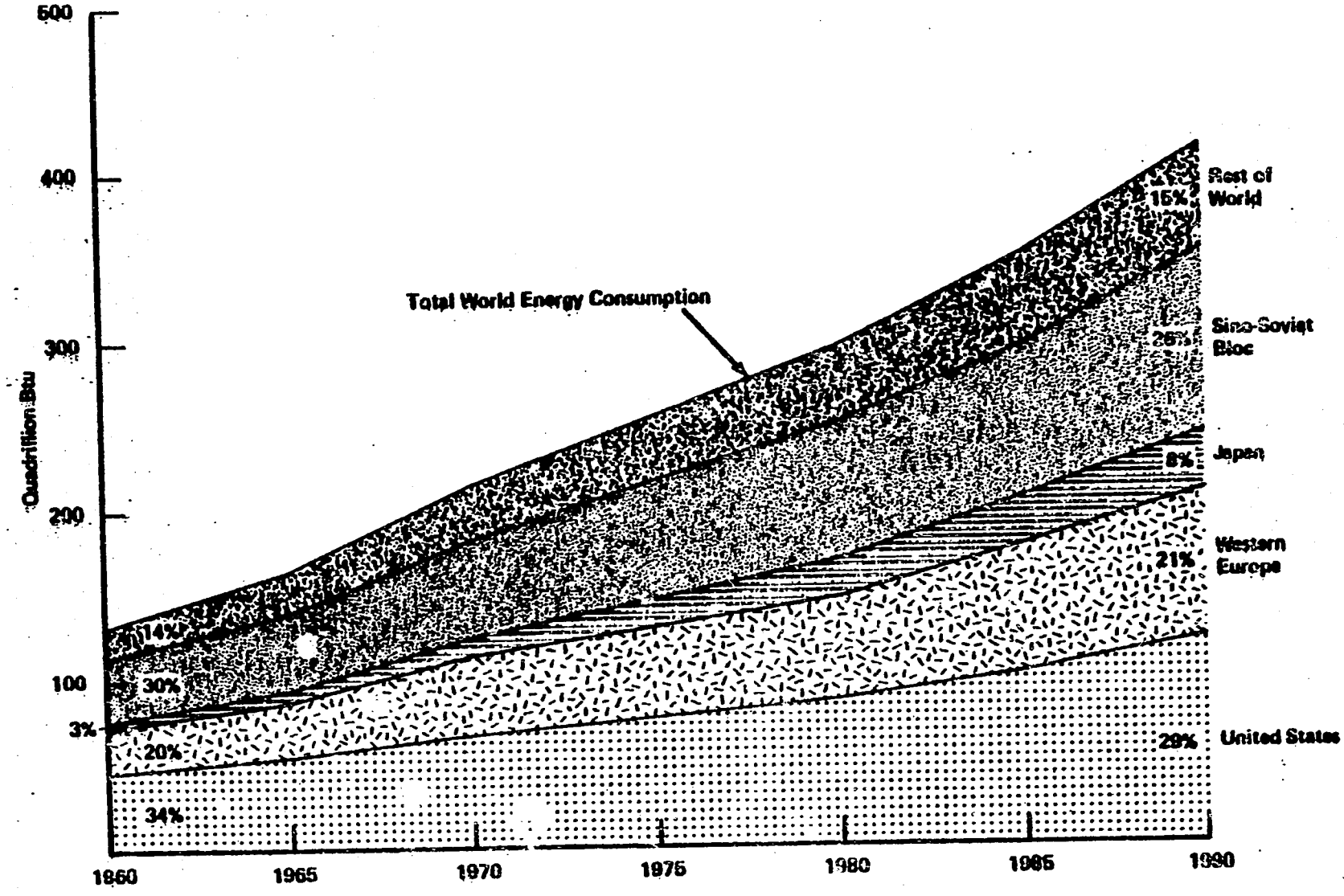

Source: Historical data: United Nations, 1974;
Projections: U.S. Department of the Interior.

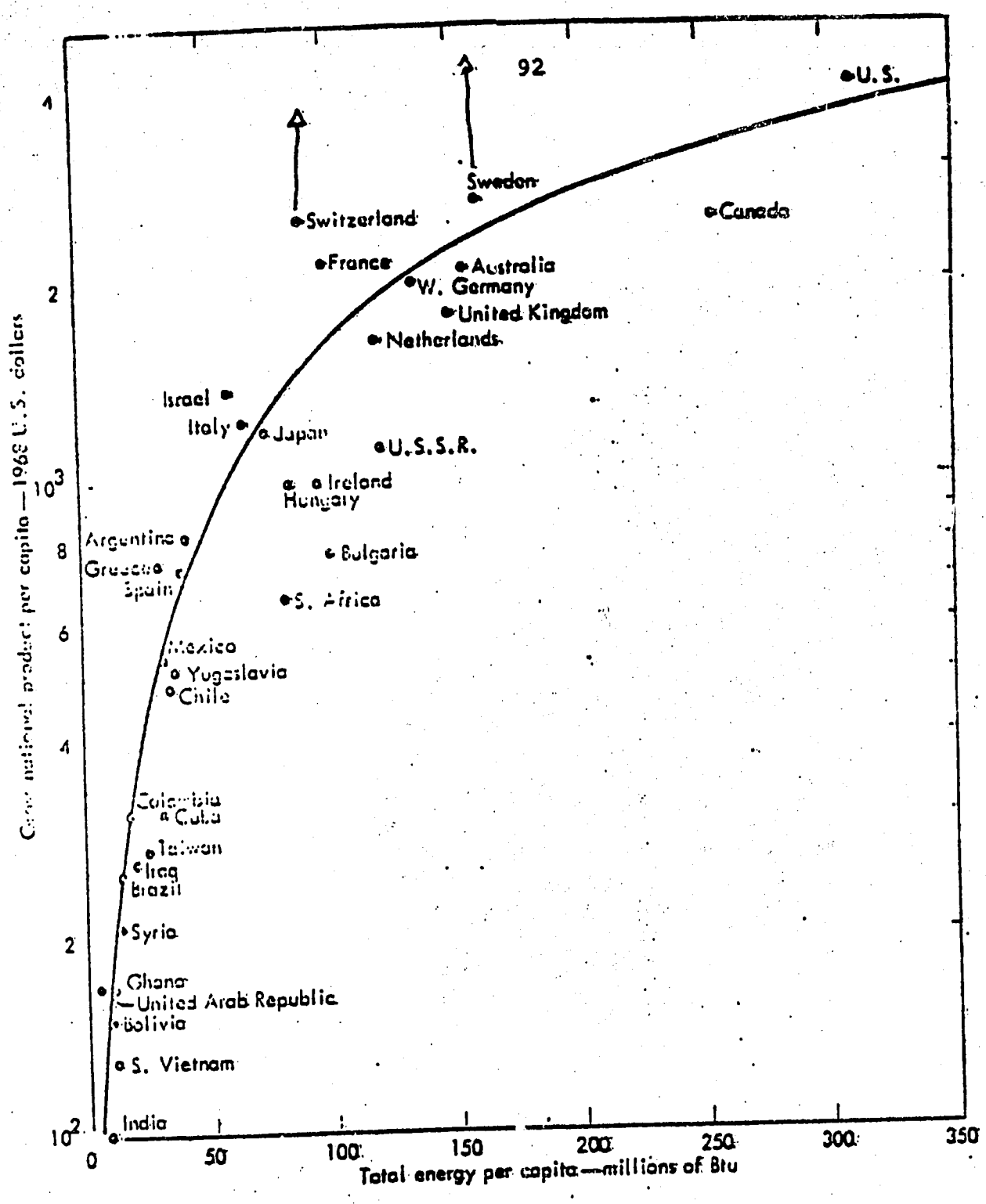

FIGURE 1-4 Energy per capita versus the gross national product per capita in 1968 for several nations.

ANNUAL PER-CAPITA WORLD ENERGY CONSUMPTION

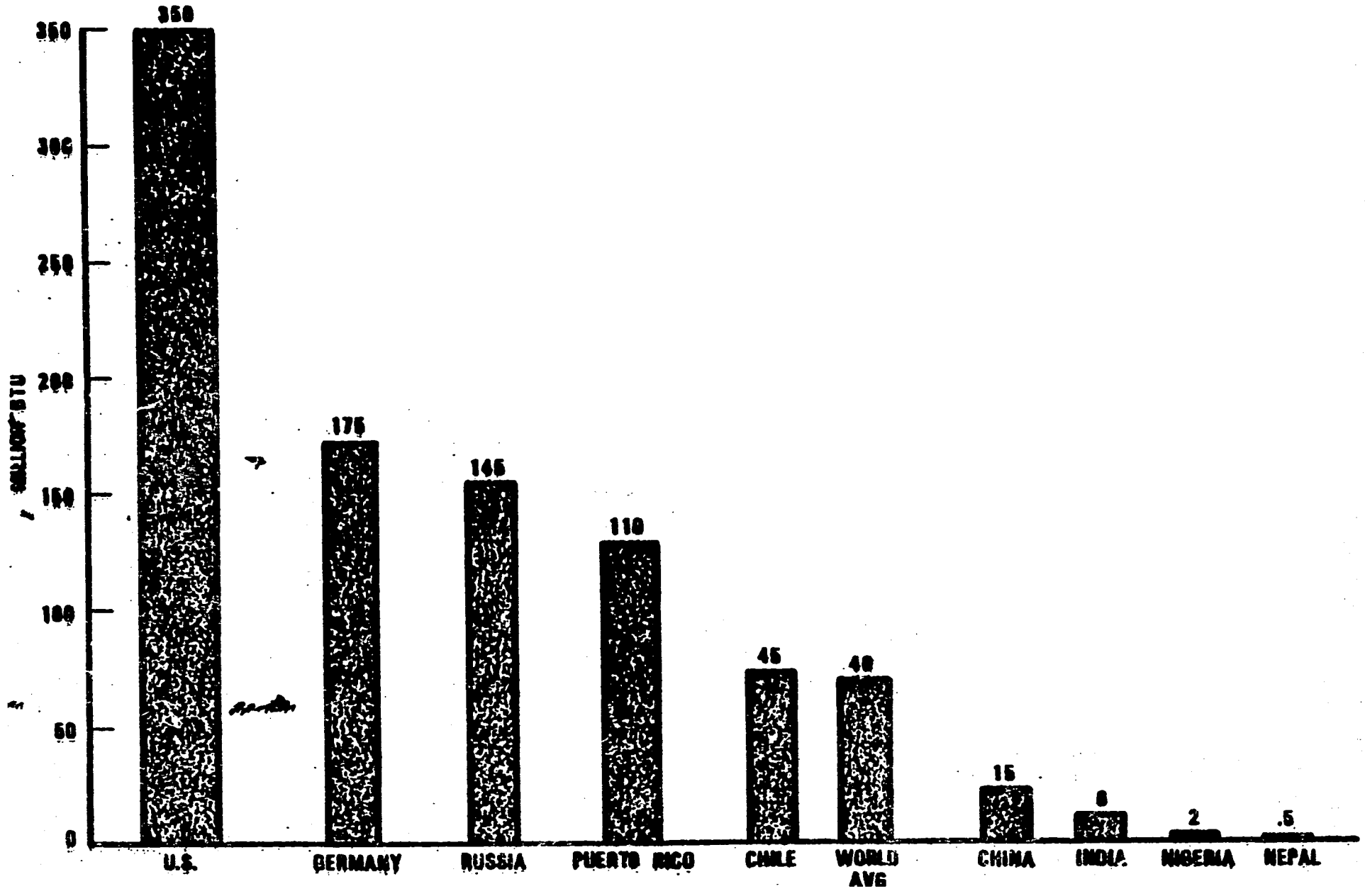

Attachment I-9-E

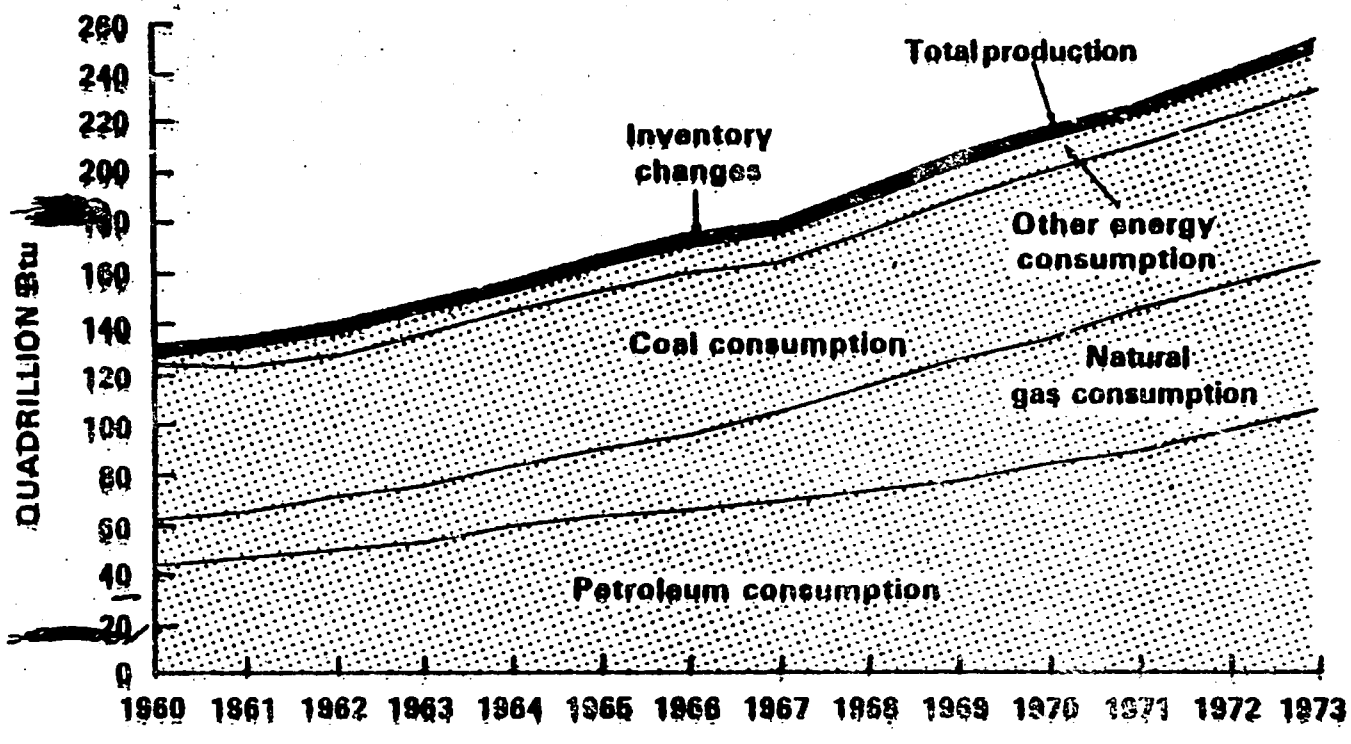

World Energy Consumption, Production, and Inventory Changes

World Natural Gas Production, 1973

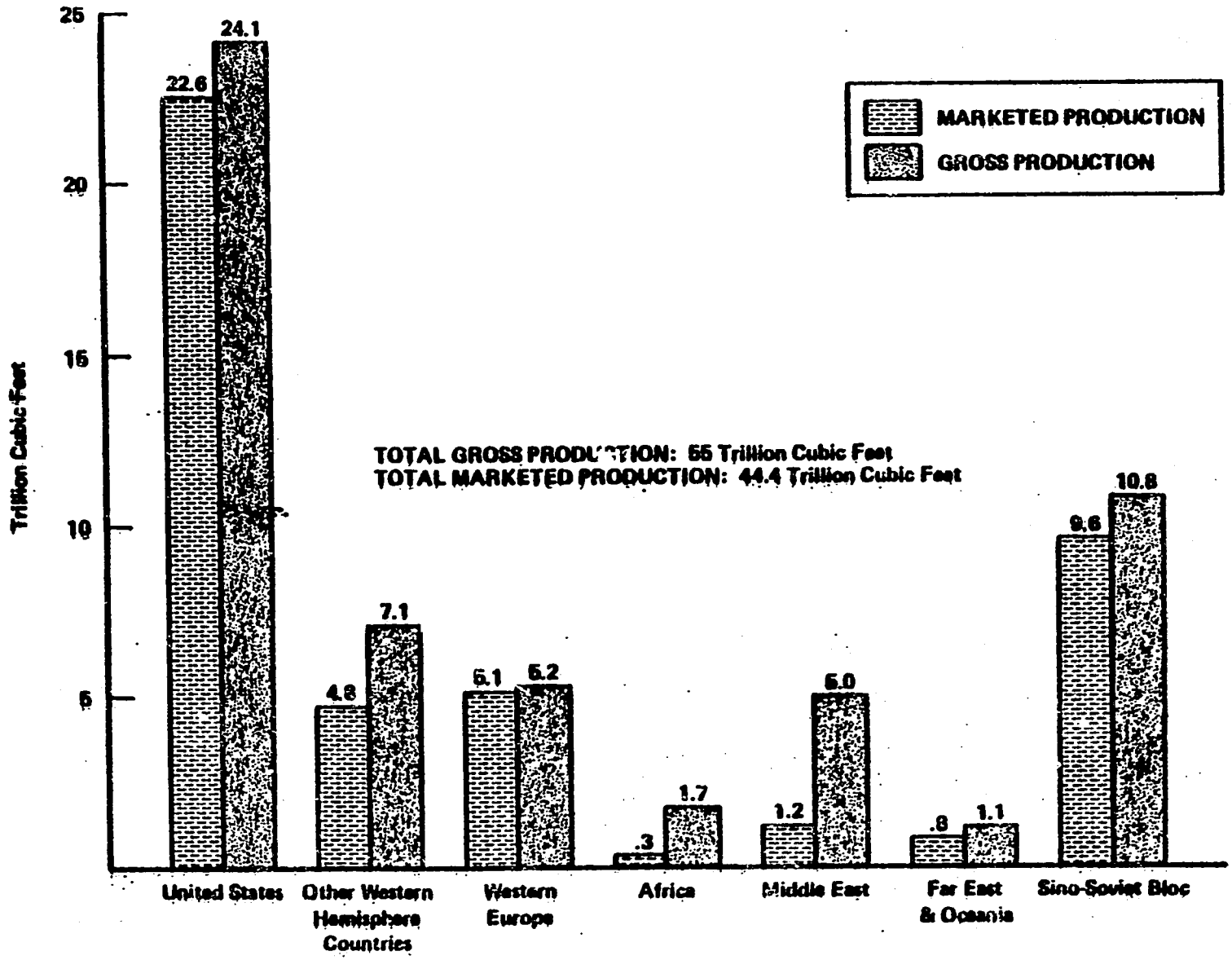

Source: U.S. Bureau of Mines, 1974.

World Natural Gas Reserves, 1973

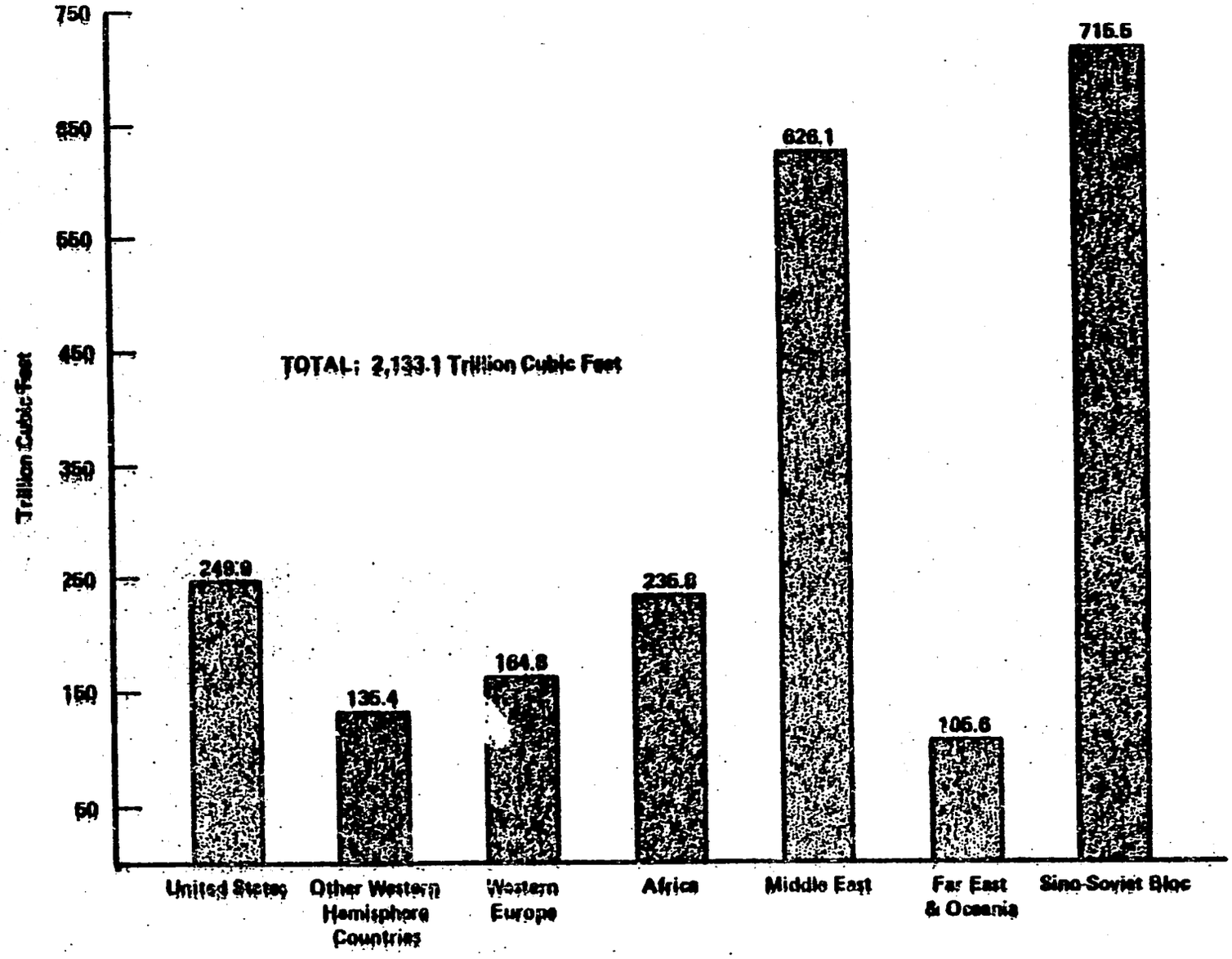

Source: U.S. Geological Survey, 1974; World Oil, August 15, 1974, pages 64-191.

World Petroleum Production and Consumption, 1973

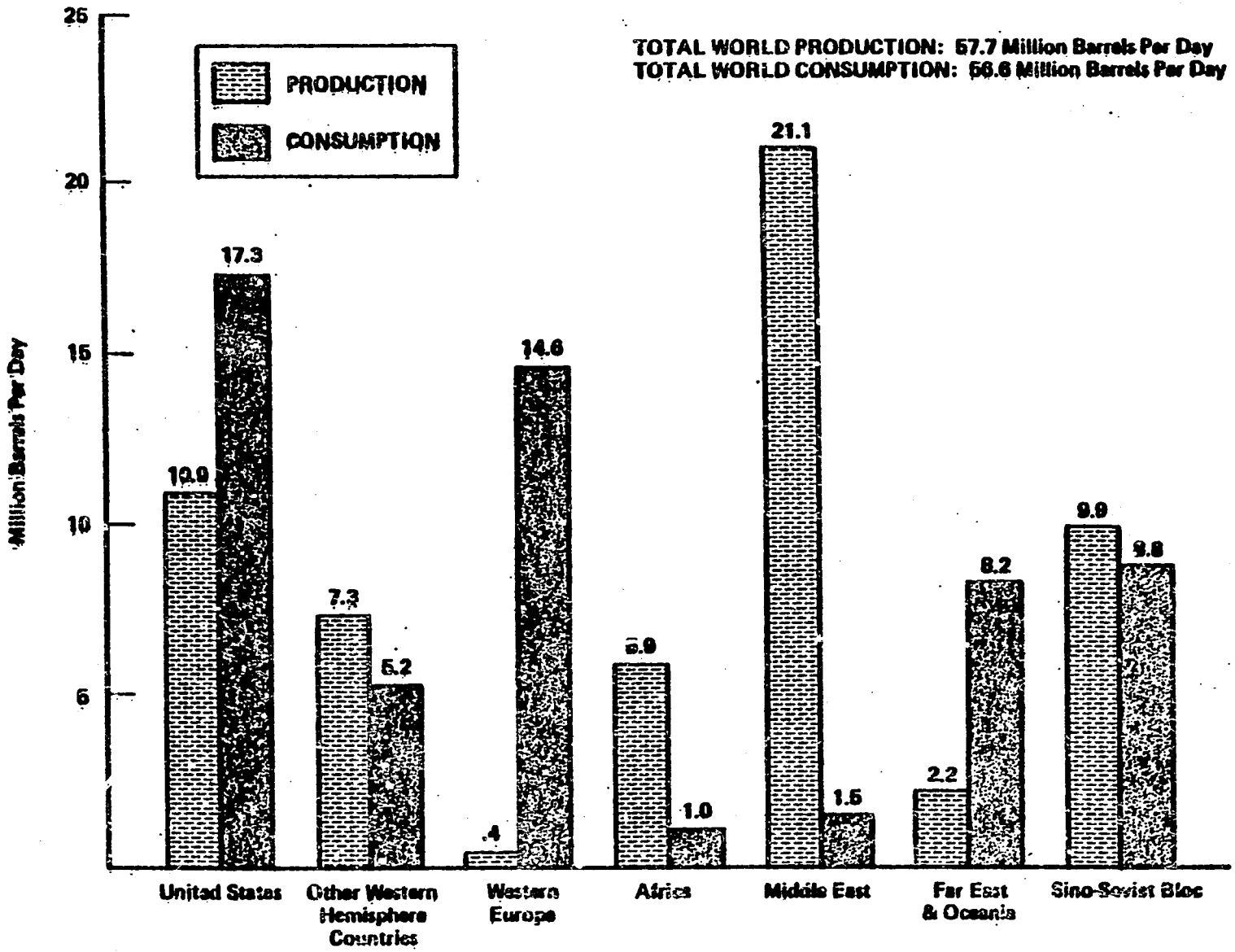

Source: Twentieth Century Petroleum Statistics, DeGolyer and McNaughton, 1974.

Growth of World Population to the Year 2000

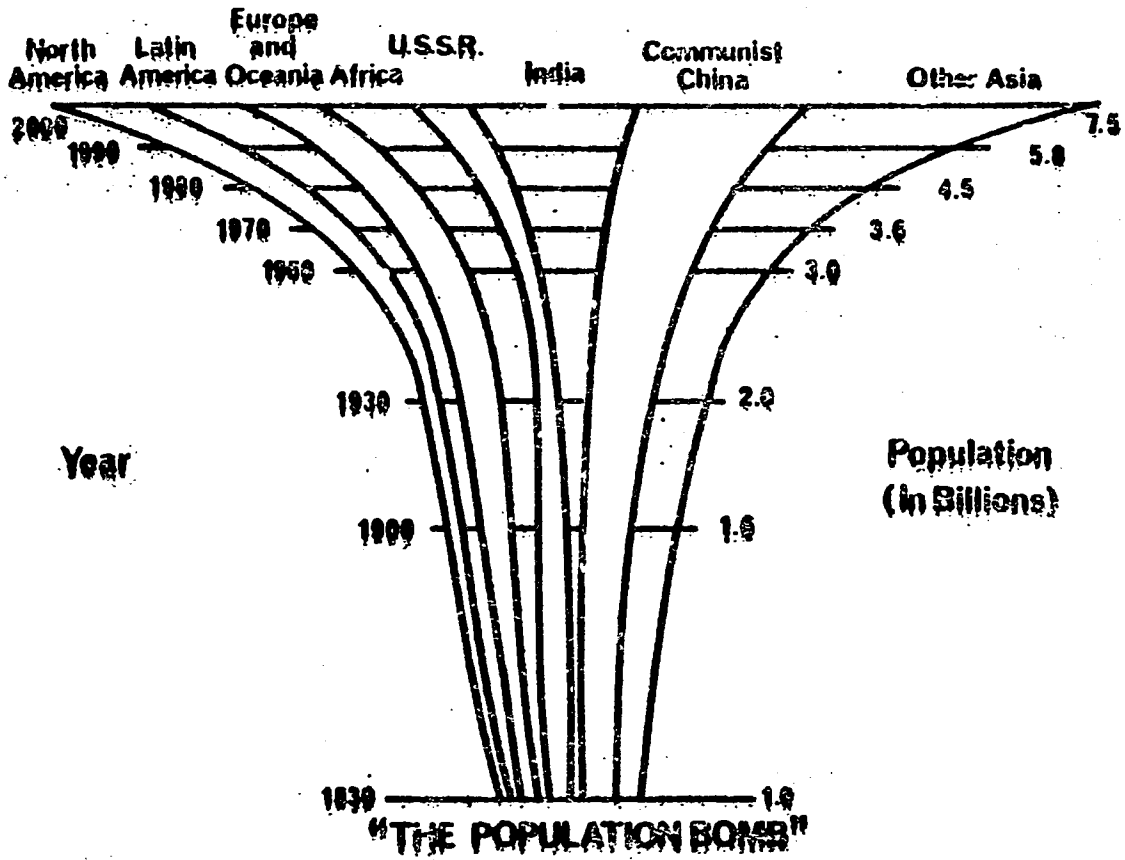

"THE POPULATION BOMB"

Source: Department of State

Adapted From: Food: Where Nutrition, Politics and Culture Meet, D. Katz, et.al.

Attachment I-9-E

GLOBAL ENERGY QUESTIONNAIRE

The purpose of this exercise is to determine your understanding and feelings on global issues. You are not expected to know the answers to every question. In Part Two, there are no right or wrong answers; the statements should reflect your opinion.

PART I : Factual Knowledge

1. ____ percent of the world's population lives in developing countries:
   a. Less than 10% c. about 50% e. about 90%
   b. about 25% d. about 75%

2. How much of the world's population lives in the United States?
   a. 3% b. 6% c. 9% d. 12% e. 15%

3. The United States has ____% of the world's resources.
   a. about 15% c. about 30% e. about 65%
   b. about 25% d. about 50%

4. Which three continents contain the majority of developing countries?
   a. Asia c. Africa e. Australia
   b. North America d. Latin America f. Europe

5. Which four of the following countries have the highest <u>rate</u> of population growth?
   a. India d. Japan g. Puerto Rico
   b. Australia e. Nigeria h. China (Mainland)
   c. Saudi Arabia f. U.S. i. Portugal

6. Which four of the above countries have the lowest <u>rate</u> of population growth?

7. Which item do you think receives the biggest "chunk" of the U.S. budget?
   a. foreign aid c. welfare programs e. government operations
   b. military d. education programs f. health programs

8. What percent of the U.S. GNP do you think goes to foreign assistance?
   a. about 25% c. about 15% e. about 1.0%
   b. about 5% d. under 1%

9. Do you think that U.S. aid to developing countries as a <u>percent of</u> GNP is:
   a. more than that of any other developed country
   b. more than most developed countries
   c. about the same as other developed countries
   d. less than many other developed countries

10. In 1958, a Central African earned enough money, from selling us 200 pounds of cotton, to buy four blankets. How many blankets could he buy today for the money earned from selling the same amount of cotton?

a. 1 b. 4 c. 8 d. 12

11. The average protein intake of each person in the U.S. is about 96 grams per day; in India it is:

a. about the same b. ½ as much c. 3/4 as much d. 1/3 as much

12. The population of the world is approximately 4 billion (4,000 million). How many people suffer from insufficient protein/energy supply?

a. 50 million
b. 100 million
c. 200 million
d. 460 million
e. 900 million

13. The world's largest importer of beef is:

a. Taiwan b. France c. U.S.S.R. d. Kenya e. U.S.A.

14. The average person in the U.S. or Canada consumes____ times as much grain as an Indian, Columbian or Nigerian.

a. 1 b. 2 c. 3 d. 5 e. 10

15. Approximately how many pounds of grain does a steer require to add on an additional pound of meat?

a. 1 b. 5 c. 16 d. 25 e. 30

16. Which three of these countries do you think have been designated most in need of food aid by the U.N. in 1974?

a. Bangladesh
b. Spain
b. Honduras
c. Cambodia
e. Egypt
f. Mexico
g. Kenya
h. Chile

17. Which three of the above countries do you think were given the largest amount of U.S. food aid in 1975?

18. The same amount of food eaten by 210 million Americans could adequately feed _____Chinese on an average Chinese diet.

a. 300 million
b. 500 million
c. 1 billion
d. 1.5 billion
e. 2 billion

19. The U.S. comprises 6% of the world population, and consumes approximately ____% of the world's resources.

a. 10% b. 75% c. 30% d. 50%

20. The U.S. ranks third among the world's leading food importers, and ____ of our food imports are from developing countries.

a. 1/5 b. 1/2 c. 2/3 d. none

21. As recently as 1850, wood met ____% of U.S. fuel needs.
a. 25 b. 50 c. 90 d. 10

22. Renewable energy sources comprise ____% of the total energy used in the U.S.
a. 1 b. 4 c. 10 d. 25

23. In the last 25 years, ____% of the world's trees have been cut for human uses.
a. 10 b. 50 c. 5 d. 80

24. By the year 2001, energy use in the U.S. is expected to _____, (a. triple b. double c. stay the same) and world wide demands are expected to _____.
a. triple b. double c. stay the same

25. U.S. agriculture uses five times the amount of fertilizer as it did in 1947 to produce ____(the) amount of crop.
a. three times b. twice c. the same d. half

26. The Amazon forest may disappear in ____ years if it continues to be destroyed at the present rate.
a. 100 b. 5 c. 35 d. 10

27. The Sahara Desert is expanding south at rates of up to ____ miles per year.
a. 5 b. 30 c. 10 d. 50

28. In many countries, 1 calorie of energy is invested to obtain 5-50 food calories; in the U.S., 5-10 calories are invested to produce ____ calorie(s) of food.
a. 1 b. 5 c. 10 d. 2

29. Of 3000 known food cultivars, ____ species feed the world today.
a. 100 b. 1000 c. 15 d. 50

30. If all pesticides were eliminated, crop loss due to pests would rise ____%.
a. 50 b. 25 c. 10 d. 7

Part II: Attitudes

1. The food and energy I consume is not really related to hunger and scarcity in the developing countries of the world.

2. People are poor because there just isn't enough to go around.

3. Most American have an accurate idea of how Africans live.

4. If the poor nations would adopt the U.S. economic and political systems of capitalism and democracy, they would develop more rapidly.

5. The U.S. government should give more aid to needy countries.

6. If poor nations would adopt a socialist economic and political system as in China, they would develop more rapidly.

7. People don't have enough because they are unwilling to work.

8. Write the first five words that come to your mind when you hear the word "hunger".

_____ _____ _____ _____ _____

9. The major problems in the world for the rest of this century will be: (choose three)

shortage of food	inflation	energy crisis
pollution	disease	war
weapons race	overpopulation	widening rich - poor gap
future shock	unemployment	urban slums
other		

10. Check the two statements closest to your thinking:
   a. The problem of world poverty is so enormous and complex that I don't see how my life or my efforts will really make much difference.
   b. The problem of world poverty is my problem, since the future of my life is tied to the lives of all other people on earth.
   c. The problem of world poverty can be solved, and my responsibility is to do everything possible to get people and governments to practice the solutions.
   d. The problem of world poverty is so urgent that I can't wait to know all I need to know before I take action to combat poverty.
   e. The problem of world poverty is mostly a problem of foreign countries, and it will have little effect on my life as a citizen of the U.S.
   f. The problem of world poverty is my problem, since the way that I live, and others around me live and eat, can help to cause or remedy poverty.

11. In an effort to overcome world hunger and poverty, what do you believe is a worthwhile and attainable goal by the year 2000?
   a. Equal distribution of wealth and resources among the world's people.
   b. Achieving minimum standards of nutrition and livelihood necessary to assure a tolerable existence for all the world's people.
   c. Continue to stave off massive starvation through emergency food aid programs, but don't expect to "solve" the problem of world hunger.
   d. Do as much as we reasonably can, but expect that many millions of people will die of starvation in the foreseeable future.
   e. Other:

ANSWERS TO PART I:

1. d--about 75%
2. b--6%
3. c--about 30%
4. Asia, Africa, Latin America
5. Saudi Arabia, India, Nigeria, Australia
6. Portugal, U.S., Puerto Rico, Japan
7. b--military
8. d--under 1%
9. d--less than many of developed countries
10. a--1
11. b--one half as much
12. d-460 million
13. e--U.S.
14. d--5
15. c--16
16. a--Bangladesh; c--Honduras; g--Kenya
17. d--Cambodia; e--Egypt; h--Chile
18. d--1.5 billion
19. c--30%
20. c--2/3
21. b--50%
22. b--4%
23. b--50%
24. b--double
    b--triple
25. c--same
26. c--35
27. b--30 (18 ft./day)
28. a--1
29. c--15
30. d--7

Attachment I-9-G

THE PETROLEUM PALACE RESTAURANT

(Adapted from Katz, *Food: Where Nutrition, Politics and Culture Meet*)

The "food industry" is a highly productive, but energy consumptive system that depends upon large quantities of usually non-renewable sources of energy to produce, process, transport, store, and prepare many foods. There is much concern about this dependence, and now efforts must be aimed at halting the indiscriminate and wasteful use of non-renewable energy sources. There is a new, and very unusual restaurant. It is called the Petroleum Palace, and the feature that distinguishes it is that the prices are based on the *amount of energy* used for each food. The owner is very concerned with ecology, and is serious about the need to conserve energy in this country. Therefore, higher prices are charged for foods requiring much energy to grow and process, and lower prices are charged for those using less energy. A discount is offered to each patron who explains why one food is "energy-cheaper" than another. The following menu is representative of the foods offered. Please select the items you would order, based on *energy conservation* -- not necessarily on taste preference or nutritional value. On the menu, write a few words explaining your choice; when you have completed your selection, the prices will be made available to you. If your explanations are correct, you will be given a 10¢ discount for each one.

MENU

APPETIZERS: Choose <u>one</u> from each <u>pair</u>.

* Fresh juice or frozen juice _____
* Cracker A (unwrapped, available to the store in bulk) or Cracker B (wrapped individually, packed in small cartons) _____
* Butter or margarine _____

MAIN DISH: Please make a first and second choice as we do not always carry each entree.

* Luncheon meat _____
* Chicken _____
* Turkey _____
* Rice and Vegetables _____
* Beef (grass-fed) _____
* Beef (grain-fed) _____

VEGETABLE: Sorry, today we have only carrots, but you may choose your preferred type.

* Fresh carrots _____
* Dehydrated carrots _____
* Frozen carrots _____
* Canned carrots _____

Previous Page Blank

DRINKS: Please choose a first and second choice as we sometimes run short of one kind of drink at lunch

* Soft drink (in aluminum can) _____
* Soft drink (in returnable glass bottle) _____
* Milk _____
* Beer (in aluminum can) _____
* Beer (in returnable glass bottle) _____
* Juice (in aluminum can) _____

DESSERT: Choose one

* Apple (homegrown in our restaurant's own garden, or store-bought _____ _____ _____
* Walnuts (shelled) OR (unshelled) _____ _____ _____
* Ice cream _____

Attachment I-9-G

PRICE LIST AND EXPLANATIONS FOR FOOD SOLD AT PETROLEUM PALACE

(prices are proportional to actual energy expenditures)

APPETIZERS:

* Canned Juice: 12¢ Frozen Juice: 46¢
  (Freezing and processing use a great deal of energy, both initially and for storage)
* Cracker A: 10¢ Cracker B: 15¢
  (Food excessively packaged or only available in small packages is more energy-intensive than unwrapped foods or foods available in bulk)
* Butter: 15¢ Margarine: 5¢

MAIN DISH

* Luncheon meat: $1.60
* Chicken : .96
* Turkey 1.06
* Rice & vegetables: $ .45
* Beef (grass-fed) : 1.48
* Beef (grain-fed) : 2.08

(Animals are inefficient converters of protein. A pound of meat requires about four times the energy to produce and market as a pound of vegetable protein. Some animals are more efficient converters of protein than others.)

VEGETABLE

* Fresh carrots 12¢
* Dehydrated carrots: 92¢
* Frozen carrots: 31¢
* Canned carrots: 23¢

(Processed vegetables require more energy than fresh vegetables; freezing and dehydration especially require large amounts of energy.)

DRINKS

* Soft drink (aluminum can): 45¢
* Soft drink (returnable bottle): 31¢
* Milk 34¢
* Beer (aluminum can) : 50¢
* Beer (returnable bottle) 25¢
* Juice (aluminum can) : 40¢

(Aluminum cans require a great deal of energy to mine and manufacture; non-returnable containers use much more energy than returnable containers which can be reused approximately 15 times)

DESSERT

* Homegrown apple : 3¢
* Store-bought apple: 19¢

(Homegrown apple by commercial methods saves commerce and transport; organic methods would save more)

* Walnuts, shelled: $1.04
* Walnuts (unshelled): 39¢
* Ice-cream: 60¢

(Large quantities of milk are used; freezing is necessary)

Attachment I-12-H

PROBLEM SOLVING WORKSHEET

O - Original Problem

F - Factors

Driving Forces	Restraining Forces

P - Problem restatement

I - Ideas

S - Solution

A - Acceptance

(From CHP International, Inc., Staff Training Materials. 707B Davis Rd., Elgin, IL 60120)

Previous Page Blank

Attachment I-14-I

INSOLATION METER DATA COLLECTION SHEET

Name:
Location:
Orientation (compass direction):
Tilt (degrees from horizontal):
Weight (kilograms):
Aperture (square meters):
Weight/Aperture:

Date	Weather Conditions	Time	Temp	$\frac{\Delta t}{hr}$	$\frac{Kgcal}{m^2 hr}$	$\frac{\Delta t}{day}$	$\frac{Kgcal}{m^2 day}$

$$\text{Hourly Insolation}\left(\frac{KgCal}{m^2/hr}\right) = \frac{\text{Weight (kg)} \times \Delta t/hr\ (^{o}C/hr)}{\text{Aperature of meter } (m^2)}$$

$$\text{Daily Insolation}\left(\frac{Kgcal}{m^2 day}\right) = \frac{\text{Weight (kg)} \times \Delta t/day\ (^{o}C/day)}{\text{Aperture of meter } (m^2)}$$

Note that weight and aperture are constants. The only variable is Δt Therefore, to find insolation, multiply weight/aperture by the Δt.

TASK ANALY

PROJECT : Fabricate Mud Blocks

TASKS	TASK ELEMENTS	PERFORMANCE CRITERIA	KNOWLEDGE AND COGNITIVE SKILLS	MATERIALS	TOOLS
1. Determine soil composition & select soil with 28-48% clay content	Shake test	Stratification of soil particles; ability to discover amount of sand in soil	Knowledge of different types of soil: sand, silt, & clay	Glass jar or bottle, water	
	Shine test	Ability to discover amount of clay in soil			
	Worm test	Same as above			
2. (OPTIONAL) Test soil from different areas for strength by using test blocks	Build a sifter	Sifter is rigid	Knowledge of basic carpentry skills	Screen, nails, wood	Hammer, measuring device
	Build mold using prescribed dimensions of 30" x 10" x 4"	Mold frame is rigid & easily lifted	Same as above	Wood, nails or wood screws	Hammer, saw, screwdriver
	Sift soil & mix with water			Soil	Shovel
	Fill & pack mold; then remove mold to leave blocks	Blocks are well formed and do not slump or stick to mold		Soil & water	

TASK ANALYSIS

PROJECT : Fabricate Mud Blocks

TASKS	TASK ELEMENTS	PERFORMANCE CRITERIA	KNOWLEDGE AND COGNITIVE SKILLS	MATERIALS	TOOLS
2. Test soil of different areas of strength using test blocks, continued	Dry blocks; test for strength & select strongest				
3. Construct block-making form (either individual or gang mold) for desired size of blocks - 15" x 10" x 4"	Determine size of blocks needed	Mold is desired size, rigid & easily handled	Ability to compute block size for end use needed & weight of block that person can work with	Wood, nails or wood screws	Saw, screw-driver, hammer
4. Set up mixing operation	Dig pit & loosen soil Wet down & allow to stand 2½ hours to soften dry clods (if necessary				Hoe or shovel
5. Mix soil, water, & any admixture to a stiff mud consistency through puddling		Mixture is correct proportions for block making	Understanding of relationship between soil types & water	Straw cut to length of 4" - 8"	Machete & hoe

TASK ANAL'

PROJECT : Fabricate Mud Blocks

TASKS	TASK ELEMENTS	PERFORMANCE CRITERIA	KNOWLEDGE AND COGNITIVE SKILLS	MATERIALS	TOOLS
6. Carry mixture to smooth level area				Building paper or wooden platform	Wheelbarrow baskets or cart or shovel
7. Mold mixture into blocks using constructed mold	Ram mud into all corners of the form Level off the top Withdraw form	Finished block is required size all around Block does not stick to form & block does not slump			
8. Wash inside surfaces of mold				Water	
9. Repeat molding process					
10. Leave bricks flat 2-3 days to dry & shade if necessary	Build shading apparatus if necessary		Understanding of drying temperatures		

TASK ANALYSIS

PROJECT : Fabricate Mud Blocks

TASKS	TASK ELEMENTS	PERFORMANCE CRITERIA	KNOWLEDGE AND COGNITIVE SKILLS	MATERIALS	TOOLS
11. Turn on edge second or third day to dry evenly on both sides					
12. After 3 days to a week, stack in loose piles to cure					
13. After another week, lay blocks for mud stove base or solar grain dryer walls	Measure stove base dimensions or dryer size		Knowledge of size of stove needed by person or family		
	Level ground in measured area	Stove base is level	Knowledge of levels & laying lines	String	Machete, rake or board
	Lay mud blocks using mud mortar	Blocks provide adequate support for stove mass or provide adequate walls for solar dryers			
		Overall Criterion Mud blocks, when used as a building material, show no serious signs of crumbing, cracking, or slumping			

TASK ANALYSIS

PROJECT : Make and Use an Insolation Meter

TASKS	TASK ELEMENTS	PERFORMANCE CRITERIA	KNOWLEDGE AND COGNITIVE SKILLS	MATERIALS	TOOLS
1. Build an insolation meter	Locate small container & attach thermometer holder to it	Must be watertight	Understanding of materials required	Can, short piece of pipe	Solder kit
	Paint tank & holder black	Good coverage		Paint	Brush
	Surround with rigid insulation on 5 sides, leaving a larger side exposed OR Surround tank with appropriate box filled with insulation	Airtight	Knowledge of different insulation materials	Insulation materials, fasteners	
	Measure & cut glazing material to fit 6th side	Cover full 6th face		Glazing	Glass cutters, shears
	Fill container with water; weigh, seal, & insert thermometer into holder			Water, thermometer	
	Seal glazing tightly	Airtight		Tape or other fasteners	

TASK ANALYSIS

PROJECT : Make and Use an Insolation Meter

TASKS	TASK ELEMENTS	PERFORMANCE CRITERIA	KNOWLEDGE AND COGNITIVE SKILLS	MATERIALS	TOOLS
2. Take insolation meter data	Place meter at potential solar site at desired tilt & orientation	Pick sunny spot	Know sun angles & shade map for area		
	Note water temperature at beginning of day	Read thermometer to within 1°C	Knowledge of conversion from English to metric system	Paper	Pencil
	Check temperature each hour of the day	Read thermometer to within 1°C	Know hourly insolation	Paper	Pencil
	OR		OR		
	Check temperature at end of the day	Same as above	Daily insolation is required	Paper	Pencil
	Take readings for desired number of days, tilts, & orientations				
3. Calculation of insolation	Make calculations to find insolation	Accurate calculations	Know units of solar gain (insolation)	Paper	Pencil
	Convert units if necessary		Know conversion factors from metric to English or English to metric	Paper	Pencil

TASK ANALYSIS

PROJECT : Make and Use an Insolation Meter

TASKS	TASK ELEMENTS	PERFORMANCE CRITERIA	KNOWLEDGE AND COGNITIVE SKILLS	MATERIALS	TOOLS
		Overall Criterion Meter is correctly made & positioned so that individual can determine amount of insolation at potential solar site with given orientation and tilt.			

INSOLATION METER

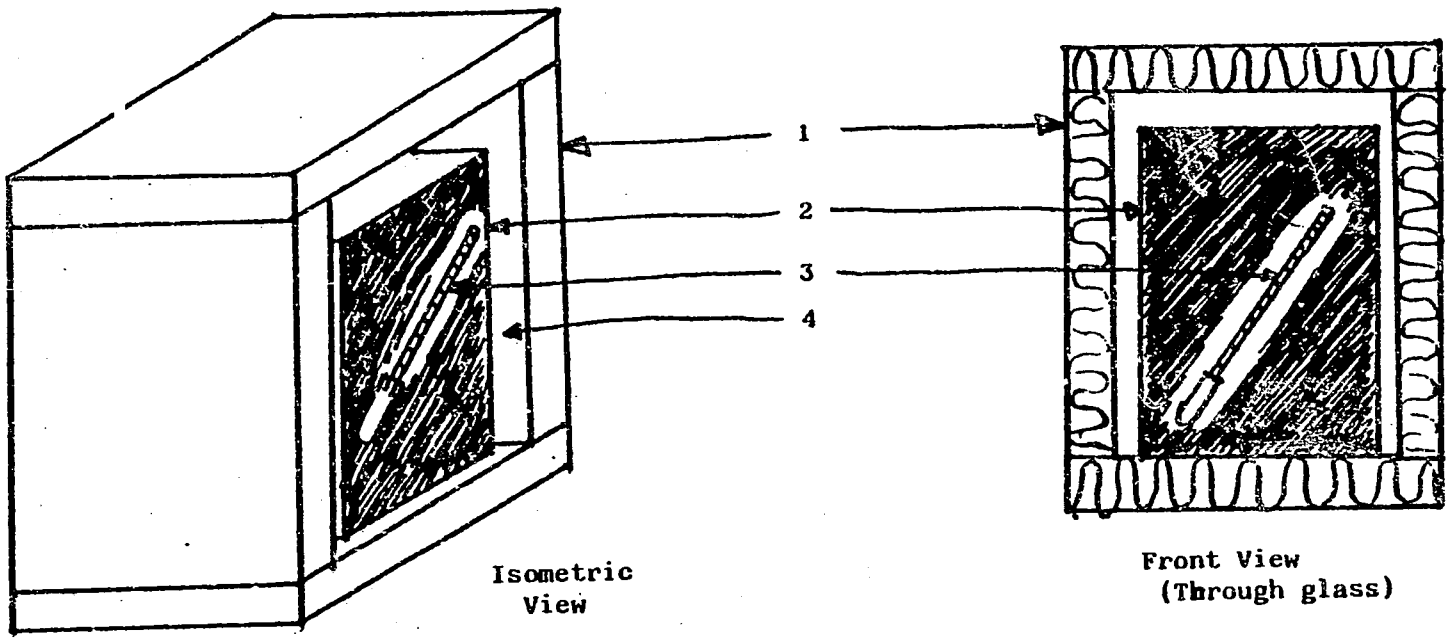

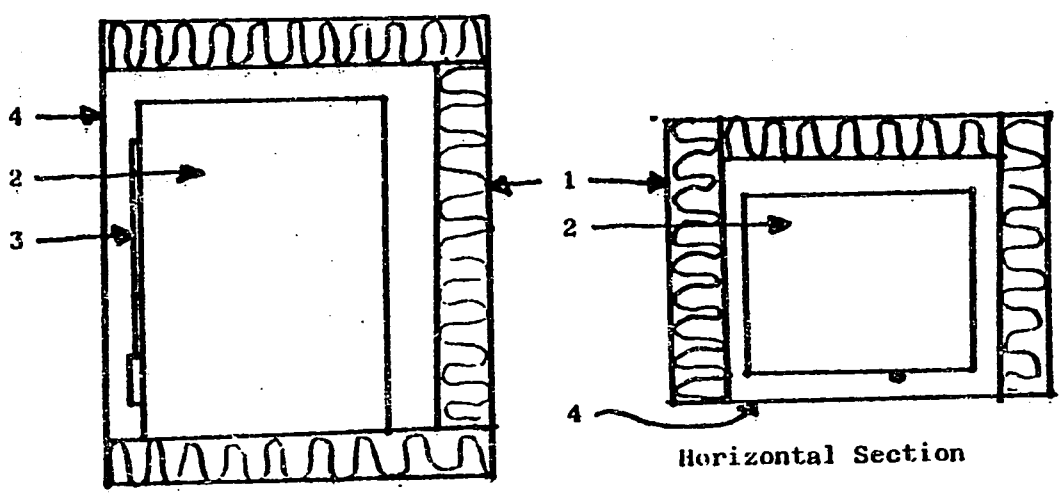

Key

1. Insulation
2. Black-painted can
3. Thermometer
4. Glazing

PHASE II : MUD TECHNOLOGY: LORENA MUD STOVES

HEALTH / NUTRITION

WOMEN IN DEVELOPMENT

THE ROLE OF THE VOLUNTEER IN DEVELOPMENT

PHASE II

	DAY 1	DAY 2	DAY 3
A.M.	Session 1: Traditional Methods of Cooking Session 2: Environmental Health and Sanitation	Session 5: The Role of the Volunteer in Development Session 6: Stove Mass Construction and Technical and Extension Skills	Session 7: Women in Development Session 8: Mud Stove Top Design and Excavation; and Volunteer in Development: Extension Methodology
P.M.	Session 3: Lorena Mud Stoves Session 4: Stove Base Construction		Session 9: Volunteer in Development: International Development, Part I

	DAY 4	DAY 5	DAY 6
A.M.	Session 9, continued: Part II Session 10: Excavation, Carving, Finishing, Firing, and Reading time	Session 13: Women in Development Session 14: Stove Mass Construction, and Design and Volunteer in Development: Extension Skills	Session 16: Volunteer in Development: Introducing New Technology Session 17: Stove Mass Excavation and Extension Skills
P.M.	Session 11: Volunteer in Development: Environmental Impact Session 12: Second Stove Base Construction	Session 15: Health/Nutrition: Custom and Food	

Previous Page Blank

	DAY 7	DAY 8	DAY 9
A.M.	Session 18: Health/Nutrition: Basic Nutrition Session 19: Stove Finishing and Firing	Session 20: Stove Cooking and Operation	Session 22: Stove Information, Resources, Evaluation, and Disassembly
P.M.	Stove Cooking Preparation Reading	Session 21: Stove Operation, Maintenance, Repair, Evaluation and Reading	

OVERALL TECHNICAL OBJECTIVE

Given the required materials and tools, the Trainee will build (or participate in the building of) a Lorena stove. Once the stove is sufficiently dried, the Trainee will operate it for at least one hour so that (a) there is no serious crumbling or cracking, (b) little or no smoke exits through the potholes, and (c) heat and smoke pass through the tunnels and out the chimney top.

Given materials for making simple visual aids, the Trainee will develop and demonstrate effective methods to communicate information to informally educated people, concerning the following: Lorena stove construction and operation, potential applications of the technology, its impact on the roles of rural women, and implications for health status improvement in developing countries.

Has the Trainee established rapport with the audience?
Are visual aids used effectively?
Is the vocabulary simple?
Does the Trainee involve the audience in the procedure?

In addition, the Trainee will demonstrate an understanding of Lorena mud stoves as a new technology, its uses and potential applications in a cross-cultural context, as well as its impact on women and on the health status of the community.

SESSION I:
Traditional Methods of Cooking: A Preface to the Use and Application of Lorena Stoves

Time: 1 hour 45 minutes

Interim Objective: The Trainee will, through practical experience, discussion, and reading, understand and demonstrate a traditional method of food preparation, as well as suggest viable improvements and alternatives to its use.

Overview: The Trainees hear a brief talk concerning the methods of cooking over an open fire, the materials needed and the ways in which such cooking can be made easier and more efficient. Then, in small groups, the Trainees cook something -- tea or coffee, or a simple soup. They then analyze the process and any problems that may have occurred during the experience, and hypothesize how a Lorena might solve some of those problems.

Procedure

1. Introductory Talk: Traditional Cooking Practices

Time: 10 minutes

Trainees hear a brief talk about: (a) cooking over three rocks -- balancing the pot, digging out a hole, methods of preparing the site, (b) firewood and kindling -- type, availability and scarcity, (c) traditional preference for food cooked in this way, (d) possible modifications (e.g. grate, hanging pot), (e) safety during such preparation, (f) health implications (e.g. eye and respiratory ailments), (g) women's roles in food preparation.

2. Fire Building and Cooking

Time: 1 hour

Materials Needed: Matches, kindling, firewood, pot and cover, utensils, large rocks, site for cooking, grate (optional), cups, coffee or herbs for tea.

Trainees are divided into pairs or groups of 3 or 4 to excavate a small area, place rocks, use limited amount of kindling and wood, build a fire, cook a pot of coffee or tea (herb, preferably) and drink it while discussing Procedure #3.

Note: These group divisions can easily serve during Lorena stove construction in subsequent sessions.

3. Small Group Process: Cooking Experience

Time: 15 minutes

Each group names a reporter and Trainees process the experience answering questions:

1. What problems did you encounter?
2. Did you successfully boil the water?
3. What potential health hazards did you notice? Was anyone adversely affected by smoke or burned during the experience?
4. How could the method be made more efficient and healthy?
5. What are several firewood considerations?

4. Discussion on Traditional Cooking and Lorena Stoves

Time: 20 minutes

Groups rejoin and each small group reports their experience to all others. It is suggested that the group assemble at an existing Lorena stove while the Trainer presents a short introductory talk on Lorena stoves and explains how they function. Group discussion follows on how the Lorena stove could facilitate cooking and still preserve tradition. Questions for discussion:

1. How do Trainees view the Lorena as a possible method of replacing or partially replacing the old way of cooking?
2. Is it feasible? What might be some drawbacks?

SESSION 2:
Environmental Health and Sanitation / The Causes of Disease

Time: 2 hours

Note: This session is easily divided into two parts: The Environmental Framework and The Causes of Disease. Part One may be given in a morning class and Part Two after a lunch break, or the sessions may be interrupted by a short break or reading time.

Suggested Resources:

Coburn, Broughton, *Sanitation in Nepal* (Attachment II-2-A)

Werner, David, *Where There is No Doctor*, The Hesperian Foundation, 1978. pp. 131-148, 151-178.

Volunteers in Asia, *Transcultural Study Guide*, VIA, p. 133.

Brownlee, Ann, *Community, Culture and Health Care*, C.V. Mosby Co., 1978, pp. 206-209.

The Trainer may use the above materials as background or reference reading, and may also wish to use:

Samuels and Bennett, *The Well-Body Book*, 1973, Random House: NY, and Bookworks, Berkeley.

Wingate, Peter, *The Penguin Medical Encyclopedia*, Penguin Books, 1978.

Eckholm, Erik, *The Picture of Health*, Worldwatch Institute, Washington, D.C., 1977.

Training Peace Corps Trainees/Volunteers for Health-Related Activities: Guidelines for Trainers, 1978, OPTC.

Peace Corps Trainers' Guide for Basic Health Training for All Peace Corps Volunteers, 1978, OPTC,

and/or other materials relating to personal health maintenance and to environmental health and sanitation.

Objective: The Trainee will, at the end of the session, demonstrate an understanding of the relationship between environmental factors and well-being, especially in regard to waste disposal, water supply and disease vectors, and environmental causes of illness; and will suggest ways in which such issues may be addressed in an ecologically sound manner.

Overview: In this session, the Trainee examines factors in the environment that influence the state of health, and through brainstorming, discussion, and problem-solving exercises will determine ways in which appropriate technologies can address those concerns.

Procedure

Part One: The Environmental Framework

Time: 1 hour

1. (Time: 15 minutes) In groups of 3-4, Trainees generate a list of specific factors in the environment that seem to cause illness, e.g. pollution and industrial waste, dust and wind, contaminated water and food, etc. The Trainer may suggest that Trainees think of their own lives and how various factors determine whether they fall ill or not.

2. (Time: 15 minutes) Trainees categorize the list as to general causes: industrial or other pollution, disease vectors (rats, flies, insects), improper waste disposal, contaminated water supply, any other hazards in the environment that may fit into another category.

3. (Time: 15 minutes) The Trainees, in a large group, find common categories of environmentally influenced or caused diseases and problems.

4. (Time: 15 minutes) The Trainer facilitates the grouping, which may include all or most of the following: disease vectors, water supply and sanitation, industrial or chemical pollution, customs and habits that influence illness (such as smoky fires for cooking, bathing in contaminated water). Some categories overlap; however, the importance of the exercise is to generate many ideas concerning the causes of environmental problems in health.

5. (Time: 15 minutes) Trainees come together to share ideas, and select one or two ways in which appropriate technology extension most probably and realistically could deal with the problem.

Part Two: Causes of Disease

Time: 1 hour

1. (Time: 20 minutes) Trainees hear a brief talk concerning the causes and transmission of disease. The talk should include information concerning: protozoa, fungi, bacteria, viruses, as well as various disease vectors, e.g. flies, vermin, air, water, feces, mosquitos, etc.

2. (Time: 20 minutes) Trainer gives examples of diseases and elicits responses from the Trainees on ways that such illnesses can be prevented, controlled, eradicated, as well as the environmental implications of each.

3. (Time: 20 minutes) Each pair of Trainees selects a cause, or category of illness and writes a short plan on newsprint for approaching the problem, or solving it in an environmentally-sound

way. Plans are posted for others to see, and space provided for comments.

Note:
This session fits in well with exploring the uses and applications of appropriate technology to help solve environmental problems: for example, the Lorena stove reduces the level of smoky, polluted air that must be breathed while cooking over an open fire; latrines or other waste disposal systems reduce disease vectors; grain dryers and other agricultural dryers keep food clean. The session may also be integrated within a health training program and expanded to include more factual information on disease transmission and control. This session may also be incorporated during immunization; Trainees are able to understand more fully the reasons for immunization when they understand disease etiology, prevention and treatment, and environmental issues surrounding epidemiology.

Note:
The individual plans for well-being (see *Phase I, Session 12*) should be collected for evaluation by the Trainer. The plans provide an excellent focus for structured conversations or counseling sessions with the Trainees. By the second week of training, many people show signs of strain or stress-related sickness, and discussion of the plans for well-being, and strategies for personal health maintenance, is often helpful in resolving physical and emotional concerns.

SESSION 5
Lorena Mud Stoves

Time: 1 hour 30 minutes

Interim Objective: The Trainee will examine and analyze various clay-sand mixtures and will determine the proper proportions necessary to build a Lorena stove.

Interim Objective: Through observation of a cross-cultural simulation, the Trainee will identify factors that potentially contribute to, and/or impede the adoption of Lorena stove technology in a rural village.

Overview: In this session, a context is established for the construction, demonstration and use of Lorena stove technology. The Trainee is presented with information concerning the history, development, and technical aspects of the Lorena stove, including an explanation of construction techniques and potential applications. Following an introductory talk, samples of different clay-sand mixtures are examined and compared, then a role-play is presented to illustrate a potential situation of introducing a Lorena stove in a rural village.

Suggested Resources

Eckholm, Eric, *Firewood: The Other Energy Crisis*, Worldwatch Institute Paper #1, 1975.

Evans, Ianto, *Lorena Owner Built Stoves*, Volunteers in Asia, 1979.

Department of Housing and Urban Development, Division of International Affairs, *Handbook for Building Homes of Earth*.

Goldenberg, J. and R.I. Brown, *Cooking Stoves: State of the Art*, Institute of Physics, University of Sao Paulo, Brazil.

Mackey, John T., *Adobe as a Socially Appropriate Technology for the Southwest*, U.S. Department of Housing and Urban Development, January 1980.

Raju, S.P., *Smokeless Kitchens for the Millions*, Christian Literature Society, 1961.

U.S. Department of Agriculture, Bureau of Soils: (1) *Soil Texture Classification*, (b) *Soil Classes*, (c) *Soils Suitable for Stoves*. (Handout)

Procedure

1. (30 minutes) The Trainer begins the session with an explanation of the terminal objectives, and clarifies the manner in which they will be met; an agenda for the day's activities is then

Previous Page Blank

presented, and the schedule of events confirmed with the Trainees. The following material is given as an introduction to mud stove technology: however, before the talk, it is suggested that the Trainer provide an illustration of the stove on newsprint or the chalkboard, including dimensions of stove base, mass, and potholes.

> In many developing countries, there is an increasing shortage of firewood due to inefficient burning methods, poor woodlot management, and growing population pressures. With a scarcity of available firewood, there is greater pressure on supplies of organic materials. Manure and plant residues, better utilized as soil conditioners, are increasingly being used as supplementary fuels. Use of mud stoves, particularly the Lorena model, can conserve 50% or more of the wood normally consumed in open fires.
>
> Greater stove efficiency can have significant impact in two important areas: it diminishes the destructive effects of deforestation that lead to soil erosion and the loss of productive, arable land; and it reduces the amount of time and labor spent searching for and hauling sufficient firewood.
>
> Mud stoves store heat, control the emission of smoke, and provide a convenient surface for food preparation that is removed from the floor. Due to their ability to retain heat, the stoves can serve as a means to warm a house during the night; since there is little smoke accumulation, the environment is cleaner and more conducive to human well-being.
>
> Lorena mud stoves (the word is an amalgam of the Spanish *lodo* -- mud-- and *arena* -- sand) were designed and tested in Guatemala in recent years by Ianto Evans and Donald Wharton. The stoves, made of sand and clay, are adaptable to a number of needs and specifications. Although the designs are varied, they generally include a griddle, sufficient space for 2-3 cooking pots, and an oven. The Lorena stove is low-cost, locally constructed with available materials, and easily maintained; it has, therefore, the potential for being an appropriate method of addressing basic human needs in developing countries.

At the end of the talk, the Trainer may ask for questions; however it is advisable to limit discussion since many of the Trainees' questions will be answered during the practical skills construction time.

2. (30 minutes) After the Trainer presents three different previously-prepared clay-sand mixes, the Trainees take turns feeling the differences in each sample: one being too sandy and falling apart; one too clay-like and sticky, and one just right -- the Lorena stove consistency.

While the Trainees are passing around samples, the Trainer asks them to share what differences they have observed in the samples

in regard to texture, cohesion, and moisture. The Trainer then explains the Palm Test, a method of testing for the right mix, and encourages the Trainees to follow along in doing the same exercise:

> Take a handful of the wet mix and slap it between the hands to make a flat cake. After turning the hand palm down, gradually open it. The cake should fall cleanly off the hand. If it still sticks to the palm, or leaves a lot of material in the hand, the mixture has too much clay and requires the addition of sand. (Sand should be added, and the test repeated, until the mix falls freely from the palm to land in the other hand in a fairly intact manner.)

3. (15 minutes) Two Trainers role-play, with one as a Peace Corps Volunteer and the other as a village woman in her home. The PCV visits the home and through the course of the conversation assesses the possibility for introducing a stove to the home, as well as designing the stove with the assistance of the woman. Role-play should focus on:

> Factors in the woman's life that contribute to, or impede change in cooking/lifestyle, such as types and times of chores and responsibilities (e.g., firewood and fuel gathering, washing, sewing, child care, cooking, agricultural responsibilities, husband's "permission", etc.)
>
> Factors in the PCV's presentation that both contribute to or impede adoption of a new technology (e.g., cultural sensitivity, perception of needs/wants of women, etc.).

When the simulation has ended, the Trainees are encouraged to comment, make observations, and ask questions of the Trainers.

4. (15 minutes) The Trainer facilitates a discussion of factors contributing to, and impeding, change. First, the Trainees are asked to suggest factors in the woman's life that are relevant. These are noted on a chalkboard or newsprint. Then, some aspects of the PCV's presentation are listed that helped or hindered the adoption of the new technology.

A short summary of conclusions should be presented before the session ends.

SESSION 4
Stove Base Construction

Time: 1 hour 40 minutes

Overview: The Trainer leads a hands-on workshop in the assembly of materials for the lay-out and construction of the Lorena stove base, using mud blocks previously fabricated by the Trainees.

Procedure

1. (Time:20 minutes)

Materials Needed: Blocks, adobes, or bricks; hoe and shovel; water; mud mortar; trowel or machete.

The Trainer divides the Trainees into groups of two or three to a stove. (These groups should be arranged by regions Trainees will serve in as Volunteers. This enhances stove construction within a specific cultural framework; each stove reflects customs in one region of the world.) Each group receives a list of materials needed, and is responsible for gathering and bringing them to the stove site.

2. (Time: 25 minutes)

Materials Needed: Paper, pencil

In order to determine stove base size, each group of Trainees (using the information provided in the introductory talk), is instructed to make a side-view drawing of the group's anticipated stove, showing size, shape, and incorporating dimensions for toe space (4 cm) and height. The finished height of a Lorena stove is approximately 75-90 cm. The top half of the stove, consisting of Lorena layers, is approximately 35-40 cm thick, and the base, 40-50 cm thick.

The Trainer should consult with each group and discuss the importance of having a plan/design before beginning, and should provide a realistic assessment of the group's design.

Each group measures, marks, and levels the stove base site in accordance with their design.

3. (Time: 1 hour)

Groups of Trainees build a base (40-50 cm thick), using previously fabricated mud blocks. Bricks, concrete, soil-cement blocks, or mortared rocks may also be used as a perimeter of the stove site After applying mud mortar to the blocks, Trainees fill in the interior of the perimeter with any material (e.g. soil, gravel, rubble, rocks, or other available solid materials), until the material is level with the blocks. It is important to make sure the fill material is completely compacted in order to avoid settling under the weight of the stove.

Previous Page Blank

4. (15 minutes)

Trainees divide into two groups. One lists methods, arguments, style of the PCV that both convince and impede the case for building a stove; the other lists reasons (both spoken and not) given by the woman for and against the adoption of a Lorena stove.

5. (15 minutes)

Next, a general discussion occurs in which Trainees are asked to share with the group what they think are the most important issues to consider in introducing a stove into a villager's home.

SESSION 5
The Role of the Volunteer in Development

Time: 2 hours

Objective: The Trainee will develop a definition for the term "appropriate technology" by first examining criteria for appropriate technology in the United States and, then, how those criteria might be altered for lesser developed countries.

Overview: The Trainees write individual definitions of appropriate technology, and then discuss the criteria for appropriate technology in the United States. After reading two relevant papers, they revise the criteria lists to include the concept of appropriate technology in developing countries, then come to a consensus on a new definition.

Suggested Resources:

de Moll, Lane, and Gigi Coe, *Stepping Stones: Appropriate Technology and Beyond*, Shocken Books, N.Y. 1978. "Changing Possibilities", Tom Bender, pp. 9-10; "New Values", Tom Bender, pp. 47-51; "Building with Mudbrick", Hassan Fathy, pp. 118-123.

CERES, "The Impact of Alien Technology: A Historical Perspective", January-February 1979, pp. 29-33

Criteria Sheet, (Attachment II-5-B)

Materials Needed: Newsprint, markers, pens and paper

Procedure

1. (15 minutes) Individually, the participants write on paper their own definition of appropriate technology.

2. (20 minutes) In groups no larger than five, the participants determine and list the major criteria of appropriate technology in the United States.

3. (20 minutes) The participants are given the papers, "Changing Possibilities" and "New Values" to read.

4. (15 minutes) The groups discuss how the definition of appropriate technology may differ in the developing countries and revise the criteria sheets accordingly.

5. (20 minutes) The papers "Building from Mudbrick", "The Impact of Alien Technology: A Historical Perspective", and the Criteria Sheet are handed out to be read.

6. (30 minutes) Groups revise and write on newsprint a consensus definition of appropriate technology, paying special attention to the following questions:

Is the definition and/or criteria of appropriate technology in the U.S. and the developing world different? Why?

Is appropriate technology a political movement in the U.S.? in the Third World?

SESSION 6
Stove Mass Construction / Technical and Extension Skills

Time: 6 hours

Overview: The Trainer leads the stove mass construction demonstrating sifting and proper mixing of clay, sand, and water, as well as applying layers of the mixture. At two points, the activity is interspersed with discussions about the acquisition of new skills as they relate to the introduction of technological innovation.

Procedure

1. (Time: 1 hour 30 minutes)

Interim Objective: The Trainee will correctly mix water with clay and sand (Lorena), and construct the stove mass so that the stove top is level and there is no slumping.

Materials Needed: Sifter, sand, clay, water, boards (2"x6"), trowel or machete.

Participants should sift sand and clay through ¼" screen mesh, then mix ingredients to correct proportions (use previously explained Palm Test for the correct mixture). When the mix is ready to use, it should be wet enough to shine brightly when a shovel is slid across it, yet dry enough to stand in a pile without much slumping.

Next, layers of mud should be built up, and each addition smoothing into the rest of the layer. The sides should be built straight up to ensure a level mixture at each layer, and should be packed hard around the edges; layers of 5 to 10 cm at a time are applied and allowed to dry before applying the next layer.

Note: The Trainer should circulate among the groups to evaluate the consistency of material, and to assess progress.

2. (Time: 30 minutes)

The Trainer begins with a brief (5 minutes) talk on Lorena stove construction skills, contrasting them with those used in concrete work, and emphasizing the differences (for example, Lorena stove construction involves molding and packing, and is easily carved; concrete, usually poured, is not conducive to change once it is set). As with mud blocks, the skills necessary require an understanding and familiarity with the properties of sand and clay.

Trainees discuss their observations about working with a new technology, focusing on the following questions:

How does it feel to work with unfamiliar tools, materials, and techniques?

What are the similarities and differences in types of skills that you have previously acquired and that are necessary for constructing a Lorena stove?

How does your experience or inexperience with Lorena construction skills affect your confidence with the new technology, and the manner in which you relate to your work group (roles and group interaction)? If you feel uncomfortable with the new technology, how does it affect your role in the group?

3. (Time: 2 hours)

Trainees continue sifting, mixing and layering mud (see Procedure #1).

4. (Time: 5 minutes)

Trainer assembles groups and gives a short talk about the impact of a new technology on the people of the developing world, stressing the importance of understanding and respecting traditional ways, and of the universal difficulty in changing customary work habits and methods for new technologies.

5. (Time: 25 minutes)

In group discussion participants generalize their experience of working with Lorena stoves and hypothesize the way an individual in a developing country might react when introduced to a new technology. Discussion is stimulated by asking the Trainees:

What have you learned about your group's reaction to working with a new technology that might be applicable in a Peace Corps situation?

6. (Time: 1 hours 30 minutes)

Trainees continue with sifting, mixing, and application of mixture until layers in the stove mass attain a height of 35-40 cm. They trim the mass and fill the holes, cut off overhanging lumps, and add mixture where necessary. Finally, Trainees level the surface by gently pulling back and forth with a wet board placed on edge until the surface is flat and smooth.

Assessment: The Trainer should evaluate the consistency of the mixture and the construction of the stove mass, making sure the stove top is level and that there is no slumping on the sides of the stove.

SESSION 7
Women in Development

Time: 2 hours 15 minutes

Objective: Through lectures, discussion, role-play, reading, and the use of a Sex-role Pattern Analysis sheet, the Trainee will examine and discuss individual expectations and observations concerning women's roles both in the U.S. and in developing countries. The Trainee will also satisfactorily examine and discuss the potential impact of Lorena stoves upon women in countries where Peace Corps Volunteers serve.

Overview: This session provides the Trainees with an opportunity to examine culturally defined sex-role patterns and to look closely at the potential impact that a new technology may exert upon women in a traditional setting. First, the Trainer presents a brief talk about cultural perceptions and filters, and hands out the Sex-role Pattern Analysis sheet, instructing the Trainees to check what "expected" behaviors might appear in a representative traditional culture. Then the Trainers role-play a typical scene between a PCV and a village woman, based in part on the points mentioned in the sheet. Trainees check observed behaviors and cues, and then discuss their findings and conclusions about women's roles in a traditional society. The Trainer asks the participants to jot down expectations and subsequent observations in the training community and compare them with the analysis just completed. Finally, time is given to read a short case study about the introduction of Lorena technology, and discussion follows, emphasizing the impact that the innovation has upon women.

Suggested Resources:

Women in Development: A Volunteer Training Resource Book, Session 2; "The Dilemma of Peasant Women: A View from a Village in Yucatan" (Attachment II-7-C); and "Sex-role Pattern Analysis" (Attachment II-7-D) ACTION/P.C., OPTC 1979.

Evans, Ianto, *Lorena Owner Built Stoves*, VIA, pp. 80-90.

Boserup and Liljencrantz, *Integration of Women in Development*, U.N. Development Program, 1975.

Tinker, Irene, *The Adverse Impact of Development on Women*, Peace Corps Trainers Guide for Basic Health Training for All Volunteers, OPTC 1978.

Rihani, May, *Development as If Women Mattered: An Annotated Bibliography with a Third World Focus*, Overseas Development Council Paper #10, 1978, Introduction.

Procedure

Part One

1. (15 minutes) Introductory talk (the following talk is adapted from the *Women in Development Training Resource Book*).

Much of what we see or hear every day we are not aware of. We filter the stimuli we receive according to our culture and our setting. For example, we block out a certain amount of noise level in the city, because it is stress-producing; in an urban area we often avoid eye-contact, or do not greet strangers because we are afraid, or it is not customary. Sometimes the stimuli get through our filters and register in our conscious awareness; such stimuli are called cues, and are common to all cultures. For example, green, red or yellow lights on a road have a high probability of getting through; a long honking of a horn reaches us, and has a different meaning than short bursts; a ringing telephone almost always gets through, as does a different or sharp smell, or a surprising sound. However, what we see or hear in another culture often does not register in our awareness because we are used to different cues, or don't recognize new cues.

Sex-role patterns usually go unnoticed on both a conscious and unconscious level with most people in our culture. The patterns are with us from birth, are usually unobtrusive and, in fact, are often expected and desired. We began experiencing "mothering" by our mothers and, this role, while changing radically as we grow up, remains the primary role of the female. All the sub-roles and behaviors which spring from that division of labor come to be strongly expected and desired as we move through life and out of our primary, familial relationships. Today, given the changing nature of the "woman's place" in society, it is even doubtful that most of us think much or have many feelings associated with such facts like: most secretaries and nurses are female; women do most of the grocery shopping; for the same work, women are paid less than men generally. That's the way it's been as long as we can remember. Thus we still see traditional sex-role patterns acted out in modern, urban society. If changing those patterns in a sophisticated, affluent and educated society has resulted in gradual, evolutionary progress, what should be expected of more traditional, less affluent societies?

2. (20 minutes) The Trainer hands out the Sex-role Pattern Analysis sheets, and instructs the Trainees in how to fill them out. They are asked to check the kinds of cues or behaviors they might expect to find in a traditional setting overseas. The Trainer should advise the participants that the listing may not be all inclusive, and some additional information may be pertinent. Also, some items may not fit, since the checklist is intended to be relevant to many cultures.

3. (20 minutes) Two Trainers (or a Trainee and a Trainer) role-play a PCV and a village woman. The PCV has come to introduce a Lorena stove and hopes to find out more about what the woman does all day, her cooking habits and needs, and when she might be able to participate in designing and building a stove. The woman is busy shelling corn, sewing or doing some other task while the PCV is interviewing her. In the role-play, particular emphasis should be placed on the points mentioned in the Sex-role Pattern Analysis sheet, either through cues or actual dialogue. During this time, the Trainees watch and listen carefully.

4. (25 minutes) The Trainees check the observed/heard column on the checklist, compare it with their expectations, and add any comments or particular examples. They then join with 4-5 other people to discuss findings and conclusions about their perceptions of women in a traditional setting. A reporter notes any common conclusions.

5. (15 minutes) The entire group meets and the reporters share conclusions with all participants. The Trainer asks the group for suggestions as to what those observations indicate about the Trainees' perceptions regarding sex-roles and traditions, and asks how the Trainees felt about the observation and ensuing discussion.

6. (5 minutes) The Trainer instructs the Trainees to observe people in the local community, and in a different color ink, make note of both expectations and observations concerning women's roles, then compare those with the expectations/observations made in this session. (This exercise will be discussed at the start of the next Women in Development session.)

Part Two

Note: There may be a short break between the two parts.

1. (15 minutes) The Trainees read a short case study about the introduction of Lorena stove technology in Guatemala (pp. 80-90 in *Lorena Owner Built Stoves*).

2. (20 minutes) The groups analyze the case study (either in groups or as a whole), and then discuss the following questions:

What are the customs, practices, styles associated with cooking in the community? Is the height of the stove culturally appropriate?

Does the stove design consider the type and size of fuel normally used, and the kind of food traditionally prepared?

Will the reduction in smoke alter pest control in houses with thatched roofs?

How will a change in cooking devices and procedures affect the traditional work pattern of women in the community?

What aspects of a village woman's daily life would be directly affected by the introduction of a Lorena stove?

3. Trainees are given the article "The Dilemma of Peasant Women: A View from a Village in Yucatan" (Attachment II-7-C) to read after the session. An optional activity can occur in the evening or sometime after the session: Trainees gather to discuss the article and the issues it raises. If time allows, the discussion may occur at the beginning of the next Women in Development session (*Session 13*).

SESSION 8
Stove Top Design and Excavation / The Role of the Volunteer in Development: Extension Methodology

Time: 6 hours

Overview: The Trainer presents an introductory talk on the importance of establishing design criteria for a stove top, taking into account the different cooking customs and needs of different cultures. After completing a top view drawing of their own stoves, and following a discussion on extension techniques, led by the Trainer, the Trainees practice the use of visual aids in communication/extension work in a role-play at their group's stove. Based on their designs, the Trainees excavate the outlined potholes and connecting tunnels.

The session concludes with time to do assigned reading on Lorena stoves and for following sessions in Volunteer in Development and Health/Nutrition.

Suggested Resources:

Extension Methodology materials (1) Federal Extension Service, U.S. Department of Agriculture, Educational Materials for Extension Workers, and (2) World Neighbors in Action Communication, Volume 10 #1E.

Procedure

Part One: Stove Top Design

Time: 1 hour

Materials Needed: Newsprint, Writing implements

1. (15 minutes) Using the blackboard or newsprint, the Trainer introduces the session's activities by designing a hypothetical stove top. It should meet the following design criteria: for use by a right-handed cook, able to accommodate three cooking vessels and a hot water producing pot, and include a one-way tunnel system connecting all potholes.

2. (20 minutes) Trainees are asked to list on paper the design criteria for a stove stop for the country in which they expect to serve.

3. (25 minutes) Next, Trainees assemble in their stove groups (groups were previously agreed upon by region of the world where Trainees expect to be Volunteers), and are asked to produce a top and side view drawing of their stove top which reflects the intended spacing of pots, size and need of potholes. The design should also indicate the location of a firebox and tunnels.

Part Two: Role of the Volunteer in Development: **Extension Methodology**

Time: 1 hour 30 minutes

Interim Objective: Given a description of a family's cooking customs and needs, the Trainee will make a top-view drawing of a stove which is readily understandable by his or her peers (role-playing villagers) and which represents a design responsive to the cooking customs and needs of the hypothetical family.

Materials Needed: Newsprint, writing implements, pots, pans.

1. (20 minutes) The Trainer begins with a short talk on extension skills, including a brief description of the differences between a method and result demonstration. Attachment II-8-E: Extension Skills, is handed out to all Trainees, and the Trainer discusses each of the outlined points and asks that the Trainees take special note of Points #4, #5, #6. The Trainer invites questions and discussion on any of the material before continuing to the next task.

2. (20 minutes) The Trainer explains the purpose of the activity (an exercise in role-playing and extension skills), and Trainees assemble into their groups at their newly built stove. Within each group, one Trainee is the PCV, one role-plays a villager, and another is an observer. The PCV is to engage the villager in conversation, introduce Lorena stoves, assess cooking needs of his/her family, and through the use of newsprint, make a paper pattern of a stove top, showing a layout of the villager's pots.

3. (20 minutes) Each group repeats Procedure #2, but with the Trainees changing roles.

Note: The Trainer evaluates each Trainee's design utilizing the following Assessment Checklist:

Is there proper spacing between holes?
Is there sufficient number of holes to meet needs?
Is there proper placement of damper slots?
Is there enough space between holes and sides of stove?

4. (10 minutes) Each group, using Attachment II-8-F: Extension Chart, evaluates the performance of the PCV and discusses observations regarding the Trainee's ability to communicate and use visuals effectively.

5. (10 minutes) Each group repeats Procedure #4.

6. (10 minutes) All groups assemble to share what they learned from this experience and how they might apply the discussion of extension techniques/communication to the Training Program, and to their future role as extensionists. The Trainer summarizes key points and emphasizes the role of the Volunteer in development as an extensionist/facilitator and the importance of good communication skills.

Part Three: Stove Excavation

Time: 1 hour 45 minutes

Materials Needed: Spoon, trowel, pots, pans

1. (25 minutes) Each stove group, using previously made drawings, lightly places pots on stove top and marks potholes and tunnel system, showing location of firebox, dampers, and chimney. (There should be no less than 10 cm between potholes and at least 10 cm between potholes and the edge of the stove; see pp. 33-34 in *Lorena Owner Built Stoves* for recommended distances and stove top design).

2. (1 hour 20 minutes) Trainees excavate mud from the firebox, tunnels, and potholes, keeping cutting tools wet. (See *Lorena Owner Built Stoves* pp. 35-39 for more detailed information on carving and excavations.)

Part Four: Clean up

Time: 15 minutes

Trainees organize themselves to clean up the working areas, and clean tools as necessary.

Part Five: Reading

Time: 30 minutes

Trainees are provided with reading time.

SESSION 9
The Volunteer in Development: International Development - The Green Revolution: Successes and Failures

Time: 3 hours (held on two successive days)

Objective: The Participants will demonstrate an understanding of development strategies based on high level technology transfer such as the Green Revolution.

Overview: Based on the readings, the participants will identify and investigate the major issues surrounding the successes and failures of the Green Revolution. In the form of a debate, they will prepare and present arguments both supporting and criticizing the planning and implementation of the Green Revolution strategy and will propose alternative solutions.

Suggested Resources:

Changes in Rice Farming in Selected Areas of Asia, International Rice Research Institute, Los Banos, Philippines, 1975.

Warpeha, Paul, *Perceptions of Technology: A Study of the Iluman Project*, NTIS, Washington, D.C. 1979; Introduction.

Gussow, Joan Dye, *The Feeding Web*, "Genetic Improvement of Crop Foods", Norman Borlaug, 1978, pp. 395-399.

Franke, Richard, *Natural History*, "Miracle Seeds and Shattered Dreams in Java", 83(4) 10-12, Jan. 1974.

Brush, Stephen, *Natural History*, "Farming the Edge of the Andes", 86(5) 32+, May 1977.

Sowing the Green Revolution, The International Institute of Tropical Agriculture, Ibodan, Nigeria, 1970.

Rodale, Robert, *Organic Gardening and Farming*, "The Greening of the Green Revolution", 23(7):34-40, July 1976.

Lappe, Francis Moore and Joseph Collins, *Food First*, Balentine: NY, 1978, revised edition, pp. 121-177.

Procedure

Part One

Time: 1 hour

1. (5 minutes) The facilitator makes introductory remarks on the patterns of high technology transfer in International Development (reference: Introduction from Warpeha, 1979).

2. (10 minutes) The facilitator explains the debate procedures (see Part Two-2) and the roles of the group members.

Personal Copy

3. (25 minutes) The participants divide into three groups: one takes the role supporting the Green Revolution; the second, against; and the third arrives at possible strategies for implementing alternative agricultural development programs which would better address the needs of developing countries. These three groups prepare for the following day's sessions by assigning roles among their members for presenting their cases and strategies. At this time the readings on the Green Revolution (in *Suggested Resources*) are made available to the group members.

4. (20 minutes) Reading.

Part Two

Time: 2 hours

1. (5 minutes) The Trainer reviews debate procedures and groundrules.

2. (5 minutes) Groups #1 and #2 Debate. Each group delivers a brief (2½ minute) statement of their position.

3. (10 minutes) Each group expands their position (5 minutes), stating facts and supporting evidence.

4. (10 minutes) Each group has 5 minutes to ask the other group questions.

5. (10 minutes) There is open questioning.

6. (10 minutes) Final summation - Each group takes 5 minutes to make a final statement of their position.

7. (15 minutes) Group #3 delivers their ideas on concrete steps that could be taken to develop appropriate strategies as alternatives to the Green Revolution.

8. (25 minutes) A general discussion finalizes the session.

9. (30 minutes) Individual reading time is provided for the following articles:

Wade, Nicolas, *Sahelian Drought: No Victory for Western Aid*

Ehrlich, Paul, and John Holdren, *"8,000,000,000 People? We'll Never Get There"*.

Note: Bibliographical data for the two articles appears on page 151.

SESSION 10
Stove Excavation, Finishing, Firing / Reading

Time: 2 hours

Overview: Trainer leads hands-on workshop (continued from the 8th session), completing stove excavation and finishing, as well as practicing stove firing and damper operation. Time is allowed at the end of the session for readings on combustion and chimneys.

are these covered in session

Procedures

Time: 1 hour 45 minutes

Materials Needed: Scrap sheetmetal, tin snips, and chimney pipe.

1. (30 minutes) Trainees continue with the excavation of mud from the firebox, funnels, chimney hole, and potholes, paying close attention to the following: the shaping of potholes to assure snug fitting pots; the creation of mounds at the bottom of potholes to enhance quick and even heating of pots, the shape of the firebox and firebox opening; and the depth of the chimney hole (8 cm lower than the chimney inlet tunnel). For more detailed information see pp. 35-41 in *Lorena Owner Built Stoves*.

2. (15 minutes) Participants construct damper doors using scrap sheetmetal. First, the corners of the dampers are cut and handle is made, either rolled, or from two pieces of wood. (See pp. 42-43 in *Lorena Owner Built Stoves*.)

3. (10 minutes) Then the chimney pipe is installed (e.g. metal, bamboo, or clay). It should be 4 cm in diameter and should extend higher than the top of the roof.

4. (30 minutes) The finishing details on the stove are completed, any remaining holes or cracks are filled, and all surfaces are smoothed. The edges of the stove should be rounded or leveled.

5. (25 minutes) Note: The first fire should be held off for 2 weeks until the stove is quite dry. However, a small kindling fire just inside the firebox can be started after the chimney is installed, pots are placed in all the holes, and the dampers are opened. The Trainees are encouraged at this point to close and open dampers to experience how combustion takes place and how the air flows through the tunnels. It should be noted that with new stoves, a lot of steam and smoke is to be expected, due to the wet Lorena and incompletely burned gases.

6. (10 minutes) Time is provided so that Trainees may read pp. 44-50 in *Lorena Owner Built Stoves* to better understand firing and cooking, using a Lorena stove. (There will be practical experience during later Health/Nutrition sessions.)

SESSION 11
International Development: Environmental Impact

Time: 2 hours

Objective: The participants will gain and demonstrate an understanding of the ways in which overpopulation and misdirected development projects have had an adverse impact on the environment, including the effects of rapid deforestation and a resultant scarcity of firewood.

Overview: Based on the assigned readings, the Trainees discuss global environmental issues, concentrating on the environmental impact of development strategies, population, and the firewood crisis and its relationship to Lorena stove technology.

Suggested Resources:

Wade, Nicholas, *SCIENCE*, "Sahelian Drought: No Victory for Western Aid", 185:234-237, 19 July, 1974. Also in *The Feeding Web*, pp. 360-364.

Ehrlich, Paul, and John P. Holdren, *Development Forum*, "8,000,000,000 People? We'll Never Get There", April 1976. Also in *The Feeding Web*, pp. 35-38.

Eckholm, Erik, *The Other Energy Crisis: Firewood*, Worldwatch Paper #1, 1976 (The Worldwatch Institute, Washington, D.C.)

Note: Participants will have read, "Sahelian Drought: No Victory for Western Aid" and "8,000,000,000 People? We'll Never Get There", assigned during the previous session on International Development.

Procedure

1. (15 minutes) Individuals record on paper what they consider to be the five main environmental concerns addressed by the readings.

2. (30 minutes) In groups of 3-5, the participants share their observations and by group consensus rank the relative importance of the points and discuss ways in which development programs can deal with them.

3. (30 minutes) The article, *The Other Energy Crisis: Firewood*, is distributed and read by the participants.

4. (45 minutes) The facilitator leads a group discussion based on the following questions:

   What additional issues are brought up by the article?

   What are some ways that PCVs can assist people to become aware of environmental deterioration?

Previous Page Blank

Can wood-conserving stoves realistically lower the demand for firewood and limit deforestation?

Is overpopulation the key problem behind environmental catastrophe?

Note: At this stage, each group of 2-3 Trainees has built one stove. To assure a greater proficiency in Lorena stove construction, it is strongly recommended that Trainees repeat the process; as with any new technology, one needs continued practice to understand both the process and operation. Since Lorena stoves will be introduced to villagers for use in the home, it is beneficial, whenever possible, to help the Trainees gain confidence in working with the technology before going to a Peace Corps site.

The format for building stoves a second time may vary according to the Training Program. Depending on the needs of Trainees and time available in the program, the following options can be exercised:

A. The second stove may be completely built anew, beginning with the base construction, including new clay and sand for mixing.

B. After removing the Lorena mass, the second stove may be built from the original base or floor, using the same mix or mixing anew.

C. The tunnels and potholes can be caved in, requiring the stove mass to once again be excavated and carved. This option requires the minimum amount of work possible for the Trainees to complete and still gain valuable experience.

In the Farallones Training Program, we have chosen Format B; at least one group builds the second stove from the original base and another from the floor using the same Lorena mix. In any format, at least one of the original stoves should be left for health/nutrition classes to provide continued experience in using and becoming comfortable with the technology. In addition, the remaining stove may develop cracks as it dries, affording the opportunity for Trainees to analyze and repair faults - an important component in building stoves.

In the following sessions, Trainees should take turns each day in being the PCV during hands-on work, assuming the responsibility for coordinating and communicating the activities of the work session. The one or two other Trainees should role-play villagers, and be encouraged to ask questions of the PCV about all aspects of the construction process. Time is alloted at the end of each day for feedback from peers and an evaluation of the Trainee's skills as an extension agent/facilitator.

SESSION 12
Construction of Second Stove Block

Time: 2 hours

Overview: Trainees begin the construction process for a second Lorena stove by disassembling at least two stoves to be built anew. The building of a second stove starts in this session and continues through a number of subsequent sessions.

Procedures

1. (45 minutes)

Trainees choose at least two stoves to dismantle, keeping the Lorena mix apart from the stove base and rubble, which in the case of one stove, should be removed from the area.

2. (1 hour)

Trainees begin the construction of at least two new Lorena stoves: one through building the stove mass on an existing stove base, using the same mix; and the other directly from the floor, in which case the ground/floor must be level before construction begins. For further details on the construction process for layering of the stove mass, see *Session 6*, page 137.

3. (15 minutes) Stove groups decide who will be the PCV during each of the following hands-on sessions, and how they see that role being implemented in their particular group.

SESSION 13
Women in Development

Time: 2 hours

Objective: The Trainee will identify and examine male and female characteristics that suggest sex-role stereotypes, and will develop a future image of more equitable relationships and social structures.

Overview: The Trainees participate in a discussion and exercise during which they explore values regarding male and female characteristics and examine the stereotypes that may be implied by those designations. The Trainees then describe skills that both men and women need to participate fully in personal, family, community and national development. Ideas are then shared, and the Trainees develop an image of what relationships and social structures should resemble in a more equitable society.

Suggested Resources:

Jedlicka, Allen, *The Transfer of Technology to Women: Some Issues to Consider*, Peace Corps Programming and Training Journal Vol. 4, #6.

Women in Development: A Volunteer Training Resource Book, ACTION/ Peace Corps, OPTC, 1979.

Attachment II-13-H : Worksheet

Materials Needed: Chalkboard or newsprint, markers, pens, tape.

Note: This session is adapted, in its entirety, from *Women in Development: A Volunteer Training Resource Book*. For a more complete version of this session, please consult Session 3, pp. 28-33 in *WID*.

Procedure

1. (10 minutes) The Trainer reviews the objective and presents an agenda for the session. A few comments about the purpose of the session might be:

> We can all benefit from understanding the differentiations we make regarding male and female characteristics, especially those that point to sex-role stereotyping. In order to think about how things might be in the future, it is helpful to examine how we see reality now, and then go on to visualize what we would hope to see later. This session will focus on some recent research, and then move to looking at developing a vision of the future.
>
> (Additional comments may be found in the *Women in Development* resource manual.)

2. (15 minutes) Attachment II-13-H : Worksheet, is distributed; the Trainer begins a list on newsprint, in view of all of the participants, after asking for reactions to the question, "Give me 10 characteristics of mentally healthy or well-adjusted men in our

Previous Page Blank

society." (Room should be left for two other columns, or extra newsprint should be posted.) The Trainer should encourage short and quick responses. As the public list is filled in, Trainees should be encouraged to fill in the appropriate columns on the Worksheets for future reference. Next, the Trainer asks for a list of ten characteristics of mentally-healthy or well-adjusted women in our society, and the listing is repeated onto the Worksheets. Finally, a list is generated of 10 characteristics of a mentally healthy *person*.

3. (15 minutes) The Trainer explains that the exercise resembles research done in the early 1970's, and asks the Trainees, "Given these lists, what do you think the researchers concluded?" The group should interpret the lists (the lists may not mirror research findings but the study results should still be given). If the group cannot generate a conclusion, the Trainer should provide one.

The study results showed that there were "male" descriptors and "female" descriptors, which reinforced their theory that in the U.S. males and females are seen stereotypically, and that certain behaviors are only appropriate for one or the other. Some specific characteristics given are:

> Males are: strong, ambitious, successful, goal-oriented, rational, independent, aggressive.
>
> Females are: nurturing, motherly, emotional, nice, dependable, attractive, soft.
>
> Person is: strong, independent, has a sense of humor, attractive, successful.

The study concluded that:

> There is a high correlation between the list of "men" and "person", and a low correlation between "women" and "person". A woman who moves to traits of mentally healthy person is often labeled "acting like a man" - a put-down to many women. Men get punished or put-down when they work to balance their emotional and rational sides.

4. (5 minutes) The following points are then raised:

> When we speak of "women in development" we are creating an expectation of a community where both women and men can develop the richness of their person - both the emotional and rational, both the independent and the collaborative.
>
> To speak of women in development is to affirm that women should participate in decisions which affect their lives and family; it is to suggest that men will benefit by collaborating with their wives, daughters and sisters.
>
> However, we must recognize that different people's

perceptions of "ideals" --especially in different cultures-- may differ from our own.

5. (10 minutes) Trainees should group into pairs, and then half the pairs are given one task, and the other half a different one.

Task A: Describe what skills women will need to possess in order to participate fully in personal/family/community/ national development.

Task B: Describe what skills men will need to possess in order to participate fully in personal/family/community/ national development.

6. (10 minutes) Trainees are given time to write notes in the appropriate column of their worksheet.

7. (20 minutes) A pair working on "men" joins with a pair discussing "women". They share ideas and develop an image of what relationships and social structures would be like if the setting were more equitable. (Groups should be encouraged to fantasize ideal situations; however,if this is difficult, they may describe values, characteristics and skills men and women should share to participate more equally in development.) During this procedure, a reporter should be selected to inform the larger group of the image developed in the quartet.

8. (25 minutes) Each report is given, and should be limited to 3-4 minutes. Any comments or insights about the group process may be discussed at this time.

9. (10 minutes) The Trainer requests that the Trainees review their worksheets and think about what they have learned in this session. If there are any insights or feelings that the Trainees want to share, these should be encouraged. The Jedlicka article may be reproduced and handed out at the end of the session for further perspective.

SESSION 14
Stove Mass Construction and Design / Volunteer in Development: Extension Skills

Time: 4 hours

Overview: Trainees assemble into stove groups with one Trainee role-playing as PCV for the entire session. Groups continue constructing their second stove - building the stove mass and designing the stove top - with the PCV coordinating the activities as an exercise in practicing communication skills. The session concludes with feedback and evaluation of the PCV as an extensionist/facilitator.

Procedure

1. (2 hours 30 minutes)

Trainees continue layering Lorena mix, making sure to pack each layer well and smooth the surface. For further details on the process, see *Session 6*, page 137.

2. (1 hour)

The Trainee, role-playing a PCV, in consultation with the other two Trainees (villagers), considers the design criteria for the stove top based on asking questions and assessing the villagers' needs. The PCV, positioning pots on the stove top, tries many different combinations for use of the pots until the group, by consensus, selects a pattern upon which all agree. The group outlines the position of the pots and connecting tunnels, as well as the location of the damper slots, chimney pipe, and firebox.

3. (30 minutes)

Concluding the session, the Trainees, in each of their stove groups, evaluate the performance of the PCV in the use of education and communication skills. Feedback should include the PCV's ability to demonstrate clearly and succinctly the tasks at hand, and should examine the PCV's consultative skills in listening, attending, responding, and counseling of fellow Trainees. In addition, it is helpful for the PCV to communicate personal feelings about having the responsibility of training others and searching for the fine line between active and passive teaching.

Previous Page Blank

SESSION 15
Custom and Food

Time: 2 hours 10 minutes

Objective: Through discussion, questionnaire and comparison with other's views, the Trainee will demonstrate an understanding of the customs and values associated with food that appear throughout the world.

Overview: The Trainer presents a brief talk on the ways in which people categorize food, and distributes a short article on "foodways". The Trainees are given a pre-test to determine their knowledge about customs and beliefs concerning food, which is then discussed. Each Trainee administers a foodways questionnaire to two people, and then discusses the interviews with others in the training group. Another short talk is interspersed, this time about food classification systems and the traditional ways in which nutritional needs are met throughout the world. The Trainees examine their own concepts about food in the U.S. and generate a list of favorite foods that they categorize according to customary food classifications.

Suggested Resources:

Handout: Jelliffe, Derrick, "Custom and Food", in *Child Nutrition in Developing Countries*, AID, 1963.

Katz, Deborah, et.al., *Food: Where Nutrition, Politics and Culture Meet*, Center for Science in the Public Interest, 1976 (pp. 8-10 "Foodways")

Gussow, Joan D., ed. *The Feeding Web*, "Issues in Nutritional Ecology" pp. 209-210; 122-125; 219-225; Bull Publications, 1978.

Goldman, Laura, *Perspectives of Balance: A Study of Traditional Health Practices in Iluman, Ecuador* .

Attachment II-15-I : Pre-test

Attachment II-15-J : Food Custom Questionnaire

Materials Needed: Chalkboard or newsprint, markets, pens, and paper.

Procedure

1. (10 minutes) Introductory talk: The Trainer presents the agenda for the session (refer to procedures), and identifies the concept of foodways: the societal patterning of food consumption. It should be mentioned that seldom do people utilize all food sources available to them; although nutrients may be in good supply, custom dictates what is and what is not considered edible.

2. (10 minutes) Reading of "Foodways" article (pp. 8-10 in *Food: Where Nutrition, Politics and Culture Meet*).

Previous Page Blank

3. (15 minutes) The pre-test (Attachment II-15-I) is distributed and the Trainees fill in true or false for concepts and facts, then answer yes or no to those questions concerning food values.

4. (15 minutes) Trainees discuss their answers with 2 or 3 others in the group, focusing on different values that may appear. (The Trainer may post the correct answers to the questions concerning facts and concepts on newsprint or a chalkboard. The pre-test may be collected.)

5. (40 minutes) The food custom questionnaire (Attachment II-15-J) is distributed and the Trainees are instructed to administer it to two people, then discuss their interviews with two people they did not question. (The Trainer may collect the questionnaires.)

6. (20 minutes) A talk is given by the Trainer on the food classifications in "Food Custom Questionnaire", and the various categories should be jotted down on a sheet of newsprint or on a chalkboard: e.g. cultural super foods, physiological group foods, prestige foods, sympathetic magic foods. Examples are given for each category, using traditional societies as well as for U.S. (e.g. cultural super food: corn, wheat, millet; prestige foods: guinea pig, sirloin steak, eggs, etc.) (The Trainer may refer to *Recommended Resources* for more information.) At the end of the talk, the Jelliffe article is distributed.

7. (20 minutes) The Trainees brainstorm a list of 10 favorite foods in childhood, and the ten favorite foods now. They then categorize them as to the type of food they represent in the Jelliffe food classification list. (This exercise may be done in pairs to faciliate the generation of the list.) The Trainees save the lists, which will be used in the next Health/Nutrition session.

SESSION 16
The Volunteer in Development: Promoting a New Technology

Time: 2 hours

Objective: The Trainee will develop extension/communication skills during a role-play exercise that emphasizes a community needs assessment and a discussion, with villagers (role-played by peers), of the benefits and drawbacks of Lorena stove technology.

Overview: The following session is designed to provide Trainees some experience in promoting a new technology - Lorena stoves - to their fellow Trainees. Some Trainees role-play PCVs and others, villagers. Each participant is given an information sheet listing the advantages and disadvantages of Lorena stoves. The role of the PCV is to focus on an assessment of the needs of the villager and family, and then to convince the villager of the value of having a Lorena stove. In convincing the villager, the PCV provides an explanation of the construction and operation process, and of the various health, economic, and environmental benefits of using the stove.

Procedure

1. (20 minutes) The Trainer introduces the activity with an explanation of the exercise. Five Trainees are asked to volunteer to role-play PCVs, and are then asked to leave the room and examine Attachment II-16- K : Advantages of the Lorena Stove. Meanwhile, the Trainer distributes Attachment II-16- L : Disadvantages of the Lorena Stove, and asks the remaining Trainees to study it, then volunteer to role-play villagers. One by one, the five Trainees are called back and, interacting with "villagers", assess their needs, introduce the concept of a new technology, including various health, economic, and environmental considerations, and then convince the villagers of the value of having a Lorena stove. If successful in convincing the villagers, the PCV then explains the construction and operation process.

2. (1 hour) One at a time, PCVs meet villagers and promote Lorena stove technology. The Trainees not directly participating in the encounter are asked to jot down observations on both the substance of the exchanges (for later discussion) and on the style of the PCV in introducing and explaining Lorena stoves.

3. (30 minutes) All the Trainees assemble for a discussion of the following:

   Any observations made during the role-play that need clarification (e.g. health issues, economics, and socio-cultural factors, etc.), to PCVs on their performance, and on their style in communicating the advantages of a stove, and educating the villager as to how the stove is constructed and operated.

   Trainees who role-played a PCV should be encouraged to share personal feelings about the experience with the rest of the group.

4. (10 minutes) Led by the Trainer, the group then summarizes what they learned from the exercise, especially concerning the introduction of a new technology and the importance of understanding the cross-cultural context. The Trainer elicits suggestions from the group and lists on newsprint what the Trainees say they have learned that can be applied to their role as development workers.

SESSION 17
Stove Mass Excavation / Extension Skills

Time: 2 hours

Overview: Trainees, in small groups, continue working on their second stove by excavating the stove mass, according to design criteria established in *Session 14*. Again, each group has a designated PCV for the hands-on work, with feedback provided by group members at the end of the session on the PCV's extension skills.

Procedures

1. (1 hour 30 minutes) Trainees excavate firebox, tunnels, potholes and carve damper slots. For details, see *Session 10* (Construction of first stove).

2. (30 minutes) Trainees in each of the small groups evaluate the performance of the PCV, including the use of education and communication skills. In addition, the PCV should communicate any feelings about training others and coordinating the activities.

SESSION 18
Basic Nutrition

Time: 2 hours 15 minutes - 2 hours 40 minutes

Objective: The Trainee will become familiar with the basic nutritional needs of people, and will correctly identify sources of nutrients in a variety of diets, both in the U.S. and in host country situations. Based on this knowledge, the Trainee will suggest methods and strategies to address basic nutritional concerns that might be applied during Peace Corps service.

Overview: After reviewing materials about foods and essential nutrients, the Trainees identify sources of nutrients in their lists of favorite foods compiled during *Session 15*, then compare their findings with others in the group. They examine their recent diets and evaluate nutritional values and deficiences, filling in the first day of a four-day diary. Using case studies, the Trainees then recommend strategies for meeting nutritional needs in a variety of situations.

Suggested Resources:

Handout: Charts A and B, pp. 114-115 in *Organic Gardening*, July 1979, Rodale Press, Inc.

Katz, Deborah, et.al., *Food: Where Nutrition, Politics and Culture Meet*, Center for Science in the Public Interest, 1976; pp. 30-41; 46-48; 53-54; 85-86; 89-90.

Shack, Kathryn, ed., *Teaching Nutrition in Developing Countries*, Meals for Millions Foundation, 1977; pp. 114-123.

Lappe, Francis Moore, *Diet for a Small Planet*, Ballantine Books, 1975.

Jelliffe, Derrick, "The Human Diet" *in Child Nutrition in Developing Countries*, AID, 1969 (available from Superindendent of Documents, U.S.G.PO)

Brownlee, Ann, *Community, Culture, and Care*, pp.190-195

Werner, David, *Where There is No Doctor*, pp. 107-130.

Attachment II-18-M : A Four Day Food Diary, adapted from Center for Science in the Public Interest.

Attachment II-18-N : Problem solving in Nutrition: selected case studies.

Attachment II-18-O : Plant protein complementary chart.

Attachment II-18-P : The Food Square.

Materials Needed: Chalkboard or newsprint, pens and paper.

Previous Page Blank

Procedure

1. (25 minutes) The Trainer distributes handout: "Foods and Essential Nutrients" from *Food: Where Nutrition, Politics and Culture Meet*, pp. 30-41, and allows time for reading. (This procedure may be omitted if the Trainees are provided with time to read before this session. However, it is a good idea to review the article, ask for questions, and find out if the Trainees have read it.)

2. (20 minutes) The Trainer may give a brief talk on nutrient classification that includes the following illustration:

   There is a division (as illustrated in the game of 20 questions), among animal, vegetable (plant) and mineral sources, and such divisions may help explain the nutrients necessary to all humans. Foods that come from animals and plants are sources of proteins, vitamins, fiber, fats, carbohydrates, and water; minerals provide a number of nutrients, like iron, phosphorus, calcium and other trace elements that are crucial to good health.

   The Trainer makes three columns: plant, animal, mineral, and on the left lists some basic nutrients: proteins, vitamins, etc. Trainees are asked to list some foods from each source that are known for a particular nutrient (e.g. potatoes, carbohydrate, from plant source; steak, protein, from animal source). In summary, the Trainer mentions that nutrients come from many sources, and there are many ways to receive the basic nutrients.

Note: This exercise is optional, and may be omitted if there is not sufficient time. The information is also presented in other exercises and readings.

3. (10 minutes) The Trainer distributes Attachment II-18-O : Plant protein complementary chart, and Attachment II-18- I : The Food Square. The Trainees review the charts with the Trainer.

4. (30 minutes) Note: While the Trainees are completing the written part of this exercise, the Trainer should post sheets of newsprint on which have been written categories of nutrients, e.g. protein, carbohydrates, etc.

Using the favorite foods lists (from *Session 15*) the Trainees identify primary nutrients in each food. Then they talk to others and look at foods included on other people's lists. When they find a food in common with someone, that food, according to its primary nutrient, is listed on the appropriate sheet of newsprint. After 20 minutes, the activity should stop, and people should circulate and look at the lists. Questions for thought are: What nutrients seem to appear the most in "favorite" foods? What nutrients have not been identified on the newsprint? What did you find out about people's food preferences? Are "favorite" foods

usually nutritious? Have food preferences in the group changed in nutritional value since childhood?

5. (20 minutes) Attachment II-18-M : Four-Day Food Diary is distributed, and in pairs, the Trainees discuss the day's (or yesterday's) diet. They help one another fill in the first day of the diary, and are instructed to maintain the diary for the next three days. (It is helpful to record the Four Day Food Diary again at the end of training to measure any differences or improvements in the diet.)

6. (45 minutes) Note: Groups for this exercise may be formed by asking that pairs of Trainees join so that there are four people.

Each group receives Attachment II-18-N : Problem solving in nutrition, containing a nutritional problem in case study form. A recorder should be named in each group, and after 5-10 minutes of working on the case study, each group reports to the rest of the Trainees, presenting the problem and a viable strategy for improving nutrition in that particular situation.

Optional exercises: A dart board may be constructed, using nutrients, or examples of sources of nutrients within the circles (e.g. protein in the center, energy foods in the second circle...) Game variations include making a balanced meal by hitting certain foods or nutrients, choosing all of one category, aiming for foods that are only plant or animal in origin, or foods specific to certain areas of the world.

Nutrient charts may be made as part of an extension/education session and posted throughout the Training Program.

SESSION 19
Stove Finishing and Firing / Stove Cooking Preparation / Reading

Time: 6 hours

Overview: During this session, Trainees finish their second stove and practice igniting and regulating the fire. Again, within each group, one Trainee is designated as the PCV for the hands-on activity. Time is provided at the end of the session for preparation and organization before the following day's Lorena cooking class. The remaining time is utilized for reading assignments.

Procedure

1. (1 hour)

The Trainees, in approximately 40 minutes, construct damper doors using scrap sheetmetal; the corners of the dampers should be cut and either a rolled handle or one from pieces of wood is made. Care should be taken to install the dampers so that the edges of the slits are not pulled away.

Then the participants install a chimney pipe (of metal, bamboo, or clay) that is 4" in diameter and extends higher than the top of the roof. For the first firing, however, a short section of pipe may be used.

2. (1 hour)

The Trainees complete finishing details on the stove, filling remaining holes or cracks and smoothing all surfaces. Then the edge of the stove is rounded or leveled.

At the end of the work time, the Trainer speaks to each group separately about the option of varnishing or painting a stove, and the importance of aesthetics in a village home.

3. (30 minutes)

The chimney should be installed, pots placed over all holes, and dampers all opened. The first fire should be small, using only kindling and located just inside the firebox. Trainees are encouraged to close and open the dampers and develop a feeling for the stove's operation.

4. (15 minutes)

The PCV for the day discusses personal feelings about being the Trainer for the day. In addition, the groups provide feedback on the PCV's style in communicating and educating the group.

5. (15 minutes) Trainees put away tools, clean the work site, and organize the area.

Previous Page Blank

6. (1 hour)

The Trainees are introduced to the Lorena stove cooking session that follows. See Procedures #1, #2, and #3, *Session 20*.

SESSION 20
Food Preparation, and Operation of the Lorena Stove

Time: 4 hours 40 minutes - 5 hours 40 minutes

Interim Objective: Utilizing a Lorena stove, and any other available appropriate technology devices, the Trainee will demonstrate competence in preparing an example of a culturally and economically viable food, using ingredients typical of a country in which PCVs serve, and in accordance with the criteria of taste, aesthetics, retention of nutritional value, cultural acceptability and appropriateness. In addition, the Trainee will participate in a role-play where the operation of the stove is demonstrated by a PCV to a group of villagers.

Overview: Under the guidance of the Trainer, the Trainees plan, coordinate, and prepare a meal utilizing available small-scale technology, including a Lorena stove that the Trainees have built. Groups of Trainees work cooperatively on all aspects of the meal, and evaluate the relative success or failure of each step, from the planning to the eating. During the session, Trainees (as PCVs) demonstrate the procedure and operation of the stove to villagers, role-played by other Trainees.

Recommended Resources:

Lappe, Francis Moore, *Diet for a Small Planet*, Ballantine Books, 1975.

Robertson, Laurel, *Laurel's Kitchen*, Bantam Books, 1979.

Attachments II-20-Q and II-20-R

Materials Needed: Lorena stoves (ready for firing); pots, pans, and utensils for cooking; rags or pot holders; baking soda (in case of grease fire); kindling, firewood, matches; pens and paper; foods (Attachment II-20-Q)

Note: For this session, Trainees work in small groups; the division may be the same as that used during stove construction. It is recommended that in United States pre-service programs, Trainees be organized according to country or regional assignment during both construction and cooking experiences.

Procedure

(The first three procedures (1 hour) may take place during the previous meeting so that Trainees are ready to begin preparation at the beginning of this session.)

1. (20 minutes)

The Trainer reviews the objective and explains the process of the exercise, using a summary of all procedures, then distributes Attachment II-20-Q : Foods List, and reviews it with Trainees. The following guidelines should be explained at this time:

The planning, preparation and evaluation of the exercises should include active participation by all group members working cooperatively.

All tasks: food ordering, meal planning, preparation, and clean-up, should be fairly distributed among group members.

Only the devices indicated by the Trainer (grinders, etc.) may be used. even if other devices and appliances are at the site.

2. (30 minutes)

Trainees, in cooking groups, decide upon the foods they will use (Attachment II-20-Q), and place their order with the Trainer, making sure that the budget does not exceed the alloted 50 cents/person. They may wish to consult recipes or cookbooks to help in choosing a low-cost, culturally viable, nutritious food.

3. (10 minutes)

Trainees plan the strategy for the session, and decide upon tasks for each person. One person in each group should volunteer to be the PCV/facilitator for the day.

4. (2 hours 30 minutes) The participants assemble the necessary materials, light the fire and prepare the food.

5. (1 hour) When the meal is ready, each group of participants joins with another group to share the meal and cooking experiences. A representative of each group (the PCV) then explains to the members of the other group how the stove worked, the process involved and the way in which the food was prepared. "Villagers" are encouraged to ask questions and respond to the "PCV".

6. (30 minutes) In each group, the evaluation questions in Attachment II-20-R are answered jointly, and handed in to the Trainer.

7. (40 minutes)

Participants clean the site, wash and put away utensils (if solar-heated water is available, it should be used), and store unused food (in water-cooled refrigerator or other appropriate technology device).

SESSION 21
Stove Operation, Maintenance, Safety, and Repair / Stove Evaluation

Time: 4 hours

Overview: The session begins with a discussion of the Trainees' cooking experience in the last session, with a focus on stove operation, maintenance, and repair. The session concludes with the disassembly of the stoves, and reading time.

Procedure

1. (30 minutes)

The Trainer asks the Trainees to share with the group the positive and negative experiences of cooking with the stove (Trainees are encouraged to relate problems, mistakes, and humorous incidents). During this discussion, the Trainer ascertains that the group has an understanding of the stove as a new *process* of cooking, with particular emphasis on heat transfer (i.e. how dampers and chimney function to regulate air flow in the stove).

2. (20 minutes)

The Trainer facilitates a discussion concerning maintenance and safety, and examines potential problems of ash buildup and creosote deposits in the stove flues. It should be emphasized that chimneys need to be cleaned regularly. Then, the Trainer discusses crack analysis and repair (the stove will have developed cracks, providing the opportunity to demonstrate repair techniques). Questions, comments, and insights from the Trainees should be encouraged so that this procedure does not become a lecture. (For further details, see p. 60 in *Lorena Owner Built Stoves*.)

3. (40 minutes) Each Trainee receives Attachment II-21-S : Troubleshooting, and the group discusses the list point by point.

4. (50 minutes) The entire group takes a tour of all the stoves built, and members of each stove group explain the successes and failures they encountered in constructing their stove. During this time the strengths and weaknesses of each stove are evaluated by the Trainees and the Trainer.

5. (1 hour) Reading time is provided.

SESSION 22
The Lorena Stove: Information, Promotion, Resources, Evaluation, and Disassembly

Time: 2 hours 30 minutes

Overview: The final session of this Phase is designed to provide some closure to the overall experience. The Trainer gives additional stove information, facilitates a discussion on Lorena stove promotion and education, and then lists the resources available to PCVs once they are in the field. At the end of the session, Trainees disassemble all but two stoves, which are left for future sessions in Health/Nutrition.

Procedure

1. (30 minutes) The Trainer opens discussion by inviting questions from the Trainees concerning any aspect of stove construction, operation, maintenance, or repair. After questions are answered, the Trainer distributes Attachment II-22-T : Mud Stove Information, and reviews the points raised in the sections on "Stove Design" and "How to Conserve Firewood".

2. (30 minutes)

The Trainer reiterates the importance of stove extension work and understanding the role of the Volunteer in promoting stoves and instructing others. (Points to raise with the Trainees are listed on Attachment II-22-T .) In addition, Trainees are given a short talk on the following, relating to points that are crucial to the successful dissemination of mud stove technology:

Women need to be included in stove design, construction, and operation workshops since they have the primary responsibility for cooking and fuel use.

The process of cooking should receive as much emphasis as the construction process.

It is imperative that local participation be included in the stove development and testing process. Issues relating to design, construction, and use can better be identified and solved through involvement of the villagers themselves, particularly the women. Active local participation is an integral part of the general definition of appropriate technology, since its goals are to utilize and enhance the innovative capabilities of all people.

It is important to introduce stoves initially in one community or area rather than throughout a large region so that stove quality and direct technical assistance are ensured after the stoves are built.

Previous Page Blank

3. (10 minutes)

Information should be provided concerning where Trainees may obtain assistance once they are in the field. In addition to exploring local and regional resources, Trainees should know that the Peace Corps Energy Project (OPTC, Washington, D.C.) has a list of current Volunteers throughout the world working with mud stove technology. In addition, Aprovecho Institute, 359 Polk St., Eugene, Oregon 97402 and Estacion Experimental/ I CADA-CHOQUE, Apartado 159, Quezaltenango, Guatemala, may be contacted for direct technical inquiries.

4. (20 minutes)

Three newsprint sheets are posted, and Trainees are asked to list comments on each: positive, negative, suggestions for improvement, then circulate to read the lists. (The Trainer may leave during this time and then return to answer any questions.)

5. (1 hour) Trainees disassemble all but two stoves, which are left for future sessions in Health/Nutrition.

P H A S E II : ATTACHMENTS

II-2-A : Sanitation in Nepal
II-5-B : Criteria for the Selection of Technology
II-7-C : The Dilemma of Peasant Women
II-7-D : Sex Role Pattern Analysis Sheet
II-8-E : Extension Skills
II-8-F : Extension Evaluation Chart
II-13-H : Worksheet
II-15-I : Custom and Food - Pretest
II-15-J : Food Custom Questionnaire
II-16-K : Advantages of Lorena Stoves
II-16-L : Disadvantages of Lorena Stoves
II-18-M : Four Day Food Diary
II-18-N : Problems in Nutrition: Selected Case Studies
II-18-O : Plant Protein Complimentarity
II-18-P : The Food Square
II-20-Q : Food Costs List
II-20-R : Assessment/Evaluation of Cooking Exercise
II-21-S : Troubleshooting
II-22-T : Lorena Stove Information

Task Analysis : Build a Fuel-Conserving Mud Stove

Attachment II-2-A

SANITATION IN NEPAL

Broughton Coburn

Previous Page Blank

October 17, 1978

TABLE OF CONTENTS

		Page
I	Introduction	193
II	Traditional Sanitation	184
III	Improved Installations and Current Programs	189
IV	Sanitation Technologies for Nepal	194
V	Implementaion Channels and Strategies	198
VI	Conclusions	203
VII	Summary	206
VIII	Appendix	

I. INTRODUCTION

This paper will discuss many aspects of sanitation in Nepal, with special emphasis on the cultural, technological and institutional impediments to its widespread improvement. Institutional avenues for implementing appropriate sanitation technologies and their costs are explored.

Improved sanitation facilities are virtually non-existent in Nepal at present. The people are strong and, in general, sufficiently nourished, but gastro-intestinal ailments caused by pathogens spread by the poor-and deteriorating sanitation are having a visibly damaging effect on the health of the population. Infectious skin disease is common, infant mortality is high and the likelihood of epidemics is real, all exacerbated by Nepal's poor sanitation. The Government of Nepal's drinking water supply program for rural areas currently has no sanitation component, but attempts have been made to combine the two in the past. Sanitation improvement demands a change in habits and lifestyle with no tangible return, and will be especially slow and difficult since the subject is embarrasing for most. Development projects such as roads or hospitals are often felt to be an addition to, if not extraneous to, the lifestyle of most, and require little sacrifice on the villager's part. Apathy fostered by a lack of recognition of the causal link between sanitation and health, in all levels of Nepalese society, are the primary stumbling blocks to the development of a self-perpetuating sanitation program.

The failure (at least 50%) and inadequacy of the improved sanitary installations that have been built in Nepal to date (primarily in the Kathmandu Valley) has been due to four major downfalls:

1) inappropriate design and location, where the habits and desires of the local people have been given little consideration,

2) insufficient water supply,

3) erratic or non-existent maintenance, and

4) lack of community participation and commitment to its construction and operation.

In spite of the medieval picture of Nepal's sanitation, there are distinct possibilities for correcting each of those downfalls, and they are discussed in detail below.

II. TRADITIONAL SANITATION

The Terai and hills

Shortly before sunrise on any morning the bulk of the Terai and hills populace can be found squatting near creekbeds, field margins or trailsides performing an almost ritualized event: the daily elimination. The vast majority have their elimination before sunrise or shortly afterward. Few have shifted their pattern to the evening after dark, and elimination during the daytime is uncommon. The explanation for such a universal routine schedule is apparent: it is the most convenient time of day, there is more privacy, due to the darkness, and their eating habits consist of two large and identical meals consumed at the same times each day, allowing routine defecation habits to develope. Indeed, each villager's defecation patterns are interrupted only by sickness or a radical diet change. Some have confided to this author that they will go out to defecate in the morning regardless if they have the urge to. Just as a break in eating habits is considered to be a symptom of illness, a break in the daily elimination routine is likewise suspicious.

It is interesting that in some villages with distinct communal areas of defecation, the women will develope a pattern of defecating in the evening, while in the morning only the men will visit that area. Regardless of whether they defecate in the morning or the evening, in each neighborhood or village the women tend to synchronize. The opportunity for socializing, often not possible at other times, should not be overlooked as a reason for this. In some villages the defecation areas are segregated by sex. None of these observed patterns are arranged or verbalized in any way by the villagers - defecation is generally an embarrasing topic.

River banks and creekbeds are the most popular defecation sites, because water is the cleaning agent of preference. The usual custom is to squat within ten meters of the flowing water source, walk over and then actually stand in the water while cleaning with the left hand (eating is done only with

the right hand, and it is considered unpropitious to accept anything proffered by someone's left hand). It is not hard to imagine how gastro-intestinal pathogens are transmitted to the villagers downstream who depend on the same water source for drinking.

Where flowing water is not readily accessible, a villager will take a small rounded brass or aluminum pot (N. lota) or tin can holding no more than one litre, to a trail or field margin or unutilized area within the village. It is doubtful that effective cleaning of the left hand after wiping is achieved with one litre of water. The lota serves no other household purpose, except in some poorer houses where it may be rinsed and used for drinking. Soap is used only sporadically for hand washing upon return to the residence. Stones and corncobs are less frequently used for cleaning, though corncobs are the parent's agent of preference for small children. When children defecate on the verandah or activity area in front of the house, dogs (usually unowned scavengers) and chickens are called to consume the mess. Dogs consume significant, but unknown amounts of fresh feces. Sometimes they are also allowed to lick the villager's meal plates after eating and subsequent utensil washing is of questionable sterilizing value. Chickens are perhaps the greater agents of disease transmission, as they frequently commute between the defecation areas and the residence, and contaminate the food of small children eating from bowls on the floor. Chickens are cooped only at night.

The effect of poor sanitation of health

Only the most sheltered short-term visitor can hope to avoid the ubiquitous gastro-intestinal pathogens. Among Nepalese, the fecal-borne pathogens most commonly responsible for illness and loss of working productivity are amoeba (Entameoba histolytica), roundworm (Ascaris lumbricoides) giardiasis, salmonella spp. and other parasites such as hookworm and pinworm. A pathogenic variety of E. coli has been implicated in some cases of gastro-intestinal distress.

The concept of microscopic pathogens carried long distances in apparently clean water and affecting human health, is not well understood by most Nepalese. Water purity is gauged by its clarity, and occasionally by superstition or traditional belief concerning its reported properties. For example,

the hex that certain evil spirits have purportedly cast upon some water sources is often the explanation for clear, but contaminated water. Some citizens of a village in Syangja District in Central Nepal believe that a pregnant woman will risk having twins or triplets if she drinks from a certain nearby spring. In spite of the fact that many educated people notice flies breeding in fetid places and also landing on food, they make no connection between this and gastro-intestinal distress.

Impediments to change

Understandably, Nepalese regard feces with extreme revulsion, but this is almost ironic in light of their casual treatment of it, its prevalence on the waysides, and the religious respect and usefulness that they attribute to cattle manure. Defecating in agricultural fields, regardless of whether they are cultivated or fallow, is a transgression worthy of reprimand to the offender. Most Nepalese firmly retain the notion that it is improper and unsanitary to defecate in the same place every day. They say that this is the habit solely of the weasel, considered to be a particularly unhygienic animal. People who do build latrines and use them (foreigners and the educated, for instance) are often ridiculed and compared to this animal. But their aversion to defecate in a common place is further based on common sense and their experience with "latrines", usually naturally-occuring open, low places below a flat rock, which are occasionally used by villagers: dogs will not visit these areas, so some may feel that the dogs might go 'undernourished' while the waste subsequently goes uncollected; An offensive smell issues from these pits, a problem, by comparison, of only the most heavily-visited waste areas, and fly breeding in these common pits is also more noticeable than in the 'defecation areas'.

The greatest single reason that villagers are averse to using pit latrines other than that of "tradition" or "habit", is that most Nepalese would like to see the nature of the produced stool, and they look specifically for worms (primarily Ascaris). This is not possible with most pit latrine designs, and is the greatest cause of ultimate abandon of latrines: villagers go out to use the latrine, and then deposit the stool on the side of the hole or on the footpad. Out of revulsion the next visiter stands a foot or two further

away, and so on until a trail of excrement leads away from the latrine.

Their reaction to the idea of reusing human waste as fertilizer is also one of revulsion, regardless of its state of decomposition. Educated villagers realize, however, that this belief is unwarranted and that people of other countries reuse their night soil.

Not surprisingly, one of the stronger impressions of Nepal that is left with trekkers and tourists is that of the atrocious sanitation and the total dearth of facilities. In Kathmandu, it is bothersome to observe where one is stepping every moment, and it is a source of inconvenience for tourists to return to their hotels by taxi to use the facilities. Trekkers have further difficulties in the mountains. The relatively dense population of rural areas allows the trekker little privacy even after he has hiked for several minutes away from a village or neighborhood. Stories of trekkers being chased out of villagers' fields are not uncommon. The litter of toilet paper localized along some popular trek routes is further displeasing to all. Of greater importance, Nepal's poor sanitation has earned it the distinction of being, health-wise, one of the most hazardous countries for tourists in the world.

The Newars of the Kathmandu Valley, the Sherpas of Solu-Khumbu, the Gurungs of Manang, some of the hill tribespeople and many of the educated populace of Nepal have little innate aversion to the use of latrines, but these groups comprise only ten percent of the population. They can be considered exceptions to the norm of the hills and Terai, and are covered separately here.

The Newars of the Kathmandu Valley

The Newars (over 250,000 population in the Kathmandu Valley) reside predominately in dense, urban-like towns and villages. The sanitation of these settlements is as medieval as the architecture and lifestyle (see photo 1). Raw sewage flows down open troughs in every path and alley, where it mixes with slaughter waste and solid garbage thrown from upper windows. Children to the age of four or five simply squat on the path or over the sewer trough, while adults use open areas or back alleyways, inevitably throughways for others. They figure that if they as individuals were to take responsibility for their own waste, their neighbors would befoul the environment anyway.

Besides, the Newars are divided into clans and sub-clans (similar to the Hindu caste system) with a street-sweeping and septic-tank-cleaning clan of untouchables (Pode) whose inherited occupation is the removal of wastes. Some of the Pode are employed on contract by the wealthy, usually high-level government officials, to clean their septic tanks (which are seldom built correctly) or empty their septic vaults. Septic vaults are common in central Kathmandu city, and are being included more often in urban new-building construction, and among a less wealthy sector. The Pode men who clean the vaults have been known to virtually submerge themselves in their medium, for a wage not exceeding Rs. 15/- NC (US $1.20) per day. Many of the Podes, primarily the women, are employed by the Gaõũ Panchayats or Nagar Panchayats (village or town councils) to clean the main streets and pathways, and are paid Rs. 6/- ($0.50) per 6-hour day. Their yokes and hanging baskets (N. karpaona) into which waste is scooped with the rib bones of a water buffalo, are a common site in Newar bazaar towns.

The street and septic wastes collected by the Pode are carried to common "town compost" depots at the edge of town (see photo 4). Here they are piled into heaps growing no larger than $1m^3$. They are removed once annually, again on a contract basis, to the fields of the farming clan of Newars (Jhyapu). Some aerobic fermentation does take place within these compost piles, as steam can be seen rising from them on cold winter mornings. They are not scientifically managed, however.

The Jhyapus have no aversion to using this town compost waste on their rice paddy and wheat and millet fields, and some farmers have the Podes apply the liquid septic vault wastes directly. They have no taboos concerning defecation on fallow agricultural land, probably because there are few other marginal lands suitable for that purpose. Also, they are not reluctant to use latrines, but the majority have not constructed them for the following reasons:

1) They can't afford to sacrifice the land necessary to build a latrine,
2) if they did build an outdoor latrine, someone else would foul it or otherwise misuse it, and
3) indoor bottom-floor water-seal vault latrines are too expensive.

The Sherpas of Solu-Khumbu and the Gurungs of Manang

The Sherpas, in the Mount Sagarmatha (Everest) area particularly, have for many years constructed unscientific but effective aerobic-compost latrines. The wood floor of the latrine is built ½ to 2 meters off the ground, or occasionally attached as an outdoor 'bathroom' to a second-story doorway. The waste drops to ground level and piles up until it is removed and spread on the fields before Spring plowing. The sides of the latrine between the ground and the floor level are often contained by wooden or bamboo slats (often spaced, occasionally tight-fitting) on at least three sides. Dried leaves and pine needles are heaped in a corner of the latrine floor for cleaning after defecation, and are mixed with the latrine waste to make it a "better fertilizer". A significant proportion of the dried weight of this latrine compost fertilizer consists of leaves and needles. Fly-breeding is controlled in the darker latrines, but not completely. In spite of their recognition of the value of this waste product, not all of the Sherpas from this area use latrines. The cost for one latrine unit, were the materials and labor to be purchased, is similar to that for the pit latrine.

The Gurungs of Manang District also build, though less frequently than their ethnic relatives, the Sherpas, crude aerobic compost latrines of similar design. They have further developed stone outhouses with biscuit-tin roofs and hinged wooden doors, perched over the cliffs that border many of the villages. The waste is not collected from these outhouses, but disposal is effectively achieved. Labor and materials for their construction are usually donated as a part of community work projects (shramdaan), organized by the elected village leaders.

III. IMPROVED INSTALLATIONS AND CURRENT PROGRAMS

Unfortunately, few public sanitation facilities built with developmental aid or by local development groups have been successful. The chief cause of this is summarized by the downfalls listed in the introduction, further combined with caste prohibitions and inhibitions to change. The ultimate blame for these faults would seem to lie simply with a lack of community comittment

and participation, but this is not universally so, and the attachment of blame is often complex. Many communities have the consensus and commitment to improve their sanitation, but are poorly organized to manage the implementation of a project such as a community latrine. Who will supply the capital, who will use the latrines, who will maintain them, where will they be built, etc., are all questions that seldom come up in a traditional village context (but when they do, often end in chronic feuding) - questions that these communities must primarily address. From the experience so far gained with installed sanitation systems, it appears that the lack of permanent accomodation for recurrent cost financing has been the biggest hindrance to their long-term success, even when it is but a fraction of the capital cost. To bypass this and other organizational problems it is necessary to shorten the communication gap between central governing bodies (Zone and District Development Offices and village/town Panchayats) and the individual wards and citizens. "Getting lost in the shuffle" is a common fate for small decentralized projects, and it could similarly afflict rural sanitation programming.

Examples are briefly given below of some improved sanitation installations in Nepal, with suggestions of how some of their problems could have been diverted.

Ratna Park latrines:

(Kathmandu, NE and SW corners of the Tundikhel). Nepal's pilot community latrines, built and maintained by the Kathmandu Nagar Panchayat, they are cement trough-style septic tank (and drainage field?) systems. Water is sporadic and insufficient, but the units are tolerably maintained by the streetsweepers, probably because of public outcry (letters in The Rising Nepal, etc.) over their tendency to deteriorate, and the pervasive smell of urine within a 20-meter radius of the units. Each complex is used by over 800 persons/day, and probably the same number urinate in the immediate vicinity regardless of the uncrowded conditions within the latrines.

Vishnumati River latrines:

(Across from Bhimsenthan, Kathmandu). These are two simple cement outhouses about 30 meters from the river, fouled and unused. They are of

inadequate design and have insufficient water supply, no maintenance, etc.

Bhaktapur Central Sewage System:

(Bhaktapur District, Bagmati Zone.) Part of the Bhaktapur development and temple restoration project sponsored by the Government of Germany. Over 60 public latrines of brick and cement have been built in one sector of the city, and over 100 private-home (indoor, bottom-floor) latrines have been installed for a token fee ($8.00). The improvement is remarkable: The casual impression is that an unbearable place has been transformed into an enchanting village of cleanliness seen only in Europe. The latrines are popular, but the water taps (1 for every 2-6 latrines) supply water inconsistently, since they are connected directly to the central water system, which is frequently shut off. The latrine wastes fall directly into flowing water, travel underground and empty into an oxidation pond at the end of town. No plan was made for reuse of the treated waste.

Women's Community Latrine Bio-gas System:

(Tyaagal Tole, Ward #7, Patan, Lalitpur Nagar Panchayat.) Funded through U.S.A.I.D. and Peace Corps and the Division of Soil Science and Agricultural Chemistry of the Agriculture Department of the Government of Nepal. An 18-hole women's latrine complex (see photos 5-8) was completed early in 1976, and now handles 4-800 women/day. It is crowded (waiting lines) from 3:30am to 7:00 am. Water supplied to the complex is sufficient but not plentiful. Wash water alone used in the latrines is not adequate to affect proper flow of wastes - the janitor must flush the wastes with excess water, twice per day.

This community latrine and the Bhaktapur latrine system are among the most successful community sanitation schemes in the country, but their destiny is uncertain after the foreign funding sources are terminated. #7 ward of Patan has established a very informal "latrine committee", but have been thwarted in all attempts to procure funding for maintenance (ca. $25/month) from the Lalitpur Nagar Panchayat. Further, the wards are not authorized to levy local taxes even for local projects.

There were no local donations of materials or labor for its construction, but the residents were directly involved in the site selection and design, and were paid to operate the system until September, 1978 when the AID funding was frozen.

Imported costs (from India):	US $	500.00
Local costs:		3100.00
Total cost:	$	3600.00
Per latrine cost:		200.00
Per beneficiary cost:		4.50
Recurrent costs: annual maintenance (24-hour janitor) and minimal materials:		300.00
Annual recurrent cost/beneficiary:		0.40
Approximate 5-year total average annual adjusted cost per beneficiary (10% interest):	$	1.57

Lalitpur Community Latrines:

Sponsored by the Lalitpur City Development Program (Lalitpur Nagar Bikaas Yojaana). 56 latrines were built at 12 locations throughout the town of Patan. Severely overdesigned by city engineers, with mistakes too numerous to mention here, virtually all of them were befouled and inoperable within two weeks of their dedication. No funding arrangement was made for their maintenace, and water supply was erratic. No local labor or materials were donated, and local residents were not consulted on their design and operation. Its current state of deterioration and filth continues to reaffirm local residents' beliefs that improved latrine systems never work.

Imported costs: (approx.)	US $	2000.00
Local costs: (approx.)		23210.00
Total cost:	$	25210.00
Per beneficiary cost:	$	12.00

Rasuwa-Nuwakot Integrated Development Project Latrines:

(Headquarters: Kathmandu and Trisuli) A number of latrines were installed in rural areas as part of this World Bank-funded program. Visitors to the installations have said that they have gone unused.

UNICEF:

(Lazzimpat, Kathmandu) UNICEF, in coordination with the National Development Service (see below) has not built latrines as part of their health projects, but they have printed a small booklet (10,000 copies?) in simple Nepali illustrating the need for improved sanitation, and the techniques for building simple pit latrines. Printing costs were approximately $0.25/booklet, and they were distributed to all the schools and health posts of the kingdom. They may have been of help to teachers who were concerned about school sanitation, but did not know how to build a latrine.

Village latrines:

The simple improved village pit latrine, dug occasionally by villages who have had some education, is perhaps the most inspiring example of an appropriate technology that has developed entirely through local self-motivation. Additionally, these innovators have had a great impact on their neighbors in the village. There are some Brahmin-Chhetri villages in the Pokhara area, for instance, where a significant proportion of the homes have pit latrines. Among the Gurungs and Magars in the outlying areas of West Nepal, pit latrines are sometimes dug by returning British and Indian Gurkha Armed Forces pensioners. They are by and large simple pits no more than two meters in depth, covered with open-framework bamboo or wood planking, and surrounded above with cut brush or bamboo screening. There is usually no expense invested in their construction since all materials are available locally on the homestead. The wastes are not reused. The only significant technical fault with their design is the open-framework squatting platform which does not entirely preclude fly-breeding. The reason for this is the omen's logical anticipation that if the latrine platform were to be plastered over smooth except for a central hole, someone would eventually befoul it.

With this design, if the pit is dug deeply enough, however, fly-breeding should be reduced. The replication of similar pit latrines throughout rural Nepal, initiated by local development and educational bodies/projects in conjunction with innovative local citizens will have the greatest chance (regardless of the proposed investment) of improving the country's hygiene and health.

IV. SANITATION TECHNOLOGIES FOR NEPAL

Prerequisites for Successful Latrine Operation

The need for water:

With pit latrines, it is not necessary to supply water to each latrine, but it is more important that water be available closer to the house than the nearest natural flowing source. Some men use water carried from the river or spring to perform their daily ablutions (since it is carried almost exclusively by women), while many find it easier to go to the river themselves. A water tap can short-circuit this pattern - it is a direct incentive for villagers to use a latrine in the vicinity of the tap or their home. In some areas stones or other material are used for cleaning in preference to water, and in these areas latrines may see more use, since supposedly the patron would not be dependant on a nearby source of water.

All of the water-seal latrine systems such as aqua privies, septic tanks and septic vaults require a round-the-clock water supply - when it stops its takes but a short time for the squat-pans to become clogged and the vicinity befouled. A water tank large enough to accomodate periods of reduced water flow and heavy peak-period demand is essential. Peak demand can reach 15-30 times the average demand, thus the importance of designing the water system to handle it cannot be overstated.

Maintenance:

Minimal with homestead pit latrines, and doesn't require an untouchable-caste labourer. Water-seal systems need janitors who make frequent visits to:

1) Clean messes and unclog latrines before they get out of control,
2) demonstrate correct use and reprimand misuse,
3) keep women from using the water for clothes-washing and household purposes,
4) keep vandals away, and
5) repair or replace broken parts such as water taps and light bulbs.

Education:

The purpose of constructing and using sanitary facilities must be communicated before they will be used, and before improved sanitation can be realized. Men must be shown that if the women have intolerable sanitation, the health of the men will be affected as well. Some of the institutional channels for such education are discussed below.

Design and Location:

The primary design consideration for village pit latrines is that they can be fashioned from locally available materials that do not have high-priority alternative uses. Simple pit latrines as described above are ideal in this respect. The use of materials not available within the village, especially imported components, normally act as disincentives for the construction of latrines, even when these materials are donated. Most villagers consider it illogical to use cement, for example, in the construction of a latrine, and will actively attempt to divert this coveted and relatively scarce commodity for other uses. The degree of improvement that cement and other imported components can bring to pit latrine design should be more thoroughly investigated. Comparison should be made between pit latrines with sealed floors and those with open-framework floors with regard to their cleanliness and effectiveness in reducing fly breeding. For many areas, the trade-off may favor the open-framework floor. The feasibility of including simple door for latrine holes should also be tested. Community latrines face the combined problems of general disregard and abuse of communal property, and the responsibility for maintenance. Bamboo screens shielding community latrines are soon removed by villagers who think that they "belong to nobody".

Lastly, the location of village pit latrines plays an important role in their success. Some private homestead latrines have gone unused after being located at a distance from the house that people feel is inconvenient. If the completed latrines are not specifically segregated by sex, the women of the community may forego using them at all.

Latrine Technologies

Pit latrines:

Materials and labor for pit latrines are estimated as follows, though these are not considered costs by the typical villager:

Labor (3 man-days):	Rs. 45/-	
Materials (bamboo pole and screening):	40/-	
Total (± 20%):	Rs. 85/-	($7)

Water-seal latrines:

These have specific design features that are peculiar to Nepal. Noteworthy among these are:

The pan. These are cast in cement and finished with a smooth surface in Kathmandu and some Terai towns; the technology is adaptable wherever cement is used. The ring of the pan, 3 cm. below the footpads, is usually flat; this can be special-ordered (at no extra charge) to slope inward so that urine and other waste matter does not collect there. The forward portion of the bowl of many of these pans is also virtually flat, and night soil can easily collect there if large quantities of water are not used for cleaning and flushing. The advantage of this flat 'shelf' should not be overlooked, however: it allows the latrine patron to view his stool. The technical problem of possibly allowing this without leading to clogging and pile-up problems is significant, and worthy of further investigation. A flushing mechanism for each latrine is one answer to this. The effluent hole of many pan designs is too small (5-7 cm.) and has led to clogging.

All floor surfaces within the latrine should be plastered smooth and slope toward the pan. Red oxide can be mixed with a rich mixture of cement plaster

for the floor, to provide a smooth, non-porous surface. It is important that stones not be used in water-seal systems - they cause clogging and can quickly fill the septic container. A consistent water supply will discourage this. Excess sand (brought in on the feet of patrons) can also fill the tank slowly. To help mitigate this the entranceway to a latrine complex should be of brick or cement and kept clean. Water taps should be of the most durable self-closing type, installed with one-way screws.

The typical cost for a 4-hole aqua-privy or septic vault system is estimated below:

Labor (coolies: Rs. 8/-per day, skilled laborers: Rs. 15/-per day, Overseer: Rs. 25/-per day):	Rs. 500/-	
Materials:	3500/-	
Total: (±20%)	4000/-	($336)

Imported costs are unnecessary unless steel reinforcement is desired (if latrines are to be on a slab directly over the vault) and tin is substituted for tile roofing.

Gobar gas latrines:

Latrines connected to gobar gas (bio-gas) plants have not proven popular in India, in spite of a 50% subsity offer from the Khadi and Village Industries Commission. There are two gobar gas plant/community latrine systems in Nepal, each connected to four latrines. They were built in Tibetan refugee communities, and for this reason have been successful since Tibetans are not averse to the concept of a latrine. The idea of cooking one's food on any kind of human waste byproduct is met by most Nepalese with disgust, but there are a growing few with working bio-gas plants who are curious that it might be a wise use of resources and perhaps not so unappealing. The quality of the gas does not change with the attachment of a latrine. Only one of the 5-6 gobar gas latrines visited by this author in India was used by its owners. The cost of adding a latrine and influent pipe to a gobar gas plant under construction is about Rs. 800/ - ($67.00). Retrofitting would be difficult, if

possible at all.

In the women's community latrine bio-gas digestor in Patan, the carbon: nitrogen ratio is too high for optimum gas production, the CO_2 content is slightly too high (ca. 45%) for continuous gas combustion, and there is a difficult scum problem in the digestor. Retention time is approximately 80 days in the digestor (at 18-22°C) and longer in the two 'drying' pits. The scum which forms on the drying pits is occasionally removed with a rake and composted with other dried organic matter, such as leaves, and removed to the fields once a year. Some of the liquid portion of the effluent does escape to the original rivulet into which raw wastes formerly flowed, but only after an apparent BOD reduction (gauged by a noticed decrease in fly breeding and odor) It is not recommended that night soil be used as the sole substrate for bio-gas digestion. Further, direct-feed systems may develope scum problems impeding their proper operation, unless sufficient pre-digestion mixing can be achieved.

Compost Privies:

The composting privy (see the VITA Sanitation booklet in the forthcoming AT series) is an intelligent adaptation of the pit latrine, requiring only a slightly greater minimum depth. If covered properly after filling, it should yield a fertilizer that is not only safe, but more importantly in terms of its appeal to villagers for reuse, unrecognizable as night soil.

Generally, the success of a latrine or sanitary system will be in direct proportion to the amount of community participation in its design, construction and operation. The women's community latrine complex (in Patan) and the Bhaktapur central sewage system, which have had only peripheral community participation, are the exceptions. It is noteworthy that these improved installations were constructed directly in the traditional community defecation areas, giving the residents no choice but to use them.

V. IMPLEMENTATION CHANNELS AND STRATEGIES

The following Government offices and other institutions are among those

currently most suitable for absorbing a nationwide sanitation improvement scheme. Training and information dissemination are strongly emphasized - most rural villagers have the wherewithal to dig simple pit latrines, specifically, but require education, motivation and technical guidance.

NDS/UNICEF/Health Ministry

The National Development Service (Rastriya Bikaas Sewa, Tribhuvan University) is the mandantory one year of service at a rural post (usually a secondary school) that all Tribhuvan University students must complete before graduation. They are encouraged to initiate and engage in local development activities. Several have built latrines at their posts, and for this have received guidance and material assistance from UNICEF. Mr. Andrew Quarmby is the sanitation advisor to UNICEF, and has worked advising students in sanitation and printing literature specifically for NDS students. A brief hands-on sanitation component in the NDS students' pre-posting training would be a logical approach to transfer the skills needed to build rural latrines. Many of the NDS students have teaching duties in their school posts, and they could easily include latrine-building objectives and techniques in their curriculum. Funds could be made available to them to assist the school, and possibly individual students, in the construction of latrines.

UNICEF also works closely with the Health Ministry (Mr. Stewart McNab is the UNICEF Nutrition Officer) and they have acknowledged the integral part that sanitation plays in health and rural water supply - the two areas that UNICEF has most heavily invested in. However, other than distribution of their pit latrine booklet, specific address of rural sanitation issues by the Health Ministry and UNICEF has been minimal. Working with Health Ministry personnel for the establishment of improved sanitation at the forefront of health care and health education is a high priority. The inclusion of sanitary engineering in the training of paramedical personnel assigned to rural health posts could be an offshoot of this. Their family planning, soil conservation and 'mother's milk' radio advertisements and documentary films (daakment) shown in rural villages, have had a very popular response.

Agriculture Extension

The Department of Agriculture's (Director: Mr. S. Nepali) extension programs are known to many farmers and are helpful to some through subsidy of the more innovative (risky) project activities. One of the more appropriate extension activities that the "JTs" (junior technicians) and "JTAs" (their assistants) could adopt would be the demonstration and encouragement of composting privies for fertilizer production. Unlike the more capital-intensive and risky agriculture projects that the extension agents commonly encourage, a compost privy program should be more attractive to the risk-aversive farmer. The innovative farmers of each district are the ones most likely to be interested, and it is precisely with them that the JTs have developed strong working relationships. The only disincentive is the unlikelihood of the farmer realizing a marked short-term increase in agricultural productivity; but such a program would no doubt be an intelligent and economical use of resources in the long term.

School System

(Ministry: Kaiser Mahal, Kathmandu) The education system has also had a pervasive influence on all rural regions of the country; almost every household has a child who is, or has studied in school at one time. The majority of all primary and secondary schools in the country, however, do not have any latrine facilities, and those that do seldom operate. Several school days per year are devoted to school-area work projects such as grounds beautification, pathway maintenance, garden planting and building construction. For this, students bring materials and tools from home and work is enforced in lieu of classwork or sports attendance. It would take but few of these project sessions to build school latrines. In the schools that do have facilities it seems, ironically, that the latrine patronage by students is greater than that by teachers.

The natural science curriculum taught in the school system would be the logical place to introduce these concepts to the young, but it is a rare teacher who has the ability to effectively communicate such abstract cause-and-effect relationships to a student body that is poorly prepared, easily

distracted and culture-bound. But the education and participation of young students in sanitary techniques will be a major key to its improvement in the years to come; sanitation should have been included in the curriculum long ago. The eventual breakdown of caste prohibitions regarding the handling of night soil would be one beneficial, but extremely slow-to-realize outcome of this.

Gurkha Training Programs

The British Gurkha Resettlement Program (head offices: Lazzimpat, Kathmandu, Director (?); Colonel Lys.) sponsors training programs for returned pensioners covering improved agriculture, animal husbandry, etc. Some of these training sessions are at the Paklihawa pension camp in the central Terai, and at another camp in the Eastern hills. The Agriculture Development Farm at Lumle, near Pokhara, also trains pensioners from that area. Their program structure and outreach methodology is ideally suited for the training of low-risk sanitation technologies and concepts, and the trainees are generally innovative and educated, due to their background in the service. Being army pensioners, they are also well-respected citizens of their communities. The pensioner resettlement fund also sponsors small individual village projects, such as drinking water systems.

Volunteer Programs

In the Fall of 1978 the US Peace Corps/Nepal will initiate an innovative auxiliary "appropriate technology" component for volunteers being trained for positions in all fields. Sanitation concepts and the aspects of digging latrines will form a major part of this component, and all volunteers will be encouraged to build latrines at their village posts. Volunteers who have installed them in the field to date have had mixed, but steadily improving success in getting other villagers to consistently use them. Similar programs for other volunteer agencies are recommended. Working as full-time "sanitation extension agents", advising on latrine construction and organizing community educational programs and training sessions, would be a frustrating but potentially rewarding job for volunteers.

Tourism Department

The Department of Tourism has had growing complaints of the poor sanitation that pervades touristed areas. The development of urban latrines that are acceptable to foreigners and yet tamper- and foul-proof would be of keen interest to them. The digging of one labeled latrine per village along trek routes, for example, would preclude the inconvenience and embarrasing situations that trekkers now face. It is likely that a program of sanitation improvement in touristed areas would recover its cost through increased tourism income alone.

Panchayats/Back-to-the-Village Campaign

The successful implementation of all of the programs proposed above may depend largely upon the encouragement and cooperation of the Panchayats. This may be slow to evolve because of the often intangible results and political inutility of improved sanitation. However, cooperation of the Panchayats with the central government and development programs has been good after repeated exposure to new concepts. Family planning, for instance, is now a household word. Roads, football fields, bridges and water systems are routinely built by centrally-organized, Panchayat-level implemented, and villager-executed programs. Community latrines are also suitable to this shramdaan communal labor activity. The risk of failure for a system built in this manner is normally fairly high for much of Nepal, but an intelligent assessment of the local committment to participate in latrine construction, operation and maintenance in the more innovative villages may determine which ones are distinctly low-risk. In city areas, a prohibition against urination in public places should be enforced.

The District Panchayats often have funds earmarked for community development purposes, but the kinds of projects undertaken typically meet the needs or desires of only a localized few. Unfortunately, latrines are not politically useful to the influential local politician, so their construction is seldom promoted in the decision-making process. Some of these decision makers are unaware of the extent of the degradation of their local sanitation, and this should be exhibited to them. As education and the concern for

health inspires citizens to press for better sanitation, the District Panchayat development programs will perhaps be further disposed to latrine investment.

The Back-to-the-Village Compaign (Gaõũ Pharka) was conceived ostensibly to assist the more rural areas in the management of their political affairs and to take development out to the grass-roots village level where it belongs. With strong central directives, they are in a position to help educate, encourage and offer guidance in improved sanitation. Each district office in turn has close ties with the Village Panchayat members in the district.

LDD

The Local Development Department (Sthaniya Bikaas Bibhaag; Pulchowk, Lalitpur. Director: Mr. Shanta Bahadur Rai) is responsible for small-scale rural development projects such as schools, hospitals, footbridges and drinking water systems. Chiefly, they supply materials (much of it is donated by UNICEF through the desk of Mr. Gordon Temple) and engineers to rural project sites. Pipe and plumbing fixtures for a sanitary installation would normally be handled by the LDD. They are now set up to examine requests for materials and technical guidance to build latrine systems from village Panchayats. But few requests have been made, and there are few if any engineers with experience in sanitation systems. With the training of engineers and the solicitation of the numerous potential requests for assistance (now looking for a door to knock on), sanitation can take a place alongside 'bridges' and 'water supply' in the LDD. They have a rigorous policy of ascertaining the full extent of the community participation in a proposed project, since the LDD never supplies labor.

VI. CONCLUSIONS

The health of Nepal's growing population and its status as a tourist paradise is in jeopardy unless the atrocious sanitation that plagues the kingdom can be abolished. But not only the physical health and beauty of the country is at stake. The side-effects of the current unsanitary conditions are subtly undermining Nepal's ecology, culture, economy and capacity for development.

Ultimate improvement of the standard of living in all facets of life for the Nepalese has, and will come chiefly through community commitment and involvement. And ultimately, community participation is the best mechanism for assuming the task of sanitation improvement. A system that requires even a minimal daily commitment (its use and maintenance) will function only if the inspiration and motivation have come from the patrons themselves.

The simple pit latrine, perhaps with some minor modifications, is the most appropriate waste disposal technology for rural Nepal. The minimal investment of time and materials required most closely matches the benefits yielded, and most villagers view these as insubstantial. Pit latrines are inappropriate for urban areas and large Newar bazaar towns. Here, if water and ongoing maintenance accomodations are plentifully supplied, an intelligently-planned sanitation system will meet with success.

Incentives in the form of subsidy, donated materials or technical guidance may well encourage villagers to dig latrines, but they will not cause the villagers to use them. Nepal's rural villagers are as rational and innovative as their brethren from the developed countries; sanitation concepts have merely been missing from their traditional, and now, their present Western education. A full understanding of sanitation should be sufficient to convince most of the need for proper waste disposal.

It is unlikely that any single department of the Government of Nepal has the capability to manage a nation-wide decentralized sanitation improvement scheme. Thus, it is essential that development efforts be applied to all departments of the Government and segments of society, with special emphasis on those listed in the preceding section. Simultaneous with the promotion of sanitation, it is important that field testing and data collection on the technology and sociology of rural sanitation begin, so that the numerous problems encountered heretofore can be prevented.

Fundamentally, it is essential that there be recognition in high Government offices of the need for adequate sanitation, not only for the health of the populace but for the economical, and consequently political stability of the country. Many of those now working in Government were raised in an age when sanitation facilities as such were virtually unknown, even while they were studying advanced Western sciences and abstract concepts. This basic

naiveté may severely hinder the rapid development in all sectors of Nepalese economy and society that is proposed for the years to come.

* * *

VII. SUMMARY

Nepal has virtually no tradition of sanitation or waste management, and there are only token sanitary facilities at present. Gastro-intestinal disease spread by ubiquitous fecal-borne pathogens eclipses malnutrition as the primary source of ill health and loss of productivity. Ignorance of the interconnection between poor sanitation and health is universal, while taboos and caste prohibitions regarding the management of night soil are prevalent. The aversion to defecating in the same place every day is compounded by villagers' need to see their stool--significant hindrances to the promotion of latrines.

The population and the production of human waste is growing, and this waste has begun to markedly degrade the quality of local environments and severely contaminate streams that are downriver sources of drinking water. Nepal's dearth of the crudest sanitation measures has rendered it a disenchanting health hazard for tourists, the principal source of foreign exchange.

Concern is growing among progressive-minded citizens, but the social, political and technical mechanisms necessary to begin improvement of the present conditions are inadequate and poorly coordinated. The motivation of community interest, cooperation and participation will be a limiting factor in the success of a latrine system, and the most difficult to undertake.

Valuable experience has been gained from improved latrines installed to date: most have suffered from overdesign and recurrent cost recovery problems, factors that should be considered in future installations. Water-seal systems, suitable only for urban areas at this time, are heavily dependant on consistent water supply and maintenance for their operation. Pit latrines are the technology of choice for the bulk of rural Nepal. They are inexpensive, simple and easy to maintain; some educated and hill peoples have constructed and used them.

The education of Nepal's young in the concepts and techniques of sanitation, in conjunction with scattered functional/demonstration latrines built by innovative villagers will be one of the most expediant ways to begin the nationwide reversal of poor sanitary habits. Specifically, at this time some of the institutional channels which are best adapted for assuming a sanitation improvement program are:

- The NDS, a Tribhuvan University program in which undergraduates undergo a mandantory year of field service and are urged to initiate local development projects.
- The education system, which could encourage the construction of latrines and include sanitation as part of its curriculum.
- The British Gurkha Resettlement Program, which trains innovative returning soldiers in improved agricultural techniques, could teach the principles of sanitation in demonstration workshops or as part of other training programs.
- Auxiliary sanitation training could be given to all foreign volunteers sent to work in the field.
- Compost privies could be encouraged through the pervasive and relatively successful agriculture extension programs.
- The Local Development Department could handle requests for materials and technical guidance from village Panchayats and local development bodies.
- The Department of Tourism could sponsor the construction of latrines in areas heavily visited by tourists and trekkers.

The success of all of these programs will further depend on concerted central government directives. For Nepal, sanitation is not an investment that villagers imagine to yield benefits, so the importance of thorough education and rational, directed incentives will be essential. The task is a difficult one, and necessarily long-term, but is of the utmost urgency.

Photo 1: Temple steps sanitation

Waste deposited on the skirt surrounding a temple in Patan.

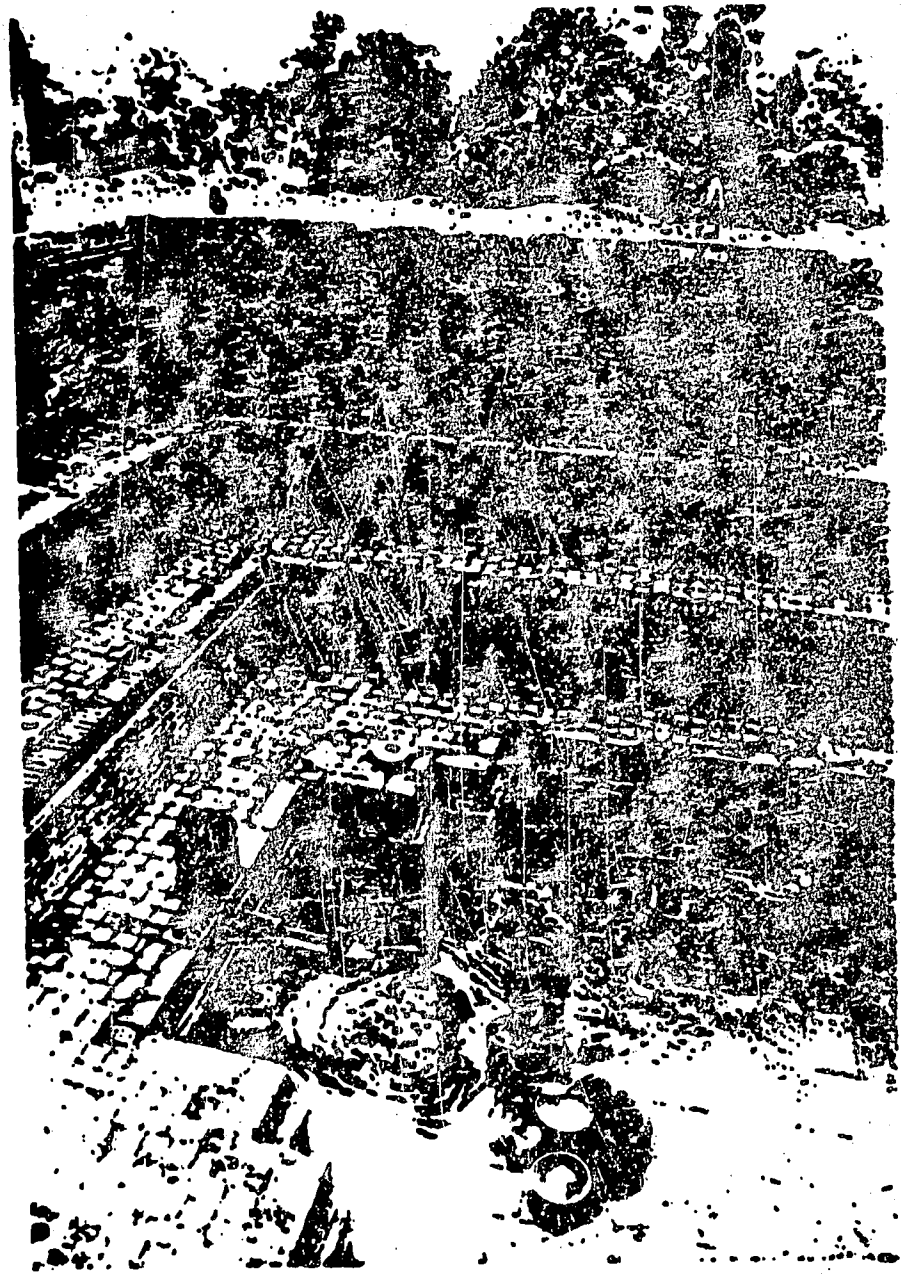

Photo 2: Community Washing area and water tap, Patan

Drinking water is retrieved from this tap when the supply from the Kathmandu-Patan city water main is cut off. The area in the background is a community defecation area for men (see next photo).

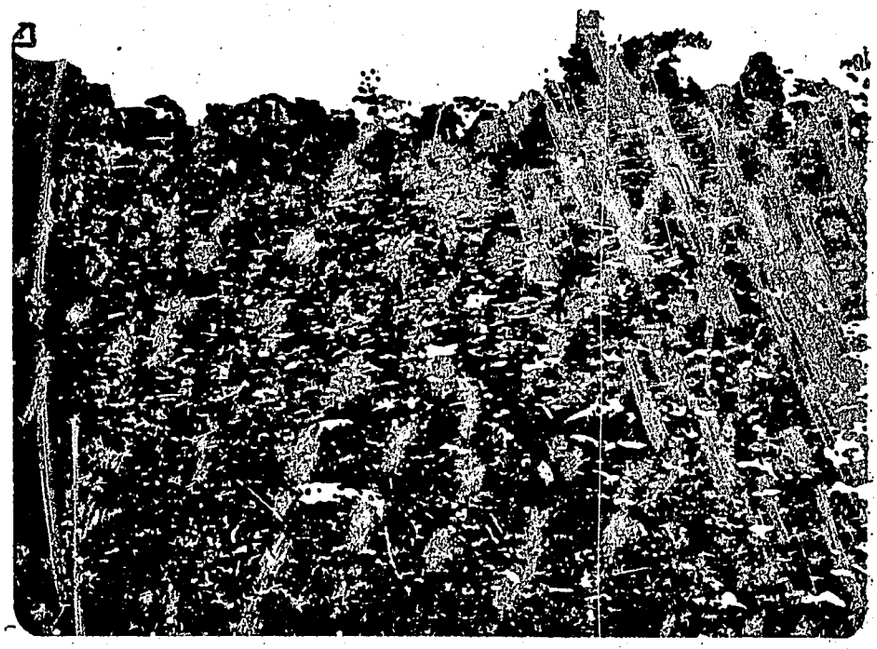

Photo 3: Men (and children's) community defecation area

This also serves as a waste dumping ground, a play area for children, and grain drying area: once annually after the rice harvest, the area is cleared of waste and the ground is plastered smooth with a clay and cowdung paste. For three weeks grain is dried directly on the ground. This area had been used for grain drying just two weeks before the photograph was taken.

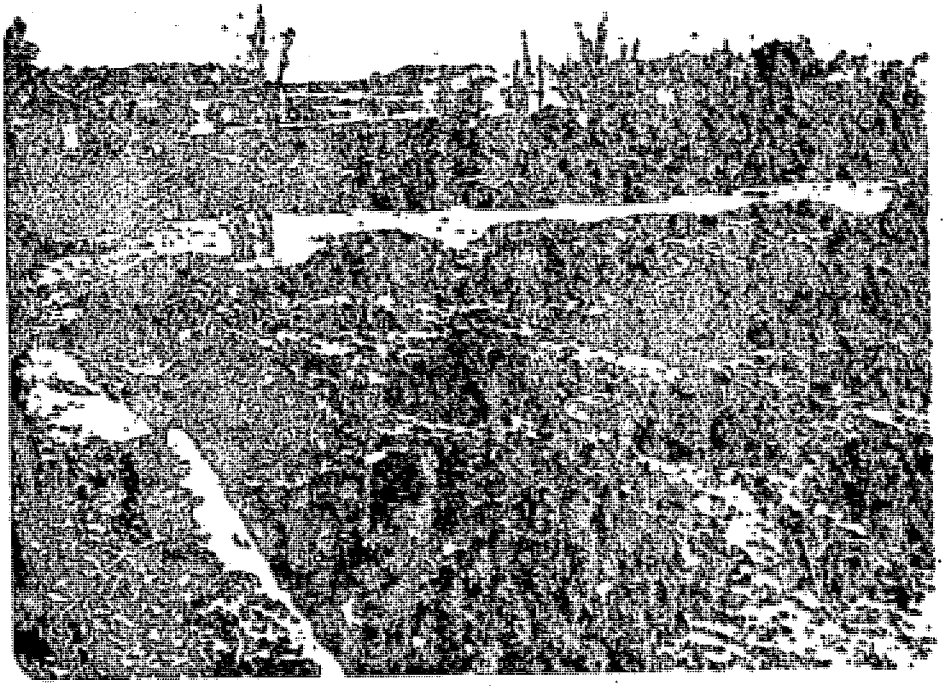

Photo 4: Town Compost Depot, Ward #7, Patan
(see text p. 5)

At the edge of every Newar town, street wastes and septic sludges are mixed with stable bedding and household garbage in compost areas similar to this one. The 'composted' waste is eventually spread by the Podes on Jhyapu's fields.

Applying scientific composting techniques to such a town depot scheme might prove advantageous. If the depot areas were to be fenced off, covered and managed scientifically to assure more thorough aerobic decomposition, fly-breeding would be controlled, the odor would subside and the resulting fertilizer would be safer for agricultural use (possibly also on root crops?).

Photo 5: Women's community defecation area, Patan

Before installation of the community latrine-bio-gas complex (see next photo). This was a $400m^2$ walled compound which served as the meeting point for 3-5000 women/day. What appears to be dirt between the bricks and fetid pools is actually accumulated night soil that is slippery and unsupportive. The liquid portion of the waste flowed out the entrances to the compound (from where the photo was taken) and into a small rivulet, the same water in which the women would clean themselves. The depth of the semi-liquid waste matter was an estimated 20 to 25 cm. Men of the community admitted to never having seen this compound prior to its cleaning, and all showed (feigned?) shock and disgust at its condition.

Photo 6: Women's community latrine bio-gas complex, Patan

Right: Note locking doors leading to the digestor compound. The 1000 litre water tank has sufficient capacity for use by 3-400 persons without refilling (inadequate).

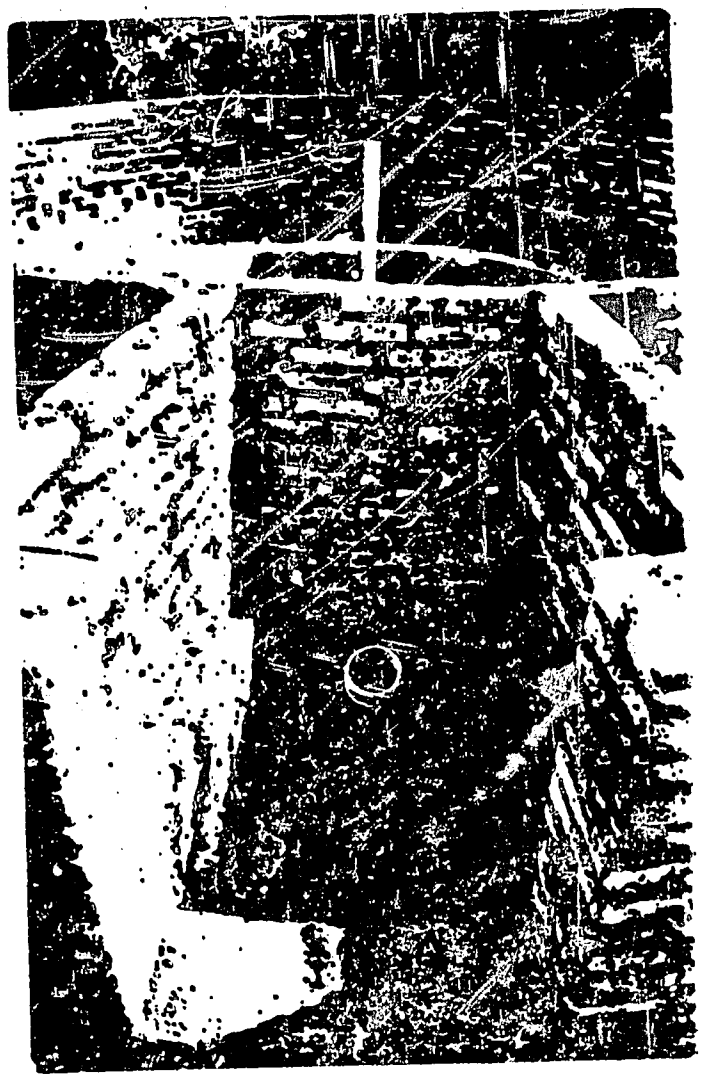

Photo 7: Stall construction on 18-hole women's community latrine bio-gas system, Patan.

The effluent pipe is straight in the event that debris caught in the pipe must be rammed out with a thin bamboo pole. Note the guide pipe for the gas collection hood, centered in the anaerobic digestor in the middle of the latrines.

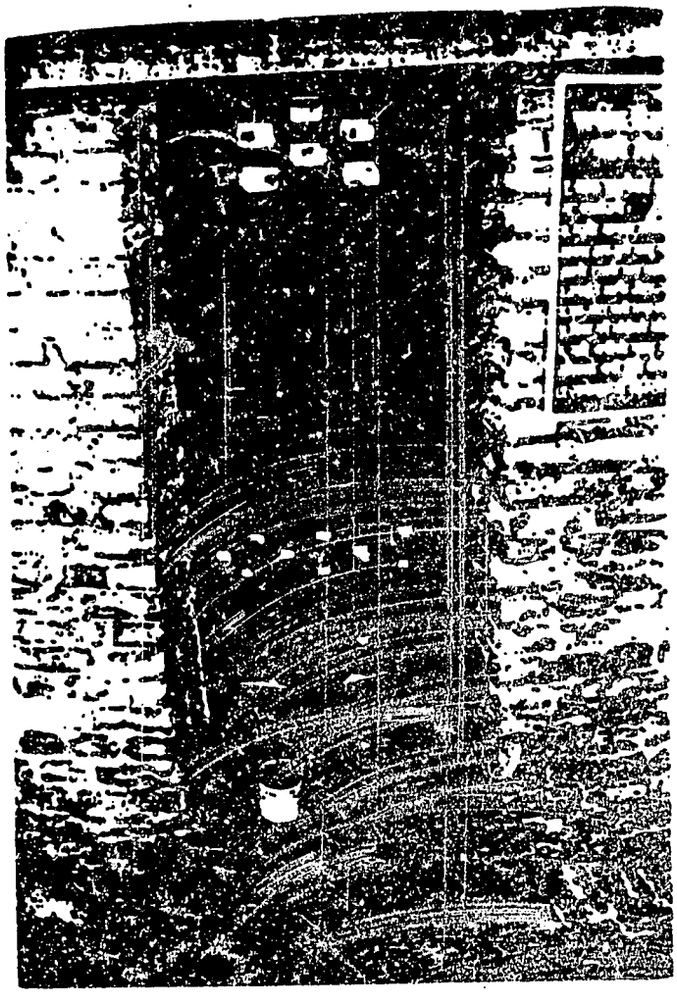

Photo 8: The completed stall (see text, p. 14)

1) The lack of doors
2) Top and bottom ventilation
3) All floor surfaces slope toward the pan
4) Interior walls are plastered smooth to a minimum ½m height.
5) Signboard explaining proper use.

From "Technology, Development, and the Environment: A Re-appraisal", by A.K. Reddy, U.N. Environmental Programme, 1979.

Attachment II-5-B

CRITERIA FOR THE SELECTION OF TECHNOLOGY

1) SATISFACTION OF BASIC NEEDS
   a) does the technology contribute, directly or indirectly, immediately or in the near future, to the satisfaction of basic needs such as food, clothing, shelter, health, education, etc.?
   b) does it produce goods and/or services accesible particularly to those whose basic needs have been least satisfied?

2) RESOURCE DEVELOPMENT
   a) does it make optimal use of local factors (manpower, capital, natural resources, etc.) by
      i) sustaining/generating employment:
      ii) saving/generating capital:
      iii) saving/generating raw materials, including energy:
      iv) developing skills and R & D and engineering capabilities?
   b) does it increase the capacity to produce on a sustained, cumulative basis?

3) SOCIETAL DEVELOPMENT
   a) does it reduce debilitating dependence and promote self-reliance based on mass participation at the local/national/regional levels, enabling the society to follow its own path of development?
   b) does it reduce inequalities? between occupational, ethnic, sex and age groups? between rural and urban communities? and between (groups of) countries?

4) CULTURAL DEVELOPMENT
   a) does it make use of and build on indigenous technical traditions?
   b) does it blend with/enhance valuable elements and patterns in the local/national/regional culture?

5) HUMAN DEVELOPMENT
   a) does it lead to creative mass involvement by being accessible, comprehensible and flexible?
   b) does it liberate human beings from boring, degrading, excessively heavy or dirty work?

6) ENVIRONMENTAL DEVELOPMENT
   a) does it minimize depletion and pollution by using renewable resources, through built-in waste minimization, recycling and/or re-use and blending better with existing eco-cycles?
   b) does it improve the natural and man-made environment by providing for a higher level of complexity and diversity of the eco-systems, thereby reducing their vulnerability?

Previous Page Blank

IX. The Dilemma of Peasant Women: A View from a Village in Yucatan

This article is from "Women in Development: a volunteer training resource book," ACTION/ Peace Corps, 1979

Mary Elmendorf

Of the more than three billion people in the world, more than half still live in peasant communities. Of these, more than half are women. These numbers alone underscore the urgency of knowing more about the life, character, and roles of peasant women in order to better understand the effect that modernization and economic development will have on them. This paper will explore, first, the effect of modernization on the roles and status of peasant women, and second, their entrepreneurial behavior in the light of the cultural, social, and economic variables that determine their opportunities and motivations. It will begin with the changes that industrialization and modernization in Mexico have brought for Mexican women in general and then focus on the women in one particular village—Chan Kom—and the effects that the opening of a highway into the village had on them and on their families, particularly their adolescent daughters.

Women in Modern Mexico

Within Mexico, which is the largest Spanish-speaking country in the world, both in area and in population, there are many Mexicos—ranging from the modern, urban metropolitan area of Mexico City, which has a population of almost ten million people, to another ten million Mexicans living in isolated Indian communities and still speaking their native languages. In many ways the problems of Mexican women are concentrated at the two ends of this rural-urban (or traditional-Westernized) continuum, since their share of the nation's wealth is often a function of the socio-economic group to which they belong. The statistics show that economic development has not brought with it a more equal distribution of income or wealth. Two thirds of Mexico's national income goes to 1 per cent of its population and a third to the remaining 99 per cent of its people (including, of course, women and the indigenous population).[1]

Mary Elmendorf is an anthropologist currently acting as consultant to the World Bank. Her publications include books and articles on women in Mexico.

[1] Pablo Gonzalez Casanova, "Mexico: The Dynamics of an Agrarian and Semicapitalist Revolution," in James Petras and Maurice Zeitlin, eds., *Latin America: Reform or Revolution* (New York: Fawcett World Library, 1968), p. 469.

Previous Page Blank

The rapid industrialization that contributed to Mexico's economic development following World War II meant, for many peasant women, migration from the villages to urban areas to work in factories or as servants. The increased demand for domestic help was a result of the growth of an urban middle class and of the improvement of opportunities for women that took place in the 1950s. Part of the success of the upper-class women who took advantage of new opportunities depended on the help of young women from the villages who could be hired as live-in servants.

For some, domestic service has advantages. The young migrant, while receiving housing and a kind of autonomy, learns how to survive in the urban setting. It can also mean increased economic freedom.[2] In Mexico and other parts of Latin America, some domestic servants are beginning to organize and thereby are gaining improved working conditions and a greater sense of pride. But for others, such as the monolingual or semiliterate women, domestic service can be exploitation of the worst sort, with prostitution, for many, being the only alternative.

Thousands of Indian women who have been driven by poverty from the rural areas to the cities have chosen to be street vendors rather than domestic servants. "The Marias," as they are called, earn only a marginal living, but they have more freedom than they would as domestics and can more easily keep their families together.[3] These women in some ways are not unlike their ancestors in pre-Columbian societies, in which women were active in the market as retail vendors and, at times, as wholesale merchants. It was not unusual in those societies for women to run businesses or engage in other professional activities, and their work gave them high status.[4] The Marias, however, find themselves isolated by language and cultural differences from the urban areas in which they work. Encouragement and support come from kinship networks within the squatter settlements and poor neighborhoods in which they live. Although the same is true for the mestizo rural migrants, unlike the Indian migrants, they do not face the same language and culture barriers. Efforts to retrain the street vendors for more skilled participation in consumer society (as dressmakers, domestics, etc.) have not met with much success. There are, however, some instances of cooperative action by women street vendors—in Nicaragua, for example—which have led to improved self-respect as well as increased income.[5]

Rural women who work at unskilled jobs in factories have found that they are usually paid less than their male co-workers. Statistics gathered in

---

[2]See, for example, Margo Lane Smith, "Domestic Service as a Channel of Upward Mobility for the Lower Class Woman: The Lima Case," in Ann Pescatello, ed., *Female and Male in Latin America: Essays* (Pittsburgh: University of Pittsburgh Press, 1973); and Sarah K. Myers, *Language Shift Among Migrants to Lima, Peru*, University of Chicago Research Paper No. 147 (Chicago: University of Chicago Press, 1973).

[3]See Lourdes Arizpe, *Indígenas en la Ciudad de México: El Caso de las Marías* (Mexico City: SEP/Setentas, 1975).

[4]See Virve Piho, "Life and Labor of the Female Textile Worker in Mexico City," paper presented to the International Congress of Anthropological and Ethnological Sciences, Chicago, Illinois, September 1973; and Anna-Britta Hellbom, *La Participación Cultural de las Mujeres* (Stockholm: The Ethnological Museum, 1967).

[5]See Margaret Hagen, *Public Markets and Marketing Systems of Managua, Nicaragua* (Managua: Instituto Centroamericano de Administración de Empresas, 1973).

the last forty years indicate that the percentage of women in the paid working force has more than quadrupled, from 4.6 per cent in 1930 to 19.1 per cent in 1969. The 1960 census tables also reveal, however, that 45 per cent of the women working that year fell into the lowest income group, as compared to 18.9 per cent of the men; moreover, 72.2 per cent of the women workers were listed in the two lowest income categories, as compared to 53.9 per cent of the men.[6] There are labor laws in existence that require equal pay for equal work; if those laws were strictly enforced, and if the job definitions for women's work were not regularly downgraded, the status of the female industrial worker could improve.

These statistics show the situation of economically active urban women; in the case of rural women there is an enormous disparity between what the statistics show and the actual labor women perform in the agricultural sector. In 1972, only 10.8 per cent of the female labor force was listed as economically active in agriculture and related fields, even though in many rural areas of Mexico the unit of production is the family, with each member performing a necessary role.[7] In those parts of Mexico still engaged in subsistence agriculture, the women serve a fundamental and indispensable role, because the division of labor gives them integral economic and social functions. But at the same time they are tied irrevocably to the family and to family enterprises, to numerous arduous and demanding tasks, and to years of pregnancy and child rearing. Asked if she works, the rural woman will often answer in the negative—even though she may do most of the planting or harvesting and take care of animals and gardens—partly because she usually receives no money, but also because she considers her labor as a family duty. "There is both a differential evaluation of men's and women's work and a different motivation. The man works to *sustenar* [support the family]; the woman to *ayudar* [help to do so] . . . . *Women* work because necessity obliges them to; men work because they are men."[8] Often the woman carries the complete responsibility of the farm for long or short periods while her husband is working in the city, but the man is still designated as "head of the family"—or even, ironically, "the farmer."

It is because modernization and industrialization seem to have meant low-paying jobs for urban women and loss of status for rural women that many people are questioning whether they are the answer to the problems of increasing the rate of socio-economic development and raising the status of women. Some argue that, in fact, the situation of women is worsened by development.[9] A close look at the women in the Mayan village of Chan Kom

---

[6]Gloria González-Salazar, "La participación de la mujer en la actividad laboral de México," in June Nash and Helen Safa, eds., *Sex and Class in Latin America* (New York: Praeger, 1976).

[7]Ibid., Table I.

[8]Verena Martinez-Alier, "The Women of Rio das Pedras," in Nash and Safa, *Sex and Class in Latin America*, op. cit.

[9]See, for example, Ester Boserup, *Woman's Role in Economic Development* (New York: St. Martin's Press, 1970); Elise Boulding, "Women as Role Models in Industrializing Societies: A Macro System of Socialization for Civic Competence," Boulder University of Colorado, 1970, mimeo; Mary Elmendorf, "The Role of Women as Agents for Peaceful Social Change," paper presented to the 11th World Conference of the Society for International Development, Ottawa, Canada, 1971; and Irene Tinker, "The Adverse Impact of Development on Women," elsewhere in this volume.

and their reactions to a new road into the village provides some insights into this question.

Women in Chan Kom

Chan Kom lies inland from the Caribbean beach areas of the Yucatan Peninsula and outside the Merida-Tizul-Valladolid Izamecuen triangle. The region has many archeological sites of interest to tourists. The basic livelihood is subsistence agriculture, using planting sticks and other slash-and-burn techniques as practiced by the inhabitants' pre-Columbian ancestors. The average yield of maize is still about 600-700 kilos per hectare on land that is communally owned (*ejido*). The income of the average family (including the estimated value of production for subsistence consumption) is between U.S. $230 and $380 per year. Per capita income is thus well below U.S. $100 per year. In Chan Kom, as in many villages of this area, there is a high rate of illiteracy among adults, particularly women, many of whom speak only Mayan. The poverty of these communities is attributable in part to their isolation, but it also can be traced to socio-historical factors, such as nearly three centuries of virtual enslavement during the period of Spanish colonial rule and the devastating homage of the nineteenth century Wars of the Castes.

In the Mayan village today, woman's work is sex-stereotyped, as illustrated by such ceremonies as the *Hetzmek*, a kind of baptismal rite. This ceremony is performed when girls are three months old—its symbolism linked to the three hearth stones that are the center of a women's activities. (A similar rite for boys is performed when they are four months old—with four stones used to symbolize the four sides of the corn field in which they will work.) Within this world, however, the women are skilled technicians who have mastered their work and have a high level of self-respect, as well as the respect of their husbands and community. Indeed, women often have decision-making prerogatives. Although many of these decisions are in the private, non-formalized domains, they often relate specifically to change—ranging from decisions to introduce new agricultural techniques, seeds, or fertilizers to the decision of leaving the village to find work or to sell produce or handicrafts.[10] Thus the life of the community is divided in such a way (men working in the fields, women working at home—cooking, taking care of the children, and making and selling handicrafts) that men and women depend on each other. In Chan Kom, as in some other parts of Mexico and the world, subsistence agriculture makes of marriage a union of two specialists; for this reason the women in such a traditional community enjoy far more equality with men than do their more "modern" sisters. The woman often has a feeling of autonomy and dignity and does not consider her work onerous or debasing, for her skills are acknowledged and her work is considered to be just as important as the man's.[11] Men and women recognize such interde-

---

[10] See Beverly Chinas, *The Isthmus Zapotecs: Women's Roles in Cultural Context* (New York: Holt, Rinehart and Winston, 1973); Mary Elmendorf, *Nine Mayan Women: A Village Faces Change* (New York: John Wiley & Sons, 1976), and May N. Diaz, *Tonala: A Mexican Town in Transition* (Berkeley: University of California Press, 1967).

[11] See Mary Elmendorf, *La Mujer Maya en el Cambio* (Mexico: SEP Setentas, 1973), Chinas, *Isthmus Zapotecs*, op. cit., and Lois Paul, "The Mastery of Work and the Mystery of Sex in a Guatemalan Village," in Michelle Z. Rosaldo and Louise Lamphere, eds., *Woman, Culture and Society* (Stanford: Stanford University Press, 1974).

pendence in traditional communities where their lives are still somewhat based on the ancient corn culture. Life is related to the corn god and the rain god, the two Mayan gods for whom ancient ceremonies are still held although there are those who fear such customs will be lost now that change—in the form of a road—has come to the village.

A New Road

After years of effort on the part of the villagers, a hard-top road between Chan Kom and Valladolid was opened in November 1973. It had been hoped that this road would bring more people to buy the village's products and access to better medical care, clients for hotels and restaurants, perhaps even a factory. However, although residents of more remote communities still go there for small items—once their only purchases—they now take advantage of the new road to go on to Valladolid for additional purchases. Thus Chan Kom probably will not get the trade it had hoped for but will become only a way station along the route.[12] Similarly, while the road has opened up access to archeological sites, tourists who come through Chan Kom on their way to the sites rarely stop in the village.

The road has, however, opened up other opportunities. At the time of its inauguration, the women of Chan Kom expressed interest in the establishment of cooperatives for their handicrafts, chiefly hammocks and embroidery. Many of these women are petty traders—"penny capitalists." They have always sold or bartered their own produce—eggs, fruits, fowl—and their handiwork. At the same time, some of them are well aware that handicrafts like theirs are fetching prices in the tourist shops of Chichen Itza and Merida far above what they receive from the middlemen, who normally pay them the traditional "twice the cost of the thread" for their hammocks, and proportionally the same for their embroidery. Thus the women may receive only $3-$10 for a hammock that will be sold in New York for $65. Even before the road was built, some of the women walked for three hours from the village into Chichen Itza to sell their own and their friends' work to the tourists or tourist shops rather than sell to the middlemen who came to the village. These women believe that setting up a cooperative could help increase their total production and at the same time ensure more equitable prices for their crafts.[13] Their hope is that a cooperative would enable them to increase their incomes and continue to use their artistic skills without having to leave the village.

---

[12]When Manuel Avila studied the village of Tepoztlan, he found that the building of the road into that village had played an important role in its economic development because of commercial interchange and mobility. See his study, *Tradition and Growth: A Study of Four Mexican Villages* (Chicago: University of Chicago Press, 1969). Oscar Lewis had noted earlier that Tepoztlan women were quickly becoming sellers of their wares and produce in the market. See his book, *Life in a Mexican Village: Tepoztlan Restudied* (Urbana: University of Illinois Press, 1951). Today most of the stores in Tepoztlan and most of the stands in the market itself are run by women, yet the long-run effect of the road has been to weaken the local marketplace and to increase the importance of trade relations with Cuernavaca: only minor purchases are made in Tepoztlan, while major items are purchased in the city.

[13]See Ilse Azmon and Frank Meissner, "Development of Handicrafts and Rural Industries in Mexico" (Washington, D.C.: Inter-American Development Bank, 1975, mimeo.), p. 6.

However, a cooperative would be a viable alternative for them only if they acquired the technical marketing knowledge necessary to compete with other products in both local and international markets.

This realization of what the road could mean for them is an example of these women's acceptance of change and their eagerness to work. They are not at all frightened by a new language or a new technique. They are eager to communicate and trade. They are even flexible in their approach to their handicrafts and are willing to change details of shapes, designs, sizes, and patterns in order to make their products more marketable. They are very aware of money and of what it can do to prevent the hunger they have known when there was no corn. They teach their daughters to earn money selling eggs and chickens and pass on to them their handicraft skills, just as mothers have been doing for generations. From early childhood they have learned the intricate patterns of coordination to master their work, and they are skilled technicians. They feel a sense of competence and satisfaction in the symbolic and social importance of their work and a gratification from the conviction that work is a virtue.[14] In their own words, they feel that "to work is to live"; that one would become ill without work, just as one would wither away without food. Work is often talked about as creativity, as satisfaction.[15]

The road has increased marketing opportunities for these women and brought some aspects of the modern world to Chan Kom—the villagers already have contributed labor and money to bring in electricity, and three television sets are being shared at ten centavos a viewing. It has also raised for the villagers the question of whether they should leave Chan Kom and go to the city, although many of the older men and women are apprehensive about doing so. For the women, even more than for the men, the prospect of going to the city is frightening, even though they are not really aware of the "ghettoizing" effect of the city. Others fear that the road will bring noise, pollution, crowds, and crime. If it does, some say they may have to leave the village and retreat deeper into the countryside.

The young people seem to have a different attitude, however. During the first year that the road was open, fifty of them—eighteen of them women—did decide to leave Chan Kom. Most of them went to work in Can Cum, a newly established, elegant Caribbean resort. Predictably, most of the women worked as kitchen helpers in hotels, earning about half what the men earned. The women who work at Can Cum are paid approximately 400 pesos a month ($32), which gives them an annual income of $384. Thus they are earning more than the average family of the area. The men earn 800-850 pesos a month as unskilled laborers and have added benefits, such as work camps to live in, weekends off, and, in some cases, opportunities to learn how to operate machinery and to learn other skills that serve to relate them to the modern world. The women, however, do not have the same opportunities; they are still in the kitchen doing their sex-defined chores but experience neither the dignity nor the status they would have in the village.[16]

---

[14] See Paul, "Mastery of Work," op. cit.

[15] See Mary Elmendorf, *The Mayan Woman and Change*, Cuaderno No. 81 (Cuernavaca, Mexico: Centro Intercultural de Documentación (CIDOC), 1972).

[16] Elmendorf, *Nine Mayan Women*, op. cit., pp. 175-76.

Others have left Chan Kom but have remained within the framework of the extended family. They have moved into Merida to live with relatives and to work at various jobs, usually in family businesses or as household help. They have less money income but more freedom and dignity than those who work at the resort; as one of the young women told the author: "The girls working in Can Cum earn more money, but my sisters and cousins who live with my aunt in Merida have a better life and they can save nearly everything they earn." These young women do have a chance to build a base for a future profession—as nurses, seamstresses, pastry cooks, or accountants. These opportunities, in turn, raise other questions for these women: whether they will marry Mayan men, whether they can combine marriage with work. The answers they arrive at will depend on many things, not least their ability to throw aside centuries of tradition. Even more will depend on their ability to become aware of opportunities—in either the rural or modern sectors.

Effects of the Road

Women like the Mayan women of Chan Kom must not lose their feelings of creativity and competence if they are to cope successfully with the changes brought by modernization and exposure to the outside world. Will they be able to hold on to their feelings of self-esteem and cultural identity or will they find themselves caught in a cultural limbo—"nepantla"[17]—carrying out denigrating and low-paying jobs? Rapid changes have taken place in Chan Kom since the road was opened, even though it has not brought all that was hoped for. For some the road has meant the opportunity to leave the village and find new work; for others it has meant the opportunity to remain in the village while earning more for their products. Thus far the women of the village have maintained their self-esteem and cultural identity while at the same time accepting—and even initiating—change that they feel will be beneficial for them and their children.

In many ways the women of Chan Kom are more fortunate than their sisters in other rural areas; they have a rich cultural heritage which provides a sense of dignity, identity, and stability, and a marketable skill which provides a means of livelihood without having to leave the village. For others, unfortunately, the only alternative seems to be migration to the slums, where they have little choice other than to become domestics, low-paid factory workers, prostitutes, or street vendors.

---

[17]Miguel Leon-Portilla, "Anthropology and the Endangered Cultures," *Annual Report, 1974* (Washington, D.C.: American Anthropological Association, 1975), p. 10.

This analysis sheet is from Women in Development: a volunteer training resource book, ACTION/Peace Corps, 1979

Sex Role Pattern Analysis Sheet

Instructions:

As you observe, listen to and experience the culture around you, use the following list of cues/behaviors to structure the gathering of information you need to understand sex roles and to identify patterns. You can use it by selecting a category and finding a situation where male/female roles are acted out every day. You could choose a multitude of settings for structured and planned observation: visit a market; attend a community meeting; see a "family" movie made in the culture or one similar; go to church; visit a family gathering place (the central plaza); walk the city/village streets; visit a farm, etc. Or this could be done over a period of time as you absorb informally a number of community experiences. Also, to cover many categories you might divide them among other trainees, although there is benefit to a number of trainees having focused on the same category.

Before you go out, review the list and place checks (✓) by those cues / behaviors you "expect" to find. Then, after you've been in the cultural situation you chose to observe, return to the list and check (✓) what you did observe or hear. Notice and reflect on any differences. Finally, add any comments or examples you wish to recall.

You are encouraged to add to this list or ignore those items which you know are not culturally relevant. The list is not intended to generalize about all cultures.

Cues/ Behaviors	Expected	Observed/ Heard	Comments and/or Examples
Within the Family (Intra)			
Women stay around home			
Women/girls care for children			
Women do domestic tasks			
Men do strenuous physical labor			
Men served meals first			

Previous Page Blank

(chart continued)
Page Two

	Cues/ Behaviors	Expected	Observed/ Heard	Comments and/or Examples
Within the Family (Intra) (continued)				
Men get meat/protein				
Women discipline children				
Men relate more to male children				
Among Families (Inter)				
Women relate to women				
Women collaborate on chores				
Women have accepted gathering places				
Men have separate gathering places				
Men share "manly" tasks				
Physical distance different between and among men and women				
Eye contact different among and between men and women				
Voice levels different among and between sexes				

(chart continued)
Page Four

	Cues/ Behaviors	Expected	Observed/ Heard	Comments and/or Examples
Community (Religion, Education, Services)				
Women relate to health services more				
Women attend church more				
Boys go to school longer				
Higher education mostly for men				
Men and women sit separately in church				
Women must be veiled (in community or church)				

Attachment II-8-E

Taken from CHP, Guatemala, Peace Corps Training Facility

EXTENSION SKILLS: Important points to be considered for successful education and communication

1. Be prepared - know what you are doing, where you are going and what you want your audience to know when they leave. Ex. Don't prepare your talk an hour before you give it.

2. Always do a practice run of whatever it is you are demonstrating before you get up in front of the group to teach.

3. Start off with a very small chunk of information to be taught. Ex. "How to Build a Stove" would be too broad a topic. Change it to "Building the Base".

4. People learn best by doing. The more concrete you can be the better. Ex. If you are doing a talk on how to make a particular type of soup have everyone make and taste the soup.

5. People remember main points better when presented with visual aids. Illustrate your main points and use the drawings during your talk. Also people tend to understand complex or abstract concepts if they can visualize them. Also remember that points or concepts you find simple others may find difficult. Be sensitive to your audience and explain points thoroughly.

6. Visual aids and/or graphs should be clear depicting objects with which the people are familiar - photographs or pictures cut from magazines are often more easily understood than hand drawn pictures.

7. Changing color and lettering can draw more attention to the visual aids. However, understand that visual aids may be distracting, confusing or misunderstood when they do not mirror people's reality.

8. A vocabulary list of important things, steps and materials in the demonstration can be useful to the demonstrator as well as to the audience.

9. The demonstration should never take place above the audience's line of vision.

10 People remember things that are unusual or make them laugh. Caution - don't overdo it.

11. Physical conditions are important - the demonstration should take place in the lightest part of the room or area; room should be freed of all other distractions; effort should be made to make everybody physically comfortable, etc.

12. It's better to have an active audience than a passive one.

13. Don't read your material.

14. Keep eye contact with your audience. In this way you will build a rapport with them. Also, they will feel like you are talking to them and not at them.

15. Respect the audience members who already know how to do the thing it is that you're demonstrating and get them involved in helping you with the presentation.

16. Repeat your main points. Ex. State them at the beginning of your talk, in the middle and at the end. Again, the next day, repeat the main points or elicit them from your group before you go into any new information. In other words, build

Previous Page Blank

on the previous information.

17. Reinforcement activities following a talk can facilitate learning.

18. Always minimize the cost of the thing being demonstrated making sure that the people have the economic resources necessary to do it on their own; try to utilize materials found in the immediate area.

19. When the demonstration involves making something it is always a good idea to have a finished example to show to the audience.

20. Variety in presentation styles and environment are important.

21. Your talk should contain an introduction that gives a purpose for the information you are going to give. Set the stage for your talk.

22. Try not to use very technical words in the demonstration.

23. Organize your information. Ex. Time/order, Cause/effect, etc.

24. Whenever possible relate what you are demonstrating to the local customs.

25. Keep your demonstration short and limited to the time of day and amount of time that the people have free.

26. If the demonstration involves several steps, either write or draw them so the audience has something to follow as you go, but be sensitive to the fact that some poeple do not know how to read or follow diagrams.

27. Try and involve as many of the people's senses as possible; taste, smell, touch, sight, sound.

28. Your personality is important - smile and be friendly.

29. Speak slowly and clearly. You're probably speaking slowly enough when you think you're going too slow.

30. Don't talk down to your audience. Show them the respect you want them to show you.

31. At the beginning of the demonstration explain briefly what you are intending to do and at the end, summarize what it is you have done.

32. Be sensitive to your audience. If they are getting restless - you may be going too fast, going on for too long, or they may not be understanding you.

33. BE YOURSELF!

EXTENSION EVALUATION CHART

	GOOD	FAIR	POOR
THE DEMONSTRATION			
1. Language easily understood.			
2. Speaks loudly enough to be easily heard.			
3. Comes across as friendly and pleasant.			
4. Conveys enthusiasm.			
5. Maintains good eye contact with the audience.			
6. Comes across as competent in this subject area.			
SUBJECT			
1. Is the subject material useful?			
2. Was the subject selected to fill a need recognized as important by the audience?			
PREPARATION			
1. Was the demonstration planned with all key points included?			
2. Were all supplies, equipment, and visual aids on hand and within easy reach?			
PRESENTATION			
1. Did the introduction give the purpose of the presentation and its relevance to the needs of the audience?			
2. Were sufficient visual aids used?			
3. Were the operations presented slowly, step-by-step, with repetition where needed to maximize understanding?			
4. Was the language used simple and easily comprehended by villagers?			
5. Would villagers feel sufficiently convinced of the benefits of the new technology to try it?			

WORKSHEET

Part I:

Instructions: Please record the lists developed by the large group.

(1)	(2)	(3)
Men are	Persons are	Women are ...

Part II:

Instructions: Use these spaces to record your discussion notes related to the Task you're assigned. Later, make notes from comments of those assigned Task B or vice-versa.

(4)	(5)
Women will need these skills (Task A)	Men will need these skills (Task B)

This is taken from Food: Where Nutrition, Politics and Culture Meet, by Deborah Katz, et.al. Center for Science in the Public Interest

CUSTOM AND FOOD

Pre-test on Foodways

This test is divided into three parts. Part one contains factual statements about foodways; part two highlights major foodway concepts. Mark each statement in part one and two true or false. Part three consists of values statements, and there are no correct or incorrect answers. Their purpose is to help identify food-related values and clarify what effect such values have on eating patterns.

FACTS:

A. Insects have little food value and may actually be harmful to one's health. (FALSE)

B. Meat is the most important food in all cultures. (FALSE)

C. The more a food costs, the more nutritive value it has. (FALSE)

D. When threatened with starvation and hunger in World War II, the Dutch ate tulip bulbs, and the Russians ate cats, dogs and rodents while under seige. (TRUE)

CONCEPTS:

A. Both the availability and acceptability of food determine whether people will eat it. (TRUE)

B. One of the first things immigrants will change is their foodways, because fitting into their new culture in this way will make them feel more secure. (FALSE)

C. Eating meals with friend or family is one of the most important times of togetherness and communication for many people. (TRUE)

D. In order to improve the nutritional quality of someone's diet, it is usually necessary to educate him/her about nutrition only. (FALSE)

VALUES:

A. I love trying new and unusual foods.

B. My major consideration in choosing foods is the nutritive value.

C. I like homemade foods better than the food in restaurants.

D. Certain foods are important to me because of my ethnic, religious or regional background.

E. I will continue preparing these foods when I am older.

F. I eat more when I am bored, frustrated, unhappy or angry.

G. I prefer eating with other people to eating alone.

NOTE: Answers are not given on the actual hand-out.

Was been taken from "Food: Where Nutrition, Politics and Culture Meet", by Deborah Katz, et.al. Center for Science in the Public Interest.

Attachment II-15-5

FOOD CUSTOM QUESTIONNAIRE

Questions	First Person Responses	Second Person Responses
1. What foods did you and your family eat when you were young that you don't eat as much of, or at all, now?		
2. Where did you get your food? (Response should be specific: supermarket, small store, farmers market, home garden, individual farmer, hunting and fishing, wild plants, milkman?)		
3. Who prepared the meals? With anyone's help? How much time did the cook spend on meal preparation?		
4. Were there people in your town or neighborhood who ate much differently from your family?		
5. How often did the whole family eat together? Were mealtimes different then?		
6. What days of the week or year did you eat "special" meals?		
7. What major changes have occurred in food technology since you were a kid? What kinds of gadgets or new foods have become available?		

Previous Page Blank

Questions	First Person Response	Second Person Response
8. Did you or do you eat any foods in order to cure illnesses or injury? Which ones?		
9. Did you or do you avoid eating any foods because they were believed to cause illness or injury? Which ones?		
10. Are you fond of any food because it reminds you of places, things, or people of the past?		
11. Do you eat any foods today that seemed strange or unappetizing when first introduced to you?		
12. What foods or types of food did you particularly cherish when you were young? What foods were considered "fancy" or "special"?		
13. Do you think foods are better or worse today?		
14. What changes in food and foodways do you appreciate? What changes do you regret?		

ADVANTAGES OF LORENA STOVES

1. At least half the wood normally used in cooking is saved.
2. By reducing deforestation, there is less erosion and loss of arable land.
3. Time is saved in collecting and hauling wood.
4. The health of the family is improved as more smoke is vented out of the house, decreasing the possibility of eye and lung damage.
5. More foods can be cooked simultaneously, including the continuous availability of hot water.
6. Cooking may be easier and cleaner in an elevated cooking position.
7. Stove top can be used as a food preparation and/or eating area.
8. Low cost in constructing a stove.
9. Owner built.
10. Prestigious; status item.
11. Jobs are created for stove builders, providing a supplementary income activity.

DISADVANTAGES OF LORENA STOVES

1. Open fire keeps family warm on cold days/nights.

2. The smoke of the stove is needed to minimize pests in the thatched roof as well as in the grains stored above in the loft.
3. Not traditional: the custom is to cook over 3 rocks.

4. Preference to be close to the earth.

5. Friend has a stove, but it is cracking and crumbling; she now uses her open fire.

6. Friend says there is a lot of maintenance involved in having stove. (ie, cleaning of chimney pipe and tunnels).

7. Firebox not responsive to size and type of fuel.

8. Inflexible nature of cooking surface/potholes. Can't be used for large holiday or ceremonial pots.

9. Where do materials come from? We need our soil for agriculture; sand only available down below at river. Where do we locate and how do we transport materials?

10. Materials cost too much; who pays for them?

11. No time to spend two days in building a stove; who will build it?

Taken from "Food: Where Nutrition, Politics, and Culture Meet", by Deborah Katz, et.al. Center for Science in the Public Interest

Attachment II-18-M

FOUR DAY FOOD DIARY

(Adapted from *Food: Where Nutrition, Politics, and Culture Meet*, D. Katz, et.al., Center for Science in the Public Interest.)

Keep a careful, accurate diary of the foods you eat over a four-day period. Record the types of foods, amounts in home measures (cups, slices, etc.) sources of foods (home, vending machines, restaurants, etc.), and where the food was consumed (table, car, park, etc.).

Organize the foods and their amounts into categories (as appearing on the food consumption tabulation sheet).

Mixed foods such as cheese pizza may be counted as ½ serving protein food, ½ serving vegetable, and one serving bread; stew (1 cup) may be considered as ½-1 serving protein, 1-2 servings vegetables, depending on composition; a milkshake may be ½ serving milk, ½ serving sweet, etc.

The following is a list of average servings:

Vegetables - Fruit	½ cup or one unit (1 orange)
1 cup milk	8 oz.

Protein Foods

1 cup beans, cooked	8 oz.
Eggs	1
4 tbsp.peanut butter	4 oz.
Chicken, lean meat, cooked fish	2 to 3 oz.
Cheese	2 oz.

Cereal and Bread

Bread	1 slice
Cereal, cooked	½ to 3/4 cup
Cereal, dry	1 oz.
Cornmeal, grits, rice	½ to 3/4 cup

Crisp Fried Foods 1 oz.

Sweets

2 small cookies
1 cup sweetened drink
1 slice cake
1 doughnut
2 small candies
½ cup ice cream

FOUR DAY FOOD DIARY, continued

	Time	Food and Amount	Source	Place Consumed
Breakfast				
Midmorning				
Lunch				
Afternoon				
Dinner				
Afterdinner				

FOOD CONSUMPTION TABULATION SHEET FOUR DAY FOOD DIARY, continued

Record the number of servings you have daily in each category:

FOOD	Day 1	Day 2	Day 3	Day 4	Total	Total/4= Average Per Day
Vegetables						
Fruit						
Milk						
Protein Foods						
Cereals & Bread						
Sweets						
Crisp Fried Foods						
Miscellaneous						

Session 18

Problems in nutrition: selected case studies

The following situations should be typed on 4" X 6" cards and each one given to a group of participants who will spend 5-10 minutes planning a strategy for improving the nutritional status of the people involved. A recorder is named in each group, and the group's strategies are later shared with all participants in the session.

1. Classes begin at 7:45 A.M. To catch the bus, you must leave your home at 7:00 A.M. You barely have time to wash, dress, gather up your books, and run. By 9:30 you are famished and have difficulty concentrating. How could you cope with this situation?

2. Anna loves to eat -- but mostly between meals. She just can't get enough potato chips, candy and sweet snacks. Frequently she'll drink a few bottles of soda pop a day. She's often so full from these snacks, that she'll skip one or more regular meals. She has just found out that she is pregnant, and is very happy about it. She figures that as long as she stays close to her proper weight (she is a few pounds overweight) she must be eating all right. What could you recommend to help her during her pregnancy?

3. You are just out of school, unemployed and looking for work. You live in a rooming house without a kitchen, so you just use the hot plate to heat up canned soup and hope that someone will invite you over to dinner. If things don't get much better, you are going to have to resort to stealing. Fortunately, you still have a food budget of 10 dollars a week. How can you use it to eat nutritious meals and still make it last a while longer?

4. Your neighbor has four children and her husband has gone to the city to look for work. She must see to the household needs, take care of the children, tend the fields, sew, and still find time to cook nutritious, and cheap meals for the family. She hears from her husband, when he visits on the weekend, that the newest thing is sliced, white bread with marmelade on it. Wanting to please him and seem more "citified", she ponders whether to spend the money. She asks you for your advice. What do you recommend she do to fill the children's bellies as well as please her husband and herself?

5. You and a host-country friend are planning to go hiking and backpacking for a week in an isolated, but spectacular place. Your friend has hiked in before, but never with a foreigner, and feels that maybe you require fancy foods, like steaks and expensive items. Now the friend is feeling that maybe the hike isn't appropriate, and hopes (secretly) that you will make some low-cost, light-weight suggestions. Fortunately, there is water available on the hike. What do you recommend to take on the trip?

PLANT PROTEIN COMPLIMENTARITY

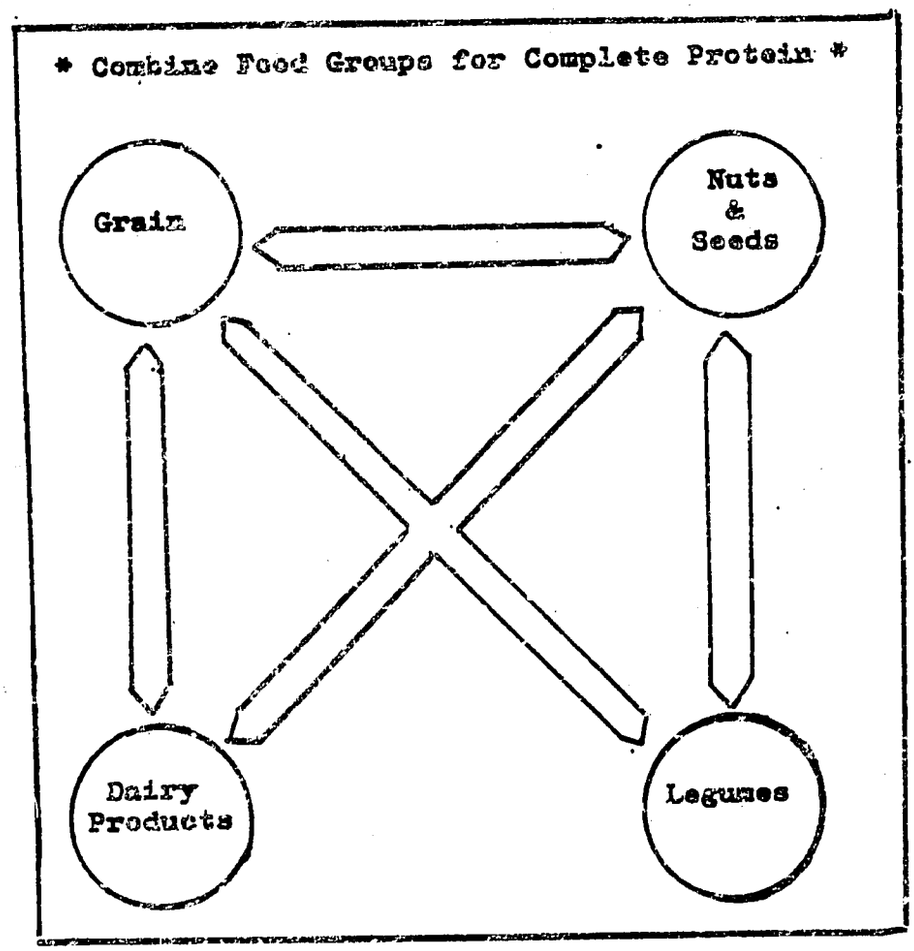

Adapted from page 124, Diet for A Small Planet, by Frances Moore Lappe, 1971, N.Y.: Ballantine Books.

THE FOOD SQUARE

ENERGY (Staple) FOODS	BODY BUILDING (Protein) FOODS
CEREALS AND GRAINS STARCHY ROOTS STARCHY FRUITS IMPORTANCE: Cheap E sources, cereals are also sources of protein, iron and vitamin B-complex	LEGUMES NUTS OIL SEEDS ANIMAL PRODUCTS IMPORTANCE: Low-bulk concentrated E sources; fat = 2 X more E than carbohydrate
PROTECTIVE (Vitamin/Mineral) FOODS	**STORAGE (Energy) FOODS**
VEGETABLES FRUITS IMPORTANCE: Provide vitamin A and C; dark greens are also sources of iron and vitamin B-complex	PURE FATS FAT-RICH FOODS PURE CARBOHYDRATES IMPORTANCE: Combined with staples, these foods increase quantity/quality of protein in meal.

FOOD COSTS LIST

The following foods may be used during the preparation of a low-cost, nutritious and appetizing meal. The foods prepared should be culturally feasible, and in line with what you already know about the foods of the region where you will serve as a PCV. Please plan the menu so that you do not use more than 50 cents per person (make enough for group members to have some of all dishes prepared). Remember that a low-tech approach is appropriate; no blenders or electrical appliances may be used, and that if other a.t. devices are available (e.g., pedal power grinders, solar ovens) they should be utilized in conjunction with the Lorena stove. When you have chosen your "shopping list", please give it to the Trainer so that your supplies will be ready when you begin food preparation. Note: you may order fractions of the amounts listed.

millet — 40 cents/lb
brown rice — 30 cents/lb
white rice — unavailable
wheat berries (whole wheat) — 30 cents/lb
whole wheat flour — 50 cents/lb
whole barley — 30 cents/lb
cracked barley — 40 cents/lb
black beans — 35 cents/lb
soybeans — 35 cents/lb
soy flour — 45 cents/lb
corn (dried) — 25 cents/lb
corn flour — 50 cents/lb
potatoes — 20 cents/lb
peanuts (raw) — 50 cents/lb
chard — 20 cents a bunch
greens — 40 cents/lb
carrots — 45 cents/lb
broccoli — 40 cents/lb
squash — 40 cents/lb
sweet potato (or Yam) — 35 cents/lb
onions — 25 cents/lb
garlic — 15 cents/clove
salt and pepper — 10 cents/ration
chilis (whole) — 5 cents each
ground chili/powder — 40 cents/tbsp.
milk (whole) — 60 cents/quart
milk (powdered) — 30 cents/quart
eggs — 15 cents/each
cheese — 2.00/lb
whole cumin — 20 cents/tbsp.
ground cumin — 50 cents/tbsp.
oregano — 25 cents/tbsp.
sugar — 60 cents/lb
honey — 1.00/lb
bananas — not available, all exported
molasses — 25 cents/lb
oranges — 10 cents each
lemons — 10 cents each
apples — 15 cents each
herb teas — 10 cents a bunch
black teas — 50 cents a bunch
coffee (whole bean) — 4.50/lb
coffee (ground) — 7.00/lb
oil — 1.50/liter
butter — 2.25/lb
margarine — 2.00/lb
coconut — 2.00/lb.
cinnamon — 25 cents/stick
cinnamon (ground) — 50 cents/tbsp.
sunflower seeds — 1.00/lb.
sesame seeds — 1.00/lb.

Assessment/Evaluation of Cooking Exercise

Trainees answer the following questions in groups, analyzing the group process and the type of food prepared. Answers are written and given to Trainers (no individual answers, only as group/team).

1. How were the tasks divided? Who did what?

2. Did all group members participate fully? If not, why (what impeded cooperative effort?)

3. What food was cooked? What was the recipe? (to be collected and then distributed to all Trainees)

4. What was the nutritional value of the food? What nutritional needs did the food satisfy? If there were sources of protein, were they complementary? (illustrate).

5. Did the food taste and look appetizing? If not, what could be done to improve flavor and appearance? Would you use this recipe again?

6. What a.t. devices were used in the preparation? Were they appropriate for the tasks? How could preparation have been more low-tech or appropriate or more efficient?

7. What would you tell others attempting to do the same job to make it flow more easily or better?

8. Were the devices used for food preparation potentially useful and suitable for application during Peace Corps service? Are they potentially appropriate for use by all members of a community, including women and children? Explain your answers, please.

9. Did you notice any implications for health during the use of the a.t. devices? Please state any observations.

TROUBLESHOOTING

If you encounter some of the following problems, here are some suggestions:

Cracked corners: too sandy, too dry; lacking sufficient clay and water as well as needing to be better packed.

No clay or sand available: (first) If minimum clay use molasses, sugar solution, or manure. (second) If minimal sand, use rock, broken pots, or pine needles. (last) Hire transportation to go get material.

Stove body cracks: cut a V into crack and repack mixture.

Chimney clogs: Creosote build-up: clean chimney pipe.

Firebox bridge cracks: don't wobble in cutting damper, straight cut, don't lean on it, wait until dries before making damper, don't make opening too large.

Inside of firebox falls in: if difficult to repair, leave it and create a sloped damper. Or build new firebox or new stove!

Smoke in kitchen: create tighter fitting holes for pots.

Base shifts: if necessary, add mortar with blocks; put frames around base to prevent shifting; put some top to base or even piece of plywood; leave base to dry before adding stove mass. Probably you should plan on stabilizing base with clay and sand mortar.

Uneven or no heating of pots: check mounds, tunnel size, firebox too high or too far away or insufficient oxygen.

Pots sunk too deep: lower tunnels; provide hand hold space to get to pot handle if pot stuck, wait for stove to cool down.

Insufficient draw: check size of chimney pipe (too small/too large?); stove still drying? wood wet? dampers in place? stovepipe above roof line? Have you cleaned the chimney pipe and tunnels for creosote and ashes?

Damper and pothole wear: use an external damper and leave firebox damper. For potholes, add new Lorena mix.

No stove maintenance: follow-up extension work needed to assist stove owners.

Wrong or no damper use: same as above.

Chimney wear: old paint can?

Finishing stove: with fine screened material, varnish, paint or cement.

LORENA MUD STOVE INFORMATION

Stove Design

1. Graph (centimeter square) paper can be used for designing the stove for illustrating number, size spacing, and location of pots as well as size of firebox depending on size of firewood. Consideration should be given to whether cook is left-handed or right-handed.

2. How do people cook, what kinds of fuels are used, size of wood, etc.? What are people's needs? Assess the situation.

3. If there is limited fuel available, the large mass stove may not be the way to go; try low, small mass stove. For example, the Indian Chula mud stove cooks things fast, takes smoke out of the house, and is better used with dung and chopped straw.

4. Stove pipes can be designed using concrete, clay drain pipes, ferromud, bamboo, etc. It is suggested that heavy wire be used in earthquake areas to hold the stove pipe together.

How to Conserve Firewood

Chop wood small.
Use dry firewood.
Cook as many things simultaneously as possible.
Do fast cooking first, then slow cooking.
Use pressure cooker, if possible.
Use the more efficient metal pots.
Keep lids on pots.
Keep pots low into stove.
Make sure pot is tightly fitted into pothole.
Slow boil is more efficient than a fast boil.
Close dampers as much as possible.
Use your own stove in demonstrating efficient cooking.

TASK ANALY

PROJECT : Build a Fuel-Conserving Mud Stove

TASKS	TASK ELEMENTS	PERFORMANCE CRITERIA	KNOWLEDGE AND COGNITIVE SKILLS	MATERIALS	TOOLS
1. Design stove	Establish design criteria & decide on size	Design of stove represents needs of person & is readily understood through drawing	Knowledge of needs of individual or family	Paper	Pencil
	Make top view drawing; mark in positions of pot holes & linking tunnels				
	Indicate size of holes & & label use				
2. Determine soil composition	Shake test	Ability to discover amount of sand in soil	Knowledge of soil types: sand, silt, clay		
	Shine test	Ability to discover amount of clay in soil			
	Worm test	Same as above			
3. Sift soil & sand to fine consistency	Build a sifter	Sifter is rigid	Basic carpentry skills	Wood, nails, screen	Hammer

TASK ANALYSIS

PROJECT : Build a Fuel-Conserving Mud Stove

TASKS	TASK ELEMENTS	PERFORMANCE CRITERIA	KNOWLEDGE AND COGNITIVE SKILLS	MATERIALS	TOOLS
3. Sift soil & sand to fine consistency, cont.	Sift coarse sand			Sand	Shovel
	Sift clay			Clay	Shovel
4. Test mixtures using test blocks for determining strongest mixture	Build mold using prescribed dimensions	Mold is rigid & easily handled	Basic carpentry skills	Wood, nails	Hammer, saw, tape measure
	Mix clay & sand to correct proportions while adding water	Mixture is correctly kneaded	Understanding of relationship between soil types & water	Mud	Shovel
	Fill mold with mixture				
	Remove frame and let blocks dry	Blocks are well formed & do not slump or stick to frame			
	Test blocks for strength & select strongest mixture			Blocks, bricks, or supports	

TASK ANALY

PROJECT : Build a Fuel-Conserving Mud Stove

TASKS	TASK ELEMENTS	PERFORMANCE CRITERIA	KNOWLEDGE AND COGNITIVE SKILLS	MATERIALS	TOOLS
5. Design base	Make side view drawing showing size & shapes of base in relation to stove	Base will adequately support stove & meet needs of family for toe space & height	Calculations of size	Paper	Pencil
6. Construct stove base	Level surface & lay out dimensions on surface Build base to required height (waist) using strongest test blocks	Upon completion, base is level	Knowledge of height of prime stove user	String, sticks Mud blocks	Rake, machete or hoe
7. Build up layers of mud	Smooth mixture in each layer			Mud	Machete or big knife, or masonry trowel
8. Trim mass	Trim sides, smooth top, repair cracks	Sides are even all around		Mud	Machete

TASK ANALYSIS

PROJECT : Build a Fuel-Conserving Mud Stove

TASKS	TASK ELEMENTS	PERFORMANCE CRITERIA	KNOWLEDGE AND COGNITIVE SKILLS	MATERIALS	TOOLS
9. Design layout of pot position & corresponding tunnels	Measure & mark out outline of potholes, damper slots & chimney on stove top	Potholes reflect family's needs & distances re-required		Paper, pots, chimney	Pencil, measuring device
10. Excavate	Slide & core out small holes in center of each pothole & chimney hole				Chimney
	Cut damper slots	Adequate air passage is provided	Knowledge of minimum sizes for stove performance		Machete
	Core firebox & flare entrance	Adequate area is provided for wood & for use as an oven	Same as above		Machete
	Enlarge & shape potholes	Create a tight fit for pots & chimney	Knowledge of family's pots to be used		Spoon, trowel
	Excavate tunnels to connect holes & build up the bottom of each pothole	Arriving heat is directed towards bottom of stove & heats or cooks something	Understanding of heat flow & passage	Mud	Spoon, trowel

TASK ANALY

PROJECT : Build a Fuel -Conserving Mud Stove

TASKS	TASK ELEMENTS	PERFORMANCE CRITERIA	KNOWLEDGE AND COGNITIVE SKILLS	MATERIALS	TOOLS
11. Construct & Install damper doors	Cut metal corners & fold top	Damper fits well in slot & is adaptable to different heights		Scrap metal	Tin snips
	Make row of small holes for nails			Thin nails	Hammer
12. Install chimney pipe	Chimney pipe is elevated & resting above where tunnel enters chimney hole	Smoke exits through chimney pipe		Chimney pipe	
	Fill in cracks & holes, smooth sides & top			Mud	Machete or trowel
	Construct & install food cutting board with anchor (Optional)	Cutting board is secure & stable.	Understanding of family's needs	Wood, nails	Hammer & saw
	Whitewash, paint, or varnish stove	Stove is aesthetically pleasing	Understanding of cultural aesthetics & cost of materials	Lime, paint, or varnish	Paintbrush

TASK ANALYSIS

PROJECT : Build a Fuel-Conserving Mud Stove

TASKS	TASK ELEMENTS	PERFORMANCE CRITERIA	KNOWLEDGE AND COGNITIVE SKILLS	MATERIALS	TOOLS
14. Start fire after stove dries	Place kindling & wood inside firebox & ignite	Fire lights & burns well	Understanding of the combustion of different fuels	Paper, kindling, wood, or other fuel	Matches
	Put water in pots & fit into place	Minimum smokes exits through potholes			
	Open damper doors	Heat & smoke is passing through all tunnels to top of chimney			
	Add wood and cook				
		Overall Criterion Stove performs in accordance with heating & cooking requirements; stove shows no signs of slumping & minimal signs of crumbing & cracking			

PHASE III : PEDAL POWER

HEALTH / NUTRITION

WOMEN IN DEVELOPMENT

THE ROLE OF THE VOLUNTEER IN DEVELOPMENT

PHASE III

	DAY 1	DAY 2	DAY 3
A.M.	Phase II	Session 3: Food First: An Appropriate Technology Approach to Health / Nutrition	Session 7: Health and Nutrition in Cross-Cultural Context: Traditional Health Systems
		Session 4: Classical Mechanics: Principles of Pedal Power	Session 8: Dynapod Construction: Seat
P.M.	Begin Phase III Session 1: Introduction to Pedal Power	Session 5: Familiarization with the Bicycle	
	Session 2: Alternative Uses and Design Considerations for Pedal Power	Session 6: Construction of Stationary Dynapod Frame	

	DAY 4	DAY 5	DAY 6
A.M.	Session 9: Dynapod Construction	Session 10: Health and Nutrition in Cross-Cultural Context: Rural Community Health	Session 13: Maternal and Child Health: Part I
			Session 14: Blacksmith and Metal-working Experience / Communication Skills
		Session 11: Design Power Transfer Systems	
P.M.		Session 12: Technology and Food: Food Processing and Pedal Power	Session 15: Adaptation of Apparatus

Previous Page Blank

	DAY 7	DAY 8	DAY 9
A.M.	Session 16: Maternal and Child Health: Part II	Session 19: Discovering and Defining Women's Roles in Development	Session 22: Volunteer in Development: The Process of Change
	Session 17: Appropriate Technology for Health: The Role of Women and Children in Preventing Dehydration and Malnutrition	Session 20: Assessment and Modifications	Session 23: The Utilization of Pedal Powered Devices in Food Preparation
P.M.	Session 18: Final Adjustments	Session 21: Extension: Communicating Technical Information to Informally Educated People	

OVERALL TECHNICAL OBJECTIVE

Given the necessary bicycle parts, construction materials, and provided with access to a welder, the Trainee will design and build a dynapod, and couple it to a driven apparatus so that it is: culturally viable, appropriate to the specified needs of the user, energy efficient, and durable.

The Trainee will develop and demonstrate effective methods to communicate information to informally educated people concerning a pedal powered device, including potential applications, possible impact on women's roles, and implications for health status improvement in the community.

SESSION 1
Introduction to Pedal Power

Time: 2 hours

Objective: The Trainee will discuss the history of pedal power, as well as perceptions of the technology in the United States, and will adequately make comparisons between advantages and drawbacks of pedal power applications.

Overview: The Participants begin this session by sharing their past experiences with pedal power, discussing its various uses and the ways in which pedal power is viewed in the United States. The Facilitator briefly talks about the history and development of pedal power as an energy source. The Participants then conduct a series of tests on various forms of grain grinding devices, including a pedal power unit, to determine the advantages and disadvantages of each.

Suggested Resources:

McCullagh, James, *Pedal Power*, Rodale Press, 1977; pp. 1-25.

Materials Needed: Pedal power grain grinder, hand grinder, traditional grinding stones.

Procedures

1. (15 minutes) In groups of 3-4, the Participants describe past experiences with pedal power, listing all the applications with which they have either had direct experience or know about through reading.

2. (15 minutes) The Facilitator gives a talk on the history and development of pedal power as an energy technology (see McCullagh, pp. 1-25).

3. (15 minutes) The entire group discusses the perception of pedal power in our society as a small-scale energy source. Questions to be addressed: What status does pedal power hold in our society? In transportation? In small-scale energy use? Is it taken seriously as a renewable energy device?

4. (1 hour) Groups of 3-4 are presented with three types of grain grinding devices: a simple grinding stone like those traditionally used in many parts of the world, a metal hand grinder, and a pedal power grinder. They devise an assessment tool for collecting and comparing data on the relative utility and efficiency of the unit, including the quantity of grain ground versus time, quality of the product, relative energy requirements, and comparative cost.

5. (15 minutes) The small groups share their findings with the larger group. They discuss the relative advantages and disadvantages of each method of grinding grain.

SESSION 2
Alternative Uses and Design Considerations for Pedal Power

Time: 2 hours

Objective: The Trainee will become aware of a variety of appropriate pedal power applications, and will demonstrate an understanding of important cultural and physical design factors.

Overview: The Participants review the various applications of pedal power and discuss the design criteria for such units, including energy efficiency, economic feasibility, choice of materials, and cultural compatibility.

Suggested Resources:

McCullagh, James, *Pedal Power*

Congdon, R.J.,ed., *Introduction to Appropriate Technology*, Rodale Press, 1977.

Attachment III-2-A: Diagram of existing pedal power unit

Attachment III-2-B: Waterpump

Materials Needed: Pedal power devices

Procedures

1. (30 minutes) The Facilitator distributes information on alternative applications of pedal power (McCullagh, pp. 103-104; Congdon, pp. 83-85; Attachment III-2-A; Attachment III-2-B), and leads a discussion and review of the following topics:

   Small tools and machinery, including shop tools, agricultural implements, sewing machines, etc.

   Transportation and hauling

   Water pumps

2. (45 minutes) Using the diagrams and the existing devices, the Facilitator describes the various types of pedal power devices (stationary, mobile, and treadle), their applications and design considerations. The Participants assess the designs and units with special attention to the following:

   Dynapod properties: stability, longevity, ease of operation.

   Construction requirements: adequate skills, proper tools, accessibility, and relative cost of materials.

Previous Page Blank

3. (30 minutes) The Participants discuss the sociocultural factors that could encourage or restrict the application of pedal power as a small-scale renewable energy in less developed countries. Some questions to consider are:

- What are the possible restrictions concerning who may ride bicycles in a particular culture? If women or children were not allowed to ride bicycles, would this effect the use of pedal power devices? With treadle power, would the same restrictions apply?

  Would the fact that bicycles are widely utilized in a country make it more or less likely that pedal power would be adopted for other forms of small-scale energy use? Would the absence of bicycles in a country make the introduction of pedal power more difficult?

  Is there enough energy saving to warrant the investment in a pedal power device? Could the increased productivity encourage people to use a dynapod as an alternative to hand powered devices?

4. (15 minutes) Based on the Appropriate Technology Criteria Sheet (Phase II, Session 5: Volunteer in Development, Attachment II-5-B), the Trainees determine the circumstances in which pedal power devices would be considered appropriate and inappropriate.

Note: This exercise may be done orally, but for more insight to the Trainees' understanding, it should be given as a written assignment, either handed in at the end of the session or the next day. The Trainees' work may be assessed according to the points covered in the Appropriate Technology Criteria Sheet.

SESSION 3
Food First: An Appropriate Technology Approach to Health and Nutrition

Time: 1 hour 45 minutes

Objective: Through discussion, reading and individual thought, the Trainee will develop a working definition of a "food first" approach to health and nutrition in the developing world, i.e. all people have the basic right to adequate and nutritious food, independent of land ownership or economic status. Based on that definition, the Trainee will suggest viable methods of addressing the issues raised, through the development and application of technologies that promote local self-reliance and well-being.

Overview: The implications of two approaches -- "food as commodity" and "food as nutrient" -- are examined, compared, and contrasted, using as illustrations, the food industry and subsistence farming in the U.S. and throughout the world. From that discussion, definitions are developed concerning the philosophy of "food first", and strategies are planned for utilizing appropriate technologies in ways that are designed to improve health and promote local self-reliance.

Suggested Resources

in *The Feeding Web*, Gussow, Joan, ed., 1978, Palo Alto: Bull Publishing Co:

Lappe, Frances Moore and Collins, Joseph, "Food First", pp. 101-108.

Meyer, Maureen, and Gussow, Joan, "Whatever Happened to Food", pp. 122-125.

Wylie, Philip, "Science has Spoiled My Dinner", pp. 163-166.

Newsclip, p. 168.

Lerza, Catherine and Jacobson, Michael, 1975, *Food for People Not for Profit*, N.Y.: Ballantine Books.

Schumacher, E.F., 1973, *Small is Beautiful: Economics as if People Mattered*. N.Y.: Harper and Row, Publ., Inc.

Note: It is suggested that Trainees have read the resource material before this session.

Materials Needed: Paper, pens, newsprint or chalkboard, markers.

Procedure

1. (10 minutes) The Trainer gives a statement of the objective, and defines the term "food first" as it relates to the philosophy of appropriate technology (for example, "food first" is a component

of appropriate technology philosophy, since it is based upon local self-reliance and the promotion of well-being.

2. (15 minutes) On newsprint, the Trainer jots down ideas generated in response to the question: *How has the American diet changed in the last generation?* Trainees are encouraged to give short, immediate responses (e.g. more fast food, more snacks, less home-grown vegetables, etc.). All ideas should be recorded. Then the Trainer asks for some conclusions about health and nutrition status as reflected by such changes. One conclusion that should be stated, if it is not suggested by the Trainees, is that disease patterns in this country have changed in the last century from infectious to degenerative illnesses, in part due to the changing diet in the U.S. (It is interesting to note that in most of the world, illnesses are still infectious in nature; it is only with development and "progress" that diseases become degenerative.)

3. (15 minutes) The differences between whole and processed foods are discussed. As an illustration, a whole grain, such as wheat, is described (and, if possible, shown), and is then compared to a refined product, such as "enriched" white bread (which is only enriched in the sense that some of the nutrients removed during the processing are replaced, along with a few vitamins). A mention should be made of the potential use of pedal power to promote home grinding of flour and local utilization of the entire food.

After comparing the whole wheat and refined wheat bread, the Trainees brainstorm a list of "terrible ten" processed foods (Lerza and Jacobson, pp. 433-434) which the Trainer marks on newsprint. As each food is named, a reason should be given why it appears on the list, e.g., bacon: nitrosamines; coca-cola: no nutrients, peddled in underdeveloped countries, owned by a large corporation. The list of reasons is posted next to the list of "terrible" foods, and is reviewed to identify the terms that indicate "food as commodity", e.g. owned by large corporation, excessive or non-recyclable packaging, low in nutrients, high in price, excessive fat, sugar or salt.

4. (15 minutes) In pairs, Trainees brainstorm characteristics of both cash cropping and subsistence farming, using the following phrases to trigger responses: purpose, effects, meaning of food, energy use, sustainability, etc. Alternating turns, one person reads a term and writes down the other's responses for both cash cropping and subsistence farming, e.g. Purpose: profit, power (cash cropping); nourishment, livelihood (subsistence farming). When the lists are generated, each pair discusses the terms "food as commodity" and "food as nutrient".

5. (10 minutes) The Trainer elicits responses to the question: *What relationship does "food as commodity" have to health and well being? What does "food as nutrient" imply?*

6. (20 minutes) In small groups, the Trainees develop a working definition of "food first" on newsprint; based on that definition, they identify ways in which appropriate technology can address the issue of "food first".

7. (20 minutes) As the groups finish their definitions and plans for utilizing appropriate technology, they post their work (written on newsprint and including their names) so that others may walk around and see each group's efforts.

SESSION 4
Classical Mechanics: Principles of Pedal Power

Time: 3 hours

Interim Objective: The Trainee will understand, to the Trainer's satisfaction, the basic concepts of the mechanical properties which affect the construction and operation of a dynapod.

Overview: In the construction of any system involving power transfer, the forces of operation must be considered. The Trainer demonstrates the mechanical properties that apply to the construction of a dynapod. A discussion follows, and Trainees share observations and deductions concerning the influence of mechanical properties on the construction and use of a dynapod.

Suggested Resources:

Meriam, J.L., *Mechanics*, John Wiley & Sons, Inc. N.Y., 1959.

Attachment III-4-C : Demonstration of Torque

Attachment III-4-D : Demonstration of Momentum and Inertia

Attachment III-4-E : Demonstration of Sprocket Ratios

Attachment III-4-F : Ratio Design

Attachment III-4-G : Basic Formulas

Procedures

1. (30 minutes) The Trainer demonstrates the effects of torque (Attachment III-4- C).

2. (30 minutes) Based on the demonstration, the Trainer encourages the Trainees to develop ideas on construction techniques to offset the effect of torque. (Some examples are: angle bracing, gussets and diaphrams, and various wood joinery techniques, such as lap joints, mortise and tenon.)

3. (30 minutes) The Trainer demonstrates the effects of momentum and inertia (Attachment III-4- D).

4. (30 minutes) The Trainees are encouraged to apply the demonstration principles to dynapod design. A conclusion may be illustrated using the example of a flywheel in certain applications (e.g. grain grinders, shop machinery, and various farm machinery) to store pedaling energy for future use in times of peak load.

5. (30 minutes) The Trainer demonstrates the effects of sprocket ratios (Attachment III-4- E).

Previous Page Blank

6. (30 minutes) The Trainees are encouraged to apply the demonstration principles to pedal power, and from their own observations discuss the differences between chain/sprocket and belt/pulley systems. (Some observations that the Trainer may wish to add include: chain/sprocket systems are up to 98% more efficient, do not slip, and generally have longer lifetimes. Belt pulley systems are easier and less expensive to construct, can change orientation of power rotation, and can utilize local materials and technologies.

7. The Trainer distributes Attachment III-4-G : Basic Formulas, and Attachment III-4-F : Ratio Design. Attachment III-4-F is a worksheet to be completed before *Session 6*.

SESSION 5
Familiarization with the Bicycle

Time: 1 hour

Interim Objective: The Trainee will identify all major parts of a bicycle and be able to dismantle one with ease.

Overview: In order to effectively understand and work on pedal power applications, it is necessary to understand the mechanics and construction of the most common form of this technology -- the bicycle. The Trainer familiarizes the Trainees with practical information about bicycles: different types, parts identification, and disassembly and assembly procedures.

Suggested Resources:

McCullough, *Pedal Power*

Cuthbertson, Tom, *Anybody's Bike Book*, Ten Speed Press, 1971.

Attachment III-5-I : Bicycle Parts

Materials Needed: Bicycle, wrenches, screwdriver, hammer

Procedures

1. (15 minutes) The Trainer discusses the evolution of the bicycle and different types now used.

2. (5 minutes) The Trainer provides the Trainees with a diagram identifying all of the major parts of a bicycle (Attachment III-5-H).

3. (40 minutes) A bicycle is provided to each small group of Trainees, and they practice identifying all major parts, then develop a plan (to be orally verified with the Trainer) to disassemble the unit.

SESSION 6
Construction of Stationary Dynapod Frame

Time: 2 hours

Interim Objective: Given appropriate and sufficient materials, and the dynapod plans, the Trainee will construct the framework in such a manner that it will withstand operating forces.

Overview: Under the direction of the Trainer, the Trainees review and discuss the stationary dynapod plans and construct the basic dynapod frame.

Suggested Resources:

Attachment III-6- I : Stationary Dynapod Plans

Materials Needed: Lumber, hammers, nails, measuring tapes, saw, pencils, squares.

Procedures

1. (5 minutes) The Trainer collects sprocket ratio worksheets from *Session 4* and assesses the Trainees' understanding of ratio theory.

2. (10 minutes) The Trainer leads a brief discussion on the stationary dynapod plans (Attachment III-6-I) and states the objective criteria.

3. (1 hour 15 minutes) The Trainees begin the construction of the stationary dynapod frame, while the Trainer circulates among the small groups to demonstrate the various tool skills and construction techniques.

The Trainees invert and stabilize the frame so that it stays immobile and upright when pedaled. This can be accomplished by bolting or welding a crossmember to the frame and then attaching gussets to the crossmember.

The Trainer observes and evaluates the Trainees' performance using the following checklist:

Did the Trainee use proper stabilizing and reinforcing techniques, i.e. gussets, membranes, diaphrams?

Did the Trainee use proper fastening techniques?

Is the unit stable?

Will the unit stand up to long-term use?

5. (15 minutes) Trainees clean the work site.

Previous Page Blank

SESSION 7
Health and Nutrition in a Cross-Cultural Context: Traditional Health Systems

Time: 3 hours

Objective: Through readings, case studies, role-play and discussion, the Trainee will examine traditional health concepts and systems, and will identify appropriate strategies that consider, respect, and include local health and nutrition practices, customs and beliefs as they relate to the Trainee's future role as an appropriate technology extensionist.

Overview: In this and the following Health and Nutrition session, the Trainees analyze health and nutrition concepts, including their own perception of health systems and beliefs, so that they may better utilize appropriate means of addressing health concerns during Peace Corps service as appropriate technology extensionists. The Trainees examine available health technologies in the United States, and examine individual preferences and biases, in large part determined by cultural perspectives. A short talk is presented concerning traditional health systems throughout the world, and about the difficulties inherent in attempting to superimpose new health programs upon indigenous and traditional ways. As an illustration of the conflicts and interactions that occur between health systems, the Trainees take part in a role-play set in a rural village. The session ends as the Trainees examine the role of Peace Corps Volunteers in appropriate health and nutrition extension, and begin to suggest viable options for future Peace Corps involvement in village health concerns.

Suggested Resources

Lindheim, Roslyn, "How Modern Hospitals Got That Way", in *Co-Evolution Quarterly*, Winter 79/80, pp. 62-73.

Goldman, Laura, *Perspectives of Balance: A Study of Health Traditions in Iluman, Ecuador*, National Technical Information Service, Washington, D.C. 1979, pp. 3-13; 41-93; & bibliography.

Bloem, Kenneth, et.al. *Proceedings of the Working Conference on Appropriate Technology in Health in Developing Countries*, National Council of International Health, Washington, D.C.

American Public Health Association, *The State of the Art of Delivering Low-cost Health Services in Developing Countries*, Prepared for AID, Office of Health, Washington, D.C. U.S. Department of Commerce, National Technical Information Service.

Appropriate Technology for Health Newsletters, World Health Organisation, Geneva, Switzerland.

Brownlee, Ann, *Community, Culture, and Care*, pp. 214-262.

Previous Page Blank

Attachment III-7-J : The Injection: A Case Study in Cross-Cultural Health Care

Note: Before this session, Trainees are encouraged to read Brownlee, pp. 214-262; Lindheim, pp. 62-73; and Goldman, pp. 3-13; 41-93.

Materials Needed: Newsprint, markers

Procedure

1. (5 minutes) The Trainer discusses the agenda for the session, and the objective.

2. (15 minutes) Time is provided for the Trainees to review the assigned readings.

3. (20 minutes) Identifying Health Technologies: The Trainer redefines the terms "health technology", first discussed in the introductory phase of training:

> It is any means, device, or system that is used to promote, improve, restore, or maintain well-being. *Appropriate* health technologies are those means, devices or systems that are culturally acceptable, believed to be medically effective by both the practitioner and the patient, and which serve to promote, improve, maintain or restore well-being.

In order to facilitate the exercise, the Trainer gives a few examples of health technologies, and asks for suggestions from the Trainees. (These may include acupuncture, steambaths, hospitalization, injections, herbal remedies, etc.)

The Trainees form groups of five (which will also be used for the next exercise), select a recorder, and brainstorm a list of health technologies available in the United States. Then, they identify, by consensus, one or two technologies that are acceptable. The "acceptable" health technologies should be reviewed by group members to find if they are also believed to be "appropriate" technologies for health.

4. (15 minutes) All groups join, and the recorder shares the results. The Trainer writes each technology mentioned on a piece of newsprint, under the heading of "acceptable" or "unacceptable". Some examples of technologies that may appear are:

> Acupuncture and acupressure, herbal medicine, chiropractic and osteopathic medicine, faith healing, nuclear medicine, x-rays, "witch" doctors, family physician, hospitalization, primal therapy, zone therapy, reflexology, iridology, fasting, special diets, yoga, massage, surgery, physical therapy,

cupping and bleeding, transfusions, injections and pills, and vitamin therapy.

The Trainer asks for any conclusions that may be reached by looking at the list, and based on the individual group discussions. If the Trainees have difficulty, a conclusion should be suggested. The discussions and lists will probably indicate that acceptable health technologies in the U.S. are those that are considered "traditional" in the 20th-century medical sense, and which follow "modern" medical philosophy. It is likely that the unacceptable technologies will include esoteric, unfamiliar, or "exotic" approaches." (It is possible that some groups will react in a different manner, and other conclusions may be drawn that are not reflective of "mainstream" U.S. culture.) To summarize the exercise, the Trainer should point out that tradition and custom play a very important role in determining individual views of health care.

5. (20 minutes) A short talk may be presented by the Trainer or other resource person, concerning traditional health systems, and covering the following points: (see Goldman, pp. 3-13; 41-93; and Lindheim, pp. 62-73)

The history and health concepts of 20th-century "western medicine.

The similarity of "western" medicine to other traditional systems, including the concept of maintaining and restoring equilibrium as a basis of well-being.

A comparison of folk and scientific medicine

Examples of traditional health systems, including common restrictions concerning behavior and diet.

Potential and real conflicts between indigenous and introduced health systems.

NOTE: A short break may be scheduled before the next activity.

6. (10 minutes) Introduction to Role-play: The last point in the Trainer's talk may serve as a bridge to the next exercise, which illustrates some conflicts that occur between rural, indigenous people and "modern" health care delivery systems. The exercise serves as a problem-solving activity, since it is a Peace Corps Volunteer who is consulted to help resolve the conflict. The Trainer distributes the story (Attachment III-7-J) The Injection: A Critical Incident) and allows a few minutes for the Trainees to read it.

Trainees form groups of five, and the Trainer explains the procedures to follow, using a copy of the instruction sheet that is included in each group's packet (Attachment III-7-J

7. (45 minutes) Following the directions given, the groups of Trainees each choose a recorder, read the characterizations and scenario for the role-play, and then participate in the exercise. When the role-play is completed, they discuss the questions for study (Attachment III-7-J) and prepare strategies (which will be shared with the group at large) to address the problem of meeting the medical needs of a sick child in a culturally sensitive manner (Attachment III-7-J).

8. (20 minutes) All groups join and discuss the role-play exercise. The Trainer may facilitate the discussion by asking how the Trainees felt during the exercise, and elicit comments about the process of enacting the role-play. Then, the recorder from each group presents the strategies developed for dealing with the situation.

9. (15 minutes) The Trainer asks for volunteers (not necessarily from the same group) to re-enact the role-play, utilizing the new ideas just presented.

10. (15 minutes) When the role-play ends, a discussion should focus on the Trainees' perceptions of the role of the Peace Corps Volunteer in health and nutrition extension. (This discussion will be continued in the next health and nutrition session.)

A panel discussion is announced for the next health and nutrition session and a list of topics and a sign-up sheet are posted (see *Session 10*). The Trainees are encouraged to read relevant materials (see *Suggested Resources, Session 10*) and to meet in topic groups to prepare for the panel discussion.

SESSION 8
Dynapod Construction: Seat

Time: 6 hours

Interim Objective: The Trainee will construct a platform and seat that are compatible with the dynapod design, adjustable for operators of various heights, and of sufficient strength and durability to sustain the weight and movement of the operator.

Overview: The Trainees continue the construction of the dynapod framework, adding a platform and seat to the unit. During this session they also begin the Peace Corps Volunteer role-play format in which they will alternate taking the role of facilitator or "PCV" for the group. As each individual completes the role-play, there will be an evaluation period to assess and discuss the "PCV's" performance and role in the group.

Suggested Resources:

Attachment III-8-K: PCV Role-Play Format

Materials Needed: Lumber, hammers, nails, measuring tape, saws, pencils.

Procedures

1. (15 minutes) The Trainer explains the purpose and procedures for the PCV role-play format and distributes Attachment III-8-K. The Trainees determine who will be the first "PCV", and begin the sesssion according to the format. (This exercise will be repeated in a number of sessions, so that all Trainees have the opportunity to practice the PCV role.)

2. (1 hour 30 minutes) The Trainees continue the construction of the dynapod frame.

3. (15 minutes) The Trainees evaluate the PCV role-play according to the format.

4. (10 minutes) Another Trainee assumes the role of PCV and the group begins the second role-play session.

5. (2 hours 20 minutes) The Trainees construct the seat platform and the seat. The Trainer should make available, to the Trainees, the following Task Analysis:

Task A : Determine the location of the seat through experimentation to achieve comfort and efficiency in pedaling.

Task B : Construct the seat support.

Materials: Wood, plywood, nails, seat materials (canvas, leather, etc.), hammer, and saw.

1. Cut and attach supports to the frame so that the seat support is roughly horizontal.

2. Cut and attach gussets and membranes to the support so that it is rigid and strong enough to support the operator.

Task C : Construct the seat by cutting wood to the proper shape and attach it to the dynapod support so that it is structurally sound enough to support the operator safely when the unit is in operation.

6. (15 minutes) The Trainees evaluate dynapod construction progress using the assessment criteria below:

Is the seat adjustable?
Is the seat comfortable for extended use?
Is the seat strong and stable enough to withstand prolonged use?

They then evaluate the PCV role-play according to the established format (Attachment III-8-K).

7. (15 minutes) Trainees clean the work site.

8. (1 hour) Individual reading time is allotted.

SESSION 9
Dynapod Construction

Time: 4 hours

Overview: The Trainees, using the PCV role-play format, finish the dynpod frame and seat construction.

Materials Needed: Hammer, nails, lumber, saws, measuring tape, pencils.

Procedures

1. (15 minutes) The Trainees develop the PCV role-play format for the day, and select a new "PCV" (Attachment III-8-K).

2. (3 hours 15 minutes) The Trainees finish the construction of the dynapod frame and seat (see *Session 8* for tasks and assessments).

3. (15 minutes) The Trainees assess their work (see assessment criteria, *Session 8*) and evaluate the "PCV" according to the established format.

4. (15 minutes) Trainees clean the work site.

SESSION 10
Health and Nutrition in a Cross-cultural Context: Rural Community Health

Time: 2 hours

Objective: See *Session 7*

Overview: The focus of this session is upon appropriate village health care and the role of the appropriate technology Volunteer as a health and nutrition extensionist. Small groups, discussing individual topics, address a number of rural community health concerns: the use of village-based health workers, or "imported" medical teams; the role of traditional practitioners; the role of appropriate technology in health; the philosophy of self-help; preventive vs. curative approaches to health care; and the integration of traditional and modern health systems. Representatives from each group form a panel and give a summary statement of their group's topics, after which the panel takes questions and commentary from the rest of the Trainees. Then, based on readings and the panel discussion, a list of guidelines for appropriate rural community health programs is generated. Finally, the Trainees write a short statement describing their perceptions of the role of the PCV in community health.

Suggested Resources

Note: Resources in this section are divided as to topic. However, the two books recommended for all topics covered are:

Werner, David, *Where There is No Doctor*, Hesperian Foundation, 1977.

Brownlee, Ann, *Community, Culture, and Care*

1. Village-based Health Workers / "Imported" Medical Teams/Units

Werner, D., *Where There is No Doctor*, 1977; Introduction: "Words to the Village Health Worker".

Werner, D., "The Village Health Worker - Lackey or Liberator?", 1977, Hesperian Foundation, Palo Alto.

Paddock, William and Virginia, "We Don't Know How: An Independent Audit of What They Call Success in Foreign Assistance", pp. 87-100. 36;51.

2. The Role of Traditional Practitioners

Section III: "Folk Healers and Ethnomedicine" in *Health and the Human Condition*, 1978, M. Logan and E. Hunt, ed. MA: Duxbury Press, pp. 149-241.

"World Health - Traditional Medicine", Nov. 1977, Geneva:WHO.

Goldman, Laura, *Perspectives of Balance: A Study of Health Traditions in Iluman, Ecuador*, pp. 41-93.

Previous Page Blank

3. The Role of Appropriate Technology in Health (the application of devices and techniques; and including the active participation of women and children)

Proceedings of the Working Conference on Appropriate Technology in Health in Developing Countries, Washington, D.C.: National Council for International Health.

"Appropriate Technologies for Health" Newsletters, Geneva: WHO.

Rihani, May, *Development as if Women Mattered: An Annotated Bibliography with a Third World Focus*, May 1978, Occasional Paper 10, Washington D.C.: New Transcentury Foundation.

Buvinic, Mayra, *Women and World Development: An Annotated Bibliography*, 1976, Wash. D.C. Overseas Development Council.

Tinker, Irene and Bramson, Michele, editors, *Women and World Development*, 1976, Wash. D.C. Overseas Development Council.

4. The Philosophy of Self-Help

"Project Piaxtla" The Hesperian Foundation, pp. 32-33; Approtech, Vol. 2 #2, August 1979.

"The Village Health Worker - Lackey or Liberator?" Hesperian Foundation.

5. Preventive and Curative Health Care Approaches

Werner, D. *Where There is No Doctor*, Introduction, "Words to the Village Health Worker".

"The Village Health Worker - Lackey or Liberator?"

6. The Integration of Traditional and Modern Health Systems

Brownlee, *Community, Culture, and Care*, p. 214-238.

Logan and Hunt, eds. *Health and the Human Condition*, pp. 299-401.

Materials Needed: Paper, pens, newsprint or chalkboard, markers.

Procedure

1. (5 minutes) The plan for the session is outlined, and the topics for discussion are reviewed.

2. (30 minutes) The Trainees meet in their topic groups (decid at the end of *Session 7*) and discuss their readings about the topic. A reporter should be selected to summarize the ideas generated, and any conclusions or recommendations mentioned by the group.

3. (30 minutes) The reporters from each topic group form a panel, and present a short (5 minute) summary of the group's discussion.

4. (20 minutes) Questions and comments are invited from the observers (Trainees and any guests present).

5. (30 minutes) A list of guidelines for appropriate rural community health efforts is established. The Trainer should write the suggestions on newsprint, attempting to consolidate ideas presented. If the group needs assistance, some suggestions may be made, e.g. locally based and operated clinics, active participation in planning and implementation of programs, utilization of local practitioners, minimum dependence on outside support.

6. (15 minutes) The Trainees write a statement defining their views about the role of the Peace Corps Volunteer in rural community health. The statements should be collected for later evaluation, using the following assessment criteria: --Does the Trainee:

- recognize the validity and importance of traditional health beliefs, customs and practices?
- demonstrate an understanding of the sources of conflict between "modern" medical practitioners and indigenous ways (e.g. devaluation of indigenous systems and overvaluation of "modern" systems by non-indigenous people; erroneous understanding of rural people, their customs and beliefs.)
- recognize the PCV's role as one of facilitator, and not "barefoot doctor"?
- make a distinction between provider of services and facilitator of assistance?
- understand economic, social, political and cultural considerations?
- respect the fact that there are other perspectives of reality that are often not the same as the Trainee's?

OPTIONS: This session is ideal for inviting local community resource people, such as a: family doctor, midwife, indigenous healer, dentist, paramedic, or other health care worker. This discussion may be continued during an informal evening panel or gathering, so that the Training community may socialize and talk with local health personnel.

A health worker may be included in the individual groups or on the panel.

A representative from the Hesperian Foundation (*Where There is No Doctor*) may be invited to show slides and present a workshop on rural community health projects.

SESSION 11
Design Power Transfer System

Time: 4 hours

Interim Objective: Given available materials, the Trainee will design a power transfer system that is of the correct size and type, so that the dynapod will power the driven unit in an efficient manner. The design should utilize strong, low-cost materials, be sturdy and potentially long-lasting, and be sized according to gear ratio theory.

Overview: The Trainer guides a discussion on various types of power transfer systems and the sizing of components. The Trainees subsequently choose and utilize an appropriate construction method.

Suggested Resources:

Attachment III-11-L : Sprocket Ratio Worksheet

Attachment III-11-M : Power Transfer Design Option

Materials Needed: Welding unit and rods, oxygen/acetylene gas torch, safety mask, drill and bits, file, metal rasp.

Procedures

1. (1 hour) A worksheet (Attachment III-11-L) is distributed for the Trainees to complete, in order to test their understanding of sprocket ratios. The results are then evaluated by the Trainer and any questions are discussed. Note: In a large group, the Trainer may wish to have Trainees, in small groups, check one another's work while the Trainer circulates among them. The papers may be collected for the Trainer to examine more carefully after the session.

2. (45 minutes) The Trainer opens a discussion on the use of alternative materials for the construction of the power transfer system. At this time, the group should be encouraged to develop their own list of possible optional materials that could be used to construct sprockets, pulleys, belts, chains and bearings. Such possibilities could then be evaluated as to their availability, longevity, and cost. A diagram showing a possible option is then distributed (Attachment III-11-M) and discussed briefly.

3. (45 minutes) The Trainer gives a brief talk about the uses and effects of the flywheel, including the following points:

A review of momentum and inertia, at this point, serves to clarify the way in which a flywheel may be used in pedal power applications to store rotational energy, and balance the dynapod's operation. During periods of minimum load, the flywheel can store energy for subsequent use when the load increases. This energy-storing ability is especially important for grinding grain, or other low-speed applications where the load factors vary considerably.

Previous Page Blank

After the talk the Trainer answers any questions and discusses the design possibilities and use of alternative materials for flywheel construction.

4. (1 hour 30 minutes) Trainees, in construction groups, develop a dynapod power transfer system. They first determine the proper speed at which the unit should be operated by developing an assessment plan to measure its optimal efficiency. Generally, this may be accomplished by mounting the unit and hand-using it to determine operating forces and rotational speed. From this information the groups can now size the sprockets or pulleys to produce the desired results.

The Trainee's power transfer plan is evaluated using the following questions:

Does the system use low-cost, strong materials?
Will it have sufficient lifetime?
Is it sized properly?

SESSION 12
Technology and Food: Food Processing and Pedal Power

Time: 2 hours

Objective: The Trainee will identify ways in which technological change has affected foodways in our society, and how the introduction of pedal powered food processing devices may affect traditional food patterns.

Overview: After reading a paper on U.S. food technology changes, the Trainees develop a list of the ways technologies affect our food patterns, then rank them according to which are most beneficial to people. The Facilitator leads a discussion on pedal power use as a technology for agriculture and food processing. Finally, the Participants discuss the possible ways that pedal power may affect traditional food patterns in developing countries.

Suggested Resources:

"The American Way of Eating", from *Food: Where Nutrition, Politics and Culture Meet*, pp. 22-23, (Deborah Katz, ed.)

Volunteers in Asia, *Transcultural Study Guide*, pp. 108-110; 22-23; 130-132.

Congdon, R.J., *Introduction to Appropriate Technology*, p. 100.

VITA Publication #55E, Volunteers in Technical Assistance, Mt. Rainier, MD; (Handout)

Attachment III-12-N : Casamance Pedal Grain Grinder

Attachment III-12-O : Hand-Powered Grain Mill

Procedure

1. (10 minutes) The Trainees read "The American Way of Eating".

2. (20 minutes) In small groups (3-4), Trainees record, on the basis of their past experiences, "manifestations" of technology in the American kitchen. Possible categories of technology include:

Machines and processes from field to table (which cultivate, pick, process, pack, transport and store food - as manifested through food products in the kitchen).

Machines in the kitchen (which store, prepare, and cook foods.

Sources of energy (mechanical, electrical, heat).

Manufacture of synthetic food and additives.

Mining and manufacture of packaging materials.

The media: TV, radio, printing (which probably account for the presence of most of the foods in the kitchen).

3. (15 minutes) The groups rank by consensus the five technological changes thought to have been the most beneficial to people and the five that have been the least beneficial. Criteria for ranking might include nutrition, time-saving, ecology, economy, sheer pleasure, wider availability of food.

4. (15 minutes) The entire group discusses the rankings and justifies the order they chose.

5. (40 minutes) Using the pedal power handouts, the Trainer leads a review and discussion of the following topics:

Grain grinding: types of grinders, sizing, design considerations, and limitations.

Crop processing and agricultural implements: threshers, winnowers, winches, butter churns.

6. (20 minutes) On the basis of the changes in the U.S. food processing patterns, which were discussed earlier, the Participants examine the cultural impact of pedal power on traditional food technologies, especially regarding community roles, work habits and leisure, food quality, etc.

Either during the session, or as an assignment, the Trainees generate a list of questions to be answered before introducing a new food technology to a rural community. (Such questions may be assessed using, as a checklist, pp. 108-110, 22-23, and 130-132 in *Transcultural Study Guide.*)

Session 13
Maternal / Child Health : Part I

Time: 2 hours

Objective: The Trainee will analyze and demonstrate a grasp of the issues surrounding maternal and child health in developing countries, and will investigate and present to the Training community, viable methods appropriate to Peace Corps service in addressing the basic needs of women and children.

Overview: The issues concerning maternal and child health are broad, complex, and inter-related. Disproportionately high morbidity and mortality rates among women and children in developing countries illustrate that endemic health problems are even more severe during pregnancy, parturition, lactation, and during infancy and childhood. In the next two health and nutrition sessions, Trainees examine the many factors contributing to ill health and death among women and children, then investigate ways in which PCVs can address those problems through appropriate technology extension. A brief talk is presented to state the nutritional and health needs of women and children, as well as to present the factual information about morbidity and mortality rates in developing countries. Based on that information, the Trainees hypothesize reasons for those statistics, then investigate the broader issues surrounding causes of illness and death. Conclusions and implications of the research are then presented during the next session.

Suggested Resources

Werner, David, *Where There is No Doctor*, 1977, Palo Alto: The Hesperian Foundation, pp. 245-282; 283-294; 295-321.

Brownlee, Ann, *Community, Culture, and Care: A Cross-cultural Guide for Health Workers*, 1978, Saint Louis: C.V. Mosby, Co., pp. 192-204.

Eckholm, Eric, *The Picture of Health: Environmental Sources of Disease*, Worldwatch Institute, Washington, D.C., 1977; pp. 17-37; 189-221.

Cameron, Margaret, and Yngve Hofvander, *Manual on Feeding Infants and Young Children*, Second Edition, 1976; FAO/U.N.: New York.

Jelliffe, D., *Child Nutrition in Developing Countries*, 1969 ; AID, Washington, D.C.

American Public Health Association for Peace Corps/ Information Collection and Exchange, *Community Health Education in Developing Countries*, *P & T Manual Series 8*, 1978, pp. 73-85.

World Health Organisation, *The Primary Health Worker*, Geneva, Switzerland, 1977; p. 74; p. 88; pp. 10-32.

Morley, David, *Paediatric Priorities in the Developing World*, Butterworths, 1973.

Maragoli, Women of the Toubou, a film available from ICE or OPTC.

Huston, Perdita, *Third World Women Speak Out*, 1979, Praeger Publishers, N.Y.

Depo-Provera information available from *Boston Women's Health Book Collective, Inc.*, Box 192, W. Somerville, MA 02144.

"The Corporate Crime of the Century", Mark Dowie, et.al. from *Mother Jones*, Nov. 1979, pp. 23-47.

Our Bodies, Our Selves: A Book by and for Women, 1979 (Revised), Boston Women's Health Book Collective, N.Y.: Simon & Schuster.

Infant Formula Program, ICCR (Interfaith Center on Corporate Responsibility) 475 Riverside Dr., N.Y., N.Y. 10027.

Hosken, Fran, ed. *Women's International Network News*, 187 Grant St. Lexington, MA 02173; V4 #1; V4 #2; V4 #3; V4 #4.

Goldman, Laura, 1979, *Perspectives of Balance: A Study of Health Traditions in Ilumán, Ecuador*, National Technical Information Service, Washington, D.C. pp. 79-89.

Procedure

1. (15 minutes) The Trainer presents a short talk concerning the following topics:

   Nutrition/health needs during pregnancy, post-parturition, lactation; and during infancy and early childhood (see: Cameron; Peace Corps/ICE pp. 73-85; Morley pp. 76-99).

   Comparative statistics of maternal and child mortality in developing countries and in the developed world (see: Eckholm, pp. 189-221 and 17-37; Jelliffe, p.8; Morely p. 78 & p. 93).

   Examples of *types* of illness that strike women and children, e.g. respiratory, gastrointestinal, infectious diseases/ conditions (see: Jelliffe, 148; Peace Corps/ICE p. 77; WHO, p. 74, p. 88, pp. 10-32; Morley, chapters 9-17).

2. (10 minutes) The Trainees are asked why they think women and children are such "high-risks". Ideas are brainstormed, and the Trainer should write on newsprint any reasons given. Trainees should be encouraged to think of *issues*, not specific diseases at this time. Some ideas may be: increased need for, and lack of, nutrients; tradition and custom; economic problems;

changing patterns of eating; lack of appropriate or adequate medical care; corporate involvement in drug-dumping, changing land-use patterns; urban migration; inappropriate use of medicines; overpopulation; contaminated water or food supply.

3. (10 minutes) On a different piece of newsprint, the Trainer now writes ideas generated by the Trainees to answer the question: What do you think are some specific diseases or conditions from which women and children suffer in developing countries? Some examples may be: dehydration, diarrhea, measles, chickenpox, mumps, pneumonia, fever, illnesses caused by allergic reactions to drugs; iatrogenically-caused illnesses (contracted in a hospital or from medical intervention); bewitchment; colds; infections; tooth decay; rickets; pellagra; poor eyesight.

4. (20 minutes) The Trainer guides the group in categorizing the broad issues, if necessary; then the Trainees look at the list of illnesses and, on paper, place each disease or condition in categories of probable cause. Illnesses most certainly will fit in a number of categories, but Trainees should attempt to place them in the ones that they consider a major influence in causing the disease. The Trainer should facilitate the exercise by using one category as an example, e.g. changing patterns of eating: malnutrition, dehydration, pellagra, rickets, poor eyesight. It may facilitate the exercise if Trainees work together in pairs; this option may be left up to them, however.

5. (15 minutes) The Trainer asks: *Which diseases appeared in a number of categories? Which categories seems to influence most directly whether women and children are well or ill? What conclusions might this lead you to make?* If the Trainees have difficulty in naming any conclusions, the Trainer should provide one or two: e.g., the same illnesses and problems seem to appear over and over: diarrhea, dehydration, nutrition-related illnesses, respiratory and infectious diseases. Although contaminated water and food supply, changing patterns of eating, lack of appropriate medical care are directly responsible for much illness and death, there are also more subtle and more complex problems that are also linked to maternal and child morbidity and mortality. It is important to recognize that there are many causes and reasons for sickness, and that they are not always immediately apparent.

6. (15 minutes) Trainees should form interest groups so that all major categories are covered. Each group is to investigate both an issue and the related illnesses, and develop strategies for improving health status that are appropriate for a PCV. Conclusions and recommendations will then be presented to the rest of the Trainees during the next session.

Guidelines for the presentations are:

Should be given in a clear, concise, non-technical manner.

Should be limited to 15 minutes.

All group members should participate in the investigation and presentation.

Economic, cultural, political, environmental, and medical factors should all be considered in both the investigation and presentation of strategies.

A list of resources and pages used should be made available to the Trainer.

7. (15 minutes - 55 minutes) Resources are made available for each topic, and groups of Trainees begin to research their chosen topics. The Trainer should be available for consultation during this time.

Option: If desired, some of the working time may be used for relating case studies, or for reading several short stories concerning maternal and child health (see Goldman, pp. 79-89; Huston, *Third World Women Speak Out*). The film *Maragoli, Women of Toubou* may also be shown in conjunction with this class, or during an optional evening film/discussion series.

SESSION 14
Blacksmith and Metalworking Experience / Communication Skills

Time: 2 hours

Objective: The Trainee will develop and demonstrate effective communication skills to be used with a skilled worker or blacksmith in preparation for future interactions during Peace Corps service.

Overview: It is important that the Trainee have a general knowledge of the capabilities and limitations of a blacksmith or metalworker. While in-country, the Volunteer may, on occasion, need assistance in the construction of a particular device component; therefore, it is important to adequately understand the principles of metalworking in order to properly explain the work needed.

The Trainees visit a blacksmith or metalworker after developing a series of work-related questions to be asked during the visit, and then discuss what they have learned about communication skills from the exercise.

Procedures

1. (10 minutes) Trainees form small groups and develop a list of questions about the metalworking trade that have bearing on their dynapod work.

2. (5 minutes) Groups join and consolidate questions into a short and comprehensive list.

3. (1 hour 30 minutes) The groups visit a metalworking or blacksmith shop in the community and discuss their work-related questions with the worker(s). Trainees guide the conversation so that all important areas are covered, such as metal properties, types, availability and costs of metal types, resources, recycled metals, limitation of metal workers, how to facilitate communication with a metalworker so as to get work done properly, and how to develop effective terminology (for possible later application in a foreign language).

4. (15 minutes) The group reconvenes at the site and the Trainees summarize what they have learned about communication skills and methodologies in relation to a specialized worker.

SESSION 15
Adaptation of Apparatus

Time: 4 hours

Objective: Given necessary materials, the Trainees will construct a power transfer system that will make the dynapod function to design specifications.

Overview: Utilizing the PCV format, Trainees use information from the power transfer design session to construct and install the sprocket or pulley system on their dynapod.

Note: During this session, the electric welder and oxy/acetylene torch may be used, so close guidance by the Trainer is important for the Trainees' safety.

Materials Needed: Pulleys, sprocket, welding unit, oxygen/acetylene torch, hammer, safety mask, file, metal rasp, drill, bits, nails, measuring tape.

Procedure

1. (15 minutes) Trainees form small groups and develop the PCV format.

2. (30 minutes) The proper sprockets or pulleys are acquired or built, then adapted to the dynapod pedal crank and driven unit. Then, the Trainees enlarge the hole in the sprocket, if necessary, to fit the pedal crank shaft and mount.

3. (30 minutes) The Trainees mount the driven unit on a dynapod frame so that it is oriented in the correct position in relation to the pedal crank.

4. (30 minutes) The sprocket or pulley is modified so as to fit on the driven unit drive shaft.

5. (30 minutes) The Trainees secure the sprocket or pulley on the shaft so that it is in alignment with the drive sprocket or pulley, and does not slip on the driven unit's drive shaft.

6. (30 minutes) The chain or belt is connected to the system.

7. (15 minutes) The Trainer assesses the Trainees' performance using the following assessment questions:

   Are the sprockets or pulleys true on the shafts?

   Do they have any slip?

   Are the two sprockets or pulleys parallel and in the same plane?

   Does the chain or belt have proper tension, and is it adjustable?

Previous Page Blank

Will the system withstand sustained operating forces?

Can the Trainee lengthen and shorten the chains and belts using simple tools?

Does the system appear to have sufficient lifetime?

8. (15 minutes) Trainees gather and discuss the day's PCV format.

9. (15 minutes) The Trainees clean up the work site.

Session 16
Maternal and Child Health: Part II

Time: 1 hour 30 minutes

Objective: Same as *Session 13*

Overview: Small group presentations focus on the issues concerning maternal and child health, and the Trainees examine appropriate strategies for improving the health status of women and children in a way compatible with the role of the PCV as an appropriate technology extensionist.

Procedure

1. (5 minutes) The Trainees are given the agenda, and guidelines for the presentation are reviewed (see *Session 13, Procedure 6*).

2. (1 - 1½ hours) Each group presents findings and recommendations. The Trainees' presentations are evaluated according to the following criteria:

   Specific illnesses and causative agents should be discussed within the context of broader health-related issues.

   Cultural, social, economic, political, and environmental aspects of the issue should be discussed, where relevant.

   Recommendations for improving health status should be made; these must be appropriate to the role of an appropriate technology extensionist, and sensitive to the needs of rural women and children.

Optional exercise: If the presentations finish early, Trainees may wish to discuss further some of the topics, such as: the bottle-baby syndrome; drug-dumping; female circumcision; or other critical issues facing countries in which PCVs serve.

SESSION 17
Appropriate Technologies for Health: The Role of Women and Children in Preventing Dehydration and Malnutrition

Time: 2 hours 20 minutes

Objective: Presented with criteria for determining types and stages of malnutrition, and shown pictures of dehydrated and malnourished children, the Trainee will identify the probable etiology, visible signs, preventive measures, and recommended treatment for each condition.

Objective: Given recipes for rehydration formulas and weanling foods, the Trainee will prepare an example of each, utilizing appropriate technology devices constructed during the training program (e.g. pedal power, Lorena stoves). In addition, the Trainee will devise appropriate strategies for including the active participation of women and children in combatting dehydration and malnutrition in their own families.

Overview: Dehydration and malnutrition among infants and children are a major cause of morbidity and mortality in developing countries. Recognition, prevention and treatment can all occur in the home; it is only when the child is in an advanced state of dehydration or malnutrition that hospitalization or other medical intervention is necessary. In this session, the Trainees develop an understanding of the causes, methods of prevention and recommended treatment of dehydration and malnutrition in infants and young children. They practice grinding grain on pedal-powered devices, and use a Lorena stove to prepare culturally viable rehydration formulas and weanling foods. During the practical session, Trainees also develop extension skills to encourage women and children in the preparation and use of appropriate rehydration formulas and weanling foods to combat infant dehydration and malnutrition.

Suggested Resources

Cameron, Margaret, and Yngre Hofvander, 1976 / 2nd Edition *Manual on Feeding Infants and Young Children*, NY: U.N. pp. 21-25; 27-38; 105-110; 127-162.

Jelliffe, Derrick, 1969 (revised) *Child Nutrition in Developing Countries*, Wash D.C.: AID, pp. 71-94; 125-132; 176-181.

Werner, David, *Where There is No Doctor*, pp. 107-124; 151-161.

Attachment III-17-P : The Child-to-Child Program (Hesperian Foundation, D. Warner) mimeograph

Note: It is suggested that the Trainees read Werner, pp. 107-124; 151-161, and Attachment III-17-P before the session.

Previous Page Blank

Materials Needed: Photographs of dehydrated and malnourished children; pencils, paper, pedal-powered grinders, Lorena stoves; pots, utensils, drinking glasses, water, millet, corn, rice, carrots, oil, tablespoons, salt, sugar. (Optional: bottle caps, juice or beer cans, gourds, thin cloths, plugs.)

Procedure

1. (10 minutes) A short talk is given about the purpose of the session, including the potential use of pedal power by women (see *overview* and *objectives*) and an agenda for the session is presented (see *procedure*).

2. (15 minutes) The types and stages of malnutrition/dehydration are reviewed (see *suggested resources*) and then illustrative photographs are passed around. The Trainees should be encouraged to comment on probable etiologies, symptoms, methods of preventions and treatment for each case.

3. (15 minutes) A short, written quiz is given in the following manner: selected photographs are shown and the Trainees are to identify the probable cause(s), symptoms, methods of prevention, and treatment for the type of condition pictured. (The Trainer should include an example of at least four conditions: dehydration, marasmus, kwashiorkor, PEM). Following the quiz, the photographs should be reviewed and questions should be addressed Papers are collected for later evaluation on the following criteria:

   The Trainee has identified at least three of the four photographs correctly.

   There is a high degree of accuracy in outlining etiologies, symptoms, preventive measures and treatment.

4. (10 minutes) Rehydration formulas and weanling foods are discussed, recipes are reviewed (Cameron, pp. 127-162), and materials are gathered for the practical experience to follow.

5. (50 minutes) Trainees form small groups (according to region or country assignment) and divide the tasks for preparation of the weanling foods, then the tasks for making the rehydration formula. The following guidelines should be posted:

   Weanling Foods

   -the food must be soft, digestible, culturally viable and nutritious; and should be in the form of a thin paste.

   -use the food square to select and combine foods from each food group.

   -grind grains into very fine flour on a pedal-powered device (grind an extra cup, to be put aside for later use).

-boil water
  -if vegetables will be used, mince and cook them in the boiling water
  -do not use salt or sugar

The general recipe is:

Bring to a boil three times as much water as there is flour. Place approximately 2/3 of the water in another pot. Stir in finely ground flour and vegetables (that have been minced, cooked in boiling water and mashed).

Cook, stirring constantly, for 15-20 minutes, adding water as needed (use only boiled water). If there is water left over, use it in the rehydration formula, or put aside for later use in cooking.

Add a small amount of oil (if available). If fruit is available, a small amount may be mashed and added at this time.

Note: Allow the weanling food to cool sufficiently before serving it to a young child.

Rehydration Formula

-Boil water or leftover liquid from cooking grain (1 ltr.)

-Allow to cool slightly; add salt and sugar (see recipe, Attachment III-17-2).

-If desired, add a bit of flavoring - vegetable, fruit.

-The formula must be culturally feasible.

During the preparation time, each group of Trainees should discuss ways in which the rehydration formulas and weanling foods can be used in culturally compatible ways that include the active participation of women and children.

6. (40 minutes) After the initial preparation has been completed, the following practice occurs:

In each group, members take the roles of the following people:

-a PCV who has been asked to help in the case of a sick or malnourished child

-the child's mother

-a brother or sister of the child (if there are children at the training site, they may wish to participate)

-interested villagers

Using the rehydration formulas, the PCV explains its use and preparation, and ascertains any cultural restrictions (making necessary modifications). If desired, the gourd or spoon activity may be included (Attachment III-17-P). The mother and/or child prepares the formula, and then teaches the villagers how to do it.

The same procedure (changing roles) is followed for the weanling food preparation.

After each demonstration and preparation of the rehydration formula and weanling food (including grinding grain), the Trainees analyze the role-plays. The following questions should be addressed by each group:

How did the demonstration and practice include the active participation of women and children?

How were the rehydration formula and weanling foods modified to be culturally compatible with the area?

How could the extension skills used by the PCV be improved?

How was the use of pedal power included in the demonstration?

7. (10 minutes) The site is cleaned and materials are put away.

SESSION 18
Final Adjustments

Time: 4 hours

Objective: See previous pedal power sessions.

Overview: At this time the dynapod should be completed, although it will be necessary to make final adjustments to some parts of the unit, or to finish detail work.

Materials Needed: Same as in previous sessions.

Procedure

1. (15 minutes) Small working groups develop the PCV role-play format as described in Attachment III-8-K.

2. (3 hours 15 minutes) The Trainees finish work on all areas not previously completed.

3. (15 minutes) The Trainees assess the group's participation in this session, and evaluate the performance of the "PCV".

4. (15 minutes) The Trainees clean the work site.

SESSION 19
Discovering and Defining Women's Roles in Development
(adapted from *Women in Development: A Volunteer Training Resource Book*)

Time: 2 hours 5 minutes

Objective: The Trainee will define and examine the term "Women in Development" and will formulate a description of the term as it relates to the role of the Peace Corps Volunteer as an appropriate technology extensionist.

Overview: This session provides the Trainees with an opportunity to conceptualize the general issues of women in development, and to examine those issues from a theoretical as well as practical point of view. The Trainees examine their individual beliefs concerning women in development and describe their views of the role of local women in Peace Corps appropriate technology projects.

Suggested Resources

Boserup, Ester, and C. Liljencrantz, *Integration of Women in Development: Why, When, How*, U.N. Development Programme, NY: 1975.

Buvinic, Mayra, and N. Youssef, *Women-headed Households: the Ignored Factor in Development Planning*, Prepared for AID; International Center for Research on Women: Washington, D.C. 1978.

Handout: Tinker, Irene, *The Adverse Impact of Development on Women* in *Women and World Development*, Overseas Development Council: Wash, D.C.: 1976.

Peace Corps Program and Training Journal, Vol. IV, #2 and #6: the Tinker article appears in #6.

Attachment III-19-Q : Sentence completion exercise: describing and defining women in development.

Materials Needed: Newsprint and markers, pens, paper.

Note: The handout: *The Adverse Impact of Development on Women* (Tinker) should be distributed and read prior to this session. However, if time allows, it may be read after the introductory talk that begins the session.

Procedure

1. (5 minutes) The session is introduced, the objective stated, and an agenda is presented.

2. (15 minutes) The Trainer gives a talk to facilitate understanding of why, and in what way, the "issue" of women in development has arisen. The following talk, adapted from the *Women in Development Resource Book* may be given:

Previous Page Blank

The term "women in development" is becoming commonly used; sometimes it is referred to as its acronym "wid". However, like many new terms, it does not have an easily derived definition. The concern with "women in-development" has arisen as the result of the observations of development planners and researchers that women were being excluded from the development process. Not only were they not being included in projects that were aimed at improving the lives in their countries, but often they were being placed in a *worse* position because of such projects. Most frequently, women were just overlooked. Their work was assumed not to be particularly significant in terms of the economic development of countries. However, such assumptions overlooked the often carefully balanced relationships and mutually supporting roles that characterize subsistence societies.

As the realization occurs that the neglect of women's roles in development efforts has numerous implications, it becomes increasingly important that development workers, including appropriate technology extensionists, understand the conceptual framework underlying that realization, in order to clarify individual perspectives and clearly define individual roles in development work.

In the United States, the issue of "women in development" first surfaced, expressed in this terminology, in the early 1970's. As a result of concern expressed about the neglect of women and the negative impact of development projects on women, the United States Congress adopted the "Percy Amendment". The Percy Amendment requires all United States government agencies and government-funded projects to examine the impact of their projects upon women in order to develop more equitable and effective development projects. Peace Corps, as a government agency, was, of course, required to comply. However, beyond the legal requirement, Peace Corps, historically concerned with addressing basic human needs, realized that a concern for women in development was an integral part of its mission.

The "women in development" issue is not only a concern of the United States. Indeeed, it is international in scope. The Conference in Mexico City held to commemmorate International Women's Year in 1975 called attention to these issues and adopted an Agenda for Action, which included the following goals to be achieved during the 5-year period 1975-1980 (Note: the goals may be posted or distributed):

- a marked increase in literacy and civic education of women, especially in rural areas;
- coeducational technical and vocational training extended to women and men in the industrial and agricultural sectors;
- equal access to education at every level, compulsory primary education for all, and action taken to prevent school dropouts;

- increased employment opportunities for women, reduction of unemployment and greater efforts to eliminate discrimination in the terms and conditions of employment;
- equal eligibility to vote and to seek elected office;
- greater participation of women in policy-making positions at the local, national, and international levels;
- increased provision for health education, sanitation, nutrition, family education, family planning, and other welfare services;
- recognition of the economic value of women's work in the home, in domestic food production and marketing and voluntary activities not traditionally remunerated;
- direction of formal, nonformal and lifelong education toward the reevaluation of men and women, in order to ensure their full realization as individuals in the family and in society.

These goals were formulated by a group of international women, including many representatives from developing countries. It should be stressed that the issue of women in development is not an American export: it is not "Women's Liberation" in the terms that it has come to be understood by some people in the United States. Yet, it is also important to stress that even though these are goals that have been articulated and agreed upon by many governments, they are, in most countries, a long way from realization. In reality, different countries will realize these goals at different paces, and within the terms of their individual cultures.

3. (15 minutes) The Trainer introduces a "brainstorming" exercise, and may wish to include the following paragraph:

Every movement has its skeptics, its traditionalists and its radicals. In this exercise, you will have a chance to develop your own definition of what "women in development" is and is not. List with me phrases or comments that you believe or that you might expect to hear from people with regard to women in development. Your statements should be short, quick, and "brainstormed"; and although some of you may feel that you want to comment on the statements made, please refrain from rebuttals, justifications, rhetorical answers or criticism of others' remarks.

Before eliciting comments, the Trainer may provide some examples to facilitate the exercise:

- "Women in development implies *people* in development"
- "Women in development is a Western, white, middle class effort to 'fix' the developing countries"
- "Women in development is only a fad"
- "The women in my country are not interested in 'women in development'."

The statements made by the Trainees should be written on newsprint and po

4. (10 minutes) The Trainer introduces the exercise, which will assist the Trainees in identifying their own beliefs regarding women and development. Incomplete sentences are read, and the Trainees are asked to complete the phrase by writing the first thoughts that occur to them (Attachment III-19-Q). If desired, the attachment may be distributed for the Trainees to complete individually.

5. (15 minutes) The sentences are re-read, and the Trainer asks for sample responses. Comments are encouraged, to point out meanings and implications in the phrases given.

6. (20 minutes) In groups of 2-3 (preferably according to region or country assignment), the Trainees write, on newsprint, a definition of women in development (with an attempt to focus on the complexities and controversies of the term). When the definition is written, it should be posted for all to see. People should circulate and read other definitions.

7. (15 minutes) The entire group meets and identifies common elements in the various definitions. If possible, a general definition of women in development should be compiled from the individual ideas.

8. (20 minutes) The Trainees re-group to formulate a description of women in development, in regard to the cultural context of individual job descriptions (or, if countries are not known, in regard to the role of an appropriate technology extensionist). It is helpful if details about the country assignment or local culture are known, so that the description may be more concrete, and less theoretical than the definition in the previous exercise. The description may be as specific as the Trainees wish, and may focus on one aspect of women's roles in particular development efforts (e.g. the potential involvement of women in an appropriate technology project). A short (2-3 minute) description should be prepared so that it may be presented to the other groups.

9. (15 minutes) The descriptions are presented, and discussed in the light of the issues discussed, i.e. conflicts or complements with the local culture; political, social, cultural and economic implications of the descriptions.

11. (15 minutes) A discussion takes place in which the theoretical and specific knowledge about women in development is explored. Controversial or conflicting aspects of women's involvement, and the role of the PCV as appropriate technology extensionist may be discussed, as well as the importance of cultural sensitivity and respect for local custom.

SESSION 20
Assessment and Modifications

Time: 4 hours

Overview: After the dynapod is completed, the unit is evaluated in operation to determine whether it complies with design specifications and operational criteria. Areas needing additional work are modified at this time.

Materials Needed: Same as those used in construction sessions.

Procedure

1. Each group sets up its unit to perform the operation for which it is designed. All groups now circulate and operate each unit while observing both positive and negative aspects of materials use, construction techniques, quality operation performance, and potential cultural acceptability.

2. Each group gives observations to the people that built the unit.

3. Based on the observations made, the dynapods are re-evaluated and any needed changes are made in the design.

4. When the Trainees have made the necessary design modifications on their dynapod unit, the Trainer makes a final evaluation of the dynapods using the assessment questions below:

   Does the dynapod operate in a smooth and efficient manner?

   Is it adaptable to various size operators and both sexes?

   Is it comfortable to operate for long periods of time?

   Does it appear to have a sufficient lifetime of operations?

   Does it appear to be aesthetic enough to be culturally acceptable?

   Can it be easily maintained and repaired?

5. The Trainees clean the work site.

SESSION 21
Extension: Communicating Technical Information to Informally Educated People

Time: 2 hours

Objective: Based on an understanding of the technical information, the Trainee will develop strategies and methods to explain and demonstrate a technical device to informally educated people.

Overview: In this session, the Trainees examine and discuss the problem of communicating technical information to informally educated people, using pedal power technology as an example. After dividing the technology into simple components, and, based on ideas presented in discussion and reading, Trainees will prepare a short explanation/demonstration of pedal power appropriate for presentations to rural villagers. The prepared presentation is given the following day.

Suggested Resources:

"The Married Stones and Some Other Methods of Understanding", pp. 43-52 from *Applied Communication in Developing Countries*, Andreas Fuglesang (The Dag Hammarskjold Foundation, 1973).

Procedure

1. (45 minutes) In groups of three, the Participants select and analyze the most important components in the design, construction, and operation of a pedal power device which would give an experienced and informally educated person a basic understanding of the technology. They compare their lists with those of other groups.

2. (15 minutes) The Participants read the handout from *Applied Communication in Developing Countries*, pp. 43-52.

3. (1 hour) Following the discussion and reading, the original groups prepare (for the following day) a 20 minute presentation to explain and demonstrate a pedal power device to rural villagers role-played by peers. The purpose of the presentation is to communicate the basic ideas surrounding the pedal power technology clearly and in lay terminology so that it may be easily understood by informally education people. Points to consider are:

   Tools and materials, relative cost, energy savings, uses for pedal power, necessary skills, construction requirements, etc.

Previous Page Blank

SESSION 22
Volunteer in Development: The Process of Change

Time: 2 hours

Objective: The Trainees, through examination of personal experiences, discussion with others, and readings provided by the Trainer, will analyze factors contributing to motivation and resistance to technological change. On the basis of such analyses, the Trainee will develop definitions and strategies for appropriate technological innovation.

Overview: The Trainees relate experiences in which technological innovation brought about significant change in their community, family or personal lives. They discuss factors that are influential in contributing to and impeding change, as well as the importance of understanding the interrelationships of such factors in their work as appropriate technology specialists.

Suggested Resources

Foster, George, *Traditional Societies and Technological Change*, 2nd edition; Harper & Rowe, NY; 1973.

Jequier, Nicolas, "The Innovation System in Appropriate Technology", pp. 27-40 in *Appropriate Technology: Problems and Promises*.

Procedures

1. (45 minutes) In triads, the Trainees discuss the events surrounding the introduction of a new technology or technological change that had a significant impact on their community, family, or personal lives. Special attention should to paid to the following questions:

What made you aware of the technology?

What fascinated you about the technology? Made you envious if you didn't have it? Made you proud to have it? Made you fear losing it? Made you skeptical about it?

What factors contributed to its acceptance by your family, your community, or you personally? Its rejection?

How do you feel about the technology now?

Did it address or create a need in your life, family and/or community?

What were the direct and indirect benefits of the technology? Looking back, what was the negative impact of that technology?

Previous Page Blank

How did the change affect other technological patterns, traditio customs? What societal roles were altered because of the change?

Note: The Trainer may also ask the Trainees how they reacted to the questions, especially to emotionally-laden words such as envy, pride, fear, etc.

2. (15 minutes) The groups discuss and list the possible reasons for the acceptance or rejection of a technological innovation.

3. (10 minutes) The Trainer gives a brief talk about the rate of technological change in our society and in the societies of lesser developed countries. (See Foster, chapters on change.)

4. (30 minutes) Based on the readings (Jequier), the Trainees develop a definition of a technological innovation and describe the characteristics of an indiviudal who would be considered an innovator.

5. (20 minutes) All Participants discuss ways in which the Peace Corps Volunteer can utilize the talents of local innovative people to assist in the development of appropriate technology in the community.

6. (Optional exercise) Trainees read pp. 27-40 in Jequier after the session and gather to discuss the issues raised in the arti

SESSION 23
The Utilization of Pedal Powered Devices in Food Preparation

Time: 6 hours

Objective: Utilizing a pedal powered grinder, as well as any other available appropriate technology devices (e.g. the Lorena stove), the Trainee will actively participate in the preparation of two culturally and economically viable foods that fulfill the criteria of taste, appearance, acceptability, and nutritional value.

Objective: After preparing foods utilizing a pedal power grinder, the Trainee will develop strategies for including the active participation of women and children in the use of pedal powered devices, and will discuss the relative advantages and disadvantages of pedal power as an appropriate technology for health and nutrition.

Overview: In order to determine and understand the relative appropriateness of pedal powered devices, it is crucial that the Trainees have sufficient practical experience before introducing such technological innovation on a village level. In this session, the Trainees gain a practical perspective on the planning, and preparation of foods utilizing pedal powered grinders and other appropriate technology devices that they have constructed. First, they discuss ideas for foods that can be prepared using pedal powered grinders, then choose from among those ideas a main dish and a snack or dessert. Using a "shopping list" of available foods, they select ingredients, maintaining the costs at no more than 50 cents per person. When the meal is cooked, groups of Trainees join to discuss the potential appropriateness of pedal power in their future Peace Corps service, including its potential for involving women and children as active participants in its application.

Suggested Resources

Same as for *Phase II, Session 20* & Attachment II-20-Q

Materials Needed: Pedal powered grinders (at least one per group); Lorena stoves (any any other appropriate technology devices); kindling, firewood, matches, baking soda (in case of grease fire); rags or pot holders; pots, pans, and cooking utensils; pens and paper.

Procedure

1. (10 minutes) The session is outlined, and an agenda and guidelines are posted for the day's activities.

2. (30 minutes) In groups of 3-4 (these may be comprised of people going to the same region or country, or of those who worked together on a pedal powered device), the Trainees generate a list of foods that may be prepared using pedal power. Some examples that may facilitate the exercise are: peanut or other nut or seed butter, foods using flour, meal, cracked grain or legume, or tamales.

Using the list of available foods (Attachment II-20-Q), recipes, and cookbooks, Trainees formulate a "shopping list" of items needed in order to prepare a main dish and a snack chosen, by consensus, from the ideas listed. The two foods prepared should be low-cost, nutritious, appetizing, and potentially acceptable in Peace Corps countries (following the guidelines in Attachment II-20-Q). They should also utilize variations in the pedal powered grinder, i.e., coarse or fine grinding, or grinding more than one food so that the device may be tested on a number of tasks.

Note: During this time, the Trainer should be available for consultation; if local community members are available, they may assist also.

3. (30 minutes) Materials are gathered, food obtained, and tasks divided among group members. One person may serve as the PCV, or facilitator, in each group; however, there should be active participation by all involved.

4. (2 hours) Food is prepared.

5. (1 hour 30 minutes) Each group joins with another small group to share the meal, give the prepared presentations (see *Session* Procedure 3) provide feedback, and discuss observations made During the discussion, the following questions should be addressed (it is helpful if a recorder takes notes to facilitate a later discussion involving all groups):

How might the introduction of pedal powered devices ve an effect on tradition and custom in a rural setting?

What are some effective techniques for communicating technical information to informally-educated people?

What factors might prevent or encourage the use of pedal or treadle power by women? by children? by cooperatives or community groups?

When would pedal power be an appropriate innovation? an inappropriate disruption?

If pedal powered devices diminish workloads, what happens with the added "leisure" time provided?

6. (30 minutes) Materials and leftover food are stored, and the site is cleaned.

Note: Pedal powered grinders should be cleaned well by grinding some flour or dry bread to remove any oily residue. Carefully take the device apart to finish the job. If food is left in th grinder, it may become rancid, or invite rodents or insects.

7. (50 minutes) A general discussion occurs, including all groups. Recorders from each group report on the discussions held during lunch time, and all group members are encouraged to share comments. The evaluation questions are distributed (Attachment II-20-R) and answered by each group.

P H A S E III: ATTACHMENTS

III-2-A : Diagrams of Existing Pedal Power Units
III-2-B : Waterpump
III-4-C : Demonstration of Torque
III-4-D : Demonstration of Momentum and Interia
III-4-E : Demonstration of Sprocket Ratios
III-4-F : Ratio Designs
III-4-G : Basic Formulas
III-5-H : Bicycle Parts
III-6-I : Stationary Dynapod Plans
III-7-J : The Injection
III-8-K : Peace Corps Volunteer Role Play Format
III-11-L : Sprocket Ratio Worksheet
III-11-M : Power Transfer Design Options
III-12-N : Casamance Pedal Grain Dryer
III-12-O : Hand-Powered Grain Mill
III-17-P : Child-to-Child Program
III-19-Q : Sentence Completion Exercise

Task Analysis: Build a Stationary Dynapod from Bicycle Parts for Powering a Food Grinder
Task Analysis: Build a Mobile Dynapod Using a Functional Bicycle
Task Analysis: Build a Treadle Powered Device to Operate a Working Piece of Equipment

Attachment III-2-A

Diagram of an Existing Unit at the Farallones Institute

MOBILE DYNAPOD

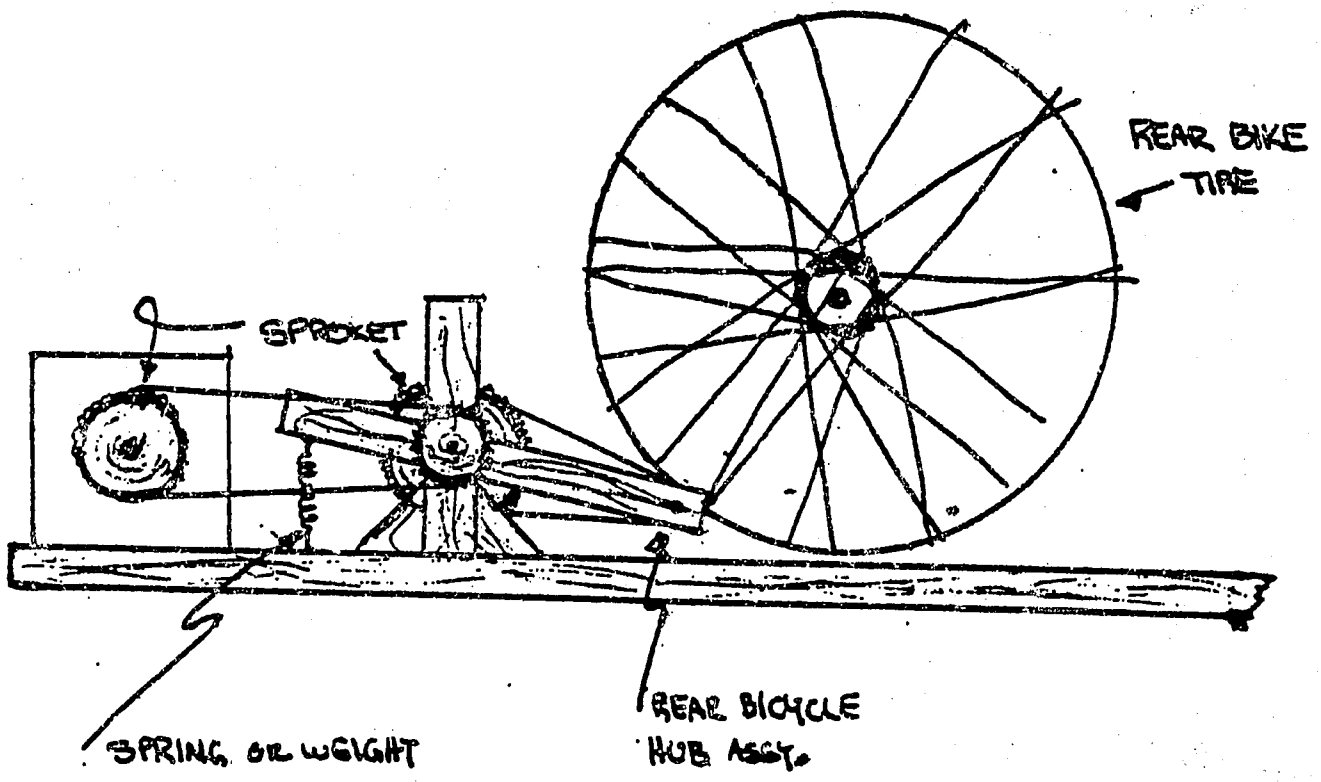

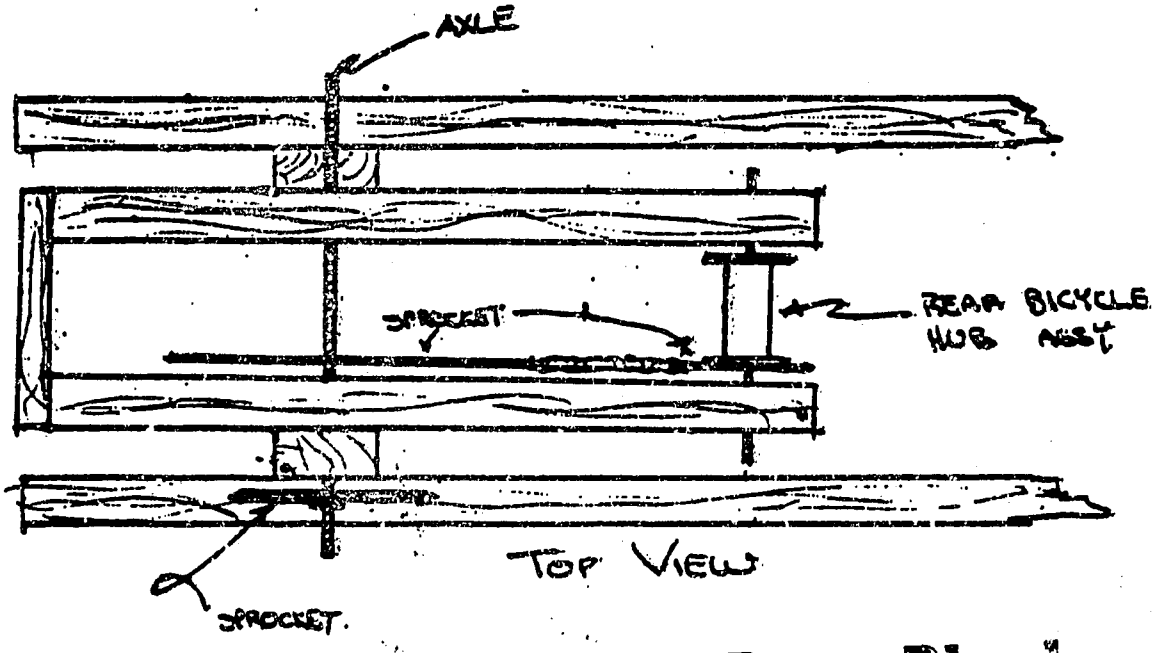

Previous Page Blank

From *Appropriate Technology Sourcebook*, K. Darrow & R. Pam, Volunteers in Asia, 1978.

Attachment III-2-B

WATERPUMP

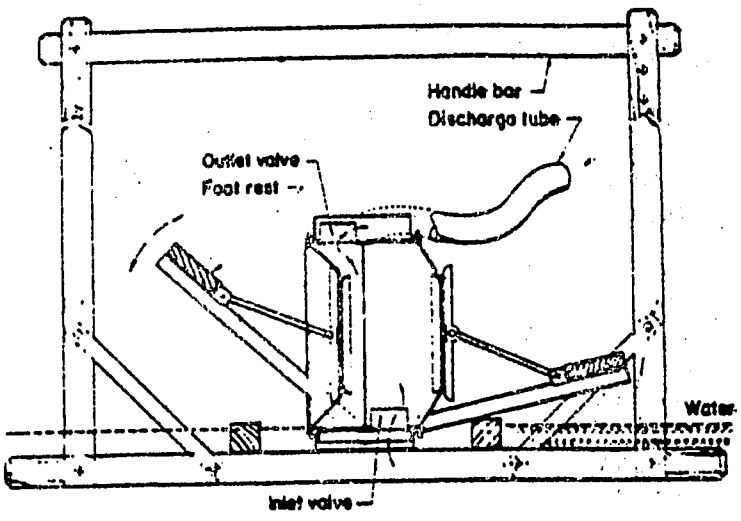

DEMONSTRATION OF TORQUE

Through this demonstration, the Trainees will gain practical understanding and experience with the effects of torque, and its relationship to pedal power devices.

Time: 30 minutes

Procedure:

1. Nail 2 boards together in a V-shape.

2. Ask a Trainee to grasp the two boards at the middle and attempt to pull them apart by opening the "V". The Trainee should take note of the force required to move the boards.

3. Repeat the experiment, but with the Trainee grasping the ends of the boards.

4. Ask for a comparison of the force required to move the boards when they are grasped at different distances from the juncture. The conclusion will be that it takes much less force to pull the boards apart at the end mark, i.e., equal forces exert more effect on the juncture when they are at a greater distance from it.

Encourage the Trainees to express the relationship between applied force and the distance at which it is exerted, using the boards as an example. Such a relationship describes torque, and may be expressed in the following formula: torque = force applied x distance of applied force to the point of uncture.

Attachment III-4-D

DEMONSTRATION OF MOMENTUM AND INERTIA

This demonstration facilitates the Trainees' experience with the effects, parameters and relationships of momentum and inertia to pedal power.

Time: 30 minutes

Materials Needed: Wheel or disk, axle, 4 weights (total weight approximately equals that of the wheel or disk).

Procedure

1. Mount the wheel or disk on a shaft so that it can be easily rotated.

2. Have a Trainee rotate the wheel at an approximate given speed, taking note of the force required to start it rotating, and the time it takes to coast to a stop after the force is withdrawn. Then, have the Trainee again rotate the wheel up to speed, and then try to stop it quickly, noting the force required to stop its motion.

3. Distribute four weights equally around the near rim of the wheel, and repeat the procedure.

4. Encourage the Trainees to note the effects of the added weights, i.e., that it takes more effort to start the wheel rotating with the added weight, but that the wheel rotates freely for a longer time.

5. Encourage the Trainees to discuss the relationships they see between the parameters of momentum (which are the initial weight of the wheel and its added weights), the wheel's rotational velocity, and its radius.

DEMONSTRATION OF SPROCKET RATIOS

This demonstration facilitates the Trainees' experience with the effects, parameters, and relationship of sprocket ratio to pedal power.

Time: 30 minutes

Materials Needed: Multiple speed bicycle.

Procedure

1. Put the bicycle in low gear and lift the rear wheel off the ground. Have a Trainee observe how many times the rear wheel rotates for each revolution of the pedal crank.

2. Change the gear ratio to a higher gear and repeat Procedure 1.

3. In the above two procedures, encourage the Trainees to note the relative difference in force necessary to turn the pedal crank.

4. The Trainees should now discuss their observations and develop the formula which defines the relationship between sprocket sizes and rotation speed. This relationship is defined as:

$$\frac{\text{size sprocket A}}{\text{size sprocket B}} = \frac{\text{velocity sprocket B}}{\text{velocity sprocket A}}$$

5. The Trainees should also discuss the potential mechanical advantage when sprockets are oriented in the proper fashion, i.e. that transferring energy from a small to a large sprocket results in a velocity loss, but in a mechanical advantage or gain.

1. Given the mobile dynapod designed to power a food grinder that operates at 100 revolutions per minute, size the sprocket that will be connected to the grinder shaft:

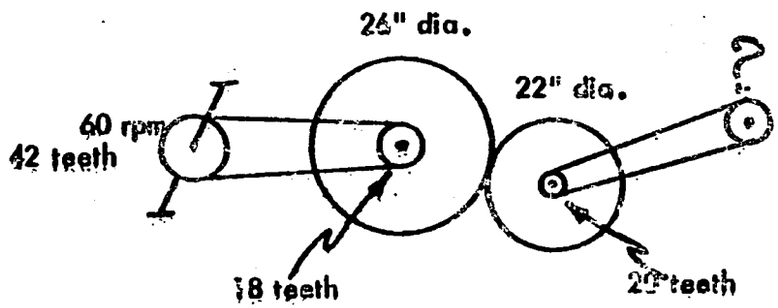

Available Sprockets:

35 teeth
42 teeth
48 teeth
18 teeth
22 teeth
30 teeth

2. Given the stationary dynapod, size the two sprockets in question to provide the required 400 revolutions per minute output in low gear on the bicycle.

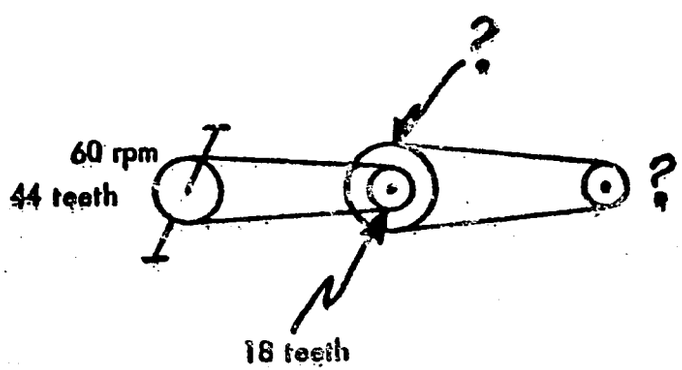

1st gear 1.4/1
2nd gear 1/1
3rd gear 1/1.4

3. Design a mobile dynapod unit that will provide the driven output shaft speed of approximately 1,200 revolutions per minute necessary to power a bench grinder. The bicycle used will have a front sprocket of 48 teeth and a rear hub sprocket of 18 teeth.

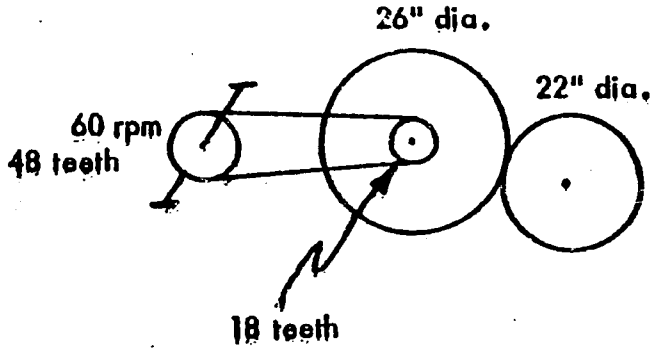

Available Sprockets:

35 teeth
42 teeth
48 teeth
18 teeth
22 teeth
30 teeth

4. Design a system which will deliver power in a linear mode for a water pump designed to operate at 15 cycles per minute. Peddling speed of 60 revolutions per minute will be used with a belt/pulley combination. The pump has a driving rod throw of 8".

BASIC MECHANICS FORMULAS

Basic formulas involving mechanics of the dynamics of a dynapod:

$v = s/t$

v = velocity
s = distance travel
t = time in travel

$c = \pi d$

c = distance around outer surface of a circle
π = 3.14159 a constant
d = distance across a circle from one side to the other and passing through the center

$G = mvr$

G = momentum
m = mass
v = velocity
r = radius of rotation

$L = Fd$

L = torque
F = force applied
d = length of lever arm

Attachment III-5-H

PARTS OF A BICYCLE

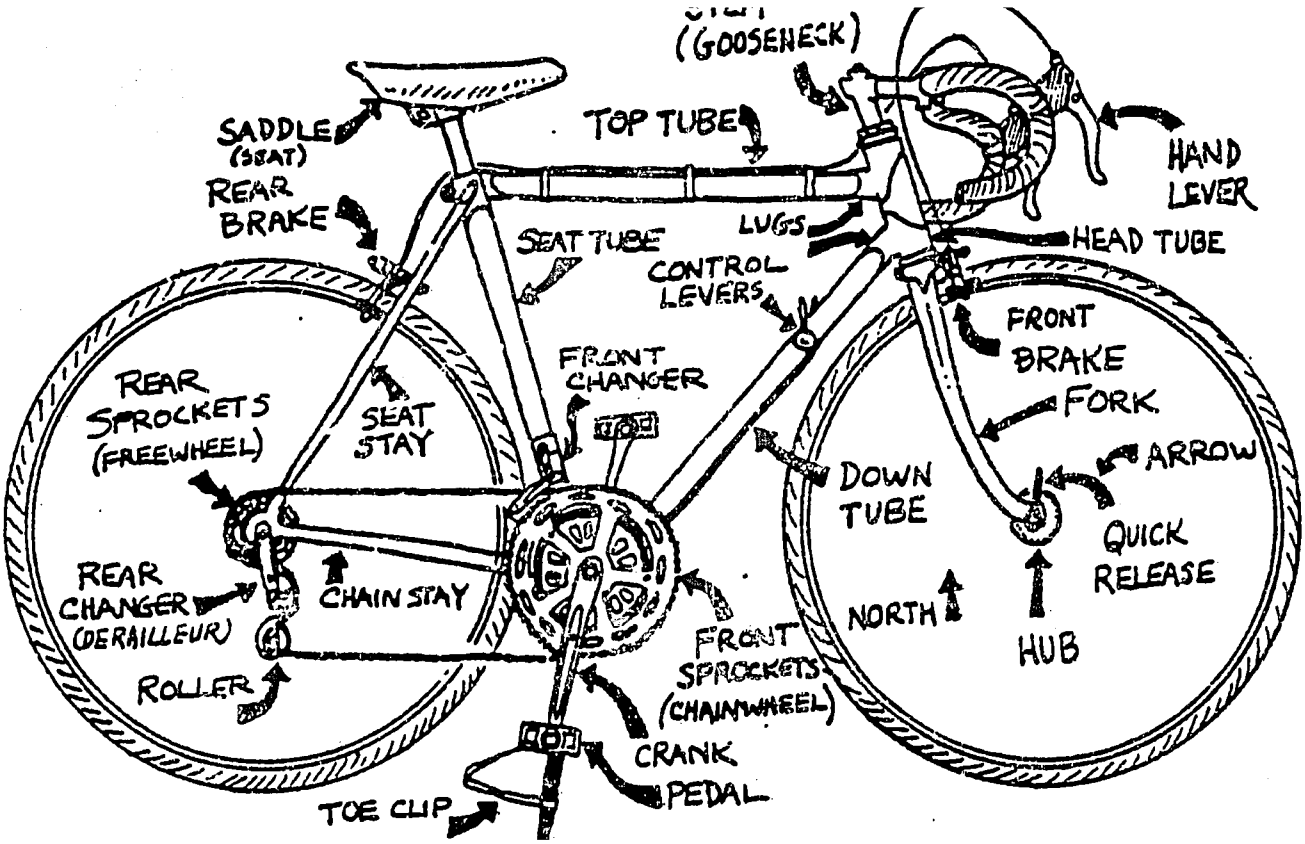

THE ABOVE ILLUSTRATION IS THAT OF A 10-SPEED BICYCLE, WHICH IS THE MOST COMPLEX TYPE.

OTHER TYPES, SUCH AS SINGLE AND THREE-SPEED, DO NOT HAVE MULTIPLE FRONT SPROCKETS AND DERAILLEUR.

STATIONARY DYNOPOD PLANS

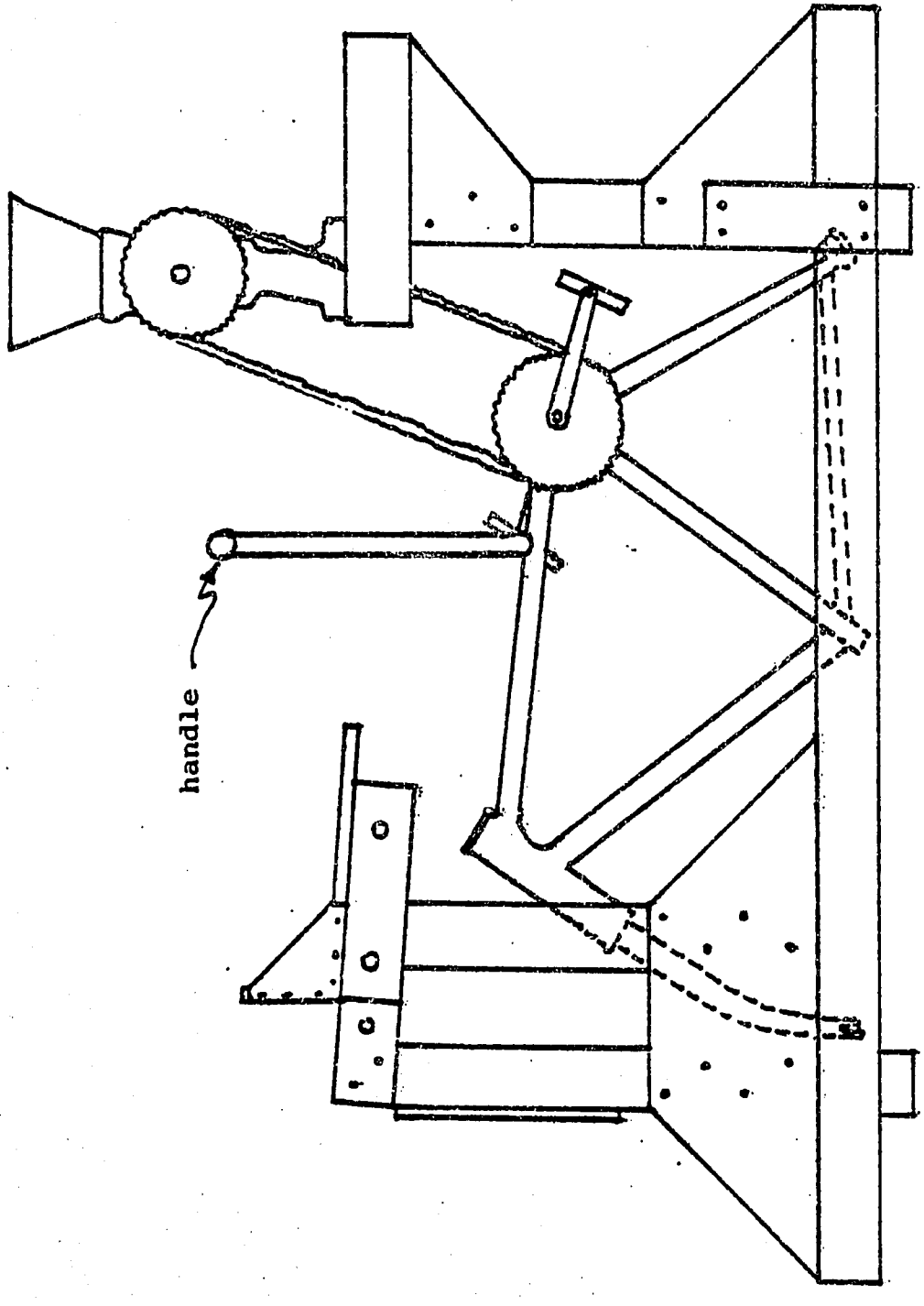

Stationary Dynopod Plans, continued

End View of the Dynopod

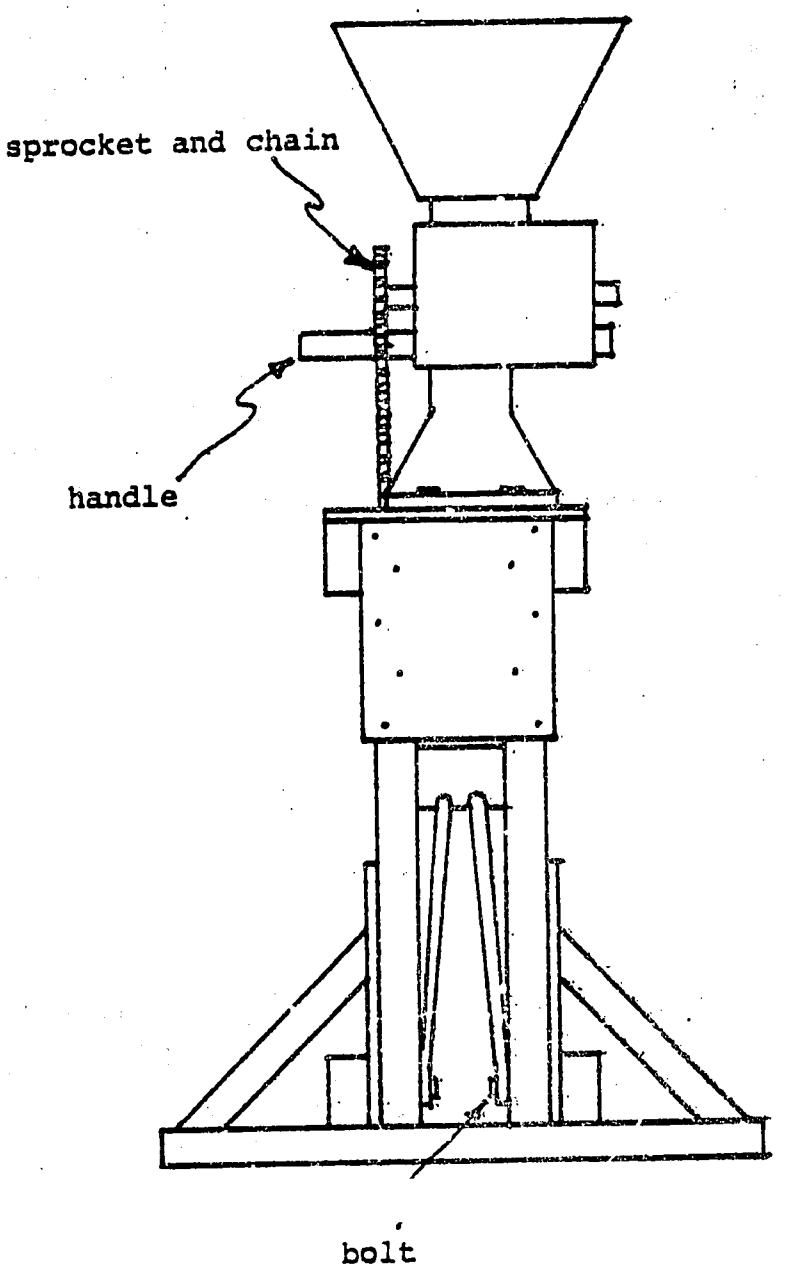

The above view is shown from the grinder end of the dynopod. For clarity *only*, the chain stays are illustrated in this view.

THE INJECTION: A CASE STUDY IN CROSS-CULTURAL HEALTH CARE

Adapted from L. Goldman, *Perspectives of Balance: A Study of Health Traditions in Iluman, Ecuador.*

The following components comprise a packet to be used during *Session 7* : Health and Nutrition in a Cross-Cultural Context: Traditional Health Systems.

A. A short, descriptive critical incident, to be read before the role-play exercise.

B. An instruction sheet.

C. Role characterizations, to be used for facilitating the role-play exercise.

D. A scenario describing the progression of the role-play to be used before beginning the exercise.

E. Questions for study and discussion, for use after the exercise.

Procedure

1. The description (*The Injection: A Critical Incident*) is distributed to the Trainees.

2. When the Trainees have formed groups of five or six (the five will play the characters in the study, and if there is a sixth person, he or she will serve as observer/recorder), the *Characterizations* are distributed. Each Trainee chooses a character to role-play, and, before the exercise, reads only the characterization pertaining to that role.

3. When Trainees are familiar with the role each will play, they are directed to read the explanation of the role-play progression (The *Scenario*).

4. The Trainees role-play the incident.

5. When the exercise has been completed, the Trainees discuss the questions that have been provided to them (*Questions for Study and Discussion*).

6. A recorder makes notes of strategies presented to address Question #2. When the groups all join, the recorder presents the group's strategies.

7. In a large group, the role-play is re-enacted, by volunteers from each small group, based upon the strategies just discussed.

8. The Trainees discuss the incident, with a focus on perceptions of the PCV's role in health and nutrition extension.

9. The Trainees are given the study questions to answer in written form, for later evaluation by the Trainer.

Note: It is helpful if all materials to be used in the small groups are put on 4" x 6" cards, placed in a manila envelope, and given to the group recorder. An instruction manual should also be included in the packet.

A. *The Injection: A Critical Incident*

The baby was sick, Juana said, and only coughed and wheezed, it seemed, not even taking the breast sometimes. She had a little fever, and now the six-month old child was starting to look old, in that wizened and pinched way that often announces extreme dehydration and then death. It was with fear -- and a kind of desperate hope --that Juana carried the baby to the health clinic so that the white doctor could see her, and perhaps cure her of the illness. Juana's husband maintained that the child suffered from fright -- her soul had been robbed by a spirit demon when she fell from the hammock -- and now the only remedy lay in curing the fright, not the cough. He was adamant; after losing six other children, he would allow the white doctors no hand in killing another. Only by calling the soul back and performing the traditional cure at the house of a village healer could the child be saved. Still, Juana trusted the *gringa* from the Peace Corps and agreed to go to the clinic at the base of the hill.

After listening to the baby's lung with a stethoscope, the white doctor explained that the child was suffering from bronchial pneumonia, complicated by incipient malnutrition brought on by dehydration. She needed injections; otherwise, she would probably die. Furthermore, if she did not take nourishment soon, he recommended hospitalization so that she could receive intravenous feeding. There was no real choice, he said, either injections of penicillin or a worsening of the condition -- even death.

Juana was fearful of her husband's reaction, but even more afraid of her child's possible death. She agreed to the shots, and the baby received the first one. It was arranged that the nurse would buy the remainder of the medicine and sell it to Juana, who would come every day with the baby, starting the next day.

The first shot was the last. Juana's husband would have none of it. When he heard the news of the visit to the clinic and the injection, his jaw tightened and his eyes became hard: No! The child will receive no more injections. It is known that they kill babies with those needles. She suffers from fright, and we will take her to a wise man -- one who brings the soul back; white medicine is no good for this kind of sickness.

He thanked the *gringa* and told her that although he appreciated the help, injections were not acceptable, at least not for babies. If there were something else she could do, then perhaps she could help the child, and keep her from the sure death that would follow if the baby were hospitalized.

B. *Instructions for the Role-play Exercise: The Injection: A Critical Incident* (to be included in each group's packet)

There are five roles in this exercise: the mother, the father, the nurse, the doctor, and the Peace Corps Volunteer. Each person in the group should choose a character to play *before* distributing the role characterization cards. When the cards are distributed, you should only read the one that pertains to your role.

If there are more than five people in your group, the extra person will serve as an observer to the role-play, and as group recorder.

If there are five people in the group, choose one as recorder to serve after the role-play.

After reading the individual characterizations, everyone in the group should read the card marked *Scenario* to become familiar with the action of the role-play.

Do the role-play exercise. Try to become the character you are portraying, and avoid breaking out of the role during the exercise.

Discuss the questions that appear on the card *Questions for Study and Discussion*, and have the recorder note the strategies that your group develops to answer the first question: *What options are open to provide appropriate care that would satisfy the child's medical needs in a culturally sensitive manner?*

When you have finished discussion, your group will meet with the others to discuss common strategies and re-enact the role-play.

C. *Role Characterizations*

(Mother)
Juana: My baby is sick, and is coughing and wheezing without rest; now she won't take the breast. Her head flops down, and she can't keep it up, just as if she were still new-born. She is now six months old, and I am afraid she will die. I have already lost six children and only have three left -- all girls. We have tried to pray over her, and give her home cures, but nothing seems to work; so now I must go and see if the white doctor can help. Only I speak no Spanish, and he does not speak my language. I will get the American Peace Corps Volunteer to help; she knows the nurse and doctor at the clinic, and besides, she knows something about medicine. I know my husband will be angry because he is sad about our other children dying; the last two were sons. But I will agree to whatever they recommend at the clinic, even injections, if they will make my child

(Father)
Jose: Yes, my baby is sick, but no white doctor will touch her, or give her an injection. Look what the white doctors did to my other children; they killed my two sons. To one, they gave the medicine, but too late and not enough; and the other they would not permit in the hospital, saying that there was no room. In total, six of our children died, so now we have only three girls left. Those people in the hospitals and clinics, all they care about is money and expensive medicines that we cannot afford. If we (indigenous people) go to them, they treat us like dogs in the street, and say we are dirty and stupid and lazy. We have our own medicine, and maybe our own diseases that the whites do not understand. The baby suffers from fright; she fell from a hammock, and her soul was stolen by a demon when she fell and lay frightened from the fall. Now we must call the soul back, not give her injections. We will take her to the house of a healer, and that is the only cure, not injections that kill, or medicine we cannot afford, or taking her to the hospital where she will die. Even though the Peace Corps Volunteer is our friend, I don't know if she understands how important our customs are.

(The Doctor)
The child is suffering from bronchial pneumonia, a serious illness in itself, that has been worsened by dehydration and the beginning of a kind of malnutrition. She is running a fever and has a lot of congestion in her lungs; in her weakened state, only strong antibiotics will help, and if they do not work immediately, I recommend hospitalization. The quickest and most efficient way of administering antibiotics is by injecting them, and this will have to be done here at the clinic, every day for ten days. The drugs are expensive, but they are the only ways she has a chance of surviving. If the parents will not allow the injections, then what can I do? If treatment is not started today, the child has not much chance of surviving. The decision is up to the parents, but I cannot discuss much with them because the mother speaks no Spanish, and the father will not come to the clinic. I can only relay my opinion through the Peace Corps Volunteer who works in this village and has come with the mother and baby to see me.

(The Nurse)
Mariana: The poor baby! It is so fragile and weak, and looks as if it is going to die. The doctor says that it has pneumonia and is dehydrated; he thinks that the child may die if she does not get the injections of penicillin that are needed. He would like to put her in the hospital, but I know these people in the village, even though I am not from here and speak very little of their language; they will probably not allow the baby to be hospitalized. In this village, as in others in the area, people are suspicious of white medicine. Even though I am black, they associate me with the white people sometimes, although some people trust me and come to me in the clinic. When the doctor comes on Fridays, sometimes no one shows up because they are afraid of him. The mother is very frightened and will see the doctor because she thinks he may have strong medicine. I will buy

the medicine at a pharmacy and charge the mother for each shot when she brings the baby in, but I don't know if she will really follow the doctor's orders for 10 days of injections. The Peace Corps Volunteer knows the family, and that is why she accompanied the mother to the clinic. Maybe she can help.

(The Peace Corps Volunteer)
I am a Peace Corps Volunteer in a small village in the Andes. A woman comes to me with her obviously sick, dehydrated six-month-old child and asks me to accompany her to the clinic down the hill. She is frightened and hesitant about asking my help, and about going to the white doctor. I know that most people in the village use traditional healers, and only go to the doctor or the hospital in an emergency situation. They believe that hospitals are places for dying, not getting well; and that white doctors are to be mistrusted and feared, although their medicine is reputed to be effective sometimes. I occasionally work in the clinic and know the doctor who visits on Fridays, and the nurse who lives there during the week. If I can, I want to help, but only in a way that respects the customs of my friends in the village. At the clinic, I speak with the doctor and nurse, and then tell the mother what they say; later I speak with the father, and explain what the doctor has recommended.

D. *The Scenario*

Please read this summary of the role-play action before beginning the exercise.

The mother speaks with the PCV, and they both go to the local clinic. The doctor examines the child, then speaks with the nurse; they, and the mother and the PCV all talk about what will be done with the child. The child is given the first injection, and the mother, PCV, nurse and doctor all there. Later, the mother and the PCV talk with the father, and tell him of the injection.

E. *Questions for Study and Discussion*

Please discuss these questions after completing the role-play exercise. You should select a recorder to note the strategies your group develops to address Question #1. These strategies will be shared with the other groups later in the session.

1. What options are open to provide appropriate care that would satisfy the child's medical needs in a culturally sensitive manner? (The care would have to be acceptable to the family, and be one that they would follow for the prescribed time.)

2. What are some sources of conflict in the situation, and why do they exist?

3. What do you believe is the appropriate role of the Peace Corps Volunteer in such a situation?

PEACE CORPS VOLUNTEER ROLE PLAY FORMAT: PEDAL POWER

Much of a Peace Corps Volunteer's work centers around working closely with community groups. Rather than take the role of group leader, it is important that the PCV recognize, understand, and assume the role of group facilitator, i.e. one who assists the group in attaining their goals. During some of the following sessions, the Trainees alternate taking the role of "PCV" in their working group. The following instructions should be made available to the Trainees:

Procedures:

1. Determine who in your group will serve as the "PCV" for the specified period. This should be done on a rotational basis (there will be at least 6 time periods when the PCV role-play format will be used).

2. The group should reach consensus on how to accomplish the tasks prescribed by the Trainer. The "PCV" should serve as facilitator by making sure that all members of the group clearly understand what is to take place and what is expected of them. It is also the "PCV's" responsibility to see that any conflicts or problems are resolved, as much as possible by consensus, and to the satisfaction of all.

3. During the work, the "PCV" should see to it that the group maintains direction to accomplish the task in as efficient a manner as possible. He/she should be able to direct the members towards appropriate human and material resources when the need arises. The "PCV" is not "in charge" but rather facilitates the group work process by example and attention to details.

4. At the end of each specified period, there is time set aside for the "PCV" to relate concerns and feelings connected to the role of the Volunteer in a group situation, and for the other group members to evaluate the "PCV's" performance. Among the questions that should be considered are:

   Was the "PCV" a leader or a facilitator? Is there another term that better describes the role assumed?

   How can the "PCV" draw others into the activity without assuming a leadership role? Were people assigned tasks or did they volunteer willingly?

   Were the group members encouraged to participate in all phases of the activity?

   Was the "PCV" concerned more with the task or more with the people?

Was the group encouraged by the "PCV" to make use of the special abilities of certain individuals?

Was the "PCV" able to facilitate the resolution of conflict in the group?

What is the one thing that the "PCV" should work on improving for the next time?

How did the "PCV" and the other participants feel about the roles they assumed?

Attachment III-11-L

SPROCKET RATIO WORKSHEET

Given the data below, design a pedal power system which will operate a grinding wheel at within 5% of 1500 rpm. The maximum size sprocket which can be used has 40 teeth; the smallest has 12 teeth.

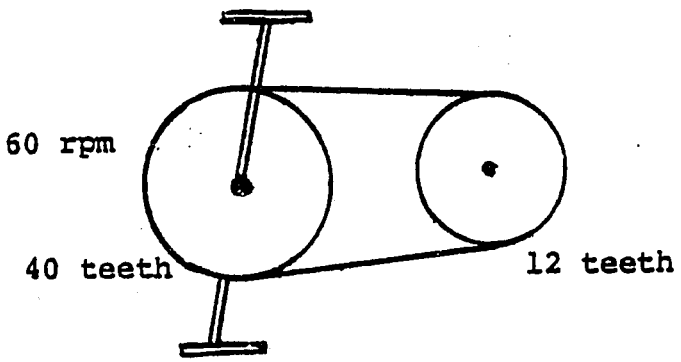

POWER TRANSFER DESIGN OPTION

Construction of a Wooden Pulley

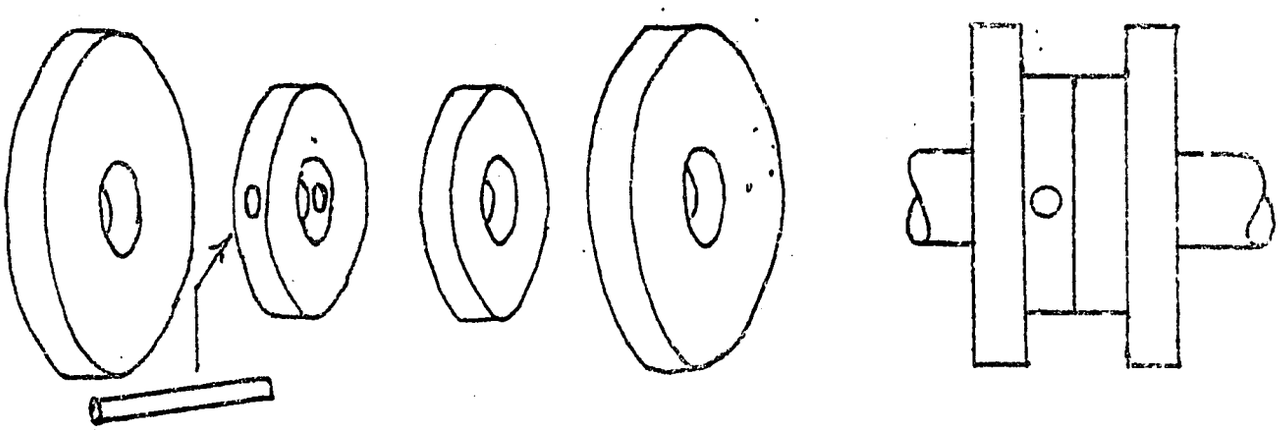

Exploded View Assembled View

A pulley of any dimension can be constructed using minimal tools and either plywood, or boards.

First, determine the diameter needed for the pulley, then cut out enough round disks of that diameter to equal the width of the pulley belt plus ½" to 1".

Cut two disks that are 2" larger in diameter. Now drill holes in the center of each equal to the size of the pulley shaft to be used. This is generally ½" or 5/8". The fit should be snug and care should be taken that the holes are centered and perpendicular with the surface of the disks.

The disks are then nailed and glued together on the shaft in the order as illustrated above. A hole is then drilled through the assembly the size of a 16d nail or equivalent pin as shown in the above diagram. The pin should be driven through so that it locks the pulley in place.

THE CASAMANCE PEDAL GRAIN-GRINDER

By Stuart Brown

Grains, such as rice and millet, are the main food staples in Senegal, West Africa. The preparation of grain for cooking is traditionally a woman's task, and one which occupies much of her time. The heavy wooden mortar and pestle is still by far the commonest tool for getting the job done. Rice must be pounded to remove the hulls before cooking, millet dehulled, then further broken down into meal. Pounding corn into meal may occupy four hours of a woman's day, every day. This is time which could be much better spent in another traditional woman's activity: gardening. She could be raising a greater variety of food both for her family and for sale in the marketplace. She could devote more time to her children and simply have a less back-breaking day.

Motor-powered grinding mills have been tried, but they are not always the answer. Motors need fuel, parts and skilled maintenance and these things are often unavailable in the African village. When fuel is expensive and must be brought from a town 90 miles distant and spare parts are several months back-ordered from overseas suppliers, even a relatively modest motor-powered machine quickly becomes more of a burden than a help. The initial purchase cost of an imported machine is also a staggering obstacle to the peasant farmer. Well-meaning international development agencies have financed a great number of grain mills, yet, in spite of this initial assistance, many villagers have subsequently found themselves swamped by the logistic impracticalities of maintenance and repair. Imported machines are to be seen throughout the countryside, rusting away for lack of a spare part, tools for repair, or perhaps because the villagers finally abandoned them because they were too expensive to run.

When forester and charcoal production specialist Ed Karch and I were working together in the Casamance region of Senegal as Peace Corps Volunteers in the winter of 1978, we developed a machine which both grinds grain and stays within the resources of the Senegalese villager. We limited ourselves to locally available materials and skills, so that the machine could be built and repaired on a local level and without reliance on many expensive imports. We took advantage of the opportunity to cannibalize old automobiles for the more sophisticated parts of the machine. Scrap metal, wood and bicycle parts made up the rest. Bicycles are plentiful in Southern Senegal, as are well-muscled village cyclists, so we decided to opt for pedal power.

The machine can be constructed in a fairly well-equipped garage, such as one finds in a large town. Arc and gas welding units are called for, although the work could conceivably be done with the arc alone. The mechanism consists of two car wheel rims (see photo) filled with very hard concrete, one wheel fixed, the other rotating. The wheels are mounted on the end of an upright-standing car differential which is driven by human muscle power through a system of pedals, chain and sprockets. The grain is ground by passing between the two concrete-filled wheels. The gap between the wheels is variable by means of a system of threaded adjustors which allows the machine to accept different grains and grind them to different finenesses. The following text and illustrations detail the construction of the grinder.

CONSTRUCTION

1. In looking for a used differential, it is important to find one with all the gears and shafts intact. A certain amount of play in an old differential is acceptable, as the stresses it will be subjected to are nowhere as great as those it experienced as part of an automobile. It is important simply that the gears and bearings be in good enough condition to move freely and without resistance. Pay attention to the type of mounting for the driveshaft, as it is essential to find a differential with a suitable flange for mounting the sprocket and flywheel assembly (see Fig. #1). Some differentials (Peugot 404) are made to accept a splined, unflanged driveshaft end, and these are not suitable. English Ford, Opel and Datsun are a few examples of cars with ideal driveshafts.

2. Find two good used car wheels, one somewhat greater in diameter than the other. Stand the differential upright and bolt the smaller wheel to the upper end. If the differential has an oil breather valve, stand it with the valve end up to avoid unnecessary leaking of oil. If the smaller wheel doesn't have lug-holes which agree with those on the axle flange, torch or drill new ones, making sure that the wheel is well centered on the axle. Take the larger wheel and weld four sections of steel pipe across the rims, equidistant from each other and exactly parallel to the centerline of the axle (see Fig. #2). With a torch, cut out the center area of the upper wheel where the lug-holes are located. Also, cut small pinholes around the remaining metal surface of the wheel to accept reinforcing wires for the concrete. Cut pinholes into the sides of the lower rim for the same purpose.

3. With the lower rim bolted in place and the upper rim resting centered on top of it, note the location of the pipes and weld sections of small I-beam or angle iron onto the differential housing at a 90 degree angle, taking care that they don't touch the bottom of the lower wheel, that they are long enough to extend beyond the centerlines of the pipes, and that they are correctly located directly below the pipes (see Fig. #3). 22mm threaded rod was used for the adjustment system. You will need two 1-meter rods, each cut in half, and 16 nuts. Slip the cut 50cm. rod sections through the pipes, always making sure that the upper wheel is centered on the axle and over the I-beams. With a piece of chalk, mark the locations of the rods where they contact the I-beams and, with a torch, cut out the marked circles. Thread two nuts onto each rod, one each on the upper and lower surfaces of each I-beam, and two more, one each on the upper and lower end of each of the four steel pipes welded onto the upper rim. The 16 nuts are now in place. With the upper wheel lined up as nearly parallel as possible to the lower one, finger-tighten all 16 of the nuts and then weld the 8 lower nuts permanently in place on the I-beams. This is to ensure that the threaded rods will be correctly aligned and that the upper wheel will move smoothly up and down for adjustment and removal.

4. To make the flywheel, take a one-speed rear bicycle wheel assembly complete with spokes, hub and ratchet-sprocket (axle not

needed) and lace wire back and forth between the spokes. Lay the wheel on its side and fill it with cement, taking care not to fill the axle hole or to coat the threads which accept the ratchet-sprocket. When the cement is semi-hard, shave it down to its desired shape with a machete. Make a flat metal plate of at least 3mm. thickness and drill holes which correspond with the holes in the flange where the driveshaft once bolted to the differential. Weld a 10cm. length of 10mm. threaded rod perpendicular to the center of the plate. Make a sleeve from a short (2cm.) section of wide pipe--pipe that is wide enough to fit just inside the outer edge of the stationary part of the ratchet-sprocket (see Fig. 4). Weld this sleeve onto the side of the ratchet-sprocket, taking care to weld it to the side which faces away from the wheel when the sprocket is threaded in place. Weld the other end of the sleeve onto the metal plate, with the 10mm. rod carefully centered. Thread this sub-assembly onto the bicycle wheel hub with the 10mm. rod passing through the axle hole and secured on both sides of the hub with flat washers and double nuts. Then, bolt the entire sprocket/flywheel assembly onto the driveshaft flange of the differential with 4 suitable bolts and lockwashers.

5. Construct the frame from suitably heavy wood. Scrap metal, if more available, can also be used. The wooden frame is bolted together with 12mm. threaded rod, nuts and washers throughout. The dimensions are not critical, but it is important to make sure that the frame is broad and sturdy enough to support the high center of gravity of the concrete-filled wheels. It is also important to bolt the up-ended differential assembly onto the bottom cross-piece of the frame so that the ratchet-sprocket and the pedal sprocket are correctly aligned and the chain doesn't twist. Also, bolt a wooden cross-member onto the frame and onto the shock absorber bracket on the differential to keep the differential from turning on its own axis (see Fig. 5). If there is no shock bracket on the differential, weld up a mounting plate for the cross-member to bolt to. The seat and handlebar dimensions are copied from an existing bicycle. The seat can be made from wood, which may be cheaper and sturdier than available bike seats. The seat should have a metal-pipe stem and the wooden suport design should allow for height adjustment. The pedal-shaft and sprocket can be a Peugot mobylette pedal-starting unit, which gives a ratio of 30:16 when coupled to the ratchet-sprocket from a one-speed Peugot bicycle. This ratio has been proven to be good for grain grinding, but this will of course vary with the internal gearing of the differential you select. Cut the Peugot shaft down to the desired length, cut a new keyway on the shortened end and bolt on bicycle cranks and pedals.

6. A wooden bearing block may be used if a ball-bearing system is not available. Hardwoods such as teak or mahogany are recommended. Drill the wooden block to a size slightly larger than the diameter of the pedal-shaft. Boil the block in used crankcase oil for an hour or more and leave it to cool in the oil overnight. The oil penetrates the wood to provide lubrication for longer life. If the wood shrinks in the oil bath, ream or rebore the hole to fit. Green wood may be used for the bearing block because the hot oil will force the moisture out. Simply replace the bearing when it wears out. It would probably be a good idea to make several at a (see Fig.6)

time. The chain consists of slightly less than two lengths of ordinary bicycle chain. A block of tractor-tire rubber nailed onto the wooden handlebar support takes the bounce out of the chain and keeps it aligned. Remove links from the chain as it stretches and replace it when the rollers no longer sit snugly between the sprocket teeth.

7. The concrete for the grinding wheels is made from the same formula as that used for floors in office buildings and is designed to give maximum abrasion-resistance qualities. The mix consists of: 1 part cement
1 part clean sand
2 parts fine crushed gravel
40% of the weight of the cement in weight of water (or as little water as is needed just to make the paste workable)

Lace wire through the pinholes torched into the upper and lower wheels. Put a tin can roughly equal to the center area cut out of the upper wheel in the center of that wheel, which is on a flat surface. Pour the concrete into the lower wheel (which is bolted in place on the differential), and form a cone-shape by turning the wheel while holding a fixed, inclined trowel against it. Approximate a mating cone-shape in concrete poured into the underside of the upper wheel, with the tin can at its center. (see Fig. 7) The concrete-filled wheels are kept out of the sun, covered with wet sacks and doused with water at least twice daily. This is continued for TEN DAYS. This yields an extremely hard concrete. Pry the tin can out from the center of the upper wheel and mount the two wheels in place on the machine. Grind them to a perfectly mating shape by running light sand and lots of water through the machine with the adjustment nuts slightly tight. This may take several hours of work. Cut mill grooves (see Fig. 8) approximately 7mm. deep into the stones with a chisel. Make sure that their direction is correct with regard to the direction of rotation of the wheel and that they extend across no more than the inner half of the radius of the stones, or they will alow grain to escape unground. Recut the grooves as the stones wear down, and chisel out and completely recast the stones when they eventually wear out.

8. Make a system for catching the flour falling from the stones using a large enamel bowl and a spout made from roofing tin (see photo). You can devise a chain-guard to keep flour from landing on the chain, and a wind-guard can be made by wrapping a sheet of tin around the entire top end of the machine, if wind blowing away the flour proves to be a problem. Use a bottomless laundry tub, as the photo shows, as a hopper to hold the grain feeding down into the stones.

ABOUT GRINDING

We loaded this grinder into the back of a pickup truck and visited quite a few villages to test it out on the various grains people work with. Here is what we learned:

MILLET: Millet can be easily ground, provided that the hulls have been previously removed by pounding once in a mortar. Millet

grains are so small that it is impossible to set the gap between the stones accurately enough to remove only the hulls.

CORN: Corn that has been soaked overnight in water and then allowed to dry in the sun can be ground. Unsoaked corn is simply too hard.

RICE: Rice can be hulled, but with a high incidence of broken grains.

PEANUTS: Can be hulled with a low incidence of breaks with careful adjustment of the gap.

SORGHUM: Sorghum that had been de-hulled and soaked was tried, and it ground quite well, although with some sticking to the wheels.

PALM NUTS: Palm nuts, much to our surprise, can be cracked (the hard outer shells) with a fairly wide gap on the adjustment and a great deal of shuddering and noise on the part of the machine.

If you should have any questions about the construction of this machine, feel free to contact: Stuart Brown
c/o Clark
110 West End Ave. Apt. 8-E
New York, N.Y. 10023
U.S.A.

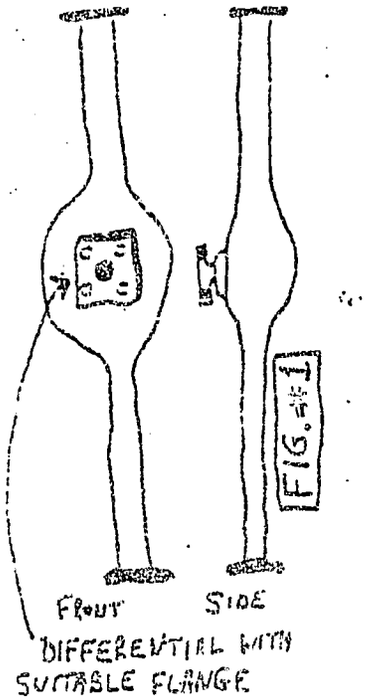

FIG. #1

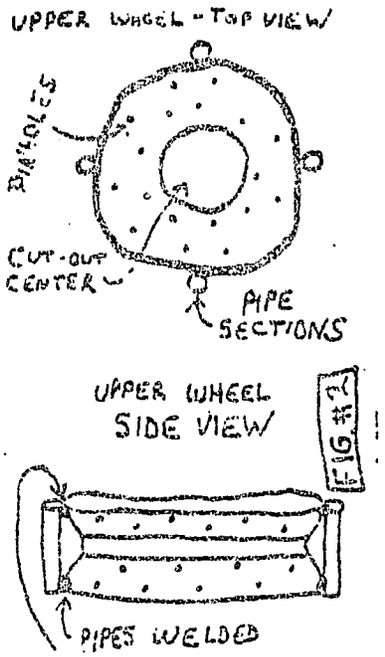

FIG. #2

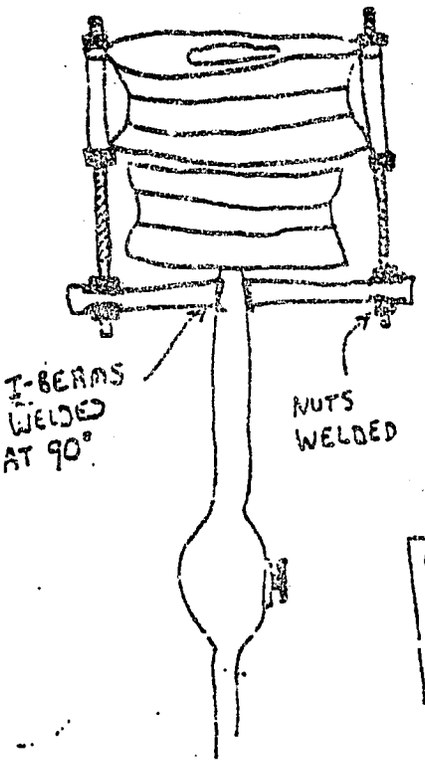

FIG. #3

LOCATION OF I-BEAMS AND THREADED RODS

CASAMANCE PEDAL GRAIN GRINDER

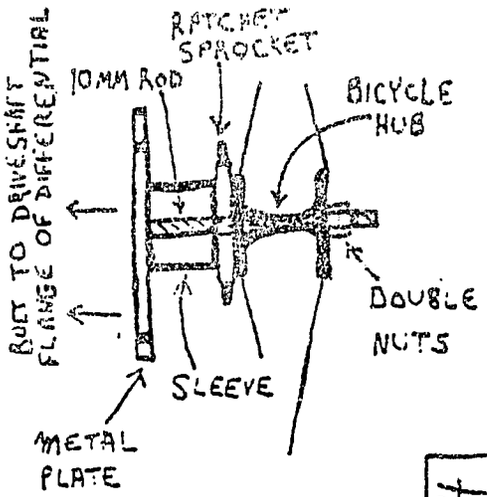

FIG. #4

CROSS SECTIONAL CUT-AWAY OF FLYWHEEL/RATCHET-SPROCKET ASSEMBLY

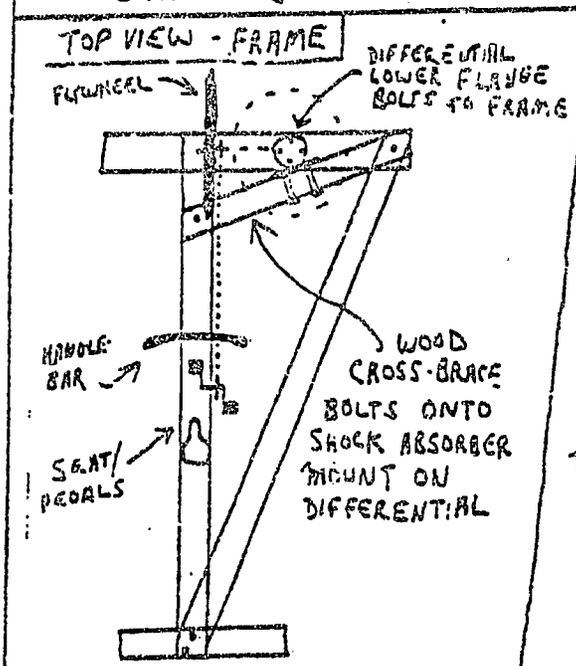

FIG. #5

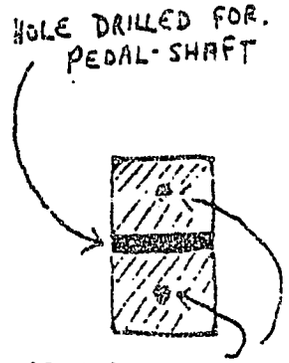

WOOD BEARING BLOCK FRONT VIEW

FIG. #6

FIG. #7

CUT-AWAY SHOWING SHAPE OF CONCRETE (BLACK AREA) IN WHEELS

FIG. #8 CUTTING MILL GROOVES

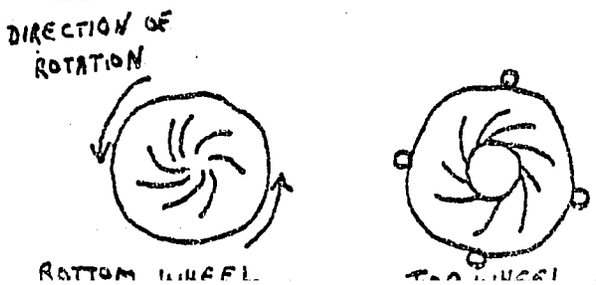

HAND-POWERED GRAIN MILL

ABSTRACT

This hand-powered grinder will grind corn, wheat or other grain coarse or fine. It is simple in design and easily built by a carpenter. being made almost entrely of plain one inch lumber.

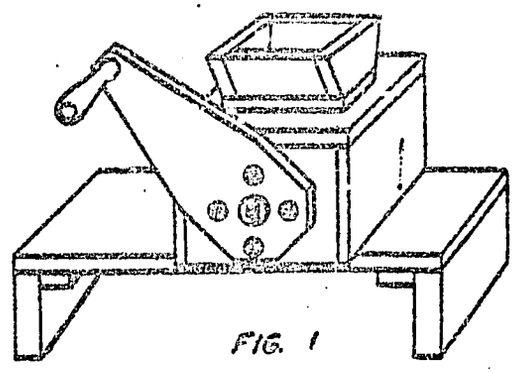

FIG. 1

TOOLS AND MATERIALS

Tools -
Hammer
Hand cross cut saw
Auger brace and 1/4, 1/2 and 7/8 inch auger bits.
Round file
Coping saw or key hole saw
Breast drill and 1/8" twist drill
One flat file
One three corner file
1/2" x 13" die and die handle
5/16" die
Wood chisel
Half round wood file
Tin shears
Screw driver

Materials -
12 feet of 1" x 6" seasoned sheathing lumber
2 feet 1" x 10" sheathing lumber
2 feet 2" x 8" framing lumber
3 feet 2" x 4" framing lumber
1 piece 1/2" x 14" cold rolled steel
12 - 1 1/2" x 8" flat head wood screws
3 - 1/2" steel washers
4 - 1" x 4" carriage bolts
1 - 1/2" wing nut
1 - 3/8" x 5" carriage bolt
2 cast iron burrs. (The cast iron burrs are available from Booher Equipment Company, 3627 Devon Drive S. E., Warren, Ohio, for about $.50 plus postage.

DETAILS

Through the following discussion 1" lumber refers to the standard board thickness for surfaced sheathing lumber in the United States. It actually measures only about three quarters of an inch in thickness. All dimensions are in inches. Lumber used should be flat and well seasoned. The numbers in the next section refer to part numbers shown in Figure 2 and subsequent detailed part sketches.

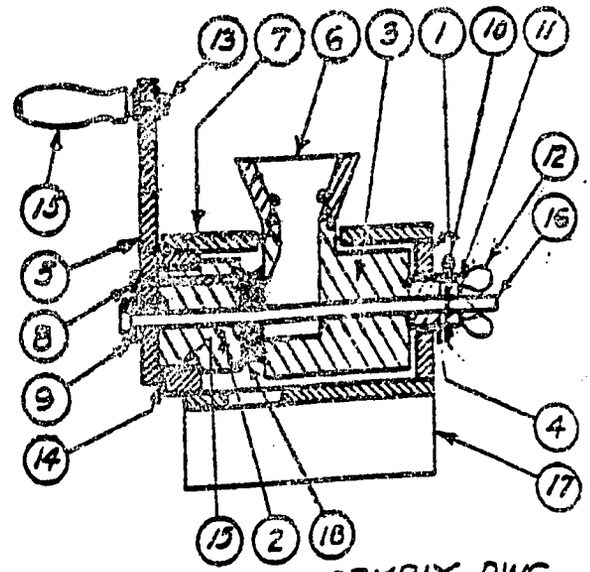

FIG. 2. ASSEMBLY DWG.

1. Grinder Body - make of 1" x 6" pine or hard wood lumber. Circular hole can be cut with coping saw or jig saw but for a better and quicker way to cut see Notes 1 and 2, Figures 3 and 4.

2. Rotor - See Note 2. Take care to bore the 1/2" holes thru each part where required accurately and at right angles to the surface of the part. If

when placed on the assembly post, it does not lay flat to the assembly post surface marked "A" in Figure 3 or against an adjacent part because the hole is not bored straight, remove it from the assembly post and use a round file in the hole carefully until it will lay flat. Use a few spots of glue between parts. Be careful in nailing so nails will not interfere with boring the 1/4" holes later. Keep the nails within 1" of the center post. 1 1/2" finishing nails are about right.

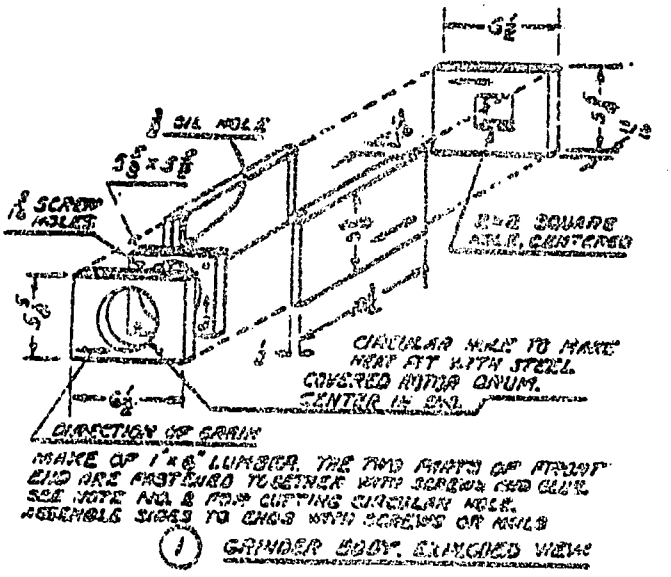

1 GRINDER BODY EXPLODED VIEW

It is a help in getting the metal band snugly on the rotor drum to form the 3/8" lip on one end first, then bend the band around some round object that is about 3" in diameter. Next put it on the rotor drum with the one lip engaged in the slot. Use strong twine or flexible wire to pull band snugly around drum and mark position of the second lip. Remove from rotor, form the second lip and cut off excess. The band may need to be formed a little with the fingers. It should now fit snugly.

3. Stationary Burr Holder - In boring 1/2" holes and assembling follow the instructions given under (2). Assemble the parts using a few spots of glue and nails. 1 1/2" finishing nails are about right.

4. Follow instructions under (2) Rotor for assembling parts of the thrust block.

5. The 1/4" holes can best be located by placing the rotor and crank all on the assembly post. With bolts in place thru rotor, mark location for holes on crank by tapping with a hammer. Oil hole in the crank is bored to reach the 1/2" hole. This will supply oil to the steel shaft.

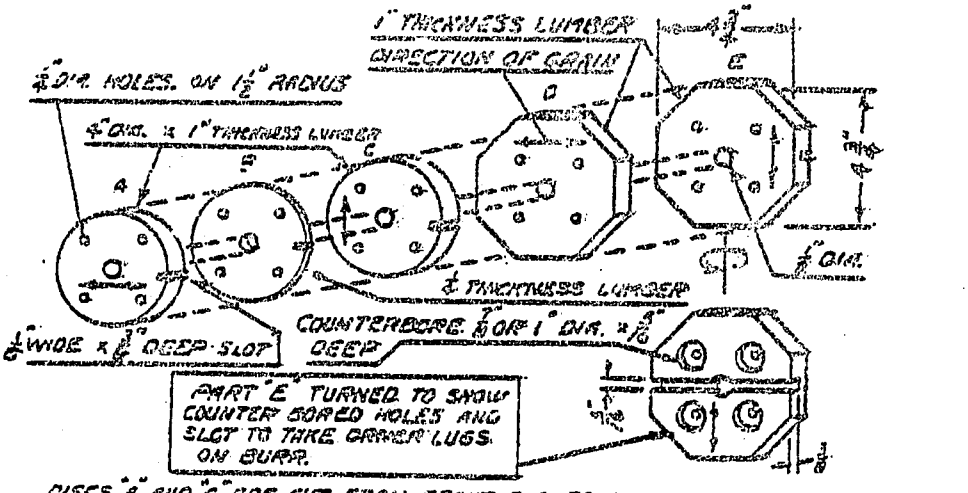

DISCS "A" AND "C" ARE CUT FROM FRONT END BOARDS OF GRINDER BODY USING CIRCLE CUTTER. SEE FIG. 4. CUT DISC "B" FROM PLYWOOD OR PLAIN THICK LUMBER. BORE DIA. HOLES IN CENTER OF EACH PIECE. THEN STARTING WITH PART "E", PLACE OVER ASSEMBLING POST WITH SLOT DOWN. ASSEMBLE OTHER PARTS AS SHOWN. USE NAILS AND GLUE. MAKE COUNTERBORES AND HOLES AFTER ASSEMBLING. PUT THE FOUR BOLTS IN HOLES WITH HEADS IN COUNTER-BORES. ATTACH BURR WITH x 8 WOOD SCREWS.

2 EXPLODED VIEW OF ROTOR

Best Available Document

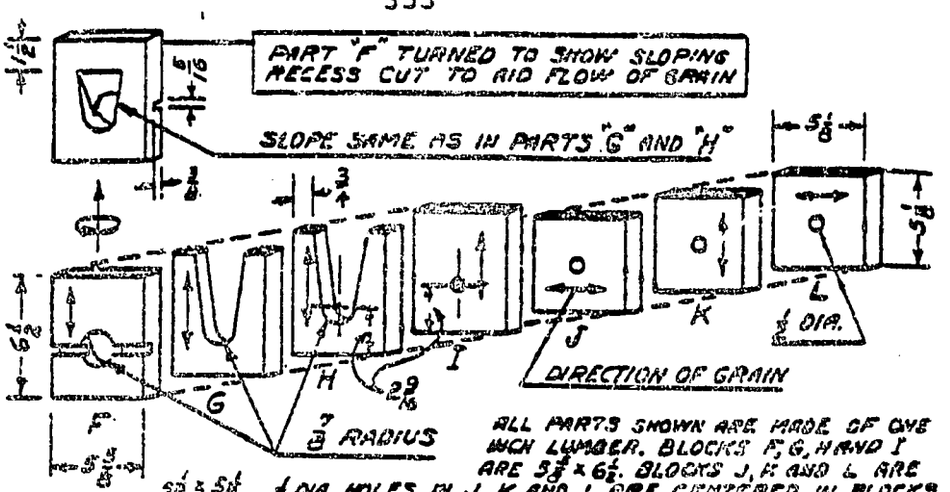

(3) EXPLODED VIEW OF STATIONARY BURR HOLDER.

6. Attach hopper to top of stationary burr holder with screws. See Figure 2.

7. Cover

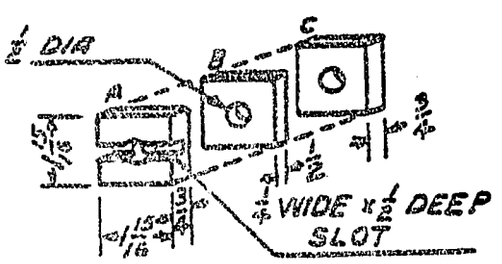

AFTER BORING HOLES AND CUTTING SLOT, ASSEMBLE PARTS A, B AND C USING SMALL NAILS AND GLUE. TOTAL THICKNESS OF A, B AND C IS 2"

(4) EXPLODED VIEW OF THRUST BLOCK.

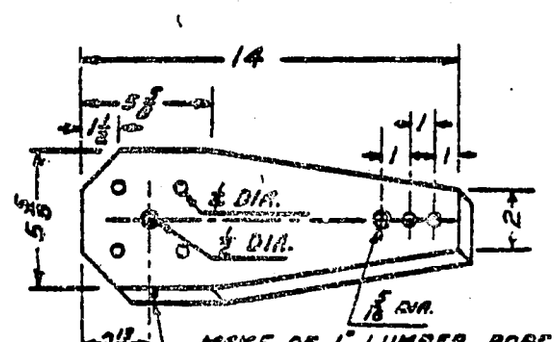

MAKE OF 1" LUMBER. BORE 1/4" HOLES TO LINE UP WITH HOLES IN ROTOR.

(5) CRANK

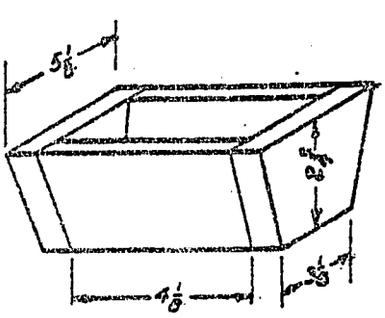

MAKE OF 1" LUMBER

(6) HOPPER

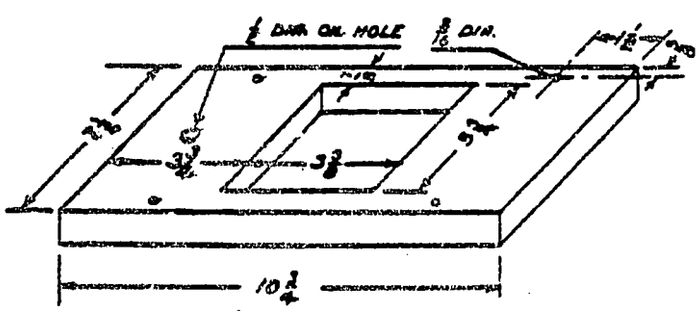

MAKE OF 1" LUMBER. LOCATE OIL HOLE TO LINE UP WITH OIL HOLE IN GRINDER BODY

(7) COVER

Best Available Document

8. Four 1/4" x 4 1/2" carriage bolts with nuts and 8 washers.

9. Two steel washers for 1/2" diameter bolts.

10. Two 1/8" diameter x 2" cotter key. If a larger diameter cotter key is used, drill the hole to suit. The hole should not in any case be more than 5/32".

11. Three steel washers for 1/2" bolt.

12. One 1/2" winged nut.

13. One 5/16" diameter carriage bolt threaded 1 1/2". File square shank under head to roundness. Length 4 1/2".

14. Clearance Block - The purpose of the clearance block is to keep the crank from rubbing the front of the grinder. Locate the clearance blocks at even quarters around circular opening in front of grinder body.

15. Rotor Drum Band - In making this part and attaching it to rotor read the discussion under Rotor (2).

16. Steel Shaft - Threading is U.S. standard, 1/2" x 13 threads per inch.

17. Grinder Stand.

18. Two cast iron burrs. See materials.

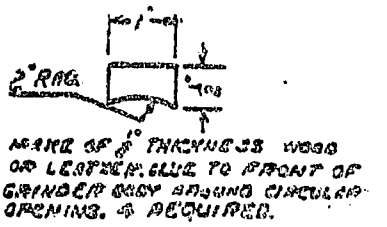

(14) CLEARANCE BLOCKS

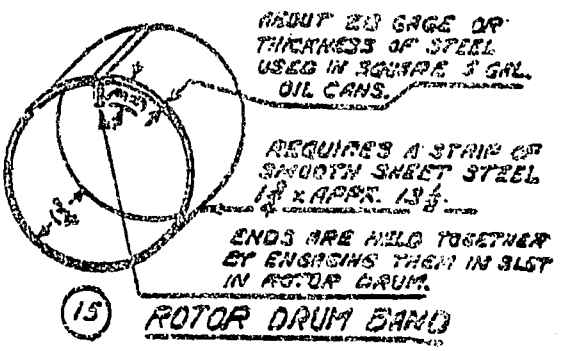

(15) ROTOR DRUM BAND

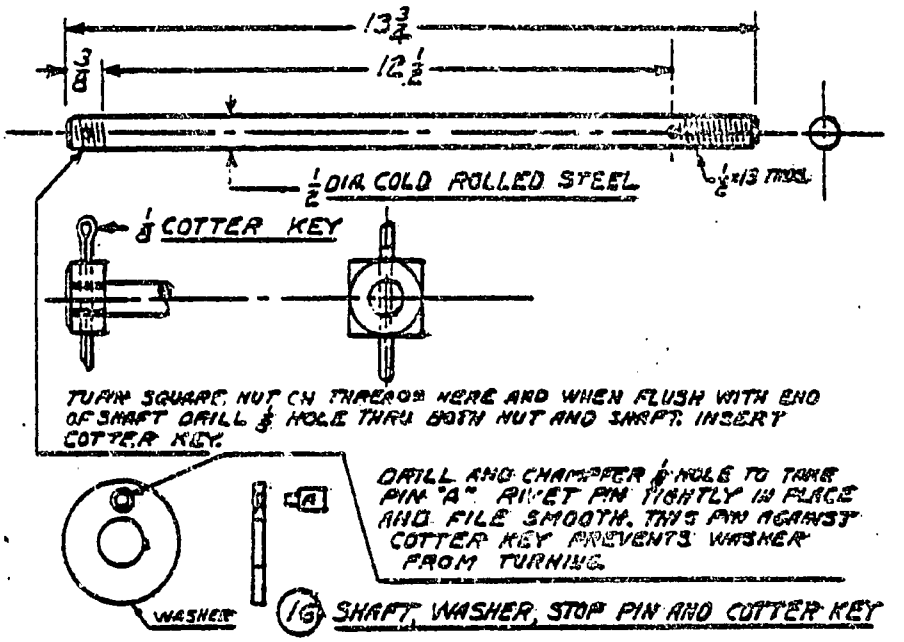

(16) SHAFT, WASHER, STOP PIN AND COTTER KEY

FINAL ASSEMBLING

After all parts are completed the next step is to fully assemble the mill. The rotor with burr attached is placed in its position in the circular opening. Attach the crank. Next put the stationary burr holder in position and insert the steel shaft thru both parts. Put

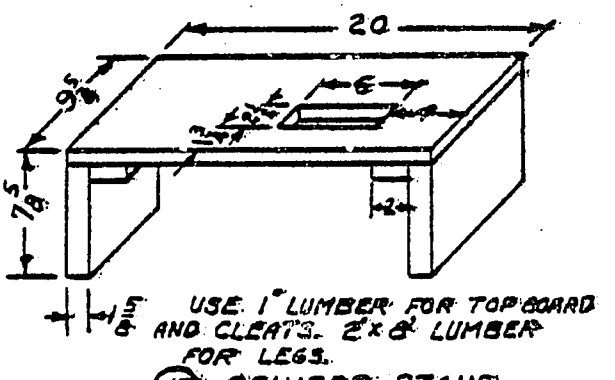

(17) GRINDER STAND

the thrust block in place, insert the cotter key, put on steel washer and run up the winged nut. In making the final adjustment it may be necessary to add one or more steel washers between thrust block and burr holder or to shorten the thrust block. When the winged nut is tight, there should be a little play between the cotter key and the bottom of the slot in thrust block.

Before putting on the cover turn the rotor and observe the burrs carefully. They should remain flat to each other when rotor is turned. If there is an opening which travels around as the rotor turns, a shim is needed under the burr on the rotor. Mark the place and note thickness of shim required. If the opening remains stationary a shim is needed under the burr on the burr holder. Remove the necessary part and add a shim. Of course, both burrs may need shims. A little glue under the shims makes a permanent job.

NOTES -

The purpose of the following is to facilitate and speed up the job of making the mills. It is assumed the mills will be made in a carpenter shop as a business. The notes along with Figures 3 and 4 describe two devices that will be found very useful in shops making these mills.

NOTE 1 - See Figure 3. The use of the assembly post is described under (2) and (3). In constructing the assembly post, care should be taken to make it very solid and strong and the steel post must be square with the surface marked "A" in Figure 3.. A good way is to build the entire wood part of the device "C" and "D" before boring the holes for the steel post. When ready to bore these holes, bore thru "A" first, then push the bar thru to "B" and testing carefully with a square move top of bar until it tests square both ways then strike the bar on its top end to mark position of the auger hole in "B". Last, put on "C" and "D".

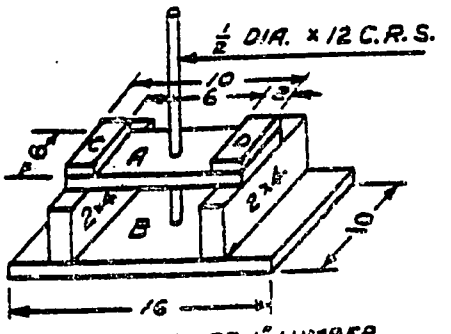

ALL WOOD PARTS ARE 1" LUMBER EXCEPTING THE 2 PARTS MARKED 2x4

FIG. 3. ASSEMBLY POST

NOTE 2 - See Figure 4. The purpose of this device is to cut the circular discs out of the end boards of the grinder body. Test each on the assembly post to be sure the holes are square thru these members. Use a round file if the member does not lay flat on "A" of the assembly post. Place the pieces one at a time on the rod of the disc cutter. Remove the steel rod from the assembly post and pass the steel rod of the disc cutter thru both holes of the

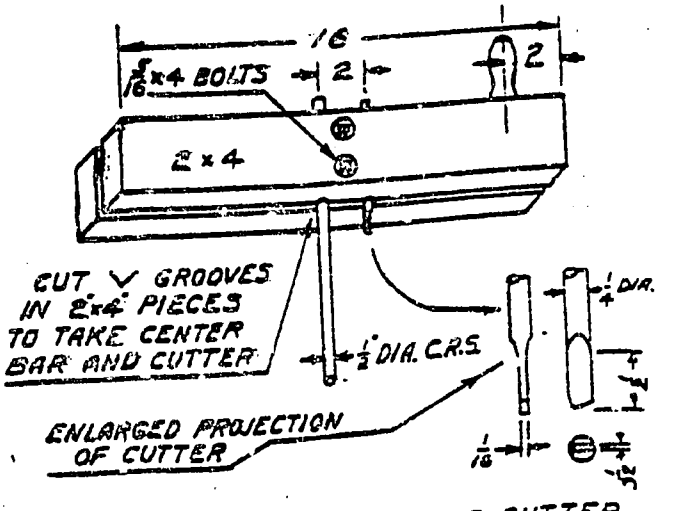

FIG. 4 DISC CUTTER

assembly device. The assembly device with disc cutter in place should now be held in a bench vise or fastened to a wall so the shaft is horizontal and at a convenient height for turning. Turn the crank and exert a gentle pressure to bring the cutter into play.

The steel cutter should be of tool steel. A six inch length of drill rod is excellent. If this is not available, a screw driver with approximately a 1/4" diameter shank can be shaped up with a file to do the job. In operating the disc cutter cut only half way thru the member then reverse and complete from other side.

For greater strength the cutter can be made more then 1/16" in thickness. This will make the discs that compose the rotor drum fit too loosely even after the steel band is on but the difficulty is easily corrected by giving the drum several turns of heavy wrapping paper before the steel band is applied. The paper should be glued to the drum.

EVALUATION

To date the grinder has not been field tested. Shop tests have been successful.

Material From - Designed by W. B. Booher
3627 Devon Drive, Warren, Ohio.

The CHILD-to-Child Program

All over the world, in rural and poor communities, those who often spend the most time caring for babies and small children are their older brothers and sisters. These "child-minders" not only play with their younger brothers and sisters, but also carry, bathe, change and often feed them.

If these children can learn more about how to protect and improve the health of their younger brothers and sisters, they can play an important part in their well-being.

Is it possible to interest and teach school-aged children to take more responsibility as "junior health promoters," assisting in the health care of younger children?

Absolutely! We have already tried this in Ajoya, Sinaloa, Mexico as a pilot trial for the CHILD-to-Child Program.

The CHILD-to-Child Program was originally the idea of David Morley, author of Pediatric Priorities in Developing Countries. Recognized by the World Health Organization and UNICEF, the program will be a part of the International Year of the Child, 1979.

Last April, a group of educators and health workers (including myself) from many parts of the world met in London to plan the CHILD-to-Child Program. We drafted a selection of a dozen or so activities, which we put into a series of simple pamphlets. We hope that, with the aid of these "activity sheets," primary school teachers, health workers and other community leaders will succeed in helping children learn what they can do to help protect and improve the health of younger children.

The CHILD-to-Child activities deal with the following themes:

1. How do we know if children get enough to eat.
2. Healthier foods for babies and children.
3. Care of children with diarrhea.
4. Accidents.
5. Our neighborhood--making it better.
6. Finding out how well children see and hear.
7. Our teeth.
8. Health scouts.
9. Playing with younger children.
10. Toys and games for young children.
11. Children's theater--and stories about safety and health.
12. Understanding children with special problems.

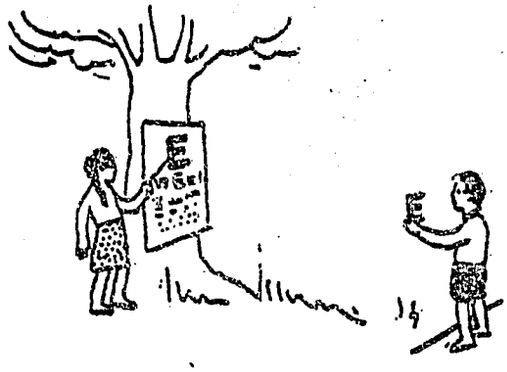

In the activity "Finding out how well children see and hear," children can make their own eye chart and practice using it to test each other's vision. Then they can think of ways to give the test to pre-school children they know.

The children can test the hearing of their little brothers and sisters in a way that is like a game.

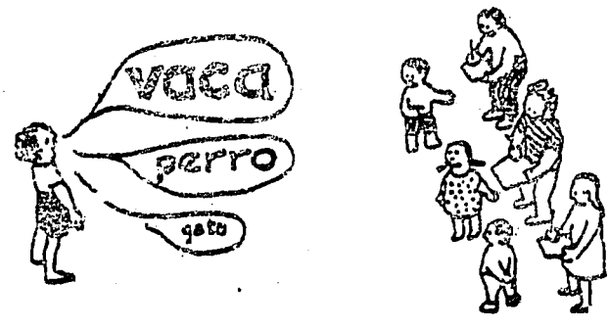

The activity "Understanding children with special problems" helps children to see and appreciate the strengths of a handicapped child, rather than feeling sorry for his weaknesses.

In the activity on "Children's theater," children are encouraged to present skits and puppet shows to teach other children about important aspects of health.

In the activity "Healthier foods for babies and children," children work together on school or family vegetable gardens.

The School Garden

Older children can help the younger ones plant a garden or sow seeds in a seed bed. Fruiting plants like papaya, that grow rapidly, are best because they can "see" them grow.

After testing these different activities in different countries, those which turn out best are being translated and sent to national committees for the International Year of the Child, and to whatever programs and groups are interested in using them. We hope that these ideas and information will reach as many children as possible.

Several of these activities (#1,3,4,6, and 12) have been tried out by the school children in Ajoya, Sinaloa, with the cooperation of the village health team, the primary school teachers, and ultimately almost the whole village. Some of the activities were introduced by the health workers, others by the school teachers.

It was a great success! Both children and teachers were enthusiastic about taking part in a learning program that related education to real life.

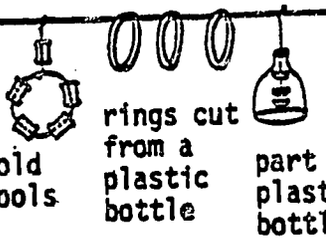

Toys on a string for baby

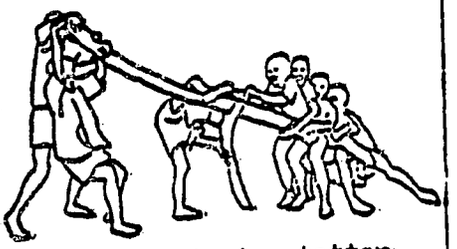

A child-made teeter-totter

In the activity "Playing with younger children, "children learn to make games for babies and preschool children.

Of the activities tried out by the children in Ajoya, one of the most exciting and successful was "Care of children with diarrhea."

To introduce the activity, the health workers, together with the teachers, talked to the fifth and sixth grade children about "el chorro" (the trots), its causes, its prevention, and the reasons why it is especially dangerous for small children.

Many of the village children had the idea that diarrhea in babies comes from "la caída de mollera" (fallen fontanel). Many had seen their mothers "levantar la mollera" (lift the soft spot) in order to treat a baby's diarrhea. Although the children had heard of dehydration, they did not clearly understand its relation to diarrhea or the soft spot on a baby's head.

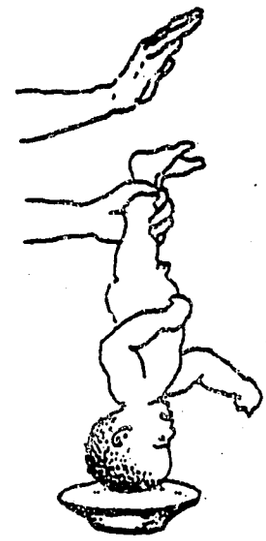

To treat a baby's diarrhea, village mothers "raise the soft spot" on the baby's head by holding him upside down and slapping his feet.

In order to discover the relation between diarrhea and dehydration, they made a sort of "gourd baby":

Fix a gourd like this.

small hole with a plug

Fill it to the brim with water and cover it with a thin cloth.

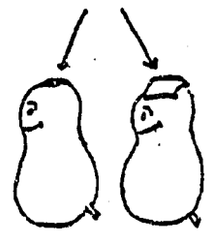

Then pull the plug and watch the "soft spot" sink in.

The children had a great time performing this demonstration--and at the same time learned the way in which diarrhea causes "caída de mollera." To teach what they had learned to other children and their mothers, they made posters explaining that: "FALLEN FONTANEL" IS A SIGN OF DEHYDRATION. IT MEANS THE BABY NEEDS MORE LIQUID.

A sunken soft spot means the baby needs more liquid.

Using the same gourd, the children went on to discover other signs of dehydration. For example, they put small holes at the corners of the eyes, and noticed the following:

When the gourd was full of water, it formed tears.

water level

tears form when the baby cries.

When water has been lost, tears no longer form.

no tears now when the baby cries

water level

The children also discovered that:

when it has enough water, it urinates well

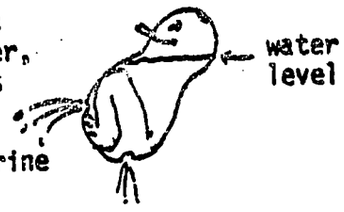

when it has lost a lot of liquid, it no longer passes urine (although the diarrhea continues)

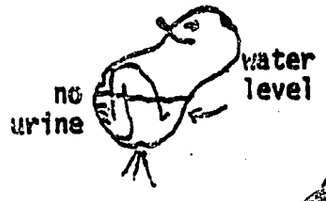

In addition they learned that when there is vomiting as well as diarrhea, liquid is lost faster and there is more danger of dehydration.

with vomiting liquid is lost more quickly

However, they learned that if water is replaced as fast as it is lost, the baby will not become dehydrated.

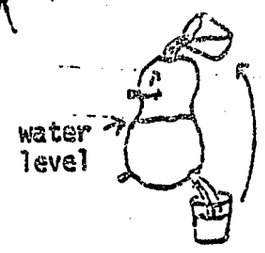

To learn just how dangerous dehydration is to a baby, the children cut a number of flowers and plants. Some they put in water, others they kept without water. Later they saw the results and talked about what happens to a baby.

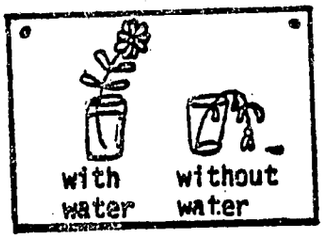

Finally, the children wrote on the blackboard the signs of dehydration they had discovered.

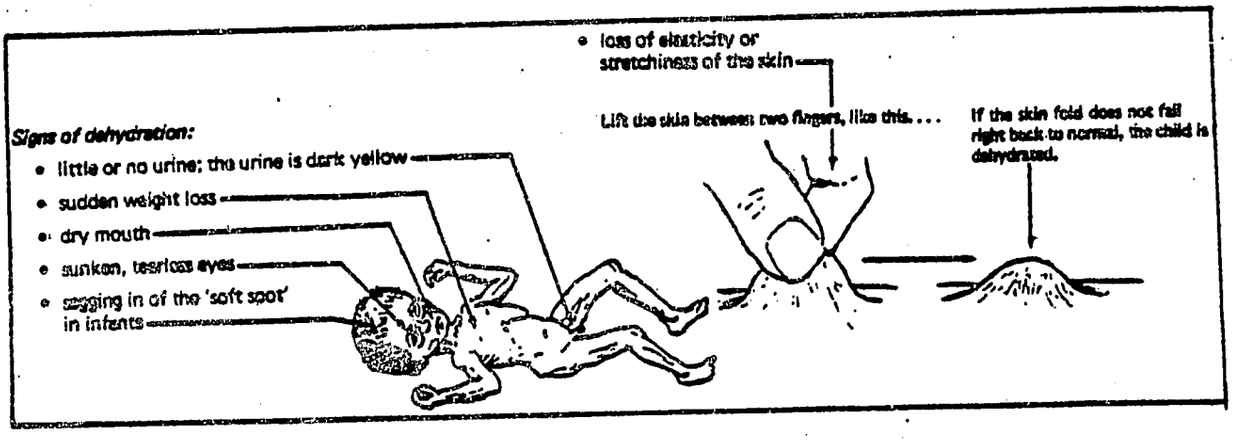

It was explained to the children that in many villages the dehydration which results from diarrhea is the biggest cause of death in babies. The school children wanted to find out if this was also true in Ajoya.

They decided to conduct a survey. After school, they went home and asked their mothers about each of their small brothers and sisters:

--his or her age
--how many times he or she had had diarrhea in the last year
--how the baby is fed (breast or bottle)
--if any child had died because of diarrhea

When the children came back to school, they wrote their findings on the blackboard.

The children's survey uncovered the disturbing fact that (in spite of efforts by the health workers) 80% of the mothers have been bottle feeding their babies. The survey also showed that in Ajoya BOTTLE FED BABIES GET DIARRHEA FIVE TIMES AS OFTEN AS BREAST FED BABIES.

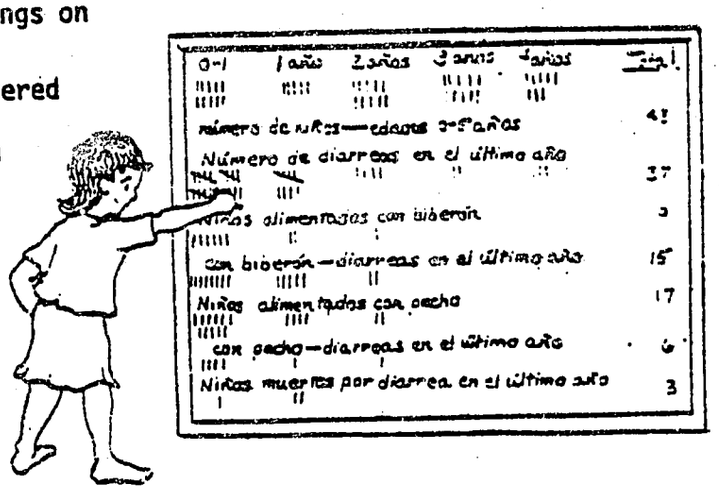

Shocked by the results of their own survey, the village children got busy drawing posters to show their mothers how important it is to breast feed rather than bottle feed their younger brothers and sisters:

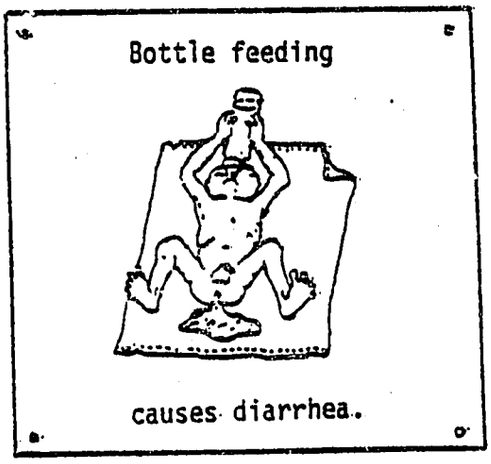

The children learned that in most cases of diarrhea, no medicines are necessary. What is most important is to PREVENT OR CORRECT DEHYDRATION. To do this, it is important to GIVE THE CHILD LOTS OF LIQUID:

Continue breast feeding the baby

and also give him a mild herbal tea or SPECIAL REHYDRATION DRINK

The children studied how to make a SPECIAL DRINK to give to babies or other persons with diarrhea. The CHILD-to-Child activity sheet explained several ways of measuring the contents:

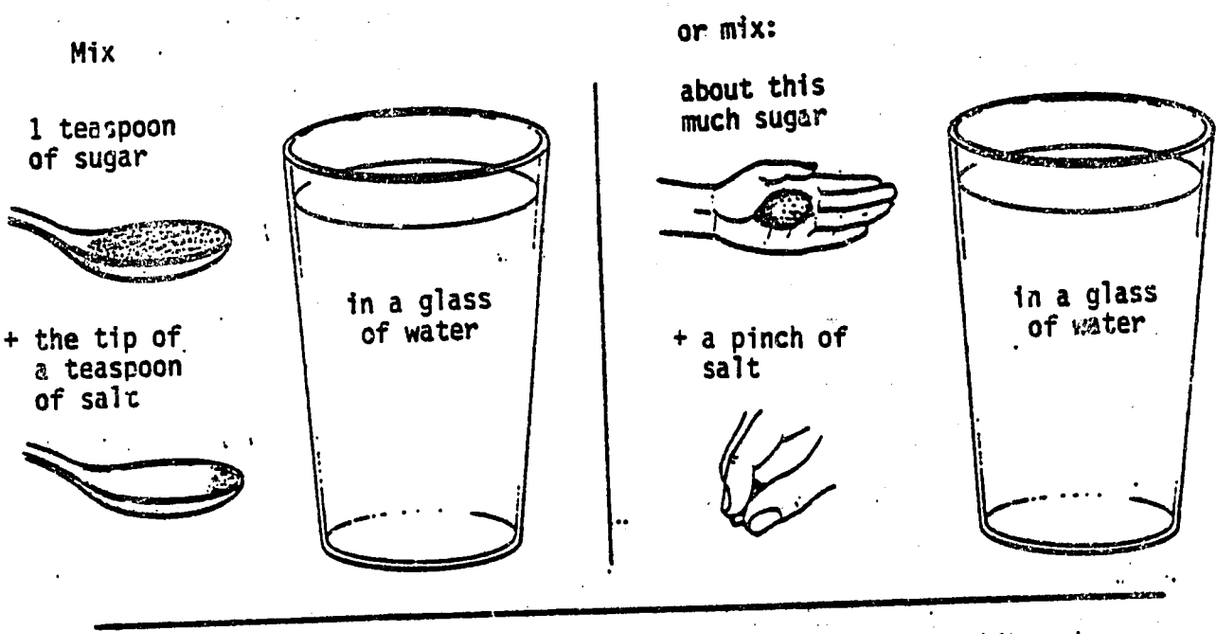

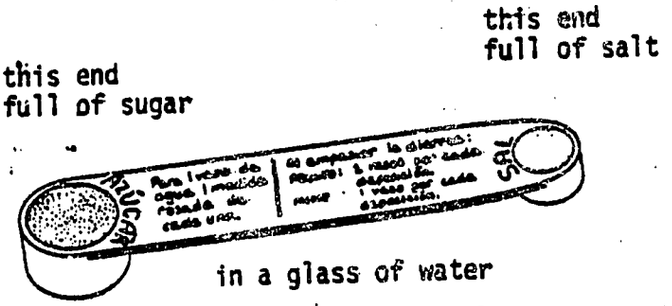

Or use a special plastic spoon like this one.

The children thought that using the special plastic spoon would be more exact, but they didn't have the spoons. (Also, to introduce these spoons would be to encourage dependence on an outside resource and high technology.)

However, one more possibility was suggested: the children could make special spoons themselves. The activity sheet gave instructions for making spoons out of bottlecaps and old juice or beer cans.

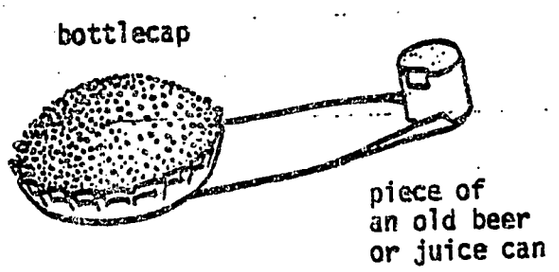

Although these instructions included drawings and step-by-step directions for making the spoons, for some reason neither the children nor their teachers or health workers showed any interest in making them at first. So I made a sample. As soon as they had the sample spoon in their hands, both the health workers and the children began to make them with enthusiasm. The children loved it--it was like making model wagons. It was easy and it was fun!

How children can make measuring spoons for preparing a SPECIAL DRINK to protect a child with diarrhea.

Children can make measuring spoons from many things. But it is important that they measure more or less the right amount of sugar and salt.

Here is one way to make spoons using things that have been thrown away.

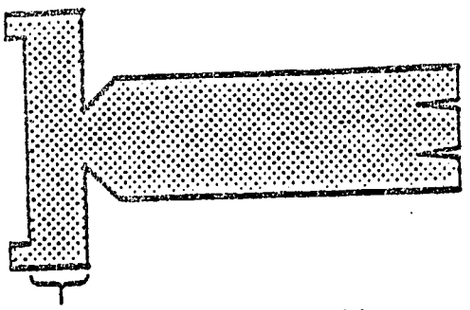

1 Cut a juice or beer can to this shape. (It is easy with scissors).

Make this part as wide as a pencil is thick.

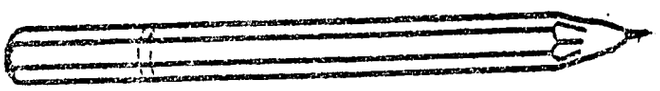

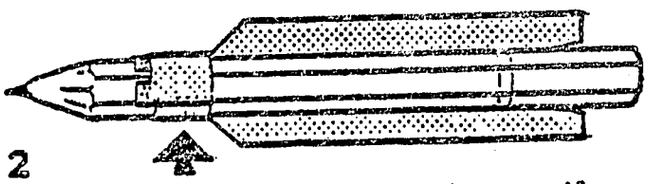

2

Wrap this part tightly around a pencil.

3

In the middle of a bottlecap make a small cut.

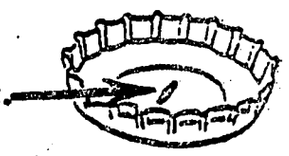

4

Join the pieces and bend over the tabs.

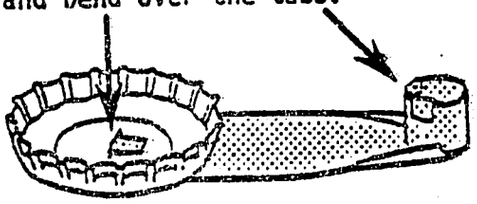

To make the SPECIAL DRINK for a child with diarrhea or dehydration.

Put 1 heaping bottle cap of SUGAR, and 1 little spoon of SALT

in a medium-sized glass of WATER and mix well.

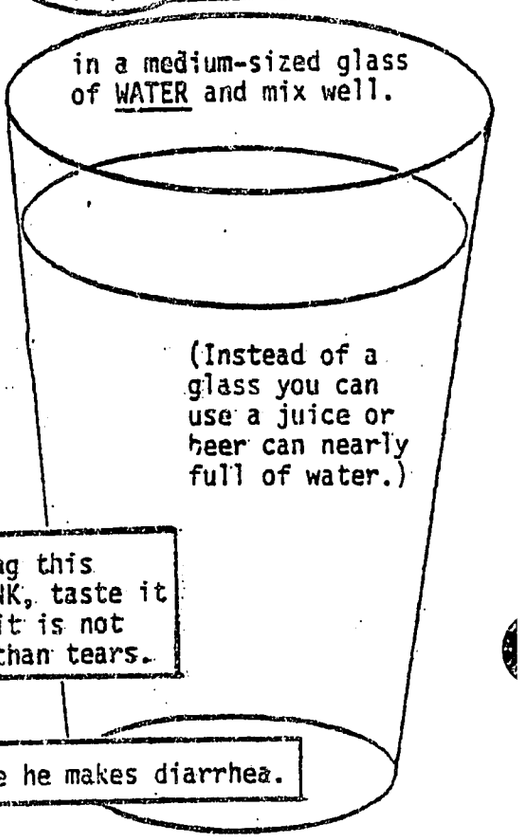

(Instead of a glass you can use a juice or beer can nearly full of water.)

Before giving this SPECIAL DRINK, taste it to be sure it is not more salty than tears.

Give the child 1 glass of SPECIAL DRINK for each time he makes diarrhea.

The fifth and sixth grade children became so enthusiastic about the CHILD-to-Child activity on diarrhea that they prepared classes and demonstrations for the children in other grades. The first and second graders were delighted with the demonstrations of the gourd baby. After the demonstration, when the older children asked the younger ones "What caused the soft spot to sink in?" the little ones bellowed in chorus "The loss of liquid! The diarrhea caused it!" And when they were asked, "And what does the baby need when the soft spot sinks in?" they all cried out "More liquid! More water!"

Later, the school children gave demonstrations to their mothers. They showed them how to use the measuring spoons they had made, and explained how to mix and give the SPECIAL DRINK to a person with diarrhea:

Begin giving the special drink right away when diarrhea begins.

An adult should drink 2 glasses of SPECIAL DRINK for each time he has diarrhea.

A child should drink 1 glass of SPECIAL DRINK for each time he has diarrhea.

If he vomits it back up, keep giving the SPECIAL DRINK--in small sips every 2 or 3 minutes. Keep doing this until the diarrhea stops and the child urinates normally.

As a result of this activity, the children, their mothers and the health workers decided to put on an evening fiesta for the whole village, presenting skits in the form of a "teatro campesino." Everyone was invited. The children presented the gourd babies and gave other demonstrations. The mothers put on a play which showed in a dramatic and tragic way the harm that can be caused by bottle feeding, and why "breast is best." They used a series of cardboard babies, thin ones and fat ones, healthy ones and ones that had diarrhea.

The fiesta was a magnificent success. Almost the entire village of 850 people showed up. For days afterward, people spoke about what caused "fallen fontanel," about the importance of breast feeding babies, and the way in which a SPECIAL DRINK can be made at home to prevent dehydration.

---oOOoo---

In the same sort of way, the other activities of the CHILD-to-Child Program help children to take more responsibility for the health and well-being of their younger brothers and sisters. If you would like to participate with a group of children in the CHILD-to-Child Program, or adapt some of these activities for use in your community health project, write for the packet of activities and information to...

CHILD-to-Child Program
30 Guilford Street
London WC1N 1EH, ENGLAND

I hope that many of you find a way to take part in the CHILD-to-Child Program. It's worth it.

--David Werner

HOW THE CHILDREN OF
AJOYA, SINALOA, MEXICO
ARE HELPING THE
CHILDREN OF THE WORLD

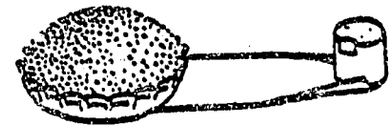

The children of Ajoya recognize the importance of giving SPECIAL REHYDRATION DRINK to children with diarrhea. This helps to prevent or combat dehydration, the main cause of death in small children.

They have also learned to make simple spoons for measuring the right quantities of sugar and salt for preparing the SPECIAL DRINK. They make these spoons out of bottlecaps and old beer or cola cans.

Insofar as they themselves did not realize how easy it is to make these spoons until they had a sample spoon in hand, the children of Ajoya have made several hundred spoons so that children in other parts of the world will have samples and be able to make their own. The sample spoons they have made they have sent to England, where the coordinators of the CHILD-to-Child Program will send them to the National Committees for the International Year of the Child in different countries. The Ajoya school children hope that each Committee will pick schools in their country in which children can produce more samples, send them to other schools, and so on until they reach all the schools and villages in their country--a pyramid of children helping children.

The children of Ajoya hope that the different National Committees and the children of their countries will all cooperate in this activity. For they know how important it is. They know that in their own village, in the last few years the number of children under age 5 who have died has dropped from 34% to 5%, not so much because of improved medical services but mainly because many of their mothers have learned how to make REHYDRATION DRINK and give it to their children when they have diarrhea.

They realize that if the children of the world, by means of these spoons made from bottlecaps, can help their mothers learn to give their babies with diarrhea the liquid that they need, THESE SPOONS COULD DO MORE THAN ALL THE DOCTORS AND HOSPITALS IN THE WORLD TO LOWER THE RATE OF INFANT MORTALITY!

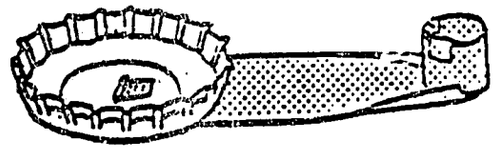

P. S. The children of Ajoya will gladly send a hand-made SAMPLE SPOON to whatever group or program is interested in making them with the help of the children in their area. The sample spoon will be sent with complete instructions. Write to:

La Clínica de Ajoya
Ajoya, San Ignacio
Sinaloa, MEXICO

or

Hesperian Foundation
P.O. Box 1692
Palo Alto, CA 94302
U.S.A.

Attachment III-19-Q

SENTENCE COMPLETION EXERCISE: Describing and Defining Women in Development

When women work in non-traditional roles, men gain ....

When women work in non-traditional roles, men lose ....

When women work in non-traditional roles, women gain ....

When women work in non-traditional roles, women lose ....

Women play a greater role in providing for the community's basic human needs because ....

The fact that women's contributions to the economy are not calculated, causes ....

The participation of women in my country/project has its roots in ....

When some men think of development, they do not think of women playing a role, because ....

When some women think of development, they do not think of themselves playing a role, because ....

When women are not included in appropriate technology projects, then ....

One reason to include women in appropriate technology efforts is ....

TASK ANALYSIS

PROJECT : Build a Stationary Dynapod from Bicycle Parts for Powering a Food Grinder

TASKS	TASK ELEMENTS	PERFORMANCE CRITERIA	KNOWLEDGE AND COGNITIVE SKILLS	MATERIALS	TOOLS
1. Disassemble a bicycle OR			Knowledge of what parts may be overworn & unusable		Channel locks, hammer, screwdriver (flat & Phillips)
2. Acquire required spare bicycle parts			Knowledge of which bicycle parts are required for building a dynapod		
3. Invert & stabilize frame	Bolt or weld crossmember to bicycle Affix gussets to crossmember	Bicycle stays stationary & upright when pedaled	Knowledge of forces acting on bicycle when pedaled for placement of stabilizing members	Nuts, bolts, wood or metal stakes, conduit or angle iron or wood, 16 p. nails	Hacksaw, saw, drill, hammer, channel locks, welding unit
4. Determine location of seat		Comfort & efficiency in pedaling	Knowledge of optimum lengths, sizes & spacings for efficient use by a particular operator		

Previous Page Blank

TASK ANALYSIS

PROJECT : Build a Stationary Dynapod from Bicycle Parts for Powering a Food Grinder

TASKS	TASK ELEMENTS	PERFORMANCE CRITERIA	KNOWLEDGE AND COGNITIVE SKILLS	MATERIALS	TOOLS
5. Construct seat support	Cut and attach supports to frame.		Basic tool skills	Plywood, wood, nails, seat materials (canvas, leather, etc.)	Hammer, saw
	Cut and attach gussets and membranes to support.	Seat support is roughly horizontal Seat support is strong and rigid enough to support operator.			
6. Construct & affix seat	Cut wood to proper shape of seat		Knowledge of basic shape of seat for comfort	Wood, nails	Hammer, saw, sandpaper
	Affix seat to support	Seat is structurally sound enough to support operator safely when dynapod is in operation			

TASK ANALYSIS

PROJECT : Build a Stationary Dynapod from Bicycle Parts for Powering a Food Grinder

TASKS	TASK ELEMENTS	PERFORMANCE CRITERIA	KNOWLEDGE AND COGNITIVE SKILLS	MATERIALS	TOOLS
7. Determine velocity & torque of driven mechanism (food grinder)	Hand crank food grinder & count RPMs		Knowledge of maximum and/or optimum velocity of unit	Operating mechanism to be used	
8. Size sprockets	Determine proper speed of driven unit Apply ratios to determine optimum sizes & sprockets	Choice and/or positioning of sprockets gives required velocity & torque based on normal pedaling velocity	Ability to determine gear ratios	Paper	Pencil
9. Reverse sprockets on bicycle frame if necessary	Enlarge hole in small sprocket Make hole smaller on large sprocket Spot weld sprockets in place	Sufficient strength of welds to withstand operating forces		Rods, gas torch unit	Welding unit, mask, drill, file, metal rasp, cutting torch

TASK ANALYSIS

PROJECT : Build a Stationary Dynapod from Bicycle Parts for Powering a Food Grinder

TASKS	TASK ELEMENTS	PERFORMANCE CRITERIA	KNOWLEDGE AND COGNITIVE SKILLS	MATERIALS	TOOLS
10. Affix driven sprocket to drive shaft of grinder	Adjust center hole size of sprocket to grinder shaft size Weld nut of same bore size as grinder shaft to sprocket Attach to grinder by drilling & threading set screw		Familiarity with welding	Gas torch unit (oxygen actelyne), piece of metal	Welding unit, mask, drill, file, metal rasp, cutting torch
11. Lengthen chain so as to fit correctly between the two sprockets	Locate workable chain sections Open chains if in closed loop Lengthen or shorten the sections to proper lengths Mount on dynapod	Trainee able to perform task & not damage chain	Basic tool skills	Chain sections	Hammer, 16d nail, measuring tape, pliers

TASK ANALYSIS

PROJECT : Build a Stationary Dynapod from Bicycle Parts for Powering a Food Grinder

TASKS	TASK ELEMENTS	PERFORMANCE CRITERIA	KNOWLEDGE AND COGNITIVE SKILLS	MATERIALS	TOOLS
11. Lengthen chain so as to fit correctly between the two sprockets, continued	Rejoin sections to create proper chain loop size around sprockets Lubricate				
12. Attach chain to sprockets and operate		Overall Criterion Driven unit performs task required, in a suitable length of time with minimum fatigue to the operator.		Finished dynopod unit	

TASK ANALYSIS

PROJECT : Build a Mobile Dynapod Using a Functional Bicycle

TASKS	TASK ELEMENTS	PERFORMANCE CRITERIA	KNOWLEDGE AND COGNITIVE SKILLS	MATERIALS	TOOLS
1. Build a stationary platform for roller drive assembly & driven unit if attached	Size & join wooden frame members together according to general plan	Sufficient strength & stability to withstand forces of bicycle	Basic woodworking tool skills	Wood, nails, metal rod, spare rear rim & hub excluding tire	Hammer, saw, drill
2. Affix roller to platform	Locate & couple roller to frame	Roller revolves with minimal resistance & is capable of withstanding forces of bicycle	Knowledge of mechanics of energy transference; basic geometry	Metal plate, lock nuts, grease	Drill, hacksaw, wrench
3. Determine torque & velocity requirement of driven unit	Using intuitive assessment measure values for operation, i.e. visual & muscular evaluation		Fundamentals of basic mechanics		
4. Determine velocity of roller	Calculation	Correct arithmetic process	Same as above		
5. Size sprockets	Calculation of size Acquisition of proper sprockets	Same as above	Same as above	Sprockets	

Previous Page Blank

TASK ANALYSIS

PROJECT : Build a Mobile Dynapod Using a Functional Bicycle

TASKS	TASK ELEMENTS	PERFORMANCE CRITERIA	KNOWLEDGE AND COGNITIVE SKILLS	MATERIALS	TOOLS
6. Design & construct stable vertical system for bicycle	Bolt or nail uprights to support bicycle in front of rear axle Affix turnbuckles to tie bicycle in stable position	Bicycle sufficiently stabilized during pedaling operation	Knowledge of support criteria	Wo[illegible] nails, bolts, turnbuckles	Hammer, saw
7. Affix sprocket to driven roller	Align sprocket so it is true to axis of rotation Weld sprocket in place	Sprocket does not wobble when rotating. Should be strong enough to withstand torque of operation	Principles of basic welding	Sprocket, large nut	Welder & rods
8. Lengthen chain	Locate master link or punch out pins of 1 link Add or subtract (remove) proper number of links Reconnect links	Chain is proper length	Knowledge of proper (optimal) chain tension for best performance	Additional chain links	Channel locks, hammer punch

TASK ANAL

PROJECT : Build a Mobile Dynapod Using Functional Bicycle

TASKS	TASK ELEMENTS	PERFORMANCE CRITERIA	KNOWLEDGE AND COGNITIVE SKILLS	MATERIALS	TOOLS
9. Affix sprocket on driven unit	Align sprocket	Sprocket is true with axis of rotation		Large nut	Drill, tap
10. Construct wooden pulley if necessary	Scribe proper radius on plywood for outer rim of pulley, noting center point Scribe inner rim of pulley to laminate proper width for belt Laminate pieces together	Pulley rotates on center axis & belt surface remains true		Plywood, nails, inner-tube, leather or heavy canvas	String, pencil, nail, saw, glue, wood rasp, scissors, awl
11. Attach chain or belt to system & operate		Unit operates adequately & satisfies terminal objective of this project			
		Overall Criterion Grinder is driven with appropriate velocity, ease of operation, & mobile dynapod is usable with any functional bicycle.			

PROJECT: Build a Treadle Powered Device to Operate a Working Piece of Equipment

TASKS	TASK ELEMENTS	PERFORMANCE CRITERIA	KNOWLEDGE AND COGNITIVE SKILLS	MATERIALS	TOOLS
1. Gather necessary materials to construct framework			Knowledge of the proper materials	Various sizes of lumber	
2. Construct framework structure		Framework is proper size and stands on all legs	Understanding of plans	Wood	Hammer, saw, nails square, tape measure
3. Affix membranes on cross supports to make framework rigid	Cut and attach members to all four sides of frame	Framework is sufficiently rigid to withstand longterm use	Knowledge of forces & stress on the frame when in operation	Wood or plywood	same as above
4. Determine flywheel size and construction		The flywheel is of sufficient mass and size to operate driven unit properly	Knowledge of the physics of inertia & momentum		
5. Mount supports for flywheel and drive axle	Locate position for proper clearances & orientation. Nail or bolt to frame		Adequate understanding of unit to orient the axle properly	Wood	Same as above

Previous Page Blank

PROJECT: Build a Treadle Powered Device to Operate a Working Piece of Equipment

TASKS	TASK ELEMENTS	PERFORMANCE CRITERIA	KNOLWEDGE AND COGNITIVE SKILLS	MATERIALS	TOOLS
6. Mount axle bearings	Locate position on the supports Align bearings for proper axle rotation Bolt bearings to supports			Bolts, axle bearings, washers	Tape measure, wrench, drill and bits
7. Construct table top	Cut wood to proper size Attach to frame top	Table is strong enough to support driven unit	Basic tool skills	Wood	Hammer, saw nails, square
8. Construct flywheel	Locate small bicycle wheel Adapt to frame top Construct formwork to contain concrete (or adobe) mixture to be poured between axle and rim Pour adobe or concrete in form & let cure Set treadle connecting pin in concrete	Cut out material & tie to outside of spokes on both sides of wheel to form cavity between axle & rim Completed pour holds shape & will last Secure enough to withstand operating forces Located the correct distance from axis of rotation of flywheel	Basic tool skills Familiarity with adobe or concrete mixes Knowledge of the mechanics of operation	Plastic, sheetmetal, or heavy paper Cement or mud, sand, water 3" bolt	Appropriate cutting tool Shovel

PROJECT: Build a Treadle Powered Device to Operate a Working Piece of Equipment

TASKS	TASK ELEMENTS	PERFORMANCE CRITERIA	KNOWLEDGE AND COGNITIVE SKILLS	MATERIALS	TOOLS
8. Construct flywheel, continued	Balance flywheel	Flywheel is adequately balanced	Basic knowledge of mechanics	Wire, machine nuts	
9. Mount flywheel on axle	Slide flywheel over axle Thread compression nut securely to flywheel, or tighten set screw, or apply cotter key	Flywheel rotates true Flywheel is adequately secured to axle	Basic tool skills	Applicable securing device	Wrench
10. Adapt & mount sprocket pulley to axle	Weld proper size bushing to sprocket/pulley Mount on axle	The sprocket/pulley does not slip on axle Is of proper size	Familiarity with welding equipment, if needed	Sprocket/pulley, welding equipment, hood	Wrench
11. Construct treadle	Construct treadle frame Construct foot pad Mount on frame with hinges	Must be strong enough to last The treadle frame is oriented properly so it can drive the flywheel axle	Basic tool skills	Wood, nails, 2 small hinges, screws	Saw, hammer, screwdriver, tape measure
12. Connect treadle to flywheel	Affix connector on to treadle foot pad Connect chain, rod, or rope between flywheel and treadle	Link is strong enough to withstand extended use	Basic tool skills	Chain, wood or metal rod, or rope; screw eye	Wrench Appropriate cutter

PROJECT: Build a Treadle Powered Device to Operate a Working Piece of Equipment

TASK	TASK ELEMENTS	PERFORMANCE CRITERIA	KNOWLEDGE AND COGNITIVE SKILLS	MATERIALS	TOOLS
13. Mount driven unit on table		Is secure and properly oriented	Basic tool skills	bolts	Drill, bits wrench
14. Cut hole in table to accept chain/ pulley		Is large enough and in proper location	Basic tool skills		Saw, measuring tape
15. Mount sprocket/ pulley on driven unit		Sprocket/pulley is the correct size and is mounted securely	Basic tool skills	Sprocket/ pulley	Wrench or screwdriver
16. Connect driven unit to treadle with chain/belt	Lengthen/shorten the chain/belt so as to fit beween the units Affix the belt/chain to the driven unit	Length of belt/chain can be corrected with minimum of tools	Knowledge of belt/chain characteristics	Belt/chain	Nail & hammer, or knife & heavy needle Heavy thread

MID-PROGRAM EVALUATION

Time: Approximately 4 hours. Note: Procedure times are estimated and will vary according to the individual program.

Objective: The Trainees and Training Staff will review and evaluate the program (e.g., content, methodology, goals and objectives), and will provide one another with constructive feedback and suggestions for improving the remaining weeks of training.

Overview: It is beneficial to provide a structured time for reflection on the changes and progress that have occurred during the first phases of training. Through a general evaluation of the program, the Trainees, and the Training Staff, may gain new perspective on the ways that the training philosophy, methodology and content have provided for the individual needs of the participants, and have facilitated the learning experiences necessary to effective and appropriate extension work.

Materials Needed: Newsprint, markers, pens, paper.

Procedure

1. (10-15 minutes) An agenda and a brief overview of the session are presented, including an explanation of the evaluation topics.

2. (30 minutes) Sheets of newsprint are posted around the room, and markers are distributed to all Trainees. Each sheet is divided to form 2 columns: one for positive comments and another for negative observations and specific suggestions for improvement. There should be one sheet for each area of the first three phases: mud block and earthen (Lorena) stove construction; pedal power applications; health and nutrition; the role of the appropriate technology volunteer in development; extension sessions; women in development. The Trainees are asked to circulate, and anonymously write comments and observations about the various content areas on the newsprint provided. It is suggested that the newsprint remain posted for a short time after the evaluation, so that the Trainees may add additional feedback, and contemplate what others have written.

3. (30 minutes) The Trainer distributes the expectation sheets prepared in the first phase of training (see pp. 18-19). The Trainees form discussion groups of 4-5 people, and a sheet of newsprint is given to each group. (A Trainer may join each discussion group, if desired.) They are instructed to discuss the overall program, and write general criticisms and suggestions for improving the program. Some questions for discussion are:

- Has the program met expectations?
- Is the program providing adequate skills training in all areas?
- Is the technical level too high or too low?
- In what ways could the program be better adapted to suit individual needs?

4. (30 minutes) Each Trainee writes an anonymous assessment of each Trainer, using the following points for consideration: (Note: It may facilitate the exercise if a prepared evaluation sheet is distributed to the Trainees)

- ability to effectively communicate technical information
- apparent knowledge of subject matter
- ability to integrate technical skills training with other important aspects of training, e.g., health and nutrition, women in development, the role of the extensionist, and cross-cultural factors
- methodology
- suggestions for improvement

5. (1 hour) The Trainees are asked to evaluate, in writing, their own performance during the first weeks of the program. The evaluation should include:

- physical and technical skills
- cognitive skills
- general attitude
- communication and extension skills
- specific problems encountered
- types of improvement noted

6. (1 hour 30 minutes) When the Trainees finish the self-evaluatic they should meet individually with a Trainer, preferably a counterpart; that is, a staff member with whom each Trainee has established rapport, and has an on-going counseling relationship. During this activity, a break may be scheduled for the Trainees when they are not involved in individual meetings.

7. (45 minutes) The Staff and Trainees assemble for a general evaluation and discussion of the group dynamics during the first part of the training program. Some questions for discussion are:

What major problems has the group encountered?

Has the group been able to resolve conflicts and problems? how, or why not?

How might unresolved conflicts and problems be resolved?

In what way does the training experience reflect future realities of Peace Corps service? Does training mirror the situations that might be expected while working with groups during a Peace Corps assignment?

How can group dynamics be improved?

PHASE IV : SOLAR WATER HEATERS

HEALTH / NUTRITION

WOMEN IN DEVELOPMENT

ROLE OF THE VOLUNTEER IN DEVELOPMENT

	DAY 1	DAY 2	DAY 3
A.M.	Session 1: Passive Solar Design: The Path of the Sun Session 2: Passive Solar Design: Insolation	Session 5: First Aid Session 6: Extension / Demonstration of Technical Concepts: Thermosyphon	Session 9: First Aid Session 10: Plumbing a Solar Water Heater
P.M.	Session 3: Introduction to Solar Water Heating: Determining Hot Water Demand Session 4: Passive Solar Design: Heat Transfer	Session 7: Solar Water Heating: Presentation and Analysis of Data Session 8: Developing and Using a Sizing System	Session 11: Water Heater Design: Group Problem Solving and Consensus Decision Making

	DAY 4	DAY 5	DAY 6
A.M.	Session 12: First Aid Session 13: Shade Mapping and Site Selection	Session 15: First Aid Session 16: Construction of the Water Heater Enclosure Part I	Session 17: An Exercise in Assessing Community Water Needs and Uses
P.M.	Session 14: Site Preparation and Acquisition of Materials		

Previous Page Blank

	DAY 7	DAY 8	DAY 9
A.M.	Session 18: Construction of the Water Heater Enclosure Part II	Session 19: Water Tank Preparation	Session 21: Cultural Perspectives of Women and Men's Participation in Development
P.M.		Session 20: Connecting the Plumbing	Session 22: Food Preparation: Using and Assessing Solar Water Heaters

OVERALL TECHNICAL OBJECTIVE:

Given the necessary materials and tools, the Trainee will design, size, construct, position, and install a passive solar water heater so that the system operates in accordance with established temperature and volume requirements.

The Trainee will effectively communicate the principles and potential applications of passive solar design to informally educated or non-technically oriented people, and will demonstrate an understanding of the cultural and health implications of introducing solar technology to a rural village.

SESSION 1
The Path of the Sun

Time: 2 hours

Interim Objective: Given a series of sun charts, latitudes, dates, and time of day, the Trainee will determine the position of the sun (azimuth and altitude) to within 2 degrees.

Interim Objective: Given a hypothetical shade map, the Trainee will determine if the collector will receive sufficient sunlight during the winter months.

Overview: The Trainer explains the difference between magnetic and true north and south, explains how to read a sun chart, and demonstrates the sun's path with either a sun angle calculator or a heliodon. The session ends with a simple test to determine the Trainees' understanding of the material presented.

Suggested Resources

Mazria, Edward, *Passive Solar Energy Book*, Rodale Press; pp. 5-13; 302-338.

Bennett, Robert, *Sun Angles for Design*, 6 Snowden Rd., Bala Cynwyd, PA 19004;1978; pp. 27, 31, 35, 39, 47, 53.

Attachment IV-1-A : Magnetic Declination Chart

Attachment IV-1-B : Heliodon Plans

Attachment IV-1-C : Passive Solar Design, Interim Objective #1

Attachment IV-1-D : Passive Solar Design, Interim Objective #2

Materials Needed: Solar site selector, heliodon, sun angle calculator, directional compass.

Procedure

1. (10 minutes) Introduction: The Trainer discusses the various methods to be used during the session to determine the sun's location in the sky.

2. (40 minutes) Reading Sun Charts: The Trainer distributes a packet of sun charts -- one chart for each of the following north latitudes: 0°, 8°, 16°, 24°, 32°, and that of the training site (see Bennett, pp. 27, 31, 35, 39, 47, and page corresponding to latitude of training site). Trainer also distributes the magnetic declination chart (Attachment IV-1-A).

The discussion begins with an explanation of how to find true south from magnetic south (shown on a compass). The Trainees are asked to locate the training site on the magnetic declinator map. The declination shown (for example, 17E) is defined: the reading 17E indicates that magnetic north is 17° east of true north; it also means that true south is 17° east of magnetic south. A diagram similar to that used for shade mapping (see solar water heaters or agricultural dryers) may be sketched on a chalkboard to simplify this discussion. At a training center in the northern hemisphere, the southerly direction of the sun gives the term "true south" more meaning than "true north", thus "17E" is interpreted to read: "true south is 17° east of magnetic south". (A compass should be made available to each Trainee for this exercise.)

The Trainer then graphically describes the path of the sun on the solstices and equinoxes, using the sun chart for the approximate latitude (that of the training site), the solar site selector, the heliodon (Attachment IV-1-B), and the sun angle calculator. Each sun path should be individually described, using all four devices (or as many as are available).

Questions are taken. The Trainer should be satisfied that the Trainees understand how to determine and describe the sun's path at the latitude of the training site before going on to the next activity.

3. (30 minutes) Sun Paths at Different Latitudes: The Trainer explains the sun's path at various latitudes (e.g. 0, 8, 16, 24, and 32° north latitudes). The sun angle calculator will be helpful at this time and should be used to demonstrate all latitudes.

The Trainer's talk includes the following information:

> The sun's path on the equator (0° latitude) spends half a year in the southern hemisphere and half a year in the northern hemisphere. The sun always rises at 6 A.M. and always sets at 6 P.M. On the sun chart, the sun's path appears to go off the chart to the left at noon, although it returns from the right and sets in the west. The sun charts are made from a perspective of looking toward the south. Therefore, when the sun is in the northern hemisphere (March through September) it appears to run off the chart. The chart has this appearance because it attempts to show a curved space on a two-dimensional piece of paper.

Note: The sun angle calculator shows the sun's path on the equator very well, and should be used.

4. (25 minutes) Sun Path Assessment: The Trainer distributes a copy of Attachment IV-1-C to each Trainee and explains how it is to be completed, using the packet of sun angle charts (Bennett) as references. The Trainer points out that each set of dates and times is given for a different latitude. To ascertain that there is clear understanding among the group, the Trainer should ask several Trainees to define azimuth and altitude.

5. (15 minutes) Evaluation of Sun Path Assessment Worksheets: The Trainer guides a discussion of the Trainees' answers on the worksheets. Group members should be encouraged to give opinions as to the correct or incorrect nature of the answers.

6. (10 minutes) The Trainer distributes Attachment IV-1-D, and asks the Trainees to trace on it the winter-time sun paths to determine if the hypothetical site will receive sunlight for at least four hours per day, and ideally for six or more hours per day.

SESSION 2
Passive Solar Design: Insolation

Time: 2 hours

Interim Objective: Given a list of energy transfer terms (e.g. BTU/ft^2 day, Kgcal/m^2 hour, etc.), the Trainee will determine which ones are, or could be, used as insolation terms.

Interim Objective: Given hypothetical or actual (Trainee-collected) insolation meter data, the Trainee will determine the insolation at a potential solar site to within 2% of the Trainer's calculations using the same data.

Overview: The terms "energy" and "insolation" are defined, and then time is provided for Trainees to interpret, define and discuss insolation measurement units. Methods are presented to convert metric units to English units and vice versa. After further practice utilizing insolation terms, the Trainees determine insolation rates from data they have collected from their own insolation meters. The session ends after an explanation of the importance of tilt in solar collector design, and the greenhouse effect of a glazed collector.

Suggested Resources

Mazria, Edward, *The Passive Solar Energy Book*, Rodale Press, pp. 14-27.

Attachment IV-2-E : What is a Calorie?

Attachment IV-2-F : Energy Unit Conversion Factors

Attachment IV-2-G : Energy Transfer Conversion Factors

Attachment IV-2-H : Exponential Equivalents

Attachment IV-2-I : Approximate Available Energy from Various Sources

Attachment IV-2-J : Passive Solar Design, Interim Objective #3

Attachment IV-2-K : Passive Solar Design, Interim Objective #4

Attachment IV-2-L : Variation of Day-long Insolation

Attachment IV-2-M : Solar Radiation Reaching the Ground

Attachment IV-2-N : Greenhouse Effect with Glazing

Procedure

1. (20 minutes) Introduction: The Trainer defines energy units--calories--(Attachments E through I) and insolation (*in*-coming *sol*-ar radia-*tion*).

Previous Page Blank

2. (10 minutes) Definition of Insolation Terms: The Trainees are asked to define insolation, using the terms "energy", "area", and "time". They should be guided to define insolation as: the amount of solar energy striking a certain area over a certain period of time, or, $\frac{\text{energy}}{\text{area x time}}$

3. (10 minutes) Choice of Insolation Terms: The Trainer distributes Attachments J and K, and asks the Trainees to complete Attachment J *only* in 10 minutes. The Trainer may have to define some terms:

Langley = 1 cal/cm^2	Energy unit:	calorie
Watt = joule/sec		BTU
		joule
		watt hour

4. (10 minutes) Correction of Insolation Terms: The Trainer elicits from the Trainees answers and reasons for selecting chosen terms. The group discusses each choice; reasons should be given to substantiate either disagreement or agreement with the given answers.

5. (30 minutes) Insolation Meters: Using data collected by the Trainees from their insolation meters (or Attachment K), the Trainer demonstrates how to determine insolation Kgcal/m^2 day and Kgcal/m^2 hour by using the formulas given on the insolation meter data collection sheet (Attachment I-14-I). The Trainees should explain any differences between various randomly placed meters. Then, the Trainees complete Attachment K and correct their answers, in consultation with other Trainees and the Trainer.

6. (15 minutes) Collector Tilts and Insolation for Various Times of the Year: The Trainer distributes Attachment L and discusses the usefulness of various tilts to collect solar radiation at different times of the year. The Trainer should point out that water heating is needed year 'round, so solar water heaters should be tilted at the latitude $\pm$ 10°. In northern latitudes, space heating is needed during the winter months, so vertical south-facing glass works well. The collector tilt should be such that it collects the maximum amount of solar radiation at the time of year when solar heat is needed.

7. (25 minutes) The Nature of Sunlight and the Greenhouse Effect: The Trainer distributes Attachments M and N and explains the nature of sunlight as it strikes the earth. Then, the greenhouse effect of a glazed solar collector is described: short wavelength solar radiation (light) passes through the glazing, strikes the absorbing surface, turns into longwave radiation (heat) and is trapped by the glazing.

SESSION 3
Introduction to Solar Water Heating: Determining Hot Water Demand

Time: 2 hours

Interim Objective: Given a hot water source, two small calibrated containers, a thermometer, and a data collection sheet, the Trainee will determine the average daily volume and the maximum average temperature requirement for a hypothetical family of six with the following hot water needs: hand washing, dish washing and rinsing, bathing, and other uses.

Overview: After an introductory talk by the Trainer on passive solar water heating and its application in development projects, the Trainees measure hot water usage by performing various activities which commonly require hot water in an average U.S. household. Reports and discussion of the findings will occur in *Session 7*.

Suggested Resources

"Water Boiling in a Peruvian Town", Edward Willin in *Health, Culture, and Community*, ed. by B. Paul; NY: Russell Sage Foundation, 1955; pp. 71-103.

Attachment IV-3-O : Data Collection Sheet

Materials Needed: Hot water, small calibrated containers, thermometer.

Procedure

1. (10 minutes) The Trainer gives an introductory talk about the application of passive solar water heating as a potential renewable energy source in developing countries. The following may be used as an example:

The utilization of simple solar devices can be instrumental in reducing dependence upon increasingly expensive fossil fuels and limited forest resources. Often, innovative solar applications are suitable where other energy sources are scarce or cost prohibitive. The sun's energy can be harnessed for many purposes, including water purification and heating, food drying, cooking, and home heating. Although some types of solar systems require comparatively sophisticated and expensive materials that preclude their wide use in developing countries, there are many low-cost, locally appropriate ways of creatively utilizing solar power to satisfy individual and community needs.

Solar heating devices can provide plentiful, inexpensive hot water for washing, bathing, and water purification. When high temperatures or boiling is a requirement, less additional fuel is necessary to raise the temperature of water preheated by the sun. Under certain conditions, solar heated

water encourages hygiene, facilitates food preparation, and assists in the distillation of water. Simple solar devices can be adapted to a variety of scales and specifications to meet the diverse needs of families, schools, health clinics, and other community services.

It is important to note that while our culture places a great deal of importance on the availability of plentiful hot water for washing and bathing, not all people view water - either hot or cold - in quite the same way. Water, a basic component of life support systems, is often intrinsically involved with traditional health systems and local customs. For example, in some places, bathing in cold water is considered health-giving, the uses of hot water are restricted, and boiled water may be perceived as serving only medicinal purposes (see: Wellin; Goldman). Water may be viewed as a source of power, or disease (often a perception shared by "western" health workers). It should be noted that the ideal water temperature for bathing, washing or consumption is a culturally defined concept: lukewarm in one culture may be comfortably hot in another. We must remember that others may not respond to the introduction of a water heater with the same enthusiasm that we feel about utilizing the sun's energy to provide technological innovation. Consequently, it is crucial to examine and consider the cultural implications of solar water heating if the application of a new technology is to be really appropriate.

In this training program two solar water heaters have been included: the breadbox and the flat plate collector. The breadbox is representative of a variety of direct gain systems which can be easily understood and adapted to many latitudinal and climatic situations. It consists of a water tank contained within an insulated box with two or more transparent sides. Insulated doors are kept closed at night to prevent heat loss and opened during the day to serve as solar reflectors to enhance solar collection. A simple, low-cost water heating and storage system, the breadbox provides low temperature hot water demands such as for residential applications.

Optional Flat Plate Collector:

The flat plate solar collector, although more complex to construct than the breadbox, operates more efficiently, able to produce hot water in the medium to high temperature range (up to 190°F, 87°C). It basically consists of a grid of tubing fastened to a sheet metal absorption plate; the inlet being connected to the bottom of a storage tank and the outlet to the top. The system's operation is based on the principle of thermosiphon: as the water in the tubing grid heats, it flows by natural convection to the higher level of the storage tank and the cold water returns from the bottom to complete the circulation. More costly than the breadbox

due to the additional tools, materials, and higher construction skill level required, the flat plate collector is best suited to situations which demand higher hot water temperatures such as in community health facilities, schools, and small industry.

2. (5 minutes) The Trainer describes the session, explaining the procedure of measuring water temperature and volume, and distributes the hot water volume and temperature data collection sheet (Attachment IV-3-O).

3. (45 minutes during the session; as well as time to record data after the session) Collection of Hot Water Data: The Trainees form four groups, based on the areas of water usage to be studied: hand-washing, bathing, dish washing, and clothes washing. Each group is to:

Predict the frequency, quantity and temperature of water needed for the particular use. (Trainees should poll members in their group to determine an accurate prediction.)

Devise a methodology for quantitatively testing the predictions.

Repeat each use enough times to ascertain the minimum and maximum volume and temperature acceptable to group members.

Record all data on the sheet provided (Attachment IV-3-O).

To perform the calculations on the data collection sheet, the group should first determine the average number of times for each hot water use in a family of six. By multiplying this number by the average volume, and adding all of the products, a total volume of hot water per average day will be obtained. Such data will be used later for sizing a passive solar water heater. Results of the experiments will be reported during *Session 7.*

SESSION 4
Passive Solar Design: Heat Transfer

Time: 2 hours

Interim Objective: The Trainee will analyze and compare the types of heat transfer (conduction, convection, radiation) in various materials and the implications for passive solar design.

Overview: Based on previous experiences, the Trainees define types of heat transfer and use their definitions to devise experiments to analyze the properties of various materials as they are heated and cooled. Based on this information they describe the patterns of heat transfer that take place in a simple solar water heater and give suggestions as to how the information derived from the exercise can be utilized to improve the design of passive solar devices.

Suggested Resources:

Anderson, Bruce, *The Solar Home Book*, 1976, N.H.:Cheshire Books, pp. 62-74

Mazria, Edward, *Passive Solar Energy Book*, Rodale Press, pp. 5-20; 28-43.

Task Analysis: Flat Plate Collector, page 493.

Task Analysis: Solar Agricultural Dryer, page 619.

Materials Needed: Heat source (burner at low heat), thermometer, various materials of cast iron, aluminum, copper, stone, insulation, newspaper, water, wood, adobe.

Procedure

1. (5 minutes) The Trainer gives an explanation of the session's activities.

2. (15 minutes) Based upon their previous experiences, the Trainees (in groups of 4-5), give examples of heat transfer by conduction, convection, and radiation. A recorder is named, and the group develops and writes working definitions of the terms, to be presented to the rest of the groups.

3. (10 minutes) Individual group's definitions and examples of conduction, convection, and radiation are presented and compared.

4. (1 hour) The Trainees devise and conduct experiments to demonstrate the physical effects of heat transfer. They are instructed to use a constant heat source (e.g. a cast iron pan over a low burning flame), a thermometer, and various materials (e.g. wood, rocks, water, air, adobe, newspaper, cloth).

Observations should be recorded. They will provide the basis for a later discussion on the heat transfer properties of various

Previous Page Blank

materials and the implications for low-cost design of solar devices.

5. (10 minutes) The Trainer explains the principles of heat transference, using the thermosyphon flat plate solar water heater as a demonstration model (if one is unavailable, use the drawing showing the flat plate collector in the Task Analysis.)

Radiation from the sun, as light energy, passes through the collector glazing, strikes the absorber plate, and turns into heat energy. Some of this heat is *re-radiated* to the relatively cooler glazing, *conducts* through the glazing and is *convected* away by natural or induced air movement.

The heat energy in the absorber plate *conducts* through the fin and into the tubing, where it is *convected* away by the heat transfer fluid (usually water) to the storage tank.

The lines between the collector and the storage tank must be well insulated or the *convection* fluid (water) will warm the pipe and heat can be *convected* and *re-radiated* away. The storage tank should be insulated for the same reason.

6. (10 minutes) Several Trainees are asked to describe and discuss the heat transfers occurring in either a direct-gain or solar water heater, or in a solar agricultural dryer that the Trainer has sketched on the board or on newsprint. (See the Task Analysis for Flat Plate Collector and Solar Agricultural Dryers.)

7. (15 minutes) The Trainer sketches various successful direct-gain solar water heaters (see *Suggested Resources, Session 11*), and asks the Trainees for suggestions. The Trainees should be encouraged to sketch and describe a possible system, and share their ideas with the entire group.

SESSIONS 5, 9, 12, 15
First Aid

Time: 7½ to 8 hours (divided into four sessions)

Objective: In a situation that simulates or describes injuries or illness, the Trainee will take or outline appropriate action, including first aid measures that are in accordance with American Red Cross guidelines, consistent with the philosophy of causing no harm to the injured or ill person, and within the cultural constraints of a foreign country.

Overview: Through a series of learning experiences (films, lectures, discussions, simulations, and practical and written examinations), the Trainee acquires basic first aid skills, and an understanding of their appropriate use during Peace Corps Service.

Suggested Resources

The Multi-media Standard First Aid Course offered through the American Red Cross provides a workbook, film, materials for demonstration-oriented sessions. The local chaper of the American Red Cross should be contacted for further information.

American National Red Cross, *Multi-media Standard First Aid Student Workbook*, 1978, and *Standard First Aid and Personal Safety*, 1973; Doubleday and Company.

Werner, David, *Where There is No Doctor*, Hesperian Foundation, 1977; pp. 75-106.

Note: The recommended course (covering all areas of basic emergency techniques for "first response" assistance) can be adapted to various training situations. It may be given as a one-day workshop, or as separate units over the course of several days. It is recommended, however, that the first aid training be given in a short time span, rather than spread out over the entire training program, so that learning and practical experience are intensified and reinforced. The multi-media first aid course should be given by a qualified instructor; certification is available to the Trainees.

Note: During each procedure, an emphasis should be placed on the potential application of first-aid techniques in another culture, within the existing cultural norms of modesty, sex roles, and appropriateness of assistance. It is important to stress that some techniques, such as resusitation, may be construed as "godly" acts of restoring life; if efforts fail, the rescuer may be held responsible. These issues, along with questions and comments about procedures, should be discussed at the end of each unit.

Procedure

1. (20 minutes) A short talk and discussion are presented on the definition of first aid, and should include the following information:

First aid, by definition, signifies the first response or assistance that is provided or offered to a sick or injured person; it does not necessarily represent long-reaching medical attention, nor is it always the only course of action that will be taken in cases of illness or injury. There are implications of helping in another culture that are important to understand *before* offering help, no matter how well-intentioned. (The Trainer may ask for examples from the Trainees' experiences, or provide an illustration such as the following):

A PCV was driving the badly-dented local Peace Corps vehicle, and noticed a crowd of indigenous people in the middle of the highway. She pulled over to the side of the road, walked over to the crowd who were standing over a still and bloody man. She went towards the man to see if he was alive, or in need of first aid, but a hand reached out and grabbed her wrist; she was told that the man could not be touched until the police came. A woman was wailing, and others in the crowd began to yell; it looked as if there had been drinking before the accident. Another person told the PCV that if she touched the man, she would be considered responsible for the death, since the driver of the car that hit him had kept on going. The Volunteer glanced at the dented, lopsided Peace Corps truck and realized that, to anyone coming upon the scene, it appeared that her vehicle had been damaged by hitting the man. She quickly walked to the truck and drove away, shaking slightly, wondering what might have happened had she remained at the scene.

(At this time, the Trainer may encourage questions and some discussion; however, comments should be short, and the topic explored again throughout first aid training.)

It is important to realize that the role of the PCV is not one of "barefoot doctor" or medical professional. However, in order to help oneself, as well as others, one must understand basic bodily functions. Otherwise, it is impossible to recognize and differentiate between various degrees of injury or illness. For example, it is necessary to learn that head cuts bleed profusely, even though damage may be minimal; that diarrhea is seldom fatal when proper steps are taken to rehydrate the ill person; and that fever and chills are a normal physiological response of the body to regulate itself. When the mystery of illness and injury are dispelled, it is easier to understand and provide the appropriate treatment - which may indicate first aid, and perhaps professional intervention.

Fear and panic are fairly common responses to medical emergencies and should not be a source of shame or embarassment. It is not expected that the PCV will become a medical expert. However, through first aid training, one may be able to deal more appropriately with an emergency situation, including an ability to analyze the incident and make intelligent and careful decisions that are helpful to the injured or sick person.

2. (2 hours 30 minutes) Multi-media Unit #1:

- Respiratory Emergencies
- Obstructed Airway
- Heart Attack and Stroke
- Bleeding and Wounds
- Shock

SESSION 6
Extension / Demonstration of Technical Concepts: Thermosyphon

Time: 3 hours

Interim Objective: The Trainee will demonstrate a clear understanding of the thermosyphon concept by means of a prepared extension session in which technical information is adequately communicated to a group of non-literate and/or non-technically oriented villagers role-played by peers, and in which a variety of appropriate extension skills are utilized.

Overview: After an introduction concerning methods of communicating with non-literate people, the concept of thermosyphon is presented to the Trainees. In order to develop an understanding of the principles involved, they assemble and experiment with a small-scale model of a solar water heater. Then, in order to improve extension skills, the Trainees prepare and present short demonstrations to graphically explain a full-scale model of a thermosyphon water heater. The presentation serves as the basis of a discussion about the difficulties and skills involved in the cross-cultural communication of technical information.

Suggested Resources

Fugelsang, Andreas, *Applied Communication in Developing Countries.*

Hall, Edward T., *Beyond Culture*, N.Y.:Doubleday, 1976.

"Solar Model Water Heater", Energy Education Project, 1776 University Ave., Honolulu HI 96822.

Attachment IV-6-P : Plans for model solar water heater

Materials Needed: Model flat plate collector, 4 meters of clear plastic tubing, 6 hose clamps, 2 4-liter plastic containers, 2-3 thermometers, newsprint, hypodermic syringe, colored dyes (electric heat lamp as optional heat source).

Procedure

1. (15 minutes) The Trainer states the objective and planned activities for the session, then gives a short talk about methods of communicating technical information to non-literate people. The following talk is an example:

"I hear, I forget
I see, I remember
I do, I understand"

quote...Confucious

Traditionally, people have transmitted information through

Previous Page Blank

the spoken word, visual demonstration, and actual practice. As community facilitators in a foreign culture, we often encounter difficulties and barriers to our normal modes of communication. In addition to an unfamiliarity with verbal language, we are also faced with differences in symbolic language, or in cultural "cues". Visual forms of communication, common --and effective-- in our society, often have a different meaning (or none at all) to people from other cultures, especially if they are non-literate.

An example that illustrates the problems of cross-cultural communication is the story of The Tse-tse Fly:

> An agricultural extension worker was lecturing to a group of cattle farmers about the dangers of the tse tse fly. For that purpose he had brought along a teaching aid which is commonly in use all over the world, namely, a model of a tse tse fly, about a half a yard or so in length. After the lecture he was met with this comment from a sober member of the audience: "It may be true what you say about this disease on cattle, but it cannot concern us, because the flies are not so big in our district."
>
> Beware of your own reaction to the story. If you find it intriguing, there is hope. But if you find it just laughable, you had better get out of the communication business. (From Fugelsang, p. 13.)

In this session, we will examine some of the problems that arise when an attempt is made to describe a technical concept to informally educated, non-literate people. We will also look at some possible ways of providing appropriate means to understanding.

2. (15 minutes) The Trainees read Fuglesang, pp. 78-86.

3. (5 minutes) The following talk may be given to introduce the concept of thermosyphon:

> When heated or cooled, liquids and gases change density: when heated, almost all expand, becoming less dense; and when cooled, they contract, becoming denser. Consequently, warm air or water rise as cooler parts sink. This explains why heat sources are placed underneath the object to be heated: for example, a burner is placed below a cooking pot, and an electric element is located at the bottom of a water heater. Conversely, in cooling devices, a source of cold is usually located at the top: for example, the freezer compartment in a refrigerator is often at the top, and an open-top supermarket cooler or freezer works because there is a "pool" of cool, dense air that remains despite the open top.

In a closed thermosyphon system, the warmer, less dense liquid or air rises, and the cooler portion sinks; a thermal circulation results, and allows the heat to be utilized, or stored at the top of the system. Although the concept seems simple, it may be difficult to communicate to others in another culture, especially if they are not technically oriented, or are not formally educated. As the assigned readings indicate, both verbal and graphic "cues" and language may be easily misunderstood when the community facilitator is not sufficiently aware of the local subtleties and significances of words and symbols.

4. (50 minutes) The Trainees assemble the model solar water heater, according to the plans (Attachment IV-6-P) and conduct basic experiments to give them a clear understanding of thermosyphon principles.

Note: It is suggested that there be at least enough models for each group of 3-4 Trainees.

Possible experiments include:

Introducing dyes to the system.

Varying the level of the water storage tank in relation to the flat plate.

Increasing or decreasing the heat source, and recording temperature changes.

Constricting the water lines, or adding air to the system.

5. (30 minutes) The Trainees form small groups of 3-4 to prepare a demonstration of the principles of thermosyphon to a group of villagers (role-played by other groups of Trainees). Half the small groups should be directed to utilize only schematic diagrams to explain the demonstration; the other groups should use only the solar water heater model. The following guidelines should be used in preparing the demonstration:

Non-technical language must be used.

Examples with which rural people are familiar are encouraged (e.g. smoke rising, warmer water on the top of a lake, etc.)

The audience is invited to participate.

If drawings are used, they must be simple, easily understood, and not dependent on culturally specific symbolism.

6. (1 hour) Each group gives a demonstration to the rest of the Trainees, who role-play villagers. After the presentations, there is an evaluation and discussion, focusing on the following questions:

Which methodology seemed to work best? Why?

What was the most difficult aspect of the activity?

How "technical" need the session be?

Were the concepts of thermosyphon adequately expressed? Would a rural villager understand the demonstration?

What other techniques could have been used to enhance the session?

What non-verbal forms of communication used were unique to our culture?

What type of demonstration was the most difficult to prepare? To deliver?

SESSION 7
Solar Water Heating: Presentation and Analysis of Data

Time: 1 hour

Objective: Same as for *Session 3*

Overview: An analysis of the data obtained through the water usage experiments is followed by a discussion of the information required to determine need, size and cultural compatibility of solar water heaters.

Materials Needed: Chalk, chalkboard or large sheets of newsprint, markers.

Procedure

1. (25 minutes) On a facsimile of a data sheet (drawn on chalkboard or newsprint), the Trainer compiles data from each small group, encouraging comments concerning the differences and similarities in findings. (Average volumes and temperatures will likely be similar for all groups, unless there has been a wide variance in assumptions.) An examination of assumptions and calculations follows, us ng the data collected to arrive at average volumes and temperatures of hot water needed per day. There may be a brief discussion of the experiments, including any problems or insights that occurred.

2. (15 minutes) In small groups, the Trainees discuss the reasons for data collection, and how it may be used for determining water heater size. Some points to consider are:

   -other areas of water usage
   -cultural factors influencing water usage
   -temperature variations
   -differing water demands, both within the U.S. and various countries

3. (20 minutes) The Trainees generate and discuss important questions to be addressed before implementing a solar water heating project in a rural community. Some examples are:

   How is water perceived in the culture? Is it a healing or magical agent? A disease vector?

   What are the perceptions concerning hot water? Is its use restricted to sick people or specific circumstances?

   What are the bathing customs? How often and at what time of day do people bathe, and in what temperature water?

   How is body cleanliness perceived?

   Is there prestige connected with having hot water?

Are there beliefs that may restrict the use of certain materials or colors? Are shiny surfaces or objects the source of local beliefs?

Do locally available insulation materials have other priority uses (e.g. as food or fuel) in the community?

SESSION 8
Developing and Using a Sizing Formula

Time: 2 hours

Interim Objective: Given hot water volume and temperature requirements, insolation data, and incoming water temperatures, the Trainee will determine the number and size of tank(s), and the amount of glazing aperture required to theoretically satisfy the above parameters.

Overview: The Trainees participate in the development of a sizing formula for a passive solar water heater, and using various sizing formulas in practical problem-solving exercises, gain expertise in the application of sizing principles to meet water heater specifications.

Suggested Resources

Attachment IV-8-Q : How to Size a Flat Plate Collector

Attachment IV-8-R : How to Pressure Test a Plumbing System

Attachment IV-8-S : Direct-Gain Sizing Problems

Attachment IV-8-T : Flat Plate Sizing Problems

Procedure

1. (5 minutes) The Trainer introduces the session and explains the procedures for the formula development.

2. (1 hour) Formula Development: The following terms are written on a chalkboard or newsprint, and are defined:

Solar water heater glazing aperture (the area of glazing facing the sun)

Hot water volume requirement (the amount of hot water in any given day).

Change in temperature (the number of degrees the water must be heated; or the desired water temperature, minus the incoming water temperature).

Insolation rate (the amount of heat, in the form of sunlight, falling on a given area over a given amount of time).

Percent possible sunshine (the calculated amount of sunshine during a given amount of time).

System efficiency (the amount of heat delivered from an energy conversion system, divided by the amount of heat available to that system).

The Trainer initiates a discussion leading to the development of the collection aperture formula. Questions to be asked include:

If twice as much volume is required, will the collector need to be larger or smaller? By how much?

If a greater change in temperature is required, will the collector need to be larger or smaller? By how much?

If the insolation rate is doubled, will the collector need to be larger or smaller? By how much?

If the system's efficiency is doubled, will the collector need to be larger or smaller? By how much?

When the Trainees have answered the questions correctly, and appear to understand the principles involved, the formula for collection aperture may be developed. The Trainer guides the Trainees through the steps of establishing the formula by demonstrating the following:

If the collection aperature is the desired quantity to be found, it is placed on the left side of the equation sign:

$$\text{Collection aperture} = \underline{\qquad\qquad}$$

If the hot water requirement is doubled, then the collection aperture must also be doubled; and the equation looks like this:

$$\text{Collection aperture} = \underline{\text{volume}}$$

If the desired change in temperature is doubled, then the collection aperture must also be doubled; the equation will then look like this:

$$\text{Collection aperture} = \underline{\text{volume x change in temperature}}$$

If the insolation rate is doubled, then the collector aperture must be halved; the equation then reads:

$$\text{Collection aperture} = \frac{\text{volume x change in temperature}}{\text{insolation}}$$

If the percent possible sunshine is doubled, the collector aperture must be halved; the equation becomes:

$$\text{Collector aperture} = \frac{\text{volume x change in temperature}}{\text{insolation x percent possible sunshine}}$$

If the efficiency of the collector system is doubled, the collector aperture must be halved, so the equation finally reads:

$$\text{Collector aperture} = \frac{\text{hot water volume requirement x change in temperature}}{\text{insolation x percent possible sunshine x system efficiency}}$$

3. (30 minutes) The Trainer demonstrates how various numbers may be used in the formula to ascertain the required collector aperture:

For example, if a family requires 160 liters of hot water per day @ 45°C, and the incoming water is at 20°C, the insolation rate is 5500 Kgcal/m^2 per day, the possible sunshine is 80%, and the system efficiency is 40%, it may be shown that the above requirements can be met by a collector aperture of $2m^2$.

If a small calculator is available, the Trainer may ask for other variables, e.g. changes in requirements, temperatures, insolation rates, percentages of possible sunshine, and percentages of efficiency. The formula is used as many times as necessary for the Trainees to understand the procedures.

4. (25 minutes) The following attachments are distributed, and briefly explained: Attachments IV-8-Q, R, S, and T. Attachments S and T are to be turned in at a later date.

SESSION 9 (See *Session 5*)
First Aid

Time: 1 hour 45 minutes

Objective and Overview: See *Session 5*

Procedure (from the Multi-media Standard First Aid Course, ARC)

Multi-media Unit #2:

- Poisoning
- Burns
- Bandaging
- Head, Internal, and Gunshot Injuries

Previous Page Blank

SESSION 10
Plumbing a Solar Water Heater

Time: 2 hours

Interim Objective: Given an incomplete plumbing schematic showing the water source, the water heater tanks, and the point of end usage, the Trainee will complete the schematic, noting the size of all pipes, fittings, and valves so that when complete, the system will be properly installed at minimum cost and complexity.

Interim Objective: Given a situation where no pressurized water system is available and materials are extremely limited, the Trainee will divise a plumbing system that reaches from the water source to the water heater and finally to the area of end use.

Overview: The Trainees discuss the process of plumbing a hot water system and examine a variety of plumbing fittings, both of manufactured and alternative design. The Trainees complete and then discuss the plumbing schematic for a pressurized water system. Next they devise a plan for connecting a non-pressurized system, discussing the problems involved with limited plumbing materials and water resources.

Suggested Resources

Anderson, Bruce, *The Solar Home Book*, pp. 209-226.

Village Technology Handbook, Volunteers in Technical Assistance, Mt. Rainier, MD; pp. 86-91.

Burton, John, *Passive Solar Water Heater Plans*

Attachment IV-10-U : Plumbing Schematic Worksheet

Materials Needed: A variety of plumbing supplies, including valves, pipes, clamps, and other fittings for galvanized, PVC, and copper plumbing; alternative materials for water transport may include bamboo, wooden or metal troughs, and various connectors and sealers (see *Village Technology Handbook*, pp. 86-91).

Procedure

1. (5 minutes) The Trainer distribues the plumbing schematic (Attachment IV-10-U) and explains the procedure for its completion (see *Interim objectives*).

2. (15 minutes) The sample pipe fittings and alternative materials are passed around; then the Trainees discuss the possible uses for them, keeping in mind the need to conserve materials to limit cost and complexity of the plumbing system.

3. (30 minutes) Groups of 3-4 Trainees complete the plumbing schematics, making sure to include all needed parts, and still keeping the cost of the system to a minimum.

Previous Page Blank

4. (20 minutes) Each schematic is presented to the larger group for evaluation. The Trainees are asked to make suggestions as to how they would simplify the system, or include additional components.

5. (30 minutes) The Trainees return to their groups to devise another plumbing scheme based on the following information (Note: this plan should be drawn on large-size newsprint):

End use - shower

Type of heater - breadbox

Water source - a stream running 50 meters away and at a higher level

Available materials - bamboo, wood, rags, rubber

6. (20 minutes) The larger group evaluates the plumbing scheme considering the following points:

Are the fittings properly placed?

Are the lines as short as possible?

Does the system have drain-down capabilities?

Is the system pressurized? Can it realistically withstand pressure?

Are there viable alternatives to these systems?

SESSION 11
Water Heater Design: Group Problem Solving and Consensus Decision Making

Time: 4 hours

Interim Objective: The Trainee will design a low-cost, passive solar water heater to meet specified operational and size requirements.

Overview: Following a review of the problem solving model, OFPISA, the participants brainstorm solar water heater designs. When they agree, by consensus, on a design, they draw final plans and compile a complete list of necessary materials. The session ends with an evaluation of the process of problem solving and group dynamics.

Suggested Resources

"Breadbox Designs", Jeff Reiss and David Bainbridge, *Alternative Sources of Energy*, October 1978, pp. 16-21; 46-47.

Suntray: Design and Development of a Passive Solar Water Heater, Report, Jonathan Hammond, Living Systems, Winters, CA.

"Breadbox Plans, Steve Baer, Zomeworks Corp. New Mexico.

Procedure

1. (15 minutes) The Trainer briefly outlines the activities and reviews the problem solving model, OFPISA (see *Phase I, Session 12*).

2. (30 minutes) The Trainees divide into 3-4 person construction groups (preferably according to region or country assignment). The groups devise hypothetical situations in which they, as Peace Corps Volunteers, might be constructing a solar water heater. Based upon the latitude of the training site, they will determine:

   -hot water volume needed and temperature change requirements
   -insolation
   -percent possible sunshine
   -type of water source
   -system efficiency
   -end usage

3. (1 hour) The Trainer hands out a variety of simple solar water heater drawings and plans as examples (see *suggested resources*). Each group brainstorms as many solar water heater configurations as possible that meet the pre-determined requirements of water quantity and temperature. Variations in the design may include:

   -materials
   -shape, volume, and number of tanks
   -size and shape of box
   -quantity and type of insulation material

-reflectors
-plumbing schemes

The idea is to generate many and different designs, each on a separate piece of paper for review.

4. (30 minutes) The Trainees select, by consensus, the best design or the best design components to be used for the heater they will build. This design must be submitted to the Trainer for review, acceptance, and/or modifications before performing the next step. The Trainer assesses the various designs on the basis of the following criteria:

- design feasibility -- can it be built within 30 hours and will it work efficiently?
- low cost
- insulation
- appropriate aperture size and tilt (latitude $\pm 10^{\circ}$)
- minimum interior air space
- adequate but simple plumbing
- simplicity of construction -- minimal need for high skill input, e.g. metalworking
- minimum but adequate material usage
- ease of maintenance and repair.

5. (1 hour) When each group has decided on a final design and it has been approved, detailed plans are drawn of the design specifying the dimensions of all components. Then a comprehensive materials list is prepared specifying the number and size of all necessary parts.

(As an optional exercise the available materials may be "priced" according to their relative cost and availability in proposed Peace Corps sites and a limit set for the amount the Trainees may spend.)

6. (30 minutes) Each group evaluates the problem-solving exercise, using the following guidelines:

What roles did group members play (leader, observer, passive or active participants, etc.)?

What type of decision making techniques were used? Which worked best?

How could the process have been improved?

Was each participant satisfied with the design? Did they understand the final design?

What conflicts surfaced in the group? Were they resolved? How?

7. (15 minutes) In the larger group, the Trainees discuss the relevance of this form of group decision making in working with rural communities.

SESSION 12 (See *Session* 5)
First Aid

Time: 1 hour 45 minutes

Objective and Overview: Same as for *Session* 5

Procedure (from the Multi-media Standard First Aid Course, ARC)

Multi-media Unit #3:

- Eye Injuries
- Infection, Tetanus
- Splinting Fractures
- Sprains and Strains
- Fainting, Epilepsy
- Heat and Cold Ills

SESSION 13
Shade Mapping and Site Selection

Time: 2 hours

Interim Objective: Given a compass, a protractor, and a plumb bob, the Trainee will develop a shade map to determine whether a potential site receives sufficient and unobstructed sunlight to serve as a location for a solar energy device.

Overview: The Trainees locate a potential solar site and plot a shade map which graphically describes the direction and height of all solar obstructions at that spot. By superimposing the monthly paths of the sun, it can be determined whether the site receives unobstructed sunlight during the main hours of insolation throughout the year. On the basis of this map, the Trainees decide on the suitability of a particular site for the installation of a solar energy device.

Suggested Resources

Mazria, Edward, *The Passive Solar Energy Book*, pp. 325-327.

Attachment IV-13-V : Finding Azimuth

Attachment IV-13-W : Finding Altitude

Attachment IV-13-X : Plotting Azimuth and Altitude

Procedure

1. (1 hour) Each Trainee is given a shade map sheet, a compass, a protractor, and a plumb bob. In groups of 2-4, each person then develops a shade map for at least one potential solar site, by finding the azimuth and altitude of each potential solar obstruction.

After locating a potential solar site, each group of people places the compass on a stake, or on the ground, and rotates the compass body the correct number of degrees to find true north and south, compensating for the magnetic declination of the training site (Attachment IV-1-A).

By siting across the compass face, each person then determines the azimuth (true compass direction, in degrees) of each possible solar obstruction, and notes it on the data sheet.

The following information should be given to facilitate finding the altitude of each obstruction: Attach the plumb bob to the center of the protractor. Site across the base of the protractor to the top of the obstruction from the potential location of the solar collector, making sure to site from ground level (if the collector will be located at ground level). Have another person in the group read the *difference* between 90° and the plumb bob lines. This *difference* is the altitude of the obstruction.

Previous Page Blank

By locating the point defined by the azimuth and altitude on the data collection sheet, each obstruction is then graphed.

2. (30 minutes) After each obstruction has been plotted on the data sheet, the sun paths should be superimposed for each month, fall through spring.

Note: If the data sheet is made using the same scale as the sun charts used during training, the sun paths can be easily traced onto the data sheet.

The sun paths and obstructions are examined to determine whether the site is potentially suitable for solar application. The site is considered worthwhile if it receives full sun from at least 10 A.M. to 2 P.M. during the wintertime, although 6 or more hours of sunlight per day are optimal.

On the data sheet, the Trainees should note the suitability and location of the assessment site.

3. (30 minutes) Each individual group reports findings and conclusions to the others, locating the assessed site on a map drawn on the chalkboard. The Trainees are asked to define and list the properties of a good solar site and how it can be easily recognized. The lists are collected for later evaluation, to be based on the criteria established in this session.

SESSION 14
Site Preparation and Acquisition of Materials

Time: 4 hours

Interim Objective: The Trainee will prepare a site for a solar water heating system, by constructing a strong, level, and properly oriented foundation of the correct dimensions.

Interim Objective: The Trainee will conduct an analysis of the source and relative availability of materials, including implications for low-cost construction in resource-poor countries.

Overview: This session provides the Trainees with the opportunity to discuss and analyze the importance of using locally-appropriate materials. Before beginning the construction of a foundation for the solar water heaters, the Trainees examine the relative availability and cost of various imported building materials, compared to locally-made, recycled and often less-expensive supplies. Based on that information, they revise their lists of required materials so that low-cost, appropriate supplies are used in the construction of each device.

Suggested Resources

List of locally-available and unavailable materials specific to the training site.

Attachment IV-14-Y : Diagram of Foundation

Materials Needed: Cinderblocks, concrete footings, slab rubble, bricks, or other suitable foundation material; shovels, pointed and flat; level (2', 4' line, or torpedo); straight board (5 cm x 10 cm x 2 m); string; tamp (5 cm x 10 cm x 1 m board or equivalent); compass.

Procedure

1. (5 minutes) An overview of the session is given, and should include a brief talk concerning the importance of using locally-appropriate materials, and of obtaining all necessary supplies before beginning construction.

2. (1 hour) Using the local materials availability checklist (to be developed by the training staff for the local training site), and individual lists of materials (prepared in *Session 11*), each work group assesses the availability and appropriateness of construction supplies at the training site or local community. Based upon the assessment conclusions, both the designs and materials are revised, if necessary, in order to reduce cost without appreciably diminishing quality. The Trainer should review the revised materials lists, and the design modifications to ascertain that the proposed design is still feasible.

3. (1 hour) Using the revised materials lists, the groups assemble the necessary construction supplies for the foundation and the solar water heater, then set them aside in a storage area.

4. (1 hour 40 minutes) The groups prepare the foundation for the water heater (Attachment IV-14-Y). The following instructions should be given before construction is begun:

> The material used for the foundation should be buried firmly in the ground to prevent settling. If the water heater box is made of wood, the top of the foundation should be high enough above the ground level (at least 15 cm) to discourage termites and prevent rotting. The outside dimensions of the foundation should be equal to, or slightly smaller than that of the water heater, in order to provide full support. A string and a directional compass may be used to orient the sides of the foundation exactly true east-west / north-south (see plan in Attachment IV-14-Y). The top surfaces of all the footings should be smooth and level, so that the box will rest solidly on all four footings. This may be done by using the level and a straight board or string. When complete, the foundation should be well tamped to ensure its rigidity.

5. (15 minutes) Site cleanup.

SESSION 15 (See *Session 5*)
First Aid

Time: 1 hour 30 minutes

Objective and Overview: Same as for *Session 5*

Procedure (from the Multi-media Standard First Aid Course, ARC)

Multi-media Unit IV:

- Specific EM Situations
- Emergency Rescue

b. Build the wall interiors (studs, sills and headers) on level ground, or on the insulated base, stand them up in place, and attach them to the base.

c. Attach the exterior skin (plastic, tarpaper and plywood, siding, or alternative material) to the outside of the walls, covering the exposed edge of the base to make the assembly weather-tight.

d. Insulate the walls carefully with available materials, such as straw, newspaper, fiberglass, rock wool, etc. Add a continuous vapor barrier to the inside of the insulation, to effectively reduce infiltration. (In very dry climates, the vapor barrier is unnecessary.)

e. Apply the interior skin of the box, covering the vapor barrier and insulation.

f. Paint or weatherize the interior of the box, using a dark color; the outside may be painted any color desired.

g. Construct a glazing assembly from clear glass, clear, flat, high-quality fiberglass, or clear plastic to cover the solar collecting window of the box. The glazing assembly should be built so that it may be removed, since it will provide access to the tank(s) or pond(s).

3. (15 minutes) A discussion and evaluation period are provided. Members in each group should consider the following questions:

- Do all members feel that they are sharing equally in the responsibilities?
- Is everyone certain about the sequence of tasks to be completed?
- Does everyone understand the reasons for and methods of performing the tasks?
- Are group members satisfied with the group's progress?

4. (3 hours 30 minutes) Construction work resumes, and groups continue working on the enclosure.

5. (15 minutes) The session is evaluated by each group. In construction groups, members share observations and insights about the interactions and process of working together. The following questions should be addressed:

What was the approach to problem-solving? Were problems and conflicts resolved?

Did each group member feel that individual comments and suggestions were respected by everyone else?

6. (15 minutes) The site is cleaned, and tools and materials are stored.

SESSION 16
Construction of the Water Heater Enclosure: Part I

Time: 6 hours

Interim Objective: Given the proper tools and materials, the Trainee will construct an enclosure for a solar water heating system, according to the specified design requirements of strength, insulation ability, and size.

Overview: The Trainees determine a suitable plan and sequence for building the enclosure for a solar collector, and begin construction. During the session, an on-going analysis and evaluation of the group process occurs, and suggestions for improving cooperation and interaction are incorporated into each group's work plan.

Materials Needed: Hand tools and supplies as necessary for individual designs.

Procedure

1. (30 minutes) With the Trainer's assistance, the members of each work group determine the sequence in which they will construct their water heater. Although the procedures will vary according to individual designs, the general order is as follows:

   - the support system and/or insulated base
   - the interior wall members (studs)
   - exterior skin
   - insulation
   - interior skin
   - weatherization
   - glazing assembly

   During this time, members of each group plan the way in which they will work together to accomplish the enclosure construction in the allotted 14 hours.

2. (1 hour 15 minutes) Construction is begun on the enclosure.

   Note: Since the designs used for the water heaters may vary, depending upon available materials, region of projected use, or other factors, both this session and *Session 18* may vary from the proposed model. The task sequence that follows is intended to serve as a general guide that may be adapted to individual training programs.

   The Trainees construct the collector box, using available materials and tools, and the following procedures as guidelines:

   a. Construct a well-insulated, weather-tight base or floor to support the weight of the collector tanks (or pond). For a superior job, install a continuous vapor barrier (with no holes; plastic works well) to the inside of the insulation.

SESSION 17
An Exercise in Assessing Community Water Needs and Uses

Time: 4 hours (and some additional time for individual research and report preparation)

Objective: Based upon an understanding of technical information, and using appropriate community assessment skills, the Trainee will assess the water requirements in one aspect of local community life, including implications for environmental, energy, and health concerns.

Overview: In order to integrate technical knowledge about solar designs, water systems, and sanitation, with the skills necessary to apply that expertise, the Trainees conduct an assessment of water needs and uses in a local community. They gather data, then prepare a written report that includes suggestions to improve community water systems and health status, in ways that are environmentally sound, energy efficient, and within existing cultural and economic constraints. The report and the exercise are discussed in a later session.

Suggested Resources

Attachment IV-17-Z : Guidelines for Community Water Needs

Materials Needed: Paper, pens.

Procedure

1. (15 minutes) An introduction to the exercise is presented, and should include a statement and explanation of the objective and overview.

2. (1 hour) Small teams of Trainees (2-4 people are best) discuss aspects of community life (education, health care, residential, support systems, etc.), and decide upon one area for study. The methodology for data collection is decided (e.g. questionnaire, observation, combination of approaches), and tasks are divided among team members. The guidelines (Attachment IV-17-Z) are distributed and teams plan their work schedules.

3. (2 hours 45 minutes) Teams go into the community to begin data collection and analysis.

Note: This activity is best assigned as the last one of the day, so that the Trainees are able to spend as much time as needed in research and report preparation. Before beginning the data collection, Trainees should be told that the reports will be handed in and discussed during *Session 22*.

Previous Page Blank

SESSION 18
Construction of the Water Heater Enclosure, Part II

Time: 8 hours

Interim Objective: Same as for *Session 16*

Overview: During the continuation of the collector box assembly, the Trainees are provided with opportunities to discuss and examine the progress made, both on a technical level and as a functioning, cooperative group.

Materials Needed: Hand tools and supplies for individual design specifications.

Procedure

1. (15 minutes) In work groups, the Trainees plan the day's activities, including job assignments and task sequences.

2. (3 hours 30 minutes) The groups continue working on the water heater enclosure, according to their particular designs (see *Session 16* for the general task analyses).

3. (15 minutes) Individual group members evaluate their progress, and discuss the design modifications being made. The following questions may be used as guidelines:

   As the construction has progressed, what changes have occurred in the original design?

   Are there any modifications that should be made, but cannot be implemented due to a design flaw?

   When it was noticed that a design change was needed, how was the decision made?

   Are there any other changes that may need to be included in the design?

4. (3 hours 30 minutes) The construction activities are resumed, and each group finishes an enclosure. The finished work is evaluated by the Trainer according to the following assessment questions:

   Is the box solid and strong enough to hold the water tank?

   Is it insulated sufficiently?

   Has the enclosure been properly weatherized and sealed?

   Will the proposed tank easily fit within the enclosure?

   Is the enclosure *aesthetically* pleasing?

Previous Page Blank

Are the materials used appropriate for the type of device?

5. (15 minutes) The Trainees evaluate the completed water heater box, including a consideration of the following points:

Was the final product the same as the group members had imagined?

Are group members satisfied with the work?

How could the construction have been simplified? What should have been changed?

Were any earlier group conflicts resolved? How?

6. (15 minutes) The site is cleaned, and tools and materials are stored.

SESSION 19
Water Tank Preparation

Time: 4 hours

Interim Objective: The Trainee will construct, or select, and prepare a water tank for a direct gain solar collector to meet design specifications of shape, capacity, color, strength, and pressure tolerance.

Overview: Based on information provided about various types of tanks potentially useful for solar water heaters, the Trainees review and, if necessary, revise the heater designs. The tanks are prepared, tested, and the finished work assessed.

Materials Needed: Hand tools and supplies according to the particular designs; metalworking equipment.

Procedure

1. (10 minutes) A short talk is given concerning the types of water tanks that are potentially useful for inclusion in a water heating system. The following talk may be used:

> Nearly any vessel that effectively holds water may conceivably be used as a solar water heater, although there are differences in quality. Metal tanks are considered the best containers for breadbox heaters because they are fairly easy to adapt and use. Galvanized tanks are long-lasting, quite strong, non-corrosive, and usually have easily adaptable fittings already attached. Unfortunately, in many countries, galvanized tanks are prohibitively expensive; used tanks often cost the same as new ones. Steel drums, like those used for oil or chemical products, are less strong than galvanized tanks, but are adequate water containers, and may serve for a variety of uses. Although steel drums may be too costly in some regions, they are usually relatively inexpensive, reasonably plentiful, and are available in a number of sizes (the most common size is the 55-gallon drum). However, there are certain disadvantages to the use of steel drums. They will rust, although they may be rust-proofed; they may contain residues of toxic or otherwise dangerous materials; and they are unable to withstand very high internal pressures, common to many municipal water systems. Wooden barrels are not very suitable containers, because they are poor heat conductors, and may not resist prolonged, direct sunlight. Plastic-lined vessels, like those used in the minipond design, are fairly inexpensive, and are easily constructed from a wooden box or a basket lined with plastic sheeting. Plastic, however, has certain drawbacks. There are occasional pinholes, it degrades in the sunlight, and it may melt at high temperatures.
>
> If plastic is used in the minipond system, the direct exposure of the water to the sun's rays could result in a heavy growth

of algae in the tanks; and salt deposits could result from the constant evaporation of water from the open top. Perhaps the most important disadvantages of plastic are its non-renewable nature, and its scarcity and high price in some regions of the world. Ferrocement or ceramic jars are other options for consideration. They are sturdy, fairly inexpensive to make, and can utilize local expertise and materials. Unless used for batch systems, however, the plumbing system may be difficult to adapt.

2. (20 minutes) The designs are reviewed, and the Trainees determine if the proposed tanks are suitable for the types of enclosures to be used, and if the plumbing scheme is feasible. Some questions for consideration are:

Is the tank able to withstand the expected water pressure?

Can the tank (especially the joints, welds, and connections) withstand the design temperatures?

Will the tank require much maintenance? (If metal, will it rust? If plastic, will it melt or degrade in the sun?)

Does the tank contain any toxic material?

Will there be any special problem with the plumbing attachments?

3. (3 hours) The tanks are prepared for installation, using the following guidelines:

If the tank is metal, both inlet and outlet holes should be made, and the plumbing fittings installed. The tank should be blackened with soot or smoke, or painted a flat, dark color (preferably black).

If the tank is a black, plastic lined box, the plastic should be closely checked for pinholes, then carefully placed in the box and secured so that there are no points of excessive stress with the added pressure of water.

Before final installation of the tank, a pressure test should be conducted to see if there are any leaks or weak spots (Attachment IV-8-R: How to Pressure Test a Plumbing System).

4. (15 minutes) With the Trainer's assistance, the Trainees assess the quality of the installation, making sure that the tank is properly painted or blackened, and ready for the plumbing connection. Any problems encountered in the preparation should be discussed, as well as design changes made or suggested for incorporation in future designs.

5. (15 minutes) The site is cleaned and all materials and tools stored.

SESSION 20
Connecting the Plumbing

Time: 4 hours

Interim Objective: The Trainee will install and secure the water tank in the solar collector box, and attach all the plumbing necessary to ensure efficient and trouble-free operation.

Overview: The hot water tanks are installed, the plumbing checked and the entire solar water heating system assessed.

Suggested Resources

Attachment IV-8-R : How to Pressure Test a Plumbing System

Attachment IV-20-AA : Plumbing Scheme for Pressure Systems

Attachment IV-20-BB : Plumbing Scheme for Non-Pressure Systems

Materials Needed: Plumbing tools and supplies depending upon particular designs.

Procedure

1. (15 minutes) With the assistance of the Trainer, the Trainees outline the correct procedures to install the interior and exterior plumbing system. The plumbing scheme should be well understood before beginning installation.

2. (1 hour) The Trainees install the tank(s) in the box, checking that all inlets and outlets are accessible, and that the structure is rigid.

3. (1 hour) After the water delivery system is prepared, the incoming water lines are attached to the collector input; the output is connected to the end use delivery system (the spigot, or nozzle, etc.). If the system is not designed to withstand high pressure, a shut-off valve must be placed up stream from the tank. (Attachments IV-20-AA and BB show several possible plumbing schemes for various heater designs.)

4. (30 minutes) The Trainees water test the system, making sure that:

- there are no leaks
- the system can withstand pressure
- the water flows properly through the system to the end use, according to design.

Note: For the closed pressure designs, the Attachment IV-8-R: How to Pressure Test a Plumbing System, should be used.

5. (1 hour) All the participants, including the Trainer, assess the final solar water heating system according to the following criteria:

Is the system low-cost and simply built?

Are all the components correctly sized, weather-proofed, and plumbed?

Is the system oriented to true south (or true north in the southern hemisphere)?

Does the glazing have a proper tilt?

Are the reflectors functional and properly aligned (if applicable)?

6. (15 minutes) The site is cleaned and all materials and tools stored.

SESSION 21 Cultural Perspectives of Women and Men's Participation in Development (adapted from *Women in Development: A Volunteer Training Resource Book*)

Time: 2 hours

Objective: The Trainee will examine individual perceptions of sex role patterns, and will identify opportunities and barriers that influence the active and full participation of all people affected by the development process.

Overview: In order to understand and articulate the consequences of excluding or ignoring people during the development process, the Trainees must first be aware of various traditional sex role patterns and divisions. In this session, they examine such roles, and then identify barriers and opportunities facing women and men in the development process.

Suggested Resources

Attachment IV-21-CC : Margaret Mead's "A Comment on the Role of Women in Agriculture"

Attachment IV-21-DD : Worksheet on Barriers and Opportunities

Boserup, Ester, and C. Liljencrantz, *Integration of Women in Development*, U.N.D.P.

Materials Needed: Newsprint, markers, pens, paper, tape.

Note: The Mead article should be read prior to this session.

Procedure

1. (5 minutes) A brief statement is made about the purpose of the session.

2. (10 minutes) A short talk is presented concerning the following points:

It is important to be aware of various factors that increase or decrease the appropriateness and effectiveness of development efforts; one crucial determinant is the inclusion or exclusion of people affected by development efforts. It is unfortunate, that based on inaccurate perceptions of traditional sex role patterns, development efforts have too often excluded or ignored the importance of active participation by all people affected -- women, men, and children. Historically, women have been excluded from the assessment of community needs, project design, delivery of technical assistance, and the process of evaluation. Much of the work done in rural areas -- especially work done by women and children -- is not calculated in the GNP, e.g., water carrying, agricultural work, weaving, basketry, etc. Technological

advances traditionally have been offered to men, even when it would have been more appropriate to include women. When women are "moved" into the cash economy, it often signifies a loss in their real (yet uncalculated) contribution to the family and village economic system. The social system is also disrupted by technological "advances". For example, piped water may satisfy certain needs, but ignore other, as important, social needs that may have been met during gatherings at the local well or watering place. In order that development efforts and technological innovations be appropriate, there must be an examination and understanding of traditional roles, and of the barriers and opportunities that influence the active participation of all those affected by change.

3. (20 minutes) The Trainees divide into groups to identify and discuss the roles of women and men (and children, where relevant). Each group discusses one of the following: family life; public life; education; religion; labor and divison of jobs; technology; and health. A recorder should be named in each group to note the roles played by women and men (and children) in that area of life.

4. (15 minutes) Newsprint and markers are distributed to each group, and instructions given to jot down insights, conclusions or generalizations concerning sex role patterns just identified.

5. (35 minutes) The large group reconvenes, and a reporter from each group presents the findings (both role identifications and insights). The conclusions are posted, and some generalizations formed. Examples of possible conclusions and generalizations are:

- certain activities are identified as belonging to one sex
- if a person not of the same sex performs the activities, both sense discomfort
- fixed traditions limit options
- traditions provide stability and role models, but also limit individual and community development
- sex role patterns reinforce the tendency to view the world as either-or, i.e., male or female

6. (20 minutes) Groups form with 2-6 other people of the same sex (If that is not possible, some groups should be assigned to do the exercise from the perspective of the opposite sex.) Worksheets are distributed (Attachment IV-21-DD) so that women will discuss the barriers and opportunities they perceive as relating to men, and vice versa. In each group, people list alone at least 6 barriers/opportunities available to women or men, then share their lists. A recorder from the group should list on newsprint a summary of composite of the barriers and opportunities that the group members have generated. The list should then be posted.

Best Available Document

7. (30 minutes) The large group reconvenes, and examines the group lists. The Trainer may facilitate the discussion by listing, in three columns: shared perceptions, different perceptions, new insights. Some points that may emerge are:

Women face more barriers than men in seeking to participate in the development process.

The barriers include: not being considered in the assessment; not participating in the project design or in decision-making; not receiving technical assistance.

Women's non-cash contributions to the economy are not appreciated or calculated in the GNP.

Barriers to women's (and to a certain degree, men's) participation are deeply rooted in cultural and religious traditions; and any effort to shift sex role patterns has a great impact on all aspects of individual lives and community systems.

Men have carried an inordinate share of the burdens, as well as benefits associated with the development process.

During the group discussion, it should be noted that children play important roles in family and community life, and that they are often overlooked in development efforts. Trainees should begin to examine the barriers and opportunities mentioned in regard to their implications for appropriate technology extension efforts.

Option: The Trainees may be assigned to write a paragraph or prepare a discussion concerning several barriers and opportunities in regard to women's, men's, or children's roles in appropriate technology development projects.

SESSION 22
Food Preparation: Using and Assessing Solar Water Heaters

Time: 4 hours

Objective: The Trainee will incorporate the use of a solar water heater in a demonstration of food preparation, and will discuss the relative merits and disadvantages of solar-heated water.

Objective: Using a solar water heater constructed during training, the Trainee will examine and demonstrate possible uses for solar-heated water during food preparation activities, including pre-heating water, washing dishes and hands, and any other applications that appear culturally appropriate. In addition, the Trainee will monitor and assess the temperature and volume of the solar-heated water used, in order to see if the heater meets established design specifications.

Overview: During this session, technical and practical expertise are integrated. Reports are presented on local community water needs and uses, and the discussion leads to suggested potential uses and limitations for solar-heated water. Based on the ideas generated, each cooking group prepares a snack, using solar-heated water, a Lorena stove, and a pedal powered grinder, then demonstrates the procedures used. During that time, solar water heaters are monitored in order to determine whether they are efficient sources of adequate hot water. An assessment of the heaters and the day's activities end the session.

Suggested Resources

Attachment II-20-Q : Foods List

Attachment IV-22-EE : Monitoring and Assessing Solar-Heated Water Temperature and Volume

Materials Needed: Solar water heaters, Lorena stoves, pedal powered grinders; cooking utensils, firewood, food items, thermometers.

Procedure

1. (10 minutes) An introductory talk is given, presenting the activities and stating the objective. An agenda should be posted.

2. (40 minutes) Each team turns in the report on community water needs / uses assessment (*from Session 17*) and a general discussion follows concerning the conclusions. The Trainer should guide the discussion to address the following questions:

   What are some present and potential uses for solar-heated water in the community?

   What cultural or economic barriers might there be?

   How could solar-heated water improve the health status of the community?

Previous Page Blank

How could women be involved in the use of solar-heated water?

The Trainer should write the potential uses on newsprint. When the other questions have been sufficiently discussed, the Trainer asks for suggestions as to which potential uses might be incorporated into food preparation activities, within the context of various cultural, economic, and health constraints that have been mentioned. Those uses are circled on the newsprint.

Note: During the discussion, there should be a review of the cultural considerations surrounding the introduction of hot water devices (see *Session* 3 of this phase). Some considerations include: usual bathing water temperature is often cool or cold; hot water use may be restricted during certain times of the day, after certain activities, or in specific stages of the life cycle; often, there are local religious or medical rules and customs concerning water temperature; and sometimes unequal status (one person owning a water heater) in a community is a source of problems.

3. (40 minutes) Groups are formed, based upon construction or research teams, and the food lists (Attachment II-20-Q) are distributed. Group members decide on the type of snack they wish to prepare, following the guidelines stated in the food list.

The food prepared should be simple, and not require much preparation or cooking time. (For example, a tea, peanut butter, and crackers may be made.) Preparation should include the use of solar water heaters, Lorena stoves and pedal powered grinders. During this time, the monitoring experiment should also be established (Attachment IV-22-EE), and tasks for food preparation and for monitoring the water volume and temperature should be divided among group members.

4. (2 hours) Food supplies are gathered, and the snacks prepared. The water temperature and volume should be checked every time it is used.

Note: If the water heaters have not been used before this session, they should be emptied prior to this exercise so that the tanks may be flushed out. Also, if the water is to be used for cooking, it should be ascertained that the tanks contain no toxic or dangerous material.

5. (1 hour 15 minutes) Each group joins with another to share the snacks and to present demonstrations of the ways in which solar-heated water has been utilized in the food preparation.

6. (30 minutes) All groups join to share the conclusions of the water monitoring experiments, discuss any problems that may have arisen, and make suggestions for improving the water heating system.

7. (30 minutes) The assessment checklist (Attachment II-20-R) is distributed to each group and answered. It is collected for later evaluation by the Trainer.

8. (15 minutes) All materials are stored, and the site is cleaned.

P H A S E IV: ATTACHMENTS

IV-1-A : Magnetic Declination Chart
IV-1-B : Heliodon Plans
IV-1-C : Passive Solar Design - Interim Objective #1
IV-1-D : Passive Solar Design - Interim Objective #2
IV-2-E : What is a Calorie?
IV-2-F : Energy Unit Conversion Factors
IV-2-G : Energy Transfer Conversion Factors
IV-2-H : Exponential Equivalents
IV-2-I : Approximate Available Energy from Various Sources
IV-2-J : Passive Solar Design - Interim Objective #3
IV-2-K : Passive Solar Design - Interim Objective #4
IV-2-L : Variation of Day-Long Insolation
IV-2-M : Solar Radiation Reaching the Ground
IV-2-N : Greenhouse Effect with Glazing
IV-3-O : Data Collection Sheet
IV-6-P : Plans for Model Solar Water Heater
IV-8-Q : How to Size a Flat Plate Collector
IV-8-R : How to Pressure Test a Plumbing System
IV-8-S : Direct Gain Sizing Problems
IV-8-T : Flat Plate Sizing Problems
IV-10-U : Plumbing Schematics Worksheets
IV-13-V : Finding Azimuth
IV-13-W : Finding Altitude
IV-13-X : Plotting Azimuth and Altitude
IV-13-Y : Diagram of Foundation
IV-17-Z : Guidelines for Community Water Needs / Uses Assessment
IV-20-AA : Plumbing Scheme for Pressure Systems
IV-20-BB : Plumbing Scheme for Non-Pressure Systems
IV-21-CC : A Comment on the Role of Women in Agriculture
IV-21-DD : Worksheet: Barriers and Opportunities
IV-22-EE : Monitoring and Assessing Solar Heated Water Temperature and Volume

Task Analysis: Build a Solar Breadbox Water Heater
Task Analysis: Build a Flat Plate Collector Water Heater

Useful Solar Formulas

MAGNETIC DECLINATION CHART

17 E means that magnetic North is 17° east of true North. This also means that true South is 17° east of magnetic South (see below).

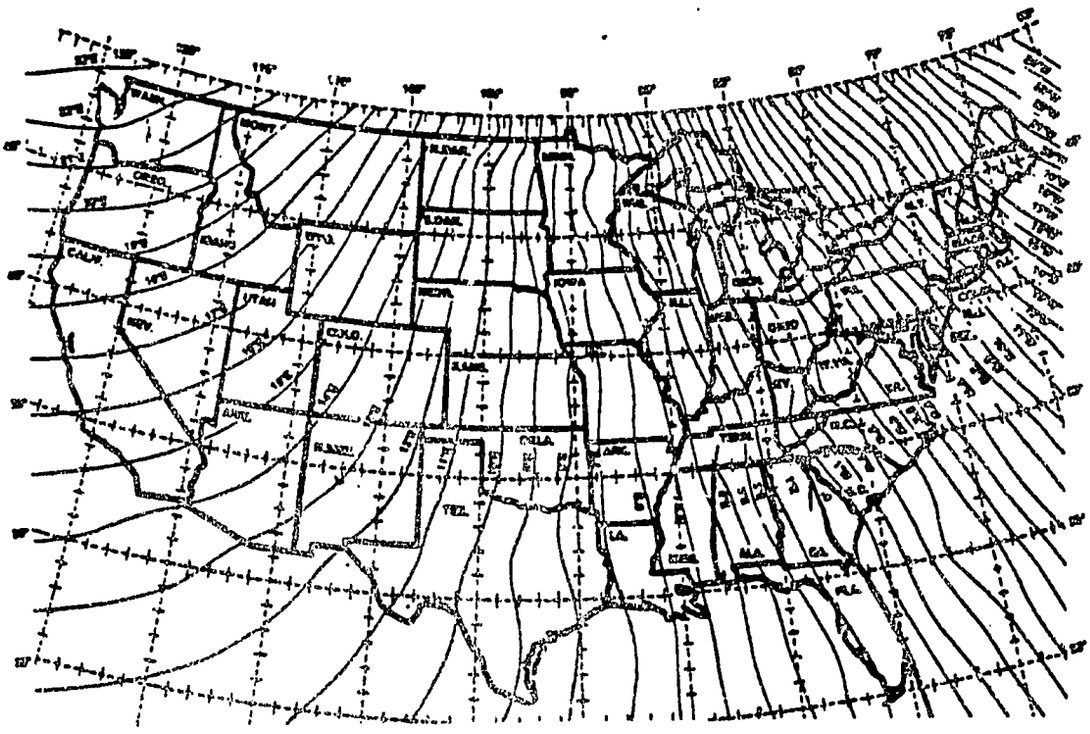

Fig. VI-11: Use map to find sun chart (latitude) closest to your location.

Source: Redrawn from the Isogonic Chart of the United States, U.S. Department of Commerce, Coast and Geodetic Survey, 1965.

Occidental has a magnetic declination of approximately 17° East. Therefore, to find true South, your compass should look like this:

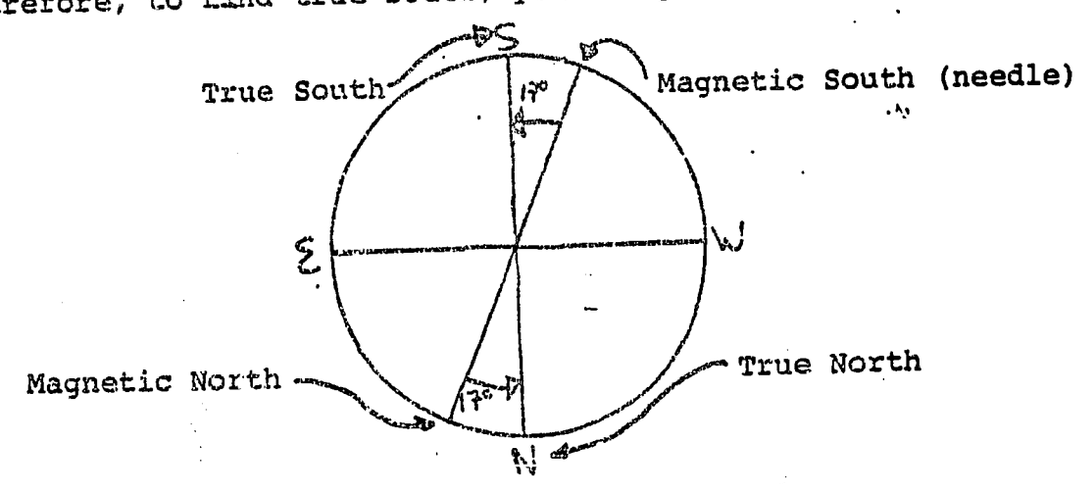

Previous Page Blank

Attachment IV-1-B

HELIODON PLANS

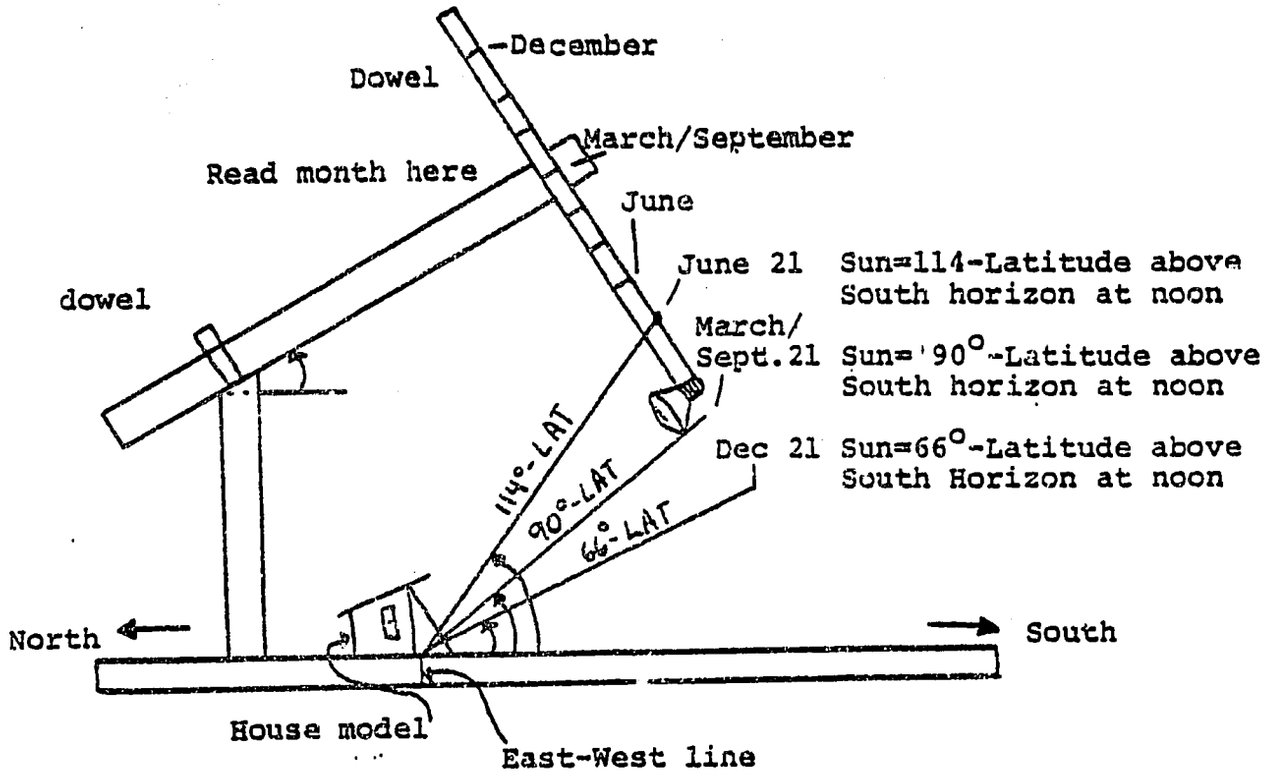

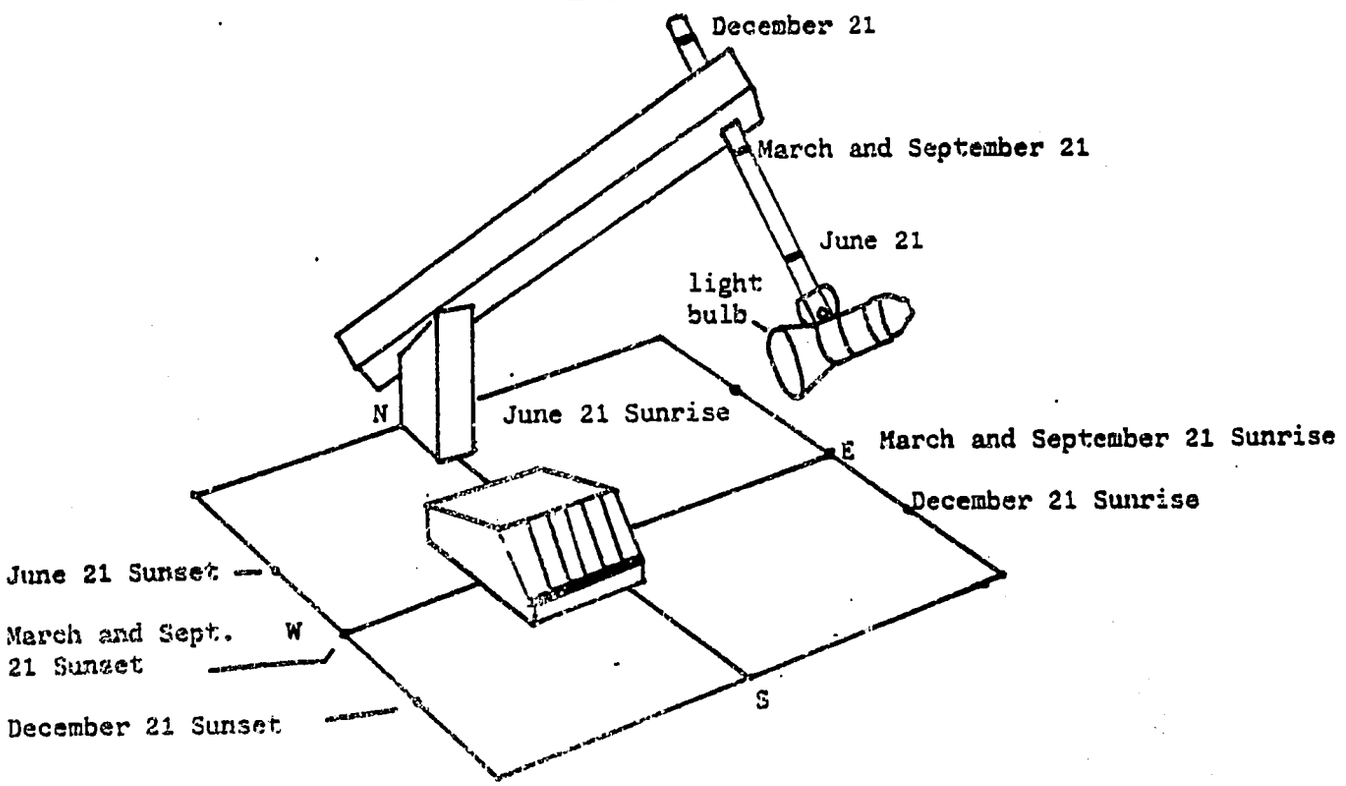

Passive Solar Design Interim Objective 1

Given:	Latitude	0	8	16	24	32	38
	Date:	12/21	3/20	4/10	7/24	6/17	9/30
	Time:	10 am	3 pm	11 am	4 pm	9 am	noon
Find:	Azimuth:						
	Altitude:						

Passive Solar Design Interim Objective 2

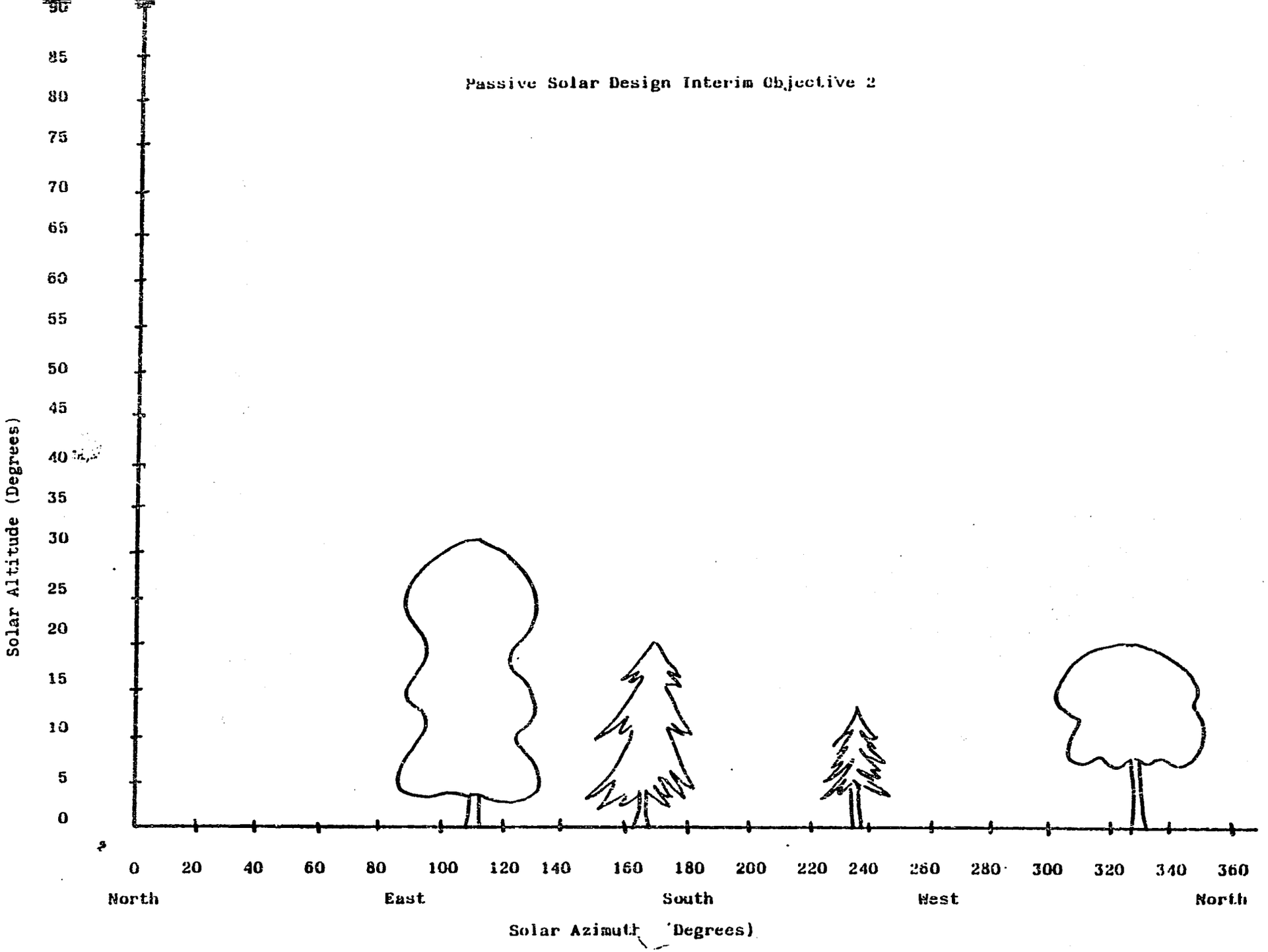

WHAT IS A CALORIE?

The amount of energy needed to raise the temperature of one gram of water one degree celsius (centigrade).

The amount of heat given off when one wooden match is burned completely is equal to 252 calories.

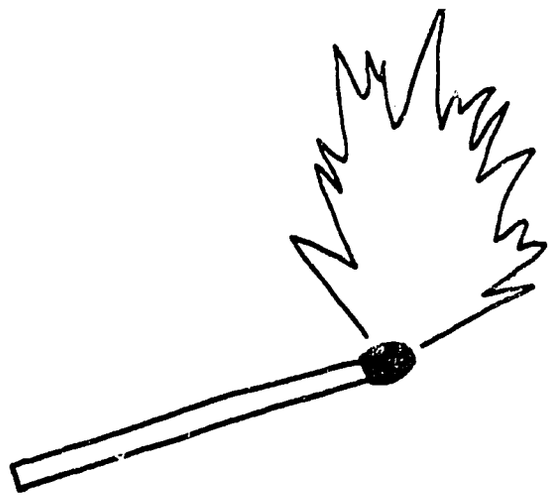

ENERGY UNIT CONVERSION FACTORS

FROM	TO	MULTIPLY BY:
BTU	CAL	2.52×10^{2}
	ERG	1.05×10^{10}
	FT-LBS	7.75×10^{2}
	WATTS	2.93×10^{-1}
CAL	BTU	3.97×10^{-3}
	ERG	4.19×10^{7}
	FT-LBS	3.09
	WATTS	1.16×10^{-3}
ERG	BTU	9.48×10^{-11}
	CAL	2.39×10^{-8}
	FT-LBS	7.38×10^{-8}
	WATTS	2.77×10^{-11}
FT-LBS	BTU	1.28×10^{-3}
	CAL	3.24×10^{-1}
	ERG	1.36×10^{7}
	WATTS	3.77×10^{-4}
WATTS	BTU	3.41
	CAL	8.59×10^{2}
	ERG	3.61×10^{10}
	FT-LBS	2.66×10^{3}

Energy Transfer Conversion Factors

From	To	Multiply By:
$\frac{BTU}{ft^2\ hr}$	$\frac{Kgcal}{m^2\ hr}$	2.7
	$\frac{Kw}{m^2}$	3.154×10^{-3}
	$\frac{Langleys}{min.}$	4.52×10^{-3}
$\frac{Kgcal}{m^2\ hr}$	$\frac{BTU}{ft^2\ hr}$	3.687×10^{-1}
	$\frac{Kw}{m^2}$	1.163×10^{-3}
	$\frac{Langleys}{min.}$	1.667×10^{-3}
$\frac{Kw}{m^2}$	$\frac{BTU}{ft^2\ hr}$	3.171×10^{2}
	$\frac{Kgcal}{m^2\ hr}$	8.6×10^{2}
	$\frac{Langleys}{min}$	1.433

EXPONENTIAL EQUIVALENTS

PREFIX	EXPONENTIAL EXPRESSION	NUMERICAL EQUIVALENT
GIGA	10^9	1,000,000,000
MEGA	10^6	1,000,000
KILO	10^3	1,000
DEKA	10^1	10
DECI	10^{-1}	1/10 OR .1
CENTI	10^{-2}	1/100 OR .01
MILLI	10^{-3}	1/1000 OR .001
MICRO	10^{-6}	1/1,000,000 OR .000001

APPROXIMATE AVAILABLE ENERGY

FROM VARIOUS SOURCES

	BTU'S	GCAL	KGCAL
1 KILOWATT-HOUR	3,413	860,076	860
1 TON OF COAL	2.5×10^{7}	63×10^{8}	63×10^{5}
1 BBL OF CRUDE OIL	5.8×10^{6}	1.46×10^{9}	1.46×10^{6}
1 GALLON OF GASOLINE	1.25×10^{5}	3.15×10^{7}	3.15×10^{4}
1 GALLON OF NO. 2 FUEL OIL	1.4×10^{5}	3.55×10^{7}	3.55×10^{4}
1 CUBIC FOOT OF NATURAL GAS	1,031	2.598×10^{8}	2.598×10^{2}
1 MCF NATURAL GAS	1.031×10^{6}	2.598×10^{8}	2.598×10^{5}
1 THERM OF ANY FUEL	1×10^{5}	7.52×10^{7}	7.52×10^{4}
1 CORD OF WOOD	2×10^{7}	5.04×10^{9}	5.04×10^{6}

Passive Solar Design Interim Objective 3

Circle which terms are or could be used for insolation $\frac{\text{energy}}{\text{area}\cdot\text{time}}$

Langleys/min

W/ft^2/month

ft.lbs./square mile

ft^2/cal/minute

Joules/sec

Joules/m^2

Joules/m^2sec

BTU/ft^2day

miles/Kcal

cal/cm^2min

BTU/in/^oF

m^2/BTU

mW/cm^2

Attachment IV-2-K

Given an insolation meter oriented true south with a 15kg can of water painted a flat, dark color inside a well-insulated shell with 0.20m^2 of aperture, find the Kcal/m^2/day from the following data:

Initial temp. °C	Final temp. °C	Insolation Kcal/m^2/day
20	35	
25	50	
30	50	

VARIATION OF DAY-LONG TOTAL INSOLATION THROUGHOUT THE YEAR FOR SOUTH-FACING SURFACES WITH VARYING TILT ANGLES

(ON THE 21ST DAY OF EACH MONTH).

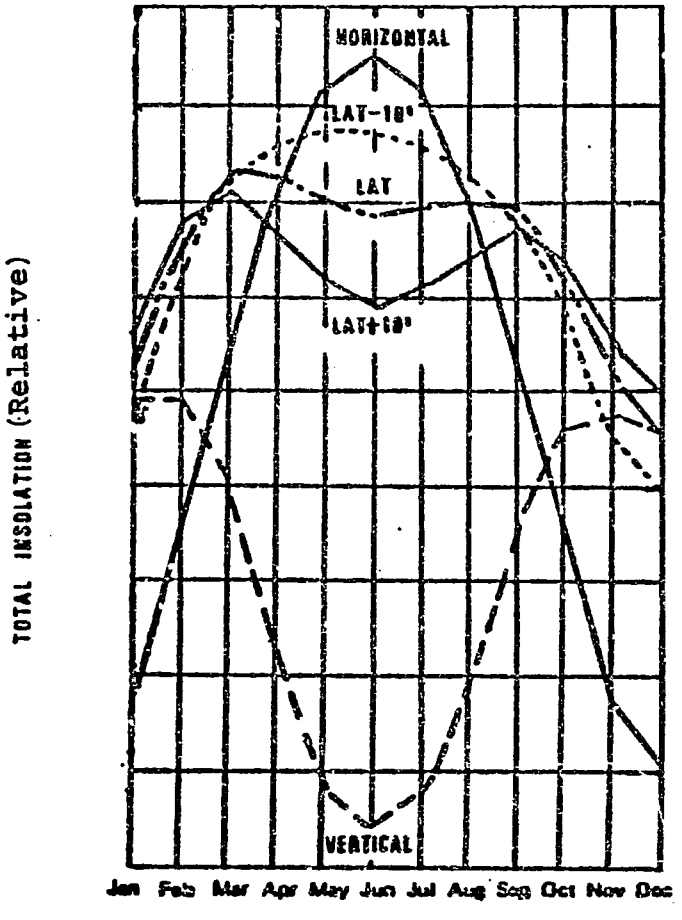

SOLAR RADIATION REACHING THE GROUND

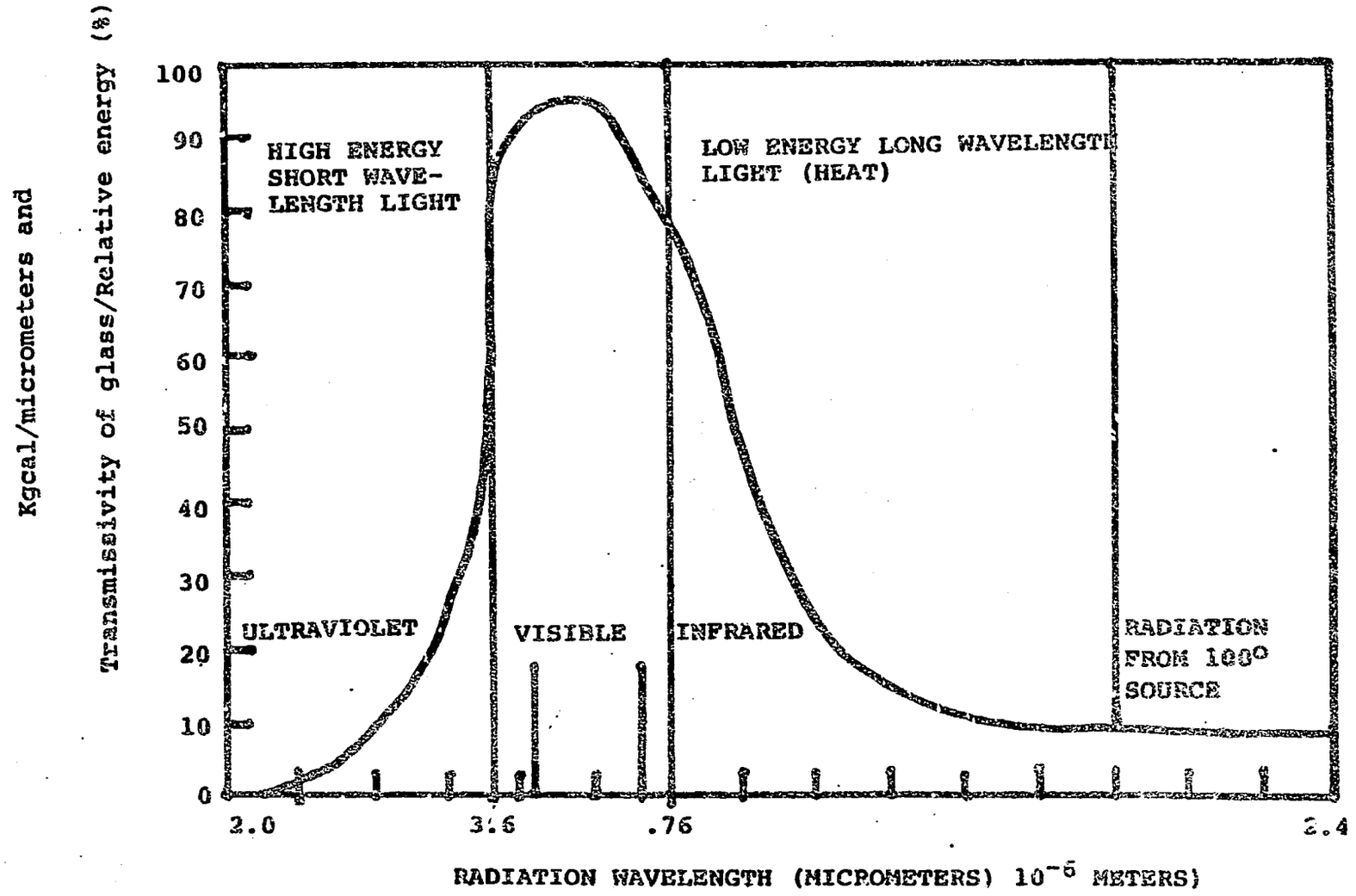

GREENHOUSE EFFECT WITH GLAZING

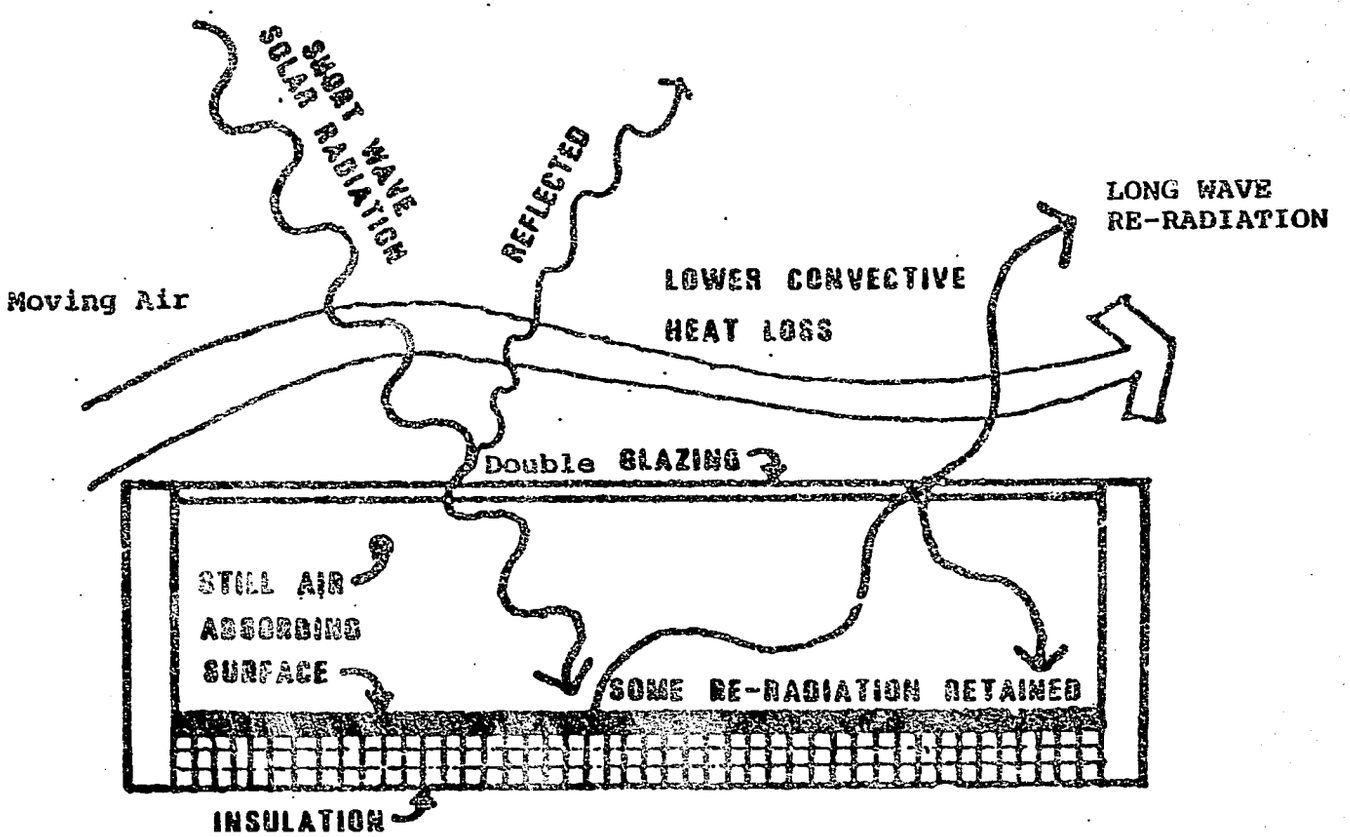

HOT WATER VOLUME AND TEMPERATURES DATA COLLECTION SHEET

Hot Water Use	Volume (liters)			Temperature (°C)		
	minimum	maximum	average	minimum	maximum	average
Hands						
Dish wash						
Dish rinse						
Body wash basin						
Shower						
Other						

Assumptions and calculations

During an average day, how many times (use fractions if necessary) will hot water be used by a family of six in the U.S. for each of the following?

Hands: _____ liters/wash x _____ washes/day = _____ liters/day

Dish: wash _____ liters/wash x _____ washes/day = _____ liters/day

Dish: rinse _____ liters/wash x _____ washes/day = _____ liters/day

Body: wash basin _____ liters/wash x _____ washes/day = _____ liters/day

Shower: _____ liters/wash x _____ washes/day = _____ liters/day

Other: _____ liters/use x _____ uses/day = _____ liters/day

TOTAL volume of hot water per average day

PLANS FOR MODEL SOLAR WATER HEATER

THERMOSIPHON WATER HEATER MODEL

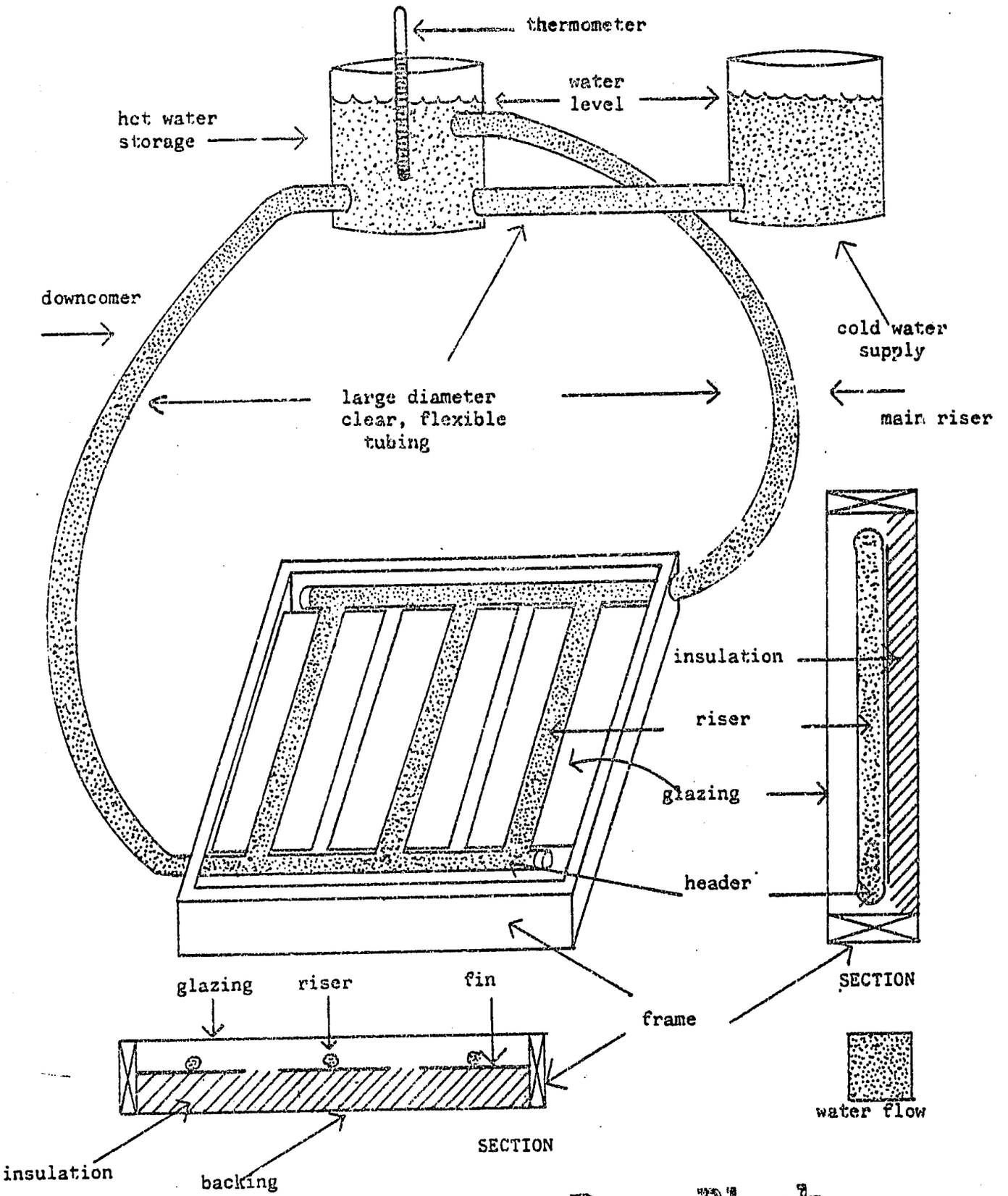

Previous Page Blank

DETAIL OF TUBING CONNECTION TO PLASTIC WATER CONTAINERS

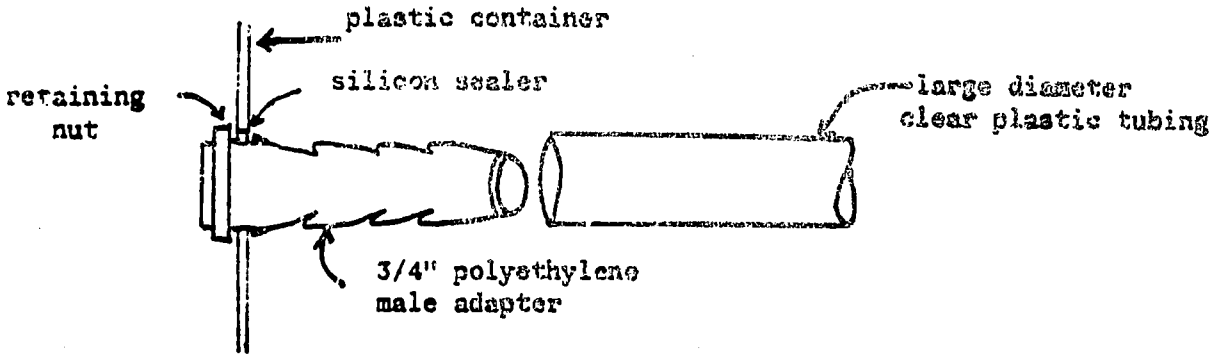

DETAILS AND SECTIONS OF SOLAR COLLECTOR

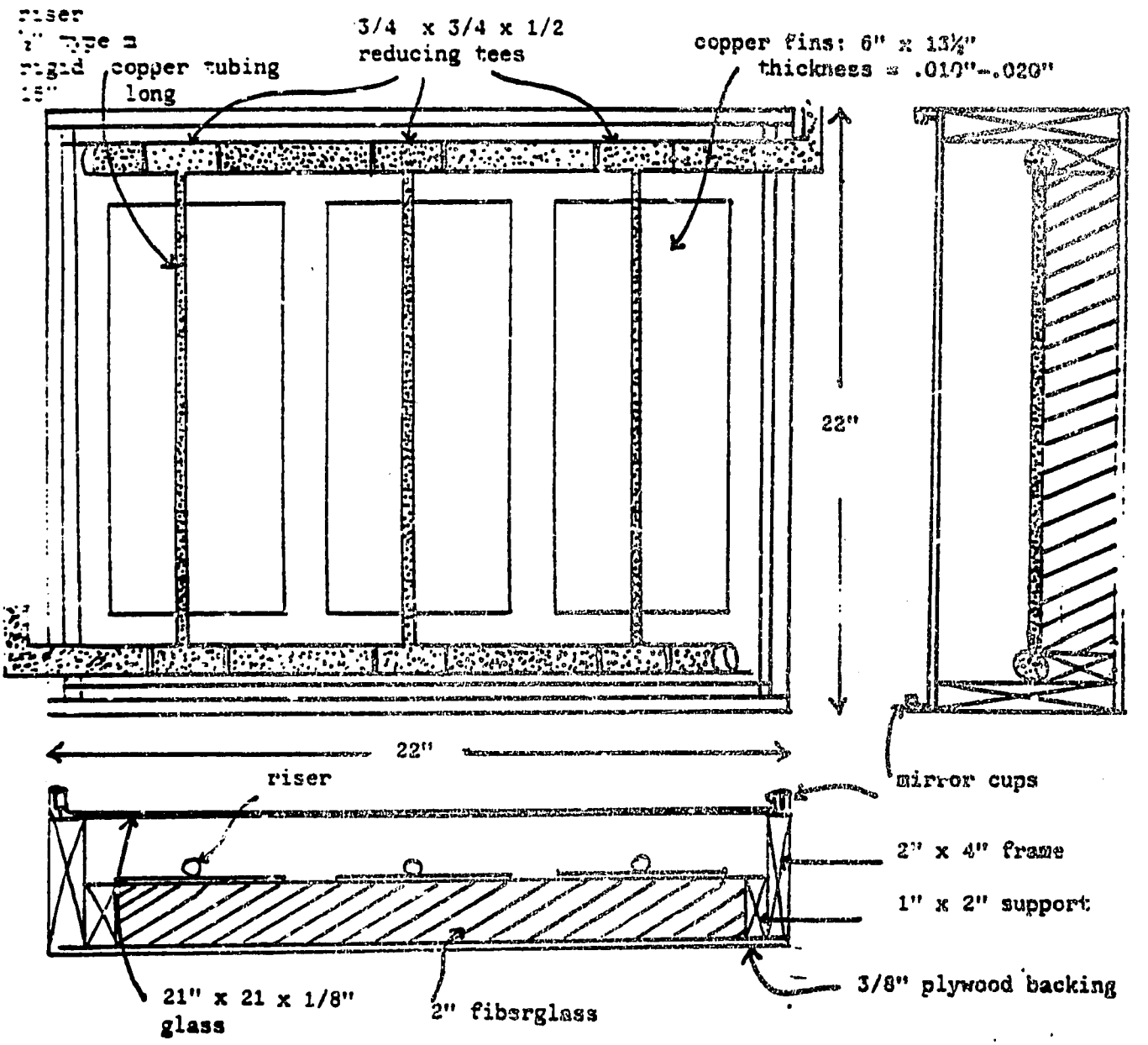

HOW TO SIZE A FLAT PLATE COLLECTOR

To properly design and construct a passive solar water heater, one needs to know the amount of energy required in the form of heated water and the amount of sunlight available on an average day during the time of least sunshine.

By simply dividing the energy required per day by the energy available per day per area, one can determine the area of collector aperture needed.

1. How much energy is required?

   Find: Average hot water usage per person per day
   Number of people using hot water per day
   Desired temperature of hot water
   Incoming cold water temperature
   Density of water (weight per volume)

   For example: 40 liters hot water per person day
   3 people per day
   45 degrees C desired hot water temperature
   15 degrees C incoming water temperature
   Density of water is 1 Kg/liter

$$\frac{40 \text{ liters}}{\text{person day}} \times 3 \text{ people} \times (45-15^{\circ}C) \times \frac{1 \text{ kg}}{\text{liter}} = 3600 \frac{Kg^{\circ}C}{day}$$

$$3600 \frac{Kg^{\circ}C}{day} \times 1 \frac{Kgcal}{Kg\ ^{\circ}C} = 3600 \frac{Kgcal}{day} \text{ (energy required)}$$

2. How much energy is available?

   Find: Clear day winter insolation for the desired tilt
   Percent possible sunshine
   Collector system efficiency

   For example: 2700 $Kgcal/m^2$ day
   65% possible sunshine
   40% system efficiency

$$2700 \frac{Kgcal}{m^2\ day} \times .65 \times .40 = 700 \frac{Kgcal}{m^2\ day} \text{ (energy available)}$$

3. By dividing the amount of energy required (step 1) by the amount of energy available (step 2) one can get a very good approximation of the collector aperture required to provide the desired temperature and volume of water on an average day during the period of least sunshine.

For example:

$$\frac{3600 \ \frac{\text{Kgcal}}{\text{day}}}{700 \ \frac{\text{Kgcal}}{\text{m}^2 \ \text{day}}} = 3600 \ \frac{\text{Kgcal}}{\text{day}} \times \frac{\text{m}^2 \ \text{day}}{700 \ \text{Kgcal}} = 5.1 \ \text{m}^2$$

5.1 m^2 of collector aperture is needed to provide 120 liters of water at 45°C if the incoming water is at 15°C and the insolation is 2700 Kgcal/m^2 day.

(Notice how a complex fraction - a fraction over a fraction - can be simplified by "inverting and multiplying". Also note how the units will always cross out to leave just the units needed: in this case, square meters, or m^2.)

4. Once this ratio of aperture-to-volume is found, it can be used to size a collector for any size hot water tank, assuming all of the variables remain the same.

If the system will not be asked to provide hot water during the period of least sunshine (if, for example, there is virtually no sun for six months of the year), then the clear day <u>summer</u> insolation for the desired tilt and the <u>summer</u> percent possible sunshine must be substituted for the winter data used in step 2. Summertime system efficiency is also much greater than wintertime efficiency because there is less heat loss in the summer.

Care must be taken not to ask too much of a solar collector system: If a system is sized to provide hot water in the winter, it will probably produce very hot water in the summer, which is potentially dangerous (scalding occurs at water temperatures of 60°C).

How to pressure test a plumbing system:

1. To pressure test with water only:

Cap or plug all openings in the system, except two. Of those two, loosely cap or plug one of them and attach a garden hose or some other water source to the other. Make sure that the loosely capped or plugged opening is near the top of the system.
Begin filling the system. When water begins to leak from the loosely capped or plugged opening, tighten the cap or plug so that no water can escape. Inspect all joints in the system for leaks by looking for obvious ones and feeling each joint for any sign of moisture. Mark any leaky joints. Drain the system, fix the leaks and re-test.

2. To pressure test with water and compressed air:

Cap or plug all but one opening near the top of the system. Fill the system with water using this upper opening. Attach a compressed air source to the system and compress to 50 pounds per square inch (3.5 Kg/cm^2) pressure or to the pressure at which the system will be operating, whichever is greater. Tap each joint with a wooden or rubber mallet to simulate expansion and contraction stresses. Look for water leaks at each joint. Mark all leaks, drain the system, repair the leaks and re-test.
(If a pressure gauge is available, attach it to the system and test for 24 hours.)

3. To pressure test with air only:

Cap or plug all but one opening of the system. Attach the pressure gauge tester to the remaining opening and compress with air to 50 psi or 3.5 Kg/cm^2 or the pressure at which the system will be operating, whichever is greater. Tap all joints with a wooden mallet to simulate expansion/contraction stresses. Listen for leaks. Leave the guage on the system for at least 24 hours. If the guage shows ANY decrease in pressure, there is a leak in the system. Leaks can be found by applying a soap/water solution to each joint and watching for bubble formations. Mark any leaks. Release the pressure from the system, fix the leaks and re-test.

DIRECT GAIN SIZING PROBLEMS

Given the following information, decide whether or not a Breadbox-type solar water heater would be effective. If so, using the sizing formula of 80 liters of water per square meter of glazing aperture, find the area of glazing needed to supply the amount of hot water desired.

Daily Hot Water Volume Requirement: (liters)	80	200	240	300	400
Desired Temperature: (^{o}C)	50	65	40	45	70
Initial Temperature: (^{o}C)	15	20	20	15	20
Insolation Available: ($\frac{Kgcal}{m^2\ day}$)	2300	3000	2700	2500	2250

Will a Breadbox-type Solar Water heater be effective? (yes/no)

Number and size of tanks:

Aperture area: (m^2)

FLAT PLATE SIZING PROBLEMS

Given the following data, determine the size of storage tank and the area of flat plate collector required:

NOTE: There is 50% efficiency on the collector

Hot water volume requirement:	100 l/day	30 gal/day	40 l/day	120 gal/day
Desired hot water temp:	40°C	110°F	55°C	140°F
Inlet water temperature:	15°C	55°F	20°C	50°F
Insolation:	2700 $\frac{Kcal}{m^2\ day}$	1200 $\frac{BTU}{Ft^2\ day}$	2300 $\frac{Kcal}{m^2\ day}$	1700 $\frac{BTU}{Ft^2\ day}$
Percent Possible Sunshine:	75%	70%	65%	60%

Size of tank:

Area of flat plate collector:

PLUMBING SCHEMATICS WORKSHEET

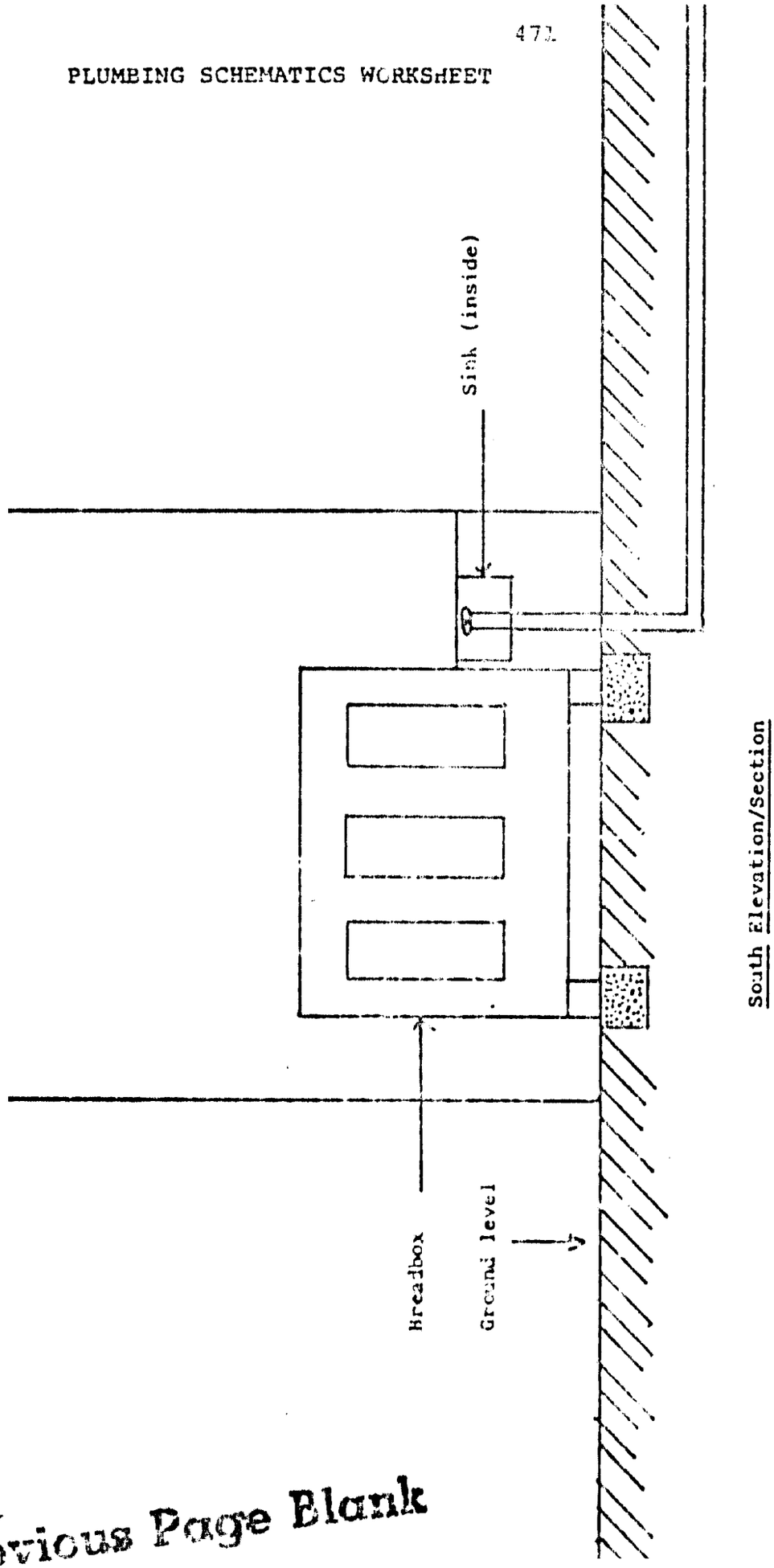

South Elevation/Section

Not to scale

Previous Page Blank

Attachment IV-10-U

PLUMBING SCHEMATICS WORKSHEET

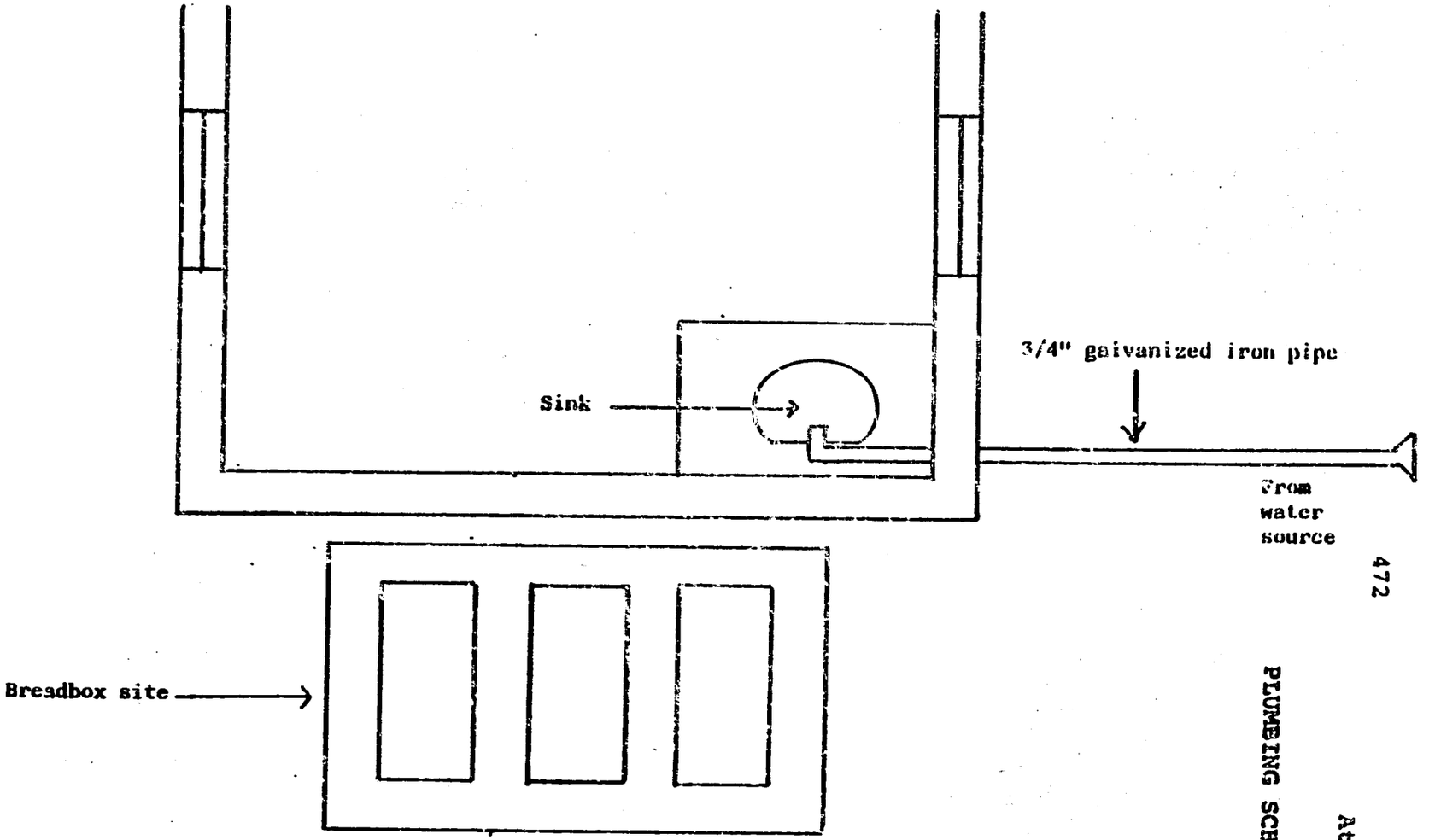

Not to scale

Plan

Assessment: Look for completeness of design, minimizing materials and cost; Minimum but sufficient number of valves, unions, etc. Pipe sizes noted. Drain down capabilities. Pressure/Temperature relief valve if necessary.

FINDING AZIMUTH

Magnetic declination is 17° (magnetic North is 17° E of true North and true South is 17° E of magnetic South. The magnetic declination of your country will vary). By lining up your eye, the compass and the obstacle, you can read the azimuth.

Find Azimuth of the tree by reading the angle from true North on the compass (160°).

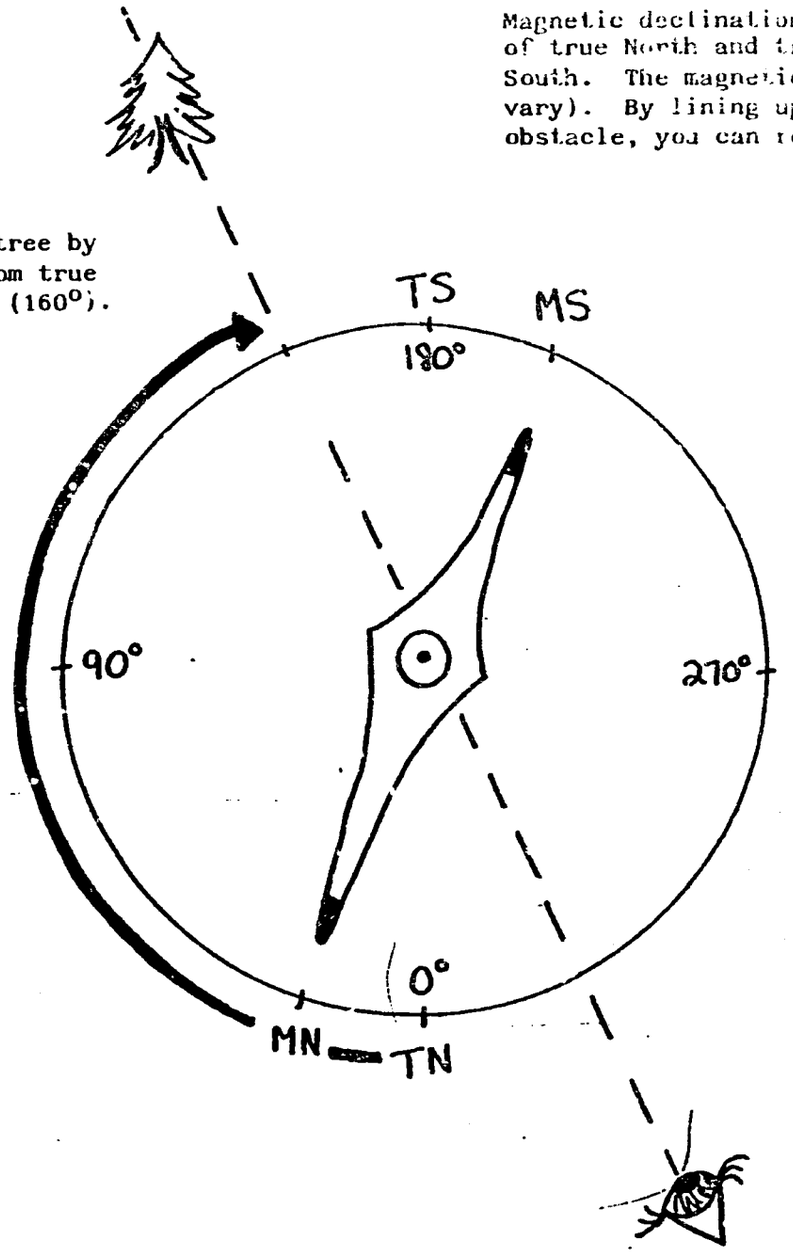

MN – Magnetic North
MS – Magnetic South
TN – True North
TS – True South

FINDING ALTITUDE

Site along straight edge of protractor to top of obstacle.

Angle a is the altitude (in degrees) of the obstacle. Angle a can be found by subtracting the angle marked by the plumb bob from 90°.

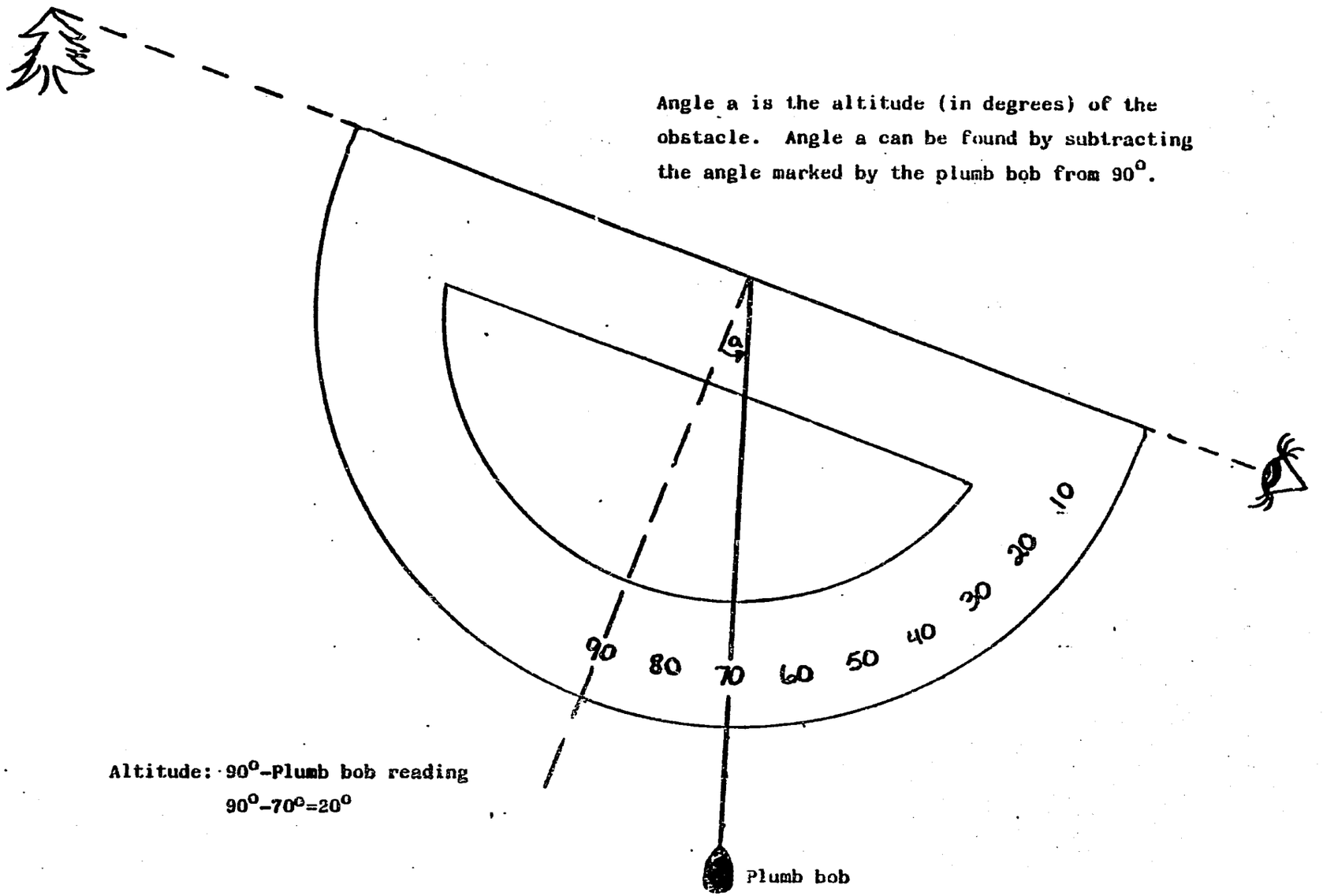

Altitude: 90°-Plumb bob reading

$90^{\circ}-70^{\circ}=20^{\circ}$

PLOTTING AZIMUTH AND ALTITUDE

Azimuth: 160°

Altitude of Obstacle: 20°

Altitude of winter sun at Azimuth 160° is 25°. Therefore the obstacle will not shade the potential solar site.

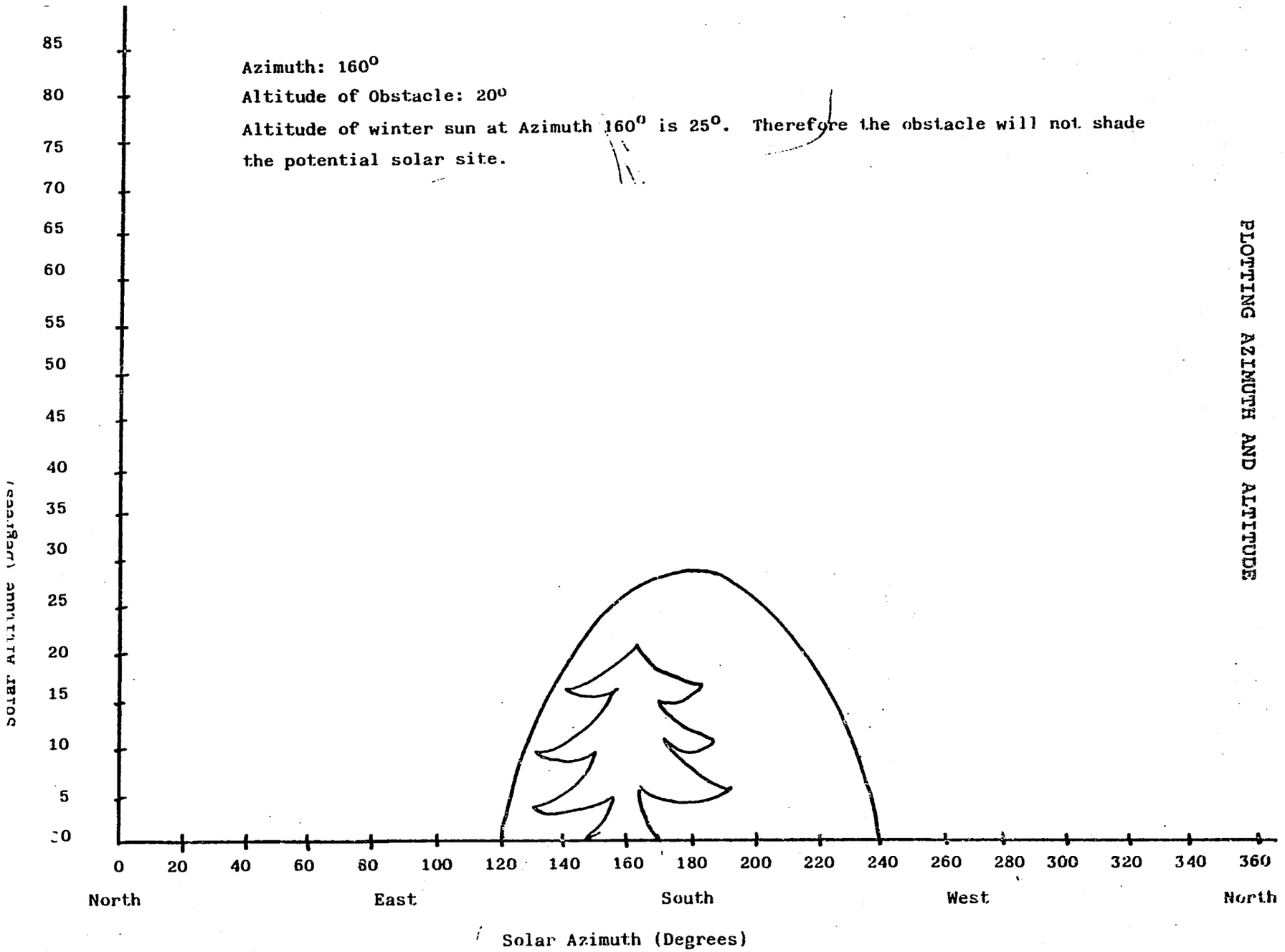

DIAGRAM OF FOUNDATION

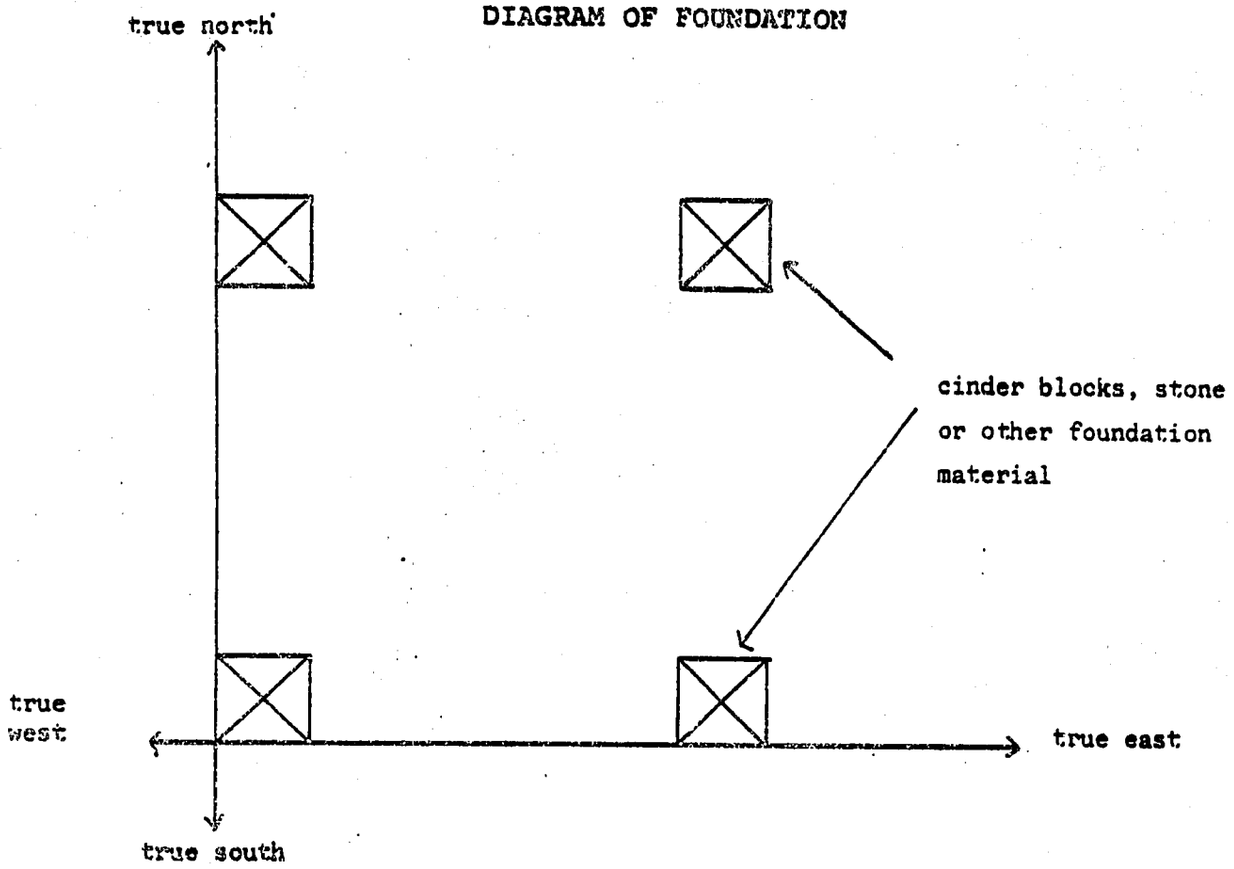

Plan

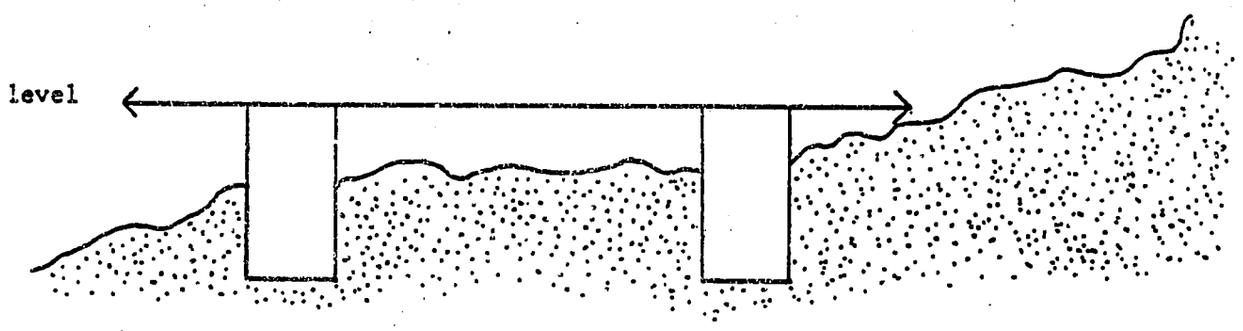

cinder blocks, stone or

other foundation material

Section

GUIDELINES FOR COMMUNITY WATER NEEDS / USES ASSESSMENT

In teams of 2-4 people, you are to choose an aspect of community life (education, health care, residential, support systems, etc.), and through community assessment techniques (questionnaire, interview, observation, conversation, combinations of a number of methods), gather data about the water requirements and uses in that particular area. The data should include;

- end use of the water
- amounts and temperatures required at the end use
- disposal systems for gray and black water (including who is responsible, the specific methods of disposal)
- description of the water system
- water sources and methods of storage
- purification systems
- health problems associated with the water system

In gathering the information, please follow these guidelines:

- All team members should participate actively in all phases of the exercise.

- Information gathering should be conducted in a sensitive and careful manner (always ask permission before entering a place, or reading a meter; please make sure that you don't prowl around or intrude).

- Concentrate on using appropriate communication skills: respect your informants' privacy and values, listen and report accurately, be patient, report facts, not what you wish you had found.

- Limit the scope of the report, or else you may be overwhelmed: narrow and focused.

Your written report should include:

- a summary of data
- a copy of questions asked
- methodology used
- resources consulted during the project
- suggestions for improving the assessment
- recommendations to improve existing water systems and health status in ways that are environmentally sound, energy efficient, and within cultural and economic constraints of the community.

The Team reports will be handed in and discussed during Session 22.

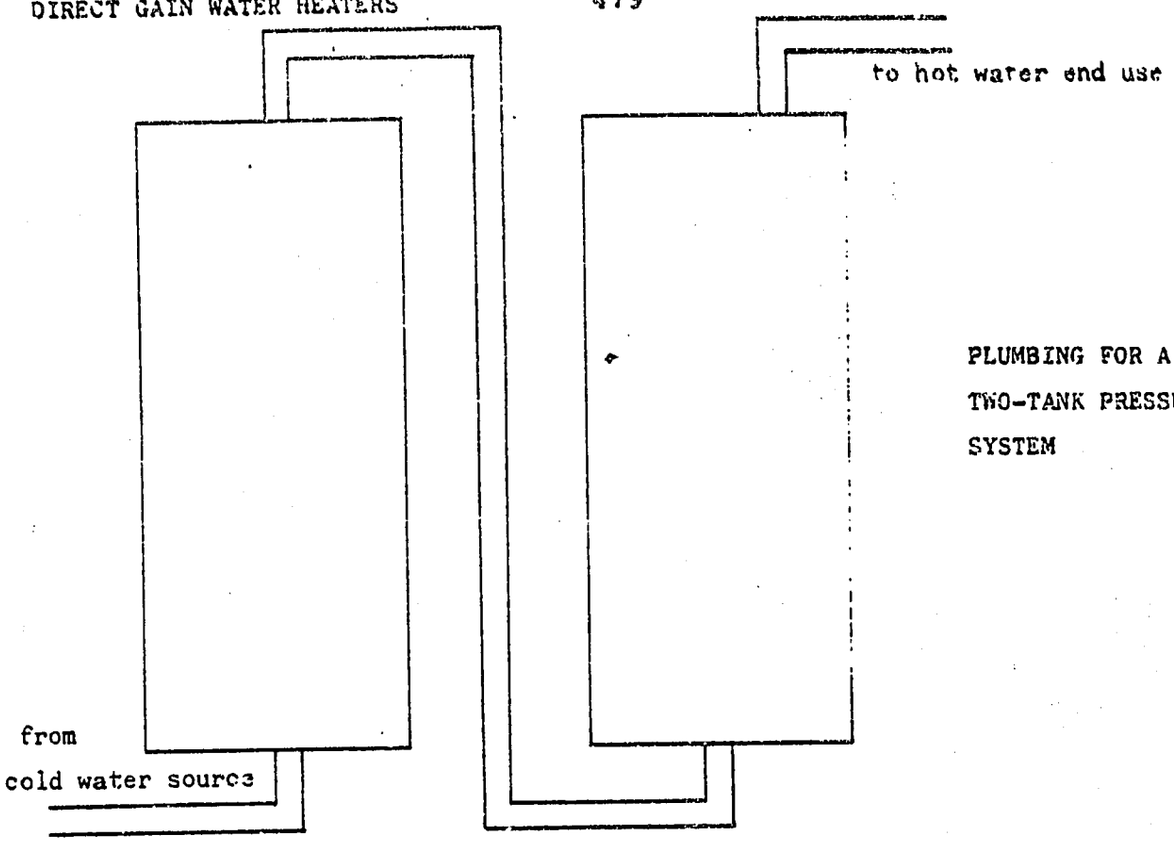

PLUMBING FOR A TWO-TANK PRESSURE SYSTEM

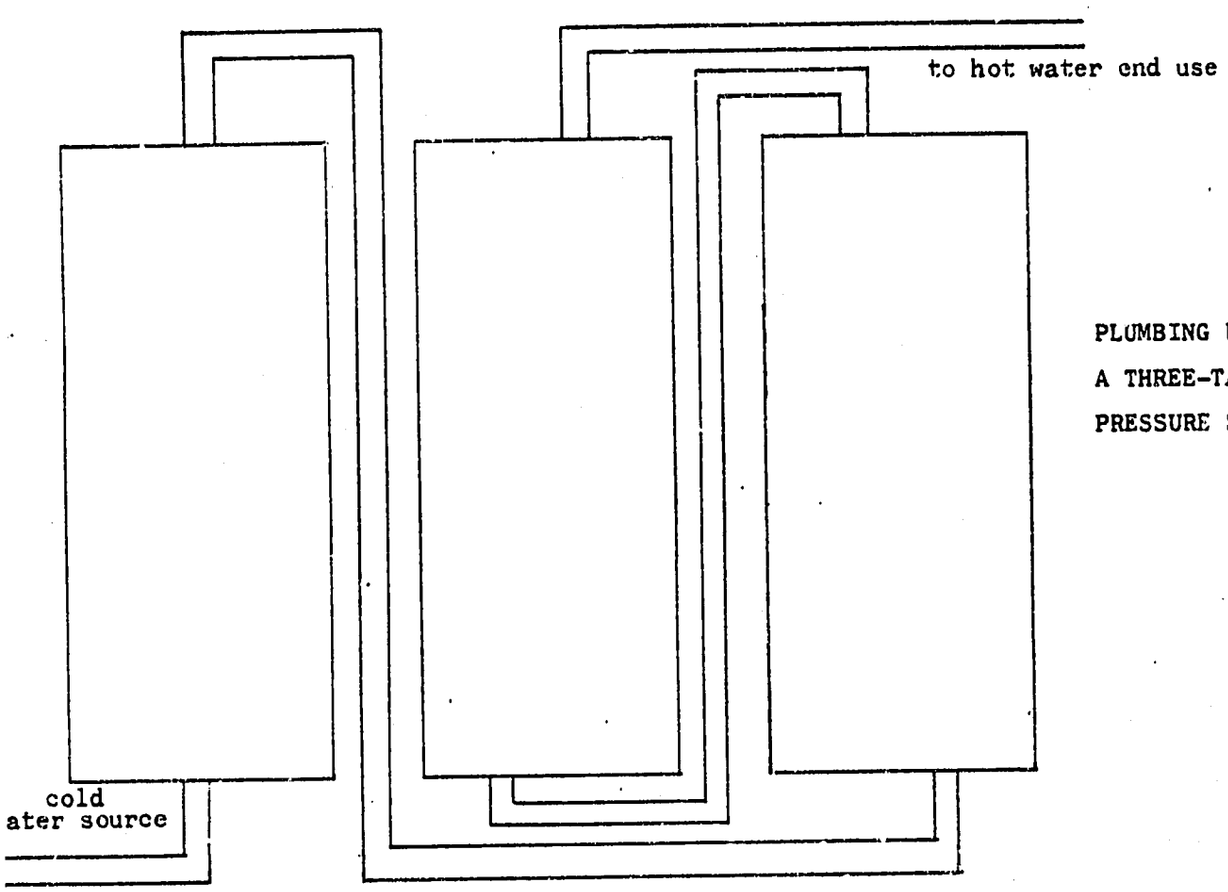

PLUMBING FOR A THREE-TANK PRESSURE SYSTEM

Previous Page Blank

DIRECT GAIN WATER HEATERS

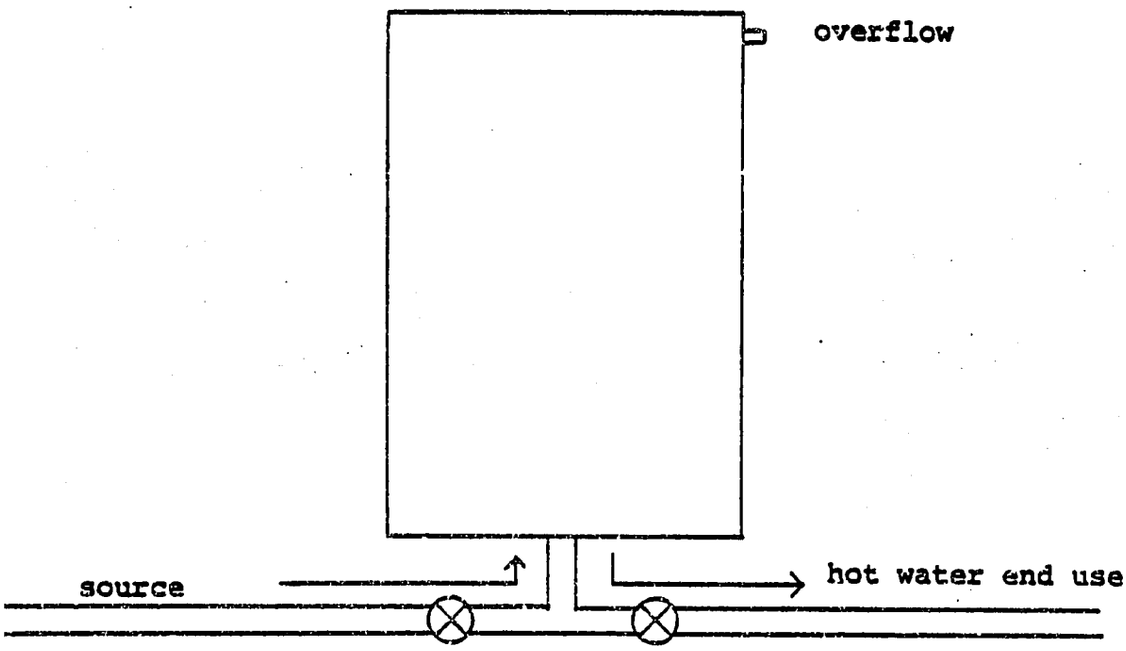

PLUMBING FOR A NON-PRESSURE BATCH OR DRAIN BACK SYSTEM

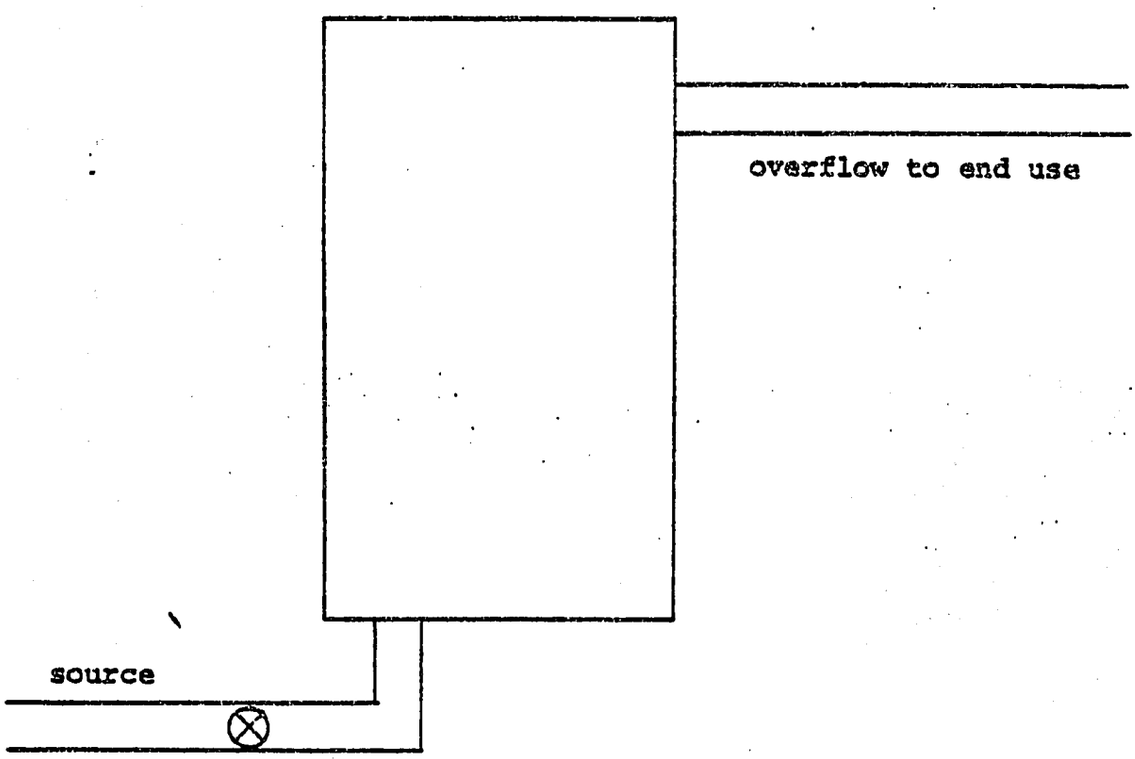

PLUMBING FOR A NON-PRESSURE OVERFLOW SYSTEM

I. A Comment on the Role of Women in Agriculture

Margaret Mead

Two major world conferences held in 1974—the U.N. Population Conference and the U.N. World Food Conference—and then the 1975 International Women's Year Conference itself, finally brought into the limelight the very serious condition of women in the world, particularly in rural societies. The U.N. Population Conference called attention to the role played by women in population control and to the devastating results of removing women from agricultural production after the introduction of machinery. The World Food Conference highlighted the extent to which concern about the difficult problems of agricultural production has tended to obscure the need for far more attention to the problems of the preservation, distribution, and nutritional value of food. It is to aspects of the problem of women in agriculture that are related to these points that I wish to draw attention in this brief commentary.

The Impact of Mechanization

Until the agricultural revolution introduced the animal-drawn plough, women played a crucial role in agriculture, sharing with men the subsistence activities of food production, conservation, and distribution. This was true in all types of societies. With the introduction of the plough, the increasing productivity of agriculture, and the development of foods that could be stored for long periods, some men and women were relieved from day-to-day preoccupation with the problems of subsistence. These innovations freed the men from food-gathering activities, but they did not—as might have been expected—free the women from maintenance activities involved with food: for the most part women continued to be bound to the household by the need to produce many children, because so many of their children died. Whatever their social class, women could not easily escape this restrictive role unless they chose to give up child bearing, as in the case of nuns, priestesses, and some women professionals—roles which normally were not as highly valued by society as motherhood.

Today, in those parts of the world where pre-agricultural-revolution conditions prevail, women are still the principal producers of food. They are,

Margaret Mead is Curator Emeritus of Ethnology of the American Museum of Natural History, and retiring President and now Chairman of the Board of Directors of the American Association for the Advancement of Science

however, being displaced by machines (which, it is believed, only men can operate), just as women were displaced 10,000 years ago when animals (also considered the sole province of men) were introduced into agriculture. Hence women are being converted from producers of food to consumers only. One of the consequences of barring women from participating in the production of food is a decrease in agricultural production, especially in those areas where the men work for wages away from the village. Wartime experience in Europe demonstrated that women were fully capable of using modern agricultural machinery, but this evidence appears to have had no effect on society's beliefs about women. It seems clear that such beliefs are having a negative effect on both the women and society. Therefore, for women's and society's sake, a major effort should be made to bypass the archaic notion that machinery (as a replacement for large domestic animals) is the sole prerogative of men.

Modern Marketing Techniques and the Division of Labor

Freeing many men, but few women, from the demands of subsistence tended to stratify societies. Over the years, decisions about the allocation of food and marketing, and about the allotment of fertilizers and pesticides for growing subsistence or cash crops were transferred first from the village to the provincial city, then to the capital city, and finally to the international marketplace. These decisions thereby increasingly became removed from the daily input of women. Aspects of the process of food production such as the local consumption, allocation, or preservation of foodstuffs, which traditionally were the province of women, progressively have become components of global agricultural transactions. Food today is treated as a commodity in large-scale production or as a weapon in economic negotiations. Its use at the local level as the main means of freeing human beings from hunger is being neglected. Half a harvest may be lost in a country where food is considered solely as a cash crop and where the traditional role of women in allocating part of the crop for local consumption is ignored.

The "Professionalization" of Agriculture

The Euro-American tendency to attribute the concern with agricultural production (with food *before* it leaves the harvest field) to men and to attribute the concern with food *after* it leaves the harvest field to women led to the dual assumption that scientific agriculture was a male field and scientific food knowledge (food preservation, nutrition, child rearing, and home management) was a female field. This seemed to be a step in the right direction when it first was developed in the United States and initially was spread around the world through technical agricultural schools for males and home economics schools for females. Actually its effects have been disastrous. The historic tendency of males to regard their activities (usually extradomestic) as more important than those of females was thus accentuated when the roles of men and women on the farm were professionalized. Nutrition, since it was considered a female field, became devalued; in some cases, as in the United States, the whole field of home economics was devalued. Women concerned with improving their status refused to become home economists. Hence,

before U.S. training methods for occupations concerned with food production, distribution, preservation, processing, and consumption are disseminated further around the world, the dangers of this type of segregated occupational training should be recognized and corrected.

The Need for a New Approach

What is needed are departments or schools in which *all the skills related to food*—including plant genetics, animal husbandry, veterinary skills, nutrition, child development, food management, etc.—are taught without discrimination to both men and women. Only in this way can there be any hope of including women at every level of the decision-making process and of restoring the concept that the primary function of food is to feed people, and to feed them well, not to serve as a form of national aggrandizement.

The inclusion of women in agriculture in those countries where there never has been large-scale agriculture also is important. The 1974 World Food Conference emphasized that it is essential that all countries—especially tropical countries whose soil is rapidly being destroyed by modern agricultural methods—make more use of their traditional local food sources, the knowledge of which is very often the province of women. Renewed awareness of the nutritional value of fruit trees is particularly important. The separation of women from agriculture and the displacement of traditional methods of production and traditional food sources by imported machinery and imported cereals (which should be reserved for emergency relief and disasters) should be watched most carefully. Far from being discouraged from participating in decisions regarding crop planning, women should be trained further in the nutritional value of traditional crops, and their advice should be sought when village agricultural plans are discussed.

Moreover, women should be particularly concerned with what role they can have in shaping decisions that affect all human beings—men, women, and children—not only with their own status. They should emphasize that it is a great loss for *everyone* when women, whether professionally or experientially trained, are barred from participating meaningfully in the decision-making process, be it at the traditional historic locus of the household and village or at international deliberations about global problems.

WORKSHEET: Barriers & Opportunities

Instructions:

Please list at least six opportunities, and six barriers facing men in the development process. Your group should be comprised entirely of women; however, if there are men in the group, they should view the opportunities and barriers from the perspective of a woman, as much as possible. Take a few minutes to fill out the worksheet by yourself, then share your ideas with the others in your group. When your group has finished collaboration and discussion, you will meet with the other groups (approximately 20 minutes.

Women's Group / Opportunities and Barriers

Opportunities		Barriers
	MEN'S ROLE IN DEVELOPMENT	

Previous Page Blank

MONITORING AND ASSESSING SOLAR-HEATED TEMPERATURE AND VOLUME

Each group should establish procedures to measure the amount and temperature of water used each time during the food preparation activities. You will need a thermometer and a pre-measured container for the water, and a pen and paper to record the data each time the water is used.

Be sure to include the time of day the water was taken, the amount, the temperature, and any relevant comments.

When you have finished with all the uses required (i.e., you have washed dishes, cleaned the area and have recorded all the data), allow the water to run in two-liter increments (please save the water; there will be barrels available), noting the temperature of each two-liter amount.

Plot a graph that illustrates water quantity vs. temperature.

From the graph and the data collected, determine how much water was available above the temperature stated in the heater design specifications.

Please answer the following questions:

Was the water heater properly sized for the volume and temperature required during the activities?

Does the system provide the volume and temperature to meet the design specifications?

If your yearly income was less than $5,000/year, would you invest in this water heater? ($100/year?)

TASK ANALYSIS

PROJECT : Build a Solar Breadbox Water Heater

TASKS	TASK ELEMENTS	PERFORMANCE CRITERIA	KNOWLEDGE AND COGNITIVE SKILLS	MATERIALS	TOOLS
1. Estimate daily hot water volume & temperature requirements		Information is gathered in either English or metric units	Time of usage Knowledge of per person or per family demand & number of users, as well as temperature preference & incoming water temperatures	Paper	Pencil
2. Collect or obtain local climate data		Data covers all seasons	Knowledge of informal sources of climate data	Paper	Pencil
3. Select site	Obtain sun angles chart for necessary latitude		Knowledge of design alternatives for variations in latitude; know how to read sun angle chart	Sun angle chart	
	Perform shade map calculations at several potential sites	Azimuth and altitude readings are accurate	Know magnetic declination of site Knowledge of shade mapping	Paper	Pencil, protractor & compass
	Compare data from several sites & select best site	Selection is based on site with least shade	Knowledge of amount of daily sun required for application		
	Determine water availability & purity				

TASK ANALYSIS

PROJECT : Build a Solar Breadbox Water Heater

TASKS	TASK ELEMENTS	PERFORMANCE CRITERIA	KNOWLEDGE AND COGNITIVE SKILLS	MATERIALS	TOOLS
4. Determine insolation	See Project : Make & Use an Insolation Meter	Accurate readings & calculations	Finding temperature differences, calculating insolation	Insolation meter, water-tight can, insulation, fasteners, paint, glazing, water	Thermometer
	Make conversion between metric & English systems or metric to English as necessary	Correct arithmetic	Knowledge of relationship between English and metric units		
5. Size system	Determine the size of breadbox necessary to provide desired quantity & temperature of water	Correct arithmetic	Knowledge of storage-to-glazing ratio & insolation rate		
6. Prepare site	Prepare foundation for system	Accurate grasp of load-bearing capacity of support system	Knowledge of load-bearing capacities for various types of support systems	Rocks or concrete or blocks	Shovel, hoe, rake
	OR				
	Strengthen existing structure to bear weight of system	Same	Same	Wood, fasteners	Hammer, saw
	OR				
	Build a platform for the system	Same	Same	Wood, fasteners, wood preservatives	Hammer, saw

TASK ANA

PROJECT : Build a Solar Breadbox Water Heater

TASKS	TASK ELEMENTS	PERFORMANCE CRITERIA	KNOWLEDGE AND COGNITIVE SKILLS	MATERIALS	TOOLS
7. Prepare water tank using drum (tank selection determined by water source delivery pressure)	Plug holes , if any		How to use pipe wrench		Pipe wrench
	Pressure test using water or air	No leaks	Knowledge of internal pressure restrictions for various tanks	Water, hose, plug, caps or compressed air, pipe compound	
	Reduce size of large bung-hole(s) is necessary				Pipe wrench
	Locate & weld second nipple to drum if necessary	Watertight weld	Understanding of basic welding principles & correct placement of second nipple	Nipple	Brazing or welding torch outfit
	Rustproof inside of drum (optional depending on availability & cost of rust-proofing materials & replacement drums)		Use of rustproofing material , make sure the material is non-toxic!	Fiberglass resin or rust-resistant paint	Paintbrush
	Paint drum with dark, flat paint	Completely covered		Paint	Paintbrush

TASK ANALYSIS

PROJECT : Build a Solar Breadbox Water Heater

TASKS	TASK ELEMENTS	PERFORMANCE CRITERIA	KNOWLEDGE AND COGNITIVE SKILLS	MATERIALS	TOOLS
8. Build insulated box	Measure & cut framing material	Framing material measured & cut properly	Basic carpentry skills	Lumber	Saw, tape measure, construction square
	Fasten framing material to construct frame			Nails, screws, fasteners in general	Hammer, screwdriver
	Weather-proof exterior of frame	Weather-tight		Tarpaper, glue, staples, plastic sheet or similar	Utility knife, staple gun
	Fasten interior skin if necessary to hold insulation material in place	Insulation material evenly distributed in walls of box		Interior skin fasteners (nails, staples, tarpaper)	Same as above
	Affix exterior siding	Box holds together & is rigid		Exterior siding fasteners	Hammer, staple gun
9. Paint interior of box		Completely covered		Paint	Paintbrush

TASK ANA

PROJECT : Build a Solar Breadbox Water Heater

TASKS	TASK ELEMENTS	PERFORMANCE CRITERIA	KNOWLEDGE AND COGNITIVE SKILLS	MATERIALS	TOOLS
10. Drill holes in box to align with holes in water tank		Holes in box aligned with tank when placed in box			Drill & bit
11. Place tank in box & stabilize		Tank is secured		Stabilizing blocks, nails	Hammer
12. Install system at site					
13. Plan plumbing of tank			Knowledge of available plumbing parts & materials		
14. Install plumbing		Watertight connections from inlet to tank & from tank to output		Fittings, pipe, pipe compound, PVC solvent	Pipe wrench, pipe threader, hack saw, cutter, vice
15. Size glazing material			Knowledge of different glazing materials		Tape measure, cutter

TASK ANALYSIS

PROJECT : Build a Solar Breadbox Water Heater

TASKS	TASK ELEMENTS	PERFORMANCE CRITERIA	KNOWLEDGE AND COGNITIVE SKILLS	MATERIALS	TOOLS
17. Construct insulated lid	See Task #8			See Task #8	
18. Install lid				Hinges, opening device, latches, weather-stripping	Screwdriver, drill, wrenches
		Overall Criterion System delivers hot water in accordance with the requirement			

TASK ANA

PROJECT : Build a Flat Plate Collector Solar Water Heater

TASKS	TASK ELEMENTS	PERFORMANCE CRITERIA	KNOWLEDGE AND COGNITIVE SKILLS	MATERIALS	TOOLS
1. Estimate daily hot water demand & temperature requirements	Find out number of people & gallons per person per day; desired hot water temperatures, incoming cold water temperatures		Type of usage Knowledge of water usage per person or per family demand & number of users; culture's temperature preference	Paper	Pencil
2. Collect or obtain local climate data		Data covers all seasons	Knowledge of informal sources of climate data	Paper	Pencil
3. Select site	Obtain sun angles for required latitude		Knowledge of design alternatives for variations in latitude		Sun angle chart, universal protractor, compass
	Perform shading calculations at several potential sites	Calculations are arithmetically accurate	Knowledge of sun angles & latitude	Paper	Pencil
	Compare data from several sites & overall selection	Selection is made on basis of most favorable results			
	Determine water availability & purity				

TASK ANALYSIS

PROJECT : Build a Flat Plate Collector Solar Water Heater

TASKS	TASK ELEMENTS	PERFORMANCE CRITERIA	KNOWLEDGE AND COGNITIVE SKILLS	MATERIALS	TOOLS
4. Determine insolation	See Project : Make & Use an Insolation Meter	Accurate readings & calculations	Finding temperature gain & loss, calculating insolation	Paper, insolation meter	Thermometer, scale
	Make conversions between metric & English systems as necessary	Correct arithmetic	Knowledge of relationship between BTU/ft^2 & mW/cm^2, & cal/cm^2	Paper	Pencil, conversion chart
5. Size system	Determine number of sq. ft. (m^2) required to provide necessary amounts of water at design temperature	Correct arithmetic	Knowledge of requirements & insolation & sizing calculations	Paper	Pencil
6. Prepare site	Prepare support for system OR Strengthen existing structure to bear weight of storage tank OR Build a platform/support for the system	Accurate calculations or tests of load-bearing capacity of support system	Weight of storage tank; knowledge of load-bearing capacities for various types of support systems Bearing loads of support structure (wood, concrete, etc.)	Foundation material: rocks or concrete Framing materials, fasteners, wood preservative	Shovel, appropriate tools for fasteners, saw, level, paintbrush Hammer, saw

TASK ANA

PROJECT : Build a Flat Plate Collector Solar Water Heater

TASKS	TASK ELEMENTS	PERFORMANCE CRITERIA	KNOWLEDGE AND COGNITIVE SKILLS	MATERIALS	TOOLS
7. Prepare storage tank using water tank (Water source pressure is important in determing which tank is feasible) OR	Pressure test with water or air	No leaks	Know how to use pipe wrench	Tank, compressed air OR pressurized water, pipe compound	Pipe wrench, breaker bar, tools to remove insulation(screwdrivers, chisel, etc.), air pressure guage
8. Prepare storage tank using drum	Plug holes & clean tank		Know how to use pipe wrench	Drum	Same as above
	Pressure test using water or air	No leaks	Knowledge of drum's pressure limits	Compressed air in; pressurized water; pipe compound	
	Reduce size of large bung-hole(s) if necessary			Reducers or bushings	
	Locate & weld 2nd nipple to drum if necessary	Watertight weld	Know where to place 2nd nipple; understanding of basic welding techniques	Nipple, welding rod	Welding outfit; cutting torch or chisel, hammer

TASK ANALYSIS

PROJECT : Build a Flat Plate Collector Solar Water Heater

TASKS	TASK ELEMENTS	PERFORMANCE CRITERIA	KNOWLEDGE AND COGNITIVE SKILLS	MATERIALS	TOOLS
8. Prepare storage tank using drum, continued	Rustproof (optional, depending on availability & cost of rustproofing materials & replacement drums)	Complete coating of rustproof on inside of drum	Use of rustproof	Rustproofer, i.e. fiberglass resin, or rust-resistant paint	
9. Place tank & stabilize on insulated platform		Stable		Blocking & fasteners	Tools to fasten blocks to platform
10. Design flat plate collector frame, plate(s), manifold, insulation, etc.			Transmissivity, availability, & longevity of various glazing materials		
11. Build flat plate collector	Measure & cut frame		How to build frame; basic carpentry skills	Frame material	Tape measure, saw
	Build & assemble 2" x 6" frame	Tight corners		Fasteners	
	Affix backing to frame	Tight fit (seal)		Fasteners, caulk	Tools for fasteners

PROJECT: Build a Flat Plate Collector Solar Water Heater

TASKS	TASK ELEMENTS	PERFORMANCE CRITERIA	KNOWLEDGE AND COGNITIVE SKILLS	MATERIALS	TOOLS
11. Build a flat plate collector, continued	Insulate bottom half, making sure to provide system to keep insulation from sliding		Support necessary for insulation used & understanding of different insulation materials	Insulation	As needed to insulate (i.e. stapler)
	Construct internal frame to support metal sheet	Adequate size & strength to support collector		Internal frame material fasteners	For fasteners
	Cut metal sheet into strips	Same lengths & widths		Metal sheet	Tape measure, shears, straight edge
	Cut tubes & affix metal tube to each strip	Tubes not crushed; all same length		Tubes, welding rod OR solder & propane flux; steel wool rags, muriatic acid	Welding outfit OR soldering outfit; flux brushes, tube cutter, clamp, pipe threader & oil
	Construct manifold to accept tubes & fins/cap ends	Manifold outlets in line		Tees, connectors, caps, reducers	Same as above & pipe wrenches
	Fit tubes to manifold -- solder, weld, or thread	Watertight connections		Pipe compound	

TASK ANALYSIS

PROJECT : Build a Flat Plate Collector Solar Water Heater

TASKS	TASK ELEMENTS	PERFORMANCE CRITERIA	KNOWLEDGE AND COGNITIVE SKILLS	MATERIALS	TOOLS
12. Position collector in frame					
13. Mount & position collector		Stable	Knowledge of tilt & orientation to sun	Fasteners	Appropriate tools
14. Plan plumbing from collector to tank & back		Minimize cost & complexity; proper slopes of each pipe run	Knowledge of available plumbing parts & materials; position of valves, if necessary; knowledge of thermosiphon action	Paper	Pencil
15. Install plumbing between tank & collector		Watertight connections from input to tank & from tank to collector		Plumbing parts	Soldering outfit, pipe wrench outfit
16. Size & cut glazing		Large enough to cover collector		Glazing	Tape measure, shears, straight edge glass cutter, etc.
17. Install glazing material & seal		Watertight seal removeable		Caulk, glazing fasteners	Tools for fasteners

TASK ANA

PROJECT : Build a Flat Plate Collector Solar Water Heater

TASKS	TASK ELEMENTS	PERFORMANCE CRITERIA	KNOWLEDGE AND COGNITIVE SKILLS	MATERIALS	TOOLS
18. Plumb storage tank with incoming cold & outgoing hot water		Watertight Interim Criterion Thermosiphoning flat plate solar water heater provides the volume of water required at the desired temperature.	Soldering, etc.	Necessary pipes, tubes, fittings, valves	Soldering, etc.
19. Pressure test system					
20. Build insulated storage tank box	Measure & cut framing material	Right size	Know how to draw & read design plans	Framing material	Measure, saw
	Fasten framing material to construct frame, including roof			Fasteners	Tools required for fasteners
	Weatherproof exterior of frame	Box is weatherproof	Know weather design criteria	Weatherproofing material (plastic, tarpaper) tacks or staples	Tack hammer staple gun

TASK ANALYSIS

PROJECT : Build a Flat Plate Collector Solar Water Heater

TASKS	TASK ELEMENTS	PERFORMANCE CRITERIA	KNOWLEDGE AND COGNITIVE SKILLS	MATERIALS	TOOLS
20. Build insulated storage tank box, continued	Position insulation material	Insulation material evenly distributed in wall of box	Know if material used will require interior sheathing	Insulation material	
	Affix exterior (& interior) sheathing to form tight seal	Box holds together, is rigid, & can be tightly closed		Nails, staples, tacks, caulk	Staple gun, hammer
		Overall Criterion System delivers hot water in accordance with the requirement			

TYPICAL THERMOSIPHON SOLAR WATER HEATER

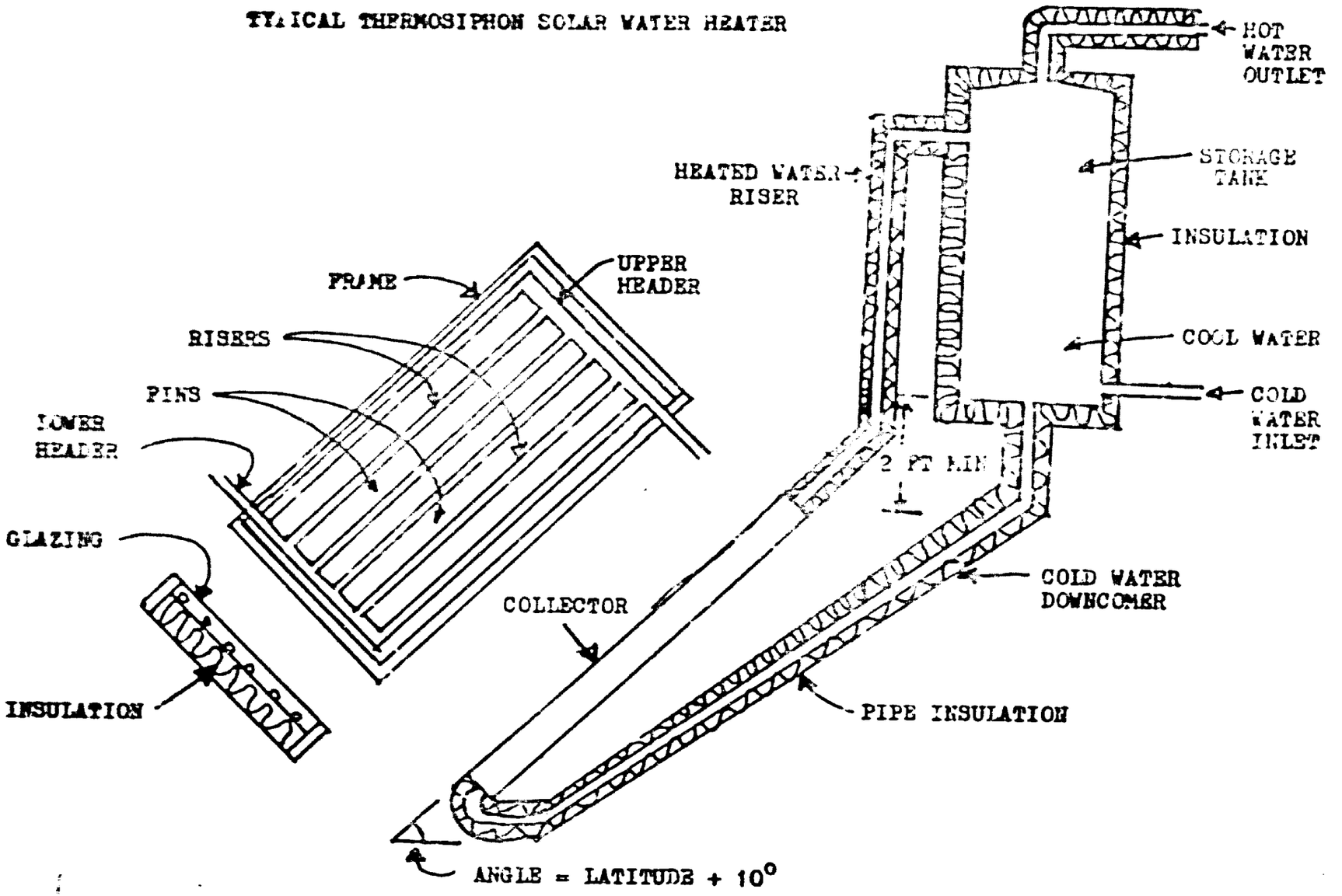

CLOSED CIRCUIT LIQUID COLLECTOR SYSTEM

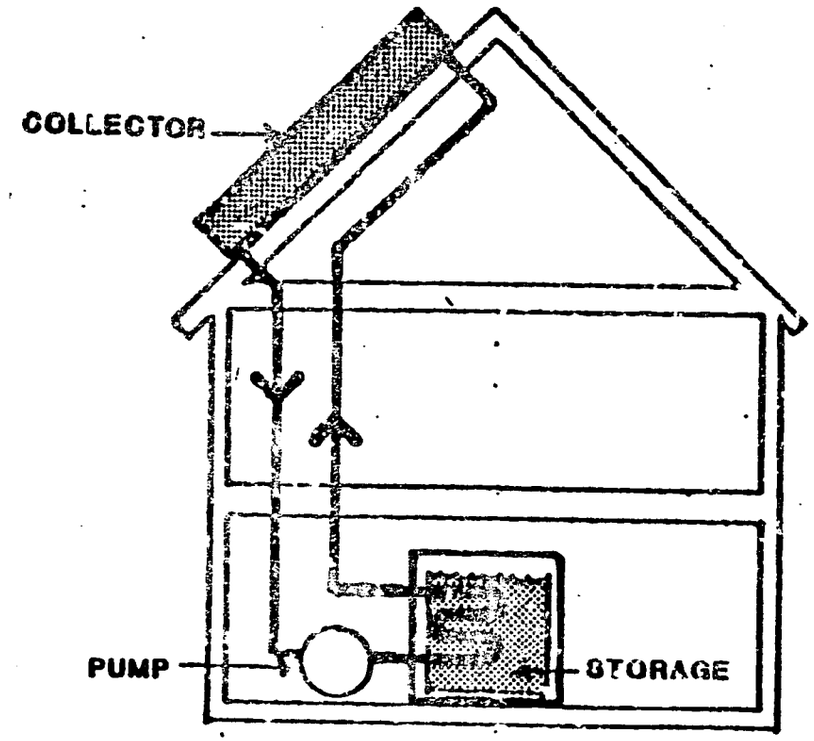

USEFUL SOLAR FORMULAS

$$\text{Insolation (Kgcal/m}^2\text{ day)} = \frac{\text{Weight (Kg)} \times \Delta t\text{/day (}^\circ\text{C/day)}}{\text{Aperture (m}^2\text{)}}$$

$$\text{Breadbox Aperture (m}^2\text{)} = \text{Volume of tanks (liters)} \times \text{m}^2\text{/80-100 liters}$$

$$\text{Flatplate Aperture (m}^2\text{)} = \frac{\text{Personal use (L/person day)} \times \text{\# of people} \times \Delta t(^\circ\text{C})}{\text{Insolation(Kgcal/m}^2\text{ day)} \times \text{\%poss. sun} \times \text{\% effic.}}$$

$$\text{Solar Heat Gain (Kgcal/day)} = \text{Insolation (Kgcal/m}^2\text{ day)} \times \text{Aperture (m}^2\text{)} \times \text{\% transmission}$$

$$\text{Conductive Heat Loss (Kgcal/day)} = \frac{\text{Area (m}^2\text{)} \times \text{time (hrs/day)} \times \Delta t\ (^\circ\text{C})}{\text{R-value (m}^2\text{ hr }^\circ\text{C/Kgcal)}}$$

$$\text{Convective Heat Loss (Kgcal/day)} = \text{Air changes/hr} \times \text{volume (m}^3\text{)} \times \text{heat capacity of air (.29 Kgcal/m}^3{}^\circ\text{C)} \times \text{time (hrs/day)} \times \Delta t\ (^\circ\text{C})$$

$$\text{Heat Storage Volume (L)} = \frac{\text{Solar Gain (Kgcal/day)}}{\text{Density (Kg/L)} \times \text{Heat Cap'y (Kgcal/}^\circ\text{C Kg)} \times \Delta t(^\circ\text{C})}$$

$$\text{Heat Storage Volume (m}^3\text{)} = \frac{\text{Solar Gain (Kgcal/day)}}{\text{Density (Kg/m}^3\text{)} \times \text{Heat Cap'y (Kgcal/}^\circ\text{C Kg)} \times \Delta t(^\circ\text{C}}$$

$$\text{Air Flow (m}^3\text{/min)} = 4 \times \text{vent area (m}^2\text{)} \times \sqrt{\text{Height (m)} \times \Delta t\ (^\circ\text{C})}$$

$$\text{Air Flow (m}^3\text{/min)} = .0004 \times \text{vent area (cm}^2\text{)} \times \sqrt{\text{Height (m)} \times \Delta t(^\circ\text{C})}$$

$$\text{Vent Area (cm}^2\text{)} = \frac{\text{hourly insolation (Kgcal/m}^2\text{ hr)} \times \text{Aperture (m}^2\text{)}}{.01\sqrt{\text{Height (m)} \times \Delta t\ (^\circ\text{C})} \times \Delta t(^\circ\text{C})}$$

PHASE V : SOLAR AGRICULTURAL DRYERS

HEALTH / NUTRITION

WOMEN IN DEVELOPMENT

THE ROLE OF THE VOLUNTEER IN DEVELOPMENT

Previous Page Blank

	DAY 1	DAY 2	DAY 3
A.M.	Session 1: Food Preservation and Storage: An Overview of Cultural, Historical, and Health Perspectives	Session 5: Passive Solar House Design	Session 9: Solar Agricultural Dryer Design: Part II
	Session 2: An Introduction to Solar Agricultural Dryers	Session 6: Principles of Agricultural Drying: Models	
P.M.	Session 3: Planning a Nutritional Garden	Session 7: Development of A Sizing Formula	
	Session 4: Issues in Development & Diffusion of Appropriate Technology: Part I	Session 8: Solar Agricultural Dryer Design: Part I	

	DAY 4	DAY 5	DAY 6
A.M.	Session 10: Women and the Development Process	Session 13: House Design in Four Climates	Session 15: Construction of the Solar Agricultural Dryer: Part III
	Session 11: Site Selection and Preparation	Session 14: Construction of the Solar Agricultural Dryer: Part II	
P.M.	Session 12: Materials Acquisiton & Construction of the Dryer: Part I		Session 16: Developing a Dryer Assessment Plan

Previous Page Blank

	DAY 7	DAY 8	DAY 9
A.M.	Session 17: Natural Cooling	Session 21: Assessing Community Readiness for Women's Involvement in Development Projects	Session 24: Demonstration and Evaluation of Solar Agricultural Dryers
	Session 18: Food Supply: The Relationship Between Agriculture and Nutrition	Session 22: Dryer Assessment and Modification, Part II: Data Analysis and Reporting	
	Session 19: Dryer Assessment and Modifications: Part I		
P.M.	Session 20: Extension Methodologies	Session 23: Issues in Development and Diffusion of Appropriate Technology: Part II	

OVERALL TECHNICAL OBJECTIVE:

Given sufficient and appropriate materials, the Trainee will design, size, construct, and install a culturally viable, solar agricultural dryer that fulfills the following criteria: low-cost, protected from pests and adverse weather conditions, and capable of operating efficiently, so that food dried for storage retains nutrients and freshness.

The Trainee will develop and demonstrate effective extension skills to adequately communicate information to informally educated people concerning the potential uses of solar agricultural dryers to promote health, local self-reliance, and the active participation of all community members.

SESSION 1
Food Preservation and Storage: An Overview of Cultural, Historical and Health Perspectives.

Time: 1 hour 45 minutes

Objective: The Trainee will examine and discuss traditional and new methods of preserving and storing food, and will identify ways in which technological change exerts an influence on local economic, cultural and health status.

Overview: It is emphasized in this session that in order to understand the potential applicability of solar agricultural dryers, it is necessary to gain a perspective on the history and methods of food preservation and storage. The Trainees examine changes in the ways food traditionally have been perserved and stored throughout the world, especially in the U.S. As an introduction to the design, construction, and use of solar agricultural dryers, the Trainees discuss the potential impact and appropriateness of such techniques and devices during Peace Corps service.

Suggested Resources

Brown, Lester, *By Bread Alone*, Praeger Publishers, NY (prepared for the Overseas Development Council).

Liklik Book: A Rural Development Handbook Catalogue for Papua New Guinea, Melanesian Council of Churches; 1977.

Lindblad, Carol, and L. Druben, *Small Farm Grain Storage*, VITA, 1976, Mt. Rainer, MD.

Attachment V-1-A : The Potential of Solar Agricultural Dryers in Developing Areas

Materials Needed: Pens, paper, newsprint, markers (or chalkboard and chalk).

Note: It is helpful if the Trainer is well-versed in both the technical as well as the cultural/historical/health areas of food preservation and storage techniques and devices. If that is not feasible, this session is easily adapted to having two Trainers participate and complement one another's expertise.

Procedure

1. (15 minutes) In pairs, or small groups, the Trainees list as many techniques as possible for both food preservation and storage. These do not have to be explained, or fully understood; the only requirement is that they be recognized as forms of drying or preserving.

2. (10 minutes) The large group meets, and ideas are shared and explained. Either the Trainer or a group member may jot down a compilation of the ideas on a piece of newsprint or on chalkboard.

3. (20 minutes) Each group of Trainees should select, from the list, the methods that have changed in their lifetimes, and discuss the types and consequences of the changes that they have witnessed for each technique or device. (Some examples may be:

Drying fruits: increased availability of products, more (or less) use of chemical preservatives.

Canning: more commerically canned items, less home-canning.

Storing vegetables: more use of chemical preservatives, freeze-drying; dehydrating.

When the changes have been identified for a number of techniques, the Trainee should speculate on the reasons for change. Some examples are:

- increased availability and desirability of high technology methods and materials
- increased availability of non-seasonal food
- larger urban populations / rural migration to the cities
- less time for home preservation and storage
- more rapid transportation and communication systems
- economic growth
- higher crop yields
- increased use of preservatives and additives, as a result of the growing food 'industry'
- more sophisticated refrigeration methods
- perception of food as commodity, rather than food as nutrient.

4. (15 minutes) Each group or pair reports on one or two methods, including changes they have witnessed, and reasons for (or consequences of) those changes. The similarities and differences are examined.

Note: If the trainees come from a variety of backgrounds, or are of different age groups, there will be a broad spectrum of ideas generated.

The list of preservation and storage techniques and devices is consulted, and the Trainer facilitates a short discussion of the techniques and devices listed that are common to the U.S. and developing countries, e.g., solar drying, silos, preservation of foods in syrup or sugar, field drying, salting, smoking.

5. (15 minutes) A short view is presented of the history, development and use of agricultural dryers in various parts of the world (Attachment V-1-A). The following information is recommended for inclusion:

In most of the world, people dry, or otherwise preserve, their staple crops for later use. However, much of that food is lost due to adverse weather conditions, pest damage, and other factors, including improper or inefficient methods of preservation and storage. Usually, some type of solar drying takes place, both in the field and after harvest. In places where corn is the staple crop, it is left on the stalk until nearly dry, and then the process is completed by spreading the corn on mats or on the ground near the house. The corn is stored for use later in the year, and for seeds for the next planting season. Storage techniques often invite pests such as rodents and insects; it is estimated that 50% of grain and corn are lost during post-harvest handling and storage. During traditional drying time, the corn is vulnerable to attack by birds, rodents, and adverse weather. In places where there is foot or road traffic, the crop suffers additional damage from dirt and pollutants. Other staple crops, such as rice and millet, are prone to the same types of losses and damage -- much of which could be prevented through more adequate methods of drying and storage. It should be remembered, however, that appropriate and adequate methods include a sensitivity to cultural norms, and should include traditional ways, not supplant them.

Drying and storing crops involve much more than the technology necessary to preserve and save them for later use: often there is ritual, religious, and important meaning to these processes, and any modification or change in device or methods has an effect on all other aspects of preservation and storage. People often give different nutritional and health values to foods depending on the state of 'freshness': a dry grain may be acceptable where a fresh one is not; a certain type of preservation may be good food for one member of the family, and forbidden to another. It is important to examine the customs surrounding preservation and storage; in addition to the implications for health, the roles of different members of the community must be understood. If drying or storing food is a traditionally male or female role, or one in which the entire family participates, new techniques and devices should incorporate such customs, not ignore them.

6. (30 minutes) In groups of 4-6 (each of the original groups for this session may join with another), the Trainees discuss the following questions:

How might solar dryers and new storage techniques incorporate custom and traditional methods?

What are some health and nutrition implications of both introduced and traditional drying and storage techniques?

What are some advantages and drawbacks to the adoption of new methods and techniques for drying and storage.

A recorder is named in each group, and the ideas and answers are summarized in writing; these will be discussed during *Session 2*.

SESSION 2
An Introduction to Solar Agricultural Dryers

Time: 2 hours 15 minutes

Objective: The Trainee will demonstrate an understanding of the principles and considerations involved in solar drying, including: cultural and health factors, optimal drying conditions, moisture content of food, design parameters, and site requirements.

Overview: The theory, design and implications of solar agricultural dryers are discussed, in preparation for the construction of potentially appropriate food preservation devices.

Suggested Resources

Harris, Kenton, and C.L. Lindblad, *Post Harvest Grain Loss Assessment Methods*, League for International Food Education, Washington, D.C.

Darrow, Ken, and R. Pam, *Appropriate Technology Sourcebook*, Volunteers in Asia, pp. 118-126.

Watt, S.B., *Ferrocement Water Tanks and Their Construction*, Intermediate Technology Publications: London, 1978, pp. 84-91.

A Survey of Solar Agricultural Dryers, Brace Research Institute, Macdonald College of McGill University, Canada (Quebec): 1975.

"Storage Requirements of Vegetables and Fruits", a handout from *Organic Gardening Magazine*, Sept. 1979, Emmaus, PA: Rodale Press, p. 62.

Organic Gardening Staff, eds., *Stocking Up, How to Preserve Foods You Grow Naturally*, 1973, Emmaus, PA: Rodale Press.

Materials Needed: Pens, paper, chalkboard and chalk, or newsprint and markers.

Procedure

1. (15 minutes) The concept of solar agricultural dryers in presented as a potentially appropriate technology. A brief outline is given of the material to be covered during the following technical sessions, including a review of the objectives and purpose.

2. (15 minutes) Attachment V-1-A is reviewed, and the Trainer facilitates a discussion of grain drying theory, and the parameters of dryer designs.

3. (30 minutes) The questions for discussion (procedure 6 in *Session 1*) are reviewed. A recorder/reporter from each group presents a brief summary of the group's ideas. The Trainer

facilitates a general discussion about the potential impact of new preservation and storage technology upon people in developing countries. Some points that may be considered are:

- Will traditional division of labor be unbalanced?
- How will community rituals and practices surrounding harvest change or be disrupted?
- Will the harvest time be different, i.e., earlier, or out of balance with seasons or traditional perceptions of correct harvesting time?
- Will the foods, when dried, be acceptable according to the criteria of taste, texture, color, perceived nutritional value, and cultural requirements?
- How will health and nutrition status be improved or made worse by the introduction of solar agricultural dryers?
- Will solar agricultural dryers encourage self-sufficiency or create a dependence on outside expertise and assistance?

Option: After the discussion, the Trainees may be asked to write a few ideas concerning the potential impact of solar agricultural dryers, then trade papers with others in the group to compare perceptions.

4. (1 hour 15 minutes) Time is alloted for reading resource material.

SESSION 3
Planning a Nutritional Garden

Time: 2 hours (with additional time needed for individual work)

Objective: Given specifications for size, location, and end use, the Trainee will plan a garden plot that will provide food in at least three areas of nutritional needs, and that will utilize both crops and methods appropriate to the culture, climate, and economy of the Trainee's assigned country.

Overview: While overseas, it is important that PCV's maintain their own good health, as well as promote ideas and methods for local well-being and self-reliance. Gardening provides an excellent resource for both personal health maintenance and for local nutrition and health demonstrations. In rural communitites, it is natural to integrate health concepts with food production and technologies. Therefore, this session is provided so that the Trainees may practice planning a garden to address a number of concerns: the PCV's own health; local nutritional needs; economic self-reliance in the community; and appropriate uses of technology, energy, and the environment.

Suggested Resources

Jeavons, John, *How to Grow More Vegetables Than You Ever Thought Possible on Less Land Than You Can Imagine*, 1979, Palo Alto: Ecology Action.

Rodale, Robert, ed.,*The Basic Book of Organic Gardening*, Emmaus, PA: Rodale Publications.

"Polyculture Farming in the Cities", Warren Pierce in *Radical Agriculture*, Richard Merrill, ed., 1976, NY: Harper Colophon Books, pp. 224-256.

"The French Intensive System of Gardening", Steve Kaffka, and "Home Gardens as a Nutrition Intervention", Y.H. Yang, in *Small Scale Food Production - workshop proceedings*, 1976, Santa Barbara: LIFE (League for International Food Education), pp. 24-31; 60-80.

Pacey, Arnold, *Gardening for Better Nutrition*, 1978, London: Oxfam and Intermediate Technology Publications.

Attachment V-3-B : Guidelines for Planning a Garden

Materials Needed: Paper, pencils (optional: seeds, garden tools).

Procedure

1. (10 minutes) A brief introduction and an overview of the session's purpose are given.

2. (20 minutes) Guidelines for Planning a Garden (Attachment V-3-B) is distributed and reviewed.

3. (1 hour 30 minutes) Individual time is provided for Trainees to begin work on the exercise. They should be allowed several days to complete the planning, and encouraged to consult with one another during the process.

Optional Exercise: If time and space permit, the Trainees should be encouraged to plan and plant a garden at the training site, or at a nearby school or other community facility.

SESSION 4
Issues in Development and Diffusion of Appropriate Technology: Part I

Time: 2 hours

Objective: Through readings and discussion, the Trainee will develop and articulate an understanding of appropriate technology research and development policies, and the effect of such policies upon the diffusion of technological innovation.

Overview: In this session, some of the issues involved in developing a policy for appropriate technology are considered. The Trainer begins with a definition of policy terms, and then discusses principles influencing the successful implementation of appropriate technology. Through readings of case studies, and discussions, Trainees define and evaluate the role of research and development in international policies.

Suggested Resources

Jequier, Nicolas, *Appropriate Technology: Problems and Promises*, Chapter 6. (Handout)

McInerney, John, *Appropriate Technology: No Miracle Panacea for Economic Development*, World Bank Report, May-June, 1977.

Stainberg, Robert, *Devising a System for Appropriate Technology*, World Bank Report, July-August 1977.

Foster, George, *Traditional Societies and Technological Change*, pp. 175-190.

Attachment V-4-C : The World's First Solar Villagers Are Waiting to See

Attachment V-4-D : The Bewak Water Problem

Note: Chapter 6 in Jequier should be read prior to this session.

Procedure

1. (10 minutes) The Trainer outlines the sessions to follow, in order to familiarize the Trainees with issues concerning the development of appropriate technology policies by host countries. The terms "centralization" and "decentralization" are clarified to provide a context for discussion, and the considerations for appropriate technology policy development are presented (see Jequier pp. 69-70), including:

   There exists a constant and continuous development of appropriate technology not limited to formal centers, but including informal sectors of both developing countries and industrialized nations.

Centralization and coordination of research/development (in the areas of science and technology) tends to limit initiative and innovation on a local level; diversity of involvement is required.

New forms of organization, more efficient uses of existing resources, and more rapid transfer of knowledge are required in addition to technological development.

2. (15 minutes) Time is alloted for reading a case study (Attachment V-4-C).

3. (5 minutes) The term "culture of the bureaucracy" is presented and explained (see Foster, pp. 175-190).

4. (20 minutes) Small groups are formed. and a group facilitator is named for each. The following questions are discussed in relation to the case study previously read:

Why do you think the Department of Energy selected the particular town for a project site?

Do you think the project has been successful?

What does it seem that success signifies to D.O.E. in this situation?

In this case study, is the energy centralized or decentralized?

What advantages and disadvantages are there for the type of research and development used in this project?

5. (1 hour) The Trainees form two discussion groups. Attachment V-4-D is distributed and the format is followed for reading and discussing it. Each page of the study should be read and discussed in approximately 10-15 minutes.

6. (10 minutes) The following points are emphasized by the Trainer:

- The present system of research and development is too geographically and administratively centralized in many countries.
- There is a need for local control (decentralization) in order to provide for community-based research and development of appropriate technology.
- Central governments must support technological innovation on a national level to promote wide and active participation of all sectors of the population.
- Decentralization fosters local initiative and self-reliance.

SESSION 5
Passive Solar House Design

(Note: Sessions 5, 13, and 17 -- Passive Solar House Design and Natural Cooling -- may be included as options. Depending upon individual progress, the Trainees may wish to instead utilize these periods to complete agricultural dryer construction, design modifications, or assessment of the units.)

Time: 2 hours

Objective: Given the necessary data concerning a passive solar house, the Trainee will determine (to a 98% accuracy) heat gain and loss, and required solar heat storage volume.

Overview: In order to understand the theory of passive solar house design, the Trainees examine and discuss several designs, as well as sample calculations illustrating heat gain and loss, and storage volume. Based on that experience, the Trainees then practice making similar calculations for a semi-solar house, and suggest methods of improving the house's energy efficiency.

Suggested Resources

Mazria, Edward, *Passive Solar Energy Book*, pp. 28-62.

Anderson, Bruce, *The Solar Home Book*, pp. 76-113.

Attachment V-5-E : South-facing Glass

Attachment V-5-F : Combined System

Attachment V-5-G : Overhead Utilization

Attachment V-5-H : Total Environmental/Solar Orientation

Attachment V-5-I : Air Collector System

Attachment V-5-J : Warm Air Distribution from Rock Storage

Attachment V-5-K : Solar Heat Gain and Heat Loss

Materials Needed: Chalkboard, chalk, pencils, paper.

Procedure

1. (10 minutes) The session is outlined, and a brief overview given.

2. (50 minutes) Attachments V-5-E through V-5-J are distributed and discussed, with an emphasis on the relative advantages and drawbacks of each passive solar design. It is recommended that existing solar houses in the training area be used as examples.

3. (40 minutes) Attachment V-5-K : Heat gain & Heat Loss, is distributed and explained. Time is given for the Trainees to work through the calculations.

4. (20 minutes) The calculations are discussed and corrected. Any questions or misunderstandings are addressed and resolved.

SESSION 6
Principles of Agricultural Drying: Models

Time: 2 hours

Interim Objective: Given the necessary materials to conduct simple experiments, the Trainee will develop and demonstrate an understanding of the relationship of vent size, height, temperature, and convective air flow in a solar chimney or dryer.

Overview: Two important considerations in the design of a solar agricultural dryer are the temperature and air flow, both of which can be controlled by proper sizing and placement of the air vents. In this session, the Trainees assemble a simple solar chimney, in which they regulate the size of the vents and the height between the inlet and outlet. They experiment with the model, and record the variations in temperature and air flow as the vent and height factors are manipulated. On the basis of their observations, the Trainees prepare a simple definition which describes the relationship among the variables.

Suggested Resources

Attachment V-6-L : Guidelines for Solar Chimney Experiment

Attachment V-6-M : Data Collection Sheet

Materials Needed: (per group) four 60 cm sections of black stovepipe (10 cm diameter) which can be interconnected; a roll of wide heavy-duty tape (duct tape); thermometers; a watch (preferably, a stopwatch); light, airborne objects or matter, e.g. feathers, down, dust particles, smoke.

Procedure

1. (15 minutes) The Attachments V-6-L and V-6-M are distributed and the purpose of the session is explained. Small groups of people (3-4) read and discuss the solar chimney guidelines, and ascertain that all understand the procedures.

2. (1 hour 15 minutes) The groups devise and conduct the experiments according to the guidelines presented.

3. (30 minutes) The groups analyze their observations and data from the experiments, and write a description of the interrelationship of vent size and height to the temperature and air flow in the solar chimney.

SESSION 7
Development of Sizing Formula

Time: 2 hours

Interim Objective: Given the necessary data, the Trainee will accurately determine the vent area required to provide sufficient air flow and temperature within the food chamber of a solar agricultural dryer.

Overview: The Trainees participate in the development of the vent-sizing formula, and practice applying it in a variety of hypothetical situations.

Suggested Resources

Attachment V-7-N : Vent Sizing Worksheets A and B

Materials Needed: Newsprint, markers, or chalkboard and chalk, pencils, paper.

Procedure

1. (10 minutes) An overview of the session is given, and the procedures for formula development explained.

2. (40 minutes) The variables are presented in regard to their relationship to one another. The following terms are posted:

Vent area: the area, in square centimeters, of the lower intake vent and/or the upper exhaust vent (whichever is smaller).

Heat gain: the amount of solar heat being absorbed by the collector, in Kgcal/hr (found by multiplying the hourly insolation, in Kgcal/m^2 hr, by the aperture of the collector, in m^2).

Height: the distance between the lower intake vent and the upper exhaust vent.

Change in temperature: the difference, in degrees centigrade, between the exhaust air temperature (or the maximum allowable temperature for the product) and the ambient, or inlet, air temperature.

Note: the term "amount of temperature change" may be written Δt when working with formulas.

After the definitions are reviewed, the Trainees are asked:

If the heat gain of a solar agricultural dryer is doubled, will the vent area need to be larger or smaller to maintain the same amount of temperature change and air flow? By how much?

Previous Page Blank

If a chimney is placed on a solar agricultural dryer, and doubles the dryer's height, will the vent area need to be larger or smaller to maintain the same amount of temperature change and air flow?

If a greater amount of temperature change is required in an agricultural dryer, and the air flow is to remain the same, will the vent area need to be larger or smaller?

3. (35 minutes) The Trainer guides the development of the formula by working through the following steps with the Trainees:

Since the vent area is the variable to be found, it is placed on the left side of the equation sign:

$$\text{Vent area} = \underline{\qquad\qquad}$$

Since an increase in heat gain necessitates an increase in the vent area in order to maintain the same flow, the heat gain will appear on the upper half of the design formula:

$$\text{Vent area} = \frac{\text{heat gain}}{\qquad}$$

Since an increase in the height of the dryer necessitates a decrease in vent size in order to maintain the same flow, the equation now looks like this:

$$\text{Vent area} = \frac{\text{heat gain}}{(\text{height})}$$

Since an increase in the amount of temperature change requires the vent size to be reduced, the equation now looks like this:

$$\text{Vent area} = \frac{\text{heat gain}}{(\text{height})\ (\Delta t)}$$

The vent area sizing formula was derived from other formulas, and from empirical data; it reads:

$$\text{Vent area} = \frac{\text{heat gain}}{(.01)\sqrt{\text{height} \times \Delta t} \times \Delta t}$$

Note: -(.01) is a constant factor
-vent area is in square centimeters
-if the heat gain is in Kgcal/hr., the height is in meters (m) and the temperature is in degrees centigrade (^{o}C), then the formula reads:

$$\text{Vent area } (Cm^2) = \frac{\text{heat gain (Kgcal/hr.)}}{(.01)\sqrt{\text{height(m)} \times \Delta t(^oC)} \times \Delta t(^oC)}$$

4. (15 minutes) The Trainer demonstrates the formula with a sample problem:

Insolation in 1 hour = 800 Kgcal/m^2
Area of aperture = $2m^2$
Change in temperature (Δt) = 40°C
Vertical height (the vertical distance between the air intake and the air outlet) = 2 meters

$$\text{Vent area } (Cm^2) = \frac{800 \text{ Kgcal/m}^2 \text{ hr} \times 2m^2}{(.01)\sqrt{2m \times 40^oC} \times 40^oC}$$

= 44.4 cm^2 upper vent area

<u>and</u>

44.4 cm^2 lower vent area

Note: It is important that the Trainees recognize that many variations exist apart from the example presented. For example, the drying of grain requires 590 Kgcal for every kilogram of water that is evaporated; therefore, the internal temperature of the dryer would be effectively reduced. The air flow would also decelerate, due to friction caused by the air passing through and around the food trays. In order to be sure of sufficient vent size, the most demanding or extreme application should be established, and adjustable doors or shutters then constructed to allow for decreasing size variations. To find the largest vent area needed, use "worst case" numbers in the formula, i.e., a reasonably high number for heat gain, and a reasonably low number for Δt. For example, a fairly high insolation rate might be 900 Kgcal/m^2 hr. This number is multiplied by the collector aperture to find the heat gain. A fairly small Δt might be 10°C. (This assumes that the agricultural product requires no higher than 45°C, and daytime temperatures of 35°C are available.)

5. (10 minutes) One set of hypothetical variables is provided, and time is provided for the Trainees to work through calculations, and check answers.

Option: A different set of hypothetical variables is provided to small groups of 3-5 people. The calculations are performed, and checked within the group; then the group's answer and method of calculation is presented.

7. (10 minutes) Attachment V-7-N is distributed. The Trainees are given the worksheets containing sets of variables, which they are assigned to complete before the next session.

Option: If there is time, the calculations may be completed during the session.

SESSION 8
Solar Agricultural Dryer Design: Part I

Time: 2 hours

Interim Objective: The Trainee will design a culturally-feasible, low-cost, solar agricultural dryer which meets specified requirements of size, venting, and operation.

Overview: The Trainees form small construction groups and, based on a hypothetical situation, specify the criteria that they will use to design an agricultural dryer. They will then examine a variety of dryer designs and will discuss the benefits and disadvantages of each, especially those which may meet the requirements of the group's proposed situation.

Suggested Resources

A Survey of Solar Agricultural Dryers, Brace Research Institute.

Small Farm Grain Storage, Volunteers in Technical Assistance.

Proceedings of the Solar Drying Workshop, Ministry of Energy of the Philippines.

Materials Needed: Newsprint, marking pens.

Procedure

1. (15 minutes) The Trainer briefly outlines the activity, and the Trainees form construction groups of 3-4 people (according to region or country of assignment).

2. (45 minutes) The groups each devise a hypothetical, but potential situation in which they, as PCVs, might assist a community or family with the construction of a solar agricultural dryer. Based upon the latitutde and the insolation of the training site, so that the dryer will function efficiently during training, the groups determine:

- crop or crops to be dried
- amounts to be dried
- time of the year when harvest occurs
- moisture of crop at harvest
- acceptable moisture for storage
- relative humidity of climatic zone
- appropriate drying methods that retain nutrients and preserve freshness

3. (45 minutes) Various alternative dryer designs are reviewed for potential uses (see *suggested resources*). The construction groups evaluate each design presented, using the following questions as guidelines for specific design requirements:

Is the collector large enough to provide sufficient heat?

Are the vents adjustable and/or large enough to allow adequate air flow?

Can the collector tilt be built or adjusted for the specified latitude and time of year?

Is the size adequate for the amount of material to be dried?

Can the system be built efficiently and easily with low-cost materials?

Is it weather and pest proof?

Are there any design features that would make it impractical in the proposed socio-cultural setting?

4. (15 minutes) In each construction group, people discuss the relative merits and disadvantages of each design, and ways in which the designs might be adapted to meet the specific requirements of the group (as specified in procedure 2).

SESSION 9
Solar Agricultural Dryer Design: Part II

Time: 3 hours 30 minutes

Interim Objective: Same as for *Session 8*

Overview: Based on the information provided and previously discussed in *Session 8*, the Trainees generate a number of ideas for solar agricultural dryers that meet the design requirements for potential use in Peace Corps service. By consensus, a design is chosen, plans are drawn, and a list of materials is compiled. At the end of the session, each construction group analyzes the methods of decision-making and problem-solving utilized during the activities.

Suggested Resources: See *Session 8*

Materials Needed: Newsprint, marking pens.

Procedure

1. (15 minutes) The Trainer outlines the session's activities, emphasizing that all group members should actively participate in the design process and decision-making.

2. (1 hour) Each group generates ideas for as many solar agricultural dryer designs as possible; these should meet the predetermined requirements of size and operation within the parameters of the group's hypothetical situation. Variations in design may include:

- venting schemes
- food rack design
- materials
- size and shape of box
- placement of access doors

Each design should be put on a separate sheet of paper so that it may be individually reviewed.

3. (30 minutes) By consensus, the groups select the best design or best design components for the dryer they will build. This design must be submitted to the Trainer for review, acceptance, and/or modifications. The Trainer assesses each group's design on the basis of the following criteria:

- design feasibility (can it be built within 30 hours and will it function efficiently?)
- low cost
- appropriate insulation where needed
- proper aperture size and tilt
- adequate venting area with room for adjustments
- appropriate rack design for the specific crop to be dried
- simplicity of construction -- minimal need for high skill input

- sufficient vertical height between vents for good convective air flow
- minimum, but adequate material usage
- ease of operation, maintenance, and repair

4. (1 hour) After each group's final design has been approved, detailed plans are drawn, signifying the dimensions of all design components. A comprehensive materials list is then prepared, including the quantity and size of all necessary parts.

5. (30 minutes) Each group evaluates the problem-solving exercise, using the following guidelines:

Was there a particular pattern to problem-solving?

What technique was most effective for solving problems or reaching a consensus decision? Least effective?

Was each participant satisfied with the final design? Does everyone feel the design will work? Does everyone understand how the dryer will be constructed and how it will function?

6. (15 minutes) The large group reconvenes, and the Trainees discuss any improvements or changes they perceive in their problem-solving abilities during the program, and the relevance of such skills to their future assignments as appropriate technology extensionists.

SESSION 10
Women and the Development Process

(Adapted from *Women in Development: A Volunteer Training Resource Book*)

Time: 2 hours 10 minutes

Objective: Through readings, discussion, and analysis of a case study, the Trainee will thoroughly describe the consequences of excluding women from the various stages in the development process; and will identify viable ways to reverse the potentially negative effects of development on women.

Overview: Using a case study as the focus of this session, the Trainees analyze the consequences of development projects that do not include the active participation of women. Based upon the conclusions derived from the readings, discussion, and the case study, the Trainees suggest ways of improving development efforts -- including their future role as appropriate technology extensionists -- so that women may benefit from development projects and technological innovation.

Suggested Resources

Childers, Erskine, "The Development Approach to Liberation: Suggestions for Planning", in *WID: A Volunteer Training Resource Book.*

Dulansey, Maryanne, *Women in Development: A Training Module*, Consulatants in Development, Washington, D.C. 1977.

Newland, Kathleen, *The Sisterhood of Man*, Worldwatch Institute, Washington, D.C. 1979.

Boserup, Ester and C. Liljencrantz, *Integration of Women in Development*, pp. 40-41.

Subcommittee on Women in Development/Committee on Development Assistance, *Criteria for Evaluation of Development Projects Involving Women*, ACVAFS, p. 5)

Attachment V-10-P : Case Study and Questions for Discussion

Materials Needed: Newsprint, markers, tape, pens, paper.

Note: The Attachment V-10-P : Case Study and Questions for Discussion, are distributed prior to the session; the case study should be read and notes taken in response to each study question. However, if time is not a constraint, the Trainees may read the study and take notes on the questions as a beginning activity of the session.

Procedure

1. (15 minutes) An outline of the session's activities is presented, and the Trainer asks for a brief summary of the case study, or gives a short precis, covering the main events and points, without interpretation of the consequences. A few minutes are alloted so that the case study may be reviewed, and any additional notes made.

2. (40 minutes) In groups of 4-6, the Trainees discuss the case study, using the questions for discussion. A group recorder/reporter writes on newsprint a summary of the statements made concerning each question.

Note: The Trainer should circulate and observe the groups; "strong" groups should be selected to report on the first and last questions. If there are more than three groups, more than one group may report on each question.

3. (15 minutes) A group reports on question #1. The recorder/reporter summarizes the discussion (with possible assistance from group members) and any comments or questions are accepted. Some questions for consideration are:

How could the local ministry have influenced the planners' assumptions?

Did the planners seem to recognize their assumption as a stumbling block, or did they explain their problems as coming from elsewhere?

Which effects were superficial, and which were profound?

Points to be considered include that assumptions:

- must be explicit in order to assess their influence in project planning and implemention
- can be checked with some degree of accuracy by consulting with a diverse number of people involved in some way with the project
- should constantly be identified, and their effects assessed.

4. (15 minutes) The procedure is the same as for question #1. However, the report is divided into two parts: Community and Women, and Men and Families. Questions for consideration are:

Were the effects predicted by the planners? Why?

Were the effects the same (either positive or negative) for both the community and the women? How is this explained?

Points to be considered include:

- Projects are often viewed as effective or positive when technical or economic results are achieved, regardless

of the social or psychological impact.

- The 'invisibility' of women often contributes to a false assumption that a project is effective and appropriate; this is a consequence of ineffective planning, and insentitivity to those most affected by the development process.

- Much of women's work is not calculated in the GNP.

- Technological advances have traditionally been offered to men.

- Moving women into the cash economy often diminishes their uncalculated and important contributions to the family and community economy.

- Technological innovation may displace important social systems.

- Economic advances in cities encourage men to leave the rural areas, leaving women with added burdens to bear.

5. (15 minutes) The report is given concerning Men and Families. Some questions for consideration are:

Why are the effects of development different on men and women?

When do men suffer the ill effects of development?

How is the family structure changing; and how can those changes be supported by new traditions and social systems?

Points to be considered include:

- Sex role patterns determine the way in which development affects men and women.

- As family systems change, there must be new support systems created.

- Both men and women may be negatively affected by the development process; however, men often have more control over the process.

6. (15 minutes) The report to question #3 is presented. Some questions that may stimulate discussion are:

What is an appropriate role for an appropriate technology extensionist in the planning process?

Why were the suggested actions selected?

What is hoped to be achieved with different actions in the planning and/or implementation stages?

7. (15 minutes) The Trainees form small groups again, to discuss ways in which a PCV (an outsider, a foreigner) might include women in development projects so as to reverse the potentially negative effects of development on women. Each person is assigned to write a statement, to be evaluated according to the checklist for the participation of women in development projects (Boserup, pp. 40-41) and according to the criteria for evaluation of development projects involving women (Subcommittee on Women in Development/Committee on Development Assistance, ACVAFS, p. 5)

SESSION 11
Site Selection and Preparation

Time: 2 hours

Interim Objective: *Phase IV, Session 13*

Overview: After learning the criteria for siting a solar agricultural dryer, the Trainees select potential sites and prepare a shade map for each. When a site is chosen, it is prepared for the placement of the dryer.

Procedure

1. (15 minutes) An agenda is presented for the session. The Trainer also states some basic criteria for the site of an agricultural dryer, including that it be:

   - convenient and accessible, i.e., near the crop harvest or storage areas
   - protected from wind, dust, and excessive rain
   - in full sunlight

2. (1 hour) Each construction group selects a potential site and prepares a shade map (*Session IV-13:* Shade Mapping and Site Selection). If the site is considered appropriate, the group goes on to the next procedure; if not, another site is selected and analyzed.

3. (45 minutes) The ground is prepared for the dryer designs.

Note: The dryers are not as heavy as the water heaters, nor as permanent; nor do they need to be completely rigid. Consequently, an elaborate foundation is not generally required, unless considerations are specified.

SESSION 12
Materials Acquisition and Construction of the Dryer: Part I

Time: 4 hours

Interim Objective: The Trainee will conduct an analysis of the source and relative availability of materials, including implications for locally appropriate, low-cost construction in resource-poor countries.

Interim Objective: Provided with sufficient materials, the Trainee will construct the food drying chamber of a solar dryer to meet specified design criteria of strength, size, and proper weather-proofing.

Overview: The Trainees revise their materials list and assemble the supplies necessary to construct their solar agricultural dryers. In work groups, the Trainees discuss and determine the order in which the dryer will be built, and then begin working on the drying chamber.

Suggested Resources

Local materials availability list (to be prepared at each training site).

Materials Needed: Tools and materials as necessary to construct specific designs.

Procedure

1. (10 minutes) The Trainer outlines the session.

2. (30 minutes) Using a local materials availability checklist (to be developed by the training staff for the local training site), and the individual group lists of materials (prepared in *Session 9*), each work group assesses the availability and appropriatenss of construction supplies to be used in the particular design chosen. Based on this assessment, both the designs and materials lists are revised, if necessary, in order to reduce cost without appreciably diminishing quality.

Note: The Trainer should examine the revised list to ascertain that the proposed design is still feasible.

3. (1 hour) Using the revised materials lists, the groups assemble the necessary supplies for constructing the solar dryer, then set them aside in an appropriate storage area until they are needed.

4. (30 minutes) With the Trainer's assistance, the members of each work group determine the sequence in which they will construct their solar dryer. Although the procedures will vary according to individual designs, the general order of construction is as follows:

Previous Page Blank

a. the support system and/or insulated base
b. the drying chamber frame
c. the backing, sides, and bottom
d. the air circulation system
e. rack runners or supports
f. weatherization
g. glazing assembly
h. drying racks

During this time, members of each group plan the way in which they will work together to construct the dryer in the alloted 14 hours.

Option: The groups may decide to conduct the PCV role-play exercise. (See *Phase III-Session 8, Attachment III-8-K*)

5. (1 hour 20 minutes) Construction is begun on the drying chamber.

Note: At this point, the actual construction of the solar agricultural dryer takes place. The following procedures apply to the construction of a simple box dryer. Since a variety of designs, techniques, and materials may be used, the content and order of the following construction sessions may need to be modified.

The Trainees construct the dryer box, using the following guidelines:

Construct an above-ground stand or base which will support the weight of the dryer.

Cut and assemble the basic framework of the drying chamber.

Attach the walls of the dryer box to the framework. (If necessary, build a double wall to hold insulation.)

6. (15 minutes) The session is evaluated by each group, and observations are shared about the process of working together.

7. (15 minutes) The site is cleaned and materials and tools are stored.

SESSION 13
House Design in Four Climates (Optional; see *Session 5*)

Time: 2 hours

Interim Objective: Given descriptions of four different climates, the Trainee will satisfactorily explain and describe a naturally-heated and cooled structure for each climate.

Overview: The four basic climate zones are described in regard to the indigenous cultures of each; also discussed are the ways in which architectural styles have evolved based on climate and available materials. The Trainees then design houses or other structures suitable for those climates.

Suggested Resources

Olgyay, Victor, *Design with Climate*, Princeton Press, NJ.

Attachment V-13-Q : Design with Climate Worksheet

Materials Needed: Newsprint, markers, rulers, easels, thumbtacks.

Procedure

1. (15 minutes) An outline and agenda for the session are presented, and the time limitations are explained.

2. (50 minutes) The four basic world climates are described: hot arid, hot humid, temperate, and cool. It should be pointed out that in the U.S., typical cities in the above climates are, respectively: Phoenix, Miami, New York, and Minneapolis. If any Trainees are familiar with the cities mentioned, they are encouraged to explain to the group something about the climate, and any indigenous, natural or energy efficient structures that may exist there.

Design illustrations are given (see *Design with Climate*), and discussion should focus on the following design characteristics in each climate:

- use of south glass
- internal thermal mass
- exterior insulation
- exterior colors
- vent utilization
- local construction techniques

3. (25 minutes) The Trainees divide into four groups, and each group is assigned one climate for which to design a house, utilizing the design characteristics mentioned in procedure #2. Each group should list the 2 or 3 most important characteristics that were considered in the structure design (Attachment V-13-Q).

4. (30 minutes) Each group briefly presents the design for analysis discussion, and suggested modifications (corrections or additions).

SESSION 14
Construction of the Solar Agricultural Dryer: Part II

Time: 6 hours

Interim Objective: Same as for *Session 12*

Overview: Construction of the agricultural dryer box continues, and the glazing is installed. Trainees discuss the skills necessary to build the dryer, and examine any improvement or change in their individual abilities since the beginning of the training program.

Materials Needed: Hand tools and supplies for individual design specifications.

Procedure

1. (15 minutes) An overview is given, and the activities reviewed. The Trainees are instructed to form their construction groups, and formulate an assessment list in order to evaluate individual progress in the various skills necessary for constructing a solar agricultural dryer. The list should include abilities in a number of areas: cognitive skills, such as mathematics; communication and extension skills; and technical expertise in construction, design, and planning. Each group should develop a checklist to be used by each member, that both states the specific skills and measures the Trainee's progress during the training program.

2. (45 minutes) In construction groups, the Trainees formulate the assessment checklist, and fill it out individually. When each person has finished, the skills listed should be ranked by each person, indicating the most to the least important in constructing the dryer. Rankings should be discussed among the group members; perceptions of skills improvement may be shared.

Note: During this time, the Trainer should circulate and assist any groups that appear to be needing help. One form of checklist may be a listing of skills in one column, and the weeks of training in a number of other columns. The Trainees may indicate with checks, numbers, or statements, the perceived changes in expertise during the program.

3. (4 hours 15 minutes) The work on the dryer construction continues. Tasks to be completed are:

- Glazing--clear glass, fiberglass, or plastic--should be installed in such a way that it can be removed (or so that it can serve as the access door).

- Functional and convenient access doors should be constructed.

- Proper sized vents should be installed.

As the work continues on the various tasks, the Trainer ascertains that:

-the box is strong and tightly constructed, with no cracks where insects could enter.

-the glazing is cut to the proper size and installed correctly.

-the aperture has the right inclination for optimal solar gain.

5. (30 minutes) The Trainees discuss skills improvement, and focus on the major areas that they would like to improve. Some questions for discussion are:

How might skills improve during Peace Corps service?

What types of situations are most conducive to skills acquisition or improvement?

What specific skills are important to learn now?

6. (15 minutes) The site is cleaned, and tools and materials are stored.

SESSION 15
Construction of Solar Agricultural Dryers: Part III

Time: 6 hours

Interim Objective: See *Session 12*. The Trainee will construct a set of drying racks to meet the design criteria of size, durability, and convenience.

Overview: During the final stages of agricultural dryer construction, the Trainees identify and concentrate on specific skills that need improvement. There is an emphasis on mutual assistance, which is later discussed in relation to the role of a learning facilitator in rural development work.

Materials Needed: Tools and construction materials as needed.

Procedure

1. (15 minutes) In construction groups, the Trainees plan the division and sequence of tasks for the day's activities. Each person decides upon one skill that needs improvement and pairs with another group member who might be of assistance. For example, if screening for use in dryer racks is to be woven, someone in the group may already have weaving skills, which may be passed to another group member. The facilitator need not be highly adept at the skill in order to assist another person; during the practice, both the facilitator and the learner may improve their expertise.

2. (3 hours 30 minutes) The work groups continue in the construction of the agricultural dryer. The main tasks for the day are:

   - Construction of the drying racks.

   - Weatherization of the entire dryer inside and out.

   - Completion of the construction.

3. (15 minutes) The Trainees evaluate the mutual learning experience, answering the following questions:

   How do you believe you learn best?

   Did the person helping you facilitate the learning experience?

   Was it a mutual learning experience?

   What types of feedback are constructive? Destructive?

   Do you feel that the skill you chose was appreciably improved?

4. (15 minutes) The Trainees discuss the areas that need to be completed on the dryer. Individually, they decide on another area requiring skill improvement. In this exercise, the previous roles of facilitator and learner should be revised, so that all Trainees experience both roles.

5. (1 hour 15 minutes) The Trainees complete construction of the solar agricultural dryer. The Trainer and Trainees evaluate the finished product on the basis of the following questions:

Is it durable? Can it withstand extended use?

Has it been properly weatherproofed?

Does it meet the design specifications?

Are the vents properly placed and sized?

Is it oriented in the proper position?

Based on aesthetics and/or function, would it be acceptable to a rural villager in a developing country?

Is it pest-proof? Are there cracks where insects can enter?

Could it have been built more easily and at lower cost?

6. (15 minutes) Trainees discuss the learning experience and place it in the context of a developing country, using the following discussion questions:

What form of learning do you think a rural villager would best assimilate and use?

How important is it that the learning be mutual?

What specific skills used in the construction of the agricultural dryer would be most difficult for a rural villager to learn?

Which skills would be most difficult to teach?

7. (15 minutes) The site is cleaned, and tools and materials are stored.

SESSION 16
Developing a Dryer Assessment Plan

Time: 2 hours

Interim Objective: The Trainee will correctly use, demonstrate, and assess a solar agricultural dryer, and will make necessary design modifications to improve its cultural viability, and ability to preserve food in a way that maximizes nutritional value, freshness, and taste.

Overview: The Trainees establish a format for experimentation with food drying in order to assess the usefulness, efficiency and viability of the solar agricultural dryers.

Suggested Resources

See *Sessions 1 and 2*

Thong-Ngee Goh, "Planning of Data Collection and Analysis for Solar Drying Field Tests" in *Proceedings of the Solar Drying Workshop.*

Materials Needed: Scale, thermometer, instruments for food preparation.

Procedure

1. (15 minutes) The article, "Planning of Data Collection and Analysis for Solar Drying Field Tests" is distributed and read.

2. (15 minutes) The relevant points of the reading are discussed, including:

- factors in efficient utilization of solar energy in drying
- evaluation methods
- the importance of field trials
- climatic factors and environmental conditions
- controllable dryer design parameters
- design stage tests
- operational stage tests
- data collection and analysis

3. (15 minutes) The Trainer presents a general format for assessing the dryer, and explains that the food should be weighed before and after drying in order to determine moisture loss. All pertinent data should be recorded, including:

- type of food
- time since harvest
- special treatments (e.g. addition of salt or sulfur)
- amount of food in dryer
- time left to dry
- climatic condition

- temperature inside and outside of dryer
- relative humidity (if known)
- vent size and/or any changes in vent size
- modifications during the drying time

A final assessment report will be due for *Session 24*.

4. (30 minutes) Each group develops a format to assess the capabilities of the dryer. Experimentation with drying foods should continue over a period of several days; time will be alloted during *Session 19* and *22* to record data, although data collection should occur throughout the experimentation/assessment period. The format should include:

a. Assessment methodology and objective of the experiment.
b. The type of data to be obtained.
c. The time frame for procedural steps (e.g., loading, unloading, data collection).
d. A mechanism for comparing traditional open solar drying.

5. (45 minutes) The Trainer leads a discussion on preparing food for drying, or distributes literature describing the processes involved (see *suggested resources*). Each group, according to the assessment plan, prepares the grain or produce for the next day's evaluation.

SESSION 17 [Optional; see *Session 5*]
Natural Cooling

Time: 1 hour

Interim Objective: The Trainee will accurately describe natural cooling techniques and devices for various structures in different climates.

Overview: Natural cooling techniques are discussed, and are described as either reducing or eliminating solar gain, or maximizing heat loss.

Suggested Resources

Mazria, Edward, *The Passive Solar Energy Book*, pp. 262-266.

VITA, *Village Technology Handbook*, pp. 267-272.

Procedure

1. (10 minutes) An overview of the session is given.

2. (35 minutes) In pairs or small groups, the Trainees brainstorm as many natural cooling devices and techniques as they can (15 minutes). Each idea generated is then described in as much detail as possible (20 minutes). Examples of some devices and techniques are: thick, exterior walls and roofs; light-colored exteriors; naturally-induced ventilation (wind scoops, high and low vents); evaporative cooling (see VITA resource); shading (vegetation, overhangs); limited amounts of east and west glass.

3. (15 minutes) The lists are shared, and similarities of each device or technique are pointed out. Some similarities that should be discussed are:

- the hot sun is kept out
- ventilation is provided (convection)
- use is made of evaporative, conductive or radiant heat loss
- all designs and devices basically eliminate solar (heat) gains and maximize losses.

SESSION 18
Food Supply: The Relationship Between Agriculture and Nutrition

Time: 3

Objective: The Trainee will examine processes and issues concerning food production, distribution and consumption; and will suggest ways of satisfying dietary and health requirements within the environmental, economic, cultural and social constraints that exist in the developing world.

Overview: The issues and factors that influence health and nutrition are complex and largely inter-related. In this session, the Trainees are encouraged to examine the issues of food supply, demand, and pricing; and to relate their conclusions to environmental, energy, and health concerns of people throughout the world. Through an analysis of economic, cultural, and social constraints inherent in planning a nutritionally adequate, low-budget diet, the Trainees recommend ways in which a rural family can meet dietary and health requirements within those limitations.

Suggested Resources

Merrill, Richard, "Toward a Self-Sustaining Agriculture, in *Radical Agriculture*, R. Merrill, ed.; Harper Colophon Books: NY., 1977.

Brown, Lester, *By Bread Alone*, Overseas Development Council, Praeger Publishers: NY.

Lappe, Frances Mo. "The Banality of Hunger", in *Food for People, Not For Profit*, C. Lerza and M. Jacobson, eds.

Commoner, Barry, "The Uses of Power, in *The Feeding Web*, J. Gussow, ed.

Katz, Deborah, *Food: Where Nutrition, Politics, and Culture Meet*, pp. 125-208. (Handout)

Attachment V-18-R : The Factors Influencing the Price of Food

Attachment V-18-S : Planning a Low-budget, Nutritious, and Culturally Appropriate Diet

Note: Before the session, it is recommended that the Trainees read pp. 124-127; 130-136; 146-149; 174-186 in Katz; and any of the other materials suggested above.

Materials Needed: Newsprint, markers, pens, paper.

Procedure

1. (15 minutes) The Trainer gives a talk concerning food supply, including:

Previous Page Blank

- The structure of the food system (the food 'industry', the environment, and agriculture, pp. 124-136 in *Food: Where Nutrition, Politics, and Culture Meet*).

- A review of world hunger issues (dimension and effects of the problems, suggested approaches to solutions, pp. 146-149 in *Food: Where Nutrition, Politics, and Culture Meet*).

2. (15 minutes) The factors that influence the price of food are discussed (see pp. 137-138 in *Food: Where Nutriton, Politics, and Culture Meet*). The Trainer may ask for some categories that influence pricing, e.g., supply, demand, inputs (i.e. water, fertilizers, seeds, labor, machinery), structures, product changes etc.; then note the categories and any specific factors that are mentioned for each. If the Trainer wishes, some discussion guidelines may be distributed (pp. 137-138, ibid).

3. (1 hour) The Trainees form groups of 4-6, and the Trainer gives instruction for the activity (see Attachment V-18-R: The Factors Influencing the Price Food). The situation cards are distributed at five or ten-minute intervals, and the situations and group predictions are discussed at the end of each interval. It should be explained that the predictions are simplified, and that short and long range effects may differ. The predictions may be stated as follows:

situation	prediction
A	demand rises - price rises
B	demand falls - price falls
C	supply rises - price falls
D	supply falls - price rises
E	input costs rise - prices rise
F	increased concentration of ownership - price rises
G	input costs rise - price rises
H	decreased concentration of ownership - price falls

When all predictions have been made, the large group (or small groups) discuss the questions in Attachment V-18-R , and any aspects of food supply: production, distribution, and consumption, that relate to the exercise.

4. (10 minutes) The Trainer introduces the exercise: planning a low-budget, nutritious, and culturally appropriate diet (Attachment V-18-S), and asks the Trainees to consider, while completing this exercise, the relationship of food supply to nutrition and health status among subsistence-level people.

5. (1 hour 20 minutes) Time is provided for work on Attachment V-18-S . If the exercise is completed before the end of the session, it is helpful to discuss the study questions in order to reinforce the Trainees' understanding of the economic, cultural, and social constraints inherent in planning a nutritionally adequate diet. If no time remains, the exercise should be completed before the next session, and discussed at the start of

the next session. When the exercise has been completed, it should be collected for evaluation.

Assessment criteria are:

Did the Trainee include sufficient quantity and variety of nutrients in the diet planned?

Were the indicated economic, social, and cultural considerations followed?

Was the diet feasible for actual use?

Did the Trainee plan and answer the questions in an apparently thoughtful manner?

SESSION 19
Dryer Assessment and Modifications: Part I

Time: 2 hours

Interim Objective: See *Session 16*

Overview: The experiments are monitored, and data is collected from the solar agricultural dryers. As part of the assessment procedure, the potential impact of solar dryers is examined in regard to health implications and the role of women in food preservation and storage.

Suggested Resources

See *Sessions 1 and 2*

Materials Needed: See *Session 16;* Newsprint, markers.

Note: The food that was previously prepared for drying (*Session 16*) should be loaded into the dryer early in the day (before this session).

Procedure

1. (45 minutes) The construction groups meet to collect data from the dryer, and discuss observations about the initial performance of the device. Some questions to be discussed are:

   Is the temperature in the dryer adequate, too low, or excessive for the food being preserved? (Many foods lose nutritional value when they are exposed to excessive heat; if the temperature is not high enough, foods may rot, or lose flavor or nutrients.)

   Is the air flow sufficient?

   Are modifications needed to improve the performance of the dryer?

2. (45 minutes) Each construction group is provided with newsprint and markers. A recorder is selected, and the group suggests potential ways in which the dryers might influence the following areas:

   - health and nutrition
   - local culture (rituals, beliefs, ceremonies, harvest cycle)
   - local perception of new technology (acceptance or rejection)
   - women's roles in harvest, preparation, and storage

   The recorder summarizes the group's ideas, and the lists are posted for examination by all the groups.

   Note: The Trainer should give several examples before the exercise, in order to facilitate the activity, and should mention that both

Previous Page Blank

positive and negative influences of solar agricultural dryers are to be included. A health and nutrition example follows:

- provides a more constant and abundant supply of foods
- prevents losses due to pests and weather
- if not constructed well, causes many health problems: people not trained properly in the use of the device may lose their crop, or eat spoiled food.

3. (30 minutes) Final data collection is made, and if necessary, more food is prepared for drying the next day. Any food that is completely dried should be removed and stored.

SESSION 20
Extension Methodologies

Time: 2 hours

Objective: The Trainee will develop and demonstrate effective extension skills (e.g., audio or visual presentations, story-telling, workshops) to communicate information to villagers concerning the appropriate use of solar agricultural dryers to promote health and nutrition, and local self-reliance.

Overview: The development and use of appropriate technology devices is appropriate only within the context of local application. Therefore, in this session, the Trainees plan extension techniques to use in a presentation/demonstration of solar agricultural dryers.

Suggested Resources

Katz, D., *Food: Where Nutrition, Politics, and Culture Meet*, p. 55.

Fugelsang, Andreas, *Applied Communication in Developing Countries*, Dag Hammerskjold Foundation, Sweden, 1973.

Pett, Dennis W., *Audio-Visual Communication Handbook*, World Neighbors, Oklahoma.

World Neighbors in Action Newsletter; Topic: *Communication, Vol. 10 #1E.*

Energy Theater Update, "New Western Energy Shows How", in *RAIN magazine*, Vol. IV, #5 (Feb-March 1978).

Weeks, Daniel and E. Sola, *The Photo Novel: A Tool for Development*, Program Training Journal Manual Series, ACTION/Peace Corps.

Attachment V-20-T : The Coming of the Rats

Procedure

1. (5 minutes) An overview of the session is presented, and the importance of good communication skills is stressed.

2. (40 minutes) The Trainer leads a discussion about appropriate communication and extension skills, including a review of the following:

- Oral tradition and story-telling (Attachment V-20-T and Fugelsang, pp. 29-32).

- Active demonstrations and workshops (see World Neighbors in Action).

- Dramatizations and puppet show (see *RAIN magazine*, pp. 16-18).

- The photo novel as a tool for communication (see Weeks).
- Visual techniques (Fugelsang, pp. 113-114).
- Use of the media to communicate information (Katz, p. 55).

During this time, copies of the relevant resource materials may be distributed or placed on a table for use during the following activity.

3. (1 hour 15 minutes) The objective (a demonstration of effective communication skills) is explained. Trainees should prepare (either in groups or alone) to communicate information about solar agricultural dryers to villagers role-played by others in the training community, utilizing the following guidelines for the presentation/demonstration (these guidelines should be posted or distributed):

a. It should take the form of an audio or visual demonstration, story-telling, dramatization, media message, or a combination of techniques.

b. It should utilize as many appropriate technology devices as possible (agricultural dryers, Lorena stoves, solar water heaters, pedal powered grinders, etc.).

c. It should be based on the introduction, application, and use of agricultural dryers within the social, cultural, economic, environmental, and health constraints of the target audience.

d. It should be clear, succinct, and entertaining. Each person is alloted 5 minutes presentation time. (Groups may use per person/time for presentations.)

e. It should stress implications for health improvement and active participation of women and children.

SESSION 21
Assessing Community Readiness for Women's Involvement in Development Projects

(Adapted from *WID: A Volunteer Training Resource Book*)

Time: 2 hours

Objective: Through role-play and discussion, the Trainee will accurately identify attitudes and beliefs that either promote or inhibit the inclusion of women in development efforts.

Overview: Although Trainees may be sensitive to the lack of equality between men and women in regard to traditional development efforts, they may not yet understand the crucial role of local community attitudes and beliefs in determining what part, if any, women will play in the process of change. In this session, a role-play stimulates an encounter between PCVs, community members, and leaders; and provides an opportunity to examine some local factors that hinder and/or support change or innovation. Through this experience, the Trainees begin to identify culturally sensitive ways in which to promote change within an existing community framework.

Suggested Resources

Conger, Lucy, "Role Analysis as a Tool for Women in Development Planners" in *WID: A Volunteer Training Resource Book.*

Attachment V-21-U : A Cross-Cultural Simulation

Materials Needed: Newsprint, markers, tape, chairs, and table.

Note: For this session, five people on the training staff (who are familiar with the role-play technique) should be selected to play the community members in the simulation.

Procedure

1. (10 minutes) The activities for the session are explained, and the objective and overview are presented.

2. (10 minutes) The Trainees are told that the object of the simulation is to sharpen observational skills in a structured way, and to gather information that may be useful during Peace Corps service. The Trainer explains that 5 people will play the roles of community members and co-workers: an agriculture extension agent; two farmers; a school teacher; a local merchant.

The Trainer asks for two volunteers from among the Trainees to play the PCV roles.

3. (10 minutes) A Co-trainer takes the two "PCVs" from the room so they will not hear any additional information being given to the "observers". The "PCVs" are given their role descriptions

and the situation (Attachment V-21-U) to study. If there are questions, the Co-trainer may answer them, but should not give additional information, beyond what is stated in the description or situation. The two "PCVs" may wish to discuss how they want the encounter to proceed, and what strategies they want to follow.

While the "PCVs" are being briefed, the other Trainer speaks with the "Observers". They are told to watch the role-play carefully and without interrupting; and note on paper any observations about the following: the subject, what was said, how it was said, and by whom.

Note: It may be helpful to write the observation guidelines on a piece of newsprint so they may be copied. The "Observers" read the simulation, and ask any questions they may have. The room should be set with a table and four chairs in the center, and observation chairs forming a circle around the inner group.

4. (2 minutes) The two "PCVs" come in and take seats around the table, or in the inner circle of chairs. They should continue their conversation about the upcoming meeting. (This helps to keep them in role and make them less aware of the observers.)

5. (3 minutes) The five "community members" come in, and should act as if they have just arrived at a meeting. Their names may be pinned to their shirt-backs to help the "Observers" identify them; however, the roles should become apparent during the simulation.

6. (30 minutes) The simulation takes place with no intervention or interruption from the Trainer or the observers.

7. (5 minutes) When the simulation seems over, the Trainer asks the participants in the inner group to respond briefly to their impressions of the experience.

8. (15 minutes) The Trainees form small groups and discuss what was just seen and heard, focusing on the attitudes and beliefs concerning women as expressed or implied by the five "community members".

Note: the two "PCVs" should participate in the groups, but not together.

9. (20 minutes) The large group reconvenes. The Trainer posts two sheets of newsprint; one has the heading "beliefs/attitudes supporting change"; the other says "beliefs/attitudes blocking change". The Trainer leads a discussion to fill in the components of the worksheet, using comments and observations from the Trainees. If there is other pertinent information (other than attitudes and beliefs) suggesting that change regarding women's participation in development will be supported or blocked in the community, it should also be listed. When the list seems complete, the

Trainer asks for suggestions as to which influences seem to be the strongest in supporting change, and for those barriers that seem weakest and might be used to influence change.

10. (15 minutes) The small groups re-form and discuss the factors that lead most strongly to change. A list is compiled of the factors that might serve as opportunities for change, and the reasons for their selection are discussed. Each group gives the list to the Trainer for later summarization and distribution and to serve as a checklist of "change indicators" that may be useful in Peace Corps service.

SESSION 22

Dryer Assessment and Modification, Part II: Data Analysis and Reporting

Time: 4 hours

Interim Objective: See *Session 16*

Overview: When the data collection is complete, the groups prepare the final report on the dryer's food preservation capabilities, and discuss plans for demonstrating and explaining the dryer to others.

Procedure

1. (1 hour 30 minutes) Each group continues the data collection, making any necessary modifications in the device to improve its operation. With the Trainer's assistance, a trouble-shooting list is developed to identify the source of various operational problems, and to suggest possible solutions. The list should include viable rememdies for the following:

   - mold on food
   - dust settling on food
   - insects or other pests in the dryer
   - prolonged drying time
   - food freezing at night
   - food getting wet when it rains
   - rotting of food
   - food scorching

2. (2 hours) Each group prepares a report, in writing, that assesses the dryer. The report should include:

   - a drawing of the finished unit
   - data concerning the food before and after drying (e.g., weight, color, taste - if applicable)
   - climatic data during the assessment period
   - a graph which shows the rate of drying (i.e. weight reduction versus time)
   - perceived success or failure and reasons
   - a comparison of open sun drying with use of the dryer
   - the improvements or modifications which were made, or should be made in the next model
   - ways in which the device can improve nutrition/health status
   - potential impact of the dryer on sex-defined and traditional roles
   - recommendations for introducing the device to a village (e.g., its appropriateness or insuitability)
   - the envisioned use of such devices in each group member's country of assignment.

This report should be concise and succinct, and be the result of equal participation by all group members. It is due before the demonstration of the device (*Session 24*).

Previous Page Blank

3. (30 minutes) The groups share information concerning the reports, results or operational difficulties of the devices in preparation for the demonstration and explanation of solar dryers to occur in *Session 24*.

SESSION 23
Issues in the Development and Diffusion of Appropriate Technology: Part II

Time: 2 hours

Objective: See *Session 4*

Overview: The Trainees continue to examine the issues surrounding appropriate technology policy development, both at the local and international levels. Various approaches are analyzed (including the promotion of indigenous technological traditions and the utilization of overseas development workers), in order to gain perspective on appropriate means of facilitating technological innovation.

Suggested Resources

Jequier, Nicholas, *Appropriate Technology: Problems and Promises*, Chapters Two and Six.

Henry, David, "Designing for Development: What is Appropriate Technology for Rural Water and Sanitation?" in *Water Supply and Management*, Vol. 2, pp. 365-372, 1978. (Handout)

Scott, Michael, "Self-Help in Rural Mexico: Santa Maria's Well", in *Community Development Journal*, Vol. 12, No. 12, 1977.

Singer, Hans, *Technologies for Basic Needs*, International Labor Office, 1977; pp. 51-55.

Kassapu, Samuel, "The Impact of Alien Technology" in *CERES*, January-February, 1979 and "Technology That Won't Take Root", in *CERES* March-April, 1979. (Handouts)

Congdon, R.J., *Introduction to Appropriate Technology*, Emmaus, PA: Rodale Press, 1977; pp. 178-194.

Warpeha, Paul, *Perceptions of Technology: A Study of the Iluman Project*

Suggested Materials: Chalkboard and chalk, or newsprint and markers.

Note: The articles by Kassapu should be read prior to this session.

Procedure

1. (20 minutes) The Trainer presents a brief review of *Session 4*, then leads a discussion on centralized research and development (r and d) efforts, including their potentially disruptive effects on local culture and environment. Questions for consideration are:

Who stands to benefit from centralized research efforts?

Were technological capabilities in the U.S. developed by centralized r and d?

What basic assumptions support the transfer of "western" r and d methodology?

Will such assumptions likely prove true or false?

Is it realistic to believe that poor, non-literate people can conduct worthwhile technological research and development?

2. (10 minutes) The Handout, "Self-help in Rural Mexico: Santa Maria's Well" is distributed and read.

3. (15 minutes) The Trainees are encouraged to state reasons for the success of the water project. Comments should be noted by the Trainer on newsprint, and utilized to stimulate discussion. At the close of the discussion, the following two points may serve to summarize:

There is much importance in the human, non-technical aspects of appropriate technology (sometimes referred to as "software"), i.e., the organizational abilities of local people to implement their own solutions to local problems.

Informally educated and non-literate people are very capable of being innovative, inventive, and self-reliant.

4. (20 minutes) The article, "Development: What is Appropriate for Rural Water and Sanitation?" is distributed and read.

5. (5 minutes) The Trainer reviews organizations that represent potential work relationships and situations for appropriate technology/renewable energy Volunteers:

- agricultural cooperatives
- local schools and technical colleges
- health clinics
- sanitation departments (municipal government offices)
- community groups (mothers' clubs, 4-H groups)
- ministries of energy, natural resources or agrarian reform
- appropriate technology centers

6. (20 minutes) The Trainees form groups of 3-4. Each group selects an organization, and hypothesizes the role of an appropriate technology extensionist within that work situation. The discussion should center on:

-ways of facilitating community technological development
-methods of supporting indigenous research and development
-difficulties that might be encountered in dealing with policies or personnel.

7. (20 minutes) A reporter from each group presents a summary of the thoughts and observations made about the potential role of an appropriate technology/renewable energy volunteer.

8. (10 minutes) The Trainer summarizes the session. It should be pointed out that there is a need to integrate many approaches in order to formulate effective appropriate technology policies and programs. Local and decentralized endeavors should be encouraged, and recognized as valid by national governments. Appropriate technology policies should include community outreach efforts, including schools and community organizations in order to facilitate self-reliance and address the basic needs of local people.

SESSION 24

Demonstration and Evaluation of Solar Agricultural Dryers

Time: 4 hours

Objective: See *Session 20*

Overview: Communication and extension skills are practiced during informative presentations of solar agricultural dryers. Assessment checklists, devised by the Trainees, are used to evaluate the effectiveness of the demonstrations.

Suggested Resources: See *Session 20*

Materials Needed: As needed for the presentations.

Procedure

1. (1 hour) The Trainees finalize the agricultural dryer reports (i.e., record final data and observations) and finish the preparations for their demonstrations.

2. (30 minutes) The Trainees, either individually, or in groups, develop an assessment checklist to evaluate the demonstrations. The checklist should be based on the content guidelines presented in *Session 20*, and should assess the overall quality of communication.

3. (2 hours) The demonstrations are presented; and after each presentation the non-participating Trainees evaluate the performance based on the checklist previously developed. The Trainer also evaluates the demonstration, using the guidelines stated in *Session 20* as criteria.

4. (30 minutes) The session ends with a general discussion about the activities, suggestions for improvement, and a general site clean-up.

Previous Page Blank

PHASE V: ATTACHMENTS

V-1-A	:	The Potential of Solar Agricultural Dryers in Developing Areas
V-3-B	:	Guidelines for Planning A Garden
V-4-C	:	The World's First Solar Villagers Are Waiting to See
V-4-D	:	The Bewak Water Problem
V-5-E	:	South Facing Glass
V-5-F	:	Combined System
V-5-G	:	Overhead Utilization
V-5-H	:	Total Environmental/Solar Orientation
V-5-I	:	Air Collector System
V-5-J	:	Warm Air Distribution from Rock Storage
V-5-K	:	Solar Heat Gain and Heat Loss
V-6-L	:	Guidelines for Solar Chimney Experiment
V-6-M	:	Data Collection Sheet
V-7-N	:	Vent Sizing Worksheet A and B
V-10-P	:	Case Study and Questions for Discussion
V-13-Q	:	Design with Climate Worksheet
V-18-R	:	The Factors Influencing the Price of Food
V-18-S	:	Planning a Low-Budget, Nutritious, and Culturally-Appropriate Diet
V-20-T	:	The Coming of the Rats
V-21-U	:	A Cross-Cultural Simulation

Task Analysis : Build a Solar Agricultural Box Dryer
Task Analysis : Build a Solar Agricultural Dryer with a Flat Plate Collector

Previous Page Blank

PRESENTED TO THE UNIDO CONFERENCE
Vienna, Austria
14-18 February 1977

THE POTENTIAL OF SOLAR AGRICULTURAL DRYERS IN DEVELOPING AREAS.

by

T. A. LAWAND.

BRACE RESEARCH INSTITUTE.
Macdonald College of McGill University
Ste. Anne de Bellevue, H0A 1C0
QUEBEC. CANADA.

INTRODUCTION

One of the oldest uses of solar energy since the dawn of civilisation has been the drying and preservation of agricultural surpluses. The methods used are simple and often crude, but reasonably effective. Basically crops are spread on the ground or platforms often with no pre-treatment and are turned regularly until sufficiently dried so that they can be stored for later consumption. Generally little capital is required on the expenditure of equipment but the process is labour intensive.

There is probably no accurate estimate of the vast amounts of material dried using these traditional techniques. Suffice it to say it is a widespread technology practiced in almost every country of the globe and at nearly every latitude. Diverse products such as fruit, vegetables, cereals and grains, skins, hides, meat and fish and tobacco are dried using these simple techniques.

These technologies have originated in many of the developing countries so there is no major social problem in their acceptance, or in the use by the local populations of dehydrated foods for consumption. There are several technical problems however with the process; they are :

a) Intermittent, affected by cloudiness and rain
b) Subject to insect infestation
c) Affected by high levels of dust and atmospheric pollution.
d) Affected by the intrusion from animals and man.

In the more advanced segment of the society whether in developing areas or in industrialized regions, artificial drying has in many cases surplanted traditional sun drying in order to achieve better quality control, reduce spoilage and in general cut down on the losses and inefficiencies engendered by the above difficulties.

Previous Page Blank

The relatively high cost of labour in most industrialized areas and the hitherto, until recently, inexpensive costs of fossil fuels permitted the development of the artificial, generally large scale, drying processes to be evolved. The cost of dehydration was added to the cost of selling the process materials. The advent of higher charges for fossil fuels as well as the danger of depletion and scarcity of these fuels has stimulated renewed interest in solar agricultural dryers.

It is estimated according to the FAO World Book that the amount of agricultural produce dehydrated in 1968 using solar energy amounted to 225 million tons. In that year alone Australia exported over 72 thousand tons of sun dried foods worth over 27 million dollars. If all this drying, or even part of it, were to be done using fossil fuels, it would put an even greater strain on our already limited reserves. Over the past three decades, increasing interest has been paid to the development of solar agricultural dryers which make use of known principles of heliotechnology in order to combat some of the principal disadvantages of classical sun drying.

In evaluating technologies which might be amenable to applications in developing areas, one should distinguish between small and large scale operations. In general, small scale systems would be used in those areas where land holdings are not large with the result that individual farmers, fishermen and herdsmen, only produce modest amounts of surplus products. The objective is to dehydrate these surpluses for use often only by the family of the producer or for sale in the local market in the immediate vicinity. At times, small scale surpluses of certain products such as peanuts or rice are delivered to central facilities for processing, dehydration and eventual marketing (as is indicated in the attached photos.) These systems are generally well established and require a fair degree of organization in the industry. In many instances these amalgamated handling facilities do not exist Therefore in providing an overview of some of the technologies, one must differentiate between the existance of commercial and physical infrastructures within a given locality. A series of descriptions have been attached which describe both some of the small and large scale systems for use in developing areas.

Larger scale systems invariably require the use of an external power source. Where conventional electric power supplies are available, reliable and not excessive in cost, it is logical to utilize these external sources for the operation of fans and blowers, vents and duct baffles in order to increase the efficiency and operating performance of a solar agricultural system. Some driers are of the portable, powered type wherein solar air heater collectors are fitted with electrically powered fans (this could be done using gasoline or diesel engines as well) and are taken directly to the areas of production for in-situ drying. Traditionally this process was used with fossil fuel often butane or propane gas as the energy source. As the price of these systems increases, there has been a tendancy to develop systems of this nature relying on solar energy to provide the bulk of the energy required for dehydration. In fact, in some instances fossil fuels are used to supplement these solar collectors in order to maintain optimum operating conditions in a system partially operated by solar energy.

The other major category applicable for dehydration in the industrialized sectors of developed and developing nations, is to use the roof area of existing buildings as the solar collector, fitting the buildings with suitable blowers, ducts, collectors and often storage mechanisms. In the United States of America a number of activities along these lines have been developed and interest has been generated in some of the prestigous industrial and academic institutions in the country. An example of this is the project funded by the United States Government where solar energy is used as a substitute in dehydration for natural gas. This project is being undertaken by California Polytechnic University and TRW Systems. They indicate that the State of California alone produces annually over 450 million dollars in dried fruit and vegetables. Their system will no doubt become increasingly cost effective as the cost of fossil fuels and the electricity generated by it continue to escalate. (Ref. Solar EM:* 1976, October.) Another system receiving increasing interest in this field both in developed and the developing regions is the use of greenhouses to dehydrate surplus produce. This combined effect of drying and greenhouse operations has much validity and has to be examined for each particular set of circumstances. A number of studies have been undertaken in this regard for specialized crops. Finally an older but certainly no less valid system has been the use of heat extracted from the underside of roofs. This has proven quite satisfactory in providing some dehydration potential in a number of applications. This is one of the oldest applications in solar agriculture drying.

TECHNICAL CHARACTERISTICS OF SOLAR AGRICULTURAL DRYERS.

There are two principal aspects of this process:

a) The solar heating of the working fluid (generally air).
b) The drying chamber wherein the heated air extracts moisture from the material to be dried.

The solar heating aspect can in turn be subdivided into two categories:

1) Separate solar air heater collectors using natural or forced convection to preheat the ambient air, and reduce its relative humidity.
2) Direct, in situ heating of air which in turn directly dehydrates the produce.

The sun drying principles have been well described by Löf and others in earlier literature and in some instances are less well understood, than commercial dehydration.

A discussion of drying theory is beyond the scope of this paper, but a few principles may be advantageously outlined here. These are particularly those applicable to direct radiation drying, inasmuch as the principles involved in the drying of materials in various types of opaque enclosures by means of hot air, whether from a solar heater or some other type of heating unit, are well outlined in the drying literature. The first requirement is a transfer of heat to the surface of the moist material by conduction from heated surfaces in contact with the material, or by conduction

* Solar Energy Magazine

and convection from adjacent air at temperatures substantially above that of the material being dried, or by radiation from surrounding hot surfaces or from the sun. Absorption of heat by the material supplies the energy necessary for vaporization of water from it, 590 calories per gram water evaporated. Water starts to vaporize from the surface of the moist material when the absorbed energy has increased the temperature enough for the water vapor pressure to exceed the partial pressure in the surrounding air. Steady state is achieved when the heat required for vaporization becomes equal to the rate of heat absorption from the surroundings.

To replenish the moisture removed from the surface, diffusion of water from the center to the surface of the drying material must take place. This may be a rapid or a slow process depending upon the nature of the material being dried and upon its moisture content at any time. It may thus be the limiting rate in the drying operation, or if moisture diffusion is rapid, the rate of heat absorption on the surface or the rate of vaporization may be the controlling factor. In some very porous materials, vaporization may take place even below the apparent surface of the material, vapor then diffusing through pores in the solid.

In the case of direct radiation drying, part of the radiation may penetrate the material and be absorbed within the solid itself. Under such conditions heat is generated inside the material as well as at the surface, and thermal transfer in the solid is facilitated.

For economic reasons, maximum drying rates are usually desired. Product quality must be considered, however, and excessive temperatures must be avoided in many materials. In addition, because drying occurs at the surface, those materials which have a tendency to form hard, dry surfaces relatively impervious to liquid and vapor transfer must be dried at a rate sufficiently low to avoid this crust formation. Close control of heat transfer and vaporization rates, either by limiting the heat supply or by control of the humidity of the surrounding air, must be provided.

The drying of a product simply by permitting relatively dry air to circulate around it, without the use of any direct or indirect heat source, is known as adiabatic drying. The heat required for vaporizing the moisture is supplied by the air to the solid material, thereby reducing the air temperature while increasing its absolute and relative humidity.. Because of the low heat capacity of air, in comparison with the high latent heat of vaporization of water, large volumes of air at reasonably low relative humidity must be used in this type of drying process. Air leaving the drier is nearly saturated with water at the wet bulb temperature. The air supply, at its initial dry-bulb temperature and humidity is thus cooled and humidified toward its wet-bulb temperature, while the moist solids in contact with this air approach the wet-bulb temperature also.

The foregoing generalization must be somewhat modified if the materials being dried are at all soluble in the water present. Fruits and other agricultural products contain salts and sugars which cause a lowering of the vapour pressure. The surface temperatures of these materials must therefore

be higher than the wet-bulb temperature of the air in order for vaporization to take place. This means that the adiabatic drying of these solids requires air at lower relative humidities than do the materials having no solutes in the aqueous phase.

An important property of materials processed by direct radiation drying is their absorptivity for radiation. Fortunately, most solids have relatively high absorptivities, but they may change as drying proceeds, the surfaces of the materials becoming less or sometimes more "black" during the process. Also, there may be changes in opacity of the surface of the materials which are partially transparent to some of the wave lengths in the spectrum of the radiant source.

The thermal conductivity of the material is also an important property, particularly if the solids are dried in a layer of sufficient depth to require conduction of heat from particle to particle. If the thermal conductivity is poor, circulation of heated air through and between the particles of moist solid would permit better heat transfer than direct radiation on the surface of a relatively deep bed of particles.

In larger scaled dehydration systems, forced convection, generally powered with an external, non-renewable power source increases the diffusion transfer of moisture and, if properly applied, increases the rate of dehydration and the quality of the produce. These systems are well documented in the literature.

GUIDELINES FOR PLANNING A GARDEN

For this exercise, you will plan a garden that fulfills the following criteria:

It is $10m^2$, south-facing, and protected from animals.

The food is organically grown -- no chemical fertilizers, pesticides, or herbicides.

The food grown provides for a variety of nutritional requirements, and includes foods rich in at least three of the following areas: carbohydrates, protein, vitamins, minerals.

It is for your own use, with enough quantity and variety to use the garden as a demonstration for a school, health center, community group, or neighbors.

It is appropriate for use in the country and (if known) specific region of your Peace Corps assignment.

During the planning, your are encouraged to use as many resources as possible, including:

- resource books made available by the training staff
- local gardeners, at or near the training site
- other Trainees who have had experience in gardening

Your final plan should include:

A drawing of the garden plot, showing the location of beds, methods of irrigation, devices or plans for keeping birds and animals away, methods of biolocial pest controls.

An explanation of the types of crops planted, and the reasons for including them.

A description of methods used (soil preparation, planting, maintenance, modifications for the specific country, seed sources, soil improvement).

Please answer the following questions in your report:

1. How can some of the foods be preserved and stored to retain freshness and nutrients?
2. How might a garden enhance your role as an appropriate technology extensionist.
3. What advantages and problems can you see concerning the introduction of family gardens during your service as a PCV?

By Winfred Blevins

The world's first solar villagers are waiting to see

Photovoltaic system at a tiny Papago Reservation town works—but cost is high; also, it doesn't operate TV sets

At Schuchuli, Arizona, a banana-colored Frisbee, shining in the early light, cuts the air in front of the tiny white church. Four dark men of assorted ages and under assorted hats (baseball to cowboy) sit on a low wall in the village dance ground, enjoying a cool drink. A woman crosses behind them, hauling laundry to the domestic services building, later to be hung in the stronger light and the desert breeze. A dog yaps at the gliding Frisbee. A boy about 12 prepares for another toss, then holds it, suddenly wary at a strange car—new, expensive, big, with two Anglos inside—stops in the center of the village.

The first impression of Schuchuli, a small settlement on the Papago Reservation in southern Arizona, is of the power of the sunlight. Even at 9 o'clock it seems dazzling. By afternoon the heat it brings will be oppressive.

Now the village looks empty. The playing children, the lounging men are gone. Even the dogs have slunk off somewhere, maybe into the shade behind the adobe brick houses or under the ramadas. The only movement is among the aluminum cans (huge bins of them saved for recycling) winking back at the sun. It isn't difficult to guess that the arrival of Anglos has sent folks scurrying indoors, as surely as the midday heat will.

The old Navajo joke comes to mind: a typical family consists of two parents, four children, two grandparents, and one anthropologist. Or one Bureau of Indian Affairs official, or one reporter, or one photographer, as occasion warrants. Southwestern Indians are among the world's most gawked-at creatures, almost

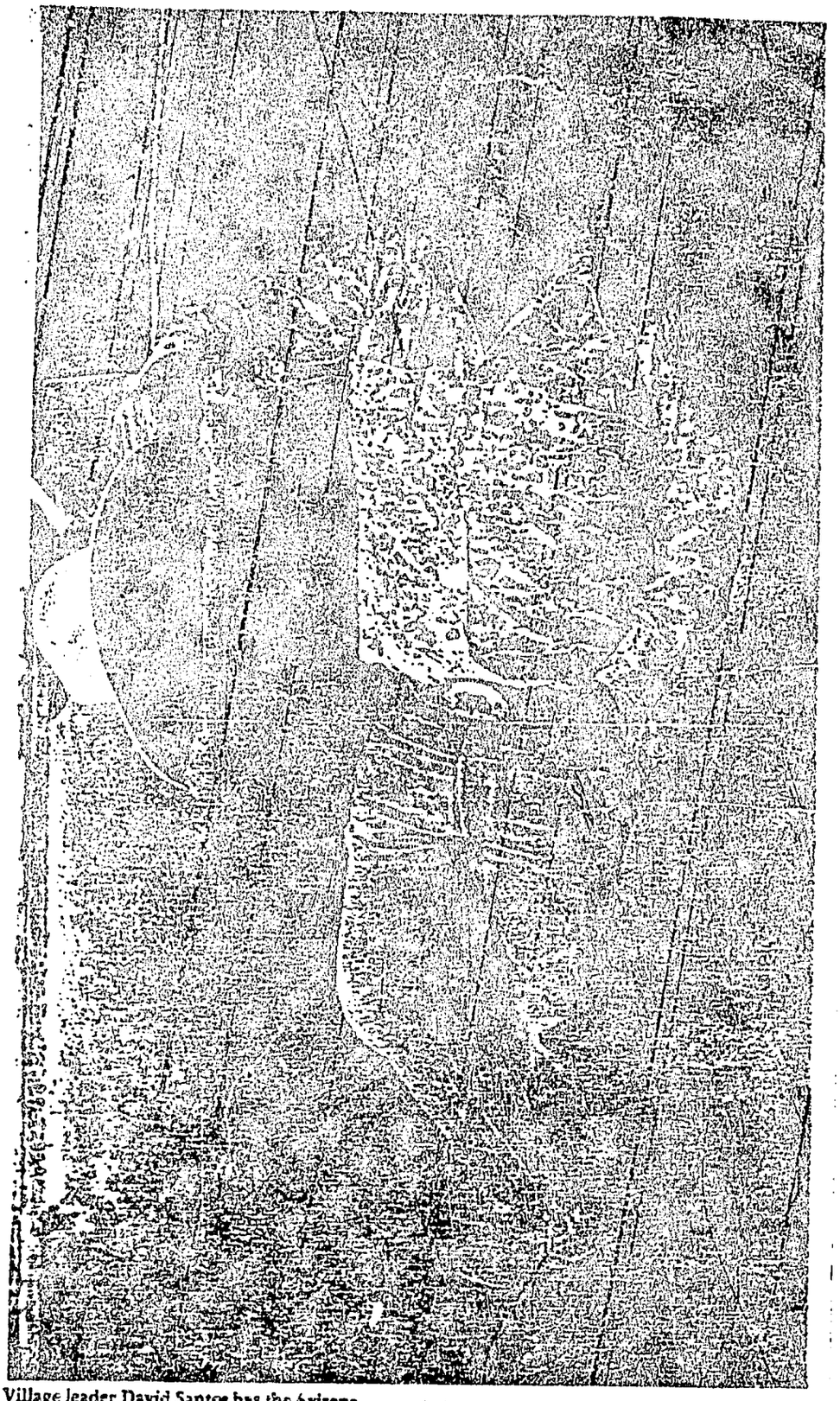

Village leader David Santos has the Arizona sun on his side—perhaps the future, too.

Photographs by Ted Streshinsky

PERSONALIZED LIGHTER COVERS!

If you love your Bic but hate that plastic look, here's your answer! Snap-fit jeweler's jackets in 2 shiny dark texture tones. Elegant, and no more mix-ups in a crowd, with your initials engraved on a smooth oval. American-made, plated solid brass, set of 2—gold-finish and silvery. For Bic ovals (not included). PRINT initials. 1443 Lighter Covers. 1 Set $4.98

LILLIAN VERNON®

Dept. TRS, 510 S. Fulton, Mt. Vernon, NY 10550

Please send me ____ sets #1443 Lighter Covers at $4.98 ea. set. Add 60¢ post. & hdlg. NY-CT res. add tax. PRINT initials _____

Name _____ Total _____

Address _____ Apt. _____

City _____

State _____ Zip _____

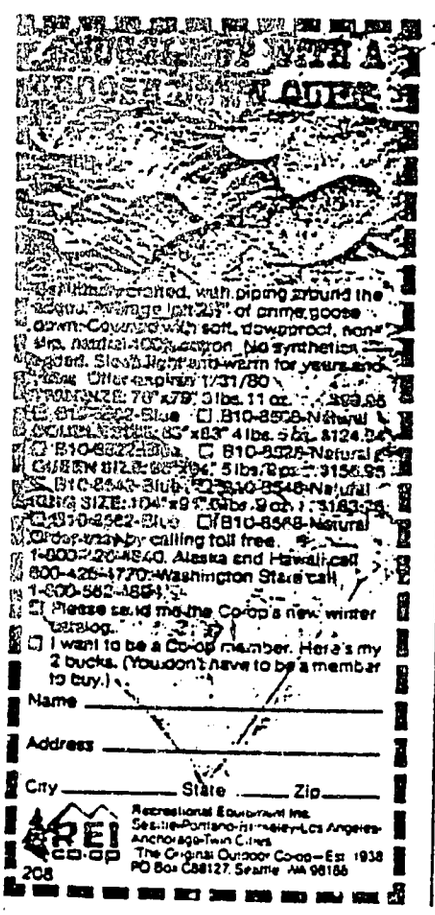

Handcrafted, with piping around the edges. Average loft 2½" of prime goose down. Covered with soft, downproof, non-allergenic, 100% cotton. No synthetics. Sleep light and warm for years and years. Offer expires 1/31/80.

PRICE SIZE: 70" x 79" 3 lbs. 11 oz. $99.95

☐ 810-8502-Blue ☐ 810-8508-Natural

COURTESY SIZE: 63" x 83" 4 lbs. 5 oz. $124.95

☐ 810-8522-Blue ☐ 810-8528-Natural

QUEEN SIZE: 86" x 94" 5 lbs. 8 oz. $156.95

☐ 810-8542-Blue ☐ 810-8548-Natural

KING SIZE: 104" x 94" 6 lbs. 9 oz. $183.95

☐ 810-8562-Blue ☐ 810-8568-Natural

Order now by calling toll free. 1-800-720-4840. Alaska and Hawaii call 800-426-4770. Washington State call 1-800-562-4894.

☐ Please send me the Co-op's new winter catalog.

☐ I want to be a Co-op member. Here's my 2 bucks. (You don't have to be a member to buy.)

Name _____

Address _____

City _____ State _____ Zip _____

REI co-op

Recreational Equipment Inc.
Seattle-Portland-Berkeley-Los Angeles-Anchorage-Twin Cities
The Original Outdoor Co-op—Est. 1938
PO Box C88127, Seattle WA 98188

208

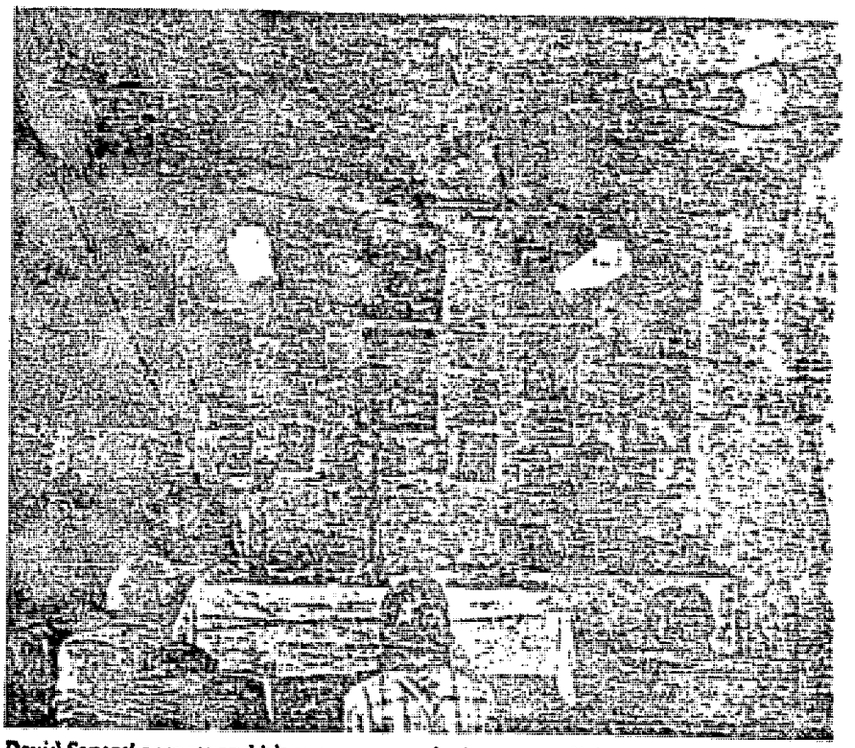

David Santos' parents and his son Calvin sit in tiny church illuminated by fluorescent lights, powered by the experimental solar-energy system.

competing with the denizens of nest. Being human, they don't appreciate it.

This Papago village has had more than its share of visitors since December, when it became the first village to get its power primarily from one of the most abundant natural resources—sunlight. The United States government installed an experimental photovoltaic system of power here (SMITHSONIAN, October 1977). Since then, people from Washington, D.C., New York, the Soviet Union and Switzerland—even Japanese—have come to see if the sun can really operate the lights, a water pump, the refrigerators, the washing machine and the sewing machine. We have come for the same reason, and perhaps to ask ourselves whether the Great White Father once more is doing what papa knows is best for the "poor" Indian.

Even the most benevolent of white intentions has a way of going cockeyed between wish and fulfillment. Early missionaries wanted the Plains Indians to cover their nakedness. But when the braves got hold of pants, they cut them off just below the crotch, threw the tops away, and then they wore the bottoms for leggings.

Waiting for David Santos, this area's elected representative to the tribal government, we stare at the network of poles and wires leading from the solar array to the village's two dozen buildings. The Sonoran desert all around sprouts rocky, clumpy mountains, saguaro cacti and sticky-leaved creosote bushes.

Santos is a quiet, self-contained man of middle age, sporting a prosperous belly. He is reputed to be village leader in both name and fact. He reports to the Lewis Research Center of the National Aeronautics and Space Administration at Cleveland, Ohio, and he played a key role in the decision to bring in solar electricity. The anthropologists hired to study the impact of solar electricity on the village say that the people think of it as "Dave Santos' project." According to David Santos, most people living in Papago villages welcome electricity, although some older folks disapprove. Why? "Old-timers. They like to live the old ways."

Winfred Blevins, a novelist, specializes in 19th-century Indian subjects.

Santos records data from the system's monitoring equipment.

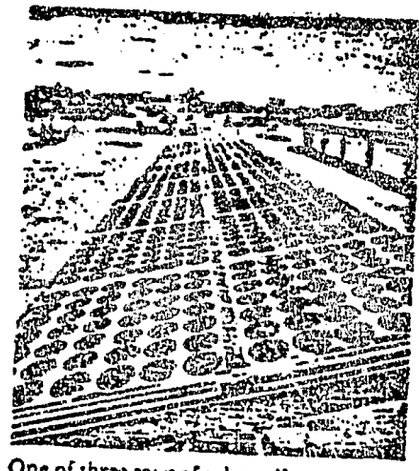

One of three rows of solar-cell panels that generate current.

Mrs. Molly Carmen takes her turn at water-saving wringer washer.

Santos leads us to the heart of the system, the solar panels. On a daily basis he reads the monitoring equipment and sends regular reports to the Lewis Center, thousands of figures that indicate the health and usefulness of the system. The solar panels, enclosed by a chain-link [illegible], are tilted toward the sun, the [illegible] adjusted seasonally. In the panels [illegible] the photovoltaic modules that convert the sun's rays into 120-volt direct current. Nearby, in a building that houses monitoring equipment, are 53 batteries that store power for times when the sun doesn't provide. Compared to other areas, those times are few—4,000 of the year's 8,760 hours are sunlit, enabling the batteries to store current for electric lights when they are most needed, at night.

Wires run to most of the 16 households (where they operate two 20-watt fluorescent lights per building), to the small, whitewashed Catholic church, to the water pump (a principal consumer), to the feast house and to the domestic services building. A m[illegible]est output from a modest system. But until last December Schuchuli had almost no electricity; a diesel engine ran the water pump, and three families had electric generators that powered television sets and a few light bulbs; the rest did without. Even the small cost of diesel fuel for the water pump was a strain on most villagers. A[illegible]e all fossil fuels, it was only going t[illegible]ore scarce and expensive.

[illegible] this experiment: the U.S. De[illegible]t of Energy wanted to encourage exploratory uses of solar power. The Lewis Center had developed a stand-alone solar electric system that would supply power to villages beyond the reach of power lines. Since Schuchuli at that time didn't offer a large enough market to justify the tribal utility or a power company in bringing power lines across more desert, here was a chance to see if the system worked, and—more important—if it was economic. So far the answers seem to be yes, it does work, and maybe, just maybe, it will be economic—in a few years, and with luck.

Santos, answering questions diffidently, confirms that the system functions admirably. In the remote place for which it is designed, the photovoltaic system above all must be reliable. Neither parts nor maintenance services will be easily available. Santos says maintenance is minimal. In spite of a brief shutdown caused by a minor problem with a meter relay, the solar electricity is more reliable than utility power—it has less outage time. That's the good news.

The bad news is the cost. The Lewis Center says that Schuchuli's small amount of electricity will cost $1.76 per kilowatt-hour over the anticipated 20-year life of the system. Engineers hope that a similar system installed in 1986 would cost as little as 47 cents per kwh. (The entire cost of the Schuchuli project was a third of a million dollars, but two-thirds of that was for nonrecurring and experiment-related work that need not be repeated elsewhere.)

Yet the two principal alternatives for bringing electricity to a rural area like Schuchuli—extension of power lines and diesel-generated electricity—also are relatively expensive. Lewis Research Center has estimated that the cost of bringing power lines to Schuchuli would be $1.55 to $1.91 per kwh; diesel-generated electricity would cost $1.79 per kwh. And these costs will rise with the cost of fuel.

If, in remote rural areas, the cost of solar electricity compares favorably with that of conventional sources, in urban areas it does not. Many utilities in the United States supply electricity to non-rural areas for less than a nickel per kwh.

So a paradox: solar electricity today makes sense primarily for the world's villages—some three million of them—beyond the reach of power lines. Mostly these villages have subsistence economies, and cannot now afford electricity from any source. Yet even a small amount of electric power conceivably could enable such a village to develop its economy.

Will someone step in and give villages solar electricity, which would contribute to the hoped-for market demand? Maybe; perhaps some governments will. (The government of Saudi Arabia is planning to supply solar electricity to one village. The government of India is interested in solar electricity to drive water pumps in some of its remote villages.) Right now, although photovoltaic electricity is expensive indeed, a significantly lowered price is predicated on major improvements in production and technology, im-

.rovements that many American energy experts feel are certainly on the way.

The people of Schuchuli, naturally, are more interested in what's happening at home than in its worldwide implications. Santos takes us to the domestic services building, where the 15 refrigerators, a washing machine and a sewing machine are installed. Do people like these appliances—do they use them?

Mostly yes, says Santos. (He doesn't seem to enjoy trading a lot of words.) The refrigerators are nice because people no longer have to spend so much money on ice for their ice chests. The washing machine is so popular that the waiting lines oblige the Santos family to drive their own laundry to the town of Ajo, 16 miles away. The sewing machine scarcely gets used. One of the reasons the women prefer to sew by hand—and women do all the sewing here—is that they can socialize with their families while patching pants. They don't like sitting alone in the domestic services building.

A young woman comes into the building with a baby and a load of washing. She's genuinely beautiful—a broad face with imperial features. Does she like the refrigerator, the washer? A shy smile, a shrug, but no words. Will she let us take her picture? A broad smile, and a shake of the head. Santos has politely declined to urge any villagers to answer our questions or to let us photograph them. Such things are intrusions and impertinences,

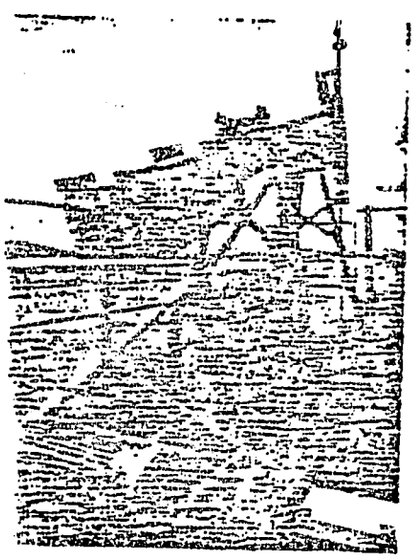

ater pump, which is now solar powered, gives 5,000 gallons every day.

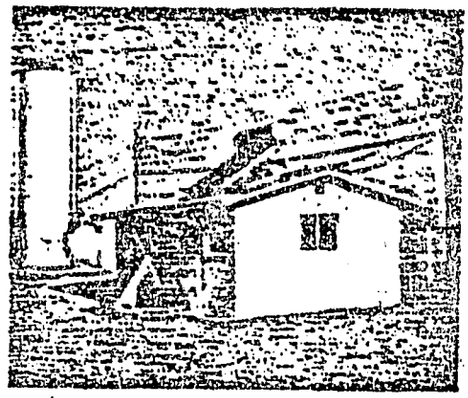

Washer, sewing machine and 15 refrigerators are in this building.

after all. As leader, he must suffer these minor indignities—but not everybody.

Another woman comes in and opens a refrigerator. She suppresses a giggle when we ask to see what she keeps inside, then opens the door wide. Almost empty. Santos opens his own box. Again almost empty. Yet six of the refrigerators aren't working, and families are doubled up in these tiny boxes. "The boxes are good to have," says Santos. "One woman who has diabetes keeps her insulin cold that way." Later we get a clue: one of Santos' daughters takes a bottle of Pepsi from a cloth-covered kitchen cupboard and drinks it warm. Well, the English like warm beer, don't they?

Two of the Anglos closest to the project—Donald Bahr and Billy Garrett, anthropologists from Arizona State University at Tempe—think that the village-wide reception is lukewarm, or at most low-key. "To date the community has experienced the project primarily as something brought to it," wrote Bahr and Garrett in their first report on the photovoltaic project's impact on the village. "The residents did not have to reach out for it nor . . . have they had to manage it through overt collective action. . . . When asked in March how they felt about the project, the most common answer was, 'all right.' "

To try to take some of the mystery out of the system (and to raise village consciousness and pride in this "first"), Bahr wrote an open letter to the people in August. It included a basic but colorful explanation of how solar power works.

"Energy to engineers is the same as what Papago medicine men call *gewkdag* for this reason," he wrote: "everything has some energy (gewkdag): it doesn't matter what the thing is, a ray of light, a rock, a cloud, a tank of gas, an electric wire, or a whisper.

"Energy, like gewkdag, can travel from one place to another; it can enter and leave things; it can be given or received.

"American science is very interested in the energy associated with light. It has been found that light produces electricity upon striking certain substances, and this is the basis of the Schuchuli electrical system . . . energy from sun rays enters into rows of small circles placed on flat, south-facing solar collectors. The circles, which are made of very pure crystals from an element found in common sand, are the important things.

"When solar energy strikes them, they give off tiny traveling particles called electrons. The electrons carry electrical energy through underground wires to batteries which are kept in a cement block house to the south of the collectors.

"From that point the . . . system . . . works like a car's. . . . The only difference is, instead of a car's motor charging the batteries, the sun charges them through the rows of small crystal circles."

Most village dissatisfaction with the solar project seems to center around two issues: the current doesn't do everything the villagers would like, and some worry that it may keep them from getting con-

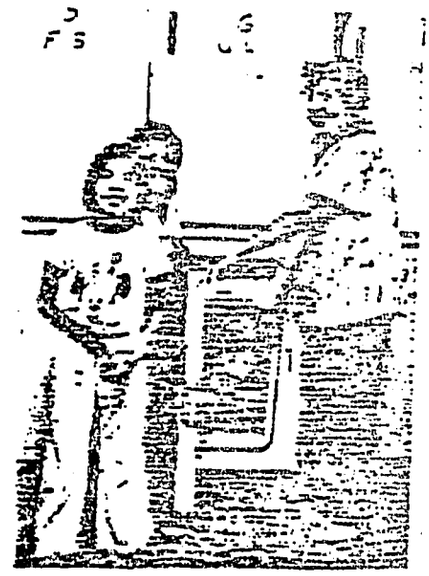

Each refrigerator has a key lock and villagers are glad to have them.

Best Available Document

Santos kids and others now can socialize, study at night, thanks to the lights.

tional power, with its abundance. ie system is small (total power was ted by funding) and puts out only direct current. So no television, no irons, no radios, and so on, and no power for the amplifiers for the people's fiestas. The television and fiestas are important to them—villagers mention them over and over. Fiestas are a central part of the life of Schuchuli, so a generator is used to help make all-night music.

Some of the villagers doubt that the Papago Tribal Utility Authority will ever bring in its poles and override the solar experiment. But the Lewis Center and the PTUA insist this isn't so—conventional power will be available when the tribe has enough money to bring it there, and then the solar experiment will be stopped.

How did the village end up with power that doesn't do much of what the people want? William J. Bifano, Schuchuli project manager at the Lewis Center, says the choices were made on the basis of a list of priorities submitted by the villagers themselves. But the list looks like someone's notion of what Anglos would like to see, not what the Papagos wanted. It starts electric lights "for the children to by" and ends with television.

h is always the danger. Indians ly tell whites what they think whites want to hear, mostly out of politeness, but sometimes because whites won't understand the truth. These Papagos have been editing reality for Anglos since the first priests taught them that Communion and confession please God; they started doing what pleased the Angle God, but quickly discovered they were also supposed to quit doing what pleased the gods they were familiar with. So they stopped telling the priests about their own ceremonies, and secretly kept on doing them.

Maybe it would be good for us Anglos to read a collection of Southwestern Indian jokes about what happens when a white man tries to help. Doubtless the book would be long, and probably funny.

As Santos sees us off, dark thunderclouds have risen in the north, brooding over the spiky ridges. A last question: Do the people still do their dances?

"Oh, yes, we had a deer dance just Saturday night. Everybody came. We have a deer hunt and dance and give a piece of deer meat to everyone."

"What is the deer dance for?"

For the first time, Santos flashes a sly, conspiratorial smile, surprisingly intimate. "Oh, it's a rain dance. We get so little here, and now is the season for it." The thunder puts an exclamation point on his sentence. Some of the old gods still speak loudly around here—the thunder and the sun, each in its appointed time.

Sun-powered Schuchuli (pop. under 100) is miles away from any utility.

Best Available Document

Attachment V-4-D

THE BEWAK WATER PROBLEM: Introduction

"Jayagiri" ("glorious Mountain") is the name of a learning materials and activities dev-lopmetn center operated by Indonesia's Directorate of Community Education in the hills above West Java's provincial capital. The Jayagiri staff are experimenting with ways of bringing villagers together in "learning groups" whose activities and projects are self-motivated, thuss addressing real needs. There are currently several learning groups in each of the villages around Jayagiri; each group chooses a leader who then undergoes training in leadership skills and group process. The best of the learning group leaders are designated "facilitators" for all the groups in their village, and develop close ties with Jayagiri staff while receiving additional training and a small honorarium.

Here is a case of Jayagiri's involvement with the learning groups of nearby Bewak. (text from World Education Reports/May 1979)

Several times lately, Idang, the village facilitator, and some of the learning group leaders from Bewak sub-village have mentioned that dirty water poses a serious problem in their neighborhood.

Bewak's sole source of water is a small ditch cut along the edge of the cliff on which the community is built. The water first runs by several small hamlets further uphill and is badly contaminated by the time it reaches Bewak. There is a small pond next to this channel, into which water is diverted before it runs through four spouts into a bricked washing and bathing structure. The villagers bathe, wash clothes, and draw their drinking and cooking water from this source. Several families run hoses from the channel at this point, as do several *tahu* (soybean curd) cottage industries. There is also a clay-and-bamboo pipe leading to the mosque, where the water is used for *wuduh*, to wash before praying.

Everyone in Bewak knows that the water is dirty. They want water that doesn't give an unpleasant taste, odor, and appearance to their food and tea. They are especially embarrassed to have to *wuduh* with murky water. But there seems to be no alternative: ground water is too deep; piping water past the villages where the ditchwater is polluted would be too expensive.

At Idang's request, our project staff began to search for a simple, inexpensive way to clean water. The answer seemed to be a rapid sand filter, designed and tested at the Development Technology Center. It can remove sediment and pollutants; water for drinking must still be boiled or treated chemically, but this is common practice and constitutes no special hardship.

In this filter design, water trickles through 25 to 40 centimeters of fine washed sand; particles of foreign matter are trapped in the top 10 to 20 centimeters. A filter with a surface of one square meter can clean about a third of a liter of water per second.

We did a little more research: In rural Indonesia, average water consumption is 60 to 80 liters per person per day. For cooking, drinking, and washing dishes only, the figure is 10 liters a day. If we excluded bathing and laundry needs, which would require a large and expensive installation, we estimated that about 7,200 liters a day would meet the basic needs of Bewak's 70 households, one mosque, and eight *tahu* factories.

Previous Page Blank

The Bewak Water Problem (2)

A filter made with an old oil drum can clean about 8250 liters every 24 hours—about 1,000 liters more than we needed. But nearly all of Bewak's water is consumed during two peak periods, early morning and late afternoon. We decided that a storage tank would be a good idea. This would collect filtered water during nonpeak hours to be drawn off when needed, meaning that a woman would not have to wait at the filter spigot for the two minutes required to fill a 10-liter bucket, while a line formed behind her.

Cost, we figured (not including the storage tank), would come to about Rp 20,000 (US$16) and assembly would be simple. Maintenance consists only of removing the dirty sand from the top of the filter and replacing it with clean sand, usually about once a month.

Our findings complete, we reported to Idang, who called a meeting of learning group leaders and three neighborhood officials. It soon became obvious that in our enthusiasm for designing the most appropriate solution, we neglected to consider the opinions of these village leaders, who had already watched the rise and fall of several government water filtration plans.

They asked technical questions about the filter until they were satisfied that they understood, then calmly explained why such a system wouldn't work in Bewak. Some families and *tahu* factories could not be counted on to conserve water, they said; others would consequently be denied their fair share. The participation of the villagers, vital to the successful operation of the oil drum filter design, would not be forthcoming. They spoke from experience: the task of maintenance would soon fall on their shoulders, and they had enough work to do already.

Perhaps if the filter were demonstrated and proven, they agreed, others might adopt it. Perhaps certain families could be convinced to try the filter on an individual basis? But who would be the first to try?

Idang closed the meeting. He would continue, he said, to try to drum up some enthusiasm for the plan. "Maybe someday we can get something going . . ." The idea then seemed to be forgotten.

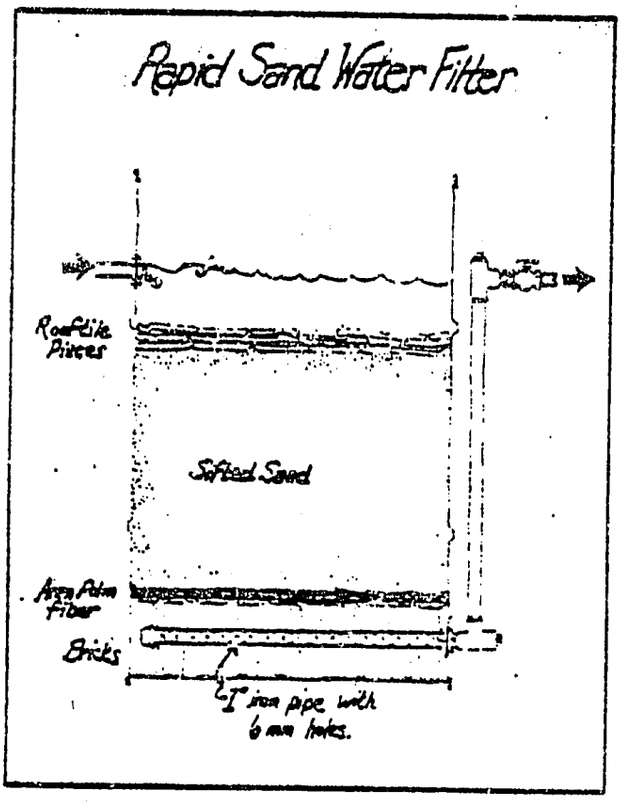

What were the failings of the Jayagiri Project staff's initial approach to Bewak's water problem?

The Bewak Water Problem (3)

About two months later, the village planning board decided to attack the water problem. They would dam up the channel, which would keep out some of the mud and contaminants, keep it from leaking, and give it a neater appearance. Some government funds were obtained; the balance was to be made up from community donations. The idea of the filter came up again, and Idang and some learning group leaders agreed to see that a demonstration model was constructed at the mosque, a spot where everyone could see and use it.

The Bewak learning groups pooled their meager resources and had enough cash to buy the pipe and fixtures. They hoped to raise the rest once work was underway. But their efforts to collect donations from community members, who had just been asked for their share of the channel construction costs, were unsuccessful. The new credit and saving cooperative in Bewak hopes some day to have capital for community projects, but hasn't reached that point yet. The learning groups wanted to buy guitar strings and football uniforms; they didn't want to invest any more in the unproven technology. Construction stalled, and enthusiasm began to fade again.

Why did the village planning board opt to build a dam in the channel instead of pursuing the idea of building waterfiltering apparatus?

What, in your opinion, should the Jayagiri staff do? What do you think actually did happen? Try to predict the outcome of this case.

The Bewak Water Problem (4)

Our staff weighed the situation and the alternatives. We know that we must be responsive to village needs without taking over or stealing initiative from the community. On the other hand, the learning groups with whom we were working so closely had initiated this effort in the hope that they could contribute to their community and had tailored the plan to the community's needs and situation. To fail now would be an embarrassing and discouraging setback for them. Feeling that they had made a significant commitment, and that further delay only added to the gloom that had begun to surround the flagging effort, we decided to supply the remaining capital. We asked that efforts to explain the terminology and its advantages to community members be speeded up, and that the rest of the work involve more villagers than before. Learning group members have worked hard to build the water filter; they believe that once the other villagers see how it works, they will support the project. We shall see.

From what we are given in this case study, does Jayagiri's capitalizing the water filter at the mosque seem to have been justified? Will the filter "catch on", will the villagers decide to build a community filtering/storage system? Will some of them decide to build filters for their own houses? What will be the eventual impacts on Bewak's water problem?

SOUTH-FACING GLASS WITH INSULATION AND THERMAL MASS

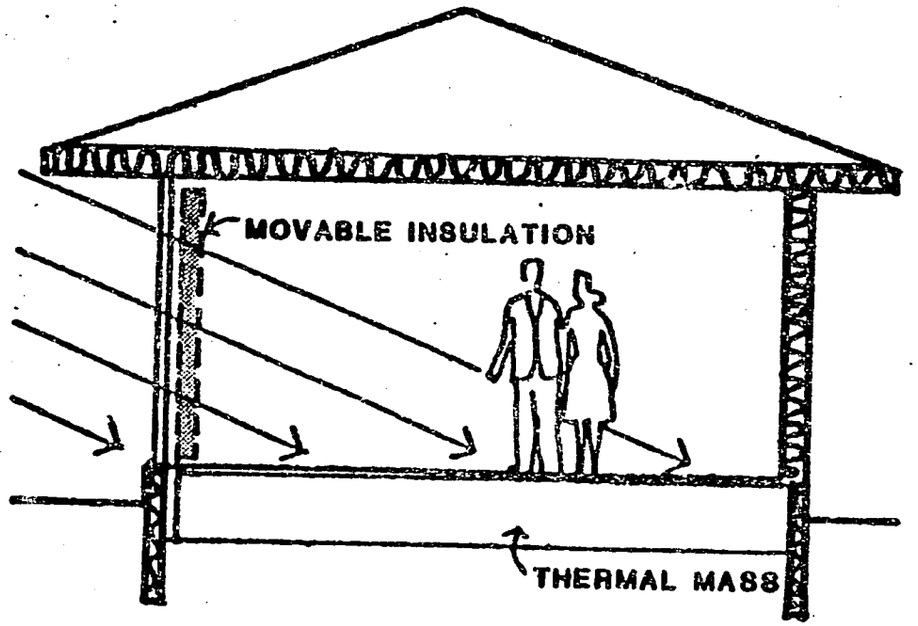

COMBINED WALL-COLLECTOR-STORAGE-DISTRIBUTION SYSTEM

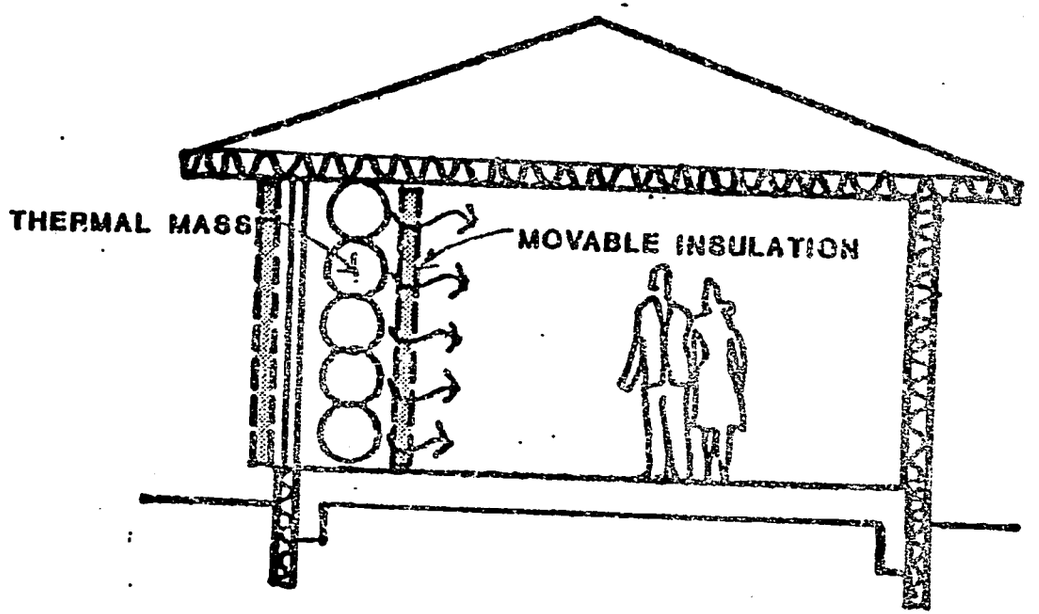

OVERHANG UTILIZATION

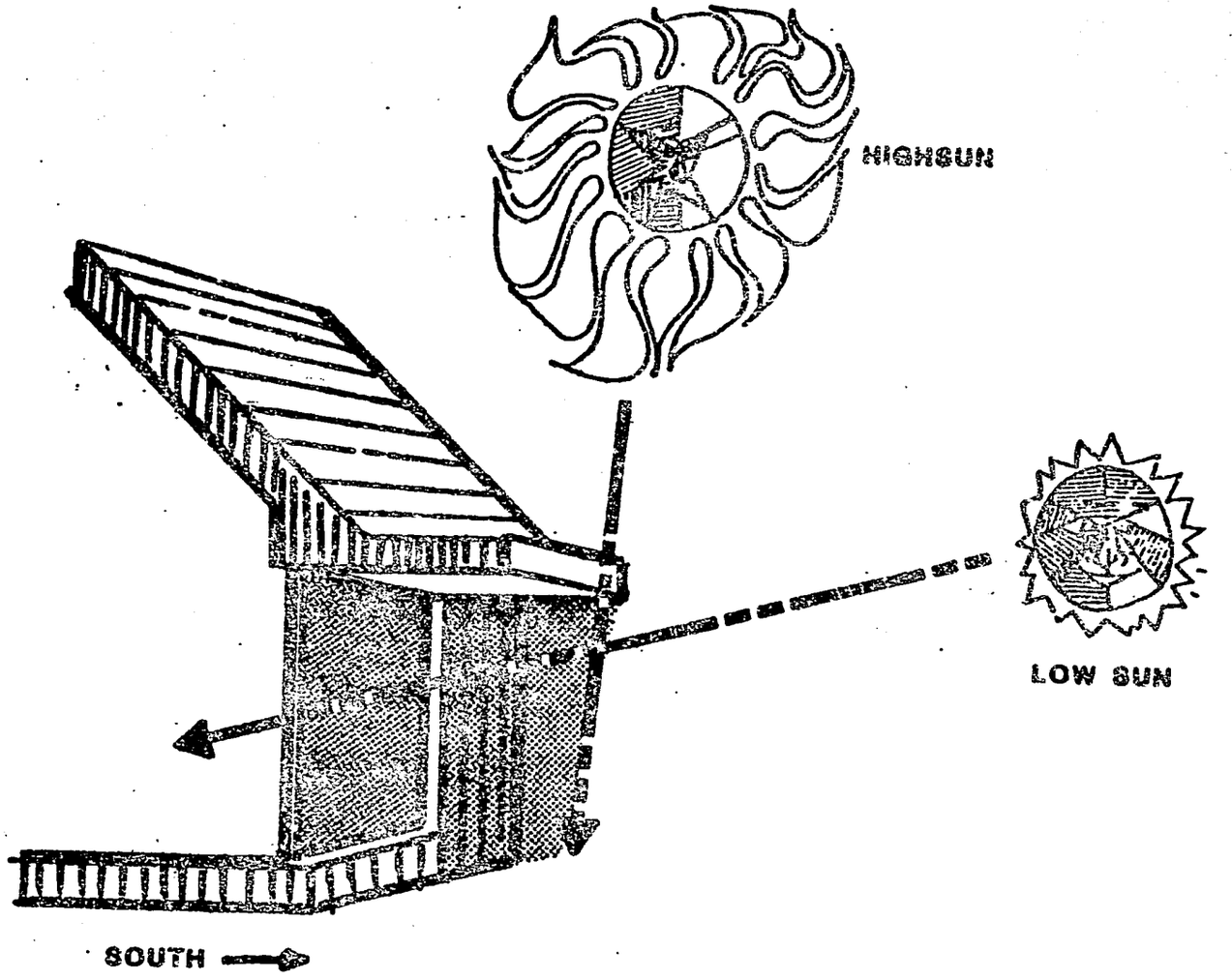

TOTAL ENVIRONMENTAL/SOLAR ORIENTATION

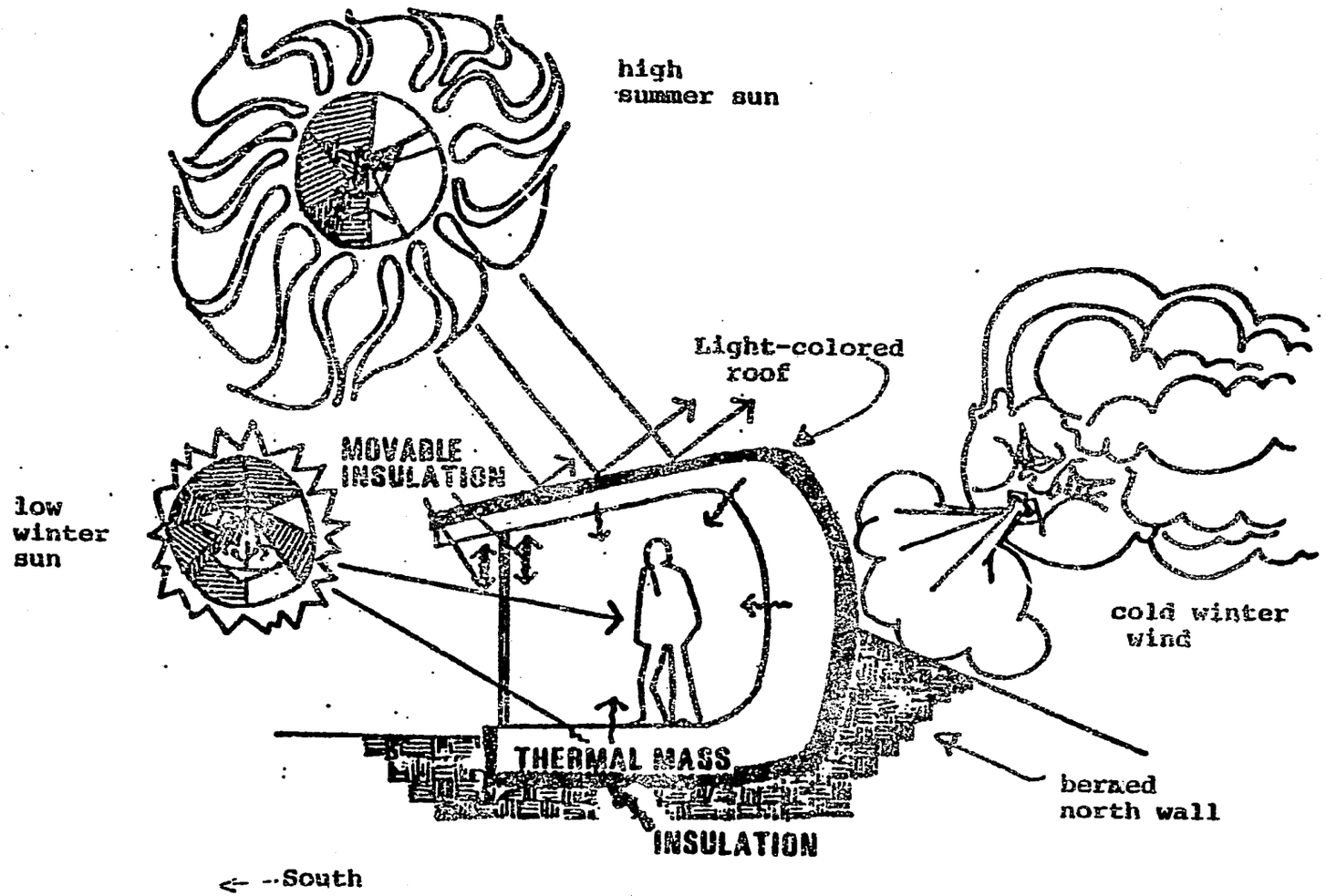

AIR COLLECTOR SYSTEM

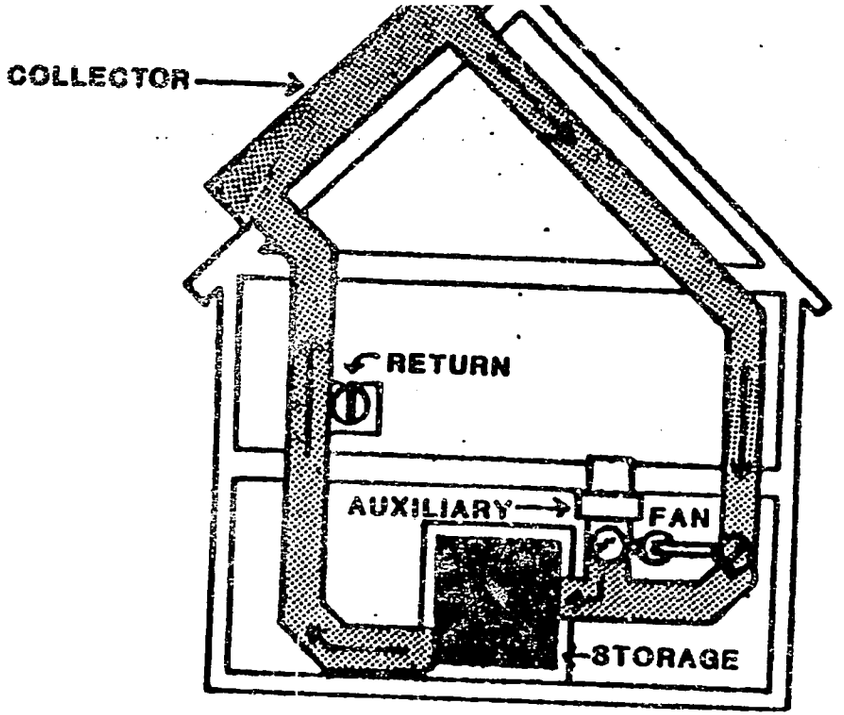

WARM AIR DISTRIBUTION FROM ROCK STORAGE

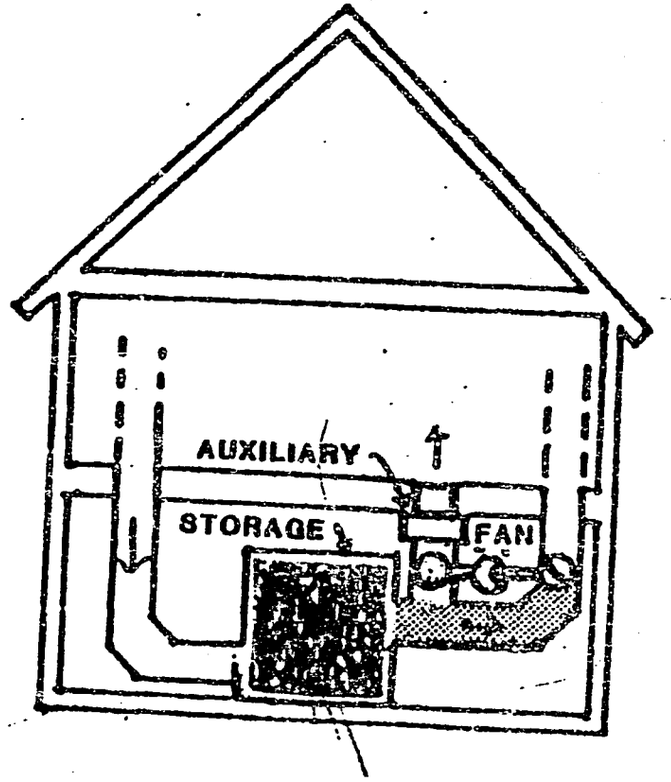

Calculating Solar Heat Gain and Heat Loss of a Building

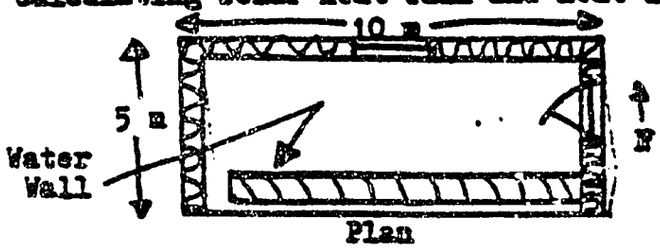

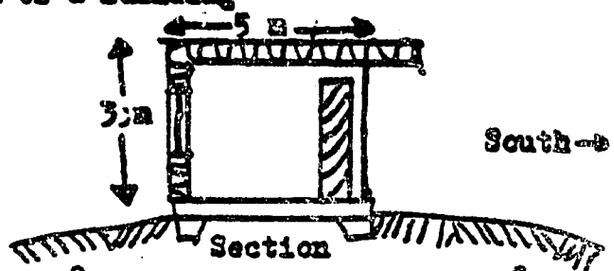

Heat Gain (Kgcal/day) = Insolation (Kgcal/m^2 day) x So. Glass Area (m^2)

= 2700 Kgcal/m^2 day x 30 m^2

= 81,000 Kgcal/ day

$$\text{Conductive Heat Loss (Kgcal/day)} = \frac{\text{Area } (m^2)\ \ \text{Time (hr/day)}\ \ \Delta T\ (^\circ C)}{\text{R value}\ \ (\text{hr } m^2\ ^\circ C/\text{Kgcal})}$$

	Area (m^2)	ΔT ($^\circ C$)	R (hr m^2 $^\circ C$/Kgcal)	Conductive Heat Loss (Kgcal/day)
South Glass	30	15	.2	54,000
Other Glass	1	10	.2	1,200
Door	2	10	.4	1,200
Walls	57	10	3	4,560
Roof	50	10	5	2,400
Perimeter slab	30m	10	.4	18,000
			Total	81,300 Kgcal/day

Convective Heat Loss (Kgcal/day) = Time (hr/day) x ΔT ($^\circ C$) x

(Air Changes/hr) x Volume (m^3) x Heat Cap'y of air (.29Kgcal/m^3 $^\circ C$)

= 24 hr/day x 10$^\circ C$ x 1 change/hr x 150 m^3 x .29 Kgcal/m^3 $^\circ C$

=10,440 Kgcal/day

$$\text{Storage Volume } (m^3) = \frac{\text{Solar Gain (Kgcal/day)}}{\text{Density } (Kg/m^3) \times \text{Heat Capacity } (Kgcal/Kg^\circ C) \times \Delta t\ (^\circ C/\text{day})}$$

$$= \frac{81{,}000 \text{ Kgcal/day}}{1{,}000\ Kg/m^3 \times 1\ Kgcal/Kg^\circ C \times 5^\circ C/\text{day}}$$

= 16.2 m^3 of water necessary to keep the Δt below 5$^\circ C$

Compare the Heat Gain (81,000 Kgcal/day) with the Total Heat Loss (81,300 + 10,440 = 91,740 Kgcal/day), and consider what could be done to reduce heat loss, such as perimeter insulation and moveable, night insulation on the south windows.

Weight of Material (Kg) = Volume of Material (m^3) x Density (Kg/m^3)

Heat Capacity of Water = 1 Kgcal/ Kg $^\circ C$

Given the following data of a solar tempered house, find the daily heat gain, conductive heat loss, convective heat loss, and solar storage ΔT.

Total Conductive Heat Loss:

Insolation = 2700 Kgcal/m^2 day

Solar Heat Gain = $\frac{\text{Kgcal}}{\text{day}}$

	Area (m^2)	ΔT (^oC)	R-value (m^2 hr ^oC/Kgcal)	Conductive Heat Loss (Kgcal/day)
Roof	150	10	5	
Walls	120	10	3	
South Window	25	15	0.2	
Other Windows	5	10	0.2	
Doors	6	10	0.4	
Slab Perimeter	50 m	10	0.4	

Air Changes per Hour : 2

Volume of House : 375 m^3

Convective Heat Loss = $\frac{\text{Kgcal}}{\text{day}}$

Storage Material : Water

Storage ΔT : 5^oC

Storage Density : 1000 Kg/m^3

Storage Heat Capacity: 1 Kgcal/^oC Kg

Storage Volume : m^3

Compare Solar Heat Gain with Total (Conductive plus Convective) Heat Loss

GUIDELINES FOR SOLAR CHIMNEY EXPERIMENTS

Constructed from one to four sections of black stovepipe, the solar chimney model illustrates the variables involved in the design of solar agricultural dryers: vent size, vertical height (measured between air vents), temperature, and convective air flow. When one or more connected sections of pipe are placed perpendicular to the sun's rays, an air flow is created as the cyclinder warms. The flow may be measured by releasing into the cylinder light, airborne matter, e.g., feathers, smoke, or dust particles, and timing the ascent with a watch, from the point of entry until the material emerges at the top. The volume of the cylinder, divided by the time elapsed, will indicate the estimated air flow.

Using a thermometer, the temperature is measured at the outlet, which is the hottest point. Two variables may be introduced to affect the air flow and temperature: the air vents may be left unobstructed, or made progressively smaller by taping or otherwise blocking the opening; or the cylinder may be tilted from horizontal (no flow) to vertical (maximum flow).

Through conducting such experiments, information is gained regarding the inter-relationships of various factors -- venting, height, temperature, and air flow. Examples of two experiments are:

Temperature and air flow are measured in one section of stovepipe placed in various positions (including vertical and horizontal).

Temperature and air flow are measured after one, or both, ends of the stovepipe are partially closed, while the cylinder is in various degrees of tilt.

Guidelines for Conducting the Experiments:

1. Record all observations.
2. Attempt to be as accurate as possible.
3. Keep the stovepipe in the sun to avoid any cooling between experiments.
4. Maintain the stovepipe's position (either horizontal or vertical) so that it is as perpendicular to the sun as possible, in order to maximize insolation.
5. Keep track of the ambient air temperature.
6. Do not place the thermometer in direct sunlight.
7. Change only one variable at a time during the experiments, and maintain all other factors constant, e.g., record all temperatures and air flow data, changing only the vent size *or* the height, not both simultaneously.

If desired, graphs may be prepared to describe height vs. airflow, height vs. temperature, vent size vs. air flow, or vent size vs. temperature. Data may be recorded on Attachment V-6-M : Data Collection Sheet.

Attachment V-6-M

SOLAR AGRICULTURAL DRYER MODEL
DATA COLLECTION SHEET

Ambient air temperature: 20°C

Model Description and Configuration	Air Flow (none, low, high)	Outlet air temperature
One section, vertical	Low (negligible)	29°C
Four sections, vertical	High(1.5liters/sec)	45°C
One section, Horizontal	None	35°C
One section, 45° Tilt, small inlet	High(.5liters/sec)	
One section, vertical, small outlet	Low (.1liters/sec)	
Four sections, 60° Tilt small outlet	High	

VENT SIZING WORKSHEET "A"

Given that a solar grain dryer has the following insolation, collection aperture, and temperature difference, calculate the size of the vents needed to provide circulation.

Hourly Insolation $\left(\frac{Kgcal}{m^2 hr}\right)$	Aperture (m^2)	Height (m)	Δt (^oC)	Vent Area (cm^2)
500	3	2	32	
1,200	4	2.5	40	
1,200	3.5	3	40	
800	4	3	33	
750	3	1	25	

Use the formula: $$\text{Vent Area } (cm^2) = \frac{\text{Hourly Insolation } \left(\frac{Kgcal}{m^2 Hr}\right) \times \text{Aperture}(m^2)}{.01\sqrt{Ht\ (m) \cdot \Delta t(^oC)}\,\Delta t(^oC)}$$

VENT SIZING WORKSHEET "B"

Given the following information on solar agricultural dryer, use the appropriate formula to find the air flow developed by the dryer:

Vent Area (m^2)	Vent Area (cm^2)	Ht (m)	Δt (^oC)	Air Flow $\frac{m^3}{min}$
.01	--	2	40	
.2	--	1.5	30	
.75	--	2	35	
1	--	2	20	
--	500	2.5	25	
--	800	2.5	30	
--	1500	3.0	45	
--	1750	3.0	10	

Attachment V-10-P

CASE STUDY AND QUESTIONS FOR DISCUSSION (Taken from *WID: A Volunteer Training Resource Book*)

This is a three-year project which has been in operation two years. It has just been evaluated, and while the implementation is slightly behind schedule, the goals are being met.

Nevertheless, some disturbing information comes to light during the course of a visit to the project site by CARE staff. The Country Director and the Assistant Country Director discuss the matter and determine to find out what happened and how the project can be revised.

Details are contained in the following Project Description and the record of the discussion.

Project Description

In an effort to make more productive use of its resources, the government is relocating people from overpopulated coastal regions the interior, opening a new area which has been underpopulated, d which has great potential for agricultural production. CARE has en invited to participate in the Resettlement and Integrated Rural velopment Program being planned and coordinated by the Rural Development Office. Also involved are the Ministries of Education, Health, Agriculture, Public Works and Transportation. In addition, the Department of Cooperatives, the National Nutrition Planning Board and the Provincial Government are involved.

The government has established a village, put in basic roads and cleared the land. It has relocated landless peasants from the coastal areas and promises to deliver housing, potable water, land and other agricultural inputs such as tools, equipment, seeds, fertilizer, training and extension services, a school and health facilities. A production and marketing cooperative will be established, with credit facilities attached.

About 2,000 people/400 families are participating in the program in this phase. They are ethnically homogeneous, but are of a different group than the people which inhabit the region. However, there are no other settlements nearby the new village.

Water System

CARE will work with the Ministry of Public Works and Transportation to provide the village with water for household use. The ject may be expanded to include irrigation systems after the tial phase of three years. CARE will provide the construction

---

1) Developed by Maryanne Dulansey, Consultants in Development, Inc., Washington, D.C.

materials, technical assistance, and supervision, as well as food commodities for Food for Work. The community will provide the unskilled labor. The Ministry will supply the plans.

Another component of the project will be a sanitary education program to educate users on the relationship and importance of clean water to good health, the prevention of water-borne diseases, and the need for proper handling and disciplined water consumption. The Ministry of Health will supply two Community Health Aides to undertake the program.

Goals

Provide constant, readily-available supply of potable water to 400 families in the village.

Reduce incidence of water-borne diseases in the village.

Agriculture

The main economic activity of the settlers is agriculture. New crops such as soybeans will be introduced, as the land is especially well suited to such cultivation. A five-hectare plot of land will be given to each farmer, together with seeds, fertilizer, and tools. Short training courses will be held, and the Ministry of Agriculture will station extension agents in the area. It is expected that production will be very high, due to the fertility of the soil, the favorable climatic conditions, and the potential for multiple cropping, in addition to the improved technology which will be introduced. While the farmers will own their own plot of land, they will work cooperatively, in order to share equipment for land clearing and ploughin

The Agricultural Marketing Board of the Ministry of Agriculture will market the soybeans; the Farmers' Cooperative will provide storage for corn and beans for local consumption, and will sell the surplus through the Marketing Board.

CARE will provide seeds, tools and technical assistance to the Ministry of Agriculture, and give training courses for the officers and staff of the Farmers' Cooperative in bookkeeping and office management.

Goals

Improve the standard of living of small scale farmers and their families by increasing agricultural production.

Integrated Health Services

CARE will provide take-home food supplements and medical

services to the pre-school aged children of mothers enrolled in the program. At the health clinic (which has already been built by the Provincial Government) information regarding improved nutrition, child care and health practices as well as health services and family planning advice will be made available to 400 mothers. Their children will be recipients of free health care including deworming, immunizations against BCG, malaria, and smallpox. CARE will provide the food commodities and will develop the materials required for education and maintenance of the program, as well as the training for the Ministry of Health Community Health Aides assigned to the program.

Goals

Improve the nutritional and health status of pre-school children by providing food supplements and health care for the children and by improving the health care practices of mothers.

Promote participation in family planning program.

Staff Discussion

On a visit to the site of the Resettlement and Integrated Rural Development Program, the Assistant Country Director discovered that, although the evaluation of the program at the end of two years showed progress toward attainment of the goals, the project seemed to be having adverse effects.

One of the problems had to do with the agricultural component. In the course of watching people work in the field, the CARE staff person noticed that they were women, and began to speak with them, learning that the arrangement of 5 hectare family plots was not satisfactory. Since the government was encouraging the growing of cash crops--soybeans--most of the farmers grew barely enough corn and beans--their traditional diet--for consumption. The settlement scheme does not provide for kitchen gardens, which the women traditionally kept for the raising of vegetables for family consumption and for the local market. The women had formerly been in charge of growing the food for the family, with the exception of the corn. However, that arrangement had been changed by the delivery of agricultural inputs and services to the men in the resettlement program. The proceeds from marketing the crops were retained by the men. No wages were paid to the women, although they spent the greater part of the day working in the fields, especially during planting and harvesting times. Because more land was put under cultivation, the work load of the women was increased. Mechanization was provided for the clearing and ploughing portions but not the planting, weeding, and harvesting.

Because of the demand for increased labor in the types of work traditionally done by women, mothers were keeping their daughters from school so they could help them in the field.

Men were primarily engaged in construction projects, and

spent even less time in the fields than they otherwise might have. They also participated in training courses and received the loans from the Farmers' Cooperative for purchase of improved seed and fertilizer.

Great dissatisfaction was expressed with the way in which the houses were being built. The women did not like the improved type of roofing; they preferred the cooking arrangements to be outside the house; and they said the houses were "facing the wrong way."

In spite of good attendance rates at the clinic, it was discovered that the mothers were sending the preschool children with older children in order to get the food supplement. The mothers were not, however, receiving the nutrition, sanitation, and child care education.

The Community Health Aides who were charged with educating people about the proper use of water discovered that the women preferred to have a community supply rather than have water piped to each four-house cluster. They still used the river for washing clothes, in spite of having water near their houses.

Women refused to boil the water, complaining that it would require more fuel to be gathered, for which they had no time. Besides they said, if the water came from a pipe, it must be good.

The food storage program run by the Farmers' Cooperative was operating successfully. It was one way of controlling the production of food, and gathering statistics. Food waste was also sharply reduced, because fumigants were used, and good silo construction prevented rodent depredation. The women, though, did not "trust" the cooperative, and would keep supplies of food out of the harvest for home storage, as they had been accustomed to do.

The staff discussed these findings, and came to the conclusion that these situations had occurred because the planners failed to take into account the role which women played. Although some of the goals of the projects were being met, the projects seemed to be having some adverse effects on development.

They attempted to list the erroneous assumptions made in the planning stages, discover what was actually happening, and redesign the projects so they would have better overall effect, and better impact on women. To do this, they worked with some of the government people involved in planning and implementation.

Please turn to Questions for Discussion, and, based on this Case Study, note your reactions and ideas.

QUESTIONS FOR DISCUSSION

1. List 3-5 assumptions made by the program planners. List the effects of the assumptions. Were they accurate or erroneous?

Assumptions	Effects	A or E

2. What effects do you think the project may have had on this community? Women? Men? Families?

Project Activity	Effect on.. Community	Women	Men	Families

3. What would you do differently in the PLANNING PROCESS? Why?
IMPLEMENTATION? Why?

Planning	Why?	Implementation	Why?

Attachment V-13-Q

DESIGN WITH CLIMATE WORKSHEET

Given the following four different types of climates, describe the type of house or dwelling which would be most appropriate for each by listing the characteristics of each house (such as color, shading, ventilation, thermal mass, south glass, orientation, insulation, overhangs, etc.).

Hot-Humid CLimate:

Hot-Dry Climate

Temperate Climate:

Cool Climate:

Previous Page Blank

This exercise adapted from: Food: Where Nutrition, Politics and Culture Meet
The Factors Influencing the Price of Food (pp. 137-138)

In this exercise, predictions are made concerning the effect of various factors on the price of food. The situations listed below should be typed on index cards, and a full set prepared for each group of 4-6 people. The cards are distributed, one at a time, at five to ten-minute intervals. As the groups receive each situation card, they should predict how and why the price of oranges would be affected. When each group has prepared an answer, the predictions are compared and discussed briefly. At the end of the activity, the small groups (or, if time is a constraint, the large group) should discuss the following:

1. Does this exercise reflect your perceptions of realistic product-price fluctuations?
2. In the case of oranges, would price change have any effect upon wages and working conditions of orange grove workers? What about the case of cash-crops, such as bananas or coffee?
3. What measures could be taken to prevent prices from rising rapidly in each situation given?
4. Do comparable situations exist in the developing world, or are these situations primarily representative of the U.S. and Europe?

The Situations:

A. A team of medical researchers confirm the role of Vitamin C in preventing colds.

B. An orange-flavored drink is invented which contains an amount of Vitamin C equal to that contained in oranges; however, the new drink costs half as much to produce as natural orange juice, and marketing test results indicate that people think it tastes better than the real thing.

C. A Florida Land Grant College develops methods to quadruple orange yields at a minimal cost to growers.

D. The U.S. Government signs a trade agreement with the Soviet Union that one-fourth of all oranges grown in the U.S. over the next 5 years will be traded to the USSR in exchange for vodka and caviar.

E. "White's" oranges begins a massive advertising campaign on TV, billboards, radio and magazines claiming that its oranges are "the juiciest, sweetest, best-tasting oranges in the world". Their sales rise, influencing other companies to advertise more.

F. "Whites", producing a large share of the oranges on the market, decides to expand vertically. It purchases trucks, orange-crate factories, wholesale warehouses, label-printing factories, an advertising agency, and hires a 500-person nationwide sales staff. It gains a larger share of the market and several small companies go out of business.

G. Due to rising petroleum prices, the cost of nitrogen-based fertilizer has nearly tripled in the last 5 years. This fertilizer is widely used in commercial cultivation of oranges.

H. The Federal Trade Commission decides that "Whites" and 2 other growers control too much of the market, and initiates antitrust actions; large firms must sell some of their holding to small farmers in the area.

Attachment V-18-S

PLANNING A LOW-BUDGET, NUTRITIOUS, AND CULTURALLY APPROPRIATE DIET

The following foods and their prices are typical of the diet in the Ecuadorian highland region. You should plan a day's menu that provides enough protein, minerals and vitamins, caloric requirements and fats, within the guidelines of available time for preparation, and economic and cultural constraints:

There are six people in the family, including four children (ages 1-12).

Corn products are usually available, and need not be bought.

There is a scarcity of *quinoa* (a high-protein grain) and it is only available in limited amounts.

Fava beans must be bought, since the crop has failed this year.

You only have the equivalent of one dollar to spend for the day's meals.

Milk and cheese are only available in the city (an hour's walk away, or a 12-cent bus ride), and meat is only occasionally available in the village.

Wild greens are in limited supply since the rains have not been constant.

There is squash available in the fields, but only in limited quantity.

The woman in the family suffers from "white discharge" and will not eat milk products, squash or pork because it may make her condition worse.

Two of the under-five children have diarrhea, and will not be allowed to eat "cold" foods: squash, pork, oranges, papaya.

Guinea pig (*cuy*) is used for festive occasions, as is any other meat product, except for fat (lard).

The family has an income of approximately $60 (U.S.) a month, of which $20 must be spent on the children's education: books, uniforms, fees, bus, etc.

Medicine must be bought for the two children who have diarrhea, according to the parents.

The rains have not come, and grasses (at around 4 cents a bunch) must be bought for the guinea pigs each day, since there is no other food.

There are a few vegetables in the family garden, left over from a previous Peace Corps project, but they are rapidly withering from the lack of water and care.

Planning a Low-budget, Nutritious, and Culturally Appropriate diet, continued

Firewood must be brought down from the mountain (where the *hacienda* owner has his land), a job requiring two days; in addition, the family must repay with labor for the wood carried out.

The husband must be taken his lunch. He works at a construction site temporarily in the city nearby, which is accessible by walking or the bus.

Water comes from the community tap, but the nearest one is not working, so a trip must be made down into the village.

There is a *fiesta* to be held this weekend at the house of relatives. The family is expected to bring food and drink, so money must be put aside to buy extra potatoes, lard, beans, and a bottle of *trago*.

The woman's breast milk is drying up, and the one-year-old is losing weight.

One of the children is expelling worms when he defecates; the mother restricts his intake of milk and other "cold" foods until the worms are gone.

Money must be kept aside for cooperative dues (20 cents a month).

The bean water (from cooking beans) cannot be used due to the woman's illness (the white discharge).

The family is afraid of extremely "cold" foods, especially in the early morning or at night. Such foods are: cabbage, pork, squash, oranges, and any leftovers that have not been boiled.

The biggest meal is at mid-day, and must include beans, corn, soup (with a corn or oatmeal base, or a broth with potatoes and suet), and potatoes.

There are two other meals: early morning, where herb tea and sugar are drunk with a piece of bread or toasted corn, or leftover soup; and the evening meal, where soup, or leftovers from lunch, are served.

<u>Foods and Prices</u>:

Beans -- 20-40 cents a lb. (some may be available from crop)
lentils -- 30 cents a lb.
fava benas -- about 40 cents a lb.
quinoa -- 30 cents a lb.
cuy -- 4 dollars per animal
meat -- 1 dollar a lb.
suet (fat from meat) -- 50 cents ½ lb.
lard -- 75 cents ½ lb.
vegetable shortening -- 75 cents a lb.
oil -- 1.20 a liter

bananas -- 2 cents apiece
oranges -- 2 cents apiece
onions (scallion-type) -- 12 cents for 5-6 onions
rice -- 30 cents a lb.
lettuce -- 20 cents a head
cabbage -- 30 cents a head
watercress, other greens -- 4 cents a bunch
tomatoes -- 7 cents apiece
chili peppers -- 4 cents for 5-6
potatoes -- 12 cents a lb.
chicken -- one dollar a lb. (only in 3-4 lb. quantities)
milk -- 25 cents a liter
cheese -- 1 dollar a lb.
raw sugar -- 10 cents a block (2 cups, more or less)
white sugar -- 25 cents a lb.
herbs -- 1-4 cents a bunch
papaya -- 30 cents apiece
canned tuna -- 1 dollar a can
noodles -- 50 cents a lb.
bread -- 2 cents
eggs -- 10 cents apiece
butter -- 1 dollar a lb.
spices -- 4 cent oz.
soft drinks -- 15 cents
liquor (*trago*)-- 1 dollar a bottle

After completing the exercise, please take some time to discuss, in writing, the following:

1. Name several economic constraints that limited the amounts or types of foods bought.
2. Name several social/cultural considerations you followed in planning the diet.
3. What was the most difficult aspect of the planning, i.e., the economics, cultural factors, availability or scarcity of foods, etc.?
4. Which major nutrients are included (in proper amounts) in the diet planned? Which are lacking?
5. Do you think that a rural family can eat nutritious meals based on the information included in this exercise? Explain.
6. What would you add or delete from the exercise?

THE COMING OF THE RATS

(From *Report on Progress: Methane Gas/ Nutrition-Health/ Agriculture Project, Iluman, Ecuador*, Warpeha, Goldman, and Fechner, 1977)

Winter has come. First the clouds and then there were dark rumblings, promising rain and an end to the dust, the monochromatic grays and browns and yellows. And then tentitive drops, and then sheets and sheets of welcome, sometimes overwhelming rain. The patterns has been established, sunny mornings, rainy afternoons. One day hail rained down in Iluman, pea sized drops of ice. Taita Jose Antonio, a patriarch, said that it was a good sign, that there would be a good harvest because hail was a good messenger. In the morning, after a hard rain, the earth steams, clouds of vapor hovering over the rich brown color of the soil. Green sprouts shoot up, and the dust has given way to mud on the paths. The digester tank, with its newly cemented floor, threatened to provide us with an unexpected swimming pool, and had to be bailed out. World days now start earlier and end in mid-afternoon. Everywhere, people are urging the *yuntas*, the teams of oxen, to move, to pull the plow, to ready the earth. Planting has begun, hopefully, to provide food for the coming year.

With the beginning of the season have also come the rodents. Actually, as the story goes, the rats have been coming for two years. These are not ordinary rodents, but ones that seem to be super-rats. The stories tell of rats that eat poison and don't die, of rats that swim in the irrigation ditches, rodents that attack the guinea pigs and the chickens. The one's we've seen are over 20 centimeters (8 inches) long, and fat. One day Paul killed a family of nine in the garden. There is a one-winged chicken in the cooking house, a result of a rat attack. In Quito the sale of roast guinea pig (a delicacy) has been stopped by the health department because some people were skinning the rats and cooking them and selling them as *cuyes* (guinea pigs). No one knows what to do in Iluman, but a request has been made to the sanitation people to help. The worldwide statistics of up to 30% loss of crops due to rodents becomes a reality. Perhaps this experience will effect some changes in the storage habits, which in Iluman are to store grains and corn in an open loft in the living quarters.

When the medical team from Quito was visiting last time, the technician who was looking at feces samples called the doctor over to look in the microscope. She thought she had found a tapeworm carried only in rat excrement. Happily, she was mistaken, but it was a chilling moment: rats taken from the historical context and placed in our reality.

Mariano, the story-teller and elder of the group, told us a story at lunch about the rats: "There was an old begger women who went to the house of a rich white man, a landholder, and asked for a little charity, some corn to eat. The white man told her that he had nothing to give, only enough for himself. Then the old woman looked

to the heaven and the white man turned into a rat. From then on, the *hacendado*, the land-owner, had enough to eat, since he was a rat. This story is told in the north, towards Colombia, and it happened about two years ago. From there came the rats."

A CROSS-CULTURAL SIMULATION *

Farmer #1

You have a small farm and a large family which you know will care for you in your old age. The four boys work in the fields while the three girls work with their mother at home except at harvest and market time. The women take the crops to market. The girls go to school a bit longer but no one goes to highschool. If there is a chance for a scholarship, a boy would go. You're concerned with how such a small farm will be divided up among four boys and when the girls marry. This is the way it has been for centuries. While tough at times, it's been a good life. You're considered a progressive farmer in that you take risks but you're less likely to take risks to change old family traditions. You want a better life for your children.

Farmer #2

You have a small farm and some cattle which makes you a bit more influential than most farmers. You have three girls and three boys. When your wife died, the oldest girl became the "mother" and, along with the other girls, does all household chores (cooking, gathering firewood, making cheese, washing, going to market, etc.). Since you have few crops, you and the boys do all the heavy farm work. On occasion, the girls help with crops but cattle are the boy's job. The boys study agriculture at the nearby vocational school. The girls left school after primary. Your girls will likely marry higher in social status since you have cattle. Your boys will probably buy other small farms. Since you're a progressive farmer who's had mostly good luck and the future looks good, you're reluctant to upset the apple-cart. You like things the way they are. You are open about this and your family situation since you're proud of what you've built.

---

* Taken from *WID: A Volunteer Training Resource Book*

Agriculture Extension Agent

Your interest is primarily in agriculture and working with farmers but you are supportive of other community activities. You are open to new ways of doing things. You are also forthcoming with criticisms of old traditions because of your youth and education. You like to talk and are respected for your work and ability to motivate people. You especially want to help the Volunteers move this sleepy village forward. You resist, however, what you've heard above women's liberation in the West although given the right approach would be supportive of some change in your country.

School Teacher

You are a progressive school teacher with a good education. You've returned to your village to help. On occasion you're impatient with the old ways but you resist too much pushing from the outside because you respect your traditions. You are an articulate spokesperson for those traditions and values which you see need to change if healthy change is to occur. You feel ardently that women are oppressed because of the difficult time your Mother had after your Father died.

Merchant

You are a very pragmatic person who accepts change when it's in your interest and resist when it's not. You are good at finding a safe, slightly progressive middle ground when there are differences. You appear responsive and understanding to both sides. For example, you avoid taking sides but are able to add comments to or paraphrase each side's position or thoughts. You have ambivalent feelings about women wanting to do more since your daughter wants to go to normal school. Many community members wait to see what you say or do before they take a position or act. Although you're powerful, you're fair but not rich.

Simulated Cultural Setting (Situation):

Two Volunteers have been working in and around a small village for nearly six months. One Volunteer works with small farmers in the area and has been trying to organize a farmers' association or cooperative. The work has been going slowly, the Volunteer is frustrated but optimistic, has identified other community needs, and is trying to involve people in responding to the needs.

The other Volunteer works with the local school as a teacher and is involved in a variety of school activities. One of those is a school garden project. The Volunteers have worked together on this project and thus have common friends and colleagues among the community leaders.

Through their collaboration and joint analysis they have identified a set of needs which are linked they believe. Two of the needs, nutrition education and youth recreation are apparent to many community members. The third, more direct involvement of women in development, is not readily apparent. The Volunteers suspect this would be a sensitive subject so they want to be cautious. They feel a need for more information on the role of women in the community and a better understanding of why it's that way. They have some hunches and reasons for conclusions but need to begin to check them out. They have decided that an overtly direct approach to an inquiry would be viewed with suspicion and mistrust.

They have met previously with a small group from the community and have decided to bring them together to discuss nutrition education and recreation needs to see if there is interest and to determine some next steps. In the context of these subjects, they believe they can talk openly about women since they could play a big role in both of these should projects get underway. Also, it will provide valuable insight to whether or not women can play a formal role in agriculture or other development activities. The real, but hidden, agenda is then to find out as much about women as is possible without offending, by appearing obvious, your friends.

The five community members are: the agriculture extension agent; two farmers; a school teacher; and a merchant. The agriculture extension agent works with both Volunteers on occasion. He also has helped the two farmers with crop problems. The school teacher has been involved with all participants since she/he supervises the school garden project for which the merchant supplies fertilizer free and the agriculture agent provides some guidance. The farmers' children know him/her through school. The farmers buy many items from the Merchant's "General Store" and, on occasion, sell him their crops.

They have decided to meet at the local community meeting hall which is a large, open room adjacent to the school, with a few tables but mostly chairs. The Volunteers arrive early.

Role Descriptions

Instructions to the Trainer:

Each person, including the Observers, will have read the "Simulated Cultural Setting." For the role descriptions which follow, you should only give the description corresponding to the person who will play that role. Emphasize that the simulation, to have a "real" and "live" quality, depends on people not knowing the others' role. Cut along dotted lines and distribute the roles.

Volunteer #1

Your job has been to work with small farmers to form an association or cooperative. It has been going slowly and you're frustrated but optimistic. Because of the slow pace and frustration you're looking for additional things to do. You tend to get a little impatient and on occasion are too direct and try to hurry things along. That is useful when the group trusts you which this one does. You are puzzled about why women aren't more obviously involved with projects like yours. You want to find out why and believe they are a resource going to waste.

Volunteer #2

You work with the school as a teacher but are very active in other school projects like the school garden. You are satisfied with yourself and your work but you are looking to link nutrition education and youth recreation to your school garden activities and the other Volunteer's work with farmers. Why people aren't more interested in nutrition education and recreation for children puzzles you and you suspect it is because women play those roles informally but would meet resistance to being involved in formal, community activities. You have the group's respect so it is easy for you to probe.

TASK ANA

PROJECT : Build a Solar Agricultural Box Dryer

TASKS	TASK ELEMENTS	PERFORMANCE CRITERIA	KNOWLEDGE AND COGNITIVE SKILLS	MATERIALS	TOOLS
1. Estimate drying demand regarding use & volume			Knowledge of per person or per family agricultural drying requirements Knowledge of harvest information; types of food to be dried	Paper	Pencil
2. Collect or obtain local climate data		Data covers all seasons	Knowledge of informed sources of climate data		
3. Select site	Obtain sun angles for required latitude Perform sun angle calculations at several potential sites Compare data from several sites & overall selection	 Calculations are arithmetically correct Selection is made on basis of most favorable result	Knowledge of sun angle formulas & equations	Paper	Sun angle chart, universal protractor, compass Pencil

TASK ANALYSIS

PROJECT : Build a Solar Agricultural Box Dryer

TASKS	TASK ELEMENTS	PERFORMANCE CRITERIA	KNOWLEDGE AND COGNITIVE SKILLS	MATERIALS	TOOLS
4. Determine insolation	See Project : Make & Use an Insolation Meter	Accurate readings & calculations	Finding temperature gain & loss, calculating insolation	Paper	Pencil
	Make conversions between metric & English systems as necessary	Correct arithmetic	Knowledge of relationship between BTU/ft^2 & national or local measurement systems	Paper	Pencil, conversion chart
5. Size system	Determine frequency of use, quantity of material to be dried, & length of time to dry	Correct system	Knowledge of requirement & insolation		
6. Design solar collector	Identify glazing		Understanding of different glazing materials	Proper glazing material	
	Determine glazing angle	Adequate temperatures are obtained	Knowledge of latitude		
	Identify absorption plate, if any				

TASK ANY

PROJECT : Build a Solar Agricultural Box Dryer

TASKS	TASK ELEMENTS	PERFORMANCE CRITERIA	KNOWLEDGE AND COGNITIVE SKILLS	MATERIALS	TOOLS
7. Assemble materials					
8. Construct frame		Frame strong enough to support finished system	Basic woodworking tool skills	Wood, nails	Measuring device, saw, square, hammer
9. Attach backing, sides, & bottom to frame	Construct back access/ loading door Install with hinges & latches Attach bottom & legs for unit			Hinges, nails, screws, wood	Same as above; screwdriver
10. Construct air circulation system	Drill holes in bottom near front & top back Screen over holes	Sufficient venting size to allow proper air exchange rate	Basic woodworking skills	Screen	Drill or hole saw, hammer, tacks

TASK ANALYSIS

PROJECT : Build a Solar Agricultural Box Dryer

TASKS	TASK ELEMENTS	PERFORMANCE CRITERIA	KNOWLEDGE AND COGNITIVE SKILLS	MATERIALS	TOOLS
11. Affix rack runners		Proper sizing for racks			
12. Paint inside black				Paint, cleaning solution	Brush
13. Glaze	Measure & cut glazing material Seal glazing material	Work done neatly so as not to detract from transmission properties of glazing Watertight seal	Understanding of pros & cons of different glazing materials	Sealing, glazing material	Measuring device, shears, tacks hammer
14. Weatherproof box if necessary	Caulk or seal all cracks Paint with water-resistant material	Watertight seal		Weather-proofing material	Brush
15. Build drying racks	Build frames Affix screen to frames	Correct sizing for runners Racks hold weight of agricultural product		Screen, wood	Measuring tape, wood, nails, twine

TASK AN

PROJECT : Build a Solar Agricultural Box Dryer

TASKS	TASK ELEMENTS	PERFORMANCE CRITERIA	KNOWLEDGE AND COGNITIVE SKILLS	MATERIALS	TOOLS
		Overall Criterion Sufficient hot air is generated to dry a specific agricultural product & prevent pest infestation When tested, dryer performs according to design criteria			

TASK AN

PROJECT : Build a Solar Agricultural Dryer with a Flat Plate Collector

TASKS	TASK ELEMENTS	PERFORMANCE CRITERIA	KNOWLEDGE AND COGNITIVE SKILLS	MATERIALS	TOOLS
1. Follow tasks 1 -5 on solar agricultural dryer sheet					
2. Design collector	Determine air changes required inside drying box & drying temperatures needed	Sufficient hot air is generated	Knowledge of general drying requirements of particular agricultural product		
	Determine insolation for collection (see Project: Make and Use an Insolation Meter)	Accurate reading of calculation	Finding temperature gain & loss, calculating insolation		
3. Assemble materials					
4. Construct framework with vents	Attach backing			Nails, wood or alternative material	Hammer, saw, measuring device
	Seal unit				

Previous Page Blank

PROJECT : Build a Solar Agricultural Dryer with a Flat Plate Collector

TASKS	TASK ELEMENTS	PERFORMANCE CRITERIA	KNOWLEDGE AND COGNITIVE SKILLS	MATERIALS	TOOLS
5. Place insulation material over backing	Affix insulation in all cavities, leaving no gaps	No visible paths for heat or cold to leak past insulation	Knowledge of different insulation materials	Insulation material	Hammer, tacks
6. Position absorption material over insulation				Absorption material	Hammer, nails, shears
7. Paint box				Paint, cleaner	Brush
8. Glaze & seal collector	Apply caulking or sealer Cover with glazing Nail down	Watertight seal created		Glazing material, caulk or sealing compound	Hammer, nails, saw, shears
9. Screen vent	Cut screen to vent opening size & attach	Seal tight enough to prevent intrusion of pests	Knowledge of types of pests in area	Screen	Hammer, tacks

TASK AN

PROJECT : Build a Solar Agricultural Dryer with a Flat Plate Collector

TASKS	TASK ELEMENTS	PERFORMANCE CRITERIA	KNOWLEDGE AND COGNITIVE SKILLS	MATERIALS	TOOLS
10. Build platform to orient collectors to sun & drying box	Prepare location Tie down platform so it does not settle or blow away	Collector is oriented in proper direction & angle and is secure	Knowledge of required angle of collector & proper orientation	Wood	Hammer, nails, saw
11. Attach collector to drying box	Mount collector on platform Seal collector to dryer inlet vent	Collector securely fastened down No leaks in collector dryer union			
12. Weatherproof unit	Paint with appropriate material	Complete unit is sealed & water resistant		Weatherproofing material	Brush
		Overall Criterion Sufficient flowing hot air is generated to dry specific agricultural product & protect it from pest infestation.			

PLANS FOR A SOLAR AGRICULTURAL DRYER

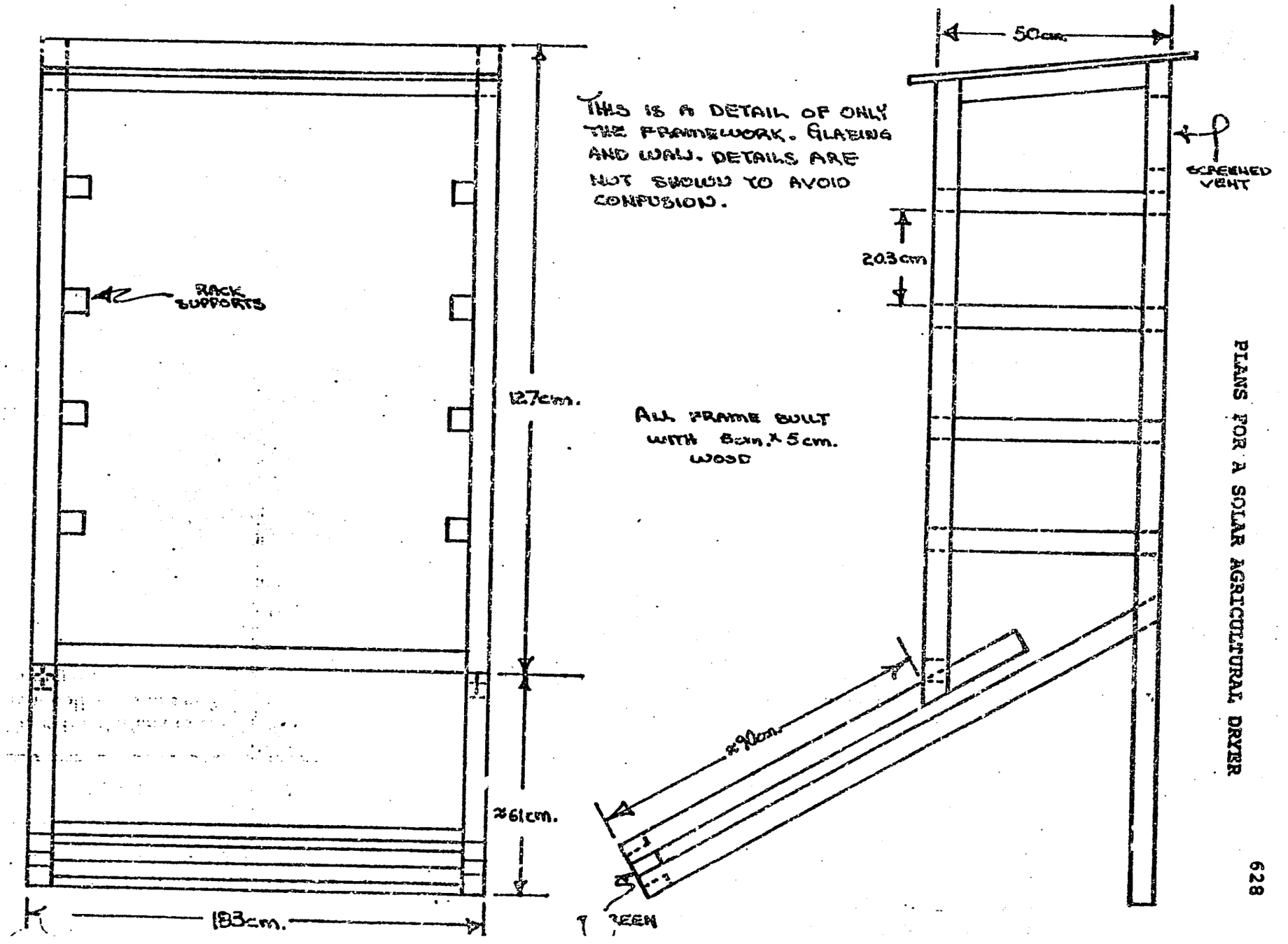

PLANS: DRYING RACKS FOR A SOLAR AGRICULTURAL DRYER

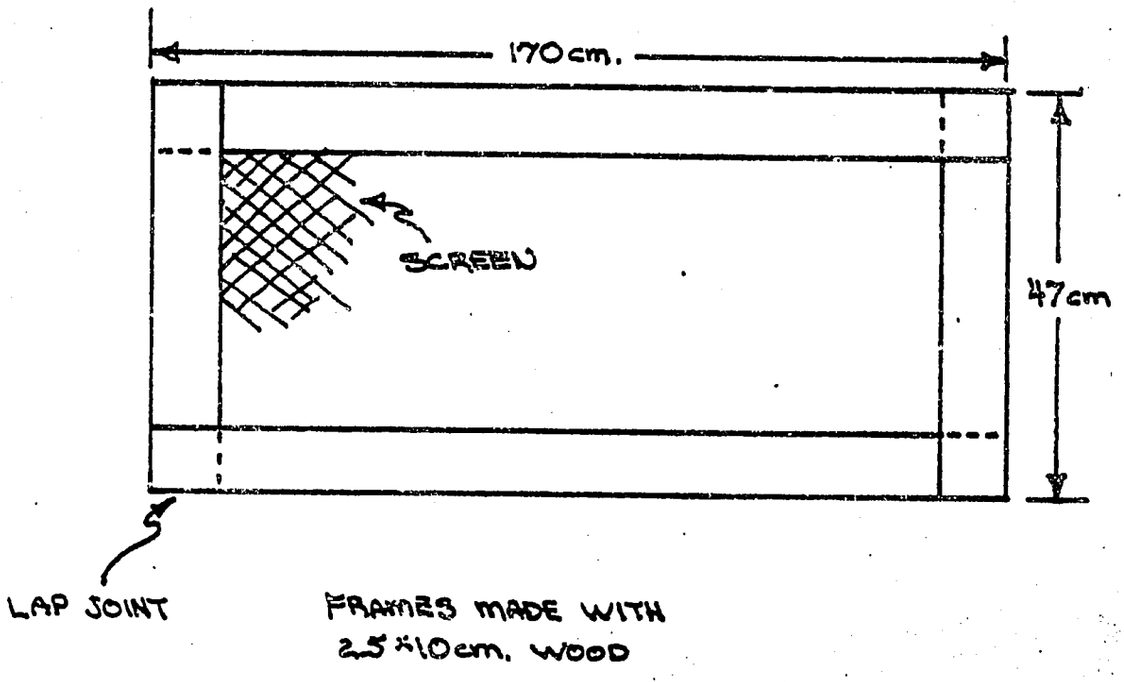

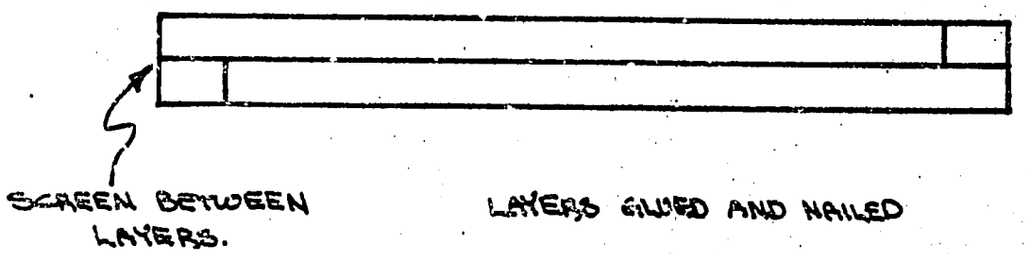

PHASE VI : APPROPRIATE COMMUNITY TECHNOLOGY: INTEGRATION OF THEMES

HEALTH / NUTRITION

WOMEN IN DEVELOPMENT

THE ROLE OF THE VOLUNTEER IN DEVELOPMENT

Previous Page Blank

	DAY 1	DAY 2	DAY 3
A.M.	Session 1: Introduction to the Final Phase Session 2: Preparation Time for the Demonstrations	Session 3: Assessing Community Energy Needs: The Peace Corps Energy Survey Session 4: Integrated Demonstrations, Part I	Session 7: Resources Session 8: Integrated Demonstrations, Part III
P.M.		Session 5: Women in Development: Project Assessment and Revision Session 6: Integrated Demonstrations, Part II	Session 9: Individual Study Time Session 10: Integrated Demonstrations, Part IV

	DAY 4	DAY 5	DAY 6
A.M.	Session 11: Assessing the Role of the Peace Corps Volunteer Session 12: Preparation for the Energy Fair	Session 13: Energy Fair	Session 14: Evaluation and Clean-up
P.M.			

SESSION 1
Introduction to the Final Phase

Time: 2 hours

Objective: The Trainee will begin to apply the knowledge, attitudes, and skills acquired during the training program, in a manner that demonstrates a grasp of the training philosophy and goals.

Overview: The last phase of training serves as an opportunity for the Trainees to reflect upon their progress and changes, and to draw together the major themes of the program in a way that integrates the learning experiences that have occurred in the past weeks. They are urged to contemplate and digest what has been learned, and are encouraged to work independently, and in small groups. It is intended that the Trainees will be guided toward the development of individual styles and approaches that will assist them during the transition from training to Peace Corps service, and will serve them well during their time overseas.

Throughout the week, the Trainees utilize the cognitive and physical skills they have gained to demonstrate an understanding of potentially appropriate technologies within the context of the social, cultural, economic and health considerations that exist in developing countries. This session provides an introduction to the week's activities and objectives.

Suggested Resources

Attachment VI-1-A : The Role of the Appropriate Technology Extensionist: Transition to Peace Corps Service

Attachment VI-1-B : Demonstration Guidelines

Materials Needed: Chalkboard and chalk, or newsprint and markers.

Procedure

1. (15 minutes) The Trainer introduces the last phase of training, and gives an overview of the week's activities, including:

   - A final, integrated demonstration of the technologies used and the devices built during training, including their potential applications, and impact on local traditions, customs and systems.

   - The Trainee's written perceptions of the role of the appropriate community technology extensionist.

   - A community meal and energy fair.

2. (10 minutes) The Trainer distributes Attachment VI-1-A, reviews it, and explains the purpose of the exercise. The

written description should reflect the integrated nature of appropriate community technology, and a sensitivity to the various development issues raised during the program. The paper will be discussed during *Session 11* and will be collected at that time.

3. (20 minutes) The format for the final demonstrations is explained and discussed: During the program each Trainee has participated in all phases of design, construction, and use of a Lorena stove, a pedal powered device, a solar water heater, and a solar agricultural dryer; in addition, each Trainee has acquired and developed a number of extension techniques to transfer information in an effective way. Based on those physical and cognitive skills, groups of Trainees will demonstrate each of the devices that their group has built, and will present the technologies in a way that integrates them with the socio-cultural, health, economic, and environmental realities of developing countries.

At this time, the Demonstration Guidelines (Attachment VI-1-B) should be distributed and reviewed. The Trainer may wish to give an example of a demonstration, such as the step-by-step processing and preparation of a food, including, drying, grinding, cooking, and washing plates. The presentation would include the health and nutrition aspects of the devices, and their implications for the involvement of all community members affected by their use.

4. (1 hour) In work groups, the Trainees begin planning their demonstration, according to the following guidelines:

- the tasks are equally divided so that all group members actively participate
- decision-making is by consensus
- the demonstration utilizes the concepts of adult learning
- major advantages and drawbacks of each device are presented
- a variety of communication techniques is used
- the devices are modified, if necessary, to make them suitable for demonstration
- the demonstration of each device is related to the use of the other technologies
- implications for health, nutrition, and the involvement of women are included
- socio-cultural, economic, and environmental considerations are discussed.

5. (15 minutes) The schedule of available times for demonstrations are posted. *Session 4, 6, 8, and 10* have been designated for final preparation time and presentation; however, only two groups should give demonstrations in any session. Before the next session, Trainees should arrange the time slot their group will occupy.

SESSION 2
Preparation Time for the Demonstrations

Time: 6 hours

Objective: See *Sessions 1* and *4*

Overview: In order to prepare for the various activities, time is allotted for independent and group work. The Trainees may develop their demonstrations, or use the time for completing other projects and assignments.

Materials Needed: Determined by individual projects.

Procedure

The Trainees schedule their time independently, according to the tasks that they have chosen. It is suggested that one of the following activities be pursued:

- modification or adaptation of the devices in preparation for the demonstrations
- development of the demonstration methodology, visual aids, and extension tools
- study and writing of the assigned work (Attachment VI-1-A: The Role of the Appropriate Community Technology Extensionist)
- continuation of independent projects.

Previous Page Blank

Previous Page Blank

SESSION 3
Assessing Community Energy Needs: The Peace Corps Energy Survey

Time: 1 hour

Objective: The Trainee will become familiar with a data collection and survey instrument, and will suggest its potential applications as a tool for assessing community energy needs.

Overview: An important component of the Peace Corps Energy Program is directed toward collecting and analyzing basic data on rural community energy requirements and use. Such efforts are intended to identify needs and, based on that knowledge, develop programs in renewable sources of energy that are aimed at improving the quality of life in rural areas. A primary data collection instrument is the community energy survey, which utilizes a standardized form to ascertain the types and amounts of energy needed and used in rural areas of developing countries throughout the world. In this session, the Trainees examine the concept and design of the survey, and suggest potentially useful ways of applying it.

Suggested Resources

Congdon, R. J., *Introduction to Appropriate Technology*, pp. 63-71. (Handout)

"Concept Paper for Peace Corps Energy Program" and "Survey Instrument", both available from Peace Corps Energy Program, OPTC/ACTION, Washington, D.C. (Handouts)

Note: The Congdon article should be read prior to the session.

Procedure

1. (10 minutes) The Trainer talks briefly about the purpose and design of the energy survey, and reviews the Congdon article.

2. (35 minutes) The energy survey instrument is divided in five parts: the village; domestic energy use; small food shop energy use; agricultural energy use; and renewable energy. The Trainees form five groups, and each group analyzes and discusses one part of the survey. Some questions for consideration and discussion are:

- What type of information does the survey make available? What type does not appear?
- How can the information be used?
- What other types of information would be necessary to design an energy program?
- How could the survey instrument be improved?

Previous Page Blank

- Based on specific job assignments, how could the survey instrument be applied to implement the energy plan of a particular country?

- Would you use the survey to assess local needs? why or why not?

3. (15 minutes) The groups join and discuss their conclusions. The Trainer should guide the discussion, using the questions for consideration in procedure #2.

SESSION 4
Integrated Demonstrations, Part I

(*Note: Sessions 6, 8* and *10* --parts II, III, and IV of Integrated Demonstrations-- are identical to *Session 4* and do not appear as separate entities in the manual.)

Objective: Based upon an awareness and understanding of the interrelationships that exist among technology and development issues, health, community systems, and socio-cultural realities, the Trainee will plan and participate in a presentation that demonstrates technologies based on renewable sources of energy and exemplifies the integrated nature of appropriate community technologies.

Overview: The groups demonstrate the various devices built during the training program, and receive constructive feedback concerning the content and style of the presentations.

Suggested Resources

Attachment VI-1-B : Demonstration Guidelines

Materials Needed: Determined by the individual requirements of the demonstrators.

Procedure

1. (30 minutes) The groups continue to prepare for their demonstrations.

2. (1 hour 30 minutes) The two scheduled demonstrations are given; the time allotted for each is 45 minutes, including 15 minutes for discussion and evaluation. The audience should consist of Trainers, other members of the training community, Trainees, and people invited from the local community. The guidelines presented in Attachment VI-1-B, and in *Session 1*, should be reviewed briefly. The Trainer should remind those presenting demonstrations to:

- be sure to have a clear and accurate understanding of the construction and operating principles of the devices
- be able to explain the advantages, drawbacks of the devices, and their implications
- communicate the simplicity of the devices in non-technical terms
- draw the audience into the discussion and operation
- utilize the talents of the audience as a resource
- conclude the demonstration with plans for the future.

The groups should also be assured that the demonstration may be considered successful if the nature of the technology has been effectively communicated within a larger context. A community's rejection of the technology does not necessarily imply failure.

When each demonstration has been completed, the audience provides constructive criticism and observations concerning the extension skills used, and the relative effectiveness of the presentation (see Attachment VI-1-E). Evaluation should also be based upon the group's ability to work cooperatively during the presentation, their technical expertise and the utilization of the recommended guidelines in *Session 1* and Attachment VI-1-B.

SESSION 5
Women in Development: Project Assessment and Revision

(Adapted from Session #8 in *WID: A Volunteer Training Resource Book.*)

Time: 3 hours

Objective: The Trainee will assess the degree to which Peace Corps projects and assignments influence and include the participation of women, and will develop strategies to modify such development efforts in order to facilitate the full and active involvement of all people affected by technological innovation and change.

Overview: Based on a new or enhanced awareness of the relationship of women to the development process, the Trainees may focus on their future Peace Corps service, within the context of women in development issues. Current programs are analyzed as much as possible, to ascertain their potential impact on women in developing countries, and suggestions are formulated for appropriate methods to include women (and other community members affected by a project) so that technological innovation may exert a positive influence, and help improve the quality of life.

Suggested Resources

Attachment VI-5-C : Project Assessment Checklist

Attachment VI-5-D : Women in Development: Defining an Approach

Materials Needed: Chalkboard and chalk; or newsprint and markers; tape.

Procedure

1. (10 minutes) The Trainer reviews the objective and presents an overview of the session.

2. (10 minutes) The Project Assessment Checklist (Attachment VI-5-C) is distributed and explained. It should be noted that the list is not all-inclusive, and some items may need to be added during the following activity. Questions should be addressed, and any uncertainties clarified.

3. (45 minutes) Individual project and/or job descriptions, site information, and other explanatory materials are distributed. The Trainees are asked to review all the materials, and use the Assessment Checklist to analyze the project or program in regard to the involvement of, and potential impact on, women.

Note: If individual project material is not available, a current project in the assigned country may be substituted. However, it is hoped that the Trainees will already be familiar with their Peace Corps assignments, and will have seen the relevant information before the session.

Note: A break may be scheduled before the next activity.

4. (30 minutes) The Trainees form groups of 4-6, and discuss their projects based on readings and the Assessment Checklist. The Trainer may join the discussions and circulate among the various groups. The following questions should be used as guidelines:

- What areas of the project will have a probable impact on women? in a positive or negative way? through direct or indirect influence?

- What other information do you think you should find out, or will need to have clarified?

- (for women) How do you think that being a female PCV in this project will influence the participation of local women? will influence other aspects of the project?

5. (15 minutes) All Trainees gather, and the Trainer guides a general discussion, based on the reports from the small groups. Summary statements, highlights and common observations should be noted on a chalkboard or sheet of newsprint.

Note: Many of the project descriptions will either vaguely include references to women, or will not clearly state the anticipated impact on, or involvement of, women. It should be mentioned that it is probable that the Trainees will have to conduct more research when they arrive overseas, and will have to ascertain the actual level of women's involvement by personal observation.

6. (20 minutes) The article "Women in Development: Defining an Approach" (Attachment VI-5-D) is distributed and read. An alternative plan is to present the contents of the article as a talk. A brief discussion should follow, in order to address questions, or clarify any observations.

7. (30 minutes) Small groups re-form, and develop a potential plan of action for a composite or hypothetical project in response to the questions: "Given the information you have concerning your individual project (including the Assessment Checklist, discussions, and readings), what actions might you take to involve women more actively, and to ensure that the impact of the project would result in positive changes? Identify specific actions, including how they would be implemented, and how long they would take." A reporter should be selected in each group to summarize the discussion, and present conclusions to the others.

8. (20 minutes) The groups present their plans during a general discussion guided by the Trainer. At the end of the presentations the Trainer should provide a brief summary, including the following information:

The assessment process is an important phase of project review, planning, or implementation. Its value is enhanced by searching for information beyond that which is provided in documents, statements of good intention, or sophisticated (and often abstract) development plans. However, only when there is an adequate understanding of reasons, factors and causes underlying inappropriate development strategies, may viable plans be made to effect positive changes to benefit all people affected by development projects.

SESSION 7
Resources

Time: 2 hours

Objective: The Trainee will develop an awareness of the diverse resources available to assist field workers in developing countries.

Overview: An important and major role of the appropriate community technology extensionist is to facilitate technical information and resources. However, it is often difficult to obtain needed support, especially when potentially helpful organizations, books and other resources are unknown to the field worker. Throughout the program, the Trainees have learned about various sources of assistance; in this session, there is an emphasis on specific information concerning the acquisition and use of a variety of resources for technical information, general literature on the development process, health and environmental issues, and funding.

Suggested Resources

Darrow, K. and R. Pam, *Appropriate Technology Sourcebook.*

Appropriate Technologies for Development (handout) and *Non-Peace Corps Publications Available through ICE: An Annotated Bibliography*, both available through Information Collection and Exchange, Peace Corps, Washington, D.C.

"A Bibliography for PCVs Working in Health-related Activities" in *Training Peace Corps Trainees/Volunteers for Health-related Activities: Guidelines for Trainers*, prepared by Africa region, 1978, available through OPTC/Peace Corps. (Handout)

See also *SUGGESTED RESOURCES*, pp. 683-688. (Handout)

Attachment VI-7-E : Appropriate Technology Information and Resource List

Materials Needed: Pens and paper.

Procedure

1. (1 hour 30 minutes) After distributing the handouts and Attachment VI-7-E, the Trainer leads a discussion about the various resources available to Peace Corps Volunteers, and appropriate ways of utilizing them to increase the general information network. Some topics for discussion are:

HOST COUNTRY RESOURCES

- government agencies, offices, and ministries
- libraries
- embassies (for literature and films)
- other voluntary agencies and assistance groups

Previous Page Blank

- other PCVs and staff
- development agencies (UNDP, USAID)

PEACE CORPS, WASHINGTON

- Information Collection and Exchange (ICE)
- ACTION library
- Desk officers

ORGANIZATIONS THAT PROVIDE TECHNICAL ASSISTANCE, including:

- Volunteers in Technical Assistance
- Intermediate Technology Development Group
- League for International Food Education

FILMS AND PERIODICALS

(See resource lists)

HEALTH AND NUTRITION INFORMATION

(See resource lists)

WOMEN IN DEVELOPMENT INFORMATION

(See resource lists)

FUNDING

- Peace Corps Partnership Program
- US AID
- Local resources
- Private Voluntary Organizations
- VITA
- Appropriate Technology International
- International development groups and appropriate technology organizations
- review of proposal writing

NETWORKING

- development and appropriate technology organizations (see
- newsletters and journals
- establishment and maintenance of a Peace Corps Energy Program network.

2. (30 minutes) The Trainees are encouraged to contribute additional resource information, and exchange helpful addresses, names and suggestions. If there are Trainees with specific areas of interest, they may join to review the resource lists and identify organizations, literature and other resources that may be particularly helpful. The session should conclude with a discussion of ways in which the various people can provide each other support while in the field: newsletters, correspondence, up-dates on activities, tapes, etc. The Trainer should emphasize the importance of forming and joining a network of people with like interests, philosophy, and goals.

SESSION 9
Individual Study Time

Time: 2 hours

Objective: See *Session 1* and *11*

Overview: In keeping with the focus on independent study and time for contemplation, the Trainees are provided with the opportunity to work on their role descriptions (see Attachment VI-1-A) and, if desired, to consult with the Trainers.

Resources and Materials: As needed.

Procedure

The Trainees are encouraged to use this time for assigned projects, readings or other activities related to the final preparations for the week.

The Trainers should be available for consultation during this time.

SESSION 11
Assessing the Role of the Peace Corps Volunteer

Time: 2 hours

Objective: The Trainee will prepare a clear, thoughtful and concise description of the role of the appropriate community technology extensionist, as it pertains to the Trainee's individual job and country of assignment.

Overview: In order to gain a better perspective on the potential applications of skills, ideas and technologies learned during training, the Trainees are encouraged to share their perceptions with one another. They discuss their observations concerning the program, their own abilities, future job assignments, and the goals and philosophy that they have developed. Both the written assignment and the continuing discussions provide a forum to facilitate the transition from Trainee to Peace Corps Volunteer.

Suggested Resources

Attachment VI-1-A

Materials Needed: Newsprint and markers.

Procedure

1. (5 minutes) The Trainer presents an overview of the session, and briefly re-states the purpose of the assigned writing.

2. (40 minutes) The Trainees form groups and discuss the questions in Attachment VI-1-A, paying particular attention to the definition of appropriate community technology. Each group is asked to write a composite definition of appropriate community technology as it relates to the role of the Peace Corps Volunteer. The definitions should be printed clearly on newsprint, so that they may be posted during the energy fair (*Session 13*).

3. (15 minutes) The definitions are posted and discussed.

4. (45 minutes) The Trainees share thoughts and observations concerning the role of the Peace Corps Volunteer as facilitator and extensionist. Some points for discussion include:

- The relative importance of integrating health and nutrition, women in development, and global issues with the technical aspects of training, in order to prepare the Trainee for overseas development work

- The interpretations and meanings of the words "extensionist" and "facilitator"

Previous Page Blank

- A review and possible modification of the term "basic human needs", in relation to the role of appropriate community technologies in meeting those requirements.

5. (15 minutes) The Trainer highlights and summarizes the session, and asks for any comments concerning the written assignment. The papers are collected for later evaluation. Before the Trainees leave the site, there should be an opportunity to individually discuss the assignment with members of the Training staff, and the papers (or copies) should be made available to the Trainees.

SESSION 12
Preparation for the Energy Fair

Time: 6 hours

Objective: The Trainee will actively participate in the planning and coordination of a community festival/energy fair.

Overview: A community gathering is the last major activity of training, and is a culmination of the experiential learning that has characterized the program. The Trainees plan an energy fair and community meal, based on the theme of renewable energy applications, and begin preparations for the day's activities.

Suggested Resources

Attachment VI-12-F : Guidelines for the Health and Nutrition Final Practice

Attachment VI-1-A : Demonstration Guidelines

Procedure

1. (15 minutes) The Trainer presents an outline of the next day's activities, and reviews and posts the sign-up sheets and guidelines for the meal preparation (Attachment VI-12-F). The following brief talk may be given as an introduction to the community gathering:

> Festivals and fairs have always been important to community life. They provide a traditional time for people to gather, share experiences, enjoy the company of friends and family, and learn about new happenings and innovations. Especially in developing countries, the importance of community gatherings is apparent; festivals often serve as the focus of community activity for days, or months. During overseas service, many people find that celebrations surrounding the harvest, or other commemorative occasions leave long-lasting and fond memories. The community energy fair that will take place is a good opportunity to enjoy and learn from one another, to meet with friends, and share new ideas and information, and is a good way of making a transition from one community to another.

2. (5 hour 45 minutes) The Trainees organize and plan the activities, using the following guidelines for the energy fair:

- All Trainees should participate fully in the food preparation and demonstration of devices, and be responsible for food, fuel and water supplies, and any other necessary materials.

- There should be an emphasis on the integration of the themes presented during training, including: implications for health, the participation of all community members, the concepts of adult learning, global energy and development issues, technical information, and appropriate communication and extension skills.

- There should be a comparison of the various devices.

- Information should be available to guests and community members.

- Music and games should be an integral part of the festival.

- A schedule of events should be developed and made available.

The Training staff should be available to guide and consult with the Trainees. It is recommended that groups or committees be formed to work on specific areas, such as: setting-up the demonstration and eating areas, coordinating the activities and demonstrations, etc.

It is important that the Training staff facilitate organization of the activities and preparations, but it is equally important that the Trainees have the opportunity to be responsible for all aspects of the festival.

Note: During preparation time, some final evaluations and interviews may be scheduled. The others may occur on the last day of training.

SESSION 13
Energy Fair

Time: 8 hours

Objective: The Trainee will competently use and demonstrate each device built during the training program, emphasizing the potentially appropriate applications to interested observers; and will actively participate in the preparation of a meal, utilizing food that has been preserved, processed, or prepared in accordance with the criteria of appropriate use of energy, cultural and economic viability, taste, and retention of nutritional value.

Overview: The energy fair provides a festival atmosphere for creative demonstration of the various devices, in ways that show their potential for use in developing countries. The entire training community and invited guests participate in the day's activities, which include a meal, followed by presentations, games, music and other activities planned by the Trainees.

Resources and Materials: As needed.

Procedure

A possible schedule of events for the day's activities follows. However, it should be adapted to suit the needs and capabilities of the individual program and site, and in accordance with the creativity of the participants.

1 hour -- gather materials and supplies

2½ hours -- prepare the meal

1-2 hours -- eat and socialize, do a preliminary clean-up

2½ hours -- presentation of skits, games, songs, puppet shows, and demonstration of the individual devices

1 hour -- clean up

SESSION 14
Evaluation and Clean-up

Time: 4 hours

Overview: The last hours of training are likely to be filled with final details and activities. However, there should be time allotted to clean and organize the training site, store tools and materials, and, if necessary, dismantle or store the devices built during the program. If final interviews and evaluations have not been completed, time should be provided during this last session.

A note on Evaluations:

It is recommended that the final evaluations take the form of a personal interview, in order to review the Trainee's progress and skill level in all areas of the program. Although a written evaluation (by the Trainee) is desirable, time constraints may limit a long assessment. If feasible, the mid-program evaluation (pp. 383-384) may be used.

Previous Page Blank

P H A S E VI : ATTACHMENTS

VI-1-A	:	The Role of the Appropriate Technology Extensionist: Transition to Peace Corps Service
VI-1-B	:	Demonstration Guidelines
VI-5-C	:	Project Assessment Checklist
VI-5-D	:	Women in Development: Defining An Approach
VI-7-E	:	Appropriate Technology Information and Resource List
VI-12-F	:	Guidelines for Final Practice in Nutrition and Health

Previous Page Blank

Attachment VI-1-A

THE ROLE OF THE APPROPRIATE COMMUNITY TECHNOLOGY EXTENSIONIST:
A TRANSITION TO PEACE CORPS SERVICE

Please present a clear, thoughtful, and concise description of your perceptions concerning your role as a Peace Corps Volunteer. Include the following points for consideration:

- Your definition of appropriate community technology.
- Your understanding of the job or project to which you have been assigned.
- The manner in which you have been prepared by this training program.
- An honest appraisal of your skills in physical, cognitive and social areas.
- The limitations you perceive in your abilities, and in the potential job situation.
- The ways in which health and nutrition training may facilitate your role as a PCV, and as an appropriate community technology extensionist.
- Methods you will consider in order to encourage the active participation and inclusion of all community members affected by your project.
- How your job or project may contribute to improving the quality of life of the people affected.
- Methods you plan to use for effective community involvement in the application of technologies and devices.

The description should be prepared carefully, and should reflect your philosophy and current perspective on training and Peace Corps service. A copy of your paper will be given to you to take with you; it will be interesting to review it, and compare it with your realities and job situation a year from now!

Previous Page Blank

From: CHP/Guatemala

DEMONSTRATION GUIDELINES

PURPOSE

It is very important that you have clearly in your mind the exact purpose of your demonstration. If your purpose is not clear to you, you will not be able to communicate it clearly to someone else.

The first thing you must consider in giving a demonstration is your audience. The following is a list of questions which should be considered when planning a demonstration.

1. How large is your audience?
2. Is there an optimum size?
3. What is the audience interest?
4. What is the audience age?
5. What is the audience's level of education?
6. How much does the audience know about the subject?

Key points:

7. If subject of demonstration is new to the audience, can it be related to some experience or subject common to all?
8. Does implementing demonstration techniques involve financial or emotional risk to members of the audience?

PLANNING

Secondly, you should plan the procedure step by step to eliminate confusion, keep things moving smoothly, assure correct results, and most important of all, to *know your subject matter*.

1. Your should limit the scope of the demonstration, so that it covers only one subject, can be covered well, and not so long as to lose the attention of the audience.

2. If the demonstration is part of a series of demonstrations necessary to convey a complete idea, try to include a minimum of material connecting it to succeeding demonstrations.

3. Be sure you have all the materials and implements necessary to do the demonstration. Do not rely on people to bring a necessary implement or material when they come to the demonstration; have it ready beforehand.

4. Will the villager have all the tools and materials necessary to implement what you have demonstrated? If not, can you help to obtain them?

Previous Page Blank

5. Be sure you can handle the tools necessary for the demonstration sufficiently well to be credible.

6. How much work is needed to adequately demonstrate the process?

7. Know all technical terms necessary for the demonstration.

8. If the demonstration is new to you, do it by yourself once to be sure of steps, problems, etc.

9. Think about ways to reinforce learning (i.e., will it be necessary to work with each person who attended the demonstration on an individual basis? A repeat demonstration?)

10. Think of ways to get people to come (for example, send word with school children, individual home visits, community notice).

11. You may want to keep a list of persons who attended the demonstration; one, to help remember who will need a follow-up visit, and two, if you are giving a series of demonstrations, who missed which demonstration.

VISUAL AIDS

Visual aids can play an imprtant part in a demonstration. A visual aid need not be a drawing ; it can be a model, a finished product, a picture, or a photo. Any visual aid used should be an integral part of the demonstration and not something which will be distracting in itself. The following are some questions to be considered when developing visual aids for a demonstration (since the meaning of visual aids may differ from what you intend, to what villagers understand in their culture):

1. Does the demonstration require visual aids?
2. Can something else be used more effectively?
3. Do the aids need to be drawn?
4. Should they be drawn before or during the demonstration?
5. Is the audience acquainted with visual aids?
6. Is it simple enough to be understood?
7. Are you sure your picture conveys the message you intend in a cross-cultural situation?

DEMONSTRATION

If the demonstration has been carefully planned, the actual demonstration should go well.

1. Begin with a simple introduction, thanking the people for coming, particularly any community leader(s) present.

2. You may want to start the demonstration by getting the audience into a *directed* discussion which will lead to the realization

of the need for or usefulness of that project, method, or process which you are about to demonstrate. Or, if the underlying need or purpose is understood, a simple statement of the object of the demonstration should be given.

3. Explain preliminary layout of materials, tools, etc.

4. Work through steps according to your plan, explaining each step as you go. This is particularly important when the steps have a specific order.

5. Have visual aids at hand so there will be no interruption while going to get them, or taking audience to a room to use the blackboard.

6. Ask if there are any questions after each step.

7. When you are finished, summarize the procedure.

8. Offer to help those willing to try what you have demonstrated. Set a specific date for individual help if the person shows sufficient interest.

9. Thank people again for attending the demonstration.

A good demonstration consists of a well-defined purpose and a well thought out plan, taking into consideration audience needs, interests, abilities, and age. Careful use of visual aids can make the conveying of an idea much easier and clearer, and a good plan makes things run smoother.

Attachment VI-5-C

Adapted from: *WID: A Volunteer Training Resource Book*

PROJECT ASSESSMENT CHECKLIST

Instructions (Part A):

The eleven (11) statements below represent a partial list of indicators to assess whether or not, and to what extent, women have been adequately considered in your project. Some indicators may not be relevant or discernible. Others may need to be added. Given the information you've read and/or heard, go over the list and place a check (✓) in those brackets which clearly or apparently apply.

1. Women were involved in the preparation of the project:
   ( ) Consulted (by Staff/PVO/Agency Rep.)
   ( ) Visited on site (by Staff/PVO/Agency Rep.)
   ( ) Included in community/agency negotiations.

2. Volunteers will work with women:
   ( ) In community
   ( ) In Agency

3. Project objectives ( ) or narrative ( ) indicate that working with women is expected.

4. Job description specifies ( ) or implies ( ) the volunteer will work with women.

5. Project objectives specify ( ) or imply ( ) that women will be affected positively.

6. Project objectives imply that women will be affected negatively.

7. Project objectives or narrative specify ( ), imply ( ) that only men will be worked with.

8. Project narrative specifies ( ) or implies ( ) that women are among intended beneficiaries.

9. Site information:
   ( ) Makes reference to women
   ( ) Talks only of men
   ( ) Implies their involvement

Previous Page Blank

10. From the project description ( ), job description ( ), and site information ( ) it can be deduced ( ) or assumed ( ) that indirect benefits will accrue to women.

11. From the project description ( ), job description ( ), and site information ( ) it can be deduced ( ) or assumed ( ) that indirect harm will impact women.

Instructions (Part B):

The following list of indicators attempts to stimulate analysis and thinking about whether a project has positive and/or negative impact on women. Very occasionally the impact is clear or anticipated. Most often the impact is unclear and unanticipated. From what you have read or heard, check (✓) whether or not impact may be positive or negative (or both) for as many indicators as possible. Also feel free to add any indicators you believe relevant since this list was not intended to be exhaustive or relevant to every country or program in all its aspects.

The impact on women for this project will or may be demonstrated by:

POSITIVE	INDICATOR	NEGATIVE
	Personal income increase	
	Family income increase	
	More leisure time	
	New skill development	
	Better sanitation	
	New knowledge/awareness	
	New behaviors	
	More food	
	Better quality food	
	Better personal health	
	Better family health	
	More access to information	
	More choices on how to spend time	
	More participation in decision-making	
	More access to education	
	Better housing	
	Full employment	

From: *WID: A Volunteer Training Resource Book*

Women in Development: Defining an Approach

Judith A. Hermanson

The phrase "women in development" is fairly new to the vocabulary of the development community. However, it is a phrase that, together with its acronym "wid," is much bandied about. This has its advantages and its disadvantages. On the one hand, the phrase at least surfaces the issue of women's participation in the development process. On the other hand, it shares with other catch phrases the problem of being ill-defined.

"Women in development" is not the only phrase used in the development community that could benefit from better definition. Which two people, for instance, have the same understanding of what the phrases "the poorest of the poor," "appropriate technology" and "basic human needs" mean? The catch phrase tends to oversimplify and as a result, sometimes to communicate different ideas to different people. With "women in development," however, there is another difficulty as well. Often people interpret it in light of some of their own basic assumptions about women's roles and so their ideas about it tend to be emotionally laden.

Judith Hermanson was Project Director for the New TransCentury Foundation's women in development project for Peace Corps. She is Executive Vice President of the woman-owned, policy research company, the Newman and Hermanson Company.

Nonetheless, beyond the catch phrase "women in development" lies a concept that may be critical to the nature of development in the Third World. This paper is an attempt to net some of the complexities that it contains and to provide an expanded sense of what "women in development" might mean for Peace Corps.

Why should we be concerned with women in particular?" One might ask. And with reason. The response is that in attempting to define women in development, the stress must be placed on "in development." We have begun to find that to assume that women are "being taken care of" in the course of development in general is not a safe assumption to make. It is not necessarily true that women will advance as their countries advance. Indeed, there are documented examples of well intentioned development projects that have impacted negatively on the position of women within a particular culture.[1/] Women have sometimes been robbed of status, secure social positions and economic opportunities as a result of such projects. For instance, in many countries in Africa, where women have traditionally done much of the agricultural work, development projects introducing mechanization and cash crops have usually ignored women's role. The consequence in such cases is that women have been barred from the economic opportunities that by practice belong to them.

1/ See for example Irene Tinker, "The Adverse Impact of Development on Women," Women and World Development, ed. Irene Tinker and Michele Bo Bramsen (Overseas Development Council, Washington, D.C.: 1976), pp. 22-34.

With regard to their own positions in their societies, they have lost standing vis à vis the position that they once held. The emphasis of development projects on men's roles, with women left, for the most part, in their traditional roles — at least, what are traditional roles in the eyes of planners with Western orientations, who assume that women in subsistence societies play the same types of roles as middle class Western women — holds the potential for social dislocation. As the gap between traditional ways and new ways comes to be demarcated in terms of sex roles, women will remain in the subsistence economy, while men participate in the income-producing, technologically-based economy that is the legacy of development. The clearly defined and mutually supportive male and female roles of the traditional culture will no longer apply and there will be a schism between the sexes. Clearly, the implications for development are great: when there are no common points of reference within a society there is inherent instability. For such a serious reason, Peace Corps as well as other development planners have an obligation to focus attention on women.

All of this is said, however, we recognize that in talking about women in development programs, the program planner encounters at least two possible dangers of being misunderstood. These dangers are:

- that such programs will be conceived of as an offshoot of "Women's Lib" and not applicable to or wanted by women in traditional societies;

- that such programs will be conceived of as a fad, subject to the fashions or politics of the time, and not a serious development effort.

If women in development programs are perceived in either or both of these ways by host country officials, Peace Corps staff, or Peace Corps Volunteers, efforts to consider carefully the roles of women and to develop programs that would benefit them will yield nothing. In fact, they may even have negative repercussions. However, if women in development is placed within its proper context, it becomes clear that what is being talked about is not another form of cultural imperialism or a frivolous concern. Neither is it divorced from general development efforts. In this context, it becomes clear that these efforts are, in fact, central to the development goals of host countries and to Peace Corps programming philosophy.

For Peace Corps in particular, it would seem that addressing the problems and examining the potentials of women within a particular culture that is itself coping with change are truly congruent with its mission. Certainly, they would coincide with a programming philosophy concerned with basic human needs. Women are the nurturers in almost all societies and so have a large responsibility for the next generation; women are often the providers of food and water for their families and so directly affect their physical well-being; women are often those in a society that have the least access to power (economic or political) and so

have the least possibility of shaping their own lives; women are those among the "have nots" who have most frequently been left behind in the development process. Viewed in this light, women in development programs assume an undeniable centrality to the development process as a whole and to Peace Corps programming efforts in particular.

Attention should be paid both to the adverse consequences that may have occurred as the result of development and to the potential benefits that may occur when women are full participants in the process. The question of how to go about formulating women in development programs, however, poses another set of problems. It is important to stress here that it is not possible to focus on women in development without also understanding "men in development." Both men and women have roles to play and it is critical to consider the society holistically, even when focusing on a particular aspect. Within this general context, there are basically three kinds of programs:

- those that are focused specifically on the needs of women;
- those that are more generally focused, but that have a component that focuses on the need of women; and
- those that do not focus on the needs specific to women but that address women and men equally, while yet enhancing women's position.

Programs that do not fall into these categories may also have implications for women, of course, and they should be looked at for their neutrality, to ensure that they do not adversely affect women.

In order to develop programs that will benefit women, there are obstacles. For instance, much has been written about the lack of information about the role of women. How can a project be developed if we do not know what women do? That is a valid question, of course, because such a lack has implications for the soundness of any women in development programs that are developed. Without information it may be difficult, in many instances, to ascertain whether a planned program is correctly focused. However, a belief that there is inadequate data should not serve as a reason not to attempt women in development programming.

First, today's inadequate data is quite different from yesterday's; there is, in fact, much more information about the role of women in various countries than there was even five years ago. For the aware and interested program planner, much information already exists. Often it is a simple matter of asking the question. The program planner should beware also of the "inadequate information cop-out." Is the data standard being imposed on a women in development project higher than that imposed on projects of other types? It should not be. Further, much of the information necessary for Peace Corps project planning should be gained during the programming process, as a routine matter. There are a

variety of checks that can be built into the programming process that will help to ensure the effectiveness of programming. With attention focused on women, questions that arise in any sound programming process will provide these checks.

The following checklist of questions will provide the program planner with a practical tool to assess the feasibility and the potential impact of the project itself. 1/ This checklist can be used on any level, but has been designed for use primarily at the local or village level. The sources of the information should be the women themselves, as well as the existing power structures -- eg., village governments, local representatives of central governments, and provincial governments. This checklist follows:

Checklist

- What problems that women have will this program address? Have women participated in their definition? (Direct participation is a primary concern and provides a reasonably reliable check on the process.)

1/ In addition, there exist several different Guidelines that have been developed by various organizations for the purposes of their own women in development programming. Among those are the United Nations Development Programme, Guidelines on the Integration of Women in Agricultural and Rural Development Projects, which gives rather specific questions that should be addressed in the course of developing women in development programs in these sectors; and the Criteria for Evaluation of Development Projects Involving Women developed by the Subcommittee on Development Assistance, American Service, Inc. (ACVAFS), which poses general questions to serve as check points for the assessment of women in development projects that are already in place.

- How will it address them? Will these means be acceptable to the women? To their husbands? To others in the community? How can you tell?

- Is it reasonable to expect that women will be able to participate in the program as structured? Does it conflict with other duties? Do they have enough time? Are they interested? How can you tell?

- Are there any short-term pay-offs or indicators of success? Will the women be able to see the usefulness of the activity? Have they had any previous exeprience with similar activities? What was the nature of that experience?

- What is the relationship of the project to other institutions? Are there competing projects? What is the role of women in the management/implementation? Can they play a large part?

- What is the likely impact of the project, if it achieves its goals, on the structure of the women's lives? On the structure of the lives of community? (By attempting to make such as analysis, you should try to anticipate any possible negative impacts).

- Will it raise the status of women? Will it integrate them into the development process? By

providing them with cash? By shoring up their traditional sources of authority? By providing new opportunities?

For Peace Corps these questions must, of course, be asked within the larger context of the Peace Corps program criteria and the Country Management Plan of the particular country. For other planners, it must be used within the context of their own program guidelines.

In addition to being used in the programming of new women in development programs, this checklist can also serve as a useful tool in assessing and perhaps in redirecting existing programs. Certainly, it would be desirable to ascertain that existing programs are not having any adverse effects on women.

In the course of developing and redirecting programs to address women in development issues, program planners should work in a variety of sectors. Women in development means projects in the "nontraditional" and "traditional" areas. It means work in food production as well as nutrition; in economic development as well as family planning; in water supply as well as health. If program planners turn their attention to "women in development programs" what will emerge is a multisectoral array of activities — and for Peace Corps, activities involving both men and women Volunteers — that spans the spectrum of development projects.

Attachment VI-7-E

APPROPRIATE TECHNOLOGY

Information and Resource List

Information Collection & Exchange
Office of Multilateral and Special Programs
ACTION/Peace Corps
806 Connecticut Ave. N.W.
Washington, D.C. 20525
(for program and training journals, & a.t. information)

Farallones Institute Rural Center
15290 Coleman Valley Rd.
Occidental, CA 95465

Farallones Institute Urban House
1516 5th St.
Berkeley, CA 94710
(plans, drawings, publications, info)

Aprovecho Institute
359 Polk St.
Eugene, OR 97402
503-929-6925

Community Environmental Council
924 Anacapa St. Suite B4
Santa Barbara, CA 93101
(drawings, publications, & info)

Institute for Local Self-Reliance
1717 18th St. N.W.
Washington, D.C. 20009
(charts, drawings, publications, info)

State of California Office of Appropriate Technology
1623 10th St.
Sacramento, CA 95814
916-445-1803

New Alchemy Institute
Box 432
Woodshole, MA 02543
(info & monthly journal)

Appropriate Technology International
1709 N St. N.W.
Washington, D.C. 20036
202-293-9270)
(funding & info for 3rd world groups)

Hesperian Foundation
P.O. Box 1692
Palo Alto, CA 94302
415-327-4576
(health & self-help info)

INFORMATION WITH PUBLICATIONS
(Newsletters & books)

Volunteers in Technical Assistance
3706 Rhode Island Ave.
Mt. Rainier, MD 20822
(monthly newsletter, technical assistance service, & Vita Village Technology Handbook in Spanish & English)

Appropriate Technology Project
Volunteers in Asia
Box 4543
Stanford, CA 94305
(excellent Appropriate Technology Sourcebook to get you to what you are looking for)

Intermediate Technology Development Group
9 King St.
London WCQE 8HN
England
(quarterly Journal of Appropriate Technology - if you only have one to subscribe to, this is it! and publications list on everything you can imagine)

International Association for the Advancement of Appropriate Technologies for Developing Countries
University of Michigan
603 East Madison
Ann Arbor, MI 48109 (313) 764-6410
(monthly journal called Approtech)

Transnational Network for Appropriate Technologies (TRANET)
P.O. Box 567
Rangeley, ME 04970
(excellent networking & ideas-oriented newsletter)

Information with Publictions, continued.

Vecinos Mundiales/World Neighbors
5116 North Porland Avenue
Oklahoma City, OK 73112
(quarterly magazine in both Spanish & English; excellent for material on work you might do in community development)

Brace Research Institute
McDonald College of McGill University
Ste. Anne de Bellevue, P.Q.
HOA ICO Canada
(lots of technical information)

Canadian Hunger Foundation
75 Sparks St.
Ottawa, Ontario
KIP 5A5 Canada
(last two groups have jointly published A Handbook in Appropriate Technology)

Technica \ssistance Information Clearinghouse
(TAICH
200 Park e. South
New Yo.k, NY 10002
(aewsletter on world issues)

Whole Earth Truck Store
558 Santa Cruz Ave.
Menio Park, CA 94025
(bibliography list & mail order of anything, almost!)

GUIDELINES FOR FINAL PRACTICE IN NUTRITION AND HEALTH

The last exercise in the Nutrition/Health component of training is to plan and prepare a meal that uses the skills, knowledge, and perceptions that surround and comprise the philosophy of appropriate technology. Remember that when planning and implementing the different phases of the meal, a low-tech approach should be tried (no blender, electrical devices, and appliances), and that wherever possible, appropriate technology devices, technologies and solutions should be incorporated. Our aim is to prepare a nutritionally-balanced and healthy meal that tastes and looks appetizing; as important is the aim to work cooperatively so that all group members participate actively and fully.

Sign-up sheets are provided for the following tasks: Soup, salad/vegetables, bread/tortillas, beans/grain, desserts. A clean-up list is also provided; everyone must sign up for a clean-up or a set-up taks. The cooking tasks are as follows:

SOUP

Prepare a soup or stew based on a grain/legume/vegetable combination in enought quantity to serve approximately 45 people (the Farallones community and the Training community), using the following guidelines:

- Harvest food (vegetables and herbs) from the garden
- Grind any legume/grain base on pedal-powered devices
- Cook the soup on the Lorena or wood stoves, or in a fireless cooker
- Use a pressure cooker for at least part of the preparation

Four people are needed for this task. Consultants will be available from the Training Staff.

SALAD/VEGETABLES

Prepare a salad and cooked vegetables (including greens), for approximately 45 people, using foods from the garden and within the following guidelines:

- Harvest greens/vegetables carefully and under the guidance of a Farallones gardener
- Use fresh herbs instead of dried ones whenever possible
- Create a salad dressing and/or sauce that minimizes the use of "prestige" foods, perferably with none at all.
- Cook at least part of the vegetables on the Lorena, wood, or fireless stove/cookers.

Four people are needed for this task. Consultants will be available from the Training Staff.

BEANS/GRAIN

Prepare a main dish (or more than one) using a legume/grain base and following these guidelines:

- Use a pressure cooker for some of the cooking process
- Maximize the protein value of the dish by combining foods
- Grind a portion of the food on pedal-powered devices
- Cook the food on the Lorena, wood, or fireless cookers

Four people are needed for this task. Consultants will be available from the Training Staff.

BREAD/TORTILLAS

Bake at least four loaves of whole wheat or combination grain/soy bread; or make 4 dozen tortillas, using the following guidelines:

- Grind the flour using pedal power devices
- Bake the bread in the wood, Lorena, or solar ovens
- Set the dough to rise somewhere warmed by the sun or wood fire
- Grind corn for tortillas (after using ash water to remove hulls)

Four people are needed for this task. Consultants will be available from the Training Staff.

DESSERTS

Prepare enough desserts for approximately 45 people, using foods that are locally grown or available for the part of the dessert; all food used should be fairly low-cost. Follow these guidelines:

- Grind the flour used on a pedal-powered device
- Keep the use of "prestige" foods to a minimum
- Bake the dessert (where applicable) in the wood, Lorena, or fireless stove/cookers
- Make a whipped topping, using the pedal powered device
- Try to use locally-produced foodstuffs: honey, cream, butter (limited), nuts and seeds, canned fruits.

Four people are needed for this task. Consultants will be available from the Training Staff.

SUGGESTED RESOURCES

The following publications are recommended as resources for the implementation of the present training module. The list is categorized according to the area of primary use, although a number of publications serve a variety of purposes. As much as possible, it is suggested that the following books and articles be made available to both staff and trainees; many of the resources may be obtained through the Information Collection Exchange (ICE), Peace Corps, Washington.

Materials that are marked with an asterisk (*) are recommended as texts.

EDUCATIONAL RESOURCES

INGALLS, J.
1973 A Trainer's Guide to Andragogy: Its Concepts, Experience, and Application, revised edition. Washington, D.C.: U.S. Government Printing Office.

PFEIFFER, J.W. and J.E. JONES, editors
1970 A Handbook of Structured Experiences for Human Relations Training. La Jolla:University Associates Press.

THE ROLE OF THE VOLUNTEER IN DEVELOPMENT

* DARROW, K. and R. PAM
1978 Appropriate Technology Sourcebook. Stanford: Volunteers in Asia.

* DARROW, K. and B. PALMQUIST, editors
1977 Transcultural Study Guide, second edition. Stanford: Volunteers in Asia.

de MOLL, L. and G. COE, editors
1978 Stepping Stones: Appropriate Technology and Beyond. New York: Schocken Books.

ECKHOLM, E.
1976 Losing Ground. Washington, D.C.: Worldwatch Institute.

FARALLONES INSTITUTE
1979 The Integral Urban House. San Francisco: Sierra Club Books.

FOSTER, G.
1973 Traditional Societies and Technological Change, 2nd edition. New York: Harper & Row.

FUGELSANG, A.
1977 Applied Communication in Developing Countries. Uppsala, Sweden: Dag Hammerskjold Foundation.

1977 Doing Things Together: Report on an Experience in Community Appropriate Technology. Uppsala, Sweden: Dag Hammerskjold Foundation.

JEQUIER, N.
1979 Appropriate Technology Directory. Paris: Development Centre of the Organization for Economic Co-operation and Development.

1973 Appropriate Technology: Problems and Promises. Stanford: Volunteers in Asia

PADDOCK, W. and E. PADDOCK
1973 We Don't Know How: An Independent Audit of What They Call Success in Foreign Assistance. Iowa State University Press.

REDDY, A. K.
1979 Technology, Development, and the Environment: A Re-appraisal. Nairobi, Kenya: United Nations Environmental Programme.

SCHUMACHER, E. F.
1973 Small is Beautiful: Economics as if People Mattered. New York: Harper & Row.

VOLUNTEERS IN TECHNICAL ASSISTANCE
1978 Village Technology Handbook. Mt. Rainier, MD: VITA.

WARPEHA, P.
1979 Perceptions of Technology: A Study of the Iluman Project. Washington, D.C.: National Technical Information Service.

WOMEN IN DEVELOPMENT

ACTION/PEACE CORPS
1977 Articles on Women in Development. Program and Training Journal, Vol. IV, No. 6. Washington, D.C.: Action/Peace Corps.

BOSERUP, E. and C. LILJENCRANTZ
1975 Integration of Women in Development. New York: United Nations Development Program.

BUVINIC, MAYRA
1976 Women and World Development: An Annotated Bibliography. Washington, D.C.: Overseas Development Council.

DULANSEY, M.
1977 Women in Development: A Training Module. Washington, D.C.: Consultants in Development.

HUSTON, P.
1979 Third World Women Speak Out. Washington, D.C.: Overseas Development Council, and New York: Praeger Publishers.

INTERNATIONAL WOMEN'S TRIBUNE CENTER
Newsletter on international issues of women. New York: IWTC.

NEWLAND, K.
1979 The Sisterhood of Man. Washington, D.C.: Worldwatch Institute, and New York: W.W. Norton Co.

NEW TRANSCENTURY FOUNDATION
1979 Women in Development: A Volunteer Training Resource Book. Washington, D.C.: Action/Peace Corps.

O'KELLEY, E.
1978 Rural Women: Their Integration in Development Programmes and How Simple Intermediate Technologies Can Help Them. Obtained from the author, 3 Cumberland Gardens, London WCI X9AF, England.

1977 Simple Technologies for Rural Women in Bangladesh. Dacca, Bangladesh: UNICEF.

RIHANI, M.
1978 Development as if Women Mattered: An Annotated Bibliography with a Third World Focus. Washington, D.C. : New Transcentury Foundation.

TINKER, I. and M. BRAMSON
1976 Women and World Development. Washington, D.C.: Overseas Development Council.

HEALTH AND NUTRITION

BOSTON WOMEN'S HEALTH BOOK COLLECTIVE
1979 Our Bodies, Our Selves: A Book by and for Women. New York: Simon & Schuster.

BROWNLEE, A.
1978 Community, Culture and Care. Saint Louis, MO: C.V. Mosby Co.

ECKHOLM, E.
1977 The Picture of Health: Environmental Sources of Disease. New York: W.W. Norton & Co., Inc.

GOLDMAN, L.
1979 Perspectives of Balance: A Study of Health Traditions in Iluman, Ecuador. Washington, D.C.: National Technical Information Service.

GUSSOW, J., editor
1978 The Feeding Web: Issues in Nutritional Ecology. Palo Alto, CA: Bull Publishing Co.

JELLIFFE, D.
1969 Child Nutrition in Developing Countries. Washington, D.C. : US AID.

KATZ, D. and M. GOODWIN
1976 Food: Where Nutrition, Politics, and Culture Meet. Washington, D.C. : Center for Science in the Public Interest.

LAPPE, F. M. and J. COLLINS
1977 Food First. New York: Ballantine Books.

LAPPE, F. M.
1975 Diet for a Small Planet. New York: Ballantine Books.

PACEY, A.
1978 Gardening for Better Nutrition. London: Intermediate Technology Publications.

ROBERTSON, L., C. FLINDERS, and G. BRONWEN
1976 Laurel's Kitchen. Berkeley: Nilgiri Press.

SAMUELS, M. and H. BENNET
1973 The Well Body Book. New York: Random House.

WERNER, D.
1977 Where There is No Doctor. Palo Alto: The Hesperian Foundation.

MUD CONSTRUCTION

EVANS, I.
1979 Lorena Owner-Built Stoves. Stanford: Volunteers in Asia.

MACKEY, J.T.
1980 Adobe as a Socially Appropriate Technology for the Southwest. Washington, D.C. : U.S. Department of Housing and Urban Development.

RAJU, S. P.
1961 Smokeless Kitchens for the Millions. Bangalore, India: Christian Literature Society.

PEDAL POWER

CONGDON, R. J.
1977 Introduction to Appropriate Technology. Emmaus, PA : Rodale Press.

McCULLAGH, J., editor
1977 Pedal Power. Emmaus, PA: Rodale Press.

SOLAR ENERGY

ANDERSON, B.
1976 The Solar Home Book. Harrisville, N.H.: Cheshire Books.

BAER, S.
1977 Sunspots. Albuquerque, N.M.: Zomeworks Corporation.

1976 Breadbox and Pro Solar Water Heater Plans. Ibid.

BAINBRIDGE, D.
1979 Passive Solar Water Heating: First Passive Solar Catalog. Davis, CA: Passive Solar Institute.

BRAINBRIDGE, D. and J. REISS
1978 Breadbox Designs. Alternative Sources of Energy magazine, October.

BENNET, R.
1978 Sun Angles for Design. Bala Cynweid, PA: R. Bennett.

BURTON, J.
1979 Passive Solar Water Heater Plans. Santa Rosa, CA: Integral Design. (3825 Sebastopol Rd.)

MAZRIA, E.
1979 The Passive Solar Energy Book. Emmaus, PA: Rodale Press.

OLGYAY, V.
1963 Design with Climate. Princeton, N.Y.: Princeton University Press.

SOLAR DRYERS

BRACE RESEARCH INSTITUTE
1975 A Survey of Solar Agricultural Dryers. Quebec, Canada: Brace Research Institute.

LINDBLAD, C. and L. DRUBEN
1976 Small Farm Grain Storage. Mt. Rainier, MD: Volunteers in Technical Assistance.

LAWAND, T. A.
1977 The Potential of Solar Agricultural Dryers in Developing Areas. Quebec, Canada: Brace Research Institute (Presented to UNIDO Conference, Vienna, Austria, Feb. 1977).

MINISTRY OF ENERGY OF THE PHILIPPINES
1979 Proceeding of the Solar Drying Workshop. Fort Bonifacio, Makati, Metro Manila, Philippines: Ministry of Energy.

NEWSLETTERS/JOURNALS

APPROTECH Journal of the Association for the Advancement of Appropriate Technology for Developing Countries. Ann Arbor, Michigan.

JOURNAL OF APPROPRIATE TECHNOLOGY
Intermediate Technology Development Group. London, England.

RAIN Journal of Appropriate Technology. Portland, OR.

TRANSNATIONAL NETWORK FOR APPROPRIATE/ALTERNATIVE TECHNOLOGIES
Rangeley, Maine.

VOLUNTEERS IN TECHNICAL ASSISTANCE NEWS
Mt. Rainier, MD.