PN-AAP-564

Prepared by the Small Decentralized Hydropower (SDH) Program of the National Rural Electric Cooperative Association, 1800 Massachusetts Avenue, N.W., Washington, D.C. 20036 (202) 857-9622, under Cooperative Agreement AID/DSAN-CA-0226.

END USE OF SMALL-SCALE ENERGY SYSTEMS IN RURAL AREAS

PAUL J. CLARK, DANIEL J. BOYLE, AND KAREN M. DAVIS

National Rural Electric Cooperative Association
International Programs Division
1800 Massachusetts Avenue N.W.
Washington, D.C. 20036, U.S.A.

ABSTRACT

The development of remote small-scale energy systems such as small decentralized hydropower offers a unique opportunity for pursuit of a decentralized approach to economic development. This paper presents a general overview of energy needs and consumption patterns in rural areas, the nature of the energy output of small hydropower systems, and how that output can be used most productively. In the broadest sense, "productive uses" of energy are those uses which increase or enhance production in agricultural, industrial, commercial, and home industry activities. This in turn enhances the economy of small-scale schemes through higher load factors and increased income generation. Opportunities to increase productive use of small power generating stations are explored as well as the constraints to proliferation of productive uses in rural areas and the complementary programs required to overcome those constraints.

KEYWORDS

energy decentralization; end-uses; productive uses; rural development; small hydropower

INTRODUCTION

Since the oil crisis of 1973, the dogma which claimed that per capita GNP was inextricably related to per capita energy consumption has been exposed as untenable.[1] "State-of-the-art" development theory encourages instead "decentralized" production centers, requiring less energy for transportation and distribution of goods and services. Through the decentralization of the various productive components of a nation's economy, it is argued that higher living standards can be achieved without the high per capita energy consumption levels characteristic of the industrialized countries.

In the resulting rush to develop small, decentralized, and renewable energy resources, frequently overlooked is what uses these energy systems will serve, and how they will fit in the overall rural sector development plan. Despite the enormous economic pressures which recent energy shortages have placed on rural sectors worldwide, energy supply is not in fact an economic end in itself. Rural development policymakers increasingly tend to regard energy resource development as a primary program objective, yet energy supply as a rural development project goal is only a means: a means for increased convenience, productivity, production, employment, income, or leisure time. This is true whether energy is supplied by centralized means or from decentralized sources. Thus, attention must be given to the uses of the energy, as well as to associated capital and institutional investments that are required to ensure the efficient use of the energy.

[1] In a recent writing on this topic, Reddy (1978) points out that if India were to adopt U.S. energy consumption practices it would require about three times the current total energy consumption rate of the U.S., or 150 times the present production of commercial energy in India.

In rural areas, energy demand may come from four sectors: (1) agriculture, including both the production and processing of agricultural goods; (2) industry and commerce, including small- and medium-scale industrial plants, cottage industries, and commercial activities; (3) public utility services, principally electricity for municipal lighting, water supply, and health care; and (4) the household sector, including uses for cooking, heating, home lighting, and household appliances. Energy may also be used to produce secondary energy resources, particularly when primary energy supply, such as with hydropower, is controlled by seasonal variations (Roorkee, 1982).[2]

The primary means of energy distribution used to serve these many diverse functions is electricity, which is clearly the most versatile energy form known today. However, not all these functions, particularly in the dispersed rural context, require energy to be supplied in such a high quality form as electrical power. Many can be served most effectively by means of direct mechanical power, in the case of certain agricultural and industrial uses, or simple low-level heat energy systems, such as solar heat collection and biomass conversion, to satisfy certain agricultural and household needs. The advantage of converting heat and other forms of energy to electricity, however, is that electrical energy can be used to serve virtually any energy demand, other than automotive requirements, and offers unique opportunities for effective energy distribution and management. For this reason, rapid rural sector growth and prosperity in modern history has been uniformly associated with the introduction and expansion of modern rural electrification systems. The socio-economic impacts of rural electrification are numerous. Unemployment is decreased by greater agricultural activity and the creation of jobs in new industry. Agricultural production is increased and cropping seasons are extended through the availability of a dependable water source from modern irrigation systems. The potential for small-scale agricultural as well as non-agricultural industrial units is greatly increased by extending working hours and facilitating the use of power machinery. Moreover, improved health, education, and other public services increase the productivity of workers. This is not to say that rural development absolutely depends on rural electrification. Indeed, alternative energy systems play an important role in providing low-cost and readily available energy to serve rural areas, particularly in the initial stages of rural development.

What is evident from the existing experience with rural electrification is that electrical power supply can serve an important role in overall rural development, and that decentralization of this supply can make a significant contribution to the process of building a rural energy sector. The purpose of this paper is to explore ways in which decentralized energy sources, using small hydropower plants as a basis for the discussion, can best be put to use in decentralized rural contexts. It also suggests specific applications of small hydro installations to meet typical rural energy needs and which can help increase load factors, hence reducing unit costs.

Point of Departure

Any discussion of small-scale energy systems invites debate on a troublesome issue in rural energy development, namely, what is considered "small," and, on a related subject, what is meant by the term "decentralized." As these terms often appear together in the literature, often to the confusion of the reader, it is worth pausing to negotiate this semantic obstacle first. In certain contexts, "small" can mean any plant producing up to 25 or even 30 MW of electrical power; in others, it can mean plants of as low as 100 kW of capacity or smaller. For the purposes of this paper, the general issue of size will be left open. It can mean anything from the smallest turbine-generator installation up to a hydro plant of one, ten, or 50 MW. Small, in other words, refers to an energy supply system designed to serve an immediate purpose, or load. Excess energy that is produced to serve a surrounding community or grid system is therefore possible in this definition, but not assumed; likewise, small is not limited to fully isolated energy production and use. Thus, more to the point is the issue of decentralization. For the purposes of this paper, small-scale energy systems mean decentralized generation, but not necessarily decentralized distribution. Indeed, an important consideration of small-scale energy resources is the role they can play in overall energy supply development leading toward a fully integrated national energy system, both in the sense of electrical power sector interconnection and in the sense of complementary non-electric energy production and use.

MATCHING TECHNOLOGY TO NEED

In addition to the form of energy, other principal factors in determining the most efficient technological choice of energy sources to meet various energy needs include quality, capacity, supply (including timing considerations), and cost. Still other factors, such as the social acceptability of an energy system and the managerial expertise required to develop and control it, may come into play in matching technology to need. In order to maximize efficient use of energy resources, a screening process is generally advisable. A number of methodologies have been proposed for this purpose, notably one recently published by the Solar Energy Research Institute (Ashworth and Neuendorffer, 1980). Space does not permit a detailed discussion of this process. However, a few comments on the major factors mentioned above follow.

The quality of the energy source required is perhaps the most important consideration. Heat is considered an inferior form of energy when compared to mechanical work. The quality of heat energy is related to temperature; lower temperatures correspond to lower energy intensities and thus are of lesser quality. Typically, one classifies heat energy requirements as low temperature (drying foods), medium temperature (cooking), and high temperature (electricity generation). Mechanical work (shaft power) and electricity correspond to infinite temperatures and are the highest quality forms of energy (Meier, 1981). Electricity use for lighting is both

[2]In a project funded by the U.S. Agency for International Development, the University of Roorkee in India is working with university counterparts in the U.S. to develop a hybrid renewable energy system integrating small hydropower with biomass conversion to produce stored energy in the form of char briquettes. The project also focuses on the use of excess hydropower to store energy in the form of hydrogen and oxygen using electrolytic conversion of water.

convenient and inexpensive. On the other hand, the use of conventional electrical devices for low- and medium-temperature heating applications in traditional, low-income rural settings may be inadvisable due to the high cost of conventional devices. Other, less costly, traditional fuels and means may be more efficient for such applications, provided these are available.

Supply constraints may also be crucial to the energy choice. The supply of biomass, chiefly wood, is a problem common to many developing countries. Current efforts to reduce the use of fuelwood, which supplies up to 80% of rural cooking requirements, have concentrated attention on alternative energy solutions for household uses, which are discussed below. Supply constraints occur with other energy technologies as well. For example, where run-of-river hydro schemes have been developed as a substitute for traditional energy means, seasonal flow variations frequently interrupt the supply of power. To combat the supply problem, technologies which can store energy should be emphasized. Increasingly, hybrid energy systems which combine two or more energy forms, such as solar and wind, biomass, and small hydropower are being developed to serve year-round demand.

Finally, cost considerations are important in the matching process. A technologically ideal energy system is of limited value if it is not affordable — whether by the direct support of its users or indirectly through long-term subsidization. An important consideration here, in terms of high investment options such as hydroelectric power is plant capacity and the capacity utilization rate of such a plant. More will be said on this matter below, but suffice it to say that the matching process for this production option will depend largely on the efforts of energy planners to consider the total energy use of an installation and to manage it effectively.

OUTPUT CHARACTERISTICS OF SMALL HYDROPOWER

Except where small hydro plants are designed to operate close to minimum flows or where large storage is used, output is usually highly seasonal, depending on the availability of water. Aside from economic implications, this is rarely a major concern with grid-connected sites. In the isolated case, however, seasonal and daily fluctuations of power availability need to be closely matched to its uses.

The quality of the energy output of a small-scale hydro plant depends more on the uses to which the energy will be applied. Waterpower at the point of entry to the turbine is kinetic and/or pressure energy. That energy is used to rotate a shaft which, in turn, drives either a generator to produce electricity or is directly coupled to some machine. Thus, shaft power can be used mechanically or electrically. Some systems in Nepal, Colombia, Pakistan, and elsewhere produce both mechanical and electrical power.

Mechanical power, which has been used for various purposes by harnessing waterpower for centuries, must be used at the site. Contemporary examples of mechanical use of waterpower are commonplace throughout the developing world. In Nepal, crossflow turbines are used for rice hulling, milling, and polishing (Meier, 198[illegible]; Yoder, et. al., 1980). In Pakistan, plants in the 5-15 kW range are used to drive grain mills, bandsaws, lathes, and other rotary machines (Inversin, 1981).

An electric generator, either directly coupled to the turbine shaft or through a speed increaser, greatly enhances the versatility of waterpower. Generators can be direct current (DC) or alternating current (AC). DC schemes are simpler and less costly because speed regulation is not a requirement, but practical application of DC power is usually restricted to low power requirements near the site. Two advantages of DC are the potential use of vehicle generators (car, truck, airplane), and the option of storing energy in batteries without intermediate transformation. DC appliances, motors, and lighting fixtures, on the other hand, are not as readily available as AC devices. The potential applications of electric energy in agriculture, industry, commerce, and in the home are vast. Use of AC facilitates the transformation, transmission, and distribution of this energy. Both AC and DC can be used for lighting.

Direct mechanical power, for practical reasons, is generally only appropriate for the lower end of the power range (below 50 kW). Hybrid mechanical/electrical schemes add much versatility to the output but again, are only appropriate for the smaller projects. DC, while simplifying speed control, cannot be transmitted economically over very long distances without sophisticated technologies. AC generators can cover the entire range of power outputs, but voltage regulation and stability problems with small systems can cause problems. Motor loads can have starting requirements up to seven times running current, thus the system must be of sufficient capacity to meet this instantaneous demand. Also, severe instability can result if a single motor has a rating with respect to other loads of 1/3 or more of the system capacity (General Electric Company, 1963a). Since reliability of power is crucial to certain uses of power, these factors are of special importance.

In summary, a small plant can produce a full range of output possibilities — from mechanical power for either heat or motive force, to electrical power for either motive force, heat, or light (see Table 1). It can operate in isolation or can be grid connected. However, the availability of power and energy is determined by the available head, quantity and duration of flow, and the overall efficiency of the scheme.

LOAD PLANNING FOR SMALL-SCALE POWER SYSTEMS

A key aspect in matching energy sources to needs, as mentioned, is that of cost. This has implications for both the technological approach used to harness the energy and degree of its use — the capacity utilization, or plant factor. All too frequently, small decentralized hydropower plants fail not for technical reasons but as the result of low capacity utilization. The bane of isolated rural power stations, based on relatively high fixed capital cost and low operating costs, is the chronic problem of low load factors, which invariably raises the unit cost of the energy produced. An example of the all important relationship of load factor to unit cost is seen in Table 2 which shows comparative load factors and unit costs for five isolated 200 kW hydroplants built in the Uttar

Table 1 Type of End Use at Various Ranges of Power Output

	Mechanical	Mech/Elec hybrid	DC electricity	AC electricity
0 - 50 kW	Two or three directly connected machines (e.g. rice huller & polisher)	Daytime repair shop and mill; nighttime village electrification for lighting	Central battery charging; local electrification of immediate vicinity for lighting and small appliances	Small array of uses including local electrification
50 - 100 kW	Several large machines; entire factory	Rare	Electrification in vicinity, conceivably for small industry	Local electrification including small industrial & agricultural use; possibly supply grid with excess energy/capacity
100 - 500 kW	Rare	Rare	Rare	Electrification of major population center(s); scale for larger users; usually supplies grid energy
Above 500 kW	Non-existent to author's knowledge	Non-existant to author's knowledge	Rare	Grid supply

Pradesh region of northern India in the early 1970's (Dickinson and Whittington, 1978). Note that an increase in the load factor of about 10% reduces the unit cost of energy by as much as two-thirds.

For a modern form of energy such as electricity to contribute to rural development, it is generally felt that the energy must be put to productive use, whether in agricultural, commercial, industrial, or even household activities. Moreover, investment in costly, capital-intensive energy supply schemes in rural areas would

Table 2. Relationship of Load Factor to Generating Cost

Project	Average Load Factors (%)	Average kWh Cost (¢)
Guptkashi	23.6	7.0
Genti-Cherra	20.3	8.3
Tilwara	22.3	10.1
Koti	10.7	27.5
Deoprayag	4.1	62.5

represent a misallocation of scarce resources if used solely for domestic lighting or other household functions. The productive utilization of electricity can contribute to the user's or community's income, leading to potentially greater demand for the electricity. By establishing a productive use base load for the plant, unit costs can usually be brought down to a point where electrical power for household uses, including home industries, is affordable.

Base Load Applications

The most significant productive uses of decentralized electrical power generation in rural areas are in the production and processing of agricultural goods. Among those classified as uses in agricultural production, the most important is irrigation. With respect to processing, the use of small-scale machines employed in isolated rural settings to process crops are commonplace. Table 3 provides a general listing of electrical power use for such purposes. This data is drawn from a study performed on power use in three regions of India, although the load characteristics and consumption figures should approximate those in other parts of the world for similar equipment (General Electric Company, 1963b).

A second category of rural productive uses consists of a wide range of agro-industries. Some of these, offered with their approximate kW requirement ranges, include: saw mill (5-60), carpentry shop (3-15), loom (0.5-6), quarry (6-30), ice factory (6-60), fish processing (5-10), cold storage plant (6-60), and roofing tile plant (2-12).

Load-Levelling Applications

Despite the versatility of small hydropower, finding good uses to increase load factors is often a severe limitation. The best sites are frequently located in poor remote areas where economic activity is low. Thus, even though costs for site development in these areas might seem attractive, demand for such a quality energy source can sometimes be so low as to nullify investment benefits. There are a handful of potential applications currently under development which, under certain circumstances, could save otherwise good sites from the problem of finding appropriate uses. These applications, which utilize mechanical, AC, and DC electrical power, deserve special consideration.

Table 3 Technical Characteristics of Agricultural Processing Machinery

Process or Operation	Equipment	Motor Rating (hp)	Output (lbs/hr)	Power Consumption (kWh/100 lbs.)
Oil Pressing & Extraction	Hydraulic Press			
	Large	22	1,500	1.3
	Medium	16	1,000	1.5
	Small	8	130	4.5
	Screw Expeller			
	Large	20	2,000	1.0
	Medium	15	1,000	1.5
	Small	5	100	5.0
Rice Hulling	Disc Sheller (German)	25	2,400	0.8-1.0
	Japanese Rubber Roller Sheller	3	300	2.0-2.5
Cereal Milling	Large	20	500	1.5-2.0
	Small	5	180	2.0-3.0
Cotton Ginning	Large	20		
	Small	5	78	2.75-3.2
Fodder Chopping	Rotary Cutter	2-10		.25-1.0
Sugar Cane Processing	Crusher			
	Refining Pan	3-15		.50-3.0

Resistive heating applications. Resistance losses in electrical circuits result in heat generation. This is the well known I^2R term (current squared times circuit resistance). Virtually all medium- and low-temperature electrical heating devices work on this principle. An important application of this technique is for cooking. Recent developments with simple energy storage cookers have revived interest in an old idea to combat forest depletion. The key to this approach has been to develop an inexpensive means of storing energy for cooking during peak load periods. Traditionally, the heat was stored in material with high heat capacities, such as cast iron. More recently, research efforts have focused on the use of locally available materials in which to store heat (Yoder, 1981). This consists of a heating element imbedded in an insulated bed of stones, as shown in Fig. 1. Water is introduced into the heated stones to generate steam at atmospheric pressure. The steam provides heat to a conventional cooking vessel placed on top of the stones, where it condenses and then recycles back into the stone bed, which stores the energy. Using this system, an energy input of only 250 W can produce heat required to cook the daily meal of an average family. This was accomplished at considerably higher efficiencies than those found with conventional wood and gas stoves (21% vs. 3-6%). Simple resistive heat elements can also be used to perform a variety of other tasks, including heating water, space heating for homes or drying crops, ice-making, or even refrigeration of perishable foods and medicinal goods.

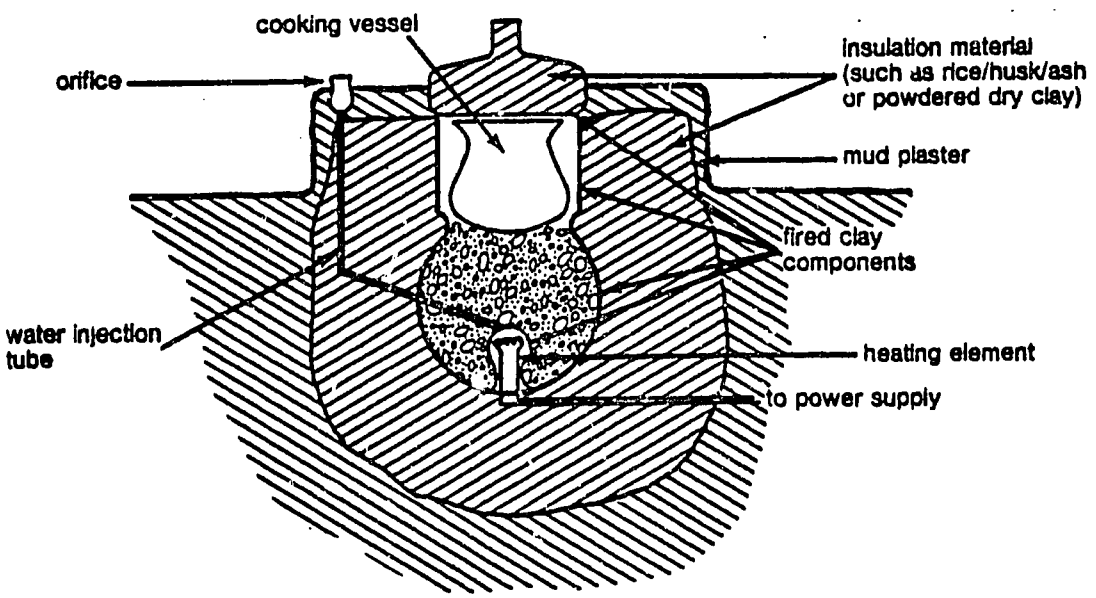

Fig. 1. Heat storage cooker

Mechanical heat generator. With respect to mechanical applications, shaft power can also be applied to generate heat without first converting to electricity. A mechanical heat generator, coupled to a turbine shaft by a V-belt drive, is being developed in Nepal to serve this purpose (Inversin, 1982). Fig. 2 presents the general schematic design. Air is drawn in by a fan through the inlet. The air then circulates over stationary baffles which are arranged radially. Kinetic energy heats the air as it forms into eddies. This hot air passes through the

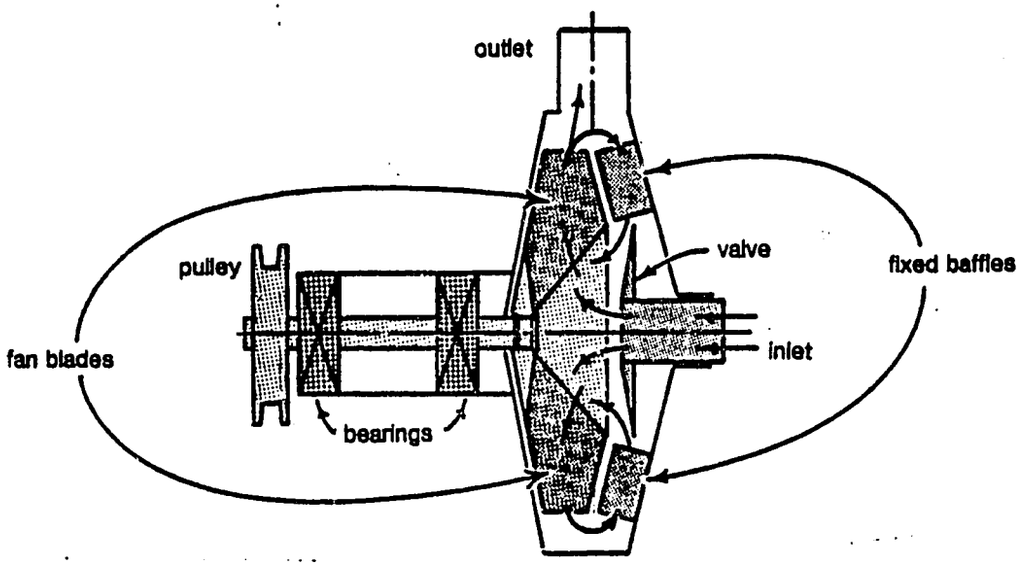

Fig. 2. Mechanical heat generator

valve which is attached to the movable intake tube, mixes with the incoming cooler air, and is drawn in again by the fan. A portion of the heated air is passed through the outlet opening into the drying racks, while the rest recycles over the baffles. The flow and temperature of the air is controlled by the valve. When it is in closed position, the generator is simply a fan blowing air at ambient temperature through the generator. As the valve is opened, by sliding the intake tube outwards, incrementally greater currents of air are cycled over the baffles. If the valve is fully opened nearly all the air leaving the fan is drawn through the baffles, thereby being heated to the maximum temperature of about 100 C (at 2,100 rpm). Any temperature between these two limits can be obtained by varying the opening of the valve.

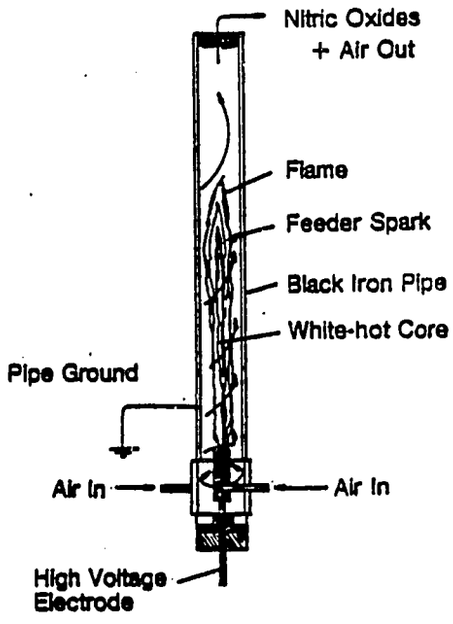

Fig. 3. Nitrogen fertilizer generator reaction cell

Battery charging. In addition to mechanical uses and resistive heat applications, a third means of raising off-peak loads for predominently household lighting and appliances is with a battery charging system. Frequently rural households in low-income regions initially have low demand for electricity, making the conventional electrical distribution uneconomical. Yet the provision of a few hundred watts to provide lighting, or to power small DC electrical appliances, radios, or televisions can make a big difference in a family's living standard. By hooking up a rectifier to the generator, excess power can be stored in a "battery bank" for general distribution to the public, particularly to families living a great distance from the distribution system. Alternatively, the battery charging system could be deployed in a local distribution network, where AC power is distributed directly to consumers and stored in batteries in the home or shop. Under this system, a limited quantity of electricity is distributed at a constant rate to be stored by the consumer on a continuing basis. The consumer then uses the stored energy at the appropriate time and quantity required (Nasaruddin, 1982).[3] This additional feature of an isolated power system is also useful for keeping automobile and farm equipment batteries charged.

Fertilizer production. The use of chemical fertilizers can greatly improve agricultural yields. On a large scale, the most economical way of producing high quality fertilizers is with the Haber-Bosch process. This process uses natural gas or liquid hydrocarbons for the production of ammonia, but is highly energy intensive. Furthermore, the centralized nature of fertilizer production leads to high transportation costs in reaching remote consumers. Another method of producing nitrogen fertilizer in a decentralized mode is the electric arc discharge method. The basic principle of the process is simple. Air is injected into an electric arc reactor, producing nitrogen oxides (see Fig. 3). To make the fertilizer, the nitrogen oxides are then passed through an absorption column of either limestone or rock phosphates and mixed with water. The result is high quality calcium nitrate fertilizer. An experimental

[3]In Malaysia, consideration is being given to the use of a "current limiter" and a battery charger at each electric connection to permit batteries to charge at a constant rate of 60 to 100 watts. A similar approach to DC power application is being considered in Indonesia.

3 kW unit requiring only readily available components and low-level technology has been operating successfully in the U.S. that produces sufficient fertilizer for up to 20 hectares (Charles F. Kettering Research Laboratory, 1980). In years past, the electric arc discharge method was considered an uneconomical means of producing fertilizer, and was abandoned. However, set in the context of a ballast load application, as proposed here, to utilize excess energy, this technique deserves renewed consideration.

LOAD MANAGEMENT WITH MULTIPLE-USE ENERGY SYSTEMS

Each rural site will have its own set of technical, economic, and administrative circumstances, hence, the need for a careful assessment of energy resources and end-use requirements. Assuming that an energy resource such as a small hydro plant exists, and that a number of productive uses can be found, a model system for a decentralized energy system might include many, or possibly all, of the foregoing categories of rural end-uses, both mechanical and electrical. For example, given a small hydro plant of 100 kW capacity, one could provide enough energy over the span of a year to run irrigation pumps, operate an electric arc reactor to produce nitrate fertilizer, process crops (including drying, grinding, hulling, oil expelling, etc.), run other light industrial machines, heat water or air, provide power for lighting and various appliances, or charge batteries — all at varying times of the day or year — for a community of perhaps 300 families or even more, depending on the number of uses and the energy required. The key to a multiple use system is effective load management. A relatively expensive component of a conventional hydro plant to meet this varied and irregular demand would be the plant's governing system. Recent development of electronic load controllers, however, which instead of controlling the turbine speed, control the distribution of the load served, promise to make this a relatively cheap and effortless task. Detailed explanation of electronic load controllers can be found elsewhere (Woodward and Boys, 1980), but simply put, an electric load controller allows continuous operation of the turbo-generator at full capacity. By sensing the frequency or voltage electronically, it directs the distribution of excess power to alternative tasks as required. Under the direction of the load controller, for example, base loads could include irrigation pumps, agro-processing and/or light rural industries during the daytime, at different times of the year according to the farming cycle, and lighting during the night. Off-peak ballast loads year-round could include any number of resistive heat loads, such as for the storage cooker, ice-making and refrigeration, or heating water or space; production of fertilizer, or secondary energy supplies; or battery charging. Some controllers currently under development, moreover, can be programmed to change load distribution automatically. This would be especially useful for nighttime applications.

CONCLUSION

Decentralized energy systems, which are small by definition, can thus serve an important role in rural energy supply. When the energy source available can provide low-cost electrical energy, as in the case of small hydropower plants, the chief concern is to develop adequate and appropriate uses of the energy to keep utilization rates high and provide greater income to the community so that the energy is affordable. The cost of introducing electricity to isolated rural areas is an expensive proposition due to high investment costs. But by the promotion of productive uses, the system capacity factors can be improved, lowering the unit costs and making the power more affordable. The key term here is "promotion." Productive uses of electric energy which serve as a tool for integrated rural development are constrained by numerous factors. Electricity is often considered a social good, and government responsibility and electrification programs in rural areas often place emphasis on household and public uses of electricity. Electric suppliers and users face severe shortages of capital and are understandably unwilling to take risks. Power supplies are often expensive and unreliable. It is difficult to convince consumers who have purchased diesel machinery or other non-electrical energy means that electric energy is superior. This is due to supply problems, the user's sunk investment, and his lack of familiarity with electricity. Ancillary electric machinery is rarely readily available, and the additional cost of purchasing such equipment tends to further retard electricity demand growth. Last but not least is the widespread lack of understanding of electricity and its proper and productive application.

A recent study of rural electrification in Indonesia found that the two most significant factors contributing to the expanded use of electric power in productive activities were the availability of capital to the consumer and the ability of the user to market his goods and services (Brodman, 1982). A third factor frequently mentioned in this study was the user's access to information about electricity and its uses. "Incorporation of the means to stimulate productive uses will be an essential factor in the achievement of positive project net return" is a statement that applies not only to the Indonesian rural electrification program but generally to any rural context. Technical solutions to problems represent only part of the effort required to make effective rural energy systems work, particularly those that are isolated. In addition to credit facilities and market extension services, this effort should include the development of consumer services to assist in planning energy uses and reviewing socio-economic factors relating to those uses, to make users aware of credit marketing programs and sources of end-use machinery, and to perform a wide range of training, informational, and general support activities essential to effective use and maintenance of energy systems and associated machinery.

In the United States, overcoming the constraints to productive use of electricity in rural areas did not happen overnight. It was the result of a concerted, dedicated effort on the part of several diverse groups, including rural electric cooperatives, banking institutions, agricultural extension services, electrical equipment manufacturers and their distributors, and major universities. The rural electric cooperatives took the lead in this activity. Through member service departments they conducted sign-up, promotional and educational drives, provided financing for equipment purchasing, and performed several other services to enable proper and productive use of electricity in rural areas. The lesson to be learned from the U.S. experience is that properly conceived and implemented promotional/educational programs, integrated into other developmental efforts, are vital to the success of rural energy programs.

REFERENCES

Ashworth, J. H., and J. W. Neuendorffer (1980). Matching Renewable Energy Systems to Village - Level Energy Needs. Solar Energy Research Institute, Golden, Colorado.

Brodman, J. (1982). Rural Electrification in Java. Resources for the Future, Washington, D.C. p. 82.

Charles F. Kettering Research Laboratory (1980). A nitrogen fertilizer production system for farm use. Kettering Foundation, Dayton, Ohio.

Dickinson H., and H. W. Whittington (1978). Rural electricity supplies. University of Edinburgh School of Engineering Science, Edinburgh, U.K.

General Electric Company (1963a). Small-scale power supplies for rural communities in developing countries. U. S. Agency for International Development. Report No. TA/OST-AN-63-3-1.

General Electric Company (1963b). Analysis of demand for electric power in rural communities. U. S. Agency for International Development. Contract AID REPAS-1.

Inversin, A. R. (1981). Pakistan—villager implemented micro-hydropower schemes: a case study. National Rural Electric Cooperative Association, Washington, D.C.

Meier, U. (1981). Local experience with micro-hydro technology. Swiss Center for Appropriate Technology, St. Gall, Switzerland.

Nasaruddin, H. (1982). A radical approach to rural electrification for developing countries. Small Hydropower for Asian Rural Development. National Rural Electric Cooperative Association, Washington, D.C.

Roorkee University (1982). Proceedings of an International Workshop on Hybrid Micro-Hydro Energy System. Water Resources Development Training Centre. Roorkee, India.

Woodward, J. L., and J. T. Boys (1980). Electronic load governors for small hydro plants. Water Power and Dam Construction, 11, 37-39.

Yoder, R. (1981). Energy storage for domestic cooking in Nepal (Master's thesis). Cornell University, New York.

Yoder, R., et. al. (1980). The United Mission to Nepal's involvement in small-scale waterpower development for milling. Cornell University. New York.

Best Available Document

Best Available Document