PN-AAP-556
ISN 33932

Bangladesh

An assessment of small hydropower potential

NRECA Small Decentralized Hydropower (SDH) Program

Bangladesh: An assessment of small hydroelectric potential

By John Topik and Al Mercer

November 1981

Sponsored by the United States Agency for International Development under Cooperative Agreement AID/DSAN-CA-0226

Small Decentralized Hydropower (SDH) Program
International Programs Division

National Rural Electric Cooperative Association (NRECA)
1800 Massachusetts Avenue NW, Washington, DC 20036

Small decentralized hydropower program

This publication is one of a series that fosters the effective use of small decentralized hydroelectric power systems. The series is published by the Small Decentralized Hydropower (SDH) Program, International Programs Division, National Rural Electric Cooperative Association (NRECA). NRECA operates the SDH Program under the terms of Cooperative Agreement AID/DSAN-CA-0226 with the Office of Energy, Science and Technology Bureau, U.S. Agency for International Development.

Under the agreement, begun in May 1980, NRECA provides a broad range of technical assistance to developing countries. NRECA provides such technical assistance by--

- Designing and implementing regional workshops in Africa, Asia, and Latin America
- Scoping and managing in-country resource surveys and site assessments
- Providing engineering, design, supervision, and specialized assistance
- Developing specialized publications, such as state-of-the-art reports, inventories of manufacturers, and assessment methodologies
- Conducting special studies into subjects of finance, management, and evaluation
- Providing training services in such topics as operation and maintenance, resource assessment, management, and fabrication
- Carrying out specialized services, such as tours of U.S. manufacturing plants
- Creating specialized products, such as productive-use plans for energy from small decentralized hydropower.

For more information on the SDH Program, please contact:

Information Specialist
Small Decentralized Hydropower Program
International Programs Division

NRECA
1800 Massachusetts Avenue NW
Washington, DC 20036

Telephone: 202-857-9622
Telex: 64260
Cable: NATRECA

Acknowledgment

The NRECA team wishes to thank all those in Bangladesh whose support was vital for the completion of this report in the short time allotted. The interest and enthusiasm shown was, indeed, an inspiration for our work. We trust that this report in turn will encourage hydroelectric development in Bangladesh. The following helped and advised us, together with others who cannot all be named in this space:

L.K. Siddiqui, State Minister for Power, Water Resources and Flood Control
Brigadier General Munim, Chairman, Power Development Board (PDB)
Mustafizur Rahman, Chairman, Water Development Board (WDB)
Aminul Islam, Chief Planning Engineer, WDB
Nurul Huda, Chief Barrage Design, WDB
Masud Hassan Jamali, Chief Staff Officer, PDB
Shamsur Rahman, Director, Teesta Irrigation Design, WDB

Our special thanks go to the officers of the WDB and PDB who accompanied us on the long field trips, as well as to the local officers whose information was invaluable.

Contents

Summary, 1
Conclusions, 3
Recommendations, 4
Objectives of assignment, 5
Nature of small hydro, 7
Features of Bangladesh relative to small hydro, 9
General opportunities for small hydro in Bangladesh, 15
Specific sites for small low-head hydro, 19
Small hydro equipment and typical layouts, 32
Benefits and costs, 45
References, 49

Appendix: Sample prefeasibility study, 50

Figures

1. Map of Bangladesh with potential small hydro sites, 10
2. Isohyetal map of Bangladesh, 16
3. Powerhouse layout--open-flume turbine with bypass multiple units, 34
4. Standard project types, 35
5. Powerhouse layout--open-flume turbine, without bypass, 36
6. Powerhouse layout--propeller turbine with headworks, 37
7. Powerhouse layout-bulb turbine with headworks, 38
8. Powerhouse layout--tubular turbine with headworks, 39
9. Powerhouse layout--vertical Francis turbine, 40
10. Alternative turbine arrangements--sections, 41
11. Sketch for Teesta Main Canal generating appraisal, 58
12. Typical powerhouse layout and basic dimensions, 59
13. Open-flume turbine costs, 60
14. Cost of electrical equipment, 61
15. Open-flume turbine--powerhouse area and cost, without bypass, 62
16. Section views of canal and powerhouse, 63

Tables

1. Summary of potential small hydro sites, 30
2. Typical turbine performance characteristics, 33
3. Estimated small hydropower capital costs, 47

Previous Page Blank

A two man team of the National Rural Electric Cooperative Association (NRECA) made a four week assessment of the potential for small, low-head hydroelectric generation in Bangladesh. The team was sponsored by USAID/Washington and received the full cooperation of the Bangladeshi Water Development Board (WDB) and Power Development Board (PDB).

The team made field trips to four areas where small hydroelectric projects appeared feasible generally in hilly areas close to the Indian border and inspected a number of small rivers. Generation possibilities at irrigation barrages and canals now under construction were also investigated. Local officials of the WDB and PDB gave valuable assistance in regard to technical, economic, and social aspects of potential hydro projects.

The team found that small, low-head hydroelectric projects are feasible and should be pursued, despite some unfavorable conditions. These included the country's generally flat topography, the absence of small dams and canal drops where turbine-generators could be installed, and the existence of a rather extensive electric grid system that favors larger, centralized hydroelectric plants with lower unit costs. Advantages that outweigh these factors are the need for electrification of isolated rural areas, better power supply for irrigation pumps, and gravity irrigation from the dams and barrages. Secondary benefits include small, decentralized industries in the countryside, fish cultivation and control of the frequent flash floods. Useful work and badly needed jobs would be created. The small generation stations are uncomplicated, can be built in quite a short time, and require a relatively modest capital investment. A prefeasibility study of one site indicates that the value of electric generation would more than repay the cost of a powerhouse with all equipment.

Where a new dam, spillway or barrage is needed, the irrigation benefits will have to pay a major portion of these structures. Since such construction is required for nearly all projects, the small hydro plants should always be built in conjunction with irrigation projects to achieve full cost effectiveness. An economic analysis must deal with the costs and benefits of the power and irrigation features.

With the exception of the Teesta Canal drop, where as many as five generating stations with 11,000 kW total capacity appear possible, the small hydroplants will have capabilities in the 25 kW range. The total potential generation is not known because many small streams with apparent generating potential have yet to be evaluated. The small hydro stations will have a modest positive influence on the overall deficit in generating capacity of the country. Small hydro plants of less than 25 kW capacity are recommended for local government or private enterprise construction.

The NRECA team recommends establishing a permanent hydroelectric directorate with staff from the Water and Power Development Board, to deal with both small and larger hydroelectric projects. This agency should survey and make an inventory of all streams where hydro generation appears possible. In addition, prefeasibility studies should be made at once for six sites listed under "Recommendations" in this report. The project showing the best benefits should be implemented after a full feasibility analysis. A project with a small barrage would be preferable as a pilot project because it would be most typical of future Bangladeshi hydroelectric installations. When completed, in several years, the Teesta Canal project will offer the best possibilities of power generation.

The NRECA team spent the balance of its time in Bangladesh analysing the collected data in working meetings with WDB engineers and preparing this report. It left Dacca on October 20.

Conclusions

1. Small, low-head hydroelectric plants are feasible in Bangladesh (a) with new, conventional dams on mountain streams; (b) with new small barrages; (c) at drop structures of the Teesta irrigation canals; (d) possibly at the Monu barrage. The Teesta Canals have the best generating possibilities but completion of the canals is several years away.

2. Plants built on small rivers will require new dams or barrages. They must be built in conjunction with irrigation/flood control projects which will have to pay for a major part of the cost of the dams or barrages.

On the Teesta Canal, however, hydro plants could be installed on irrigation drop structures already scheduled for construction. These plants would produce about ten times more power and energy than the combined output of all projected river hydro plants.

3. For the sites investigated, the value of generated energy (kWh) and capacity (kW) will more than repay the cost of the powerhouse including turbine-generator and accessories.

4. A substantial number of streams as yet unevaluated seem to have generating potential similar tc the streams discussed herein.

5. The small hydro plants will generally have a capacity in the 25 kW to 200 kW range. For the Teesta Canal drops, the small hydro installations would be in the 2000 kW to 5000 kW range.

6. Projects of less than 25 kW should be undertaken by the local governments or private enterprises.

7. The cost of a small plant, including turbine-generator and accessories, but not including a dam or barrage, is about U.S. $1375/kW for a 1000 kW installation with a 40' head, to U.S. $5500/kW for a 125 kW plant with a 10' head.

8. Small hydro projects will help in the electrification of some isolated villages and rural areas. They will facilitate the creation of small, decentralized industries in the countryside. Through their multi-purpose features, they will stimulate irrigation and fish cultivation. A great number of badly needed useful jobs will be created.

9. While the projects recommended in this report will be most useful, large installations on major rivers like the Songu and Matomuhari are needed to overcome the substantial Bangladeshi power deficit. But these efforts must await the availability of large capital investment.

1. A permanent hydroelectric directorate should be created with a staff drawn from the Water Development Board and Power Development Board. This directorate should deal with all new hydroelectric projects, and must have a strong irrigation engineering capability.

2. A thorough reconnaissance of all streams with apparent generating potential should be undertaken.

3. Prefeasibility studies focusing on power and irrigation should be initiated at once for the following sites:

Soalack in the Chittagong Hill Tracts
Chota Kumira on the Chittagong District
Nikhari in the Sylhet District
Marisi in the Jamalpur District
Talma in the Dinajpur District
Teesta canals in the Rangpur District

4. The project showing the best benefits should be evaluated further with full feasibility study leading to implementation. A project with a barrage, the Marisi or Talma sites, for example, would be preferable as a pilot project because most small hydros in Bangladesh will be of this type.

5. An engineering team should be sent to the United States to study design details, construction, plant operation and generating machinery of small, low-head plants. California, with its numerous small hydroelectric-irrigation projects in various stages of construction, offers fertile research ground for this team.

6. The feasibility of manufacturing small, low-head turbines, or components thereof, at existing Bangladeshi facilities should be determined. When possible, designs should be modified to fit the capabilities of Bangladeshi industry.

Terms of reference

The purpose of the assignment was to analyze the potential for small hydroelectric developments in Bangladesh. In the event of a positive assessment, the team was to recommend steps that would lead to a comprehensive small hydropower program and ultimately to the construction of small hydro installations.

For this purpose, USAID/Dacca invited a two man team to Bangladesh for a four week reconnaissance and assessment of potential sites. The team was sponsored by the USAID/Washington Energy Office (ST/EY) through their cooperative agreement for small decentralized hydropower with the National Rural Electric Cooperative Association (NRECA). The terms of reference included an examination of physical, technical, social, economic and environmental aspects of possible small hydro installations, and a review of previously collected data and reports. Limiting factors and criteria for suitability of proposed sites were to be established. Recommendation concerning equipment were to be made. Cost data and conclusions about the economics of small hydro installations were to be developed. Following the visits to a number of potential sites, the team was to identify and rank the known sites for more detailed studies and eventual construction. A sample prefeasibility study of one specific site was to be made and institutional steps for the implementation of the small hydro program were to be recommended. In summary, the NRECA team of experts was to make final determination whether a small hydro program was to be pursued and if so, what needed to be done to carry out this program.

Review of activities

The NRECA team arrived in Dacca on September 20, 1981. The following day it met with the Working Committee on Small Hydro Power Generation, and with individual committee members. The team was also received by Brigadier General Munim, Chairman of the Power Development Board and Mr. Mustafizur Rahman, Chairman of the Water Development Board. Other meetings were held with Mr. Masud Mahbubul of the Planning Commission, Mr. Aminul Islam, chief planning engineer, WDB, and convenor of the Working Committee, Mr. Dennis Zinakis, USAID and Mr. Edward Gaither, team leader of the NRECA rural electrification team.

The team had the pleasant surprise that the Working Committee had already made brief surveys of potential sites in the only four areas of Bangladesh with hills and small streams. Candidate sites were identified, topographic, hydrological and demographic data were collected and preliminary calculations of possible power and energy production were made. Although these brief surveys by no means included all potential sites, the committee's work served as the basis for the NRECA team's field work and assessment of small hydro potential. In the course of its own short stay in Bangladesh, the team looked at

additional small hydro possibilities at two barrages now under construction and at canal drop structures in the design stage. It must be stressed however, that a longer, more thorough reconnaissance will likely reveal additional small hydro possibilities.

The week-long holiday on the occassion of Eid-ul-Azha, compelled the team to accelerate its original tight schedule in order to complete its field work before the holidays. Consequently, the team left on September 25 for four field inspection trips. It was accompanied by officers of the WDB and PDB who had worked on the earlier mentioned preliminary surveys. The four areas visited were the Chittagong-Chittagong Hill Tracts Districts, the Sylhet District, the Mymensingh District and the Dinajpur-Rangpur Districts. In each area, local officers of the WDB and PDB joined the team for site inspections and supplied additional data on local conditions that include the power situation, as well as economic and social factors. The local officers also very kindly arranged accommodations at WDB and PDB rest houses as well as 4-wheel drive transportation.

The field trips and discussions were invaluable in giving the NRECA team a well-rounded picture for its assessment of small hydro possibilities.

The team returned to Dacca on October 5, just before the close of business for the Eid holidays. It had a last minute meeting with Mr. L. K. Siddiqui, state minister for power, water resources and flood control. The secretary of the ministry also attended the meeting, as did the chairman of the WDB and PDB, Chief Engineer Aminul Islam and members of the Working Committee.

Small hydroelectric plants differ substantially from both large hydroelectric plants and diesel powered plants of any size.

Compared with large hydro installations, the small hydroplant has little influence on the overall power grid. The small hydroplant can not be depended on in the event of a major power outage or blackout, nor does it give much help to a power system (like the Bangladeshi) that is chronically short on peaking capacity. Consequently, the small plant does not need all the controls, safety equipment and auxiliaries required for the large hydro to prevent failures and to facilitate plant re-starting. The machinery and instrumentation of a small plant is much simpler and less costly. A small hydroplant can also be engineered and built in a relatively short time. Frequently it is simply an addition to an existing structure.

Compared with a diesel generating unit of equal capacity, the initial capital investment for a small hydro unit is much greater, even though the diesel engine is a more complex mechanism. The reason is simply that diesel engines are mass produced while hydro turbines are custom made. However, the concept of small hydro turbines recently has gained importance, and manufacturers are beginning to standardize small units for lower cost.

What gives small hydro turbines an advantage over diesel in the long run is, of course, the fact that the hydro "fuel" is free while diesel fuel becomes more and more expensive and requires foreign exchange.

Since the output of a turbine is a direct function of head and flow, the unit cost (per kW) of a hydro turbine increases as the capacity and the available head decrease. The smaller the capacity and the lower the head, the greater is the cost per kW. To produce the same amount of power, a turbine with a 10' head requires twice as much flow as a turbine with a 20' head. Therefore, the lower head turbine will be physically much larger and more expensive than the higher head unit.

The low heads prevalent in Bangladeshi rivers can be used for small capacity turbines. High capacity turbines would simply become too big to accommodate the necessary large flows.

An extreme case of low head hydropower of particular interest to Bangladesh is the possibility of using "no-head" turbines in the large rivers. These would act like windmills, taking energy from the velocity of the flow. Unfortunately, the present state of the art precludes this option. However research and development is taking place to utilize the velocity energy to a river. The

"Schneider Lift Translator" being developed in the United States is an example of possible new technology.

The energy output as well as the dependable or "firm" value of a small hydro installation can be increased by a reservoir that stores the wet season flow. (As pointed out earlier, the dependable value of a small plant is small when the plant is connected to the grid system, but important when the plant serves a decentralized, isolated system).

Ideally the water storage, and the head, come from an existing storage dam that requires only the addition of a generating unit. Such reservoirs do not exist in Bangladesh and storage is usually difficult and expensive to build. For this reason, most small hydro installations must be constructed as multi-purpose projects so that the irrigation flood control benefits will pay a major portion of the storage dam or barrage cost.

Bangladesh is a country of 55,600 square miles consisting almost entirely of an enormous deltaic basin formed by the Ganges, Brahmaputra and Meghna Rivers (figure 1). These three rivers join the drain into the Bay of Bengal to the south. Bangladesh borders on India to the west, north and east, and briefly with Burma to the south-east. It is divided for administrative purposes into a number of districts each named for the principal town of the area. It has a population of roughly ninety-four million people (1600 persons per sq.mi.), with 91 percent living in the rural areas. The per capita annual income is roughly Tk.1200* ($60 US). Only 3 percent of the population receives electric power in their homes.

Topography

The dominant physical features of the country is the Brahmaputra River system entering Bangladesh from the north, the river flows south, dividing the country in half. The roughly ten mile wide expanse of channels and islands is crossed only by ferry routes. This river has several names. For some distance above the junction with the Ganges, which enters from the west, it is called the Jamuna. Between its confluences with the Ganges and the Meghna, which enters from the east, it is called the Padma. Below this it is called the Lower Meghna.

The main area in Bangladesh with hills and low mountains is the Chittagong District and the Chittagong Hill Tracts to the east. The hills rise from the low flat coastal plain, followed by mountains reaching elevations of 3000 feet. The hilly and mountainous areas are very isolated, with almost no roads, and are inhabited mainly by primitive tribal people. There are several large rivers and many smaller ones flowing out of the hills. One of the largest is the Karnaphuli, which has been dammed at Kaptai the site of Bangladesh's only hydropower plant. Others such as the Songu and Matamuhari are being studied for hydropower.

There are also low hills in the Sylhet District in the northeast corner of Bangladesh, that extend into Bangladesh from India. There are extensive tea plantations in these hill areas because of the favorable drainage.

The remainder of Bangladesh is flat. The only relief is provided by the river and drainage channels which, in the dry season, have water levels 20 or more feet below the terrain. In the wet season they overflow everywhere, flooding much of the countryside. A large percentage of the country is below the twenty-five foot contour line, however the northeast corner (Dinajpur and Rangpur

*One United States dollar ($US) is equivalent to Tk. 19 (taka) as of October 1981.

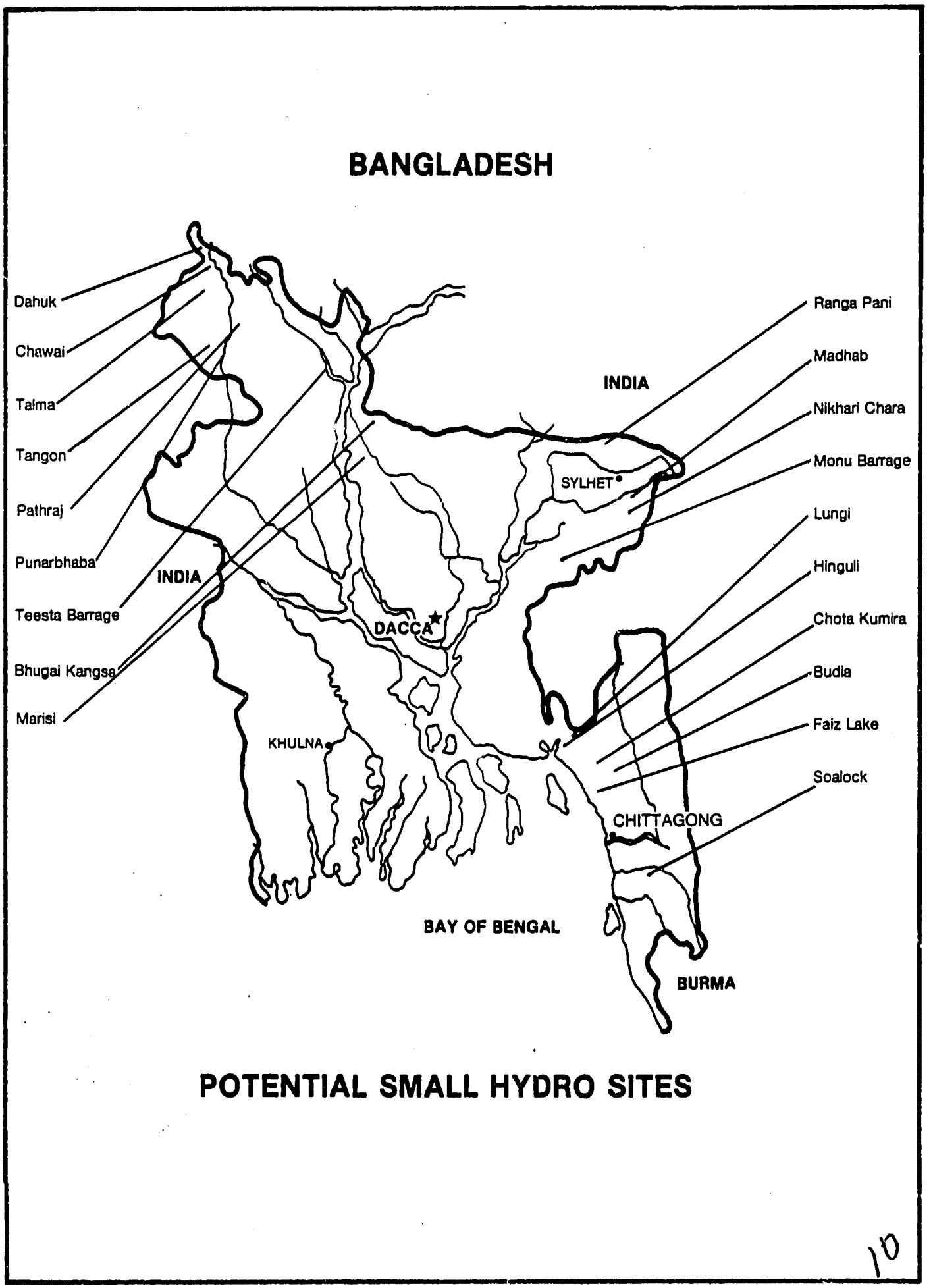

Figure 1 Map of Bangladesh with potential small hydro sites

Districts), while very flat, has a gradient of 2 or 3 feet per mile sloping up towards the northeast.

The mountains just beyond the Indian border have a maximum elevation of 300 feet above sea level. A number of large and small rivers flow down this slope and the largest, the Teesta, is being dammed. A similar topographic situation prevails in the Mymensing-Jamalyur area.

While Bangladesh is very flat, most of the border country in India to the north and east is mountainous with the border located right along the base of the hills. A large number of rivers rise in these hills, and flow into Bangladesh with gradients at the border of 5 feet per mile. Most of these eventually reach the Meghna.

Hydrology

The precipitation in Bangladesh is concentrated in the monsoon period that extends from the middle of June to the end of October. There are also short intense rain storms in April and May and November, mostly from cyclones originating in the Bay of Bengal. Isohyetal maps of Bangladesh show average annual rainfall over most of the country to be between 60 and 100 inches per year. The exception is the northwest region (the Sylhet District) where rainfall increases northward toward the Himalayas to a maximum of 220 inches along the northern border with India.

Flows in the major rivers of Bangladesh are the result of rains and snowmelt from the Himalayas. For instance, flows in the Bramaputra start to increase in March and April due to snowmelt and reach their peak during July, August and September. Throughout this period the average rise in water level is 21 feet. As a result, enormous areas are flooded every year. Flows decrease rapidly during October and November and reach a minimum in February. The Ganges follows this pattern but, receiving less snowmelt, does not start to increase its flow until early in June. There is some time lag as the flood peak passes through the country, but it amounts to only several weeks at most. The smaller rivers tend to follow this pattern as well, but those originating in the hill areas tend to be more extreme because of more rapid runoff after rain storms. In Chittagong, particularly, cyclonic storms can cause serious flash floods.

One important advantage of the very regular terrain is that hydrologic conditions have a high degree of consistency thus transfer of data from one drainage basin to another nearby is quite feasible. A study of five Bangladesh rivers yielded the following distribution of monthly flows:

Monthly flows as a percent of annual flow		
Month	5-river average	Teesta river
January	1.0	2.4
February	0.9	1.6
March	0.8	2.4
April	0.8	3.3
May	2.1	6.2
June	17.4	16.7
July	24.3	16.7
August	28.0	16.7
September	15.0	16.7
October	10.0	8.2
November	3.2	6.2
December	1.5	2.4
	100.0	100.0

For comparison, similar data is shown for the Teesta River in Rangpur District where an irrigation barrage is being built.

These figures clearly demonstrate the low flows that occur from November through May. It is also clear why, under slightly different drainage conditions, many smaller Bangladesh rivers are dry during the winter. One difficulty is that the feasibility of small hydro in some cases hinges on the dependability of the winter flows which already are a very small fraction of the total annual flow.

Hydrometeorological data

An extensive network of rainfall, river stage and river discharge measuring stations are operated throughout Bangladesh by the Directorate of Surface Water Hydrology (WDB). The data were compiled and published annually in the Hydrology Year Book. Publication was suspended following the 1973 edition. More recent data is available on request on a station-by-station basis.

Some of the data dates back to the early 1900s but most stations were established in the 1950s and 1960s. River stage is usually read several times a day, but river discharge is usually measured by velocity meter traverses every two weeks during the summer and monthly during the winter. Since most ungauged streams are reasonably close to gauged rivers, reliable data transfer on the basis of drainage area can be made. The World Bank publishes two comprehensive hydrology map sheets of Bangladesh showing all hydrometeorological stations.

Topographic maps and river drainage maps are available for most of the country, but very little information is available in Bangladesh on the drainage basis of rivers that rise in India. This is a major impediment to hydrological analysis of a number of rivers considered for small hydro.

In view of the need for accurate flow determinations and the problem of the lack of Indian data, the NRECA team suggests that one year of stream gauging would be necessary on an ungauged river before a full feasibility study for small hydro could be completed.

Existing power system and grid

The power system in Bangladesh, in large measure is operated by the Bangladesh Power Development Board. Rural electrification, a small and relatively recent program, is under the Rural Electrification Board (REB). These boards and the WDB, are part of the Ministry of Water, Power and Flood Control.

Two separate grid systems are required because of the difficulty of crossing the Brahmaputra River system, but an interconnector is being constructed. The west grid is fueled mostly by imported liquid fuels at a cost of Tk.2.35 per kWh, according to the 1979-80 Annual Report of the PDB.

The east grid has the advantage of the 80 MW hydro at Kaptai and natural gas that fuels gas fired steam plants and gas turbine. The fuel costs for the east grid are reported to be Tk.0.10 per kWh. The interconnector will balance these costs somewhat. But Bangladesh is very short of generating capacity throughout the country, thus transferable surplus energy will exist only during non-peak hours.

Bangladesh is a small compact country and the grid system is extensive. The 1979-80 Annual Report lists almost 9000 miles of 11 kv and 0.4 kv line, 3000 miles of 33 kv line and 900 miles of 132 kv line. As a result, except for the delta lands and the Chittagong Hill Tracts, few areas are remote from the grid.

The peak demand load for the country in 1979-80 was 461 MW of which 80 MW was supplied by the two units at the hydro station at Kaptai. A third unit of 50 MW is presently being installed there and planning is underway for two more 50 MW units.

Socioeconomic conditions

The following statistics present a brief overview of socioeconomic factors in Bangladesh:

Population data	
Total population	94 million (roughly)
Area	55,596 square miles
Density of population	1600 persons per square mile (roughly)
Birth rate	38 per 1000
Death rate	11 per 1000
Growth rate	27 per 1000
Life expectancy	48
Infant mortality	140 per 1000
Population rural	91.2
Population below age 15	48
Economic data	
Per capita income per annum	Tk. 1220.00 (roughly)
Labor force (civilian)	22.7 million
Unemployment	30
Health data	
Ratio of doctor to population	1 : 12,111
Percent of population suffering from moderate malnutrition	50
Percent of population suffering from severe malnutrition	15

Small, low-head hydro is attractive and cost effective in developed countries like the United States because of the thousands of water storage dams and irrigation drops where generating units can be installed at relatively low cost. There are few small hydropower sites in Bangladesh where a small unit can be installed without building a significant dam and spillway. See figure 2. Two such sites were pointed out to the team. One was at an existing dam at Faiz Lake in Chittagong where a 4 kW plant could be installed. If this site were typical of many sites in Bangladesh it could be considered as a pilot project. However, since it is an exceptional case and of minimal size it has little value as a government project. The other site is a water fall, estimated to be 100 feet high, situated on a small hilly stream called Madhab Chara (Chara means small river). The site is in a tea plantation and has great potential as a recreational spot. During the brief time the team was at the site, four separate parties of picnicers were observed. The small power potential does not seem to justify tampering with this very attractive site. It also has little value as a pilot project because of its uniqueness.

There also seems to be no opportunity for hydropower in the entire flat central area of Bangladesh, since there are no significant drops. As noted earlier, generating power from the velocity of the large flowing rivers or tidal streams is not possible at present.

There are undoubtedly possibilities for small hydro in the mountainous areas of the Chittagong Hill Tracts, but this area is largely inaccessible and the team could make no assessment. The tribal people there probably have little need for electricity at this time. Further, the area seems more suitable for conventional sized hydropower installations similar to that at Kaptai, which should be developed first.

This leaves the hill areas of Chittagong and Sylhet and the steeper plain areas to the north (Sylhet, Mymensingh, Jamalpur, Rangpur and Dinajpur Districts) as possible areas for feasible small hydro. Even here, substantial impoundment and spillway structures must be involved because of the low terrain and high monsoon flows. Thus, to be cost effective, the projects must be multiple purpose projects, combining small hydro with irrigation and flood control.

Three types of projects suitable to these areas have been identified. The first type consists of sites on small streams in the hill areas where conventional small earth dams can be built to create head and storage to augment the winter flows. At these sites the increased winter flows released from the turbines can be used to irrigate crop lands farther downstream. Without this benefit the projects would not be economically feasible.

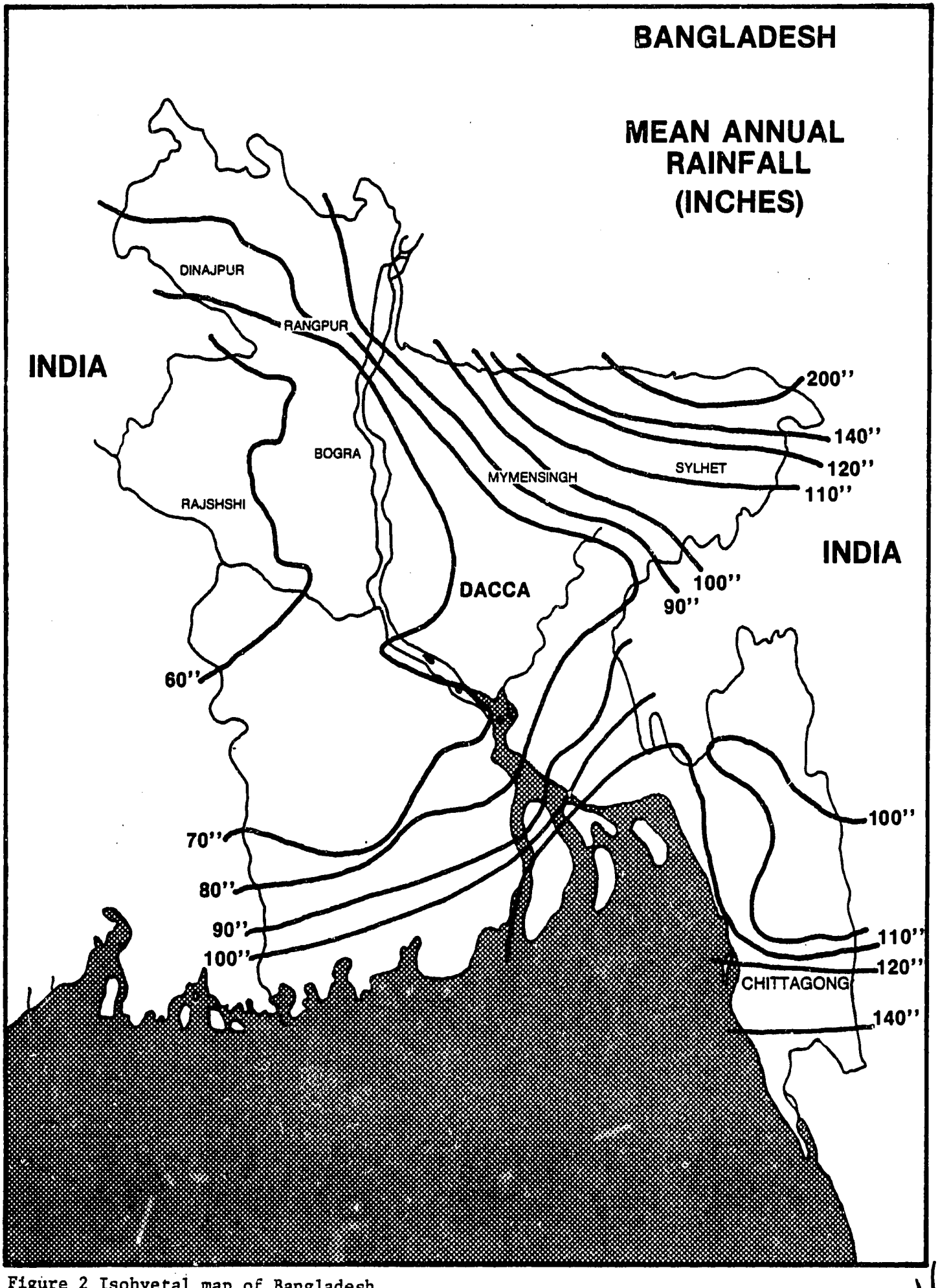

Figure 2 Isohyetal map of Bangladesh

The amount of energy generated depends on:

1. the annual runoff and the monthly distribution of flows,

2. the storage available

3. the head available and

4. the size of units installed.

These variables would be explored first in a prefeasibility study of the site. For a preliminary assessment of the first type of site it will be assumed that storage equivalent to 10 percent of the annual runoff can be made available. An analysis shows this is sufficient storage to allow 40 percent of the runoff to pass through the generators assuming the monthly distribution described earlier. It will also increase average winter flows by 400 percent and decrease average monsoon flows by about 12 percent. In most cases the storage will exceed this percentage and the benefits will be greater.

The second type of project is a low head barrage on the steeper gradient rivers of north Bangladesh. A low gated structure, similar to the Buree Barrage that the team visited in Dinajpur, would be built to head up the water during the winter season to several feet above river bank level.

Fairly long, but inexpensive, earthern embankments would be needed to complete the closure. During the monsoon season the gates would be opened wide to pass the flood waters, and generation would have to cease for about four months due to lack of head differential. Generation during the remainder of the year would depend on the capacity of the units installed. According to the flow distribution given earlier, about 12 percent of the annual flow could pass through the generators if the capacity were sufficient to handle twice the minimum flow. This is the assumption used in estimating the capacity and energy output for these sites.

Most barrages of this type would be located in areas where deep tubewells or low-lift pumps are being used to supply winter irrigation water. One argument for not installing generation of this type is that it may be cheaper to build the barrages for gravity irrigation only rather than dropping the water through a turbine to the river bed. It is estimated that the cost of pumping water from an electric tubewell (Tk.75 per kWh) is approximately Tk.60/acre foot. The cost of pumping water from the river bed with a diesel driven low lift pump is estimated to be about Tk.160/acre foot. In comparison, the revenue gained per acre foot (Tk.75 per kWh) from a low head turbine would be approximately Tk.10 per acre foot. Thus, there may be an advantage in building these small barrages only for irrigation rather than irrigation and electric power.

At some sites visited in the north there are low hills that would permit the construction of barrages 10 or more feet above the river bank

level without the use of extensive earthern embankments. This would provide generating head even during the monsoon seasons, and would provide storage to augment winter flows. Irrigation in the winter and generation during the summer and part of the winter would then be possible. The calculation of possible generation at these sites is based on storage amounting to 10 percent of the annual runoff and generating capacity four times that needed for minimum flow. Assuming winter irrigation lasts four months, or one-third of the year, the turbines would handle 30 percent of the annual flow.

The third type of project is generation installed in irrigation canal drop structures. There are no such structures in Bangladesh at the present time, but the Teesta Canal of the Teesta Barrage Project (under construction) will traverse terrain having a gradient of two feet per mile. It will transport as much as 9000 cfs. Of course the canal also must have a gradient caused by the water slope and any necessary check structures, but the surplus gradient can be used to create drops for power generation. The canal water level must be about 5 feet above the terrain to provide command, i.e., allow irrigation on the land. Therefore, upstream of a powerplant the water level must be about 15 feet above the terrain to provide a 10 foot drop. These water levels must be maintained by embankments on each side of the canal. The extra costs would not be great because much of the embankment material would come from the canal excavation. An 11 MW unit could be installed in this system, but the problem of seepage control and safety against breaching must be dealt with.

No doubt other barrages will be developed in the steeper gradient parts of Bangladesh. These can be considered for power generation at the appropriate time.

In summary, the best small hydro projects in Bangladesh are the sites where small earth dams would provide head, storage, and drop structure in large canals. Small hydro installations are also possible at existing and future barrages, but the economics of using the water for power instead of irrigation must be determined.

The previous chapter listed the following possibilities for small, low-head hydro installations:

New dams on small mountain streams
Barrages now under construction
New small barrages
Irrigation drop structures now being designed.

As noted above, the NRECA team's assessment was based on specific stream site identified by the Inter-Ministerial Committee's four regional groups, plus certain barrages and canal drops, now under construction, for which the NRECA team saw small hydro possibilities. These specific sites are discussed below. The results are tabulated in table 1 (p. 30). Again it must be mentioned that these possibilities are not all-inclusive. Maps and personal observations indicate the existence of streams not evaluated by either the committee's four regional groups or the NRECA team, due to insufficient time and data.

Chittagong-Chittagong Hill Tracts area

The small streams originate in forested hills within Bangladeshi borders and have a steep gradient of 4 to 10 feet per mile. The gradient gradually decreases after the rivers leave the foothills and is quite small in the plants. The streams discharge into larger rivers such as the Songu and Karnaphuli. The discharges in the maximum flow month (July) are from 20 to 30 times greater than the minimum monthly discharges (March). Local rains often cause large fish floods with heavy silt loads. Dams described in the following can be built at sufficiently high locations to allow the discharge from the power plant to irrigate cropland in the plains. Dams must have high capacity spillways. Runoffs were empirically calculated from 63 years of rainfall records at Chittagong and the drainage area. The result was a monthly runoff equal to 48 percent of the monthly rainfall over the drainage area, the remainder of the rainfall being lost to evaporation, infiltration, and local ground storage. Average annual rainfall over the period of record at Chittagong is 112 inches.

Faiz Lake. The only site observed in Bangladesh with an existing water supply dam is Faiz Lake. The catchment area is 320 acres, the reported drop through the existing 12-inch pipe is 39.5 feet, and the regulated monthly flow throughout the year is 1.5 cfs. Power generated would be about 4 kW which is considered insufficient for a government-sponsored project. The NRECA team recommended against this site.

Chota Kumira Chara (visited by NRECA team). The site is 16 miles north of Chittagong in low hill country, one-half mile east of the coast highway and one-quarter mile from a powerline and railroad.

The catchment area is 2240 acres. A copy of the detailed irrigation feasibility study made for this site in the 1960s was not available.

It appeared that a 40-foot high dam with a crest length of some 500 feet could be built at the site.

The reservoir would flood undeveloped land. Assuming that the storage is adequate, the regulated average annual flow would be 11 cfs per month. With a 40-foot head, about 30 kW or about 250,000 kWh per year could be generated. A single Francis turbine appears appropriate in view of the constant flow. About 2000 acres of rice could receive supplementary irrigation. Fish culture and flood control would be additional benefits.

Hinguli Chara. The site is north of Chittagong about 1.5 miles from a powerline and railroad. The catchment area is about 2500 acres. Since the NRECA team was unable to see this site, only the data from committee's report can be given.

The river is reported to be 50 feet wide, bank to bank, and to have a depth of 12 feet. The valley is reported to be only 350 feet wide. The regulated average annual flow has been calculated at 12 cfs. The probable head at the dam is given as 15 feet. This seems very low, if the depth from the bank to river bed is only 12 feet. It would appear that a higher head could be created by means of a dam in the narrow valley.

Based on a 15-foot head and 12 cfs average flow, a capacity of 12 kW has been calculated. This would be too small for a government-sponsored project, unless the irrigation of 1200 acres, which reportedly could be accomplished, would make the project cost effective. The NRECA team recommends that the possibility of a higher dam and larger power station be investigated.

Soalock River (visited by NRECA team). The dam site is about 15 miles south of Chittagong, near the town of Bandarban. The catchment area is about 15,000 acres and it discharges into the Sangu River. A small tribal village (not Bandarban) is close by. At the dam site, the hills are rather steep with tropical forest and some fields. The topsoil consists of clay with some sand. A road cut disclosed that rock was quite close to the surface. A 33-kV powerline is about 2 miles away.

A dam 30 to 40 feet high, with a crest length of 500 to 600 feet, could be built downstream of the village. The river slope is fairly steep, about 5 to 6 feet per mile. The reservoir would extend about 7 miles upstream but would flood mostly uncultivated land and possibly some small tribal villages.

The regulated average annual flow would be about 70 cfs. With 70 cfs and a 35-foot head, the power and energy would be about 170 kW or 1,400,000 kWh/year.

Irrigation possibilities are not known at this time, but fish culture and flood control would be additional benefits.

The NRECA team considers this one of the most favorable projects and recommends that it be studied in detail. Special attention should be given to the available flow, foundation conditions for the dam, and economics. If the study results are favorable, this project should be built on a priority basis.

Longi Chara. The NRECA team was unable to see this site north of Chittagong and only the results of the committee survey can be reported.

The Longi has a catchment area of about 5 square miles and discharges into the Karnaphuli River. With a storage dam, the regulated average annual flow has been calculated to be 15 cfs. A low dam between two hills has been proposed at the point where the chara enters the plains. Moreover, a head of only 10 feet has been given. It would appear that a dam between the hills could create a higher head, especially since the maximum water depth is reported to be 6 feet. With the 10-foot head, only about 10 kW could be generated. Unless the head can be increased, the power and energy is considered too small for a government-sponsored project.

Dudia Chara. Since the NRECA team was unable to see this site, the following reports only the results of the committee survey.

The Dudia is a small stream with a very steep gradient (7-10 feet per mile) and a catchment area of about 2 square miles. Average regulated flow, by means of storage is 6 cfs throughout the year. At the proposed dam site each of Chittagong, the river section is reported to be 35 feet wide and 8 feet deep. The potential head has been estimated at 25 feet, which would permit the installation of a 10-kW unit. About 100 acres of virgin forest would be flooded by the reservoir and about 1500 acres could receive supplementary irrigation.

Unless the head and power output can be increased, this project is judged too small for consideration.

Sylhet District

This is an area of heavy rainfall--up to 200 inches per year. A number of small streams originate in the hills that form the border with India. Most of the drainage area above potential dam or barrage sites is therefore outside Bangladesh and presently unknown. Hydrologic data for the small stream as well as detailed maps do not exist. However, there are flow data for other streams in that area. Flows of the small rivers have therefore been very roughly approximated in the committee report by estimating the flow at the time of the survey team's visit in May and using the monthly flow distribution of the other streams for the remaining months of the year.

Attempts should be made to obtain maps of the drainage areas, especially since there appears to be a number of other rivers that the committee's survey group, and therefore the NRECA team, have not dealt with. Flows could then be calculated by correlating with gauged rivers. The flows could be empirically calculated on the basis of rainfall data and drainage areas, as was done for the Chittagong area streams.

Another small hydro possibility in the Sylhet area is the Monu Barrage near Moulvi Bazar. The NRECA team believes that power might be generated during the 7 or 8 months before and after the monsoon. At this time the barrage gates are closed, and head is available between upstream and downstream water levels. Although informed that no water releases to the river are planned during that time, the team believes there may be extended periods of excess flow which can be diverted into the irrigation canal and which will have to be released downstream. It is likely that water will have to be released to keep the downstream river alive. The barrage operation must be studied in more detail to determine whether a turbine-generator at the barrage is justified.

There appear to be no possibilities for power generation in the future Monu Canal because it goes through very flat country and no drop structures will be built.

Ranga Pani Gung (visited by NRECA team). The proposed dam site is about 2 miles from the Indian border, some 400 feet upstream from a bridge and near the village of Laksmipur. The area is flat and there is an extensive sand and gravel operation between the proposed site and the bridge. The slope of the river above and below the dam is reported to be 1.3 feet per mile, but it appears to be much steeper. The drainage area above the dam site is not known. Average and minimum flows have been roughly estimated in the committee report at 750 and 150 cfs. Large flash floods occur during the rainy season.

The committee report proposes an earth dam about 30 feet high at the dam site, but in the team's judgment neither an earth dam nor a barrage with earth bunds is possible. The team believes that any construction would require such an extensive erection of bunds as to make the project unfeasible. The team went upstream to the Indian border in search of a dam site but none was found. In sum, power generation on the Ranga Pani seems unfeasible.

Madhab Chara (visited by NRECA team). This project site southeast of Sylhet, and near the town of Juri, is unusual for two reasons. The entire drainage area is within Bangladesh, and the small river has a sheer waterfall with a drop of about 100 feet. It is also located in a tea plantation, and the waterfall is a tourist attraction.

Below the fall, the slope of the river bed is very steep (37 feet per mile), and a dam there would store very little water, besides being an environmental nightmare. The flow could probably be diverted above the falls into a near-vertical pipe to drive a turbine below, but this

also would destroy this unique and beautiful spot. It is recommended not to pursue this project.

Nikhari Chara (visited by NRECA team). The proposed dam site is about 3 miles north of the Madhab site in an area of steep tea plantation hills. The nearest powerline is about 3 miles away. The village of Manukata is downstream of the dam site, which has an estimated drainage area of 4 square miles, most of it in Bangladesh. At the dam site, the bed of the river has a very steep slope.

The site appeared quite favorable for an earth dam about 50 feet high at the maximum section. The river is about 15 feet deep, with some level floodplain on both sides, followed by steep hills. The length of the dam crest at the 50-foot level (35 feet above the banks and floodplain) is estimated to be about 500 feet. An adequate spillway for the flash floods would be needed. Behind the dam, there appeared to be room for an ample reservoir that would extend about 1.5 miles upstream. It is reported that some cultivated area, mostly tea gardens and some homes, would be flooded out but that the upstream area is very sparsely populated.

The average annual flow is estimated to be 17 cfs. Assuming adequate storage, this flow with a head of 40 feet would generate about 50 kW or 400,000 kWh throughout the year. Since the grid is 3 miles away, this could be an isolated, decentralized station with the energy going to the nearby village, tea plantations, and possibly some small industry. A-50 kW unit would be appropriate for this site.

It is reported that some 500 acres could receive supplementary irrigation. Flood protection and fish cultivation are additional benefits. This project should be studied in detail and implemented if the study results are favorable.

Monu Barrage (visited by NRECA team). This barrage on the Monu River near Moulvi Bazar is engineered and constructed by the Bangladeshi. The civil works are practically completed, and the river will be diverted through the eight bays of the barrage as soon as the roller gates are installed. Maximum flow of the river is 45,000 cfs, minimum flow 500 cfs. The main irrigation canal is designed for 500 cfs.

Power generation has not been contemplated at the Monu Barrage, and the NRECA team recommends that this possibility be investigated as soon as possible.

Since there will be very little difference between the upstream and downstream water levels during the high-flow months when the gates must be wide open, no head and no possibility for power generation will exist during these 4 to 5 months. However, the Bangladeshi expect that during the rest of the year, when the gates are lowered and the water headed up, no water will be released downstream and all flow will be diverted into the irrigation canal. During these 7 to 8 months, they anticipate there will be a difference of 10

to 15 feet between upstream and downstream levels. Thus, according to the Bangladeshi, during high flow there would be lots of water but no head for generation, and during low flow there would be head but no water for generation.

Though not privy to the river-flow data or the operation schedule for the barrage, the NRECA team believes that during the 7 or 8 low-flow months there will be long periods when the river flow exceeds the 500-cfs capacity of the irrigation canal. The excess flow must be released downstream and could be used for power generation.

Assuming arbitrarily a release of 200 cfs (partly to keep the river alive) and a head of 12 feet, about 160 kW could be generated. It is recommended that the economics of this possibility be studied. The study should focus on the amount and duration of excess flow, the available head during the excess flow releases, and the kWh that could be generated.

Mymensingh and Jamalpur Districts

A number of small and medium sized rivers originate in the Garo Hills of India and flow south into the flat lands of Bangladesh. Catchment areas above potential barrage sites are, for the most part, in India, and are therefore unknown. Discharge observations have been made for some of the rivers. For the others, flows have been roughly estimated. As with all the hill streams in Bangladesh, the bed slopes are fairly steep for some distance after the rivers leave the border foothills and level off in the Bangladesh plains. Flash floods with heavy silt loads are another common phenomenon. Two of the rivers were reported on by the committee's working group and visited by the NRECA team. Both had potential for barrages and small hydro generation. It appears that the other hill streams have similar potential.

Marisi River (visited by NRECA team). The Marisi River in Jamalpur District discharges into the Bhugai, which joins the Old Bramaputra. A barrage site has been proposed on the Marisi about 6 miles south of the Indian border, where the river bed is about 13 feet deep below well defined, steep banks. The river slope is 5.50 inches per mile at the proposed site that appeared to be quite favorable for a barrage. The team also saw the river 4 miles farther north, 2 miles below the border. Here the slope is even steeper, the width of the river narrower, and the banks nearly vertical. This appeared to be a better barrage site than the one proposed.

The river ungauged and maximum-minimum flows have been roughly estimated at 12,000 and 30 cfs. Records of the gauged small rivers in Bangladesh indicate that the average annual flow is about

5 to 10 times the minimum monthly flow. (See hydrology section.) It may therefore be roughly assumed that the average annual flow of the Marisi is 7.5 x 30 cfs or 225 cfs, or about 160,000 acre-feet per year.

Bunds can be built to a height of 10 feet above the banks (23 feet above the riverbed). This could create head for generation even during the monsoon months and storage for supplementary winter irrigation. (See section on Opportunities for Small Hydro.)

Assuming that the 4 month-long monsoon flow is 2.5 times the average flow or 560 cfs, and the head about 10 feet, 380 kW theoretically could be generated during this period. During the remaining 8 months when the flow would be about 54 cfs and the head 17.5 feet, 65 kW could be generated.

However, the actual generation would be different. Earlier in this report, it was outlined that turbines sized to four times the minimum flow would be justified. This would be 120 cfs for the Marisi. A 10-foot head and a flow of 120 cfs would produce 80 kW for 4 months, or 230,000 kWh. The balance of the monsoon flow would be released through the barrage. An 18 -foot head and a flow of 55 cfs would produce 65 kW for 8 months, or 370,000 kWh. The annual total would be 600,000 kWh.

No powerlines were seen near the site, so this may have to be an isolated, locally operated system for a number of villages. About 3000 acres could receive supplemental irrigation. Flood control would be an additional benefit.

Bhugai-Kangas (visited by NRECA team). The river discharges into the Bhugai. The bed is 12 feet below the banks, and like the Marisi, the river has steep, well defined banks. The proposed barrage site is about 8 miles south of the Indian border where the bed slope is 0.60 feet per mile. The site looked quite favorable, but a better one, with a steeper slope, probably could be located farther north.

Discharges have been measured, and maximum (flash flood) flow is 35,000 cfs, minimum flow is 70 cfs. Using the same assumption suggested for the Marisi, the average annual flow is 525 cfs or 380,000 acre-feet per year.

Bunds could be built 10 feet high above the banks to create head even during monsoon flows and storage for winter irrigation. Monsoon flows are estimated to be 1300 cfs, and flows for the remaining 8 months would average 130 cfs. Turbine would be sized for 4 x 70 cfs or 280 cfs.

A 10-foot head would permit 190 kW of power and 550,000 kWh of energy to be generated during the monsoon months. During the 8 remaining months, an 18-foot head would permit about 150 kW or 850,000 kWh of energy to be generated. Total energy would be about

1,400,000 kWh. The village of Simultala is one-half mile from the site and is supplied by a 11 kV line. Thus, the generated power could be linked to the grid.

About 3000 acres could receive supplementary irrigation. Flood control would be an additional benefit.

Other rivers. The committee report mentions five other rivers: the Nitai, the Bhutiakhali, the Karnachara, the Darang, and the Challakhalli. These rivers have not been surveyed but probably have potential similar to the Marisi and Bhugai-Kangas. The map shows still other mountain streams coming from the Garo Hills.

Rangpur-Dinajpur Districts

The situation is similar to that of the adjacent Mymensingh District. The rivers visited had fairly steep slopes, well defined, almost vertical banks at proposed barrage sites, and apparently favorable conditions for small barrages. The NRECA team visited six such sites in Dinajpur, as well as the Buree Barrage on the Suk River, which is already constructed. The visit to the Buree Barrage provided valuable information about local construction methods and costs for barrages and earth bunds.

Most of the rivers originate in India or traverse that country, so that drainage areas are not known. However, five of the six rivers have been gauged for a number of years.

A major barrage will be constructed in the Rangpur area on the Teesta River, a large tributary of the Bramaputra. Construction of the barrage has just begun, and the canals are in the design stage. Generating possibilities have been studied by Ateliers de Constructions Electriques de Charleroi (ACEC), a Belgian company. The generating potential at the barrage itself does not appear favorable, although low flow releases of 2000 cfs during the dry season may provide an opportunity for generation. However, small hydro generation amounting to over 10 MW appears possible on the main irrigation canals, which traverse terrain with a 2 foot per mile ground slope, and could have several drop structures. The amount of generation will depend on the height and number of drops erected in the canals.

Dakuk River (visited by NRECA team). The river is in the extreme northeast corner of Bangladesh that juts into India. At the proposed barrage site, the river is about 200 feet wide, bank to bank, with a vertical bank about 18 feet above riverbed on the east side. If a 15-foot-high barrage were built across the river, an earth bund about 10 feet high and 500-700 feet long would be required on the west side. The slope upstream of the barrage is about 2.5 feet per mile, and only marginal land would be flooded.

Discharges have been measured by means of a current meter, and a rating curve has been made, based on a downstream staff gauge. The minimum flow of 35 cfs occurs in April. Based on the assumptions

described for the Mymensingh rivers, the average annual flow would be 7.x x 35 (about 260 cfs), or 190,000 acre-feet per year. The average monsoon flow is estimated to be 650 cfs, and that for the remaining 8 months to be 65 cfs. Turbines would be sized for 4 x 35 (140 cfs).

Assuming an 8-foot head during the 4 months of high flow, the 140 cfs would generate about 75 kW or 200,000 kWh. With a 12-foot head and 65 cfs, for the rest of the year, 50 kW or 300,000 kWh could be generated. Total energy would be 500,000 kWh.

Supplementary irrigation and flood control would be additional benefits.

Chawai River (visited by NRECA team). The situation at the proposed Chawai Barrage site is the same as that of the Dukak, except that the Chawai is somewhat larger and its bed slope is 2 feet per mile. Here also a 15-foot-high barrage appears possible with an earth bund opposite to the vertical bank.

There are no discharge measurements, and the committee report estimates a minimum flow of 50 cfs. Based on the earlier described assumptions, the average annual flow would be 375 cfs or about 270,000 acre-feet per year. The flow would average about 940 cfs for 4 months and 94 cfs for 8 months. Turbines would be sized for 200 cfs.

During the 4 months of high flow, 100 kW and 300,000 kWh could be generated. During the other 8 months, the output would be 70 kW and 400,000 kWh. Total energy production would be 700,000 kWh. The power could be connected to the national grid at the nearby town of Panchagarh.

Supplementary irrigation and flood control would be additional benefits.

Talma River (visited by NRECA team). This appeared to be a considerably larger river, but the committee report gives the minimim flow as 35 cfs, the same as the Dahuk. At the proposed barrage site, the river was quite narrow and the banks steep on both sides. It is proposed that the high banks continue all the way upstream so that the storage would be confined to the river without inundating land.

Since our calculations are all based on the minimum flow, which is estimated to be 35 cfs, the same as the Dahuk, the power and energy output would be as for the Dahuk: 75 kW or 200,000 kWh for 4 months; 50 kW or 300,000 kWh for the remaining 8 months; or a total of 500,000 kWh for the year.

In the judgment of the NRECA team, the flows and power output may well be considerably greater, but there are no data to check this out.

Patraj River (visited by NRECA team). Like the previously described streams, the Patraj is a tributary of the Karatos river, joining it from the west. The proposed barrage site near the village of Fulbaria is quite remote and difficult to reach. The villages appeared to be nearer and the farmland richer than in other parts of Bangladesh, with good-looking fields of vegetables (egg plant), sugarcane, rice, and even banana plantations.

Discharge records of the Patraj River for 3 years indicate a minimum flow of 50 cfs in April, the same as for the Chawai River. Other conditions for a barrage also were quite similar to the other rivers in the Dinajpur area. Based on earlier described assumptions for the Chawai, the Patraj barrage could yield 100 kW and 300,000 kWh during the 4 high-flow months, and 75 kW or 400,000 kWh during 8 low-flow months. Total energy would be 700,000 kWh per year.

The market village of Fulbari could possibly use most of the generated energy. About 50 low-lift irrigation pumps are also reported to be in this area.

Punarbhaba (visited by NRECA team). The proposed barrage site is at a forested recreation area near the village of Singraban. This site did not appear very favorable because the river banks were quite low. Further, the average minimum monthly flow (April) over a 9-year period was only 12 cfs and in one year dropped to 5 cfs. The NRECA team recommends against developing this site.

Tangon River (visited by NRECA team). The site is at the village of Nargun, not far from the local WDB headquarters at Thakurgaon. The banks are high, and a 15-foot-high barrage would create substantial storage without flooding much valuable land. The committee report lists the minimum flow as 79 cfs. This appears high, and a flow of 50 cfs is probably more likely.

With a minimum flow of 50 cfs and the previously described assumptions, there would be a generation of 100 kW or 300,000 kWh during the 4 months of high flow. During the 8 months of low flow, 70 kW or 400,000 kWh of energy would be produced. Total annual energy would be 700,000 kWh. The turbines would be sized for 4 x 50, or 200 cfs. The grid could be joined at Thakurgaon.

Supplementary irrigation and flood protection would be additional benefits.

Teesta Barrage Project. The Teesta Barrage is presently being designed and constructed simultaneously in an accelerated program to provide year-around irrigation water from the Teesta River to the districts of Rangpur-Dinajpur and Bogra. The team was not able to visit the site but reviewed the plans with the WDB. The barrage is to be about 2000 feet long and will contain 44 gates that will head up the water 9 feet during low winter flows but can open to pass 360,000 cfs during the monsoon period. During the low-flow

period the project will be capable of diverting all the river flow into the Teesta Canal (capacity 9,000 cfs), but at least 2000 cfs must be released to the river to maintain its usefulness downstream. As determined from a tailwater rating curve, the available head would be 5 to 7 feet during that period. A 12,000-kW turbine could be installed in the barrage to run during the 5-month dry period and generate a minimum of 5 million kWh annually. Although construction is just beginning, the WDB engineers indicated strong reluctance to modify canal design to permit installation of the turbine. They gave the accelerated construction schedule as the reason for this reluctance.

However, there are other opportunities for hydropower in drop structures that must be built into the project's canals. The Teesta Canal travels west over level terrain for about 11 miles where the Dinajpur Canal offtakes and also flows west over fairly level terrain. From this point the Teesta Canal flows south for 12 miles over terrain that slopes 2 to 3 feet per mile. It then bifurcates to form the Bogra and Rangpur canals. Since the desired canal slope is 5 inches per mile, the excess drop must be dissipated. Over this 12-mile distance there is about 10 feet of excess head (allowing for canal friction losses), and this could be used for generation in one or two drops. Peak flow in this section is about 7300 cfs, which could furnish about 5000 kW of generation. The amount of electricity that could be generated annually, considering a probably flow-duration curve for the canal, is 36 million kWh. (See sample prefeasibility study, Appendix C.)

Along the Rangpur Canal a total of about 30 feet of excess head is available that could be divided into three to five drops. Along the Bogra Canal there is only 10 feet or so of excess head. On these canals, another 6400 kW of capacity could be installed which could deliver about 46 million kWh annually. There has been a preliminary assessment of power generation at the Teesta Project by ACEC of Belgian and by the WDB.

Table 1 summarizes the information in this section.

Table 1

Summary of potential small hydro sites*

Site no.	Name of river of barrage or canal	Probable flow for generation (cfs)	Probable head for generation (feet)	Probable duration of generation (months)
Chittagong District-Chittagong Hill Tract Area				
1	Faiz Lake	--	--	--
2	Chota Kumira**	11	40	12
3	Hinguli	12	15	12
4	Soalock	70	35	12
5	Longi	15	10	12
6	Dudia	6	25	12
Sylhet District				
7	Ranga Pani**	--	--	--
8	Madhab Chara**	--	--	--
	--at the falls	--	--	--
	--below the falls	--	--	--
9	Nikhari Chara**	17	40	12
10	Monu Barrage**	200	12	7
Mymensingh-Jamalpur District				
11	Marisi**	120	18	12
12	Bhugai-Kangsa**	280	18	12
Rangpur-Dinajpur Districts				
13	Dahuk**	140	12	12
14	Chawai**	200	12	12
15	Talma**	140	12	12
16	Patraj**	200	12	12
17	Punarbhaba**	--	--	--
18	Tangon**	200	12	12
Teesta Barrage Irrigation Project				
	Teesta Canal			
19	--Mile 23	7300	10	12
	Rangpur Canal			
20	--Mile 7	2500	10	12
21	--Mile 19	1800	10	12
22	--Mile 33	1100	10	12
	Bogra Canal			
23	--Mile 7	4000	10	12
24	Teesta Barrage	2000	7	7
Total				

* Does not include substantial number of sites that may have hydro potential.

** Visited by NRECA team.

Probable capacity (kW)	Annual energy (1000 kWh)	Type of installation	Comment
--	--	Existing storage dam	Not recommended (too small)
30	250	New storage dam	Regulated flows
12	100	"	"
170	1400	"	"
10	90	"	"
10	90	"	"
--	--	New barrage	Not recommended
--	--	Pipe bypass	Not recommended (environmental reasons)
--	--	New dam	"
50	400	New dam	Regulated flows
160	800	Existing barrage	Release excess water during (low-flow period)
80	600	Barrage with storage	Limited regulation
190	1400	"	"
75	500	Barrage with storage	Limited regulation
100	700	"	"
75	500	"	"
100	100	"	"
--	--		Not recommended
100	700	Barrage with storage	Limited regulation
5000	36000	Canal drop	See appendix
170			
1700	12000	"	
1250	9000	"	
750	5000	"	
2700	20000	"	
1200	5000	At barrage	Technical problems
12600	87000		

Characteristics, performance, typical arrangements

The major equipment item in any hydroelectric plant is the turbine generator. The remainder of the equipment serves to control, protect and provide services to the generating unit. Turbines and other kinds of equipment are pictured in figures 3 to 10. Turbine performance characteristics are summarized in table 2. For small, low-head hydro plants suitable for Bangladeshi conditions, the reaction type of hydraulic turbines is most frequently used. Reaction turbines include Francis and propeller-type units. Propeller turbines are subdivided into Kaplan units, tubular units, bulb units, and rim units. Both Francis and propeller turbines can be used in the relatively unsophisticated openflume (canal) configuration.

The other fundamental turbine type is the impulse wheel, which generally requires much higher heads than those available in Bangladesh. The only exception is the cross flow turbine (Ossberger, Banki, and Mitchell turbines), which is suitable for medium-low-head, small installations. Its main drawback is that the unit must be above the tailwater, and this may be impractical for low-head applications.

Francis turbines are available for heads of 5 meters (16.4 feet) and above. This makes them suitable only for hill sites in Bangladesh. They may drive the generator through a vertical or a horizontal shaft. The low turbine speeds increase the physical size and cost of the unit. Speed increasers may be used to permit higher speed, lower cost generators. However, this results in an additional cost for the speed increaser and lower efficiency of the total installation resulting from friction losses in the gear mechanism. Francis turbines may be installed with a penstock or in a canal. The wicket gates that control the water flow to the turbine runner, as well as the turbine bearings, are water lubricated. When the water carries heavy silt, as in the case for all streams in Bangladesh, excessive wear may occur. The efficiency drops off quite rapidly at lower than rated head and output. This also makes them less suitable for the highly variable river flows in Bangladesh.

Fixed-blade propeller turbines

Fixed-blade propeller turbines will operate at heads of 2 meters (6.5 feet) and above. Their efficiency drops off sharply at loads below rated capacity. This is unfavorable for Bangladeshi conditions.

Adjustable-blade (Kaplan) propeller turbines

Adjustable-blade (Kaplan) propeller turbines operate at heads of 2 meters (6.5 feet) and above. Their efficiency is good over a

Table 2
Typical turbine performance characteristics

Turbine type	Range of rated head (feet)	Permissible min/max variation from rated head (%)	Ranges of capacity (MW)	Permissible min/max variation of rated capacity (%)
Francis	16+	50-125	0.25+	35-115
Adjustable-blade propeller (Kaplan)	7+	45-150	1+	10-115
Tubular adjustable blades and fixed gates	7 to 60	65-140	0.25+	10-115
Tubular, fixed blades, and wicket gates	7 to 60	55-140	0.25+	10-115
Bulb	7+	45-140	1+	10-115
Rim	7 to 60	45-140	2 or less	10-115
Cross flow	7+	50-125	0.25 to 2	10-115
Francis or propeller in open canal	7 to 40	90-110	0.25 to 2	30-115

+ = or above

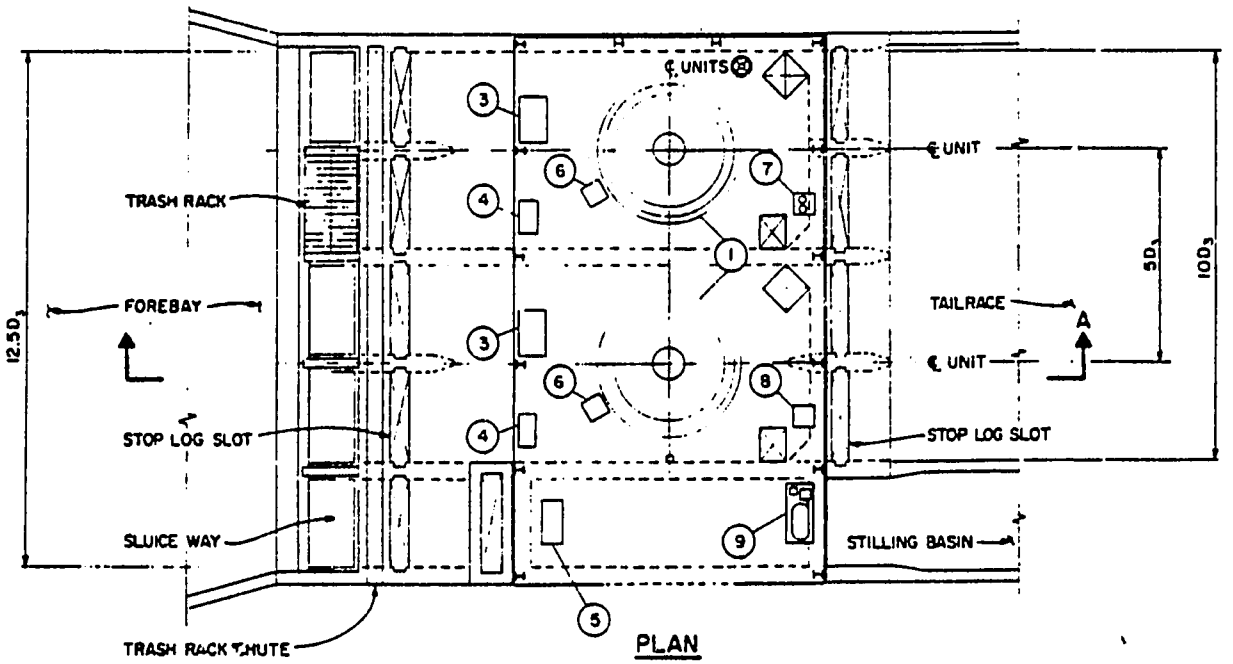

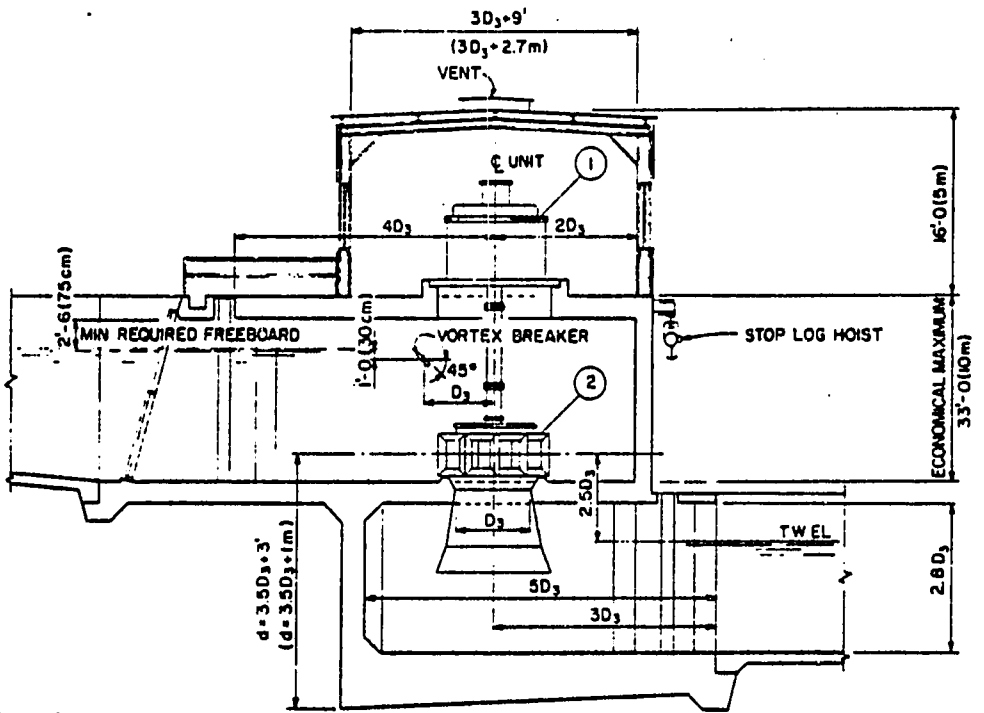

Equipment
1. Generator
2. Turbine
3. Governor
4. Generator Breaker
5. Control Panel
6. Neutral Ground Cubicle
7. Cooling Pumps
8. Sump Pumps
9. Air Compressor and Tank

NOTES:
1. Arrangement and equipment are schematic.
2. Layout, equipment and dimensions shown may vary according to site specific power plant conditions.

Figure 3 Powerhouse layout--open-flume turbine with bypass, multiple units

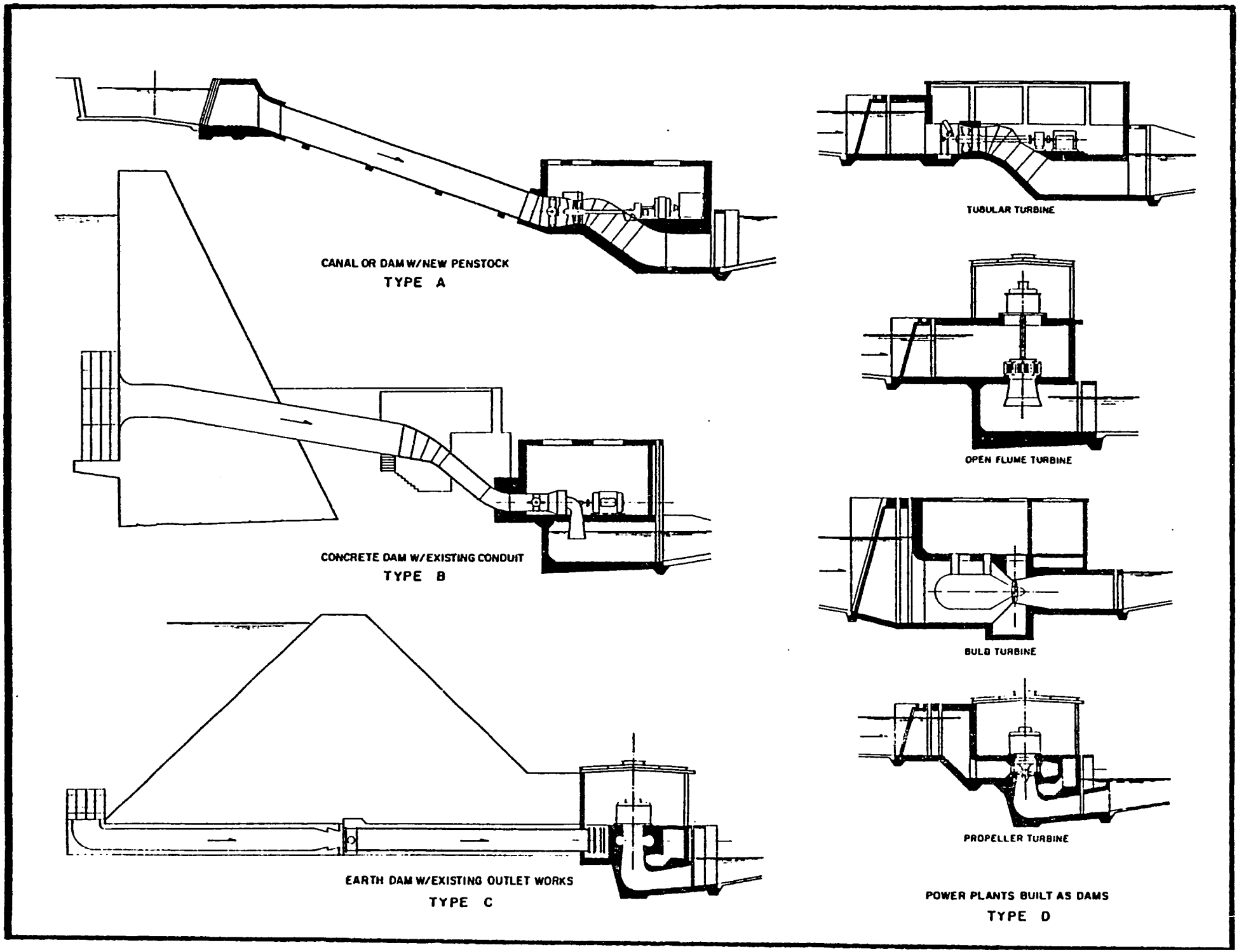

Figure 4 Standard project types

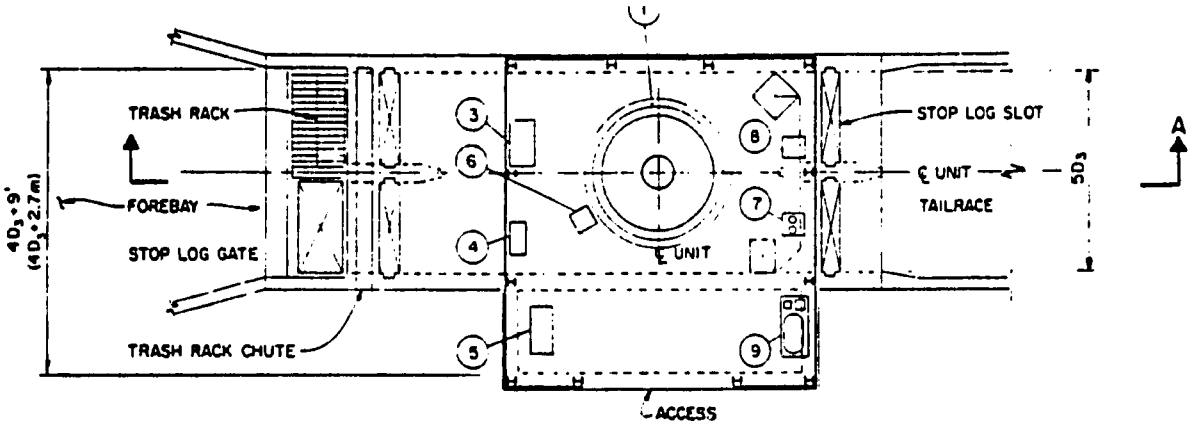

PLAN

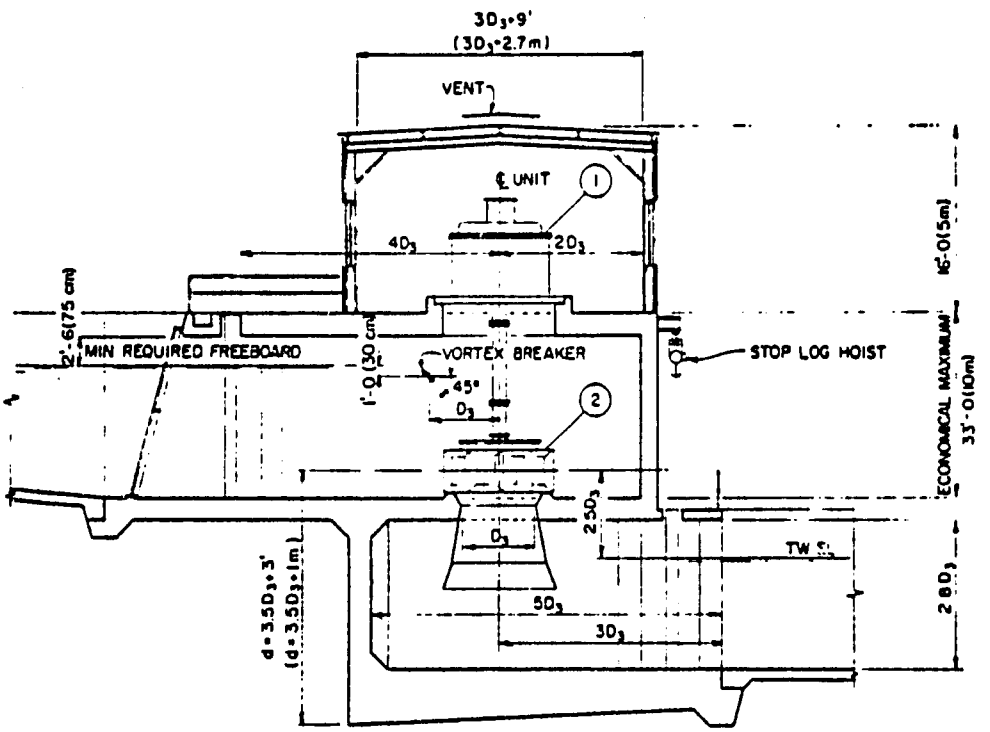

SECTION A

Equipment
1. Generator
2. Turbine
3. Governor
4. Generator Breaker
5. Control Panel
6. Neutral Ground Cubicle
7. Cooling Pumps
8. Sump Pumps
9. Air Compressor and Tank

NOTES:
1. Arrangement and equipment are schematic.
2. Layout, equipment and dimensions shown may vary according to site specific power plant conditions.

Figure 5 Powerhouse layout--open-flume turbine, without bypass

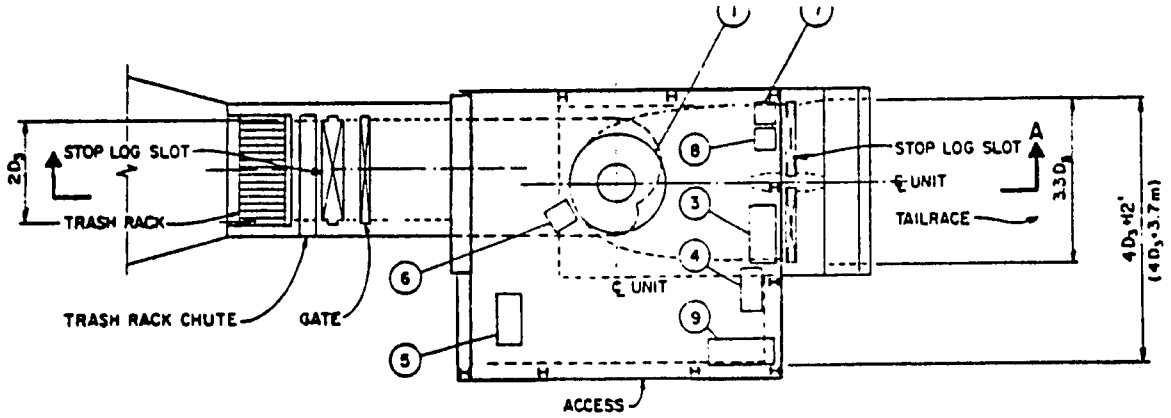

PLAN

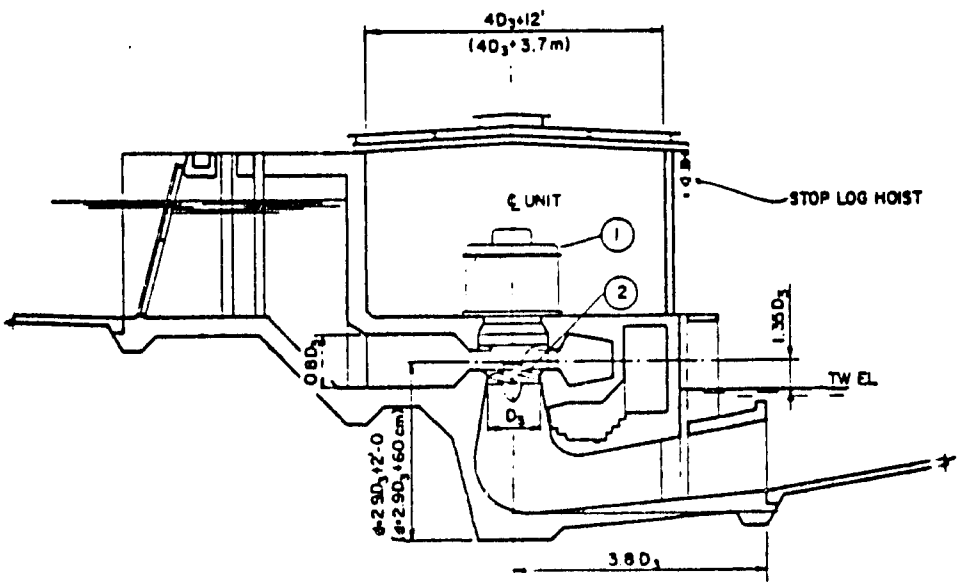

SECTION A

Equipment
1. Generator
2. Turbine
3. Governor
4. Generator Breaker
5. Control Panel
6. Neutral Ground Cubicle
7. Cooling Pumps
8. Sump Pumps
9. Air Compressor and Tank

NOTES:
1. Arrangement and equipment are schematic.
2. Layout, equipment and dimensions shown may vary according to site specific power plant conditions.

Figure 6 Powerhouse layout--propeller turbine with headworks

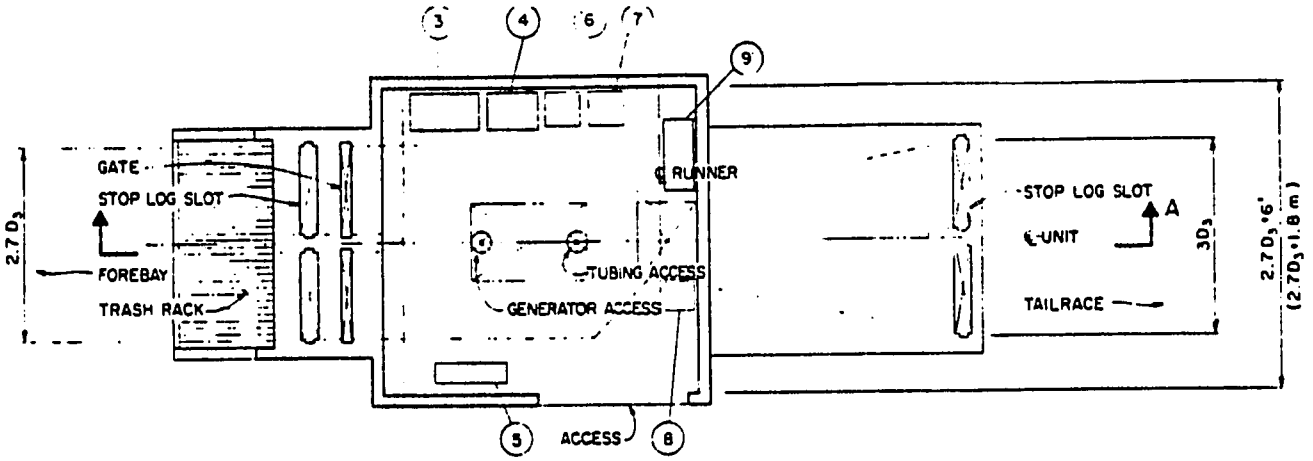

PLAN

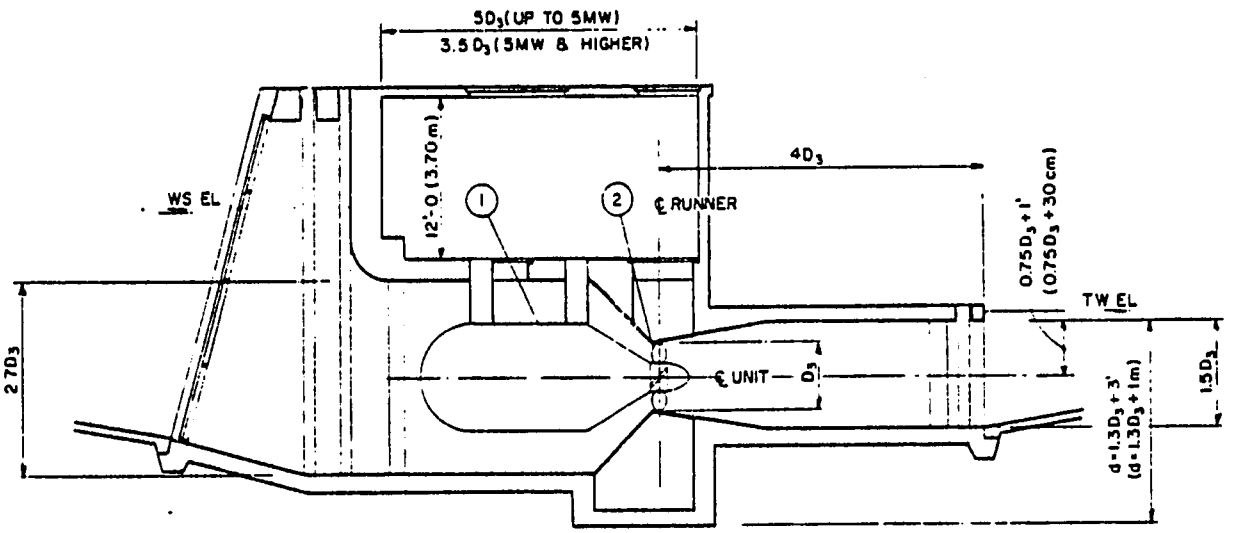

SECTION A

Equipment

1. Generator
2. Turbine
3. Governor
4. Generator Breaker
5. Control Panel
6. Neutral Ground Cubicle
7. Surge and Protection Cubicle
8. Sump Pumps
9. Air Compressor and Tank

NOTES:

1. Arrangement and equipment are schematic.
2. Layout, equipment and dimensions shown may vary according to site specific power plant conditions.

Figure 7 Powerhouse layout--bulb turbine with headworks

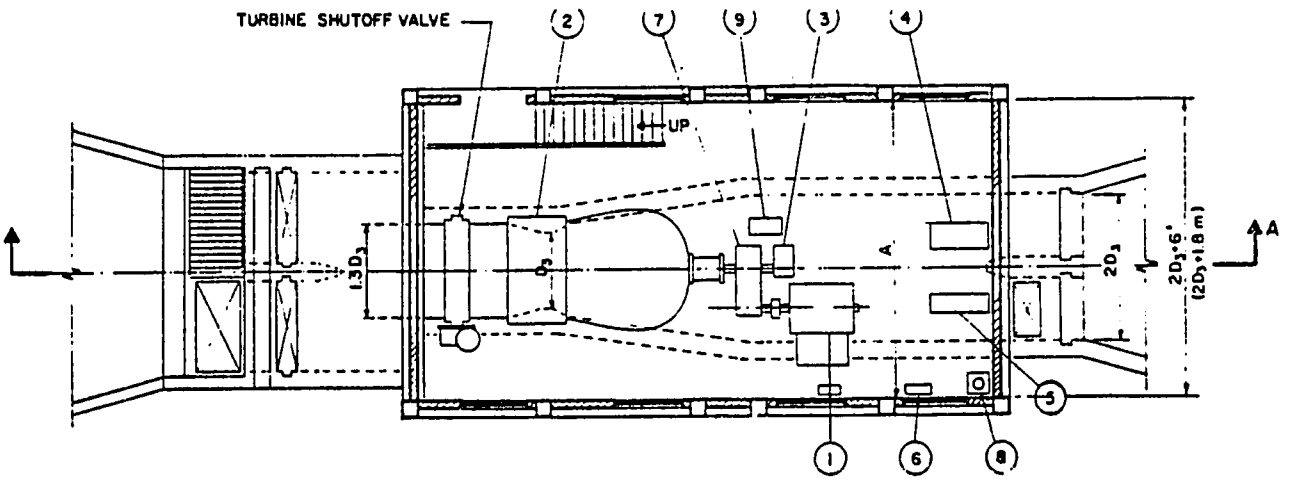

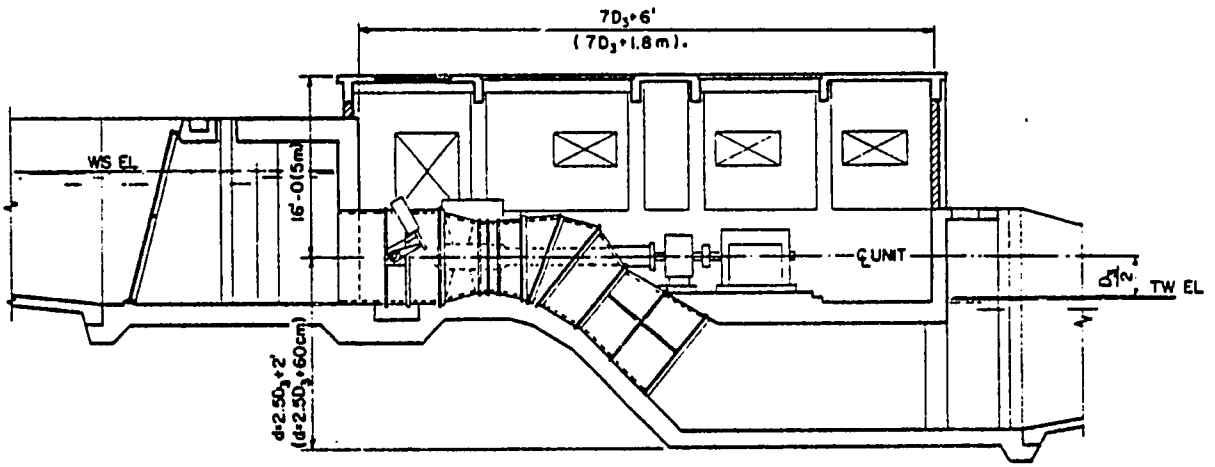

Equipment
1. Generator
2. Turbine
3. Governor
4. Generator Breaker
5. Control Panel
6. Neutral Ground Cubicle
7. Speed Increaser
8. Sump Pumps
9. Pressure Set

NOTES:
1. Arrangement and equipment are schematic.
2. Layout, equipment and dimensions shown may vary according to site specific power plant conditions.

Figure 8 Powerhouse layout--tubular turbine with headworks

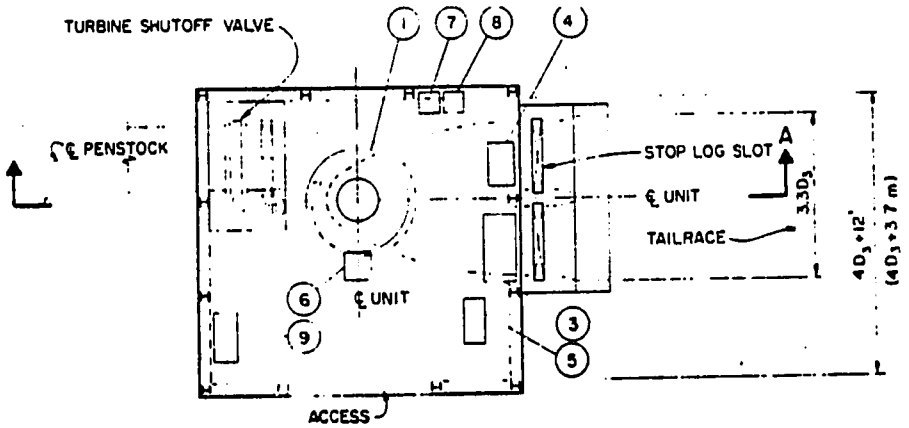

PLAN

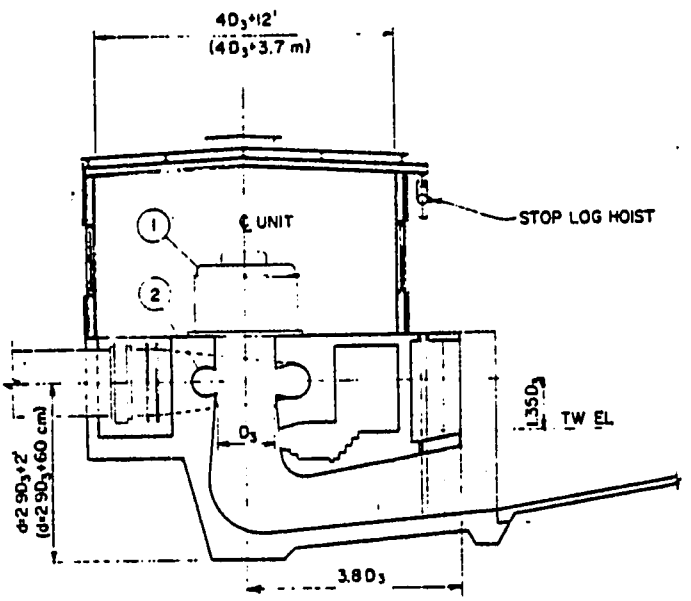

SECTION A

Equipment
1. Generator
2. Turbine
3. Governor
4. Generator Breaker
5. Control Panel
6. Neutral Ground Cubicle
7. Cooling Pumps
8. Sump Pumps
9. Air Compressor and Tank

NOTES:
1. Arrangement and equipment are schematic.
2. Layout, equipment and dimensions shown may vary according to site specific power plant conditions.

Figure 9 Powerhouse layout--vertical Francis turbine

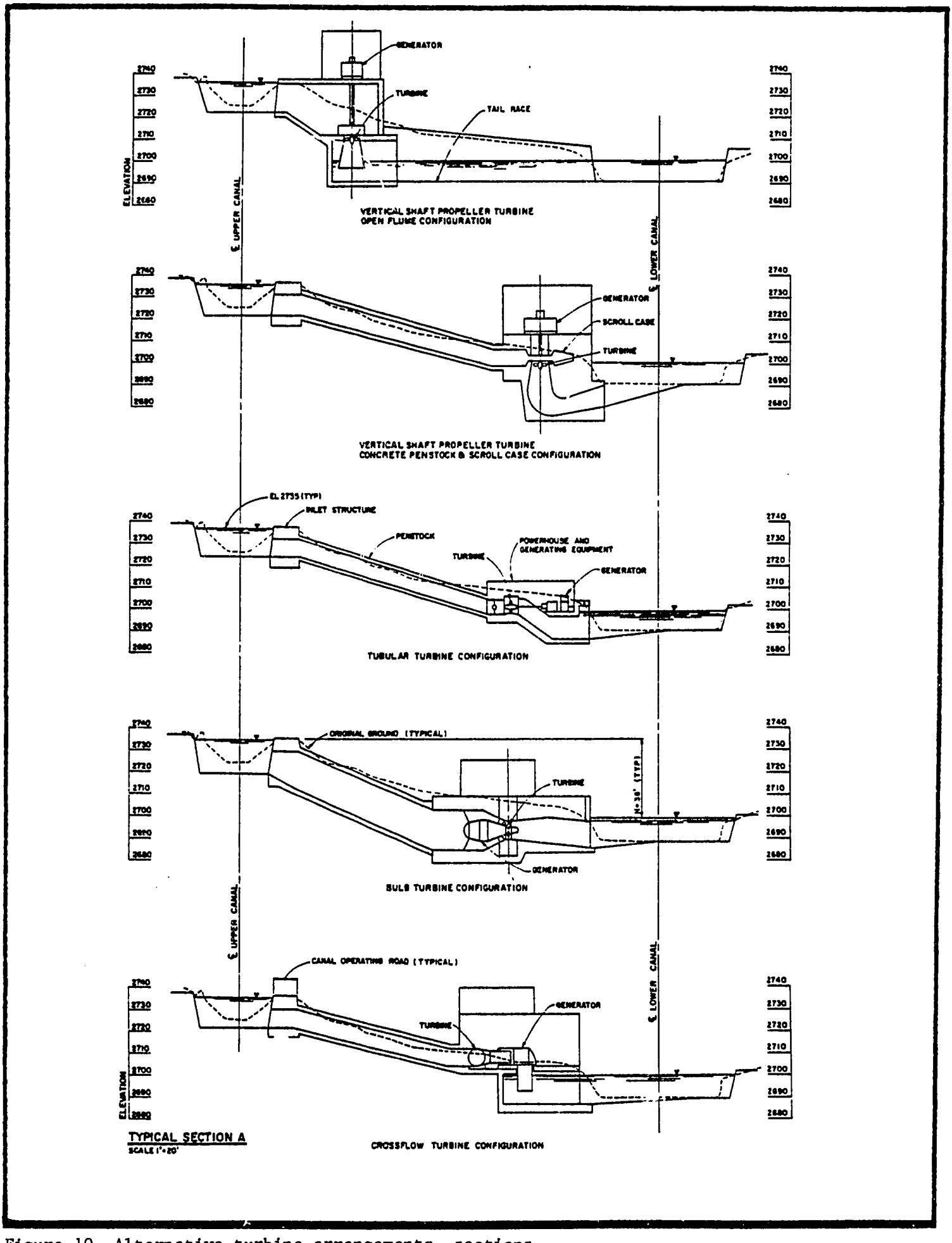

Figure 10 Alternative turbine arrangements--sections

wide range of heads and loads above or below the rated values. The installation may be with a penstock or in an open canal. The turbines on the Karnaphuli River are of the Kaplan type.

Tubular propeller turbines

Tubular propeller turbines operate at heads between 2 and 18 meters (6.5 and 18 feet). The turbine is within and the generator outside the water passage. The generator may be driven directly at turbine speed or through a speed increaser. Turbine blades may be fixed or adjustable. Adjustable blades provide good efficiency over a wide head and load range. Standardized units may be purchased from the manufacturer.

Open-flume propeller turbines

Open-flume propeller turbines are perhaps the simplest type of turbine, involving an upper open supply flume and a lower discharge flume connected by a vertical axis turbine. Though not so efficient as other turbines, they are easily installed and maintained. Efficiency can be improved by replacing the lower flume with an elbow draft tube. These turbines might be manufactured in the shipyards and other large workshops of Bangladesh that now produce ship propellers and low-lift pumps. Specialized designs might be required in keeping with manufacturing capabilities existing in Bangladesh, but this should not be a problem.

Bulb-propeller turbines

Bulb-propeller turbines operate at heads of (6.5 feet) and above. Both the turbine and the generator are inside the water conduit, the latter enclosed in a watertight "bulb." The requirement of having the generator above tailwater, which can be a problem for Bangladeshi conditions, therefore does not arise. The design results in a very compact powerhouse and the efficiency is excellent over a wide range of heads and load. The cost of the units is higher than that of tube turbines-generators because watertightness is required.

Rim-propeller turbines

Rim-propeller turbines or "Polar Turbines" operate under heads of from 2 to 15 meters (6.5 to 50.0 feet). They have the generator rotor mounted on the tips of the propeller and can be installed with a penstock or in a canal. The design of the units is highly specialized, and since few rim turbines are in operation, little performance data are available. It appears that rim turbines of up to 2000-kW capacity are in service and that their efficiency is good over a wide load range.

Crossflow-impulse turbines

Crossflow-impulse turbines are reported to operate at heads of (6.5 feet) and above, but at very low head they are much less

efficient than propellers. The low speed of the turbines results in a large physical size for low heads and large flows. Normally a speed increaser is installed to raise the generator speed. The units have few embedded parts and can be purchased in small packaged units. The efficiency appears to be satisfactory for a wide range over and below rated capacity, but few units are in operation and performance data are sparse.

The turbine governor is the primary controller of a small hydroelectric plant. It may be operated by manual or remote operation, by float-level control in the waterway, or by the water pressure in a conduit.

Synchronous generators are controlled through the excitation and voltage-regulation equipment. Coordination of the turbine governor and synchronizing equipment permits the startup of the unit, and controls the power and voltage output when the unit is on the line.

Small hydro plants do not require the complex and costly auxiliary control systems of large plants, because the small power output has little effect on the power grid to which it is connected. A non-speed regulating governor may be used for small plants. Its function is to bring the turbine to near synchronous speed for startup to regulate the load thereafter, and to shutdown the unit in emergencies.

Alternating-current generators can be of the synchronous or induction type and are available for indoor, outdoor, and even submerged service. Synchronous generators require an exciter and a voltage regulator and may be used in an isolated power system or in a large power grid. Induction generators cost less because they do not require exciters and voltage regulators. However, they must be connected to a grid system which provides the excitation. Normal generator voltage is 480 or 4160 V for small hydro stations.

Generators of small hydro installations are generally connected to the power grid through air-blast or vacuum-type circuit breakers. Small hydro stations use single two-winding, oil-filled transformers if they are connected to a higher voltage power grid. The insulating oil is pressurized with nitrogen.

Penstocks for low-head plants may be of reinforced concrete, cast in place concrete, or even special plastic pipe.

All small low-head power stations in Bangladesh will have to be built adjacent to an irrigation structure to make them economically feasible. Since the irrigation use will dominate, the stations must have a gated bypass for the periods when no power is produced.

Equipment manufacture and economics

The current trend is to standardize small hydro equipment instead

of custom manufacturing the components. For large hydro plants, every item must be specifically custom-made because every percent of efficiency represents a large financial benefit. For small installation, this is not the case. The components of a small hydro plant lend themselves better to standardization because of the relative simplicity of the equipment. Moreover, in small hydro projects, especially low-head project as in Bangladesh, the equipment represents a much larger portion of the total project cost than in large projects. The economics of hydropower favor high capacities and high heads. A cost analysis of small hydro projects in the United States shows the following breakdown:

Project design and management	10-15%
Civil construction and equipment installation	30-40%
Equipment manufacture and delivery	45-60%

Conditions in Bangladesh, differ from those in the United States. Civil construction, especially earthwork, is relatively cheap in Bangladesh, but there are no existing storage dams. Thus, almost every project undertaken will require a new small dam or barrage, thus increasing the cost of civil construction. In fact, the NRECA team concluded that, to be cost effective, the dam or barrage projects must be built as combination irrigation/power projects. Further, unless it can be manufactured in Bangladesh, costs of machinery will be increased by shipping fees and customs duties.

It appears that Bangladesh has the industrial capability to manufacture components. We have been told that tubewell turbine pumps of up to 2-cfs capacity are manufactured locally. So are low life centrifugal pumps up to 40-hp capacity, including electric motors and controls. The Chittagong shipyards manufacture large ship propellers. The jute mills and sugar mills are reported to have large, well equipped foundries and machine shops, and it is reported that all these facilities are busy only about 40 percent of the time.

Some turbine-generators such as the bulb and rim types may be too sophisticated for local manufacture. But it appears that the simpler types, or at least components of the machinery, could be produced in Bangladesh.

Before a program of small hydropower can be justified. there must be a reasonable relationship between benefits and costs. It is difficult to speak on an absolute benefit/cost ratio because some of the factors on both sides are intangible. The tangible benefits are the value of the generated capacity (kW) to help meet peak demands and the value of the energy (kWh) in replacing fuel. Since all of the sites visited were within several miles of at least 11-kV transmission lines, they can be evaluated as part of the national grids. The benefits of more remote sites, should they be established, may be evaluated according to the amount of costly diesel generating they replace.

The cost of fuel differs widely between the east and west grids, but the interconnector will balance this to some extent. An average of their two fuel rates is Tk. 1.25 per kWh.

At present, the REB (according to an NRECA spokesman) are charging their individual residential cunsumers Tk. 0.75 per kWh. This figure was widely quoted as a consumer rate in discussions with Bangladeshi engineers. On the basis of this, a rate of Tk. 1.25 per kWh seems a reasonable figure for energy value.

Generating capacity has value only if it is reliable. This dependable or firm value is not necessarily for 100 percent of the time. In the United States, small hydropower is generally considered firm if it is available 80 to 90 percent of the time. A value of capacity has been quoted by a Belgium firm in their report on the Teesta Barrage at Tk. 2000 per kW per year. This appears reasonable for a mxiture of stream, gas turbine, and diesel units.

The other benefits are intangible but important. The small hydropower projects will provide an impetus to new small industries and to additional irrigation through multiple-purpose features. This will improve rural conditions and diminish population flow to urban centers. It will also create a small, but meaningful, lessening of Bangladeshi dependence on imported fuels. It will provide an opportunity for Bangladeshi engineers and industry to gain experience in this technology, experience that can be put to use both within and without the country. Lastly, the completion of small hydropower-irrigation projects will improve flood control and fish cultivation.

Costs for small hydropower can be only very approximate at the reconnaissance level because a number of important factors are not yet determined. Costs to be considered include turbine/generator costs, station equipment costs, civil powerhouse costs, foundation costs, dam and spillway costs, transmission costs, and indirect costs such as engineering and maintenance.

Data on small hydropower costs applicable to the United States in 1978 are available, and these have been adjusted to Bangladeshi conditions and summarized in table 3. Twelve different conditions were considered as combinations of 10-, 20-, and 40-foot heads and 125-, 250-, 500-, and 1000-kW capacities. All costs are expressed as Tk. per kW so that the cost of different units can be readily compared. Four costs items are considered. The first, the turbine/generator set includes a control valve, a synchronous generator, and a speed governor, all installed. Costs were corrected to 1981 for inflation and 50 percent was added for freight and insurance. The second, electrical/mechanical components includes all equipment required in the powerhouse up to the switchyard (the switchyard and transmission lines are not included). The third, civil powerhouse costs, represent locally procured materials and labor. These costs were arbitrarily estimated at 50 percent of United States costs. These costs are exclusive of any spillway, embankment, and access costs. From table 3 it can be seen that the cost per kW increases substantially as the head and the capacity decrease. To these capital costs must be added annual costs such as maintenance and parts replacement, but these can be ignored in a reconnaissance survey.

A comparison of costs and benefits can be accomplished in several different ways, the simplest of which is to compare the annual repayment (amortization) of the investment with the annual benefits. The benefits are:

Value of capacity per kW	=	Tk. 2,000/kW
Value of energy at Tk. 1.25 per kWh	=	
x 8760 kWh per year per kW	=	Tk. 10,950/kW
Total annual benefits	=	Tk. 12,950/kW

The annual repayment of the cost of the most expensive powerplant tabulated (Tk. 100,000/kW), amortized over 25 years at 6 percent would be Tk. 8300/kW. This is considerably less than the total annual benefit per kW of generation given above. It indicates that the power and energy benefits would certainly repay the cost of the powerplant, although not necessarily the cost of the spillway and dam. A more detailed cost analysis would be required at the prefeasibility or feasibility levels, however, before firm decisions could be made. Higher interests rates would make the projects less attractive. On the other hand, inflation and higher energy costs would make them appear more attractive.

Table 3

Estimated small hydropower capital costs (1000 Taka per kW)

Capacity	10-foot head	20-foot head	40-foot head
125-kW unit			
Type of unit	Open flume (canal)	Horizontal Francis	Horizontal Francis
Turbine/generator	45	30	25
Electrical/mechanical	25	25	25
Civil powerhouse	25	15	7
Engineering, etc.	5	2	2
Total	100	72	59
250-kW unit			
Type of unit	Open flume (canal)	Vertical Francis	Horizontal Francis
Turbine/generator	35	25	20
Electrical/mechanical	17	17	17
Civil powerhouse	20	12	6
Engineering, etc.	4	3	2
Total	76	57	45
500-kW unit			
Type of unit	Open flume (canal)	Vertical Francis	Vertical Francis
Turbine/generator	30	30	15
Electrical/mechanical	11	11	11
Civil powerhouse	15	9	7
Engineering, etc.	3	2	2
Total	59	52	35
1000-kW unit			
Type of unit	(Too large for 10-foot head)	Tube turbine	Vertical Francis
Turbine/generator	--	20	12
Electrical/mechanical	--	7	7
Civil powerhouse	--	8	5
Engineering, etc.	--	2	1
Total	--	37	25

In addition to the costs shown in table 3, the following cost items that were important for this report, are listed below:

Earthwork (excavation, handling, placing, and compacting earth for bunds)	Tk. 100-200 per 100 cubic feet
Concrete, not reinforced, 1-2-4 mix	Tk. 3500 per 100 cubic feet

Concrete, reinforced, 1-2-4 mix	Tk. 4300 per 100 cubic feet
All civil construction, Teesta Barrage, (350,000 cfs capacity)	Tk. 1400 million
All civil construction, Monu Barrage, (45,000 cfs capacity)	Tk. 150 million
All civil construction, Burhee Barrage, (5000 cfs capacity)	Tk. 8.2 million

Reconnaissance evaluation of small low-head hydroelectric installations. Prepared by the U.S. Bureau of Reclamation by Tudor Engineering Company, 1981.

Mini hydro power generation in Bangladesh. Report of the Working Committee to the Bangladesh Water Development Board and the Bangladesh Power Development Board, August 1981.

Annual report, 1979-80, Bangladesh Power Development Board.

Prospect of low head hydropower generation in the irrigation canals, Teesta Barrage Project. Prepared by Samsur Rahman for the Bangladesh Water Development Board, March 1981.

Background notes: Bangladesh. U.S. Department of State, June 1981.

Prospect of small-scale hydro power development in Bangladesh. Syed T.S. Mahmood, United Nations Industrial Development Organization, May 22, 1981, 19 pages.

Prospect of mini hydro power development in Bangladesh. W. Choudhari, UNIDO Seminar Workshop on Mini Hydro Electric Generation Units, Kathmandu, Nepal, September 1979.

Polar wheel bulb units hydropower generation, Teesta Barrage Project. Report prepared by Ateliers de Constructions Electriques de Charleroi, Belgium, for the Ministry of Power Water Resources and Flood Control, Dacca, October 1980, 35 pages.

Rural electrification feasibility study. Volumes I, II, III. Prepared by CAI and NRECA for Bangladesh Power Devolopment Board, 1978.

The importance of standardization in the development of small hydroelectric sites. G. E. Pfafflin, Allis-Chalmers Corp., CEA Annual Meeting, Vancouver, B.C., March 1979.

Standardized hydroelectric generating units. Allis-Chalmers product brochure.

Water resources planning for regional development of Bangladesh. Liaquat Hossain, masters thesis, Bangladesh University of Engineering and Technology, 1974.

Example of appraisal of prefeasibility assessment of small hydropower on the Teesta Canal

---

The purpose of an appraisal of prefeasibility assessment is to determine from readily available information whether the proposed project is likely to be technically and economically feasible to the extent it merits a full feasibility investigation. The 23-mile-long Teesta main canal is presently under design. It is to take irrigation water from the Teesta River upstream of the Teesta Barrage and deliver it to three main offtake canals and several lesser distributory canals. Because of the difference in the slope of the ground and the slope of the water, there are roughly 10 feet of excess head that could be used to generate electric power. This appraisal is limited to the generation that could be developed in this stretch of the main canal. It was not possible to verify all data in the time available, and the data is subject to change as the canal design progresses. The purpose of this assessment is mainly to demonstrate the method to be used.

Two possible schemes on the main canal will be appraised. There are additional generating possibilities on the Rangpur and Bogra offtake canals that should be similarly analyzed.

Flows available

The canal headworks has a capacity of 9000 cfs, but since there is no storage at the barrage it can only accept as much water as the river supplies. Also, a minimum of 2000 cfs must be left in the river to supply downstream uses. The average monthly flows to the Teesta Canal shown below are based on 1951 to 1978 average river flows:

Month	Average river flow (cfs)	Downstream river flow (cfs)	Teesta Canal flow (cfs)
January	6200	2000	4200
February	5300	2000	3300
March	6000	2000	4000
April	8700	2000	6700
May	17100	8100	9000
June	45800	36800	9000
July	75300	66300	9000
August	82600	73600	9000
September	55600	46600	9000

Month	Average river flow (cfs)	Downstream river flow (cfs)	Teesta Canal flow (cfs)
October	31000	22000	9000
November	13500	4500	9000
December	8600	2000	6600

Two possible schemes are available--one plant at Mile 23 or two plants, one at Mile 17 and another at Mile 23. Withdrawals and seepage losses up to Mile 17 amount to 1600 cfs (includes Dinajpur Canal) or 18 percent of the full supply flow. Withdrawals and losses up to Mile 23 amount to 1800 cfs or 20 percent of the full supply flow. The monthly flows at the sites based on these percentage withdrawals are:

Month	Teesta Canal flow (cfs)	Withdrawal to Mile 17 (cfs)	Flow at Mile 17 (cfs)	Withdrawal to Mile 23 (cfs)	Flow at Mile 23 (cfs)
January	4200	800	3400	900	3300
February	3300	600	2700	700	2600
March	4000	700	3300	800	3200
April	6700	1200	5500	1300	5400
May to November	9000	1600	7400	1800	7200
December	6600	1200	5400	1300	5300

Heads available

There are several checkpoints in the canal where water levels must be maintained in order to command the surrounding terrain. The pertinent ones here are at Mile 11 (elevation 162 feet) and Mile 23 (elevation 145 feet), giving a total drop of 17 feet. The canal slope at full supply flow is 0.42 feet per mile and varies as the square of the discharge. If only one power plant is placed at Mile 23, there must be an additional cross regulator at Mile 17 to maintain the level upstream at Mile 11 when slopes are low. The heads available for generation are as given below and are based on the assumption that the head on the plants could increase 2 feet during low flows to help compensate for reduced slopes.

Scheme 1 Power Plant at Mile 23

Month	Friction loss (feet)	Mile 17 drop (feet)	Head on plant at Mile 23 (feet)
January	1.0	4.0	12.0
February	0.7	4.3	12.0
March	1.0	4.0	12.0

Month	Friction loss (feet)	Mile 17 drop (feet)	Head on plant at Mile 23 (feet)
April	2.8	2.2	12.0
May to November	5.0	2.0	10.0
December	2.7	2.3	12.0

Scheme 2 Power Plants at Mile 17 and Mile 23

Month	Friction (feet)	Head on Mile 17 Plant (feet)	Head on Mile 23 Plant (feet)
January	1.0	8.0	8.0
February	0.7	8.1	8.2
March	1.0	8.0	8.0
April	2.8	7.1	7.1
May to November	5.0	6.0	6.0
December	2.7	7.2	7.1

Plant capacity

The plant capacity would be established for May to December flows using the formula kW = Q x H x efficiency ÷ 11.8

For Scheme 1, the Mile 23 plant would be sized at kW = 7200 x 10 x 0.80 ÷ 11.8 = 4800 kW (say 5000 kW) assuming 80% efficiency.

One choice appropriate for Bangladesh would be ten open-flume turbines rated at 500 kW at 10 feet of head. These would be cheaper units and would be simpler to install and maintain than five turbines at 1000 kW each. The firm capacity would be the capacity during the low-flow month of February, or 2100 kW.

For Scheme 2, each plant would be sized at kW = 7400 x 6.0 x 0.80 ÷ 11.8 = 3010 kW (say 3000 kW)

Each plant could contain 12 open flume units rated at 250 kW at 6 feet of head. The firm capacity per plant based on February flows would be 1450 kW or 2900 kW total. The large number of 250-kW units has been selected because 500-kW units would be physically too big at the 6-foot head.

Energy output

Scheme 1 annual energy output

Month	Hours	kW	kWh x 10^6
January	744	2700	2.0
February	672	2100	1.4
March	744	2600	1.8
April	720	4400	3.2
May to November	5136	4900	25.2
December	744	4300	3.2
Total	8760		36.8

Scheme 2 annual energy output

		Mile 17 Plant		Mile 23 Plant	
Month	Hours	kW	kWh x 10^6	kW	kWh x 10^6
January	744	1850	1.4	1800	1.3
February	672	1500	1.0	1450	0.9
March	744	1800	1.3	1750	1.3
April	720	2600	1.9	2600	1.9
May to November	5136	3000	15.5	2900	15.0
December	744	2600	2.0	2550	1.9
	8760		23.1		22.3

Scheme 2 Total: 45.4 x 10^6 kWh

Annual benefits

The annual benefits for Scheme 1 are--

Firm capacity 2100 kW at the rate of Tk. 2000/kW = Tk. 4,200,000
Energy - 36.6 x 10^6 kWh at the rate of Tk. 1.25/kWh = Tk. 45,800,000
Total annual benefits for Scheme 1

The annual benefits for Scheme 2 are--

Firm capacity - 2900 kW at the rate of Tk. 2000/kW = Tk. 5,800,000
Energy - 45.4 x 10^6 kWh at the rate of Tk. 1.25/kWh = Tk. 56,800,000
Total annual benefits for Scheme 2 Tk. 62,600,000

Capital costs

The capital costs include the powerhouses with turbines, etc., and the higher embankments due to increased canal levels. These costs are appraised below.

Scheme 1 powerhouse and turbines, etc.

This assessment is based on ten open-flume turbines rated at 500-kW at 10 feet of head and 750 cfs of flow. A typical powerhouse layout is shown in figure 12. The runner is a fixed-blade propeller. The guide vanes are also fixed. Speed regulation would be accomplished by a load governor or by using an induction generator connected to the grid. The number of units operating would depend on the canal flow and would be controlled by closing the upstream gates of unneeded units.

The basic dimension is the runner diameter which comes to 6.25 feet or about 2000 millimeters.

Other dimensions, from figure 12 are--

N = Minimum width centerline to centerline 3.5 x 6.25 = 22 feet
C = Overall length of powerhouse 7.5 x 6.25 = 47 feet
G = Height of runner above draft tube floor 2.7 x 6.25 = 17 feet

The cost for the turbine, generator, speed increasing gears, and governor (all installed) are given in figure 13 as $450,000 US in 1978. Allowing 20 percent for inflation, 50 percent for freight and insurance, and converting to Taka at 18 Taka per $1.00 US gives--

Cost of one turbine set = 450,000 x 1.20 x 1.50 x 18
= Tk. 15,000,000 each
Cost of ten turbine sets = Tk. 150,000,000 each
The electrical costs are obtained from figure 14
Cost for 5-MW plant = 300,000 - 60,000 = $240,000
Cost for 10 500-kW units = 10 x 35,000 = 350,000
Total $590,000

Cost of electrical equipment = 598,000 x 1.2 x 1.5 x 18 = Tk. 20,000,000

The civil powerhouse cost is obtained from figure 15. For multiple units having a runner diameter of 6.25 ft it is $300,000 US per unit or $3,000,000 total. In Bangladesh it is estimated that civil works are 50 percent cheaper:

Civil powerhouse cost = 0.5 x 3,000,000 x 18 = Tk. 27,000,000
Engineering costs and contingencies are rated at 20 percent of civil costs = Tk. 5,000,000
Total powerplant costs, Scheme 1 = Tk. 202,000,000

Scheme 2 powerhouse and turbine, etc.

This assessment is based on 24 open-flume turbines rated at 250 kW at 6 feet of head and 750 cfs of flow. The runner diameter is 5.25 feet or about 1500 millimeters. Other dimensions from figure 12 are--

N = Minimum width, centerline to centerline = 3.6 x 5.25 = 19 feet
C = Overall length of powerhouse = 8.5 x 5.25 = 45 feet
G = Height of runner above draft tube floor = 2.7 x 5.25 = 14 feet

Turbine costs are obtained from figure 13 as $400,000 US each, therefore--

Cost of one turbine set = 400,000 x 1.20 x 150 x 18 = Tk. 13,000,000
Cost of 24 turbine sets = Tk. 300,000,000
Electrical costs are obtained from figure 14
Cost for two 300-kW plants = (300,000 = 45,000) x 2 = $510,000 US
Cost for 24, of 250-kW units = 24 x $25,000 US = $600,000 US
Total = $1,110,000 US

Cost of electrical equipment = 1,110,000 x 1.20 x 1.50 x 18 = Tk. 36,000,000

The civil powerhouse costs obtained from figure 15 for multiple units having a runner diameter of 5.25 feet is $250,000 per unit or $6,000,000 US for 24 units.

Powerhouse costs = 6,000,000 x 0.5 x 18 = Tk. 54,000,000
Engineering costs and contingencies at 20 percent of civil costs = Tk. 11,000,000
Total powerplant costs, Scheme 2 = Tk. 401,000,000

Extra canal costs

The canal cross section has not been finalized but a canal 200 feet wide at the bottom, 15 feet deep, and 1.3 feet wide side slopes would be representative for these flows. A cross section is shown in figure 16 with cut and fill balanced at 1550 cubic feet of length. The amount of excavation per mile is 8,200,000 cubic feet. The costs are about Tk. 100 per 1000 cubic foot excavated. The excavation costs for the canal are therefore about Tk. 800,000 per mile. The water level for a balanced canal is 8 feet above the ground. Both higher water levels and lower water levels will cost more because either excavation or fill will be increased.

Scheme 1 will increase water levels 4 feet, but only between Mile 17 and Mile 23. The extra costs for these 5 miles are appraised to be about Tk. 12,000,000. There would be extra costs also for raised bridges, but these are thought to be relatively small. For Scheme 2, the water levels will not be much different than without power and no extra costs were appraised.

Extra regulator costs

The cost for cross regulators on the Teesta Canal can be approximated using costs for the Teesta, Manu, and Buree control structures--

	Design flow	Cost
Teesta	350,000 cfs	Tk. 1400,000,000
Manu	45,000 cfs	149,000,000
Buree	5,000 cfs	8,200,000
Interpolating these cost gives:		
Teesta Canal regulator	7,400 cfs	14,000,000

Where the regulator is to be replaced with a powerhouse, additional bypass sluices would be provided as shown in figure 16. For Scheme 1 there would be nine sluices, each 11 feet wide, one between each pair of turbines. The total width of the structure would be: 9 x 11 + 10 x 22 = 319 feet. This would probably require expanding the width of the canal upstream and downstream of the structure. However, it is not considered that the nine sluices will be more costly than one regulator. For Scheme 2, there would be 11 sluices, each 9 feet wide, one between each pair of turbines. The total width of the structure would be: 11 x 9 + 12 x 19 = 327 feet. Again, no significant extra cost is expected.

Annual operating costs

At the appraisal level it is sufficient to assume the operating and maintenance costs to be 1 percent of capital costs, or Tk. 2,000,000 for Scheme 1 and 4,000,000 for Scheme 2.

Benefit cost ratios

To compare costs and benefits, the annual costs and benefits can be brought to a lump-sum basis by computing their present worth. The discount rate chosen was 6 percent, and the life of the project taken as 25 years. The multiplication factor for converting annual costs to their present worth at 6 percent and 25 years is 12.0.

Benefit cost ratio for Scheme 1

Capital cost of powerplant	Tk. 202,000,000
Extra capital cost of embankment	Tk. 12,000,000
Extra capital cost of regulator	-
Present worth of operation cost	Tk. 24,000,000
Total cost	Tk. 238,000,000

Present worth of benefits = 12 x 50,000,000 = Tk. 600,000,000

Benefit cost ratio for Scheme 1 $= \frac{600,000,000}{238,000,000} = 2.52$

Benefit cost ratio for Scheme 2

Capital cost of powerplants	Tk. 401,000,000
Extra capital cost of embankment	-
Extra capital cost of regulator	

Present worth of operating cost = 12 x 4,000,000	48,000,000
Total cost	Tk. 449,000,000
Present worth of benefits = 12 x 62,000,000	Tk. 751,000,000

Benefit cost ratio for Scheme 2 = $\frac{751,000,000}{449,000,000}$ = 1.67

In summary, Scheme 2 produces more power but has a lower benefit to cost ratio. As mentioned in the main report, a higher interest rate would lower the benefit cost ratio and inflation would increase the ratio.

Secondary considerations

The higher embankments needed for Scheme 1 will increase seepage somewhat and would be more serious in the event of a breach. These aspects need to be considered further in a feasibility study before either scheme is adopted. Different turbine sizes or types might be more economical. Because the greatest cost lies in the turbines, firm manufacturers' quotes and recommendations should be obtained at the feasibility study level. Also, the other drop structures on the Rangpur and Bogra canals system should be considered as additional sites, and the possibility of using a single sized turbine for all should be explored. Open-flume propeller turbines are particularly straightforward and the possibility of manufacturing all or part in Bangladesh should be seriously investigated. This may require some redesign to meet Bangladesh capabilities.

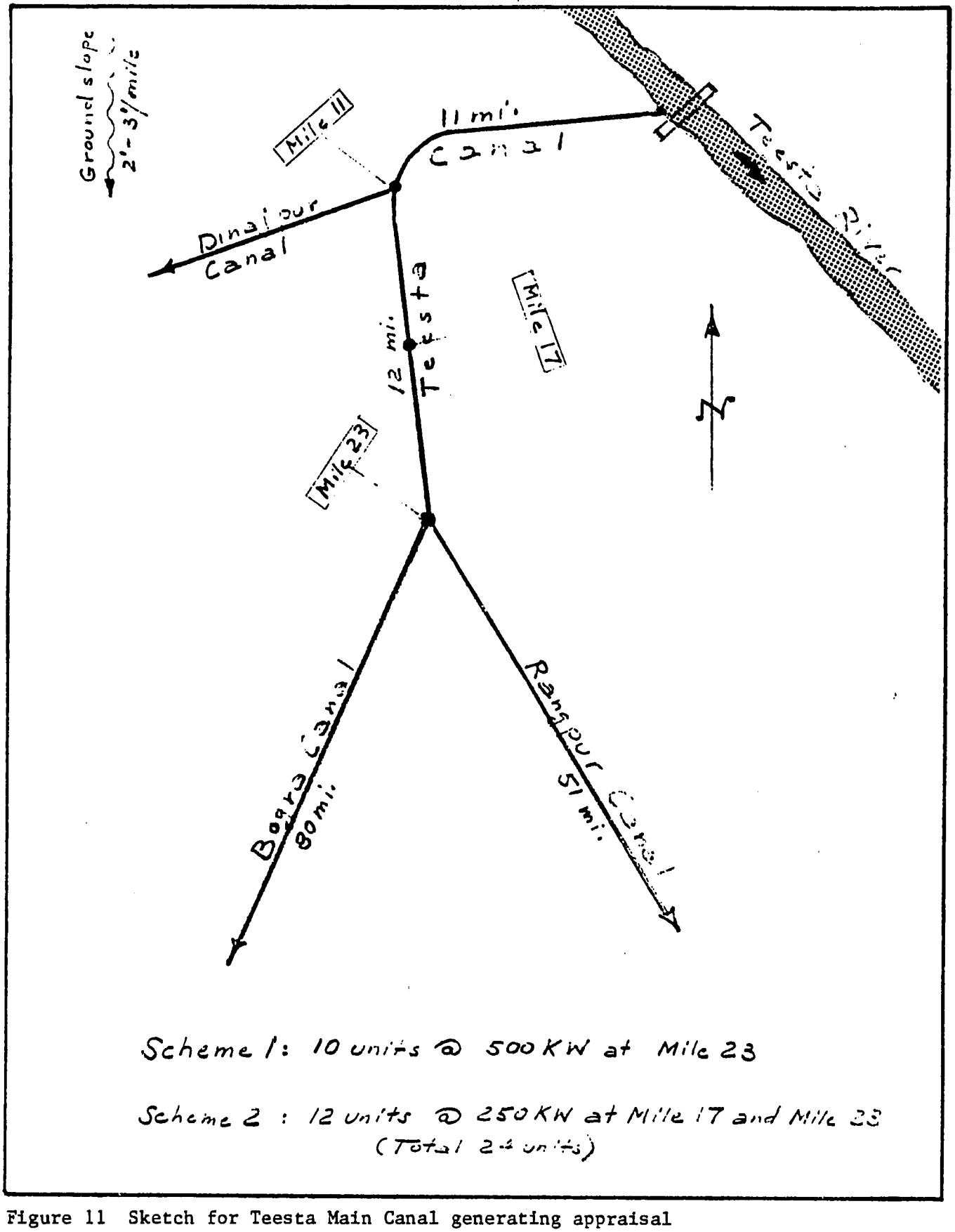

Figure 11 Sketch for Teesta Main Canal generating appraisal

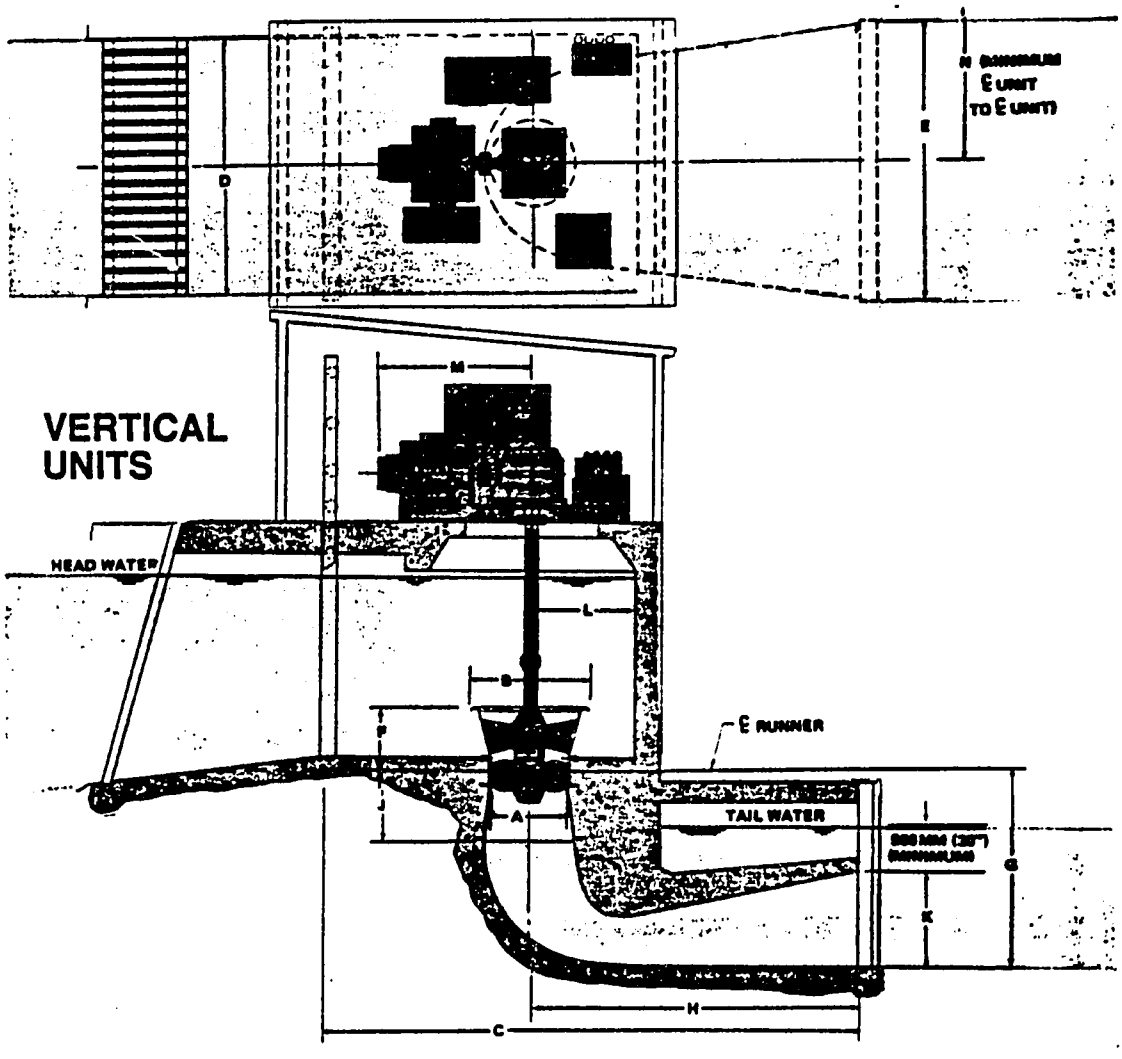

BASIC DIMENSIONS

A = Runner Diameter in millimeters (inches) = 1.00

All Other Dimensions Are In Proportion From Runner Diameter

A	750 (29.5)	1000 (39.4)	1250 (49.2)	1500 (59.6)	1750 (68.9)	2000 (78.7)	2250 (88.6)	2500 (98.4)	2750 (108.3)	3000 (118.1)
B	1.4	1.4	1.4	1.4	1.4	1.4	1.4	1.4	1.4	1.4
C	10.0	9.5	9.0	8.5	8.0	7.5	7.0	6.5	6.5	6.5
D	3.0	3.0	3.0	3.0	3.0	3.0	3.0	3.0	3.0	3.0
E	3.2	3.2	3.2	3.2	3.2	3.2	3.2	3.2	3.2	3.2
F	0.8	0.8	0.8	0.8	0.8	0.8	0.8	0.8	0.8	0.8
G	2.7	2.7	2.7	2.7	2.7	2.7	2.7	2.7	2.7	2.7
H	4.0	4.0	4.0	4.0	4.0	4.0	4.0	4.0	4.0	4.0
J	0.9	0.9	0.9	0.9	0.9	0.9	0.9	0.9	0.9	0.9
K	1.2	1.2	1.2	1.2	1.2	[illegible].2	1.2	1.2	1.2	1.2
L	1.4	1.4	1.4	1.4	1.4	[illegible]4	1.4	1.4	1.4	1.4
M	4.0	3.8	3.5	3.3	3.0	2.8	2.5	2.3	2.3	2.2
N	4.2	4.0	3.85	3.7	3.6	3.5	3.45	3.4	3.35	3.3

NOTE: Dimensions are approximated and may vary for specific applications.

Figure 12 Typical powerhouse layout and basic dimensions

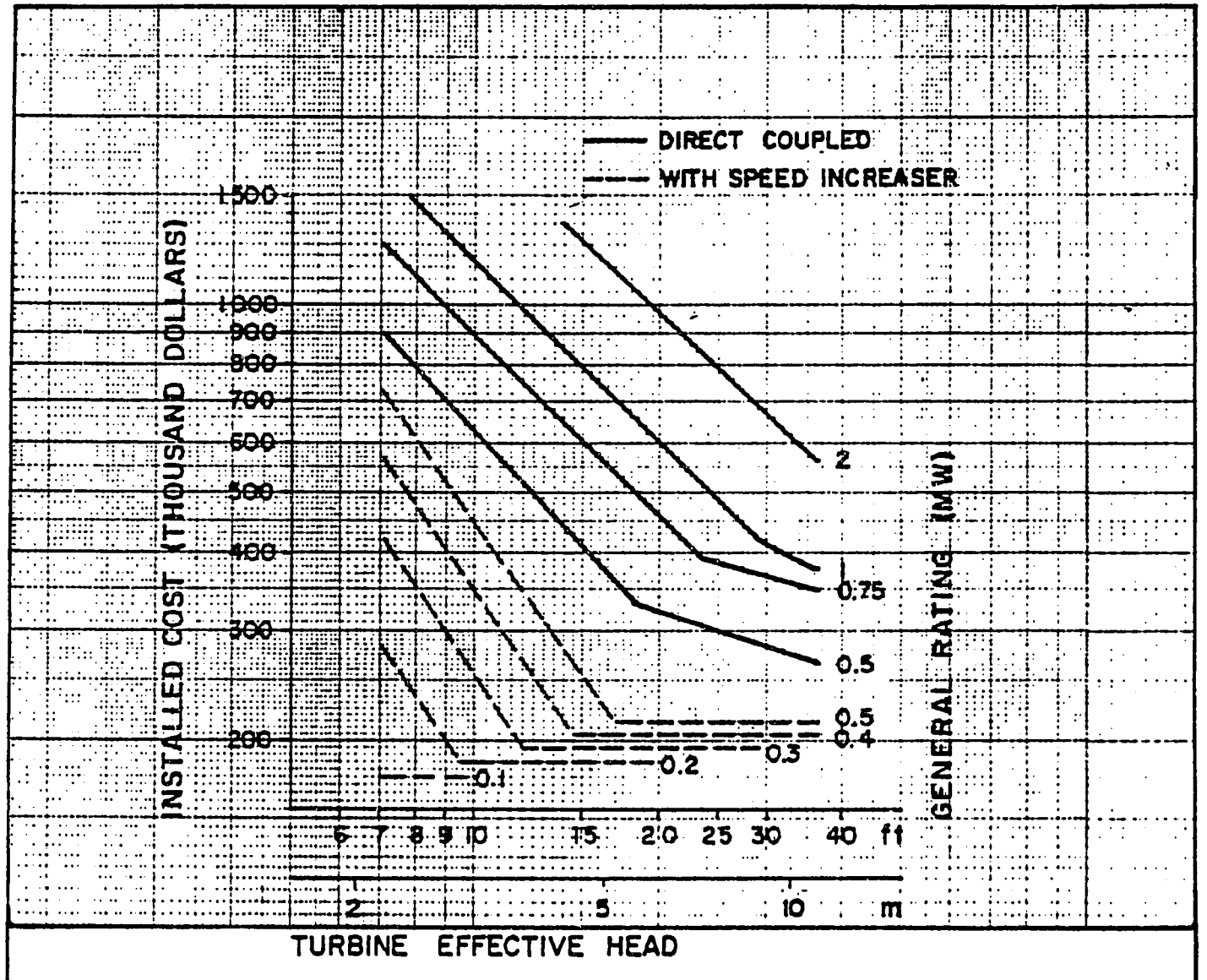

NOTES:

1. The estimated costs are based upon a typical vertical propeller turbine, coupled to the generator through a speed increaser.
2. Costs include a turbine with fixed blade runner and wicket gates, synchronous generator, speed regulating governor, speed increaser and installation.
3. Cost base is July 1978.

Figure 13 Open-flume turbine costs

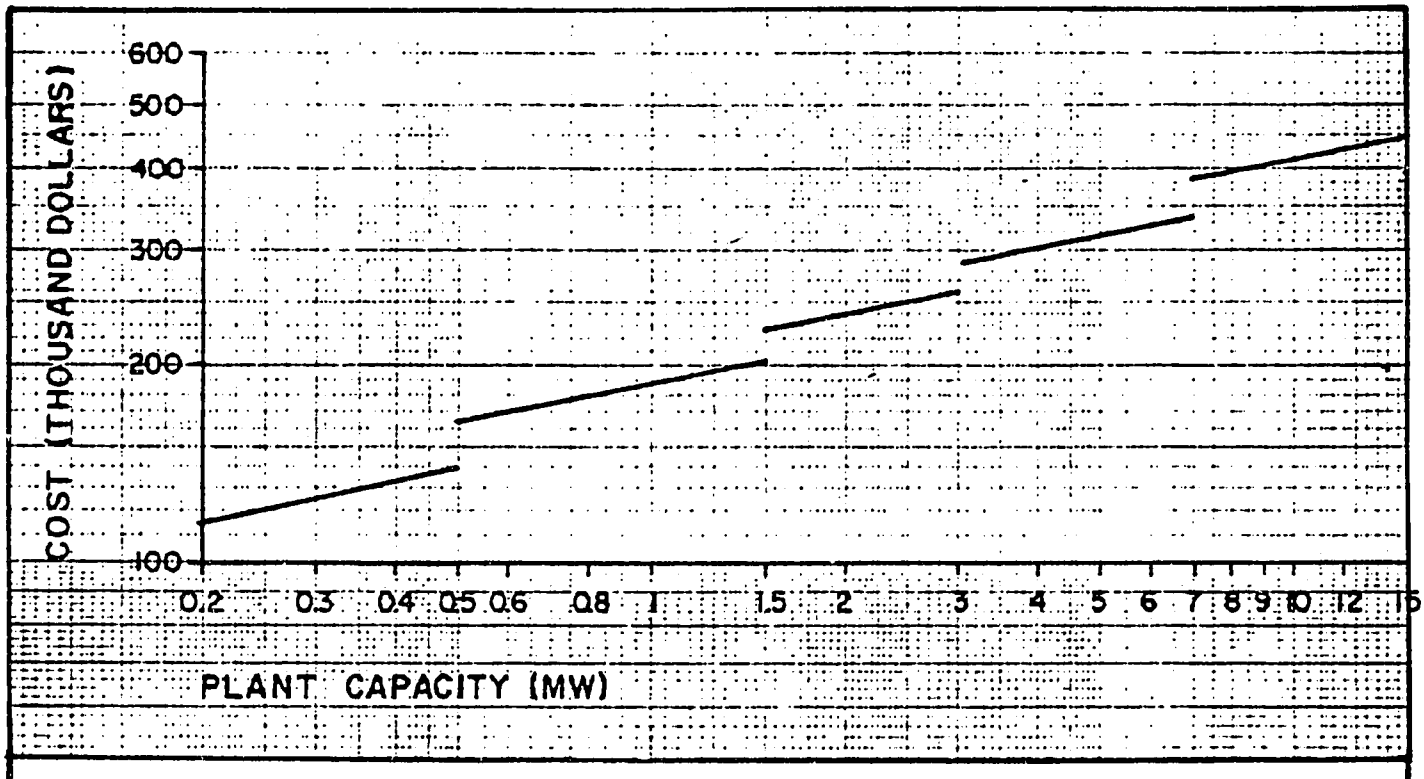

NOTES:

1. The equipment and systems for which costs are included are:
   a. D-C switchgear and batteries.
   b. Station service transformer and switchgear.
   c. Main control switchboard.
   d. Wire and cable system.
   e. Conduit system.
   f. Grounding system.
   g. Lighting system.
2. Costs include freight and installation.
3. Costs are shown for a single unit plant.
4. To determine costs for a plant with multiple units:
   a. Determine cost from curve for plant capacity.
   b. Subtract cost from Table A for plant capacity.
   c. Add cost from Table A for unit capacity times number of units.
5. Cost base is July 1978.

TABLE A	
MW	COST
0.2 - 0.5	25,000
0.5 - 1.5	35,000
1.5 - 3.0	45,000
3.0 - 7.0	60,000
7.0 - 15.0	95,000

Figure 14 Cost of electrical equipment

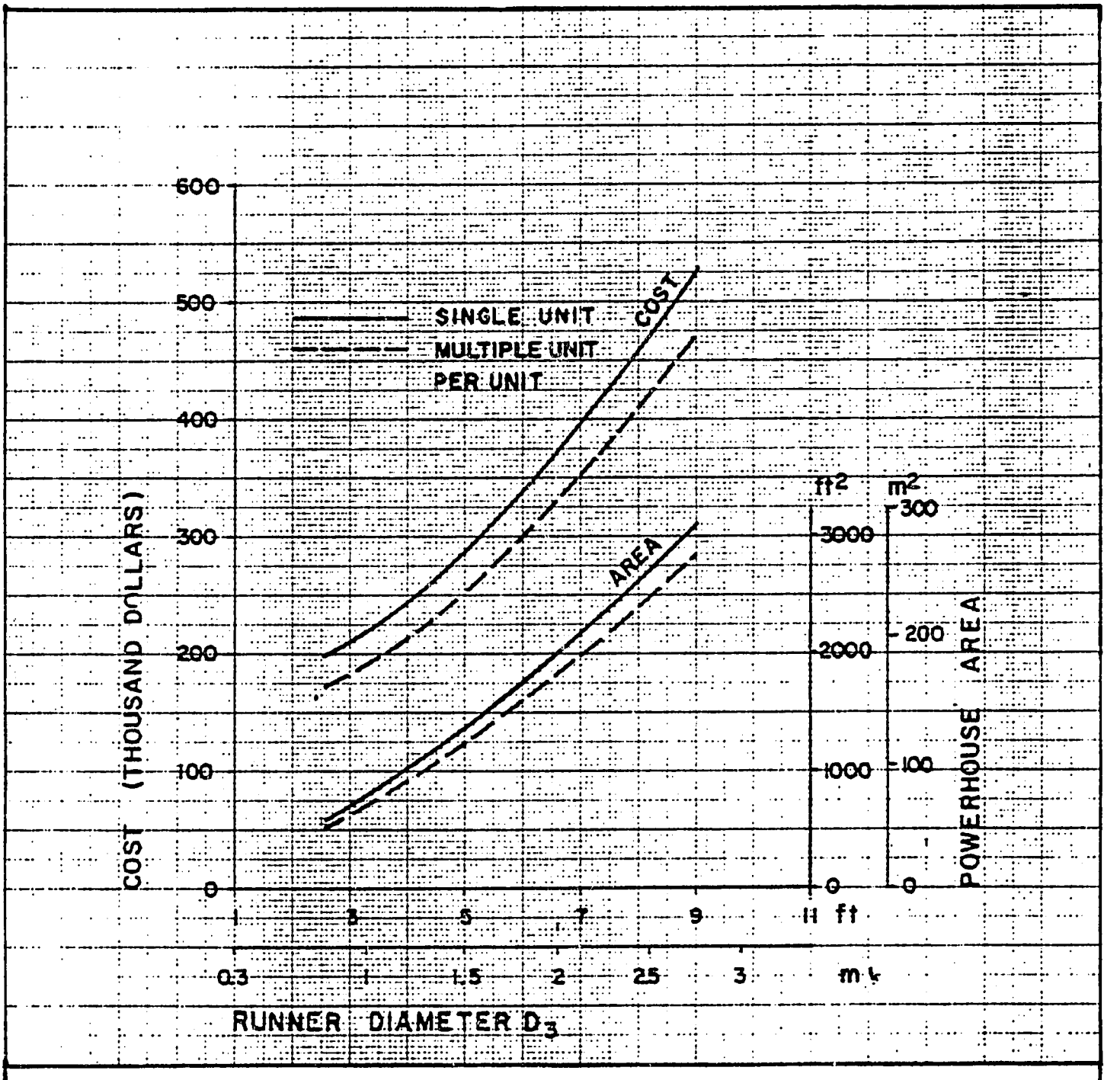

NOTES:

1. Costs are for a single unit powerhouse with a typical indoor arrangement (see figs. 4-22 and 4-31).
2. The cost estimate includes the reinforced concrete structure, concrete masonry superstructure, miscellaneous steelwork, architectural and other miscellaneous civil work required for construction of the power house.
3. The area shown is the plan area of the powerhouse structure.
4. Cost base is July 1978.

Figure 15 Open-flume turbine--powerhouse area and cost, without bypass

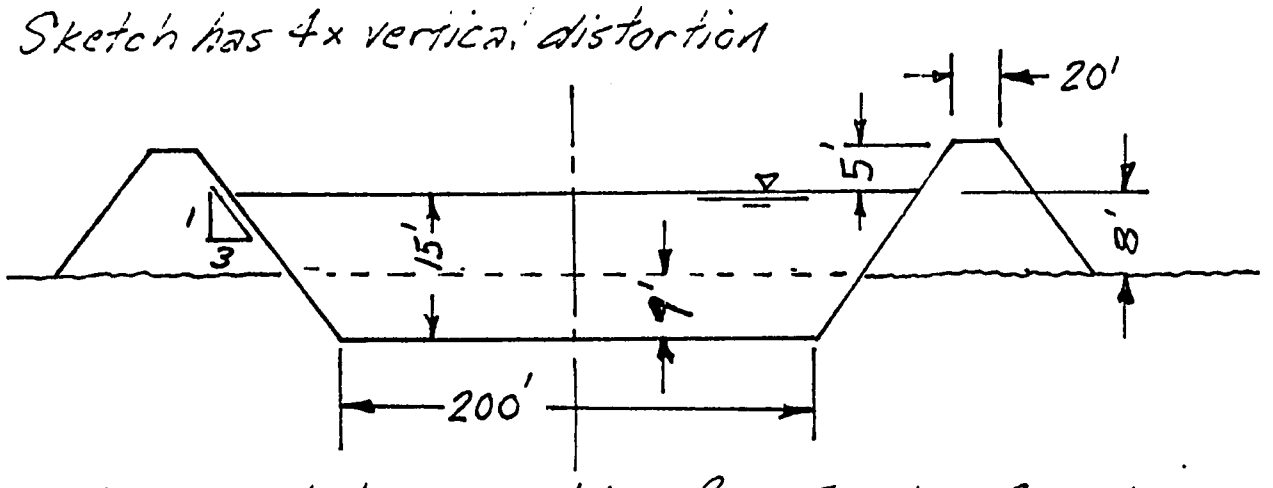

Representative section for Teesta Canal

Excavation = Fill = 1550 cubic feet / foot

Capacity = 7400 cfs

Velocity = 2.0 ft/sec

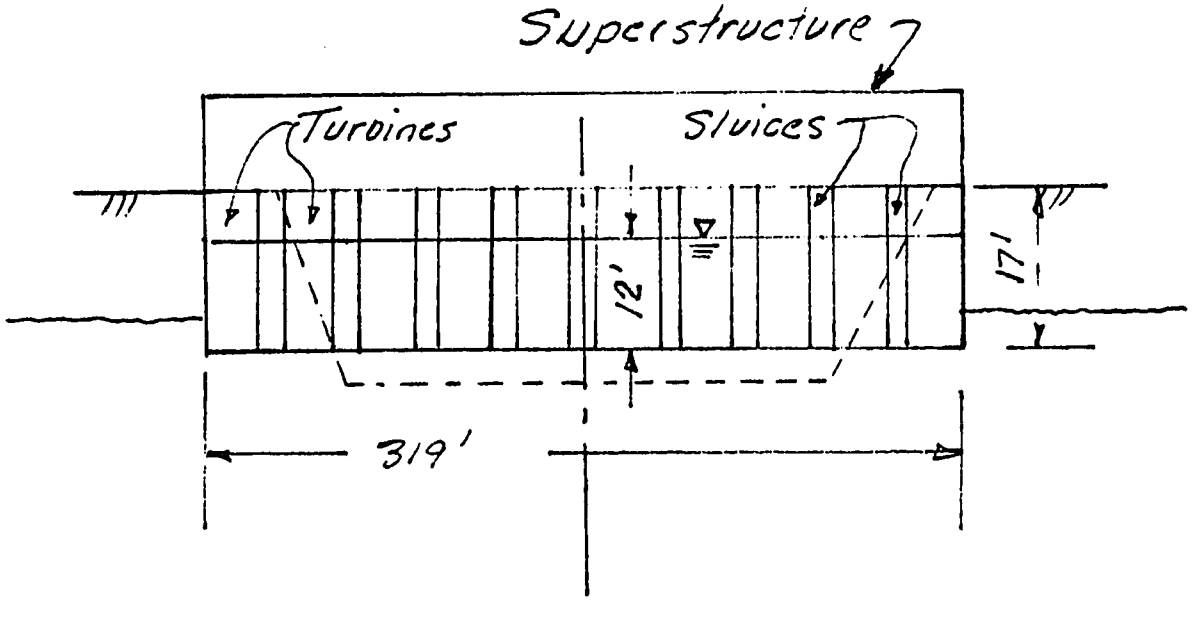

Section Looking Downstream on Scheme 1
Powerhouse and Sluice

Figure 16 Section views of canal and powerhouse