931-0130

June, 1980

Tech. Bul. No. 266

PN AAP 533

EVALUATION OF LEGUMINOUS INOCULANT QUALITY
A Manual

by
Karen L. Speidel and A. G. Wollum, II
Department of Soil Science
North Carolina State University

This state-of-the-art document was prepared as partial fulfillment of the objectives of grant number AID/csd 2835 from the Agency for International Development

130
S

North Carolina Agricultural Research Service

3601

Table of Contents

Page

Introduction 1

Inoculant Testing 2

Sample Collection 2
Preparation of Dilutions 3
1. Peat Base Inoculants 3
1.1 Materials 3
1.2 Procedures 3
2. Non-peat Base Inoculants 4
2.1 Agar Slants 4
2.2 Broth 4
2.3 Lyophilized 6
2.4 Oil 6
2.5 Preinoculated Seeds 7
Plant Infectivity Test 7
1. Seed Sterilization 8
2. Plant Growth 9
2.1 Plastic Pouch Method for Small Seeded Leguminous Plants 9
2.11 Materials 9
2.12 Procedures 9
2.2 Plastic Cup Method for Large Seeded Leguminous Plants 12
2.21 Materials 12
2.22 Procedures 12
2.3 Precautions 13
2.31 Block Pattern 13
2.32 Controls 13
2.33 Dilutions 14
Plate Enumeration Test 15
1. Materials 15
2. Procedures 15
3. Reading the Plates 16
4. Variations 17

Evaluation of Results 18

Plant Infectivity Test 18
Plate Counts 19
Standards 27
Quality of Rhizobia 29

Conclusions 30

Personnel 31
Facilities 32
Expectations 32

Literature Cited 35

Appendices | Page

A. Field Information Sheet 36
B. Example Data Sheet for Plant Infectivity Tests 37
C. Example Data Sheet for Plate Counts 38
D. Recipe for Yeast Extract-Mannitol Medium 39
E. Recipe for Gluconate Medium 41
F. Nutrient Solution 42
G. Total Nitrogen Determination Including NO_3 44
H. Statistical Methods of Analysis of Quality Parameters . . . 49
I. Preparation of Hockey Sticks (Bent Glass Rods) 51

INTRODUCTION

Increased demands for food and fiber by an increasing world population have strained the world's existing natural resources. This demand is expressed as a dependency on fast dwindling supplies of natural gas and has focused much attention to conservation practices. For example, only 2.5% of the United States annual consumption of natural gas is utilized for the commercial synthesis of nitrogen (N) fertilizer, but the scarcity and cost of this source of energy have stimulated an interest in alternatives to synthetic N fertilizers (Evans and Barber, 1977). Fortunately, there is a great potential to increase soil and plant N supplies without depleting our energy resources, through biological N fixation. This ability resides with some free-living microorganisms as well as some microorganisms in a symbiotic relationship. Perhaps the best known association is between the bacterium, Rhizobium and leguminous plants. Initial recognition of this important relationship is attributed to Hellreigel and Wilfarth (Alexander, 1977). However, the soil enriching quality of leguminous crops was known during the time of the Roman Empire when rotational cropping systems were introduced.

In order to maximize the use of this source of N there must be some means of assuring the participation of rhizobia with a known N fixing capability in the symbiotic process. This can be accomplished through rhizobial inoculation of leguminous seeds at the time of planting. While inoculation is not a universal practice, it is most often practiced: (1) when the leguminous host has not been previously grown in that field, (2) when there is doubt about the capability of the indigenous rhizobia to cause adequate nodulation, and (3) when the existing rhizobia are thought to be incapable of fixing adequate amounts of N (Allison, 1973).

Inoculation of leguminous plants has been practiced since about 1895 (Burton, 1967).

Agronomic utilization of inoculants requires a production technology where rhizobial strains can be processed into inoculants with a high viable rhizobial density. As we become more dependent on N fixation, it is imperative that inoculants of proven quality be available.

Numerous methods have been proposed for evaluating inoculant quality, but none has been accepted as standard. There is a need for a standardized procedure that can be applied to a variety of conditions to assure inoculants can be agriculturally beneficial. Governmental officials are becoming increasingly mindful of the problem of inoculant quality. In some instances, official agencies may be producing inoculants, hence a vital concern for quality. In other situations, official agencies may be asked to monitor or perhaps regulate newly established inoculant industries or inoculants imported for use. This manual was written in an attempt to produce a standardized procedure that would be applicable for a testing program for leguminous inoculants under a variety of conditions.

INOCULANT TESTING

Sample Collection: Good collecting techniques and handling of inoculants are the foundation of any successful testing program. Every attempt should be made to maintain status quo viability from the time the sample is collected until the sample can be evaluated in the laboratory.

1. Mark all samples with an identification number. Record this number, source, and date in a permanent field book. Each sample should be placed in a separate paper bag, also labeled with the

identification number.

2. Fill out a copy of the information sheet (Appendix A).
3. Transport all samples in a well ventilated car. Do not place samples in direct sunlight and do not transport them in the trunk of the car. If possible transport in an ice-cooled box.
4. Place all samples in $4^{o}C$ storage as soon after collection as possible.
5. Test all samples within seven to eight days of collection.

Preparation of Dilutions: Peat has become the most widely accepted form of carrier due to its protective action against the adverse effects of high temperature and low moisture content during storage and when used in soils. For these kinds of inoculants the preparation of dilutions is straightforward. However, there are a number of other forms of non-peat base inoculants which require specialized treatment to achieve a representative suspension for subsequent dilution.

1. Peat Base Inoculants

   1.1 Materials (per inoculant sample)

      1.11 Sample

      1.12 Ten sterile 200 milliliter (ml) screw-cap bottles

      1.13 Twelve sterile 10 ml pipettes

      1.14 Twelve sterile 1 ml pipettes

      1.15 Two liters (l) distilled or deionized water

      1.16 NaCl

   1.2 Procedures

      1.21 Add 17g NaCl to two l of water.

      1.22 Loosely cap the 10 dilution bottles.

1.23 Autoclave bottles and diluent at 15 lbs. pressure and 121°C for 20 minutes.

1.24 Dispense 90 ml of the NaCl diluent into each dilution bottle. Alternatively dispense 92 ml of solution into bottles before autoclaving.

1.25 Weigh out 10.0 g of the inoculant sample (Fig. 1).

1.26 Shake the bottle and its contents 100 times, or place on a mechanical shaker for 2 minutes.

1.27 Transfer 10 ml aliquots from one bottle to the next (Fig. 1). Between each transfer shake the bottle and contents thoroughly to assure a uniform suspension.

1.28 Continue dilution procedures until blank number 10 has been prepared. A 1 ml aliquot from this bottle represents a 10^{-10} dilution.

2. Non-peat Base Inoculants

2.1 Agar Slants

2.11 Add 10 ml of sterile broth to the agar slant.

2.12 Scrape the bacterial growth off the agar surface using a flamed transfer needle.

2.13 Gently agitate the tube.

2.14 Draw up 10 ml of the bacterial suspension in a sterile pipette and transfer to a sterile dilution blank containing 90 ml of sterile NaCl solution. Proceed as previously outlined.

2.2 Broth: Mix the bacterial suspension before transferring a 10 ml aliquot to a 90 ml sterile dilution blank. Proceed

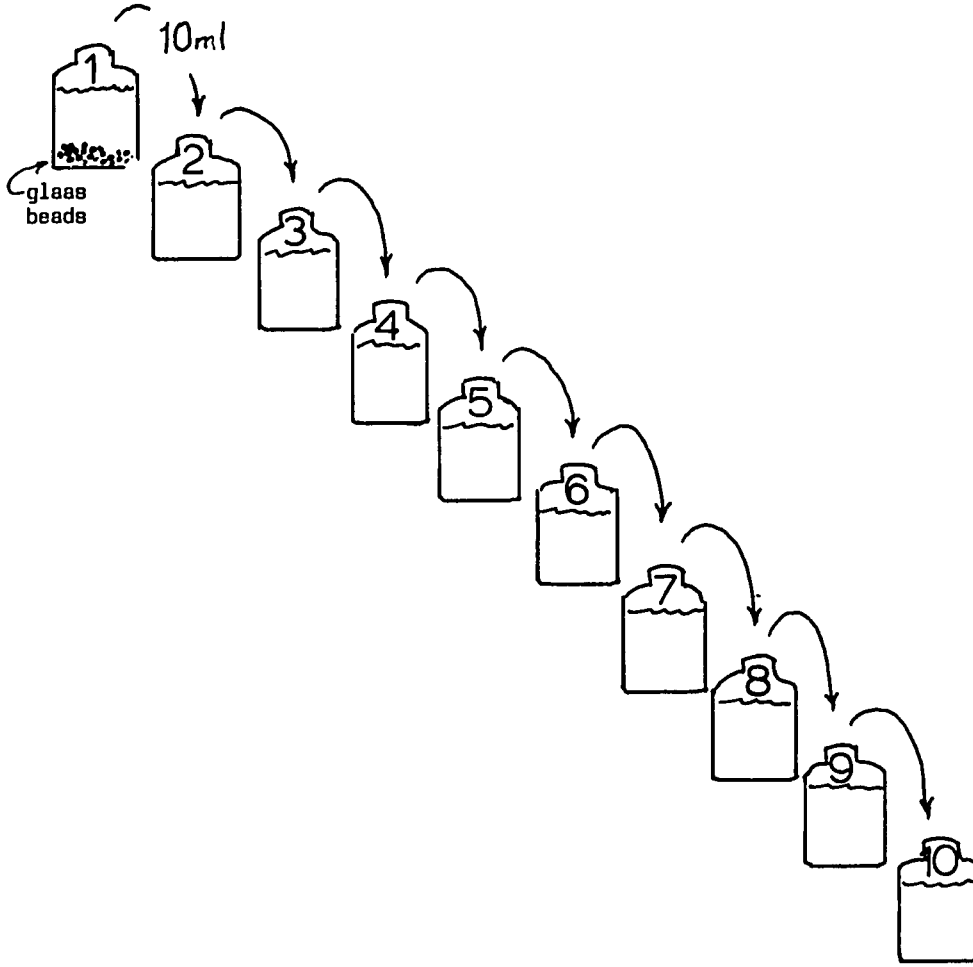

Figure 1. Dilution scheme for suspending inoculants.

as previously outlined.

2.3 Lyophilized

2.31 Add a few drops of yeast extract-mannitol broth and mix with a sterile glass rod or pipette to a pasty consistency.

2.32 Continue adding sterile broth using only a few ml at a time, mixing thoroughly before adding more broth.

2.33 Bring suspension to a final volume of 100 ml using sterile broth. Transfer a 10 ml aliquot of the bacterial suspension to a 90 ml sterile dilution blank. Proceed as previously outlined.

2.4 Oil (M. M. Joshi, personal communication)

2.41 Add 5 g of Span 85 to a 200 ml screw-capped bottle.

2.42 Add 5 g of Tween 85 and 80 ml of distilled water to an additional 200 ml screw-capped bottle.

2.43 Sterilize at 15 lbs. pressure and 121°C for 20 minutes and then cool to room temperature.

2.44 Weigh 10 g of the oil-base inoculant into the bottle containing the sterile Span 85.

2.45 Add the Tween 85 solution to the inoculant plus Span 85. If the total volume does not reach 100 ml, add additional sterile Tween 85 solution until the suspension volume is equal to 100 ml. In the absence of Tween 85/Span 85, other surfactants such as Tween 20, 40, 60, or 80 may be evaluated for their suitability in the testing program.

2.46 Mix the suspension thoroughly. This is a critical step since the oil is not normally miscible in water. Proceed as previously outlined.

2.5 Preinoculated Seeds

2.51 Add 100 seeds to one liter of sterile diluent.

2.52 Shake the suspension vigorously (Burton et al., 1972). Vincent (1970) notes that grinding the seeds may be a more effective way of recovering rhizobia, which may have gotten inside cracks in the seed coat. He also suggests an estimate based on a large sample of pooled seeds may mask possible inadequacies of individual seeds.

2.53 Dilute the suspension and proceed as previously described.

Plant Infectivity Test: The information obtained from a plant infectivity test is sufficient to determine the quality of an inoculant, yet it is not quite as precise as a plate count for enumeration. It also requires more time, labor, and materials than the plate count method. Despite obvious limitations, plant infectivity tests are essential to a high quality testing program and should be routinely conducted. In addition, by comparing biomass or plant N content increases over N-free, non-inoculated controls, one can infer something about the efficiency of the rhizobia in the inoculant.

Ideally, the plant growing environment should be controlled to provide optimal conditions for early nodulation. With proper control, results will yield more information since different runs could then be compared. At the same time, however, the costs for such controls must be justified by the expected information returns.

1. Seed Sterilization: Select seed of the highest quality and disinfect to remove seed borne organisms. Sometimes the seed is also scarified (scratched, or chemically etched with sulfuric acid). This is done to weaken a hard seed coat to allow germination to occur. Complete sterilization of the seed is probably not necessary for most inoculant testing programs. Therefore, choose a method that rids the seed of most organisms without significantly reducing seed germination. A number of acceptable methods are listed in order of preference. However, if one finds a particular method unacceptable for a given seed source, then an alternative procedure should be evaluated. Various procedures follow:

   1.1 Soak in 70% ethyl alcohol for 5 min., rinse three times with sterile water.

   1.2 Soak in 95% ethyl alcohol for 10 min., rinse three times with sterile water.

   1.3 Soak in 5% H_2O_2 for 10 min., rinse five times with sterile water.

   1.4 Soak in 10% H_2O_2 for 10 min., rinse five times with sterile water.

   1.5 Soak in 15% H_2O_2 for 10 min., rinse five times with sterile water.

   1.6 Shake in 70% ethyl alcohol for 2 min. Discard the alcohol and add a 3% solution of calcium hypochlorite (43 g/l). Shake for 15 to 20 min. Discard floating seeds. Rinse until free of chlorine smell with sterile water.

1.7 Soak in 3% calcium hypochlorite for 10 min. Rinse with sterile water until free of chlorine smell.

1.8 Soak in concentrated sulfuric acid up to 20 min. Wash 10 times in sterile water over a period of about 15 min. This is necessary to scarify seeds of many small hard-seeded leguminous plants.

Treat all seeds aseptically after sterilization. Keep in a sterile petri dish and handle with alcohol flamed forceps.

2. Plant Growth: Selection of seedling growth containers and nutrient solutions can be flexible to utilize available local resources. Two systems, one for small seeded leguminous plants and the other for large seeded leguminous plants, are presented.

2.1 Plastic Pouch Method for Small Seeded Leguminous Plants: (Weaver and Frederick, 1972)

2.11 Materials

2.111 Prepared dilutions of suspended inoculant

2.112 Disinfected seeds of appropriate host

2.113 Appropriate rhizobial culture for host

2.114 Nutrient solution (Appendix F)

2.115 Pipettes

2.116 Plastic pouches (Fig. 2)

2.12 Procedures

2.121 Add 40 ml of prepared nutrient solution to each pouch. Although Weaver and Frederick (1972) specify that pouches and nutrient solution need not be sterilized, some laboratories autoclave the assembly with nutrient solution at 15 lbs.

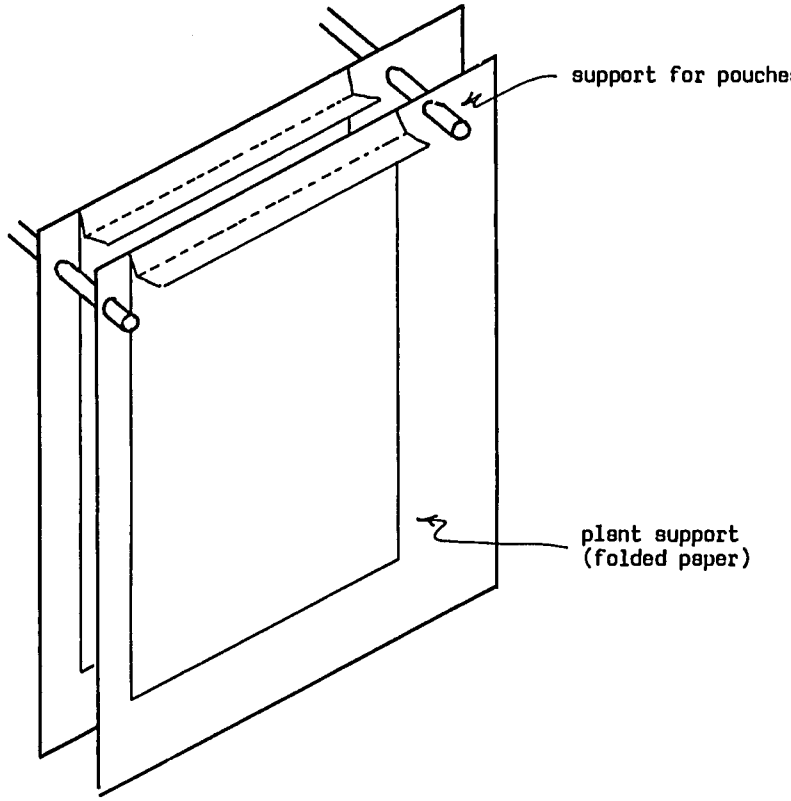

Figure 2. Plastic pouches used for infectivity tests involving small seeded leguminous plants.

pressure and 121°C for 5 to 20 minutes. The inclusion of a non-inoculated and nonautoclaved control in the first evaluation will indicate if autoclaving is necessary in subsequent tests. Some investigators divide each pouch into two or three compartments to conserve on the total number of pouches needed.

2.122 Distribute 15 disinfected seeds on the fold of paper in the pouch.

2.123 Inoculate the seed observing the following precautions: 1) Use the prepared dilutions of suspended inoculants. Shake the dilution bottle vigorously to assure a uniform suspension, 2) Inoculate pouches with 1 ml aliquots of the appropriate dilution, evenly distributed over the seeds in each pouch, 3) Duplicate each dilution with five individual pouches. Sufficient dilutions should be used so the last dilution is one beyond what is expected to be the extinction point (last dilution at which nodules will form), 4) Distribute controls between inoculated pouches (see 2.32 this section), 5) Check pouches daily and replenish moisture lost from pouches by transpiration or evaporation by alternating additions of distilled water and plant nutrient solution, 6) Score

pouches for presence (+) or absence (-) of nodules 21 days after inoculation. Record data on Form A (Appendix B).

2.2 Plastic Cup Method for Large Seeded Leguminous Plants

2.21 Materials (per inoculant sample)

2.211 Prepared dilutions of suspended inoculant

2.212 Disinfected seeds of appropriate host

2.213 Appropriate rhizobial culture for host

2.214 Nutrient solution (Appendix F)

2.215 Pipettes

2.216 One liter plastic or plasticized paper cups

2.22 Procedures

2.221 Punch three holes in the bottoms of the cups.

2.222 Distribute planting medium in cups to within 2 cm of the top. Vermiculite or perlite are convenient as they generally require no prior sterilization. Other media such as sand may contain viable rhizobia which could confound test results. Therefore the planting medium should be tested for presence of rhizobia before adoption into large scale testing programs. Materials with high counts of rhizobia should not be used or should be sterilized prior to use.

2.223 Add excess nutrient solution to cups and allow to drain.

2.224 Make four small holes in the planting medium about 1 cm deep using a sterile pipette.

2.225 Place one disinfected seed in each hole, and inoculate with 0.25 ml of the appropriate dilution applied to each seed following the instructions in Section 2.123. Use the pipette to cover the seed with planting medium, then discard. Do not use fingers to cover seeds as this may transfer inoculant from pot to pot.

2.226 Add excess nutrient solution to the pots every two days to replenish moisture losses. Once a week flush pots with water. Record data on Form A (Appendix B).

2.3 Precautions:

2.31 Block Pattern: It is not economically feasible to provide identical environments for each plant. Differences due to position in greenhouse, or even laboratory bench, will affect plant growth. To minimize differences not due to the treatment, the plants are usually arranged in groups (blocks) with one treatment replication per block. Within a block treatment representatives are randomized. Five blocks are recommended.

2.32 Controls: Several types of control treatments should be included in every run. A minimum of five pouches or cups of each type should be maintained for each

sample tested.

2.321 Noninoculated nitrogen-free plants: If non-inoculated plants nodulate, there has been contamination and the trial should be rerun.

2.322 Noninoculated nitrogen-containing control: Seventy ppm N (0.05% KNO_3) should be added to the nutrient solution of these plants only. These plants will be used for comparison to evaluate the efficiency of rhizobial strains on other plants.

2.323 A standard host x strain pair which does not vary from run to run: If this symbiotic relationship produces results significantly different from previous runs, control of environmental conditions should be suspected and the trial should be rerun.

2.33 Dilutions: Generally the decimal or 10-fold dilution is adequate to estimate rhizobial numbers in a sample. If additional precision is desired, use either a four- or two-fold dilution series instead of the 10-fold dilution series which is outlined. However, extend the dilution series to a point where no rhizobia are likely to occur, with five replicates per dilution. Two examples for sample inoculant test planning follow:

1) Number difficult to predict or unknown: Use 10-fold dilutions to 10^{-10} as previously described.

2) Number likely to be in the 10^3/g to 10^6/g range, fair

precision required: Use 10-fold dilution to 10^{-3} and then 2-fold steps to 2.1×10^{-6}.

Plate Enumeration Test: Inoculants prepared in non-sterile carriers present several problems for enumerating rhizobia by plating methods, including the recognition of rhizobial from non-rhizobial colonies. In addition when non-rhizobial organisms are more numerous than the rhizobia, they may overrun the plate and lower the rhizobial count. Due to these problems some investigators recommend testing inoculants only by plant infectivity procedures. However, the plate method may prove useful for rhizobial enumeration and evaluation of the status of contaminating organisms in the inoculant sample.

1. Materials (per inoculant sample)
   - 1.1 Prepared dilution blanks
   - 1.2 Bent glass rods (hockey sticks) (Appendix I)
   - 1.3 Sterile 1.0 ml (graduated in 1/10 ml) pipettes
   - 1.4 500 ml of Yeast Extract-Mannitol agar (Appendix D)
   - 1.5 Sterile petri plates
   - 1.6 Incubator
   - 1.7 Vortex or mechanical shaker (optional)
2. Procedures
   - 2.1 Place glass hockey sticks in large beakers and cover beaker tops with brown paper or aluminum foil. Autoclave at 15 lbs. pressure and 121°C for 20 min.
   - 2.2 Prepare medium to be used (Appendix D).
   - 2.3 Autoclave at 15 lbs. pressure and 121°C for 20 min. and cool to about 52°C.

2.4 Pour about 15 ml of medium into each petri plate. After the agar has solidified, invert the plates and stack in a 28°C incubator for 24 hours before using.

2.5 Transfer duplicate 0.1 ml aliquots from each of the dilutions of the suspended inoculant to separate plates. A 0.1 ml aliquot from bottle 7 (Fig. 1) represents a 10^{-8} dilution. Prepare plates for dilutions from 10^{-2} to 10^{-10}.

2.6 Spread the suspension on the agar surface using a fresh sterile glass hockey stick for each plate. Alternatively, use the same hockey stick for all plates by starting with the most dilute samples and flaming before each use by dipping in alcohol and passing the glass stick briefly through the flame of a bunsen burner.

2.7 Label all plates clearly with sample number, date of inoculation and dilution factor.

2.8 Invert the plates and place in a 28°C incubator. For faster growing rhizobial types (Rhizobium leguminosarum, Rhizobium phaseoli, Rhizobium trifolii, and Rhizobium meliloti), count the rhizobial colonies after 4 to 5 days, while for the slower growing types (Rhizobium japonicum, Rhizobium lupini and "cowpea" rhizobia), count the plates after 6 to 10 days.

3. Reading the Plates: Identification of rhizobia on agar plates requires considerable experience. Until competency in recognition of rhizobial colonies is well established, questionable colony types should be verified by a plant infectivity test.

3.1 Count the number of non-confluent colonies that fit the

following general cultural characteristics:

3.11 Fast growing rhizobial types

3.111 Circular

3.112 Convex, semitranslucent, raised and mucilaginous

3.113 Approximately 2 to 4 mm in diameter

3.12 Slow growing rhizobial types

3.121 Circular

3.122 Opaque, rarely translucent, convex and granular in texture

3.123 Generally 1 to 2 mm in diameter

3.124 Glistening, wet surficial appearance

3.2 Count the plates with approximately 30 to 300 rhizobial colonies.

3.3 Record data on Form C (Appendix C).

4. Variations: Despite precautions to assure a thoroughly mixed suspension, duplication between replicate samples may be difficult to achieve. Where duplicate plates differ by more than one dilution factor the plating procedure should be repeated. The addition of a wetting agent (Tween 85) at a concentration of 0.1% (1 g Tween 85 per 1 diluent) may facilitate the dispersion process.

Another frequently encountered problem involves the presence of a large number of contaminants in the sample. In instances where the apparent contaminants are equal to or greater in number than the rhizobia, the plating procedure should be

repeated using selective media. We have observed that actidione is relatively efficient in controlling contaminants on plates while other investigators prefer using brilliant green or congo red (Appendix D). Generally rhizobial counts will be somewhat less in the presence of the additives in comparison to the non-amended medium.

EVALUATION OF RESULTS

Enumeration of rhizobia, based on plant infectivity tests or plate counts should yield sufficient information to make inoculant quality judgments.

Plant Infectivity Test: Representative data for duplicate samples of inoculated soybeans are presented in Table 1. To convert these data to the likely number of rhizobia in the original sample, use Table 2. For other dilution schemes and numbers of replication use Tables 3, 4, and 5. This series of tables has been constructed from information provided by Fisher and Yates (1963).

To read the tables you must know:

1. number of replicates (n)
2. number of positive reactions (+)
3. number of dilutions (s)
4. dilution series factor

The following information based on Table 1 illustrates the use of Tables 2 through 5 to determine the most likely number of rhizobia in inoculant samples:

dilution factor (A) = 10

number of replicates (n) = 5

number of dilution(s) = 7

number of positive reactions = 15; 16

For this example use Table 2. Find column s = 7, and follow down the column to the row for 15 and 16 positive reactions. The number should be 1.73×10^2 and 2.7×10^2 for 15 and 16 positive reactions, respectively. To determine the number of rhizobia per gram of inoculant use the following formula:

$$x = \frac{(m)\ (d)}{(v)}$$

where x = number of rhizobia per gram of inoculant

m = number from table based on number of (+) pots

d = reciprocal of the least dilute material used (in this case, 10^{-4}; therefore $d = 10^4$)

v = volume of aliquot used to inoculate pot (in this instance 1 ml)

therefore $x = \frac{(1.73 \times 10^2)(10^4)}{1} = 1.73 \times 10^6$, and

$x = \frac{(2.7 \times 10^2)(10^4)}{1} = 2.7 \times 10^6$

The overall mean for the sample is equal to 2.2×10^6 rhizobia/g inoculant.

<u>Plate Counts</u>: Examples of sample data for evaluation of non-sterile carrier inoculants are given in Tables 6 and 7.

Examples for two non-sterile carrier inoculants are presented in Tables 6 and 7. For these data the values for replicates and duplicate plates are averaged to obtain an overall mean for the sample. Therefore the mean numbers of rhizobia/g inoculant were 7.93×10^8 and 19.9×10^5 for samples in Tables 6 and 7 respectively.

Table 1. Example of data obtained from plant infectivity test of a non-sterile carrier inoculant.

Form A

Date plants inoculated: 7/26/77

Date plants harvested: 8/23/77

No. replicates (n): 5

Host plant: Glycine max

Sample No.: 3C

Technician's Initials: PM

Dilution factor
A = ~~2~~, ~~4~~, 10

Dilution steps
s = ~~4~~, ~~5~~, ~~6~~, 7, ~~8~~, ~~9~~, ~~10~~

Sample/Duplicate	Dilution	Replicate 1	2	3	4	5	No. pots with nodulated plants
1 - 1	10^{-10}	-	-	-	-	-	0
1 - 1	10^{-9}	-	-	-	-	-	0
1 - 1	10^{-8}	-	-	-	-	-	0
1 - 1	10^{-7}	-	-	-	-	-	0
1 - 1	10^{-6}	+	+	+	+	+	5
1 - 1	10^{-5}	+	+	+	+	+	5
1 - 1	10^{-4}	+	+	+	+	+	5
1 - 2	10^{-10}	-	-	-	-	-	0
1 - 2	10^{-9}	-	-	-	-	-	0
1 - 2	10^{-8}	-	-	-	-	-	0
1 - 2	10^{-7}	+	-	-	+	-	2
1 - 2	10^{-6}	+	+	+	+	+	5
1 - 2	10^{-5}	+	+	-	+	+	4
1 - 2	10^{-4}	+	+	+	+	+	5
1	110[1/]	+	+	+	+	+	5
2	110	+	+	+	+	+	5
1	Control[2/]	-	-	-	-	-	0
2	Control	-	-	-	-	-	0

1/ Known rhizobial strain to verify if test is working.

2/ Non-inoculated control to assay contamination.

Table 2. (A = 10, n = 5) Number of rhizobia estimated by the plant infectivity test.

Positive Reactions	Number of Dilutions s = 10	s = 9	s = 8	s = 7	s = 6	s = 5	s = 4
	Number of Rhizobia						
0							
1	0.27	0.27	0.27	0.27	0.27	0.27	0.27
2	0.44	0.44	0.44	0.44	0.44	0.44	0.44
3	0.74	0.74	0.74	0.74	0.74	0.74	0.74
4	1.1	1.1	1.1	1.1	1.1	1.1	1.1
5	1.7	1.7	1.7	1.7	1.7	1.7	1.7
6	2.7	2.7	2.7	2.7	2.7	2.7	2.7
7	4.5	4.5	4.5	4.5	4.5	4.5	4.5
8	7.4	7.4	7.4	7.4	7.4	7.4	7.4
9	11	11	11	11	11	11	11
10	17	17	17	17	17	17	17
11	27	27	27	27	27	27	27
12	45	45	45	45	45	45	45
13	74	74	74	74	74	74	74
14	114	114	114	114	114	114	114
15	1.73×10^2	1.73×10^2	1.73×10^2	1.73×10^2	1.73×10^2	1.73×10^2	173
16	2.7	2.7	2.7	2.7	2.7	2.7	270
17	4.5	4.5	4.5	4.5	4.5	4.5	450
18	7.4	7.4	7.4	7.4	7.4	7.4	736
19	1.1×10^3	1.1×10^3	1.1×10^3	1.1×10^3	1.1×10^3	1.1×10^3	1.1×10^3
20	1.7×10^3	1.7×10^3	1.7×10^3	1.7×10^3	1.7×10^3	1.7×10^3	>1.1
21	2.7	2.7	2.7	2.7	2.7	2.7	
22	4.5	4.5	4.5	4.5	4.5	4.5	
23	7.4	7.4	7.4	7.4	7.4	7.4	
24	1.1×10^4	1.1×10^4	1.1×10^4	1.1×10^4	1.1×10^4	1.1×10^4	
25	1.7×10^4	1.7×10^4	1.7×10^4	1.7×10^4	1.7×10^4	>1.1	
26	2.7	2.7	2.7	2.7	2.7		
27	4.5	4.5	4.5	4.5	4.5		
28	7.4	7.4	7.4	7.4	7.4		
29	1.1×10^5	1.1×10^5	1.1×10^5	1.1×10^5	1.1×10^5		
30	1.7×10^5	1.7×10^5	1.7×10^5	1.7×10^5	>1.1		
31	2.7	2.7	2.7	2.7			
32	4.5	4.5	4.5	4.5			
33	7.4	7.4	7.4	7.4			
34	1.1×10^6	1.1×10^6	1.1×10^6	1.1×10^6			
35	1.7×10^6	1.7×10^6	1.7×10^6	>1.1			
36	2.7	2.7	2.7				
37	4.5	4.5	4.5				
38	7.4	7.4	7.4				
39	1.1×10^7	1.1×10^7	1.1×10^7				
40	1.7×10^7	1.7×10^7	>1.1				
41	2.7	2.7					
42	4.5	4.5					
43	7.4	7.4					
44	1.1×10^8	1.1×10^8					
45	1.7×10^8	>1.1					
46	2.7						
47	4.5						
48	7.4						
49	1.1×10^9						
50	>1.1						

Table 3. (A = 10, n = 2) Number of rhizobia estimated by the plant infectivity test.

Positive Reactions	Number of Dilutions s = 10	s = 9	s = 8	s = 7	s = 6	s = 7	s = 4
	Number of Rhizobia						
0							
1	.58	.58	.58	.58	.58	.58	.58
2	1.7	1.7	1.7	1.7	1.7	1.7	1.7
3	5.8	5.8	5.8	5.8	5.8	5.8	5.8
4	1.7×10^{1}	1.7×10^{1}	1.7×10^{1}	1.7×10^{1}	1.7×10^{1}	1.7×10^{1}	1.7×10^{1}
5	5.8	5.8	5.8	5.8	5.8	5.8	5.8
6	1.7×10^{2}	1.7×10^{2}	1.7×10^{2}	1.7×10^{2}	1.7×10^{2}	1.7×10^{2}	1.7×10^{2}
7	5.8	5.8	5.8	5.8	5.8	5.8	5.8
8	1.7×10^{3}	1.7×10^{3}	1.7×10^{3}	1.7×10^{3}	1.7×10^{3}	1.7×10^{3}	>5.8
9	5.8	5.8	5.8	5.8	5.8	5.8	
10	1.7×10^{4}	1.7×10^{4}	[illegible]10^{4}	1.7×10^{4}	1.7×10^{4}	>5.8	
11	5.8	5.8	5.8	5.8	5.8		
12	1.7×10^{5}	1.7×10^{5}	1.7×10^{5}	1.7×10^{5}	>5.8		
13	5.8	5.8	5.8	5.8			
14	1.7×10^{6}	1.7×10^{6}	1.7×10^{6}	>5.8			
15	5.8	5.8	5.8				
16	1.7×10^{7}	1.7×10^{7}	>5.8				
17	5.8	5.8					
18	1.7×10^{8}	>5.8					
19	5.8						
20	>5.8						

Table 4. (A = 2, n = 5) Number of rhizobia estimated by the plant infectivity test.

Positive Reactions	Number of Dilutions s = 10	s = 9	s = 8	s = 7	s = 6	s = 5	s = 4
	Number of Rhizobia						
0							
1							
2	0.21	0.21	0.22	0.22	0.22	0.22	0.23
3	0.33	0.33	0.34	0.34	0.34	0.35	0.36
4	0.46	0.46	0.47	0.47	0.47	0.48	0.58
5	0.60	0.60	0.61	0.61	0.62	0.63	0.66
6	0.76	0.76	0.76	0.77	0.77	0.79	0.84
7	0.92	0.93	0.93	0.94	0.95	0.97	1.0
8	1.1	1.1	1.1	1.1	1.1	1.2	1.3
9	1.3	1.3	1.3	1.3	1.4	1.4	1.5
10	1.5	1.5	1.5	1.6	1.6	1.7	1.8
11	1.8	1.8	1.8	1.8	1.8	1.8	1.8
12	2.1	2.1	2.1	2.1	2.1	2.1	2.1
13	2.4	2.4	2.4	2.4	2.4	2.4	2.4
14	2.8	2.8	2.8	2.8	2.8	2.8	2.8
15	3.2	3.2	3.2	3.3	3.4	3.2	3.2
16	3.7	3.7	3.7	3.7	3.7	3.7	3.7
17	4.2	4.2	4.2	4.2	4.2	4.2	4.2
18	4.8	4.8	4.8	4.8	4.8	4.8	4.8
19	5.5	5.5	5.5	5.5	5.5	5.5	5.5
20	6.4	6.5	6.6	6.4	6.4	6.4	>5.5
21	7.3	7.3	7.3	7.3	7.3	7.3	
22	8.4	8.4	8.4	8.4	8.4	8.3	
23	9.6	9.6	9.6	9.6	9.6	9.6	
24	11	11	11	11	11	11	
25	13	13	13	13	13	>11	
26	15	15	15	15	15		
27	17	17	17	17	17		
28	19	19	19	19	19		
29	22	22	22	22	22		
30	25	25	25	25	>22		
31	29	29	29	29			
32	35	35	34	34			
33	38	38	38	38			
34	44	44	44	44			
35	51	51	51	>44			
36	58	58	58				
37	67	67	67				
38	77	77	77				
39	88	88	88				
40	102	102	>88				
41	117	117					
42	134	134					
43	154	154					
44	177	177					
45	203	>177					
46	235						
47	268						
48	308						
49	345						
50	>345						

Table 5. (A = 2, n = 2) Number of rhizobia estimated by the plant infectivity test.

Positive Reactions	Number of Dilutions s = 10	s = 9	s = 8	s = 7	s = 6	s = 5	s = 4
	Number of Rhizobia						
0							
1	0.27	0.27	0.27	0.27	0.27	0.27	0.27
2	0.60	0.60	0.61	0.61	0.62	0.63	0.66
3	1.0	1.0	1.0	1.0	1.0	1.0	1.0
4	1.5	1.5	1.5	1.6	1.6	1.6	1.8
5	2.2	2.2	2.3	2.3	2.3	2.3	2.2
6	3.2	3.2	3.2	3.3	3.4	3.2	3.2
7	4.5	4.5	4.6	4.7	4.5	4.5	4.5
8	6.4	6.5	6.6	6.4	6.4	6.4	>4.5
9	9.1	9.2	9.0	9.0	9.0	9.0	
10	13	13	13	13	13	>9.0	
11	18	18	18	18	18		
12	25	25	25	2[illegible]	>18		
13	36	36	36	36			
14	51	51	51	>36			
15	72	72	72				
16	102	102	>72				
17	144	144					
18	203	>144					
19	288						
20	>288						

Table 6. Example of data obtained from plate counts for evaluation of a non-sterile carrier inoculant.

Form C

Date plates inoculated: 7/26/77 Technician's initials: PM

Date plates counted: 8/9/77

Plate No.	Sample No.	Replicate/ Duplicate	No. Rhizobia/ plate[1/]	Dilution	No. Rhizobia/g[2/]
6	2B	1/1	>300	10^{-6}	-
7	2B	1/2	>300	10^{-6}	-
8	2B	1/1	95	10^{-7}	9.5×10^{8}
9	2B	1/2	88	10^{-7}	8.8×10^{8}
10	2B	1/1	5	10^{-8}	-
11	2B	1/2	15	10^{-8}	-
18	2B	2/1	>300	10^{-6}	-
19	2B	2/2	>300	10^{-6}	-
20	2B	2/1	74	10^{-7}	7.4×10^{8}
21	2B	2/2	60	10^{-7}	6.0×10^{8}
22	2B	2/1	0	10^{-8}	-
23	2B	2/2	3	10^{-8}	-

1/ Do not count plates containing more than 300 colonies.

2/ When calculating mean, use counts which were between 30 and 300.

$$\bar{X} = \frac{(9.5 + 8.8 + 7.4 + 6.0) \times 10^{8}}{4} = 7.93 \times 10^{8}$$

Table 7. Example of data obtained from plate counts for evaluation of a non-sterile carrier inoculant.

Form C

Date plates inoculated: 7/26/77 Technician's initials: PM

Date plates counted: 8/9/77

Plate No.	Sample No.	Replicate/ Duplicate	No. Rhizobia/ plate	Dilution	No. Rhizobia/g[1/]
43	3B	1/1	310	10^{-4}	-
44	3B	1/2	350	10^{-4}	-
45	3B	1/1	28	10^{-5}	28×10^5 [2/]
46	3B	1/2	30	10^{-5}	30×10^5
47	3B	1/1	2	10^{-6}	-
48	3B	1/2	6	10^{-6}	-
49	3B	2/1	>300	10^{-3}	-
50	3B	2/2	>300	10^{-3}	-
51	3B	2/1	119	10^{-4}	11.9×10^5 [3/]
52	3B	2/2	99	10^{-4}	9.9×10^5
53	3B	2/1	7	10^{-5}	-
54	3B	2/2	11	10^{-5}	-

1/ When calculating mean, use counts which are between 30 and 300.

$$\bar{X} = \frac{(28 + 30 + 11.9 + 9.9) \times 10^5}{4} = 19.95 \times 10^5$$

2/ Duplicate samples corresponded to within 10%; hence 28 was included in the calculations even though it was below the 30 recommended for acceptance of plate counts.

3/ Duplicate samples differed by less than one log; hence both may be used for calculations without repeating dilutions and plate counts.

Standards: At this time no uniform standard has been established for inoculant quality, primarily due to variation in requirements of the leguminous host and the environmental conditions at planting. However, it can be safely said that the higher the number of viable rhizobia contained in the sample, provided the strain(s) are efficient, the better the inoculant. Vincent (1970) suggests that an inoculant which would provide approximately 300 to 3000 rhizobia/seed should be adequate for most species. Based on Table 8 this would indicate that the minimum number of rhizobia needed would be from 0.2 to 70 x 10^6/g of peat. While Burton et al. (1972) agree that 300 rhizobia per seed may be adequate for many leguminous plants, many investigators recommend a minimum number of 10,000 per seed for fast growing rhizobia and 100,000 per seed for the slow-growing rhizobia.

In addition, environmental stress conditions such as high temperatures, drought, excess soil acidity, high exchangeable Al, antagonistic soil organisms, and toxic seed coat factors may impair the nodulation process. Therefore, because of variations in host requirements and conditions at the time of inoculation, it may be that inoculant standards will have to be established for local conditions (Vincent, 1970).

Despite the lack of information concerning acceptable standards, the following compilation of standards is offered for guideline purposes. As experience is gained with local conditions, each testing agency will be able to establish more precise standards.

1. Freire (1977) has indicated that the Brazilian government requires at least 10^7 cells/g of inoculant at the time of sale.

Table 8. Relationship between seed size, quantity of seed treated and culture count calculated to provide 300/seed (from Vincent, J. M., 1970).

Host	S Weight of seed/g x 10^{-3}	W Weight of seed treated* g	R Approx. equivalent needed per g peat culture† x 10^6
Cajanus cajan	62	10,000	2
Centrosema pubescens	24	7,500	4
Desmodium uncinatum	3.3	5,000	20
Dolichos axillaris	7.2	5,000	8
Dolichos bifloris	24	7,500	4
Dolichos lablab	210	10,000	1
Glycine javanica	5.0	5,000	10
Glycine max	93	10,000	1
Leucaena glauca	42	10,000	3
Lotononis bainesii	0.3	1,000	40
Lotus corniculatus	1.2	2,500	25
Lotus uliginosus	0.5	2,500	70
Lupinus (blue)	140	10,000	0.8
Lupinus (yellow)	130	10,000	0.9
Medicago sativa	2.2	5,000	30
Phaseolus atropurpureus	10	5,000	6
Phaseolus aureus	42	10,000	3
Phaseolus lathyroides	7.9	5,000	8
Phaseolus vulgaris	252	10,000	1
Pisum sativum	300	10,000	0.4
Stizolobium sp.	1,000	10,000	0.2
Stylosanthes gracilis	3.0	5,000	20
Trifolium repens	0.6	2,500	50
Trifolium subterraneum	6.5	5,000	9
Vicia angustifolia	17	7,500	5
Vicia atropurpurea	45	10,000	3
Vicia dasycarpa	40	10,000	3
Vicia sativa	53	10,000	2
Vigna sinensis	68	10,000	2

*With 25 g peat in 100 ml suspension of culture (kept to certain practical limit

†Minimal standard to provide 300/seed.

2. Date (1969) recommended this scale for manufacturers:

	No. rhizobia/g inoculant	
below standard	$<10^7$	
doubtful	10^6 to 10^7	(may be given a 2-month expiration date)
satisfactory	10^8 to 10^9	(given a 6-month expiration date)
very satisfactory	$>10^9$	

Without exception all investigators recognize the importance of inoculant samples having at least 10-fold more rhizobia when produced than required at the time of useage to compensate for die-off.

Quality of Rhizobia: It has been pointed out that inoculant quality consists of more than just adequate numbers of rhizobia. Of equal importance is the strain's efficiency or ability to fix N in symbiosis with the appropriate host. Unproven strains may be compared against the standard strain run with each trial. The following information is most useful for evaluation of strain efficiency:

1. Chlorosis vs. greenness: Compare leaves from plants inoculated with test strain against leaves of plants inoculated with the standard strain. Leaves that are not greener and larger than the leaves from plants of the standard inoculum can be considered to have come from plants nodulated with inefficient rhizobia.
2. Plant matter accumulation:
   2.1 Separate plants into tops and roots.
   2.2 Put plant parts in labeled bags and place in forced-air oven set at 70°C for 24 hours. Alternatively arrange on

a large sheet of brown paper in the sun. Leave the plant parts exposed for at least two days. Be sure to protect from rain.

2.3 Weigh plant parts on balance.

2.4 Express results on g/top, g/root and g/plant.

2.5 Statistically compare weight of plants nodulated by different rhizobial strains to that of the inoculated control and the non-inoculated, nitrogen containing control.

3. Absolute nitrogen content: This technique can provide valuable information in support of other data such as dry matter accumulation.

3.1 After weighing (tops/roots/plant), grind plant parts to pass a 20 mesh sieve.

CONCLUSIONS

The inoculant testing program outlined above is ambitious; however, if biological N fixation is to realize its full potential in crop improvement, it is necessary. Realization of the benefits from this testing program will require extensive economic investments as well as the dedication of resources, personnel, and work space. Unless these commitments are understood and made, the program will not succeed. In order to make sound decisions concerning its implementation, certain project requirements need to be specified. As an aid in decision making, minimum requirements of the testing program are suggested, as well as alternatives in some categories.

Personnel: Foremost in personnel requirements for a successful inoculant testing program is the project manager. To operate most effectively the project manager should have post-baccalaureate training in some area of the biological sciences. Generally training in inoculant testing will be available on a workshop basis to those interested in establishing a program.

It is essential that the project manager be acquainted with all phases of the evaluation procedures and be able to supervise the daily operation of the laboratory. In addition, the project manager will be responsible for obtaining samples, either by direct collection or through cooperative agreements with various manufacturers or agricultural agents who have been trained in proper sample handling procedures. Finally the project manager is responsible for recommending acceptance or rejection of the samples based on their performance in the evaluation. In this respect the project manager may have to initiate studies for acceptable standards for inoculant viability and quality based on local conditions.

In a support position to the project manager is the technical assistant. Ideally the technical assistant should have a baccalaureate degree. This individual will be responsible for the daily operation of the testing laboratory and will conduct inoculant evaluation tests. This person will also be directly responsible for compilation and summarization of the data collected. It may be necessary for the technical assistant to work with the project manager to refine procedures to take into account local conditions with specific limitations. If funds for personnel are limited, it is recommended that the project manager also assume the responsibilities of the technical assistant.

One laboratory assistant may complete the analytical staff. The laboratory assistant may aid in routine media preparation, preparing of nutrient solutions, plant culture, laboratory cleanup and other routine procedures as directed by the project manager and technical assistant.

Facilities: A laboratory equipped for microbiological and plant assays is necessary. The laboratory should be approximately 50 m^2 with about 12 linear m of useable bench space. In addition the laboratory should have a storage area for media ingredients, chemicals, and supplies for culture work. A cleanup area should be available. Minimum equipment required includes: large refrigerator, microscope, oven, incubator, balance, and autoclave, in addition to standard laboratory supplies.

The size of the plant growth area will govern the size of the testing program, particularly if a significant portion is devoted to large-seeded leguminous plants. Because the small-seeded leguminous plants can be grown successfully by the pouch technique, space limitations are not as critical. Based on our experiences a 100 m^2 greenhouse devoted entirely to the testing program could provide adequate space for the evaluation of 50 to 70 inoculant samples each month.

Expectations: Inoculant evaluation is likely to occur during the cropping period and one should not expect to conduct the program at the same level of intensity all year. For this reason it may be desirable to couple the evaluation program to related activities. The facility and personnel would be suited for research and development in the areas of inoculant production technology, strain selection and evaluation, and study of host-strain interactions during nodulation.

The problem of limited resources raises the question of what con-

stitutes a valid test. The plant infectivity test alone could serve as the basis of evaluation without direct plate counts. The plant infectivity test also has the advantage that it can be performed without an autoclave. Ovens could be used to sterilize glassware. If distilled or deionized water is available, no additional precautions would be necessary other than using good microbiological techniques.

The plant infectivity test is limited in that it requires a minimum of 21 days before interpretations can be made, and a great deal of greenhouse space is required. This test allows for evaluation of the fewest number of samples within any given time span.

Plate counts are not recommended without confirming plant infectivity testing. This is particularly important during the early development stages of the testing program. Both procedures are complementary and thus provide an internal reference and check on technical skills.

Microbiological counts yield information about viability and are only as good as the experience of the person making the counts. Unless sophisticated tests are conducted no information about strain identity will be possible.

Inoculant evaluation should not be thought of as an end unto itself, but rather as a means to assist in production and utilization of high quality inoculants. This concept must always be foremost in the minds of the administrators of the program. The procedures outlined can contribute to the identification of poor manufacturing techniques, inferior strains, and weaknesses in the distribution and utilization schemes. By insuring inoculants are of a high quality, researchers can improve basic soil and crop management practices. Although occupying only a small portion in the overall management scheme, inoculants can contribute to

the realization of a betterment of the quality of life for man through improved food production capabilities.

LITERATURE CITED

Alexander, M. 1977. Introduction to soil microbiology, 2nd Ed. John Wiley & Sons. New York. 467 p.

Allison, F. E. 1973. Soil organic matter and its role in crop production. Elsevier Scientific Publishing Company. New York 637 p.

Burton, J. C. 1967. Rhizobium culture and use. p. 1-33. In H. J. Peppler (ed.).

Burton, J. C., C. J. Martinez, and R. L. Curley. 1972. Methods of testing and suggested standards for legume inoculants and preinoculated seeds. Nitragin Sales Corp. Milwaukee, Wisconsin.

Date, R. A. 1969. A decade of legume inoculant quality control in Australia. J. Aust. Inst. Agric. Sci. 35:27-37.

Evans, H. J., and L. E. Barber. 1977. Biological nitrogen fixation for food and fiber production. Science. 197:332-339.

Freire, J. R. J. 1977. Inoculation of soybeans. p. 335-379. In J. M. Vincent, A. S. Whitney, and J. Bose (eds.). Exploiting the Legume-Rhizobium Symbiosis. Proc. Workshop, Exploiting the Legume-Rhizobium Symbiosis. University of Hawaii.

Vincent, J. M. 1970. A manual for the practical study of the root-nodule bacteria. IBP Handbook No. 15. Blackwell Sci. Pub. p. 164.

Weaver, R. W., and L. R. Fredrick. 1972. A new technique for most-probable-number counts of rhizobia. Plant Soil. 36:219-222.

Appendix A: FIELD INFORMATION SHEET

1. SAMPLE NO:_____
2. LOT NO:_____
3. BRAND:_____ _____
4. MANUFACTURER:_____
5. OBTAINED FROM:_____
_____
_____
6. DATE SAMPLE OBTAINED:_____
7. SAMPLED BY:_____
8. CITY:_____
9. COUNTY:_____
10. STATE:_____
11. SAMPLE EXPIRATION DATE:_____

FOR FOLLOWING, CHECK APPROPRIATE RESPONSE

12. LOCATION IN STORE:
    - 12.1 Shelf_____
    - 12.2 Refrigerator_____
    - 12.3 Window Shelf_____
13. CONDITIONS OF STORAGE IN THE STORE:
    - 13.1 Refrigerator_____
    - 13.2 In sunlight_____
    - 13.3 Warehouse_____
14. CONDITION OF SAMPLE CONTAINER:
    - 14.1 Intact_____
    - 14.2 Broken_ _____
    - 14.3 Paper bag_____
    - 14.4 Plastic bag_____
15. TRANSPORTED:
    - 15.1 Mail_____
    - 15.2 Ice Chest_____
    - 15.3 Non-airconditioned car/truck_____
    - 15.4 Airconditioned car/truck_____

16. RECOMMENDED HOST:_____
17. STRAINS CONTAINED IN INOCULANT (if listed on pkg.):_____
18. NUMBER OF BACTERIA IN INOCULANT (from pkg.):_____
19. RECOMMENDED APPLICATION RATE (from pkg.):_____
20. DATE TESTS STARTED (Should not differ by more than 8 days from date in item 6):_____ _____
21. ADDITIONAL INFORMATION_____
_____
_____
_____

Appendix B: EXAMPLE DATA SHEET FOR PLANT INFECTIVITY TESTS

Form A

Date plants inoculated:_____ Technician's Initials:_____

Date plants harvested:_____ Dilution factor: A = 2, 4, 10

No. Replicates:_____ Dilution steps:

S = 4, 5, 6, 7, 8, 9, 10

Host plant:_____

Sample No.:_____ Starting dilution:_____

Sample/Duplicate	Dilution	Replicate					No. pots with nodulated plants
		1	2	3	4	5	

Appendix C: EXAMPLE DATA SHEET FOR PLATE COUNTS

Form C

Date plates inoculated:_____ Technician's initials:_____

Date plates counted:_____

Plate No.	Sample No.	Replicate/ Duplicate	No. Rhizobia/ plate	Dilution	No. Rhizobia/g

Appendix D: RECIPE FOR YEAST EXTRACT-MANNITOL MEDIUM

1. Materials

agar	15.0 g
mannitol	10.0 g
$MgSO_4 \cdot 7H_2O$	0.2 g
NaCl	0.1 g
$CaCO_3$	0.01 g
Yeast extract	0.5 g
K_2HPO_4	10.0 g

0.1 N NaOH

0.1 N NCl

2 l flask

250 ml flask

2. Preparation

2.1 Weigh components into a 2 l flask, separately weighing K_2HPO_4 into a 250 ml flask.

2.2 Add 1 l distilled/deionized water to components and 100 ml water to K_2HPO_4.

2.3 Adjust the pH of the medium, if necessary, to 6.8 with 0.1 N NaOH or 0.1 N HCl.

2.4 Autoclave at 15 lbs. pressure and 121°C for 20 min.

2.5 After the medium has cooled to 60°C add 1 ml of the autoclaved K_2HPO_4 solution to the medium. Swirl to mix.

3. Variations

3.1 For broth leave out the agar component and proceed as previously outlined.

3.2 Biostats can be incorporated into media to make them more selective for rhizobia. These media should be used cautiously as the biostats may differentially affect different strains of rhizobia. Several commonly used selective media include:

3.21 Actidione

3.211 Dissolve 3 g cyclohexamide in 250 ml ethyl alcohol.

3.212 Add a 1 ml aliquot to 1 l of the cooled medium.

3.22 Brilliant Green

3.221 Autoclave 100 ml of water at 15 lbs. pressure and 121°C for 20 min.

3.222 Dissolve 300 mg brilliant green in the cooled 100 ml of sterile water.

3.223 Add a 1 ml aliquot to 1 l of the cooled medium.

3.23 Congo Red

3.231 Proceed as outlined in 3.22 but dissolve 2.5 g of congo red in 100 ml of sterile water.

3.232 Add a 1 ml aliquot to 1 l of the cooled medium.

3.24 Rose Bengal

3.241 Proceed as outlined in 3.22 but dissolve 1.3 g rose bengal in 100 ml of sterile water.

3.242 Add a 1 ml aliquot to 1 l of the cooled medium.

3.243 Some investigators combine actidione with rose bengal for a modified rose bengal-actidione medium. To prepare this medium use stock solutions prepared for actidione and rose bengal. Add same proportions as if additives were being used separately.

Appendix E: RECIPE FOR GLUCONATE MEDIUM[1/]

1. Materials

Na_2HPO_4	0.125 g/l
Na_2SO_4	0.25 g/l
NH_4Cl	0.32 g/l
$MgSO_4 \cdot 7H_2O$	0.12 g/l
$FeCl_3$	0.004 g/l
$CaCl_2 \cdot 2H_2O$	0.013 g/l
HEPES[2/]	1.3 g/l
MES[2/]	1.1 g/l
gluconate (or mannitol)	5.0 g/l
L - arabinose	0.5 g/l
yeast extract	0.25 g/l

2 l flask
0.1 N NaOH
0.1 N HCl

2. Preparation

2.1 Weigh components into 2 l flask.

2.2 Add 1 l distilled/deionized water.

2.3 If necessary, adjust pH to 6.6 with 0.1 N NaOH or 0.1 N HCl

2.4 If a solid medium is desired add 15 g agar.

2.5 Autoclave at 15 lbs. pressure and 121°C for 20 min.

2.6 Cool before using.

3. Comments: Provides for very luxuriant growth of *Rhizobium japonicum*.

[1/] Cole, M. A., and G. H. Elkan. 1973. Transmissible resistance to penicillin g, neomycin, and chloramphenical in *Rhizobium japonicum*. Antimicrobial Agents Chemotherapy. 4:248-253.

[2/] HEPES and MES are organic buffers obtainable from Sigma Chemical Company, P. O. Box 14508, St. Louis, Missouri 63178.

Appendix F: NUTRIENT SOLUTION[1/]

Stock	Concentration	Stock Solution	Nutrient Solution
		(g/l stock)	(amount/liter)
1. $CaSO_4 \cdot 2H_2O$			1.12 g
2. Fe EDTA			1.0 ml
Na_2H_2 EDTA	0.0177 M	6.59	
$FeCl_3 \cdot 6H_2O$	0.0177 M	4.8	
3. K_2SO_4	0.5 M	87.13	2.0 ml
4. KH_2PO_4	1.0 M	136.09	0.25 ml
5. K_2HPO_4	1.0 M	174.18	0.625 ml
6. Micronutrients			1.0 ml
$MnSO_4 \cdot H_2O$	2.7 mM	0.453	
$CuSO_4 \cdot 5H_2O$	0.157 mM	0.0393	
H_3BO_3	1.70 mM	0.105	
$NaMoO_4 \cdot 2H_2O$	0.12 mM	0.0302	
NaCl	5.60 mM	0.329	
$CoCl_2 \cdot 6H_2O$	0.017 mM	0.004	
7. $MgSO_4 \cdot 7H_2O$	1.0 M	246.48	2.0 ml

Comments: The reagents and stock solutions must be added in the order given to at least 75% of the final volume of distilled water to avoid precipitation of Ca and Mg salts of HPO_4. Stir solution vigorously while adding stock solutions.

Due to the relatively low solubility of $CaSO_4 \cdot 2H_2O$ it is not feasible to make a concentrated stock solution. Dissolve appropriate amount in 75% of final volume of solution just before adding the other stock solutions.

Geigy sequestrene Fe138 can be used as the source of iron. EDDHA (ethylene diamine di-o-hydroxy phenyl acetate) is the chelator in this material. Solubilize Na_2H_2 EDTA before adding $FeCl_3$ to stock solution.

Unless highly purified salts are used, do not include $CoCl_2 \cdot 6H_2O$.

1/ Modified Ahmed and Evans Nutrient Solution (Israel, D., personal communication, Department of Soil Science, North Carolina State University).

Appendix G: TOTAL NITROGEN DETERMINATION INCLUDING NO_3

1. Reagents

   1.1 H_2SO_4; concentrated, 36N

   1.2 K_2SO_4; reagent grade, fine crystals

   1.3 Catalysts:

      1.31 Zr: Dissolve 67.75 g $ZrSO_4 \cdot H_2SO_4 \cdot 3H_2O$ (M.W. = 355.41, Zr = 91.22) in 0.1 N H_2SO_4 and dilute to 250 ml with 0.1 N H_2SO_4 (0.2 ml contains 13.8 mg Zr).

      1.32 Cu: Dissolve 34 g $CuSO_4 \cdot 5H_2O$ (M.W. = 249.68, Cu = 63.55), in water and dilute to 100 ml (0.2 ml contains 17.3 mg Cu).

   1.4 NaOH-$Na_2S_2O_3$ soln.; 15 N NaOH, 600 g NaOH + 40 g $Na_2S_2O_3 \cdot 5H_2O$ up to 1.0 liter.

   1.5 Boric acid; 20 g boric acid to 1.0 liter.

   1.6 Methyl red soln.; 140 mg. Na methyl red in 100 ml H_2O.

   1.7 Indicator soln.; 100 ml boric acid solution + 1 ml methyl red + 1 ml methylene blue. Solutions must be prepared fresh daily.

   1.8 Methylene blue soln.; 70 mg methylene blue in 100 ml H_2O.

   1.9 $KH(IO_3)_2$ soln.; 0.01 N (3.8993 g/l).

2. Digestion

   2.1 Weigh out from 20 to 100 mg (up to 1.5 mg N) dry tissue into 100 ml Kjeldahl flasks, making sure the tissue does not stick to sides.

   2.2 Add 0.1 g salicylic acid and 3.5 ml concentrated H_2SO_4. Mix to wet entire sample. Allow to stand for 1 hour. For con-

venience salicylic acid can be dissolved in the acid before being added to flasks (28.6 g salicylic acid up to 1000 ml H_2SO_4).

2.3 Add 0.18 g anhydrous NaS_2O_3 and let stand for 5 min.

2.4 Heat until frothing subsides. Swirl several times during heating. This generally takes about 20 min.

2.5 Cool and add 2.5 g K_2SO_4 and 0.2 ml of $ZrSO_4$ and 0.2 ml $CuSO_4$ solutions. Avoid sloshing the contents up on the sides of the flasks. Heat at 200°C for 45 min. to vaporize water.

2.6 Turn the digester to 380°C and place the flask on the rack. With 100-ml flasks and samples no larger than 250 mg, frothing does not appear to be a problem. Small glass funnels may be placed in the neck of flasks to lessen the loss of acid by vaporization.

2.7 Digest (acid should reflux 1/3 to 1/2 the way up the neck of the flask) until the solution clears (about 30 min.) and then 1 hour more. Some of the sample may stick to the sides of the flask. This must be worked down into the acid by rotating the flasks on the rack or by swirling the flask. Swirling can be done fairly easily by gripping the neck of the flask with large pliers.

2.8 Remove the flasks from the rack and let them cool 3-5 minutes in the hood. If they are cooled longer, considerable salt forms when water is rapidly added to the flasks, and this salt is difficult to redissolve. If they are cooled less than 3 minutes, the digest spatters when the diluting water is added.

Some salt will usually precipitate but it usually redissolves readily.

3. Distillation

3.1 Turn on the steam generator, the condenser, and preheat the distillation head. Flow rate of condenser water should be sufficient so that NH_3 condenses about 1/2 of the way down the condenser. Turn water on carefully. Use distilled water in the steam generator and add 2-3 drops of conc. H_2SO_4 for each 5 liters of water. Rinse the flask when the water becomes strongly discolored or salts accumulate. Also add pumice or carbon boiling chips to promote smooth boiling. A nearly full flask requires about 1 hour to come to a boil. Preheating of the distillation head is necessary to remove any residues of NH_3 and to facilitate the addition of the alkali. Alkali addition for the first sample is difficult if the steam inlet stem has not been preheated.

3.2 Put alkali (NaOH) solution in the funnel. Always rinse the alkali funnel and stopcock (and release the plug) whenever the unit is not going to be used for several hours or more. Do not allow alkali salt to build up and mar the teflon plug.

3.3 Place 25 ml boric acid-indicator solution in 125 ml Erlenmeyer flasks.

3.4 Fit the Kjeldahl flask to the distillation head and rapidly drain in 12$\pm$ 1.0 ml of the NaOH-$Na_2S_2O_3$ solution. Moisten the T of the distillation head before connecting the flasks. Keep the teflon tape in good repair. Teflon tape is much more convenient to use than stopcock grease. The digest should turn black (HgS) when the alkali is added.

3.5 Rapidly introduce steam. Turn the steam stopcock rapidly so that pressure does not build up in the generator. Be certain that the steam stopcock is never in a position to cause pressure to build up in the generator. Use a rate rapid enough to distill 7-8 ml of water per minute. If steam is added too rapidly, alkali spray may be forced over into the boric acid. Distillation times are needlessly long if the steam rate is too small.

3.6 Place the receiving tip in the flask of boric acid. The receiving flask need not be put in place until after the alkali has been added and the steam introduced. NH_3 will not begin distilling over for about 1 minute. If the receiving tip is submerged, suck-back of boric acid can occur. Submergence of the tip is not necessary.

3.7 Distill over about 25 ml of water. This requires about 5 minutes from the time the flask is placed on the distillation head, which is an adequate distillation time for 2 to 3 mg N. To check for completeness of NH_3 distillation, remove the first flask of boric acid after 5 minutes and place a second flask in position to see if any more NH_3 comes over. Excessive distillation causes excessively dilute boric acid solution.

3.8 Lower receiving flask of boric acid and let condensate rinse the receiving tip for 10 to 15 seconds.

3.9 Remove rapidly the Kjeldahl flask before diverting steam. The flask must be removed before steam is diverted to prevent suck-back. Remove the flask quickly so that steam does not spatter hot alkaline solution out of the flask.

3.10 Divert steam, refill alkali reservoir, place new flask on the head and repeat starting at 3.7 above.

4. Titration

4.1 Titrate the sample with the $KH(IO_3)_2$ solution using a 10-ml buret to a lilac colored end point which is 1 or 2 drops after the gray color.

4.2 Titrate the blank using a 2 ml buret.

4.3 One ml 0.01 N $KH(IO_3)_2$ = 0.1401 mg N.

Appendix H: STATISTICAL METHODS OF ANALYSIS OF QUALITY PARAMETERS

1. Compare plants from the sample and standard strain groups at the same dilution level of inoculation. Choose plants at the dilution level before the extinction point of the same strain or two before if preferred.

2. Formulate a null hypothesis stating that there are no differences between the standard strain and the sample strain, at a given level of confidence:

$$H_0: \ \bar{x} \text{ Standard} = \bar{x} \text{ Sample}$$

The alternative hypothesis is that they are not equal:

$$H_1: \ \bar{x} \text{ Standard} \neq \bar{x} \text{ Sample}$$

3. Evaluate the data points, x_i, to determine the mean (average), $\bar{x}$, for each treatment:

$$\bar{x} = \sum_{i=1}^{n} x_i$$

$\bar{x}$ - mean
n - number of data point
Σ - summation
x_i - individual datum

i.e., add all the data and divide by the number of data.

4. Determine the variance within the sample/standard groups, s^2 pooled:

First determine the sum of squares, ss, for each treatment.

$$ss_1 = \Sigma x_1^2 - \frac{(\Sigma x_1)^2}{n_1}$$

1 - standard
2 - sample

$$ss_2 = \Sigma x_2^2 - \frac{(\Sigma x_2)^2}{n_2}$$

Now calculate the pooled variance:

$$s^2 \text{ pooled} = \frac{ss_1 + ss_2}{(n_1 - 1) + (n_2 - 1)}$$

5. Finally calculate the test statistic, t:

$$t = \frac{x_1 - x_2}{\sqrt{\frac{s^2 \text{ pooled } (n_1 + n_2)}{n_1 \cdot n_2}}}$$

Refer to a two-tailed t-test table (Fisher, R. A., 1963). Compare the calculated t to t'. If t < t' the null hypothesis ($\bar{x}$ standard = $\bar{x}$ sample) is accepted. If t > t' reject the null hypothesis and accept the alternative hypothesis ($\bar{x}$ standard $\neq$ $\bar{x}$ sample); i.e., the treatments have significantly different means.

Fisher, R. A. Statistical Methods for Research Workers. Oliver and Boyd, Edinburgh.

Appendix I: PREPARATION OF HOCKEY STICKS (BENT GLASS RODS)
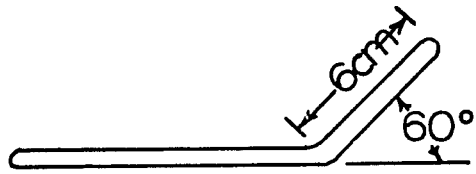
1. Cut glass rod into 20 cm sections.
2. Fire polish ends of rod.
3. Bend the rod at about 6 cm from one end to an angle of about 60°.