Sample Copy PN-AAP-287
ISN 33418

THE SALAWE PUMP

A CONSTRUCTION MANUAL

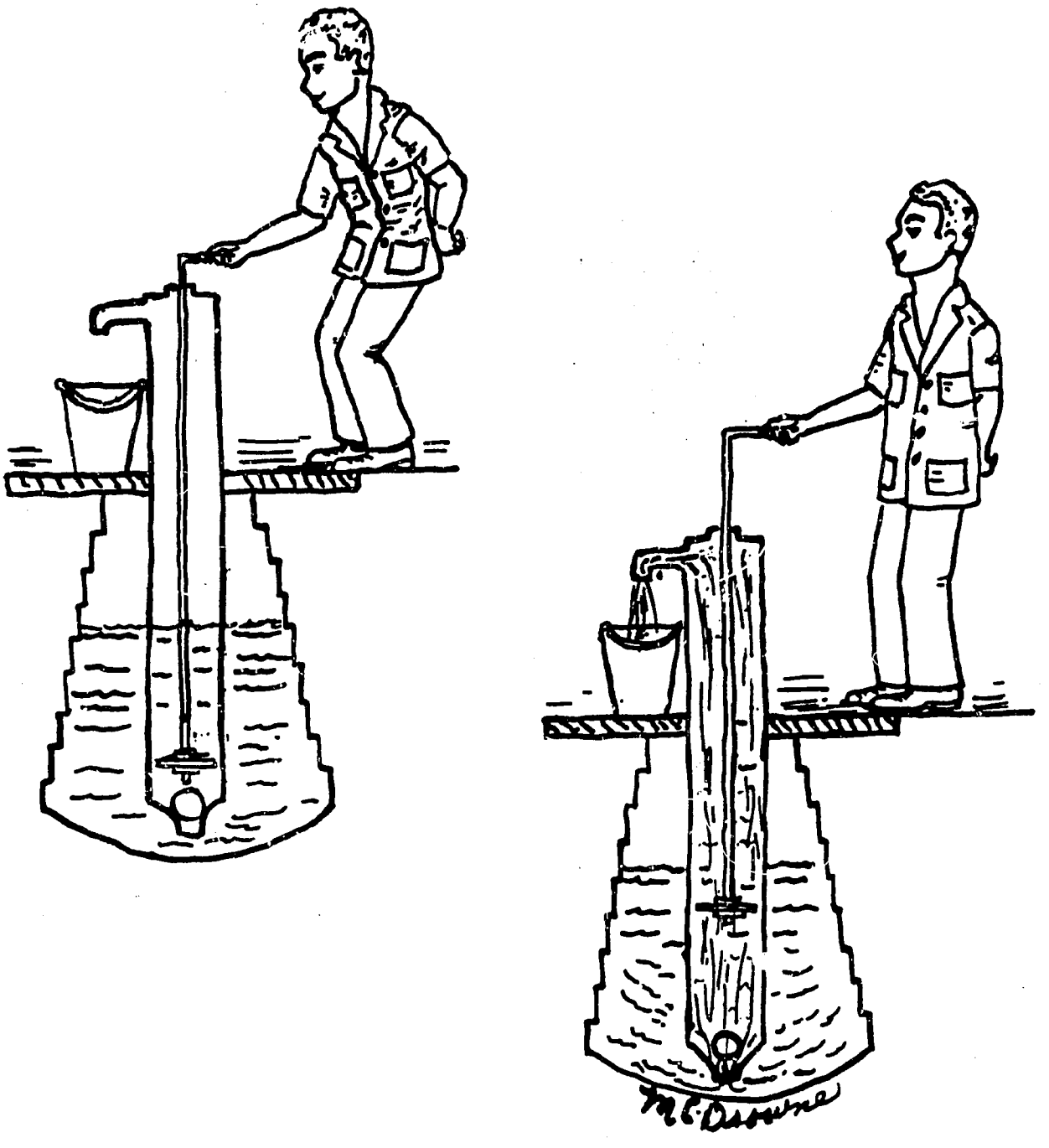

a VITA publication

PNAAP 287

THE SALAWE PUMP
A CONSTRUCTION MANUAL

Published by

VOLUNTEERS IN TECHNICAL ASSISTANCE
3706 Rhode Island Avenue
Mt. Rainier, Maryland 20822 USA

This manual was made possible by information obtained from TOOL, Postbox 525, Eindhoven, The Netherlands. Len Doak and Jerry Lindquist helped to modify the pump's design and simplify the text. VITA technical writer Gregory James assembled the information and VITA Volunteer George Clark drew the wonderful drawings.

TABLE OF CONTENTS

I. What It Is and What It Is Used For 1

II. Preconstruction Considerations 5

III. Construction 9

IV. Other Designs 21

V. Operating The Pump 25

THE SALAWE PUMP

A CONSTRUCTION MANUAL

I. WHAT IT IS AND WHAT IT IS USED FOR

This simple pump can be used to raise water from wells up to 6 meters (20 feet) deep. It is easy and cheap to build. The pump was designed by Reverend George Cotter, for the people of Salawe Village in Tanzania. Improvements were made by VITA and are included in this manual.

This manual first describes the pump, then tells how to build the pump and how to cover and enclose the well. The manual then talks about some changes that can be made to the pump.

Read this manual all the way through before you start building the pump. Make sure you have all the tools before you start the job. Even though the design in Figure 1 is the easiest one to build, other designs are also easy to build and may allow you to use parts that are easier to get or work better on wells deeper than about 3.7 meters (12 feet) deep.

The design shown in Figure 1 works best with wells that are not deeper than 3.7 meters (12 feet). It will also work on wells up to about 6 meters (20 feet) deep, but it is more work to pump water from these deeper wells. For wells deeper than 3.7 meters (12 feet) the plunger assembly shown in the section "Other Designs" will work better.

WARNING: Water from shallow wells or from a lake or river may not be safe for drinking or cooking. Such water may only be safe for use in watering gardens.

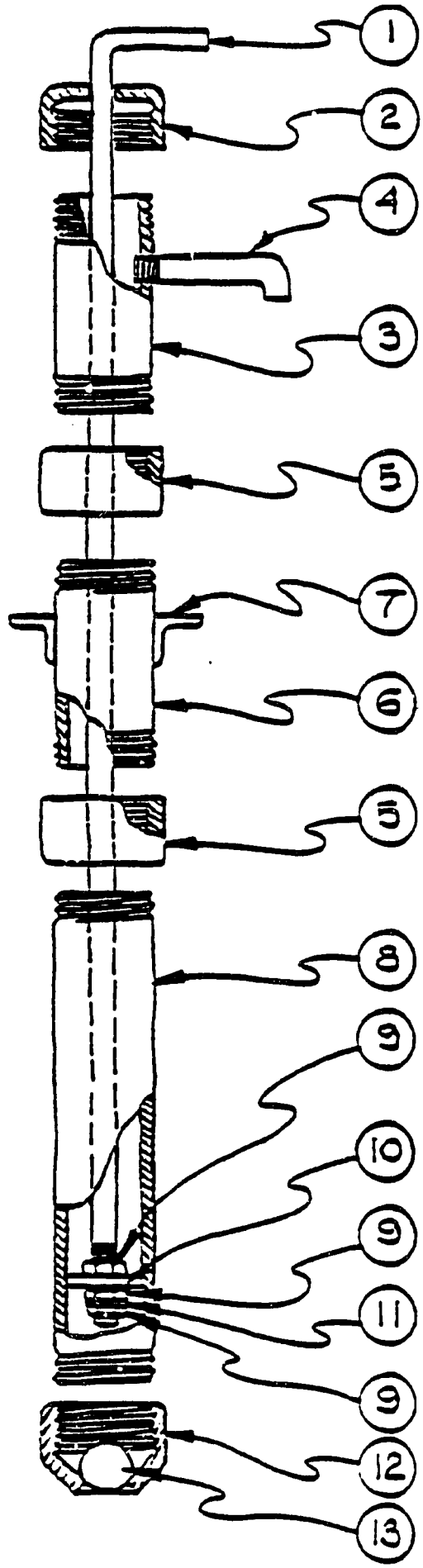

Figure 1. Pump Design

TABLE 1. Pump Parts List

Part No.	Name	Material	Diameter/Length/Width	Amount Needed
1	Pump Rod	Steel	1/2"* (1.7cm)	1
2	Pipe Cap	Steel	2" (5cm)	1
3	Top Pipe	Steel	2" X 20" (5cm X 51cm)	1
4	Spout	Steel	3/4" X 10" (1.9cm X 25cm)	1
5	Coupler	Steel	2" (5cm)	2
6	Mid Pipe	Steel	2" X 20" (5cm X 51cm)	1
7	Flanges	Angle Steel	2" X 10" (5cm X 25cm)	2
8	Well Pipe	Steel	2"* (5cm)	1
9	Nut	Steel	1/2" (1.7cm)	3
10	Plunger Plate	Steel	1/4" X 1-7/8" (0.6cm X 4.7cm)	1
11	Split Washer	Steel	1/2" (1.36cm)	1
12	Reducer	Steel	2" to 1" (5cm to 2.5cm)	1
13	Ball	Steel	1-1/8" (3.2cm)	1

II. PRECONSTRUCTION CONSIDERATIONS

USE To pump water from shallow wells, or from the edge of a lake or river. Water from these sources may only be safe for use by animals, or for gardens.

PUMP CAPACITY Maximum lift of water is about 6 meters (20 feet). You can pump about 20 liters (5 gallons) per minute, using this 5cm (2 inch) diameter well pump.

COST* Parts to build the pump should cost about $45 (US, 1979).

BUILDING TIME The pump and the bricks to line a shallow well can be built in a few days by a few people.

ADVANTAGES The well is covered so people and animals cannot fall in. The water will have less debris, such as leaves and earth, in it. You can build it in just a few days, and it is cheap to build.

PARTS FOR THE PUMP

For the design shown in Figure 1, you will need the parts listed on the Pump Parts List (see page 3). If you cannot get

---

*Cost estimates serve only as a guide and will vary from country to country.

Previous Page Blank

the 5cm (2 inch) diameter pipe,* shown on the Pump Parts List you can use a larger or smaller pipe. But then you must also change the sizes (diameters) of other parts so they will all fit together.

The Pump Parts List gives the lengths for all pieces except part 1 (pump rod) and part 8 (the well pipe). The lengths for these two parts depend on the depth of the well and cannot be the same for every well. A way to determine these lengths is given below.

MEASURING THE DEPTH OF THE WELL

Measure the depth of the well as shown in Figure 2. You need the well depth to determine the lengths of the pump rod (part 1) and the well pipe (part 8).

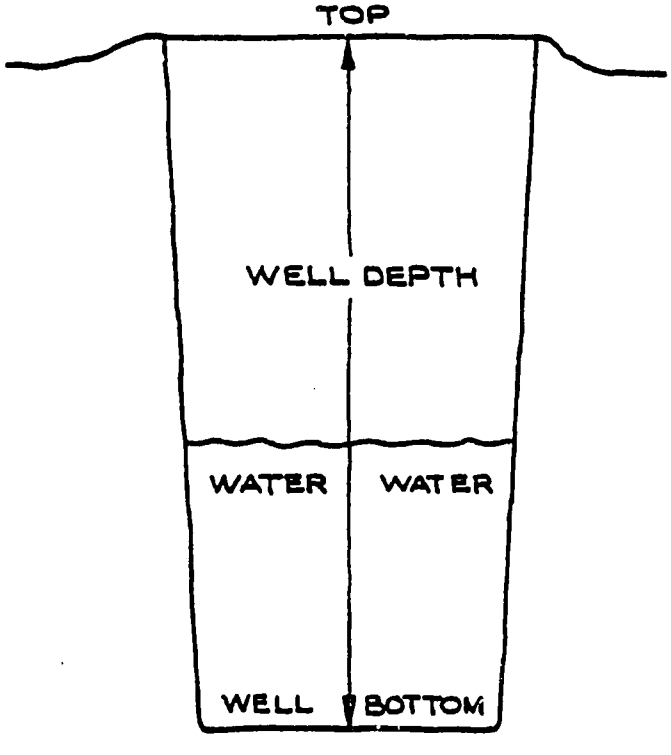

Figure 2. Measure the Well

*Pipe diameters are given as the inside diameter of the pipe.

FINDING THE LENGTH OF THE PUMP ROD AND WELL PIPE

The length of the pump rod, including the 25cm (10 inches) for the handle, should be the well depth plus about 0.9 meters (3 feet). For example, if the well depth is 2.75m (9 feet), the pump rod should be 3.65m (12 feet) long. Make the rod a little too long, rather than short.

The length of the well pipe (part 8) should be the well depth minus 40.6cm (16 inches). For example, if your well depth measured 2.75m (9 feet) deep, the well pipe should be 2.3m (7 feet 8 inches) long.

III. CONSTRUCTION

THE PUMP

The following parts must be built and assembled.

Pump Rod (Part 1)

The pump rod is made of steel rod 1.3 cm (1/2 inch) in diameter. The length of the pump rod is 0.9m (3 feet) longer than the well depth as measured for your well.

Bend one end of the pump rod to form a handle 25cm (10 inches) long, as shown in Figure 3. Thread the other end of the rod over a length of 5cm (2 inches). The pitch of the threads must be the same as the 1.3cm (1/2 inch) nuts, part 9.

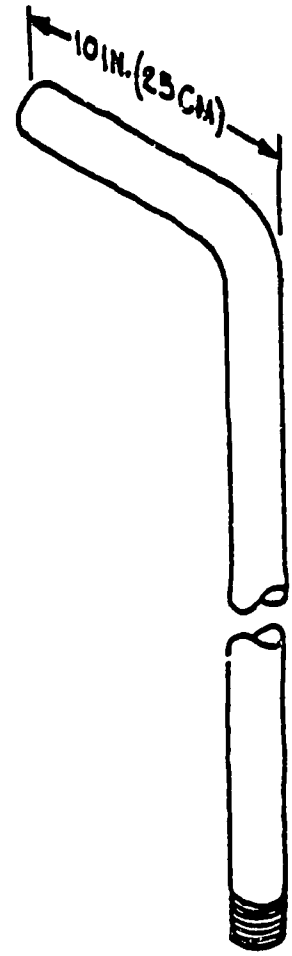

Figure 3. Pump Handle

Previous Page Blank

Pipe Cap (Part 2)

Drill a 1.3cm (1/2 inch) diameter hole in the top center of the pipe cap (Figure 4). The hole should be just large enough for the pump rod to slide through easily.

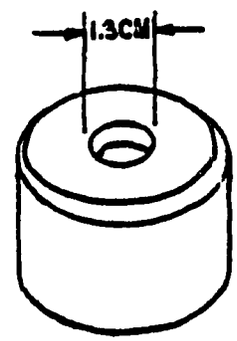

Figure 4. Pipe Cap

Top Pipe (Part 3)

The top pipe (Figure 5) is 51cm (20 inches) long and threaded at each end with standard pipe threads. Drill a hole for 1.9cm (3/4 inch) diameter pipe, about 20cm (8 inches) down from the top end of the pipe. Thread this hole for the spout (part 4). Note: The "Other Design" section of this manual gives an alternate design for the top pipe and spout.

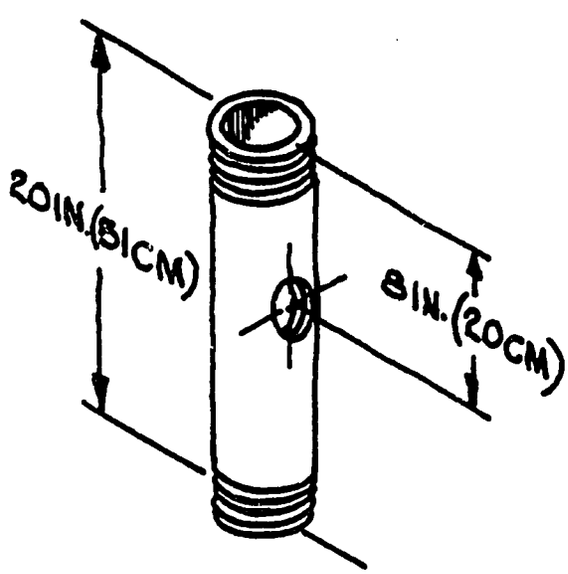

Figure 5. Top Pipe

Spout (Part 4)

The spout is made from 1.9cm (3/4 inch) inside diameter and 25cm (10 inches) long pipe. Thread pipe to screw into part 3. Then bend end of spout as shown in Figure 6.

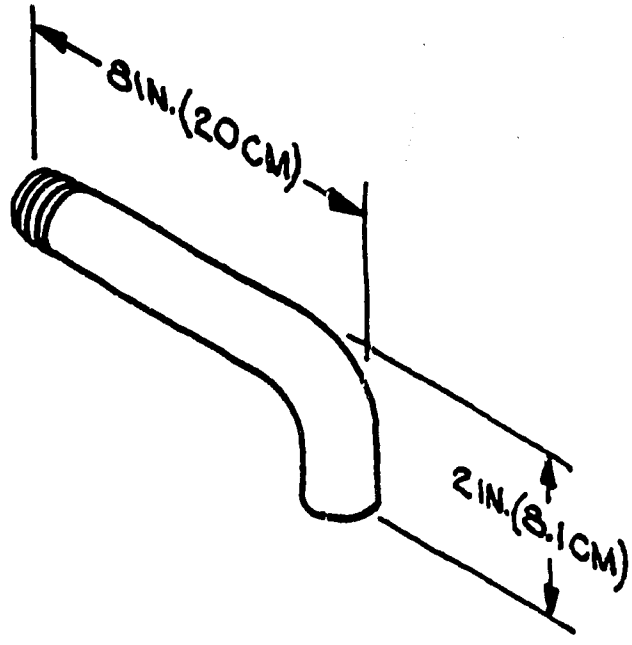

Figure 6. Spout

Mid Pipe (Part 6) and **Support Flanges** (Part 7)

Cut a piece of 5cm (2 inch) diameter steel pipe to a length of 51cm (20 inches). Thread both ends. This pipe will be the mid pipe, part 6 (Figure 7). Cut two pieces of steel angle to lengths of 25cm (10 inches). These are the support flanges, part 7. Now weld the support flanges to the mid pipe as shown in Figure 7 and in Figure 1. You may need to make a "jig" to hold the mid pipe and support flanges while you weld. Do not damage the pipe threads while you weld.

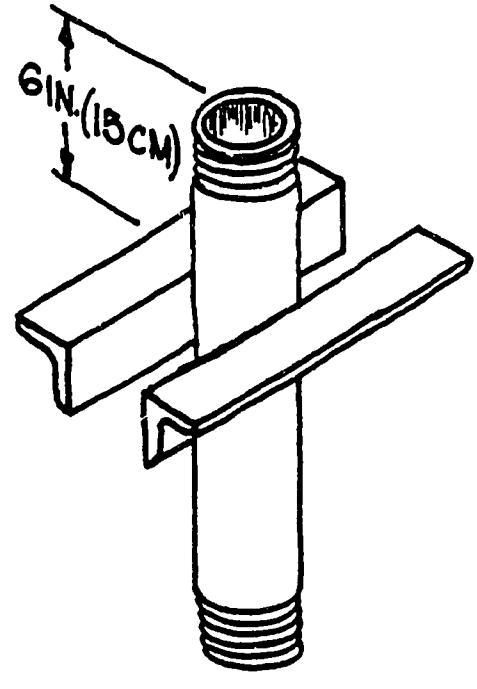

Figure 7. Mid Pipe

Well Pipe (Part 8)

The length of the well pipe depends on the depth of the well. The well pipe should be 40.6cm (16 inches) shorter than the depth of the well. If in doubt, make the pipe a little too long, rather than short. Thread both ends of the pipe, as shown in Figure 8.

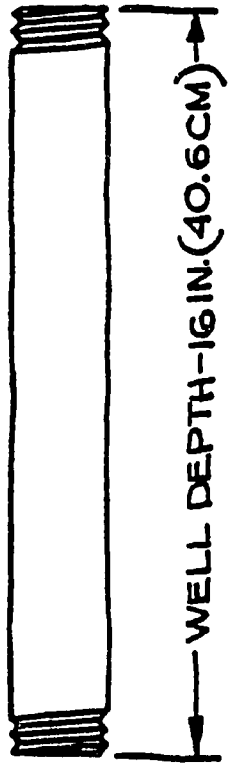

Figure 8. Well Pipe

If you do not have one piece of pipe that is long enough, use two or more pieces. Thread the ends of the pipe pieces and join them with extra pipe couplers (part 5).

Plunger Assembly
(Parts 9, 10, 11)

The plunger plate (part 10) is made of 0.6cm (1/4 inch) steel. Cut it in the shape of a disc or circle. The diameter "d" of the plunger plate should be about 0.3cm (1/8 inch) smaller than the inside diameter of the well pipe. For a 5cm (2 inch) diameter well pipe the plunger plate diameter should be 4.76cm (1-7/8 inches). Make the plate diameter a little too large rather than too small. If you do not have 0.6cm (1/4 inch) thick steel, you can use two identical pieces of 0.3cm (1/8 inch) thick steel.

Assemble the plunger to the bottom end of the pump rod (part 1) as shown in Figure 9.

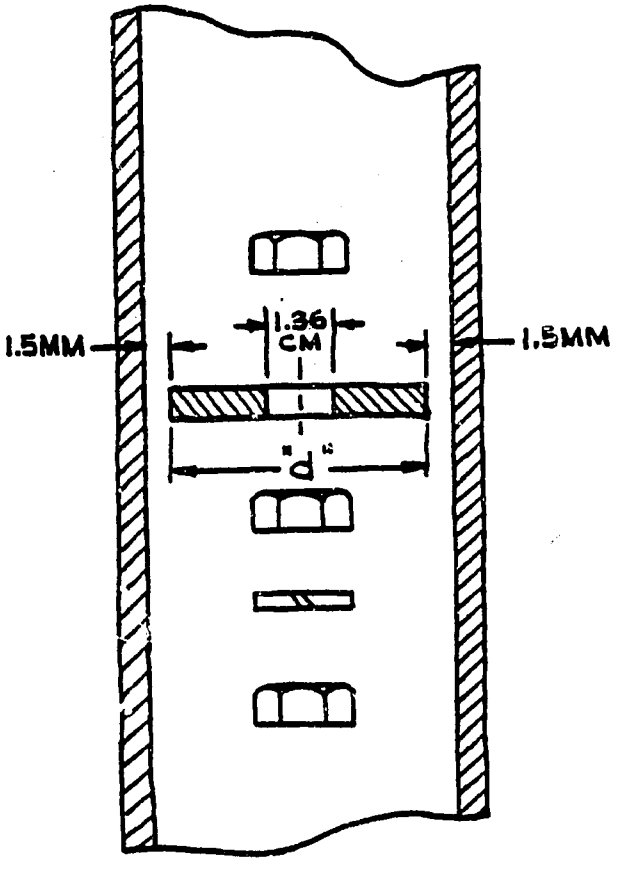

Figure 9. Plunger Assembly

Bottom Valve Assembly (Parts 12 and 13)

The reducer is a standard pipe fitting. It reduces the pipe diameter from 5cm (2 inches) to 2.5cm (1 inch). The steel ball, part 13, is 2.8cm (1-1/8 inches) in diameter. It will just block the hole in the bottom of the reducer, so it serves as a valve. This valve lets water into the bottom of the well pipe when the pump rod is lifted up quickly. On the down stroke of the pump rod, the ball keeps water from going out of the pipe back into the well.

ASSEMBLY OF THE PUMP

Before assembling the pump, make the cover plate of concrete as shown on Figure 10. The mid pipe and support flange assembly must be cast into the cover plate.

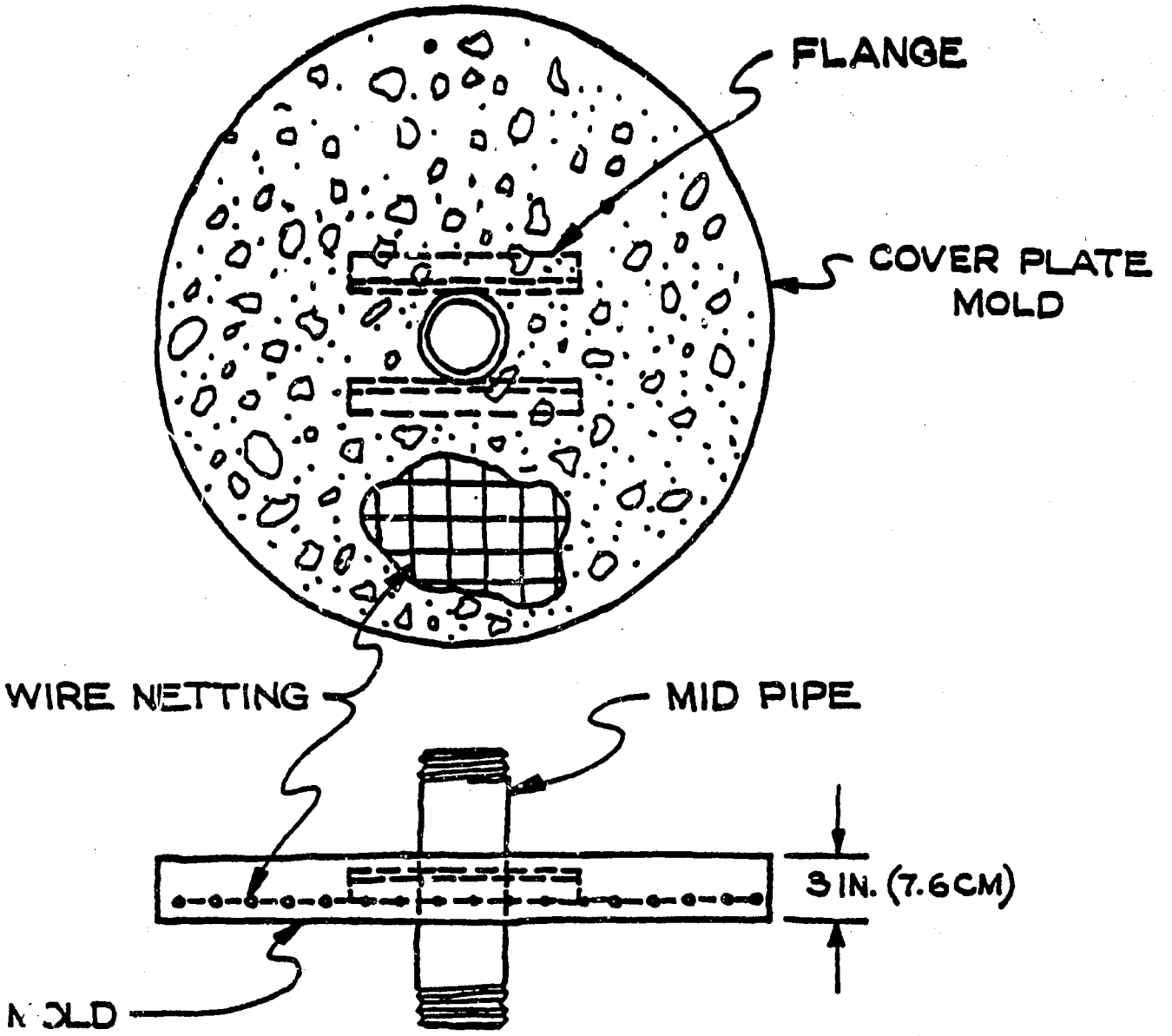

Figure 10. Cover Plate

COVER PLATE

The diameter of the cover plate should be large enough to more than cover the top opening of your well. Measure the size of your well top opening and then make the cover plate diameter about 25cm (10 inches) larger.

A mold for the cover plate can be made from a large carton or tin. Sides of the mold should be at least 7.5cm (3 inches) high.

Place the mid pipe assembly with welded flanges so that the flanges are about halfway down in the mold. Make a hole for the pipe in the bottom of the mold. If you have some sturdy wire netting, place the netting on the bottom of the mold on some gravel.

Fill mold with mixture of cement, gravel, and sand in the ratio of 1:2:4, using enough water to make the mixture wet through, but not runny.

NOTE: Be sure the mixture fills the space below the flanges and that the mid pipe is straight.

MATERIALS FOR WELL PIT LINING

It is necessary to line the sides of the well to keep the walls from falling in. This is done with concrete bricks that you can make. Two sizes of bricks are used: large ones and small ones. See Table 2 below for sizes.

TABLE 2. Mold Sizes

	LARGE BRICKS	SMALL BRICKS
A	6 IN. (15CM)	6 IN. (15CM)
B	15 ¼ IN. (38 CM)	11 ½ IN. (28.8CM)
C	13 IN. (32.5CM)	9 ¼ IN. (23.1CM)

These bricks are made in two wooden molds (see Figure 11).

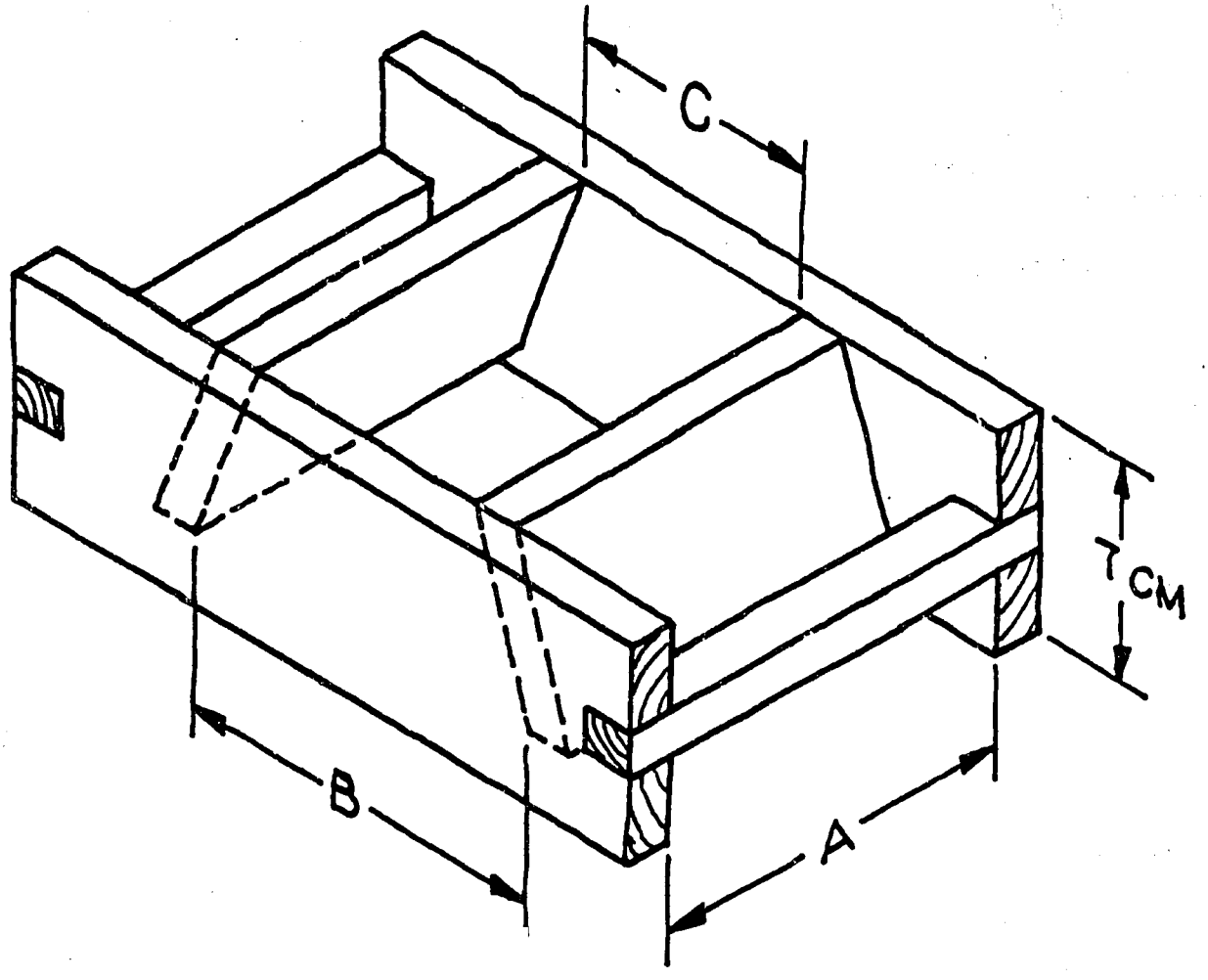

Figure 11. Brick Mold

You can make the bricks as follows:

- Place molds on smooth surface (like plywood) with larger openings down.
- Mix cement and sand (ratio 1:10), add water slowly and stir to make a thick mixture.
- Put cement/sand mixture in molds. Tamp down on the cement. Lift mold, and let bricks harden while you make more.

LINING THE PIT

- Remove the water from the pit (save two bucketfuls).
- Clean out the bottom of the well. It should be about 1.1 meters (44 inches) across and the bottom should be level.
- At the bottom of the pit, make a circle from eight large bricks (see Figure 12). Make sure the bricks are level, otherwise the construction will be tilted. No mortar is needed.

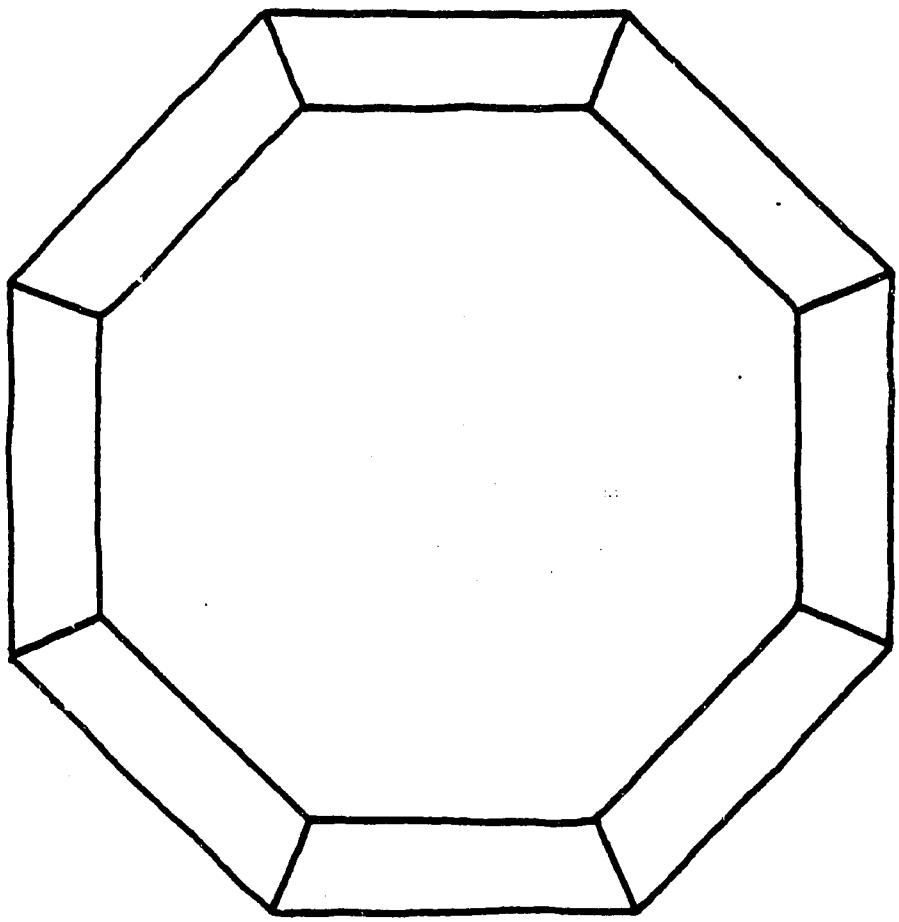

Figure 12. Base Row of Bricks

- On top of that row, make a circle of eight large bricks and one small one. The next row should have six large bricks and three small ones.

- Continue in that fashion until the top row has nine small bricks. If the top row of nine small bricks is not yet at ground level, then continue with circles of nine small bricks (see Figure 13).

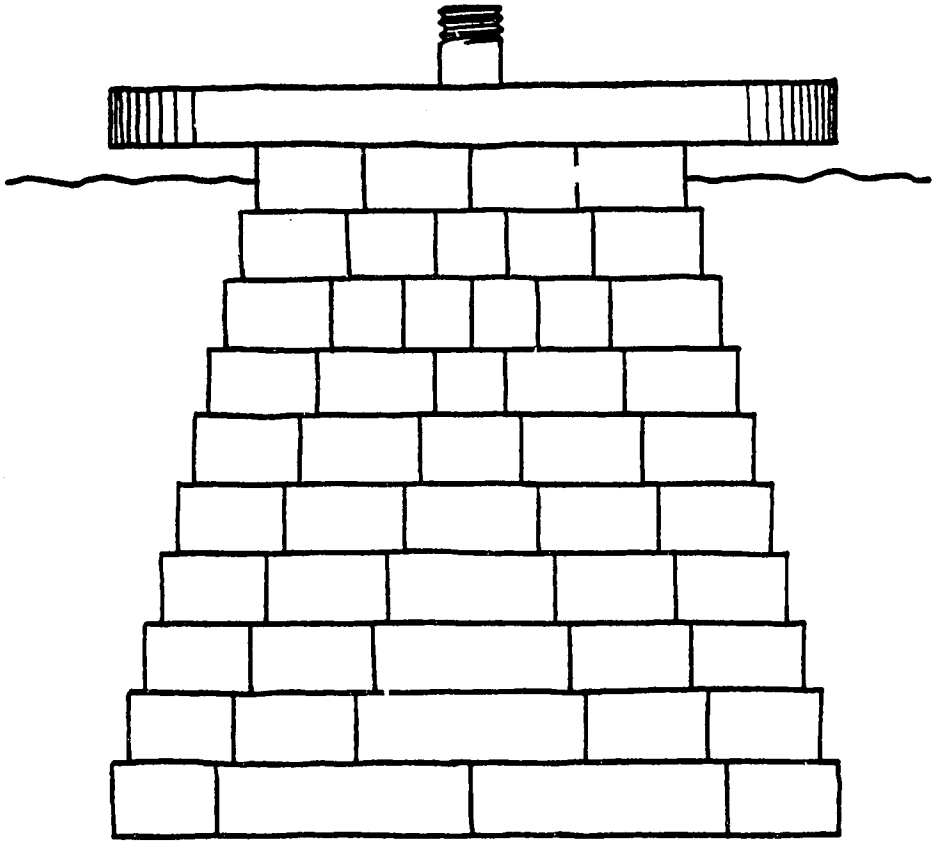

Figure 13. Well at Ground Level

Note: You can calculate how many blocks you will need by remembering that it takes nine concrete blocks for a depth of 15cm (6 inches). For example, a well 3 meters (9 feet 9 inches) deep would require 300/15 = 20 circles of nine blocks each, or 180 blocks. You might want to dig your well deep enough so that the last layer of concrete blocks is exactly at ground level.

MOUNTING THE PUMP

- Screw the reducer (part 12) onto the well pipe (part 8), and drop in the ball (part 13).

- Using one coupler (part 5), assemble the well pipe (part 8) to the mid pipe (part 6).

- Move the cover plate assembly and the well pipe assembly onto the well pit.

- Using one coupler (part 5), assemble the top pipe (part 3) on the mid pipe (part 6).

- Put the pump rod (part 1) through the pipe cap (part 2).

- Put the plunger plate assembly on the pump rod, and make sure the nuts are tightened firmly.

- Place the pump rod assembly onto the well pipe, and tighten the pipe cap (part 2).

- Screw the spout (part 4) into the top pipe (part 3).

IV. OTHER DESIGNS

You may find some of the designs in this section easier to build with the materials and parts that you can obtain. The two assemblies that are covered in this section are: 1) the top pipe and spout, and 2) the plunger assembly.

TOP PIPE AND SPOUT

You do not have to drill the top pipe or tap threads with this design for the top pipe and spout. Instead of parts 3 and 4 of the Pump Parts List, use parts a, b, and c as shown in Figure 14.

Part a, two pieces needed, is made from 25cm (10 inch) lengths of 5cm (2 inch) diameter steel. Thread both ends of these pipes.

Part b is a standard "T" fitting for 5cm (2 inch) diameter pipe.

Part c is a 25cm (10 inch) length of 5cm (2 inch) diameter steel pipe. To make this part, start with a pipe much longer.

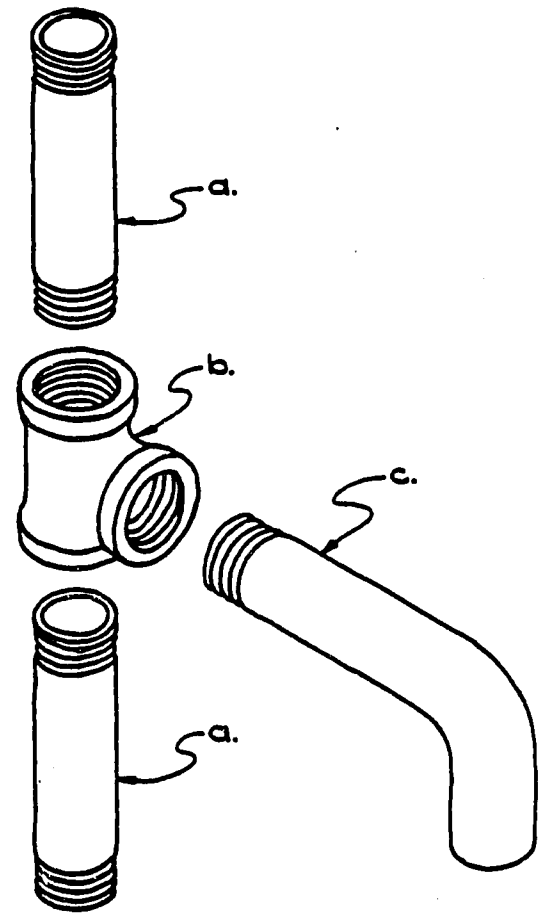

Figure 14. Alternate Design

Previous Page Blank

First thread the pipe at one end. Then, about 20cm (8 inches) from the threads, bend the pipe as shown on Figure 14, and cut the pipe just after the bend.

PLUNGER ASSEMBLY

For wells deeper than 3.7 meters (12 feet) a plunger that makes a better seal with the well pipe will let you pump more water. The design for this plunger assembly is shown in Figure 15. The advantage of this design is that you can pump more water. But the seal will wear out and will have to be repaired once in a while.

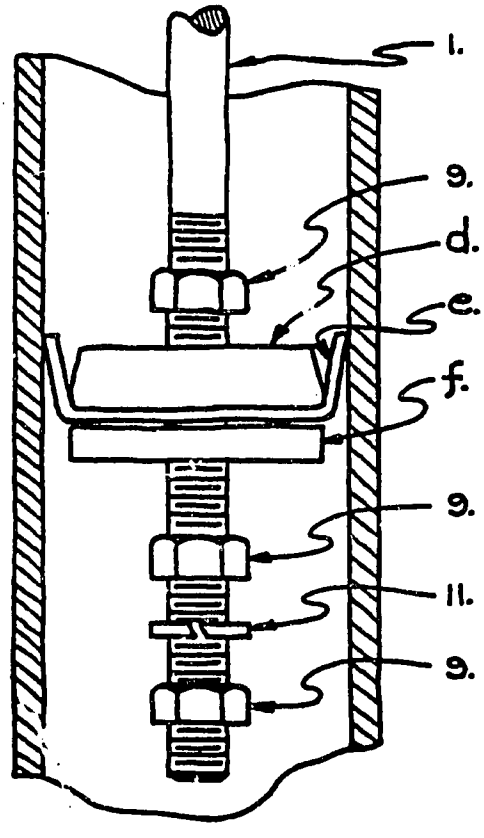

Figure 15. Plunger Assembly

Part d is a circular plate of 0.65cm (1/4 inch) thickness steel. The diameter of the plate at the bottom is 4.4cm (1-3/4 inches). Taper the edge with a file so the diameter at the top is about 1.27cm (1-1/2 inches) diameter. Drill a hole 1.27cm (1/2 inch) diameter at the exact center of the circular plate.

Part e is a circular piece of flexible leather of about 0.32cm (1/8 inch) thickness. The diameter of the leather is 7.6cm (3 inches). Drill or cut a hole 1.27cm (1/2 inch) diameter in the center of the leather.

Part f is a steel washer of 0.32cm (1/8 inch) thickness. The diameter is 4.4cm (1-3/4 inches). Drill a hole 1.27cm (1/2 inch) in the center.

Assemble parts 9, d, e, f, and 11 onto the pump rod (part 1). Tighten the nuts very tight. The pump rod should move down easily. It may take a number of strokes to break in the new leather seal. A drop of oil may help. Rub the oil on the leather to make it flexible.

If this assembly still is hard to move, you may have to file down the diameters of parts d and f and retry the assembly.

V. OPERATING THE PUMP

The pump must be primed with water the first time it is used. To do this, turn the spout, part 4, upward. Pour a bucket of water in the spout.

When the handle on the pump rod is moved up and down rapidly, water will pour out of the pump. The water may be dirty at first and have some mud in it, but it should clear up in a few days. You should be able to pump about 5 gallons per minute. If you cannot get at least 3 gallons per minute when pumping rapidly, you can replace the plunger plate (part 10) with one of slightly larger diameter and try again. Or, you can replace part 10 with the plunger assembly shown in the section on "Other Designs."

This is a very simple pump, and it should last a long time.

MAINTAINING THE PUMP

If the pump won't pump water:

- The pump may need to be primed with water. Turn the spout (part 4) up, pour in a bucket of water. Now try to pump.

- If pump does not work after priming, the plunger assembly (parts 9, 10, and 11) may be loose. Loosen the pipe cap (part 2) and draw out the pump rod. If the plunger assembly is loose, tighten the nuts (parts 9). Be sure that the split washer (part 11) is in place. If the split washer is missing, replace it and retighten the nuts.

- If neither of the above is the problem, and there is water in the well, the ball valve (part 13) may be stuck, or something

Previous Page Blank

may be stuck under the ball that keeps the ball from sealing. Remove the pump rod, then remove the pipe assembly (parts 8, 12, and 13). If debris from the well is blocking the ball, remove the debris and wire a piece of screening around the bottom of the pipe. If the ball sticks in the reducer (part 12), clean the ball and reducer, then reassemble the pump.

MAINTENANCE FOR "OTHER DESIGN" PLUNGER ASSEMBLY

If you have built your pump using the plunger assembly shown in the section "Other Designs," you should do the following maintenance once a year:

- Remove the pump rod assembly by first loosening and removing the pipe cap (part 2). Inspect the plunger assembly for:
    - Wearing of the leather (part e). If the leather has worn through, or nearly worn through, replace it with a new piece of leather.
    - Rub a drop of oil on the leather to make it softer.
    - Tighten the nuts (parts 9).
- Reassemble the pump.

For a free catalogue listing this and other VITA publications, write to:

Publications Service
Volunteers in Technical Assistance
3706 Rhode Island Avenue
Mount Rainier, Maryland 20822 USA