PN-AAP-213
ISN: 33230

DRAFT

REGION, FARM AND AGROECOSYSTEM CHARACTERIZATION:

The Preliminary Phase in a Farm System Research Strategy

Robert D. Hart
CATIE
Turrialba
COSTA RICA

Presented at the 72nd Annual Meeting of the American Society of Agronomy. Detroit, Michigan. Nov. 30 - Dec. 5, 1980.

REGION, FARM AND AGROECOSYSTEM CHARACTERIZATION:

The Preliminary Phase in a Farm System Research Strategy*

Robert D. Hart**

A descriptive or diagnostic phase is a first step in any farming systems research, and all international, regional and national research centers involved in this type of research include this phase within their research strategy. Some groups conduct formal, detailed surveys, others informally visit an area and talk to farmers and subjectively decide how to proceed with the research.

Most researchers agree that statistically-sound sampling followed by formal surveys is the ideal way to obtain a good description of an area. However, often not enough information exists about the population to design an adequate sampling procedure, and in many countries, field technicians are simply tired of conducting surveys for other institutions and receiving little in return. This dissatisfaction with surveys has led many research groups to de-emphasize formal diagnostic activities and to emphasize informal multi-disciplinary studies such as proposed by Hildebrand (1978).

---

*Presented at the 72nd Annual Meeting of the American Society of Agronomy. Detroit, Michigan. Nov. 30 - Dec. 5, 1980.

**Ph. D., Production Systems Specialist, Annual Crops Program, CATIE.

Farming systems research groups vary in their use of systems concepts. Some groups have simply changed the name, not the direction, of their efforts in order to take advantage of current funding trends, but most groups at least operate within the spirit of a "systems approach", taking a holistic view of agricultural phenomena, even if little use is made of basic systems tools such as diagraming, model building or simulation techniques.

Systems concepts are almost never applied during the initial descriptive stage of the research strategies used by farming system research groups. Later research activities designed to understand or find alternatives to the agricultural systems used by farmers are hindered by a lack of basic descriptive information. Conceptualizing an agricultural phenomenon as a system during the initial descriptive stage often would have produced the needed information.

In this paper I present a characterization methodology based on a systems approach. Emphasis is placed on qualitative description, rather than quantitative detail. The methodology is more formal than that proposed by Hildebrand, but less formal than the preliminary survey approach. Informal studies and formal surveys are not, of course, mutually exclusive. The qualitative systems characterization produced by the methodology described below can be used to identify the phenomena that merit quantitative studies.

Hierarchical agricultural systems

Systems are arrangement of components that function as a unit. Agricultural phenomena as varied as physiological processes within a crop, crop rotation, crop-animal interactions, labor migration and credit distribution can all be conceptualized as agricultural systems. A research team beginning work in a new area is faced with the task of describing and understanding the important systems within the area and understanding the relationships among them.

There are various possible relationships among systems. Systems can compete for the same resource (crops and weeds for water; two farms for the same credit) or the output of one system can be the input to another (crop system producing maize to feed chickens; fruits produced by a farm and used by a cannery). Another systems relationship that can be used to order agricultural phenomena is the hierarchical relationship between a system and its subsystem (component). For example, the production systems within a farm are subsystems of the farm system; the crops that form a cropping system are subsystems of that cropping system.

Figure 1 is an example of a set of hierarchical systems. Most farming systems research groups begin by identifying a specific region to be studied. For this reason the largest system included in the hierarchy described in Figure 1 is a regional system.

The phenomena that interact to form a regional system can be grouped together in various ways. In Figure 1, I took the traditional economic geography approach of dividing the region into three sectors (Thoman,

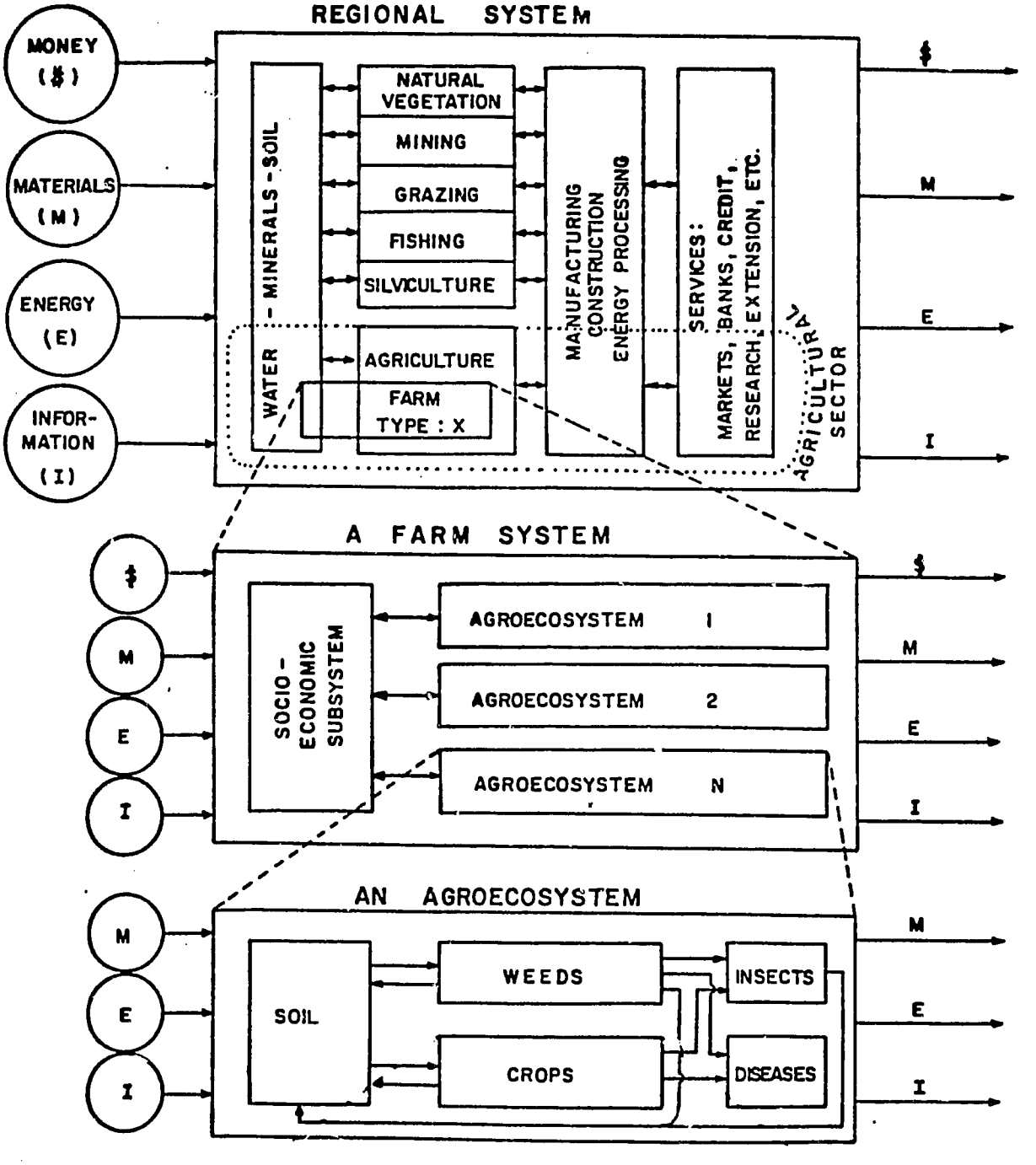

Figure 1. The hierarchical relationships among regions, farms and agroecosystems.

Conkling, and Yates, 1968): a primary sector that includes processes that take substances directly or indirectly from the natural environment (agriculture, mining, etc.); a secondary sector that processes outputs from the primary sector (manufacturing, construction, etc.); and a tertiary sector that involves services rather than transfer of goods. Money, materials, energy, and information flow into and out of the region and among the regional subsystems.

In the hierarchy presented in Figure 1, I selected a farm system (subsystem of the region) for closer inspection. The farm system is conceptualized as a set of agricultural ecosystems (agroecosystems) and a socioeconomic subsystem. Money, materials, energy and information flow into and out of the farm system and among the farm subsystems. In Figure 1, a crop agroecosystem (as opposed to an animal agroecosystem) was selected for closer inspection. Materials, energy, and information flow into and out of the system and materials cycle and energy flows between the subsystems.

Any of the agroecosystem subsystems could be selected for more detailed description. In agroecosystems research programs, the different specialists are usually assigned this task. The soil specialist characterizes the soil, the entomologist the insects, the agronomist the crops, etc.

An initial characterization methodology

The methodology outlined below was developed during a series of "practical experiences" designed for a graduate course in agricultural systems. The primary objective was to allow students to apply systems concepts to the real world. As a result of a first experience in Costa Rica in February, 1980, a characterization methodology was designed and evaluated in the region of La Esperanza, Honduras in July, 1980.

Selected results from the La Esperanza study are presented in this paper to illustrate the type of output that the methodology produces.

The methodology has several general characteristics:

1. All activities are conducted intensively within a known time limit.
2. The participating technicians meet frequently to define short-term objectives, divide into working subgroups, meet to summarize conclusions, define new short-term objectives and reorganize into new working subgroups.
3. Emphasis is placed on qualitative description; quantitative data is gathered primarily from secondary information sources.
4. Information is collected and synthesized sequentially beginning with general regional information, followed by farm system descriptions and finally by characterization of specific agroecosystems.

5. Extensive use is made of systems diagrams; they serve as an aid to forming a mental model to be used during information collection and as a way to summarize systems information.

The methodology can be subdivided into three basic phases: (1) synthesis of secondary information, (2) intensive field studies, and (3) summary and analysis. Each of these phases can be subdivided into sequential steps. These steps and the relationships among them are summarized in Figure 2.

The first step within the first phase is a meeting with the participating technicians to explain the methodology and the objectives of the study. Group motivation is extremely important. If the group has had little exposure to system concepts, an intensive short-course emphasizing group practicals can serve both as a motivating force as well as a useful introduction to the concepts behind the methodology. The group is then divided into three sector subgroups and given a time limit to gather information relevant to the primary, secondary and tertiary sectors within the region selected for study. The time limit will depend on the quantity and availability of information, and on the amount of time and people available. The graduate students conducting the study at La Esperanza were given one week to complete this phase because they were taking other courses at that time. The first phase finishes with a meeting where representatives of each sector subgroup summarize and present the information they collected.

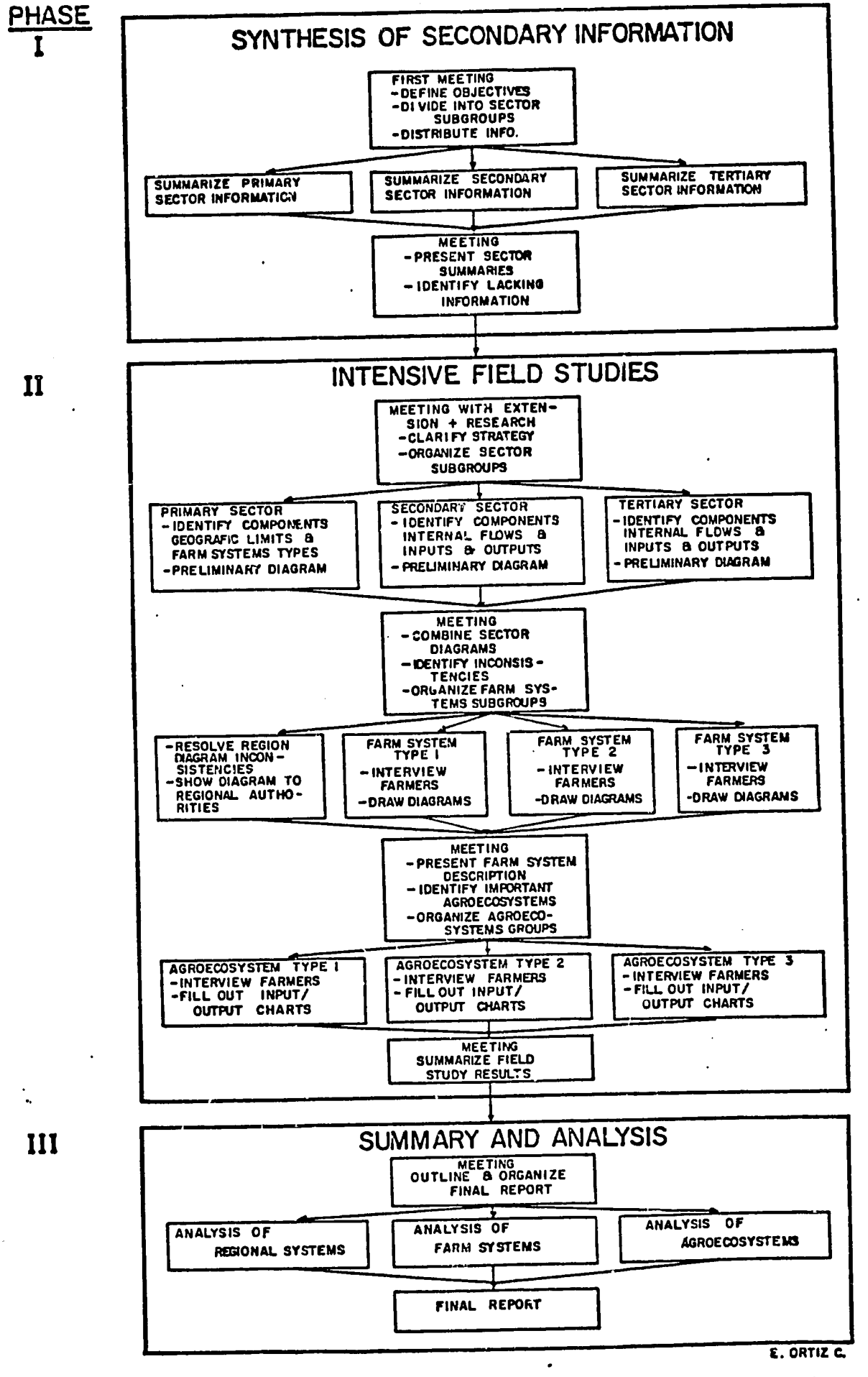

Figure 2. Three phases, and the chronological sequence of activities within each phase, forming a region, farm and agroecosystem characterization methodology.

The intensive field study phase of the methodology begins with a meeting with the representatives of regional agricultural institutions to explain the objectives of the study and to assign members of the group to each of the sector subgroups. The assignment to different groups should be based on the technical interests of the participants, but leadership qualities and overall competence must also be considered. It should be noted that the primary sector group should include the potential leaders of the farm system subgroups.

All three sector subgroups are given one day to identify the components of their sector and its inputs and outputs, specifying if the flow comes from or goes to other sectors outside the region. At the end of the day (usually late at night), each subgroup must draw a rough sector diagram and present it to the total group. Specific attention is paid to the inconsistencies between sector diagrams; often one sector subgroup identifies an input from another sector that was not noted as an output by that subgroup.

In addition to drawing the sector diagram, the primary sector subgroup, who spends most of the first day traveling around the region talking to farmers, is asked to define the geographic limits of the region and to design a farm system classification for the area. This classification becomes the basis for reorganizing the total group into farm system subgroups for the intensive field studies done on the second day. Besides the farm system subgroups, an additional subgroup is formed and is assigned the tasks of resolving the inconsistencies between the sector

diagrams, drawing a regional diagram, and evaluating the diagram by showing it to local authorities (mayors, bank presidents, etc.).

Each of the farm system subgroups, led by a member from the primary sector group, divides into teams to interview farmers. Instead of using a questionaire, each team asks questions on the basis of a mental model of the farm. Each team is asked to draw diagrams of the farm systems that were visited. The diagrams produced are often less important as an end-product than as a conceptual stimulus to understand the farm as a system.

At the end of the second day, the farm system diagrams done by each subgroup are presented to the total group. Special attention is given to the agroecosystems found on the farms, since the group must select the systems to be studied the next day. Various criteria can be used for this selection, such as frequency, area under cultivation, or the inclusion of a specific crop or animal of present or projected importance at the regional level (for example, a crop that the region exports). During the third day of the field study phase, the total group is organized into subgroups by agroecosystem.

The agroecosystem subgroups spend the day interviewing farmers. Each group is asked to identify the inputs and outputs to the systems and the spatial and chronological arrangement (cropping pattern) of the crops. Farmers are also asked for a sequential narration of their management activities, from land preparation to the last harvest. The third day of intensive field studies finishes with a meeting to discuss the agroecosystem data collected by the various subgroups. With this

meeting the second phase of the methodology comes to an end.

The summary and analysis phase of the methodology is important not only because its end-product is a final report. The integration of the information collected during the first phase (synthesis of secondary information) with the information collected during the second phase (field studies) is an important step in the characterization process. Inconsistencies can be used to evaluate the information collected. The final report is structured by hierarchical systems, and different members of the group are asked to write region, farm systems and agroecosystems chapters. Extensive use is made of the diagrams drawn during the study. Often the groups need to be reminded that the diagrams are not ends-in-themselves, only analytical tools. The diagrams are, however, a useful way of presenting and summarizing systems information.

Selected results from La Esperanza, Honduras

The results obtained for the Region, Farm and Agroecosystem Characterization Methodology will vary with the size and complexity of the region under study, the time invested, the technical level of the participants and the availability of secondary information. However, selected results from a study conducted in La Esperanza, Honduras by 20 graduate students from the Centro Agronómico Tropical de Investigación y Enseñanza (CATIE) in Turrialba, Costa Rica, can be used to illustrate the type of results that can be obtained by using this methodology.

The final report from the La Esperanza study included regional, farm and agroecosystem diagrams and 80 pages of text. The report included a material and methods chapter (a summary of the methodology) and chapters summarizing what was learned about the regional system, various types of farm systems within the region, and the important agroecosystems found within the farm systems.

A diagram of the La Esperanza regional system is presented in Figure 3. Inputs into the region are shown as circles, flow of money as dotted lines, and flows of materials, energy, and information as solid lines. Outputs from the region and from each sector are depicted as arrows. In the diagram, money flowing in an opposite direction to materials, energy and information, indicates an economic transaction. For example, fuels are inputs to the region but for every gallon of fuel that enters, there is a corresponding output of money to pay for the fuel.

The primary, secondary and tertiary sectors are shown as subsystems of the region. The important components of each sector are also included in the diagram. For example, the primary sector components are potatoes, maize, beans, vegetables, fruits, wheat, cattle, pigs, chickens, bees and two non-agricultural components, forestry and a mining operation to extract clay that is sent to a tile factory and to a ceramic factory in the secondary sector. Other secondary sector components include a winery that produces potato wine and a sawmill. The private and government services available within the region are listed within the tertiary sector subsystem.

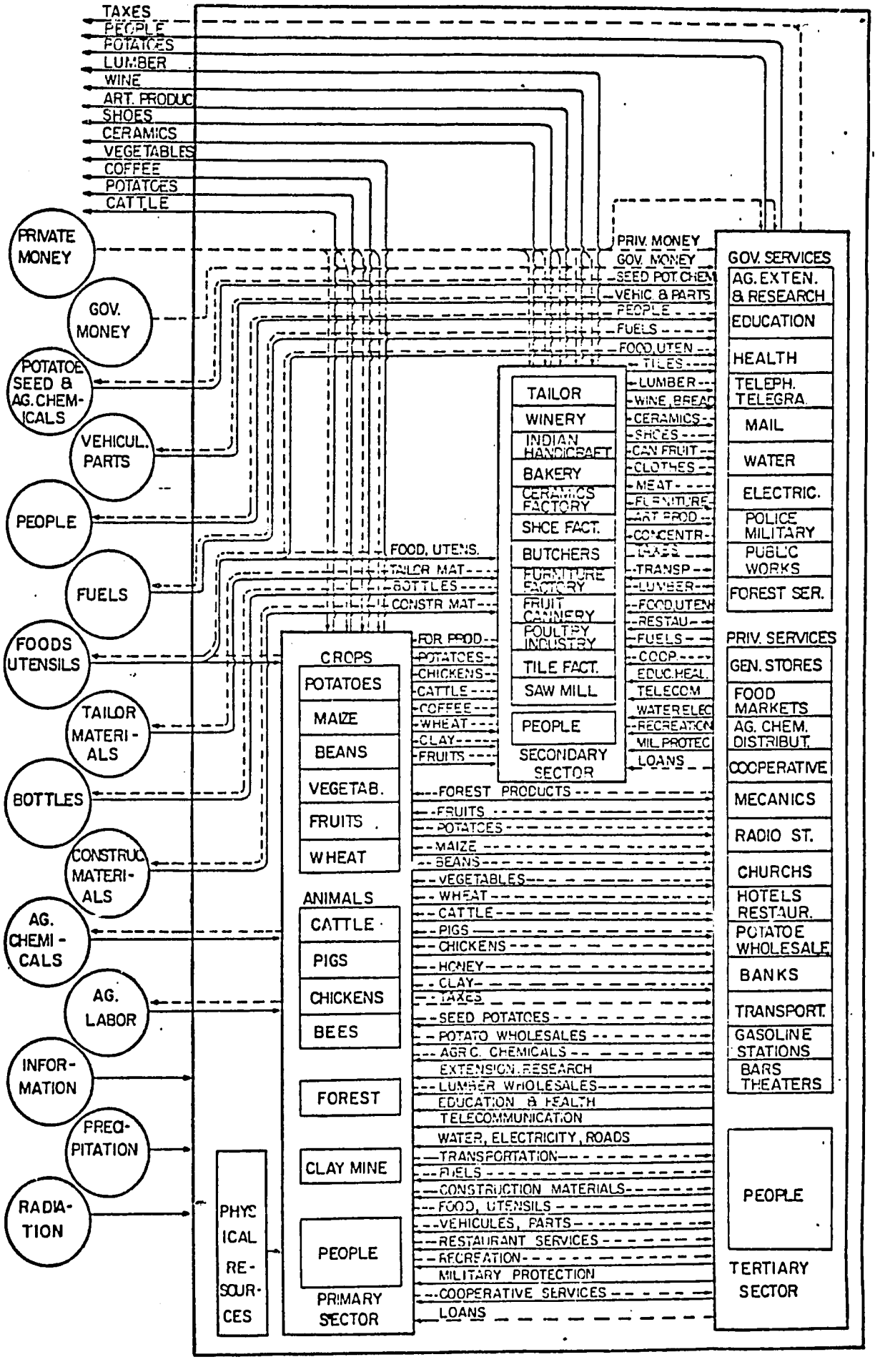

Figure 3. The La Esperanza region of Honduras as a regional system.

13

The flows of the services to the primary and secondary sector are shown as arrows between these subsystems. Outputs from the region, such as potatoes, lumber, wine, etc. are depicted at the upper left of the diagram.

In the regional diagram, the agricultural components of the primary sector are simply listed; the farm system studies are esentially descriptions of the different combinations of these components. Five farm system types were identified in the La Esperanza region: (1) subsistance farms with less than o.5 ha of potatoes, (2) small commercial farms with 0.5 to 4.0 ha of potatoes, (3) large commercial farms with more than 4.0 ha of potatoes, (4) cattle farms, and (5) fruit farms. Examples of the first two farm system types are presented in Figures 4 and 5, respectively.

The farm system diagrams include: the farm inputs and outputs; the agroecosystems found within the farms; the total area, inputs and outputs of each agroecosystem; and the commodities stored within the socioeconomic subsystem. The "tank" symbol, as well as the circle and solid and dashed line symbols, are part of an energy-based symbolic language developed by Odum (1971).

The La Esperanza study group identified the following three types of agroecosystems as economically, or potentially economically, important: (1) potatoes followed by intercropped maize and beans, (2) potato and vegetable rotations, and (3) fruit orchards.

The agroecosystem study group identified various types of potato-maize-beans rotations, as shown in Figure 6. Farmers were found to be

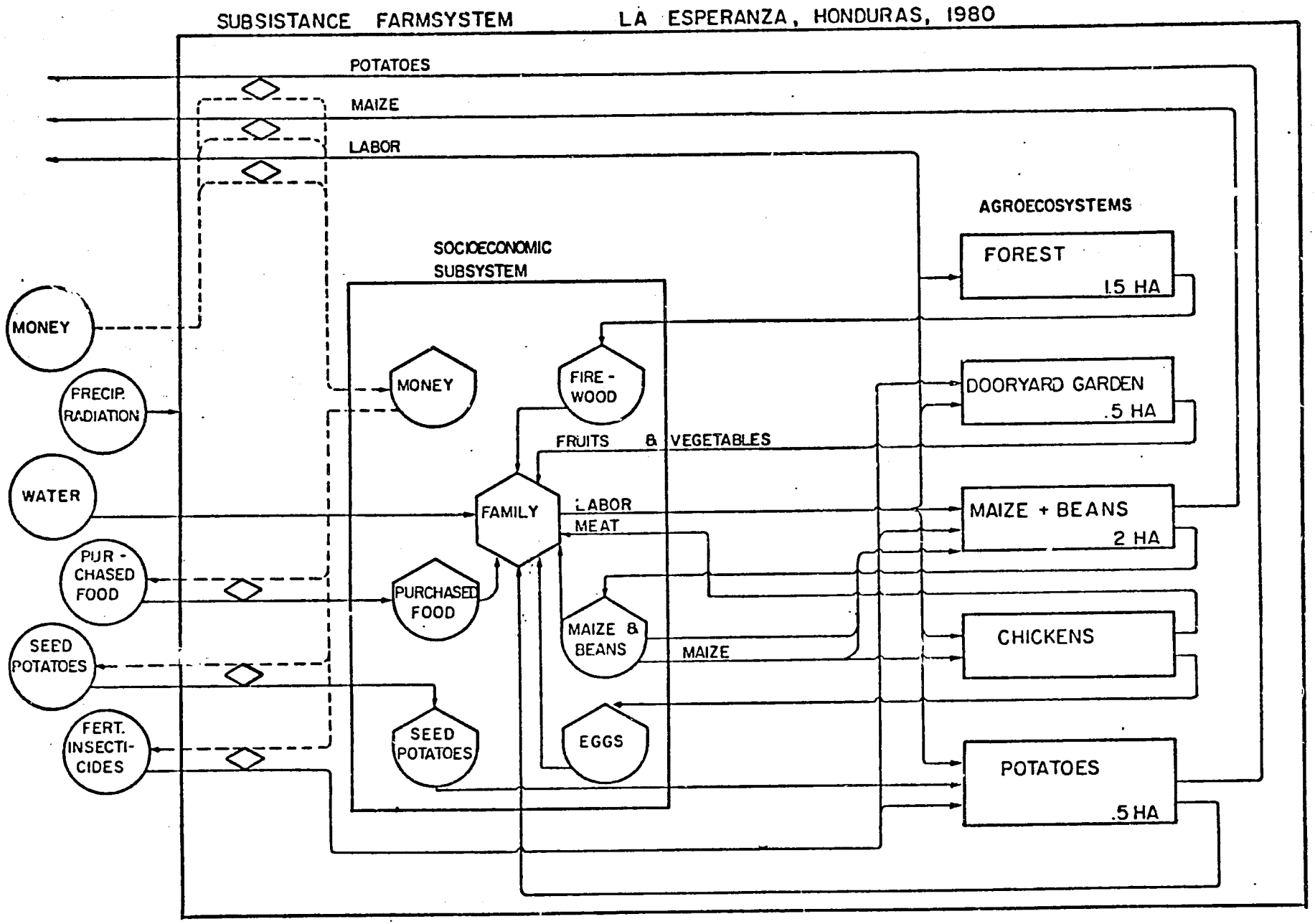

Figure 4. A typical subsistance farm system in La Esperanza, Honduras.

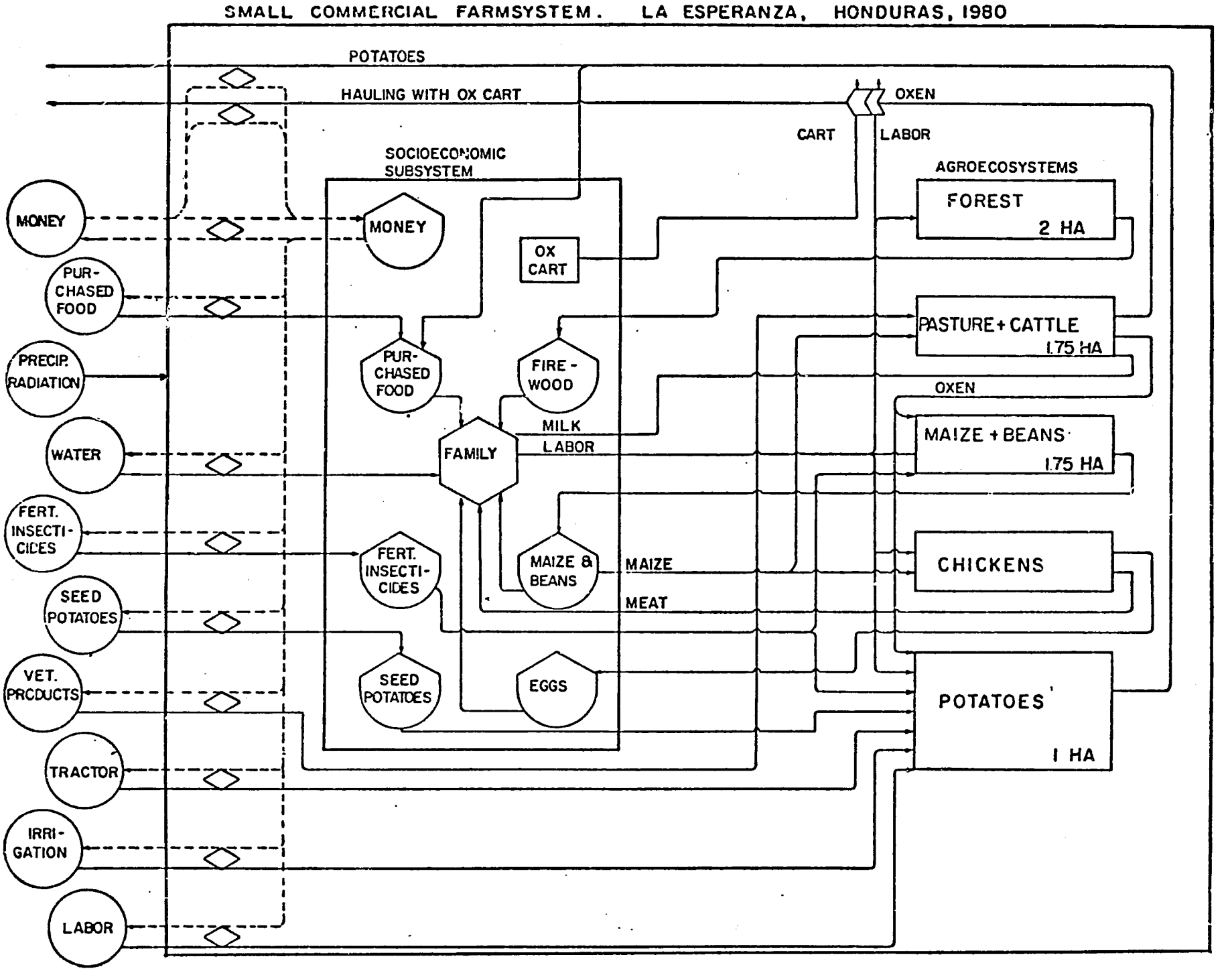

Figure 5. A typical small commercial farm system in La Esperanza, Honduras.

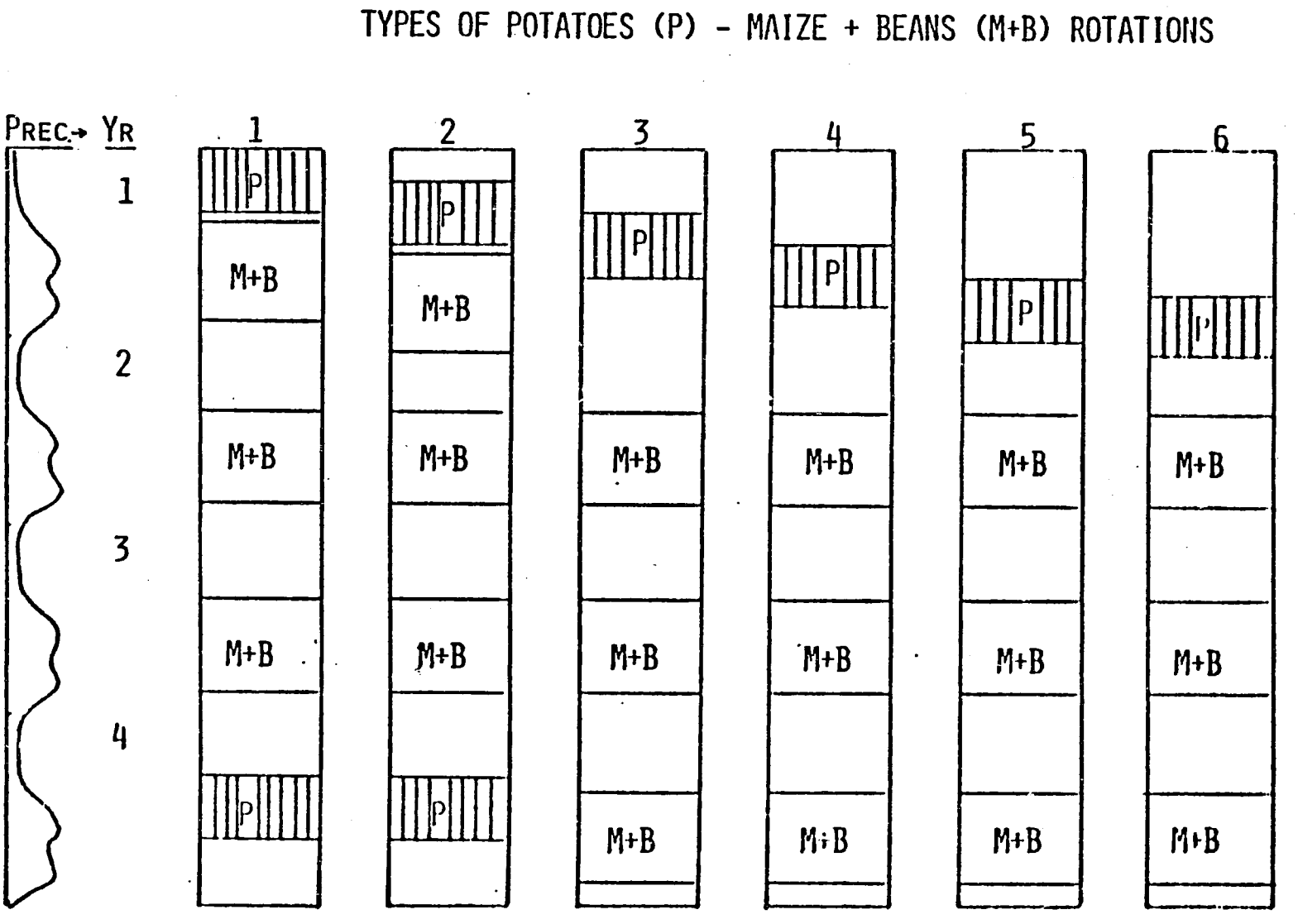

Figure 6. Different types of potato, maize and bean rotations in La Esperanza, Honduras. Potatoes are planted during the dry period, under irrigation, as well as during the wet season. During the three years between potato crops, maize and beans are intercropped.

very aware of a residual fertility affect produced by growing potatoes with high fertilizer applications. The maize yields of the maize and bean intercrop system the year after planting potatoes was twice as high as obtained three years after planting potatoes. Potatoes are not planted sequentially because of the carry-over of potato diseases. The different types of rotations found in the area were related to the possibility of irrigation during the January to May dry season.

Linkage with successive research activities

An important quality to consider in the evaluation of an initial characterization methodology is its linkage with the other activities that form the farming systems methodology. Some research groups use a strategy that contemplates the design of an alternative to the farmers' systems during the first year of field research. Research groups using this type of strategy will probably find it necessary to conduct farmer surveys in order to quantify the detailed management aspects of the agroecosystems they hope to modify.

Farming systems research groups that use a strategy that allows more time to study the farmers' present systems before proposing any modification could use the results from the initial characterization methodology to design future diagnostic activities. These activities might include regional studies to quantify regional phenomena such as credit, marketing, labor movement, climate and soils; diagnostic farm system studies, such

as detailed case studies or multiple-visit studies; and exploratory experiments with the agroecosystems.

Potential agroecosystem alternatives cannot be designed without some understanding of the farm systems within which they function. Farm systems cannot be understood without some understanding of the region. Some type of a systems characterization methodology is an obvious necessity. The methodology summarized in this paper is based on systems principles and therefore may be more compatable with farming systems research than traditional reductionist characterization methodologies.

Literature cited

1. HILDEBRAND, P. E. 1978. Generating technology for traditional farmers: a multidisciplinary methodology. Presented at the conference on: Developing economics in agrarian regions: a search for methologies. Bellagio, Italy. (Mimeograph).

2. ODUM, H. T. 1971. Environment, power, and society. Wiley-interscience, Div. of John Wiley and Sons, Inc., New York. 331 p.

3. THOMAN, R. S.; E. C. CONKLING; and M. H. YATES. 1968. The geography of economic activity. McGraw Hill, New York. 561 p.