PN-AAP-198
ISN:33219

SMALL RUMINANT RESEARCH WITH COMMUNITY DEVELOPMENT OBJECTIVES: PRELIMINARY IDEAS TO CONSIDER IN THE DESIGN OF A PROJECT IN PERU

by
Robert D. Hart

Winrock International
Morrilton, Arkansas

July 1983

SMALL RUMINANT RESEARCH WITH COMMUNITY DEVELOPMENT OBJECTIVES: PRELIMINARY IDEAS TO CONSIDER IN THE DESIGN OF A PROJECT IN PERU

Robert D. Hart
Winrock International

The objective of this report is to outline a general conceptual framework and a general research strategy that might be useful in the design and implementation of a small ruminant research project in Peru. The general approach that was taken was to first identify a hierarchy of systems that connects the target research unit (in this case, the sheep production system) to the target development unit (in this case, the communities in a geographic region). Next, a research strategy composed of both parallel and sequential activities was designed.

The conceptual framework and research strategy discussed below was developed as a direct result of 1) discussions with scientists in Peru participating in the Small Ruminant Collaboration Research Project (SR-CRSP), 2) conversations with scientists working with other research and development projects in Peru (in particular, the Andean Crops Project), 3) seminars and discussions at the Instituto de Investigacion y Promocion Agropecuaria (INIPA), Instituto Veterinario de Investigaciones Tropicales de Altura (IVITA), and the National University in Cusco, 4) secondary information describing peasant communities in Peru (in particular, publications from the Andean Crops Project and a M.S. thesis and articles by Keith Jamtgaard, and 5) two one-day field trips to two communities near Huancayo and one community near Cusco.

This report was requested by the Small Ruminant Collaborative Research Support Project. Support for the time spent in Peru was provided by this project and Winrock International.

ANDEAN PEASANT COMMUNITIES

The extensive anthropological and sociological information describing Andean Peasant Communities (Comunidades Campesinas) cannot be summarized

in a few paragraphs. But, the design and implementation of a project directed at peasant communities cannot be discussed without, at least, outlining the general characteristics of peasant communities. The following predominant characteristics must be considered.

1. Community organizational structures have Inca, Colonial Spanish, and modern Peruvian roots. Colonial Spanish organizational structures were superimposed upon Inca organizational structures; Colonial structures were then modified by modern Peruvian land reform laws that applied a cooperative structure composed of administrative and "watch dog" (vigilancia) councils.

2. Communal vs private organizational structures vary considerably from community to community. On one end of the continuum are communities where all land resources are communally owned and distributed; on the other end of the continuum are communities that are really nothing more than a group of small farmers that live around the same town square. Most communities in highland Peru fall between these extremes. The present tendency is towards more privately controlled resources, but communal resources and communal decisionmaking are still predominant characteristics of these communities.

3. Both community-level and family-level agricultural production usually involves both crops and livestock (agropastoral production systems) with a high level of crop/livestock interaction. Manure and animal traction are inputs to crop production, and crop residue and fallow areas provide inputs to livestock production. The primary livestock feed resource is rangeland during the wetter months (September-May) and crop residue and fallow land during the drier months (June-August).

4. Communities usually control areas with an altitudinal range of approximately 1,000 meters. In general, the 3,200 - 3,600 m area can be used to produce maize, broad beans (Vicia faba), and quinua

(Chenopodium quinoa) ; the 3,600 - 3,900 m area can be used for potatoes and barley; and the 3,900 - 4,400 m area can be used for andean tubers, such as bitter potatoes, olluco (Ullucus tuberosus), and oca (Oxalis tuberosa), and for natural rangeland. Many communities in Central Peru do not have access to the lower maize growing (often irrigated) areas, while in southern Peru, most communities have access to all three levels.

5. Sheep production is the primary livestock activity. Cattle production is second to sheep, but oxen are a very important component of community and private production systems. Donkey and horse populations are also low, but again play a significant role in transporting agricultural products from the field to the house and sometime from the community to the market. They also are used in threshing grain. Sheep, cattle, and donkeys (and often pigs) are usually managed as one herd. Alpaca production occurs in some communities.

6. Labor availability is an obvious determinant of agropastoral production. The best evidence for this statements is the complicated labor exchange mechanisms that are used to make production/unit of labor input as efficient as possible. Labor is used as a medium of exchange, not only on a reciprocal basis, but also to "pay" for access to range and crop residue, or in exchange for tubers and grain.

CONCEPTUAL FRAMEWORK

If the project objective is to generate small ruminant technology that will produce community-level development, it is obvious that some project resources will have to be allocated to understanding how sheep productions systems function within the community system. There are many levels of organization between the sheep herd and the community. The conceptual framework adopted by the project must take into consideration these hierarchical levels or the identification of productions constraints will be difficult and the design of alternative technology with a high probability of adoption will be close to impossible.

Figure 1 is a set of hierarchical systems showing the relationship between sheep production and community-level processes. Sheep herds interact strongly with cattle and donkey herds and it may be impossible to separate these species. Livestock is tied so strongly to crop production that the primary research unit should probably be the Agropastoral Production System (the bottom system in the hierarchy). While both communal livestock and communal crop production occurs in some communities, the majority of both livestock and crop production is managed by individual families. Thus agropastoral system are usually subsystems of farm systems or "family" systems (the next level up in the hierarchy). Farm systems are subsystems of the community.

Communities are, of course, much more than the sum of the individual farm systems that form the community. In addition to complicated inter-family relationships, there are also communal processes that involve the allocation of land to families, communal buying and selling, and often communal herds and communal crop production. Communities function within larger regional systems with intercommunity exchange (livestock are moved to other communities in exchange for labor or agricultural products) and regional credit and market processes. The ultimate objective of the project is to have an impact on the region and for this reason, the regional system is included as the highest system of the set of hierarchical system shown in Figure 1.

RESEARCH STRATEGY

The objective of the project is to generate alternative sheep production system technology by synthesizing existing component technology (e.g., animal health, range management, herd management, etc.), which can be evaluated on basis of how the alternative technology affects family and community-level "well-being," and that consequently has a high potential of being adopted. The general research process followed by most area-specific or farm system-specific adaptive research projects (currently called "farming systems projects" by international donor agencies and the institutions that covet their funds) usually includes the following steps:

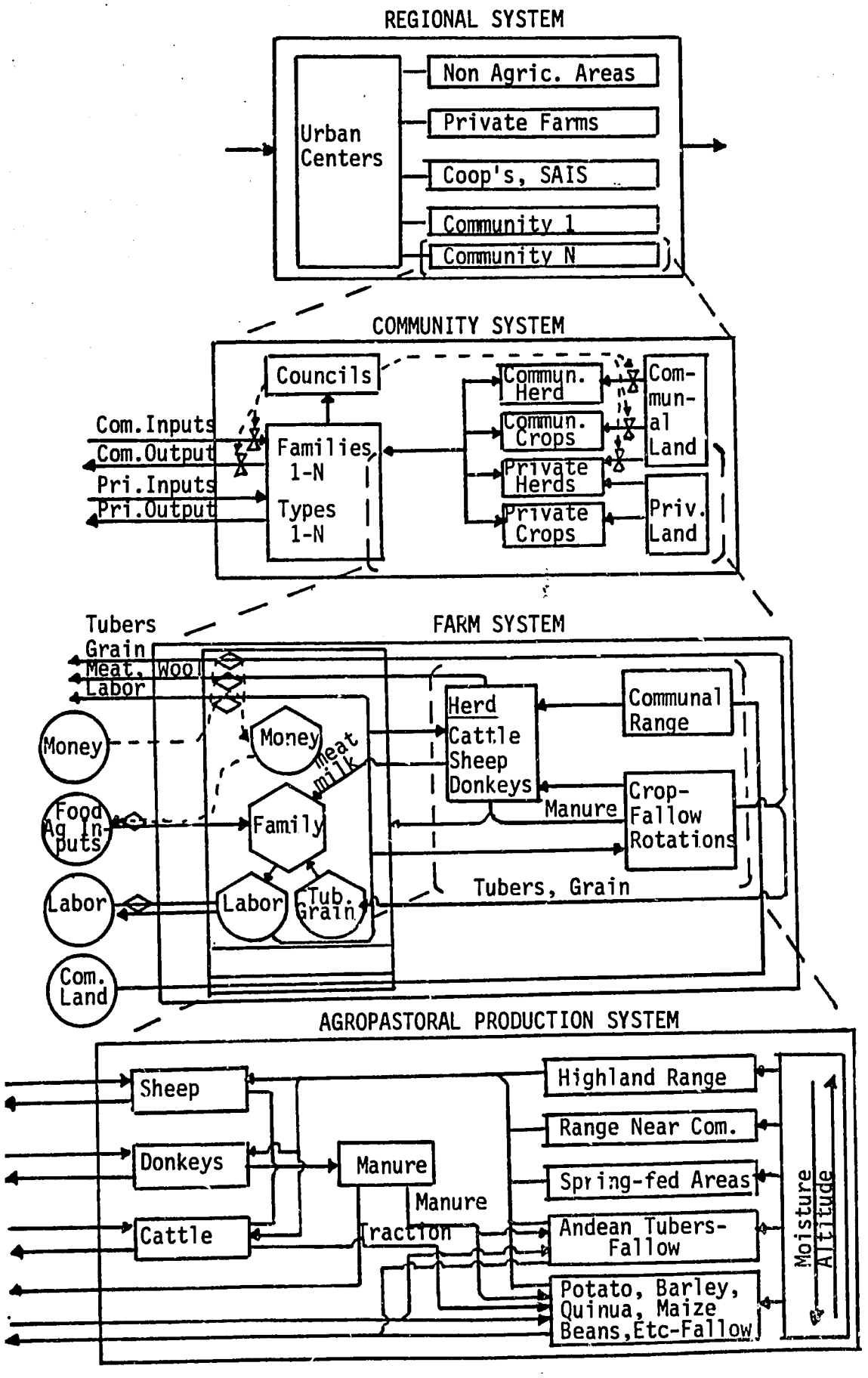

Figure 1. Conceptual Framework for an Agropastoral Research Project with Community Development Objectives

1. Characterization. This stage includes activities that produce a description of the present situation. It is often divided into a preliminary subjective initial reconnaissance and an objective statistically-designed survey of specific aspects that merit specific attention.

2. Analysis. This stage includes activities that produce an understanding of how systems function. This usually involves a more dynamic approach (with monthly, weekly, or even daily data collection) to the study of socioeconomic systems and biological experimentation.

3. Design. This stage requires the synthesis of the data produced during the analysis phase. Constraints and opportunities are identified and alternative technology is identified (hypothesized) that can resolve constraints and take advantage of opportunities.

4. Evaluation. This stage involves the systematic testing of hypotheses identified in the design stage. Alternative technology that does not produce the results demanded by farmer are disgarded or modified.

5. Transfer. This stage includes activities to insure that all farmers with farming system that are "similar" to those that were characterized and analyzed receive the alternative technology.

Figure 2 is an outline of a research strategy that was developed by applying the 5 steps described above to the conceptual framework presented in Figure 1. The strategy includes 12 activity sets. Activities 1 and 2 provide the information needed to design an analytical process (Activity 3). This process includes activities directed at the understanding of livestock, crop, and agropastoral production (Activity 4), the testing of a preliminary alternative Agropastoral system (Activity 5), dynamic studies of farm systems (Activity 6), community system analysis (Activity 7), and regional studies (Activity 8).

Figure 2. A general research strategy with parallel and sequential activities directed at a systems hierarchy with the objective of designing alternative agropastoral production systems that can lead to community development.

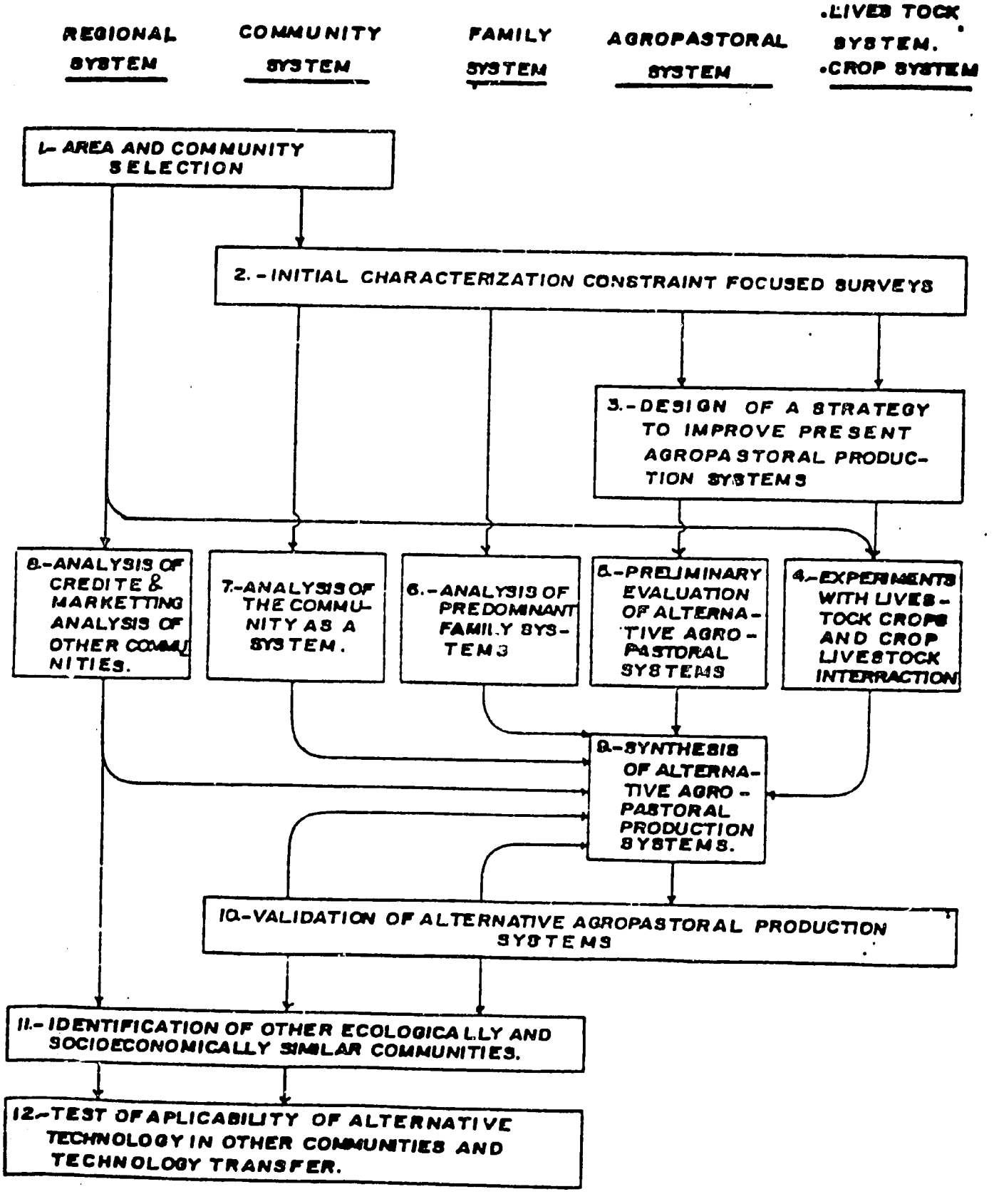

Activity-set 9 is the stage at which the analysis of the hierarchy of systems forming the conceptual framework is synthesized to produce alternative agropastoral systems that can be evaluated (Activity 10) by measuring impact on farm and community processes. If other communities that are ecologically and socioeconomically similar to the community where the research was conducted are identified (Activity 11), then the technology can be transferred to other communities in the region (Activity 12).

One of the key activities in the above process will be the characterization and analysis of the agropastoral system managed by individual families. One of the first steps that must be taken in the characterization process is the classification of farming systems found in the community. Criteria to be used in classification will probably include access to different altitudinal (more precisely, temperature regimes), labor availability herd size and total crop land. As a guideline to farm system characterization and analysis, a characterization of one farm system in the community of Cuyo Grande near Cusco, is summarized below.

A FARM SYSTEM IN CUYO GRANDE

A farmer (comunero) was interviewed in the community of Cuyo Grande, a community where the IDRC/IICA Andean Crops Project has been working for three years. Scientists with experience in this community translated questions from Spanish to Quechua and volunteered information from their own experience as well. No attempt was made to determine representivity of the farm system that was described by the farmer.

Figure 3 is a diagram of one farm system in Cuyo Grande. On the right are circles representing the environmental inputs that determine the cropping system options. Eight plots are located on the temperature gradient. A herd composed of sheep, cattle, and donkeys of different ages and sexes are grazed on communal range during the wet season, fed crop residue and grazed on fallow crop land during most of the dry

Figure 3. A Farming System in the Community of Cuyo Grande--Cuzco, Peru.

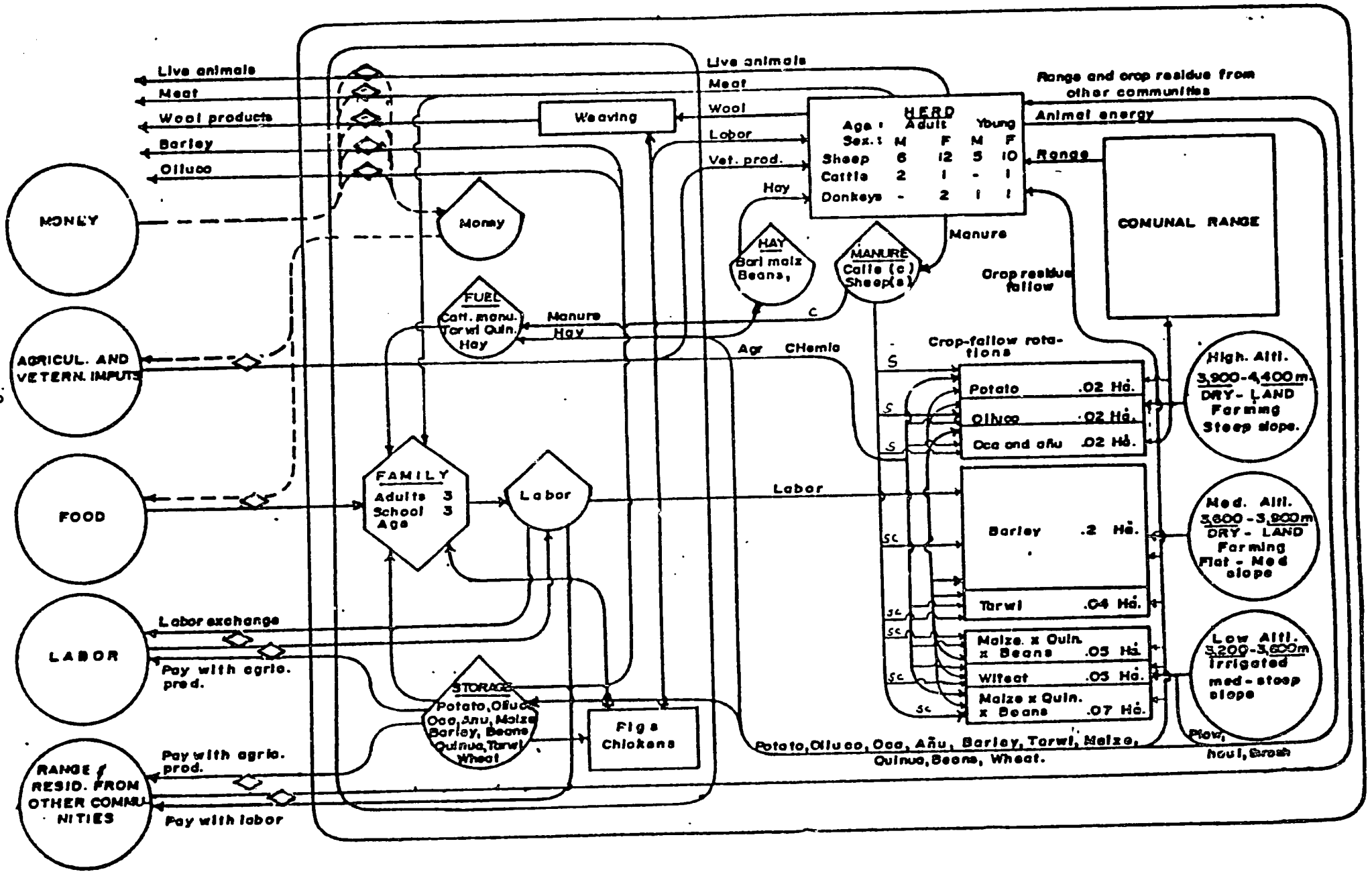

season, and grazed in a nearby community at the end of the dry season (feed resources are often not sufficient to meet the needs of the herd for the entire dry season).

The farmer that was interviewed sells live animals, meat, wool products produced from the wool from his sheep, barley (bought by the beer industry), and olluco (andean tuber). Money obtained through these sales is used to buy food not produced in the community (sugar, salt, rice, etc.) and limited quantities of agricultural and veterinary inputs. Labor and grazing rights to land in other communities is paid for with either labor or agricultural products.

Manure and crop residue are key components of the system. Cattle and sheep manure is collected. Sheep manure is used to fertilize the crops in the high altitude area, while both sheep and cattle manure are used in the mid and low altitude zones. Only cattle manure is used for fuel, and this is mixed with tarwi (legume) and quinua (grain crop) crop residue. Barley, maize, and bean crop residue are combined, stored, and fed to livestock. Oxen are used to plow the land before planting in the mid and low altitude zones. Donkeys are used to haul products and to thresh grain.