PN-AAN-867
9 2 100 ... /62
ISN-32 327

Simple Processing of Dehydrated Potatoes and Potato Starch

by
ROY SHAW
and
ROBERT BOOTH

International Potato Center
Apartado 5969
Lima—Peru

Foreword

This publication is for those who wish to construct and operate a simple plant to process dehydrated potatoes and potato starch. It discusses social and economic factors to be considered prior to construction of a processing plant. It also discusses important physiological components of the tuber and general arrangement and operation of the necessary equipment.

This publication leaves details of design and construction of equipment for local engineers and craftsmen familiar with local sources of supply and construction techniques. Hopefully, this publication provides sufficient information to enable a person to make the decision either to construct or not to construct a simple processing plant as well as provide necessary guidelines for the type of equipment and management required to operate a plant.

Much of the information here is based on the experiences of developing a pilot plant for processing dehydrated potato and potato starch at the International Potato Center's Highland Research Station, Huancayo, Peru. Although this plant was developed according to needs in the Peruvian highlands, the knowledge obtained is presented here in sufficient detail for use in any region of the world by persons interested in simple potato processing.

Additional information may be obtained from the International Potato Center (CIP), Apartado 5969, Lima, Peru, South America.

Acknowledgments

Most of the equipment shown in this publication was developed by Nilda Beltran and Miguel Bernal, then of CIP's staff. Many of CIP's staff contributed to the preparation of this publication which was edited by Frank Shideler of the Training & Communications Department. The research began as an IDRC, Canada, special-funded project and later became part of CIP's core program.

FRONT COVER. ***Papa seca,*** **is the finer-textured dehydrated potato product traditional in the South American Andes mountains, while the ribbon-like similar dehydrated potato product is made and used in Thailand, South East Asia.**

The International Potato Center (CIP) is an autonomous, non-profit scientific institution established through agreement with the Government of Peru to develop and disseminate knowledge for greater use of the potato as a basic food. International funding sources for technical assistance in agriculture finance the Center.

CONTENTS

Foreword 4
Acknowledgments 4
Introduction 7
Socio-economic Considerations 7
Potato Tubers 9
Composition 9
Storage Prior to Processing 12
The CIP Pilot Plant 12
Dehydrated Potatoes 14
Flow Diagram 14
Selection 14
Storage 15
Washing 15
Peeling 16
Cooking 18
Cutting 19
Drying 22
Milling 24
Sizing 25
Motors 25
Plant Operation 25
Starch 27
Flow Diagram 27
Introduction 27
Uses of Starch 27
Requirements 27
Water 27
Varieties 27
Storage 27
Peeling (Washing) 27
Pulping 27
Washing 29
Screening 29
Sedimentation 30
Drying 30
Milling and Screening 30
Pulp 31
Motors 31
Operation 31

Introduction

Normally, potatoes are stored fresh. But as storage time lengthens beyond a few months more expensive storage is needed and losses increase. At some point it becomes economically feasible to process stored fresh potatoes. Consider processing as an *extension* of storage and not as an *alternative*. Processing may also be considered as a means of improving the value of otherwise low quality tubers.

The most common forms of processing are dehydration, canning, freezing and pickling with vinegar or salt brine. Dehydration, which reduces water content of potatoes from 80% to 10%, is ideal for products that must be shipped to distant markets as it may lower transportation costs by up to 70%.

Three factors generally encourage dehydration of foods:

1. Storage of dried food is a simple process.
2. Transportation of dried foods is easy and more economical.
3. A favorable climate (bright sunshine and low humidity) where the crops are grown.

One form of dehydration used solar energy which man has employed to preserve food for hundreds of years. Eskimos sun-dry fish, North American Indians used the sun to dry buffalo and deer meat, Andean highland residents of South America continue the age-old process of drying potatoes in the sun.

In the Andes mountains and in other parts of the world with similar conditions of sunshine and humidity, potatoes have been solar dehydrated, primarily as an extension of storage. In many places, people have worked out a simple, effective system, based on their needs and resources. The result is that dehydrated potatoes have become a traditional food. Two historical examples are the *chuño* of Bolivia and southern Peru and the *papa seca* of central and northern Peru and southern Ecuador.

As actually happened in Peru, when people who traditionally consume *chuño* and *papa seca* move to large cities or live where they are unable to produce their conventional foods, their wants create a new market. Those remaining in the agricultural area must process additional amounts for transport and sale to meet this demand. This additional level of processing requires more or larger equipment for peeling, cooking, and cutting than is available in the traditional home. One important aspect for success in such a new venture is that the processed end product must be similar in appearance and useage to the traditional product.

Larger potato farms and cooperatives may also be interested in potato dehydration. Potatoes too small or too damaged for fresh sale can often be trimmed and selected for making a dehydrated product. As a result, potatoes formerly used for animal feed are available for human consumption. A replacement feed must be made available for the animals.

Before building a processing facility, one must consider socio-economic factors. These factors are as important as the technical considerations because the facility must fulfill a social need of making a traditional food available. Also, it must be acceptable to the culture and within its technical understanding. And it must efficiently conserve the limited economic resources of the people. A demand-market must exist for the product.

Socio-Economic Considerations

This publication is concerned mainly with technical aspects of simple processing of potatoes. However, before embarking on the design of appropriate processing facilities, a number of questions must be answered. This requires socio-economic as well as technical analysis:

1. **Whether or not** to process potatoes?
2. **Why** process?
3. **What** should be produced?
4. **How much** should be processed?
5. **How** should the process be done (the technical questions)?
6. **Who** should process the potatoes?
7. **Where** should the processing facilities be established?
8. How should the **financial and marketing** functions be handled?

Whether or not to process? becomes apparent only after the other questions have been answered and it appears clear that a processing project is technically, economically, and socially viable. Where possible, consider various processing alternatives and prepare tentative budgets for each. If several alternatives are technically and economically feasible, check social factors to insure the facility will continue to operate with local initiative. It must be a profitable private enterprise for local initiative to carry on with the project.

Why process? Potato processing projects may start for several reasons. For example, a private business may decide to install a processing facility to increase its own income. Or, a farmer may process potatoes for the same reason, or to convert perishable fresh potatoes into a more stable form to insure home consumption. Or, a government may promote processing to reduce price instability, increase total demand for potatoes and promote rural development through agro-industrialization. Finally, a cooperative group may decide to process potatoes to

increase member income and diversify its economic activities.

These are not all valid reasons for starting a processing project. Usually, potato processing will not noticeably reduce the instability of prices. This is because instability is generated mainly by unforeseeable weather conditions which influence production. In fact, instability of potato supply and prices is a major problem facing potato processors. This causes many facilities to operate below capacity with serious economic losses. The best projects involve local participation in conception, feasibility studies, implementation and operation.

The questions, **What to produce?** and **How much?** must be answered together on the basis of a market study. A sophisticated or complex study is not necessary, but it must be realistic. Technologies available and costs of inputs (including the price of potatoes as the raw material) must be considered. How much would it cost to produce a different processed item? At what price and at what volume could it be sold? For some processed products, such as starch and alcohol, the sales volume depends almost exclusively on comparative costs of making these products from potatoes or of similar products made from competing basic materials such as cassava, maize or sugar. In other cases—*papa seca* in Peru is an example—the demand depends more on local customs than price.

How to process? is answered by comparing the cost and benefit of alternative methods. For any given processed item the lowest cost technology must be used, and this depends on cost of local inputs. Where labor is most costly, labor-saving methods may be used. Where capital and machinery are expensive, labor-intensive methods are more appropriate. Once the lowest cost methods are determined for each processing activity and for each commodity to be produced, use these figures in comparing costs and benefits of alternative products for the market study previously mentioned.

Who will process the potatoes? has four possible answers: farmers, independent merchants, public enterprises or cooperatives. Whoever processes must understand the importance of the three major components of the complete system:

1. Supply (importance of price and quality of fresh potatoes).
2. Processing (importance of an efficiently-operated plant of proper size and design).
3. Demand (importance of knowledge about and access to market).

In many developing areas farmers process potatoes on a small scale using traditional methods. In this case it may be possible to improve on-farm processing by introducing simple and small-scale techniques. Persons associated with these enterprises usually lack knowledge of and access to the market. Improved market information will help determine the need for technical innovations.

Independent merchants have been responsible for growth of processing in developed countries. They can also be effective in developing countries as they usuallly have experience in arranging for the needed capital and can gain access to the market. However, they usually have little knowledge of price and quality of fresh potatoes.

Public enterprise processing in developing countries has not been very successful. Usually, knowledge of all three areas of concern—supply, processing and demand—are lacking.

Cooperatives combine technical and financial advantages of operating on a reasonable scale with the social advantages of local control and distribution of benefits. However, processing plant management is seldom efficient and knowledge of the market is commonly lacking.

Thus, just who should process, depends upon present knowledge and the ability of personnel to acquire and use additional knowledge.

The question **Who should process potatoes?** is associated with the next, **Where to process?** If the final product is perishable or easily damaged in transport (chips, for example), the processing plant may need to be near the final market. In other cases, transport costs can be minimized and overall profitability of the project maximized by locating processing facilities in or near major production areas.

Financial and marketing functions must be efficient if the final project is to be viable. Many processing projects fail because of inadequate attention to financing and marketing funding. Two types of financing are needed: (1) long-term financing for the initial investment in the plant and facilities, and (2) short-term financing for daily operations. Many projects in providing for long-term financing underestimate needs for operational capital and thus jeopardize the whole operation. In many cases, processing activities are concentrated during a few months each year, while the finished products are sold throughout the year. As a result, the processors must either have sufficient capital (work credits) to pay off the suppliers when fresh potatoes are delivered to the plant or the suppliers must accept a promissory note upon delivery and await payment.

Where farmers process their own potatoes no financial transactions are involved until sale of the finished product. However, since these farmers still need cash to cover their living expenses they may need credit if they are to process their potatoes rather than sell them at harvest.

Marketing is an area where public and cooperative processors often do not do as well as independent merchants. To insure market outlets it is of major importance that goods be competitive with those from competing sources. Quality standards must be maintained. Close attention must be given to financial arrangements. Where private competitors finance marketing functions, cooperative and public processors must do the same or be able to sell their products at reduced prices.

Now, the first question, **Whether or not to process?** can be answered. If the project shows defects in either technical, economical or social factors it should be postponed until these defects are corrected. If the project is apparently sound on technical, economic and social grounds, then it should proceed as rapidly as feasible.

4

POTATO TUBERS
Composition

Producing a satisfactory processed potato product requires knowledge about components of the raw material —the potato tuber. The tuber that we are to process is composed of many substances, some of major and some of minor importance for processing. These factors are discussed here as they apply to simple dehydrating. More detailed information is available in standard textbooks on the subject.

Dry Matter

This is the material that remains after removal of all water from the potato. It is important as it affects yield of the processed product and the economics of processing. Included in dry matter are the following components:

Important to quality of processed products

- Carbohydrates (starch, sugars, cellulose, pectins).
- Nitrogen compounds (proteins, amino acids, enzymes).
- Glycoalkaloids.
- Discoloring compounds (after-cooking darkening and non-enzymatic browning).

Of lesser importance to processing quality

- Vitamins, minerals, organic acids and lipids.

Dry matter of potatoes varies considerably among varieties and is influenced by place of production and fertilizing practices.

Varieties grown in the Mantaro Valley of Peru, for example, normally vary between 20% to 30% dry matter, with the bitter potatoes having higher dry matter. Potatoes grown in warmer areas, such as La Molina or San Ramon in Peru, have dry matter content as low as 15%. Table 1 compares the dry matter of varieties grown in La Molina and Huancayo, Peru.

Dry matter is accurately determined by drying a representative sample in a hot air dryer at 100°C until constant weight is attained. However, the specific gravity method for estimating dry matter content is recommended when a large number of samples are to be checked. This method is only a correlation and while not precise, it does indicate the highest dry matter content among various lots of potatoes. This is important to the yield of product.

The method involves weighing a sample of potatoes in air and then in water. From these figures the specific gravity may be calculated as follows:

$$\frac{\text{weight in air}}{\text{weight in air} - \text{weight in water}} = \text{specific gravity}$$

Table 1. Comparison of production location on dry matter content of potatoes.

Variety	La Molina, Peru (280 meters above sea level)	Huancayo, Peru (3,300 meters above sea level)
	Dry Matter %	
Renovacion	19.7	23.5
Renacimiento	26.7	25.8
Ticahuasi	17.7	24.1
Mariva	22.6	27.0
Merpata	18.3	26.4
Yungay	24.5	23.1

Figure 1 illustrates a typical arrangement for weighing in air and in water. Table 2 illustrates, for U.S. varieties, the correlation between specific gravity, dry matter, and starch content. The correlation will be slightly different for varieties grown in other countries. High dry matter correlates well with "floury" texture and is desirable in some products.

Figure 1. Typical equipment for determining specific gravity of potatoes by weighing them in air and in water.

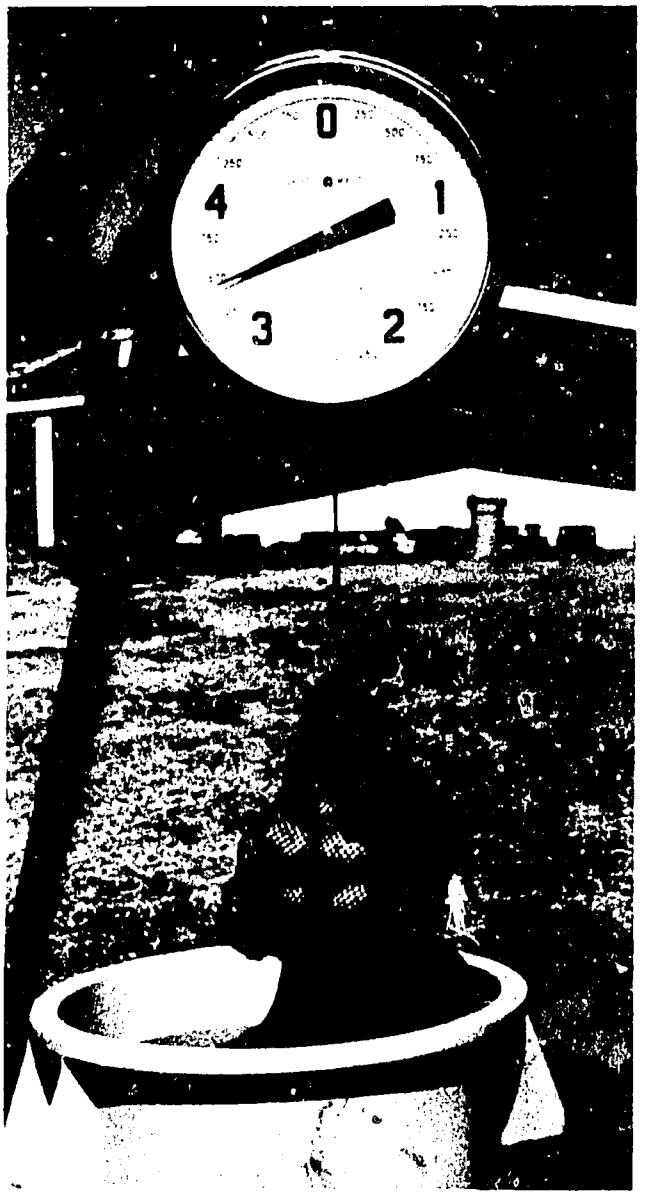

5

Carbohydrates

The carbohydrate content of potato dry matter consists of:

- starch,
- sugars,
- cellulose (cell walls),
- pectins (cell binding materials).

All of these compounds are polymers, derived from the simple sugar, glucose.

Starch makes up about 90% of the carbohydrates and about 70% of dry matter in potatoes. It is a mixture of amylose and amylopectin in the ratio of about 1:5. Amylose is a straight chain. Amylopectin is also a polymer of alpha-glucose but has slide branches every 20 to 25 glucose units. Starch also contains a small amount (0.093%) of phosphorous.

Table 2. Conversion table for specific gravity, dry matter and starch in potatoes.

Specific gravity	Dry matter (%)	Starch (%)
1.060	17.4	11.41
1.062	17.8	11.78
1.064	18.1	12.07
1.066	18.5	12.45
1.068	18.9	12.83
1.070	19.2	13.11
1.072	19.6	13.49
1.074	20.0	13.87
1.076	20.4	14.25
1.078	20.8	14.63
1.080	21.2	15.00
1.082	21.5	15.29
1.084	21.8	15.57
1.086	22.2	15.95
1.088	22.6	16.33
1.090	23.0	16.71
1.092	23.3	17.00
1.094	23.7	17.30
1.096	24.1	17.75
1.098	24.5	18.13
1.100	24.9	18.51
1.102	25.2	18.89
1.104	25.6	19.18
1.106	26.0	19.55
1.108	26.3	19.84
1.110	26.7	20.20
1.112	27.1	20.60
1.114	27.5	20.98
1.116	27.9	21.35
1.118	28.2	21.64
1.120	28.6	22.01
1.122	28.9	22.30
1.124	29.3	22.68
1.126	29.7	23.06
1.128	30.1	23.43
1.130	30.4	23.72
1.132	30.8	24.10
1.134	31.2	24.48
1.136	31.6	24.86
1.138	32.0	25.24
1.140	32.2	25.43

From G. V. C. Houghland (1966). New conversion table for specific gravity, dry matter, and starch in potatoes. American Potato Journal, 43:138.

Table 3. Amino acids in a Peruvian potato variety

Amino acid	gm/16 gm N.	Amino acid	gm/16 gm N.
asparagine	17.5	methionine	1.2
threonine	3.7	iso-leucine	4.1
serine	3.8	leucine	6.3
glutamine	15.4	tyrosine	3.9
proline	3.8	phenylalanine	4.0
glycine	3.5	lysine	5.3
alanine	4.0	histidine	2.6
cystine	1.1	arginine	5.0
valine	5.2		

Sugars are principally sucrose, glucose and fructose with small amounts of other sugars. Sucrose is a "non-reducing" sugar and does not affect processing quality. Of more importance are levels of the reducing sugars, glucose and fructose. During processing, these can react with amino acids to give a brown color and a bitter flavor. The amount of color and flavor developed depends upon the amount of these sugars and the temperature and time of drying or frying in the case of fried products such as chips and French fries.

The levels of sugars depend upon the variety and storage temperatures. Usually storage conditions result in adequately low sugar level. If potatoes have been in a refrigerated store, the level of reducing-sugars will be too high. These high levels can be reduced by storage at 15°C to 20°C for 2 to 4 weeks.

The brown-colored compound of sugars and amino acids is rapidly formed at temperatures above 55°C. If a solar dryer is constructed with open sides, seldom will temperature within the dryer exceed 50°C.

Cellulose (cell walls), comprises about 2% of dry matter and is a polymer of beta-glucose. On nutritional terms it is the crude fiber that aids in the human digestion of cooked potato. Cell walls also have some influence on the texture of potato.

Pectins (cell binding material) also make up about 2% of dry matter. Pectin, largely responsible for potato texture, is a polymer of galacturonic acid (derived from glucose). Galacturonic acids form esters that react with divalent minerals such as calcium to form a bridge with other pectin molecules. This results in a firm texture. If cooking water contains too much calcium it may be difficult to cook potatoes until they are tender. For this and other reasons the suggestion is made that potatoes be steam cooked.

Nitrogen compounds form from 1% to 2% of dry matter and consist of about an equal ratio of true protein and free amino acids.

True protein of potatoes includes the proteinaceous enzymes that can cause off color and off flavors, unless they are completely inactivated by cooking prior to dehydration.

Nutritionally, potato protein is almost equal to casein, which is the protein of milk. The potato is slightly low in levels of methionine and other sulfur-containing amino acids but it is high in lysine, the amino acid that is low in

6

cereals. Thus, potatoes can be supplemented with the sulfur-containing protein of eggs, or potato protein can supplement the lysine-deficient cereals. Typical amino acid content of a Peruvian potato variety is in Table 3.

The principal *free amino acids* are asparagine and glutamine. Only about 10% of the free amino acids are nutritionally essential.

Glycoalkaloids are derived from the alkaloid solanidine. The principal glycoalkaloids in potatoes are solanine and chaconine at levels of 5 to 13 milligrams per 100 grams of fresh weight. At levels above 20 milligrams per 100 grams of fresh weight, the glycoalkaloids may cause illness. However, because they are extremely bitter to the taste, potatoes with such large amounts of the compound are not usually consumed. Glycoalkaloid content must be reduced before bitter potatoes are suitable for human consumption. Potatoes exposed to light turn green as a result of chlorophyll production and at the same time small additional amounts (3 to 6 milligrams per 100 grams fresh weight) of glycoalkaloids are produced. Glycoalkaloids are concentrated near the tuber surface. Most are removed along with the green chlorophyll, when present, in peeling. Additional quantities are destroyed by cooking.

Discoloration compounds. Discoloration of dehydrated potatoes occurs in three ways:

(1) *Enzymatic* which takes place before potatoes are cooked.
(2) *After-cooking darkening* which occurs after cooking or during dehydration.
(3) *Browning* during dehydration and storage.

All of these discoloration problems result in loss of quality.

Enzymatic darkening is caused by oxidation of potato phenols. This oxidation causes a brown-to-blue-black discoloration. Proper and immediate cooking destroys this enzyme and prevents discoloration. If immediate cooking is not possible some protection may be obtained by immersing the potatoes in water, which excludes the oxygen needed for the reaction. Salt (3%) may be added to the water to help slow down the reaction further. Where peeled tubers are held regularly for prolonged periods prior to cooking, additional protection from this type of enzymic discoloration can also be obtained by one of the following treatments:

5-minute dip in 0.1% to 0.2% sodium bisulfite or
10-minute dip in 0.5% sodium meta-bisulfite.

After-cooking darkening is caused by reaction of ferric iron with orthodihydroxy-phenols (chlorogenic acid) that gives a gray discoloration. Normally potatoes contain iron in the ferrous and not in the ferric form. Cooking, however, changes some ferrous to ferric iron and exposure of hot potatoes to air increases this conversion. It is thus considered advisable to cool cooked potatoes in a water spray whenever possible.

The amount of after-cooking darkening depends largely on variety. Different varieties contain different levels of iron and chlorogenic acid. In cases where this type of discoloration causes loss of quality in the final product it may be controlled by either:

(1) Dipping in 0.4% citric acid, (lowers the Ph and prevents conversion of ferrous to ferric iron), or
(2) EDTA to bind the iron so it is not reactive, or
(3) Dip in sodium acid pyro-phosphate (SAPP).

Browning during dehydration and subsequent storage is the result of reducing sugars combing with free amino acids. During dehydration this reaction takes place rapidly at temperatures above 55 °C. Thus, it is important not to exceed this temperature. Browning during storage of the dried product is much slower as the temperature of storage is usually 15 °C to 25 °C. At this temperature the moisture of the dried product influences rate of browning. For safe storage dehydrated potatoes should have a moisture content below 12%.

Vitamins. Potatoes are an important source of vitamins for human nutrition. The more important ones are listed in Table 4. Processing should attempt to retain the vitamins and the process presented in this manual does this to the extent feasible.

Minerals. Potatoes are an excellent source of "trace" minerals which are important but only needed in small quantities. The important ones are listed in Table 4. Other than iron, they have little effect on processing.

Organic acid. Of many organic acids in potatoes, the principal ones are citric, oxalic and malic. They have little effect on processing.

Lipids. Potatoes contain lipids forming 0.5% to 0.9% of dry matter. The principal lipids are linoleic, linolenic and palmitic. Lipids may develop rancid odor and flavor. Under most conditions this does not cause a problem in dehydrated potato pieces but may be a problem in dehydrated mashed potatoes. Commercial antioxidants to prevent this reaction are available and can be used in the production of dehydrated mashed potatoes.

Table 4. Composition ranges and U.S. Recommended Daily Amounts for adults (USRDA) of freshly harvested potatoes.

	Per 150 grams raw potatoes	Percent USRDA
Ash, g	1.18 - 1.68	-
Crude fiber	0.549 - 0.938	-
Protein, g	2.523 - 3.617	3.88 - 5.56
Ascorbic acid, mg	33.95 - 54.15	56.58 - 90.25
Thiamin, mg	0.090 - 0.149	6.00 - 9.93
Riboflavin, mg	0.047 - 0.117	2.76 - 6.88
Niacin, mg	1.77 - 3.20	8.85 - 16.00
Folic acid, mcg	13.65 - 32.51	3.41 - 8.13
Vitamin B_6, mg	0.185 - 0.362	9.25 - 18.10
Sodium, g	0.003 - 0.025	-
Potassium, g	0.306 - 1.352	-
Calcium, g	0.0039 - 0.0252	0.39 - 2.52
Magnesium, g	0.026 - 0.365	6.50 - 9.13
Phosphorous, g	0.047 - 0.098	4.7 - 9.8
Iron, mg	0.414 - 2.106	2.3 - 11.70
Zinc, mg	0.470 - 0.696	3.13 - 4.64
Copper, mg	0.131 - 0.492	6.55 - 24.60
Iodine, mg	0.015 - 0.053	10.0 - 35.33
Manganese, mg	0.215 - 1.047	-
Molybdenum, mg	0.011 - 0.279	-
Selenium, mg	0.003 - 0.018	-
Aluminum, mg	0.452 - 1.370	-
Boron, mg	0.138 - 0.254	-

From: J. Augustin; J. DeMoura; M. Fereday; S. Jouhson; J.M. Hogan; R.H. True; R.L. Shaw, and P. Orr (1977). Nutrient Composition of the Irish Potato. Final Project Report to Potato Board, Denver, Colorado, USA.

Storage Prior To Processing

Because it is impossible to process all potatoes immediately after harvest, they must be stored. If the required storage period is longer than 2 to 3 months, depending on variety and specific storage conditions, the potatoes must be treated with a sprout inhibitor. This helps keep them in good processing condition for an additional 2 or 3 months. Three sprout inhibitors are commonly available: CIPC and TCNB for direct post-harvest application to tubers and MH for application to the growing crop.

CIPC (chloro-iso-propyl-carbamate) is the most dependable inhibitor. Apply as directed by manufacturer's label and only to those potatoes to be stored longer than 3 months. If applied as directed, this inhibitor does not cause residue problems.

TNCB (tetra-chloro-nitro-benzene) is somewhat less satisfactory than CIPC, particularly at higher uncontrolled storage temperatures, but has the added advantage of also being a fungicide.

MH (maleic hydrazine) must be carefully applied to the growing crop before potatoes are harvested. Potatoes must be in a certain state of growth and soil moisture must be adequate. Too early application will reduce yields while too late an application will have a reducing effect later on sprout control.

The CIP Pilot Plant

The International Potato Center (CIP) developed a simple, village-level pilot processing plant for production of dehydrated potatoes and starch during 1977 to 1980 at its Highland Research Station, Huancayo, Peru.

Huancayo is in the Mantaro Valley in the central Peruvian highlands at an altitude of 3,300 meters above sea level. In the potato growing areas on the slopes of the valley, farm families traditionally process some of their harvest into dehydrated potatoes. These are stored in the home for future consumption, especially as a main ingredient in the traditional festive dish called *Carapulcra*. As people from this and other highland areas migrated to large coastal cities they created a new demand for dehydrated potato, which could not be met from traditional supplies.

The CIP pilot plant was developed to demonstrate how this new market could be supplied by upgrading traditional labor intensive processing methods through use of simple equipment. To meet these requirements the developed plant had to be acceptable to the local culture and be within available resources. These are the reasons all the equipment used in the plant, except for the motors, was produced in local workshops according to local skills, capabilities and availability of materials. For these same reasons, detailed design of any plant or individual piece of equipment must be modified somewhat to conform to specific local needs and capabilities.

The CIP pilot plant has two processing lines:

1. For processing 1 metric ton of fresh tubers a day into approximately 200 kilograms of dehydrated potato.
2. For processing 2 metric tons of fresh tubers a day into approximately 200 kilograms of starch.

Technically the simple equipment and methods used produce a dehydrated potato and starch acceptable on local markets. The product is more uniform and frequently of better quality than the traditionally processed products.

The method for solar drying potatoes can also be used to dehydrate other local produce such as onions, garlic, pepper, carrots, cooked meats and herbs. Thus, the system is not restricted to only processing potatoes but can also be used for additional periods to extend the storage life of other crops frequently grown by the potato farmer.

The milling and sieving equipment is similar to that used to produce flour from cereals and can also be employed for that purpose.

Much of the equipment and the systems used can easily be adapted to other local needs, thus, extending its usefullness and improving its acceptability. The equipment described in the following pages was developed for specific needs for the CIP plant and should stimulate and encourage similar developments rather than serve as exact models for duplication.

Economically the CIP plant was operated profitably based on costs and prices from December 1979 to January 1980. Naturally, costs and prices will vary from time to time and place to place.

The size of the CIP pilot plant would only supply an estimated 0.5% of the demand for dehydrated potato on the Lima market. It is, therefore, doubtful that the plant will be a factor to upset traditional market and price patterns.

Capital costs of the plants (US$6,000 to US$10,000 for dehydrating potatoes and US$4,000 to US$5,000 for making starch) are considered reasonable for large farmers, cooperatives, or small companies.

Socially the simple methods and equipment are acceptable in Peru and have already stimulated interest in other potato producing countries of the world. This is evidenced by the number of plants based on the CIP research that are being developed in Peru and by the large number of inquiries received by CIP. Successful processing plants must fill a determined local need, must be technically applicable, and must be acceptable to the culture as well as be feasible within available resources and capabilities.

Throughout the development of the CIP pilot plant numerous design modifications took place to improve the technical efficiency of the plant. Although considering

8

that further modifications and improvements could be made, CIP in 1981 decided to maintain the plant in its current condition as a teaching and demonstration unit. To illustrate the type of equipment modifications that could be considered, we are including in the text of this publication *suggested modifications* made by participants attending two 1-week practical training courses held with the plant in June 1981 (Figure 2). These courses were attended by Peruvian university professors and students, extensionists, scientists, farmers interested in constructing their own plants and representatives of the Ministry of Agriculture. These suggestions along with the basic plant design should be considered in view of local needs and capabilities.

Figure 2. Participants in a training course evaluate simple processing equipment used in the CIP pilot plant.

9

DEHYDRATED POTATOES

Flow diagram of the process for dehydrating potatoes:

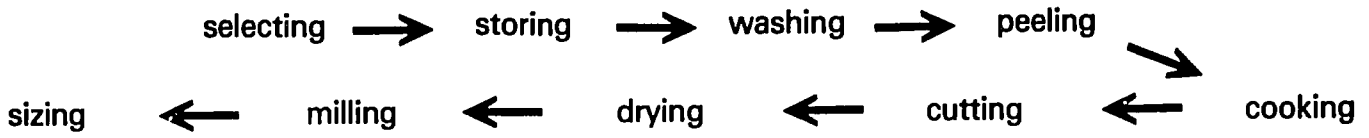

Equipment for each processing step is designed to handle the flow of potatoes from the preceeding equipment and to maintain a uniform flow throughout the plant.

The following is the description of the process for dehydrating potatoes, the necessary equipment and its operation as developed and operated in the CIP pilot plant.

Selection of Potatoes

Process only those varieties that will yield an acceptable product. Use yellow fleshed varieties if that color is desired or is acceptable in the end product, but do not use yellow flesh varieties if a light color product is needed to meet market demand. Some varieties with red or purple skin also have color in the flesh. The color may or may not be acceptable. This is why a thorough knowledge of the market and its demands is necessary before starting a processing plant.

The final decision on which lot of potatoes to process will be economic. The single greatest cost of producing dehydrated potatoes (or starch) is the cost of potatoes used. This is one reason that a knowledge of supply (quality and price of fresh potatoes) is important.

In all potato production zones, various grades (quality) are available at different prices. Lower qualities usually have substantially lower prices. However, lower quality potatoes also have more waste and additional labor for inspection and trimming are required (Table 5). It is possible that paying a higher price for better quality will result in better economic return, due to less waste, lower

Figure 3. Typical tubers used for processing in the CIP pilot plant. Potatoes for dehydrating are generaly of reasonable size but unsuited for fresh market because of poor shape and damage. Potatoes for starch are usually small and of poor quality.

10

labor costs and a better, more acceptable product. Typical tubers used for processing in the CIP plant are shown in Figure 3.

The yield of product (dehydrated potato or starch) per kilogram of fresh potato depends on dry matter content. Within varieties that produce an acceptable product select the varieties or lots with the higher dry matter. Keep in mind that it is the cost of the dry matter that is important and not the cost of the fresh potatoes *per se.*

Table 5. Kilograms of fresh potatoes required to produce one kilogram of dehydrated potatoes using "marketable" and "discarded" categories of three Peruvian varieties.

Variety	"Marketable" tubers	"Discarded" tubers
Mariva	4.4	4.9
Tomasa Condemayta	3.6	4.6
Promesa	4.1	5.0

Storage

Storage is normally at the farm and not at the processing plant. However, processing should not be planned until an adequate supply of potatoes is assured for the anticipated production. Unless the processing season coincides with the harvest season, enough potatoes must be placed in store at harvest to assure a supply sufficient for continuous and proper operation of the processing plant.

In the Andes mountains potatoes can be stored for 3 to 5 months in simple structures. The main requirements are adequate ventilation, insulation, and exclusion of light. Light causes the potatoes to turn green and this results in a poor flavor when the potato is dehydrated.

Reducing sugars will accumulate within the potatoes if they are stored at low temperatures. This may result in dehydrated potatoes with an objectionable brown color. Proper operation of the dryer to avoid high drying temperatures will minimize this problem and will produce properly dehydrated potatoes. Reducing sugars also accumulate in tubers that have been stored for prolonged periods at high temperatures.

Potatoes stored for more than 2 to 3 months at temperatures above 4 °C will sprout. Sprouting increases with high storage temperatures. Sprouting can be controlled by chemical inhibitors.

One ton of potatoes requir a storage area of 1 square meter when the potatoes are piled 1.5 meters high. The floor of the storage should be slatted to permit free entry of cold air from below. Provision should also be made for free exit of warm air out of the roof of the store. Ambient night temperatures as low as −2 °C will not normally damage well-stored potatoes, but may result in increased reducing sugar content. The roof of the store should provide shade to the walls, the outside surfaces of which should be painted white to reflect the heat from the sun.

Typical simple stores may be constructed for capacities from 1 to 35 tons (Figures 4 and 5).

Washing

Dirty potatoes should be washed to remove soil, insects, sprouts, and other foreign material. Inspection of clean potatoes is easier and makes detection of defects more thorough so that unacceptable tubers may be discarded. Potatoes with only small amounts of soil can have this removed during the peeling operation.

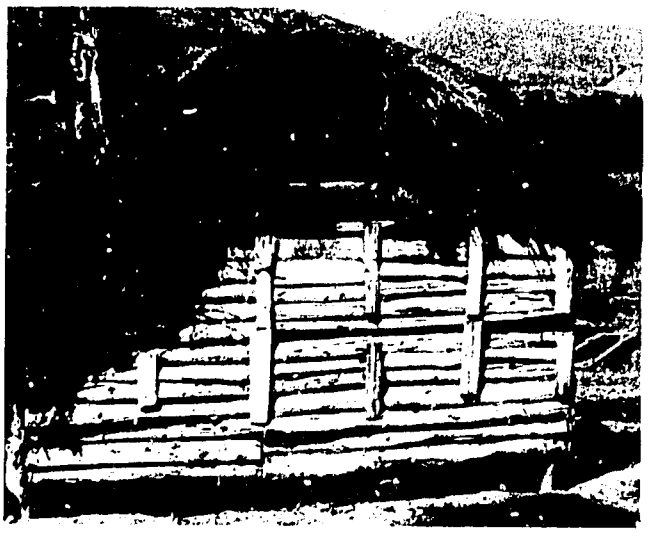

Figure 4. A 2½-metric-ton capacity rustic store made of timber.

Figure 5. A 35-metric-ton capacity store of adobe.

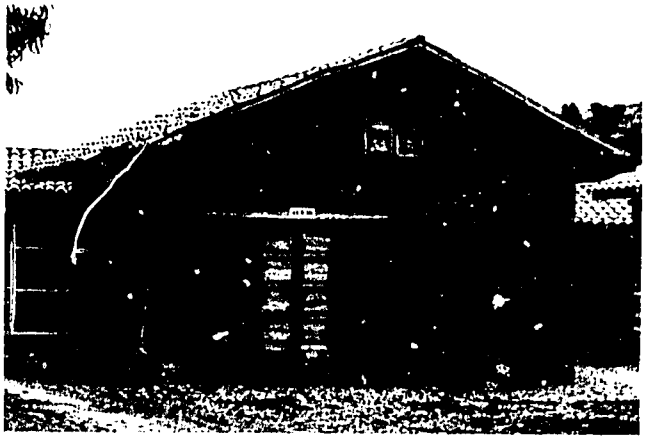

Following good harvest and storage conditions a separate washer is not normally required in simple processing. But because some lots—following a wet harvest, for example—may have a high soil content, a washer design is included here so it may be constructed if necessary.

A simple design for constructing a manually-operated potato washer, using 55-gallon oil drums, is shown in Figure 6. If condition of the tubers requires continuous useage of the washer, install a pulley for mechanical operation from the same shaft and motor that powers the peeler and the cutter. The oil drum is cut lengthwise at a point corresponding to one third of the diameter. Other similar material or containers could also be used and adapted to handle the same amount. Several wheel paddles equipped with brushes are fixed on an axle with wooden dowels. The axle has a handle to rotate the paddles and agitate the potatoes (Figure 7). When the potatoes are clean, the washer drum is turned on its side to empty potatoes into a container for transport to peelers.

The capacity of the described washer is 25 kilograms of potatoes. With 150 liters of water, the washer is agitated for a few minutes.

Peeling

Potatoes must be peeled to the extent desired by the consumers. In some cases unpeeled potatoes are acceptable. Usually, however, peeling is required.

Peeling may be done by hand or mechanically. Because of the irregular shapes of potatoes, mechanical peelers seldom are completely satisfactory and hand labor is slow and expensive. It is customary to first partially peel rapidly and cheaply with a mechancal peeler. Hand labor is then used for final peeling and trimming.

The mechanical peeler designed for this project is shown in Figures 8 and 9. This peeler is a sheet metal cylinder, mounted to rotate on a horizontal axle. The cylinder drum is punched from the outside so that many small points approximately 7 millimeters apart protrude into the inside of the drum. When the cylinder containing potatoes is rotated, the protruding points scrape the peel from the potatoes. Each end of the cylinder is closed with a small door so that potatoes may enter at one end to be peeled and leave from the other end when peeling is completed. Across the top of the cylinder a perforated metal

◄ **Figure 6. Washer to remove soil from potatoes.**

Figure 7. Diagram of washer to remove soil from potatoes prior to processing.

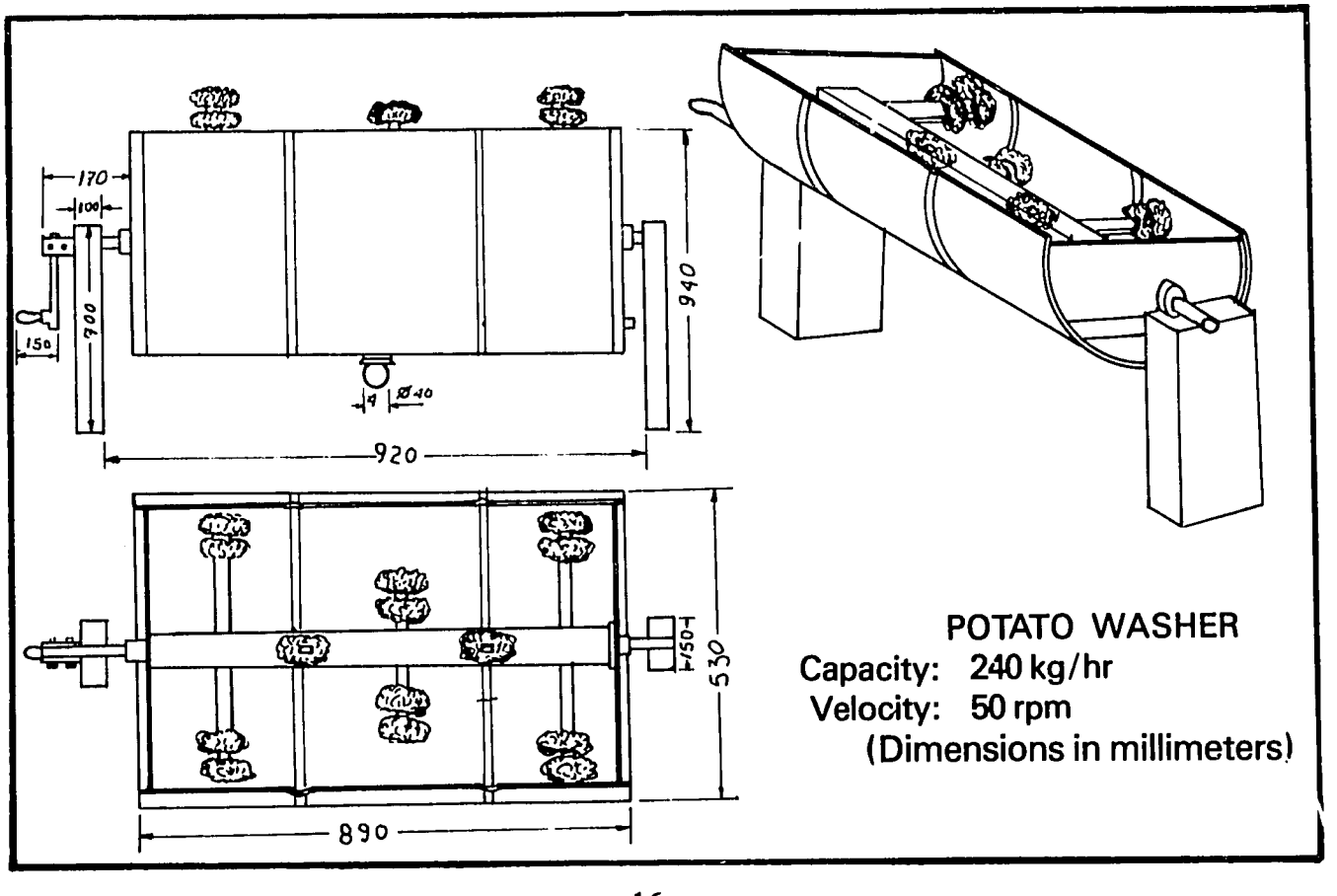

12

pipe provides a source for distributing water to the peeler and potatoes. In this case, the drum is rotated by a belt and driven at 50 to 70 revolutions per minute by a motor.

The capacity of the peeler is 20 kilograms of potatoes. After peeling by rotating the drum for about 4 minutes, the potatoes are discharged for final trimming and peeling. Smaller capacity peelers can be similarly constructed and operated either manually or by motor (Figure 10). These peelers will also remove peel from other vegetables and fruits.

Figure 8. A peeler made from a 55-gallon oil drum. Motor driven, it has the capacity to peel 20 kilograms of potatoes in 4 minutes.

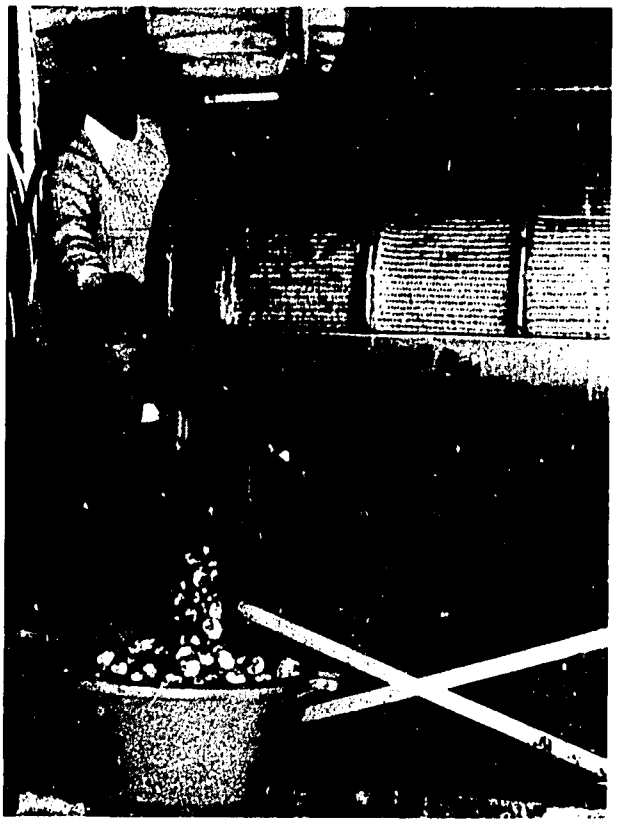

Figure 9. General drawing of peeler, belt-driven by motor.

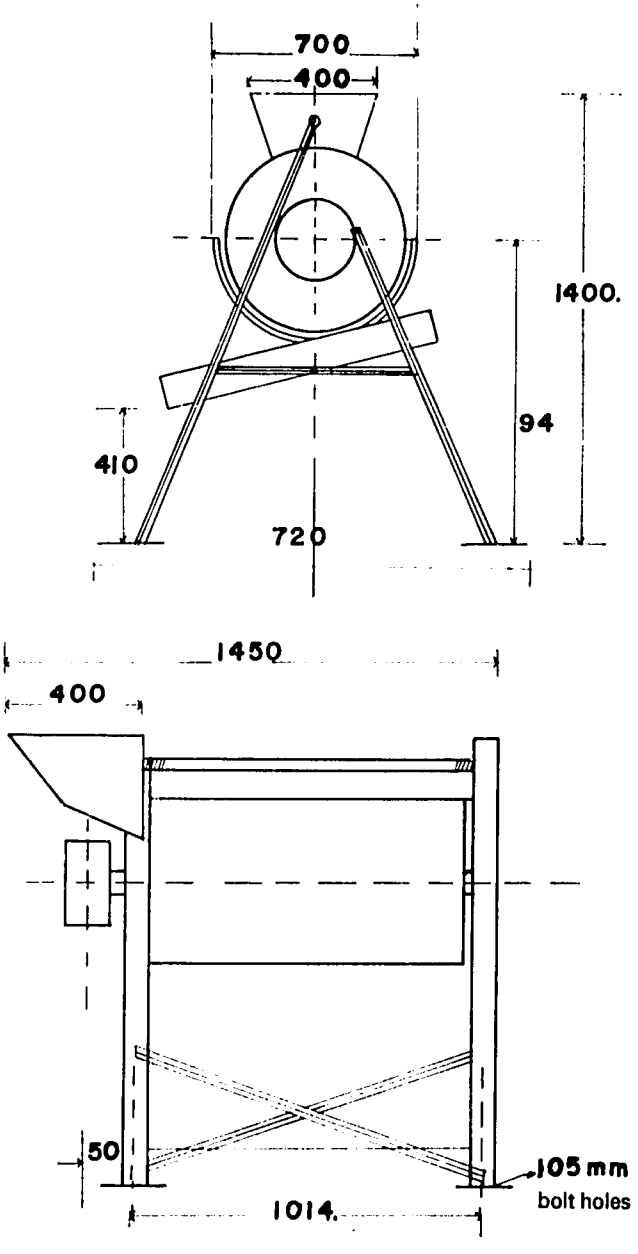

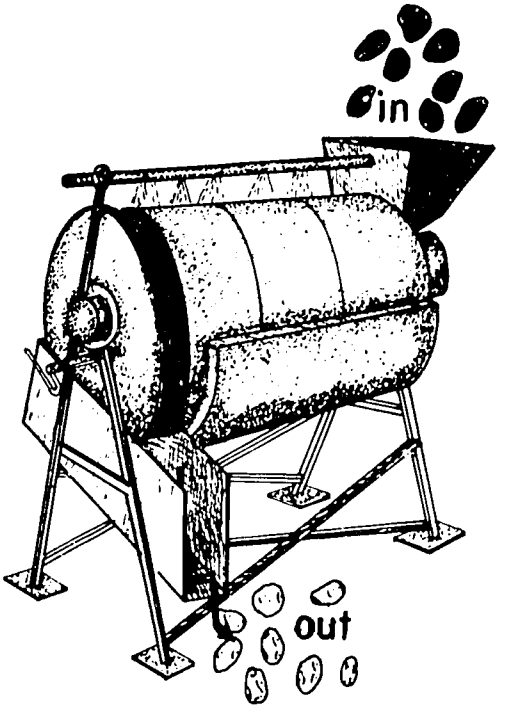

PEELER
Belt driven by motor.
Sketch showing general design.
(Dimensions in millimeters).

13

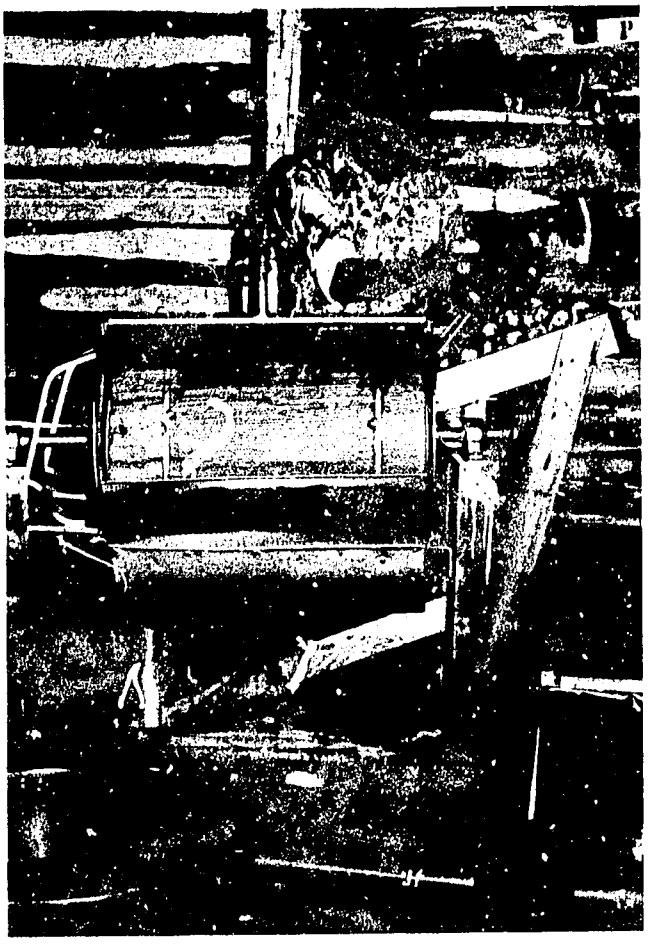

Figure 10. Small peeler operated by hand or motor. Capacity is 3 to 5 kilograms in 4 to 5 minutes.

Suggested modifications

- The points protruding into the drum are 4-5 mm long. It is suggested that 1 to 2 mm is adequate.
- The potatoes should be caught on discharge from the peeler in perforated baskets to permit drainage of water.

Cooking

Potatoes must be completely cooked before dehydration. Cooking preserves the natural color and flavor of the potatoes and protects nutrients from deterioration. Dehydrated potatoes made from uncooked potatoes will have a dark color and a poor flavor.

Potatoes can be cooked in water or in steam. Generally less nutrients are lost during steam cooking (Table 6). With water cooking, the water is brought to a boil over a fire. The peeled, uncut potatoes are then added to the boiling water. Keep them over the fire until the largest potatoes are cooked. Steam cooking is done in a metal chamber positioned over the fire (Figure 11). The chamber is designed to hold about 7 to 10 centimeters of water which is heated to provide steam. The steam cooks the potatoes which are in baskets positioned above the boiling water.

Cook potatoes thoroughly but not as much as would be required for making puree. Small potatoes (less than 5 centimeters in diamter) will cook faster than larger potatoes. For this reason, select potatoes by size and cook small potatoes in one lot and larger potatoes in another lot. Different varieties also require different cooking times. Simple cooking tests are advisable before processing a large quantity of potatoes. Cooking time will vary from 20 to 40 minutes.

Steam cooking whole potatoes helps to preserve vitamins, minerals, and soluble dry matter.

Several designs are possible for steam cookers. One has the boiling water in the bottom 7 to 10 centimeters of half of an oil drum (Figure 12). The potatoes are held in a perforated basket which is positioned just above the boiling water. A lid over the the oil drum prevents escape of the steam. Four of these drum units are needed for a plant processing 1 ton of potatoes per day.

Table 6. Percentage dryweight comparison of residual protein content of potatoes cooked in steam and in water.

	Protein content (N × 6.25)	
Variety	Water cooked	Steam cooked
Revolucion	8.9	9.0
Renacimiento	7.8	8.1
Cuzco	8.7	9.3
Promesa	10.7	10.7

In another type of steam cooker, the cooking chamber is square, with space for 4 baskets each with a capacity of 25 kilograms of potatoes (Figures 11, 12, and 13). The perforated baskets are supported by racks above the boiling water (Figures 13 and 14). When the baskets are placed in the chamber, the door is closed to conserve steam.

In operation, the water in the bottom of the chamber is brought to a boil. About 25 kilograms of potatoes are placed in one of the baskets and the door is closed, thus starting the cooking process. After about 10 minutes, a

Figure 11. Metal cooking chamber positioned over firebox.

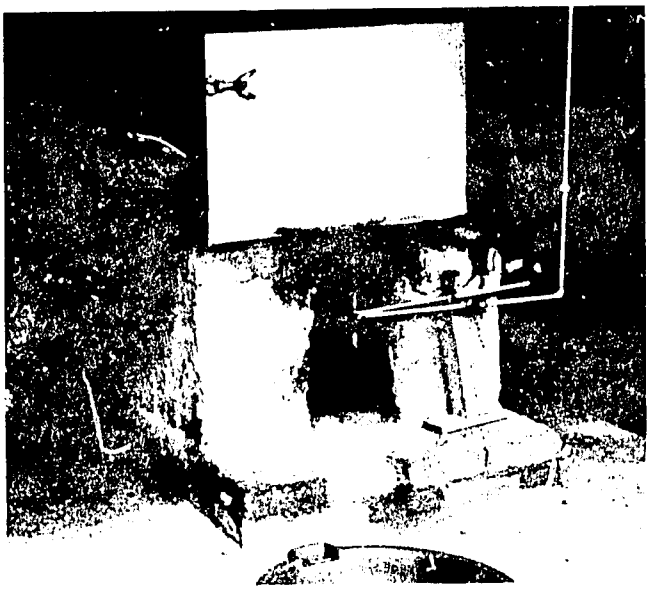

14

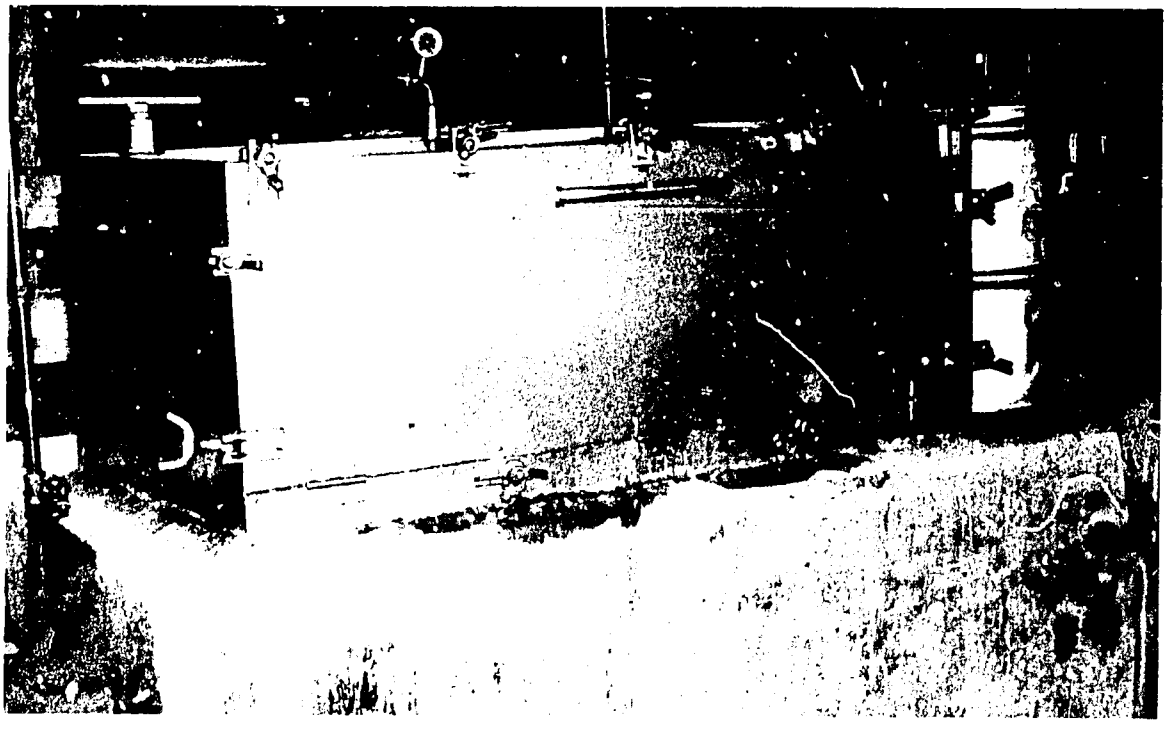

Figure 12. Two steam cooking chambers: one prepared from a 55-gallon oil drum (right) and a larger cooking chamber (left).

second basket with 25 kilograms of potatoes is placed in the chamber. At about 10-minute intervals baskets 3 and 4 are placed in the chamber. After 30 to 40 minutes, the potatoes in the first basket have been cooked and are replaced by a fresh 25 kilograms of uncooked potatoes. By this means a steady supply of cooked tubers is maintained (Figure 15).

The fire oven to boil the water can be constructed as desired. The most important factor is that it be adequate to cook 150 to 200 kilograms of potatoes each hour. The oven can be constructed of brick, adobe, cement, iron, or whatever is available or useable. Different fuels can be used. The CIP pilot plant used fuel oil. Wood, rice straw, kerosene are also acceptable.

Cutting

Cooked potatoes must be cut to expose as much surface as possible for dehydration and to be of acceptable size to satisfy consumer demand. In the Andes most dehydrated potatoes are consumed in the traditional dish *carapulcra* or in dehydrated soup preparations. The cooked tubers are thus cut to a size desired for these consumer needs. This is done by pressing the peeled and cooked potatoes against a rotating steel disc. The disc has protruding cutting edges made to slice the cooked tubers into shreds of about 2 millimeters in cross section.

Figure 13. Larger cooking chamber with four perforated cooking baskets placed above boiling water.

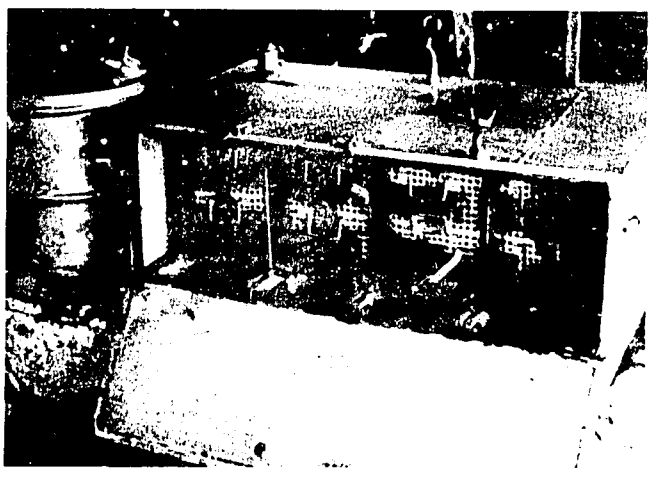

Suggested modifications

The chamber with four baskets is difficult to use. Four small independent chambers would be better. Also the baskets are too large. Three shelves with perforated trays, each tray holding 6 to 8 kilograms of potatoes, would be easier to manipulate.

In one design the rotating cutting disc is horizontal and operated manually (Figures 16 and 17). The potatoes are pressed against the disc by exerting manual force on the "butterfly" plate. The disc is rotated by hand, cutting the potatoes into the desired size.

A modification of this design put the disc in a vertical position. It was rotated by a belt-driven pulley. This cutter similarly has a manually operated plate to press the potatoes against the cutting disc (Figures 18, 19 and 20). Several discs can be made with different sized protruding cutting edges to slice potatoes into sizes desired by consumer end use.

Cutting is easier with cool potatoes than with hot potatoes. Potatoes are cooled while they remain in the cooking baskets for about 10 minutes with a fine water spray (Figure 21). They can be cooled in air in about 30 minutes but this may result in greater discoloration.

15

Figure 14. Potatoes in perforated cooking baskets are placed in the chamber above the boiling water.

Figure 15. Cooked potatoes being removed from cooking chamber.

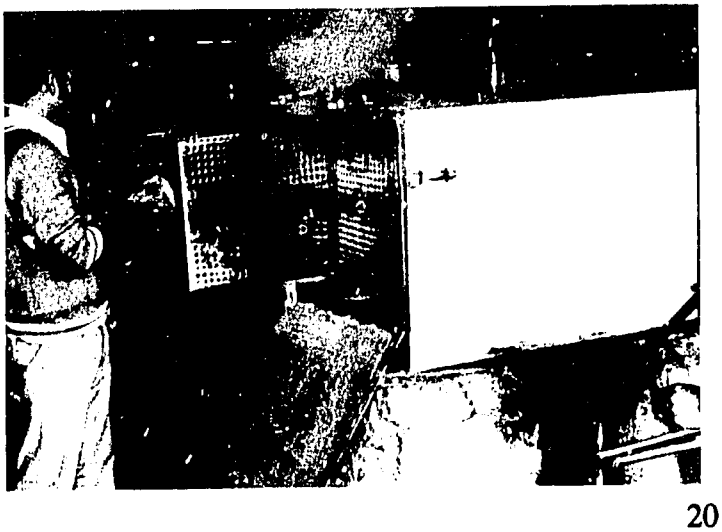

Suggested modifications

- The diameter of cutting disc should be increased to 40 to 50 centimeters rather than 29 centimeters as in the CIP model.
- The protruding cutting edges might be increased from 2 millimeters to 4 millimeters.
- Raw potatoes are much easier to cut than cooked potatoes. The raw cut shreds must, however, be washed three times in water to remove free starch. This results in loss of product, but results in easier operation. Cooking time of cut tubers is only slightly shorter than for whole tubers.

Figure 16. Hand operated cutter.

16

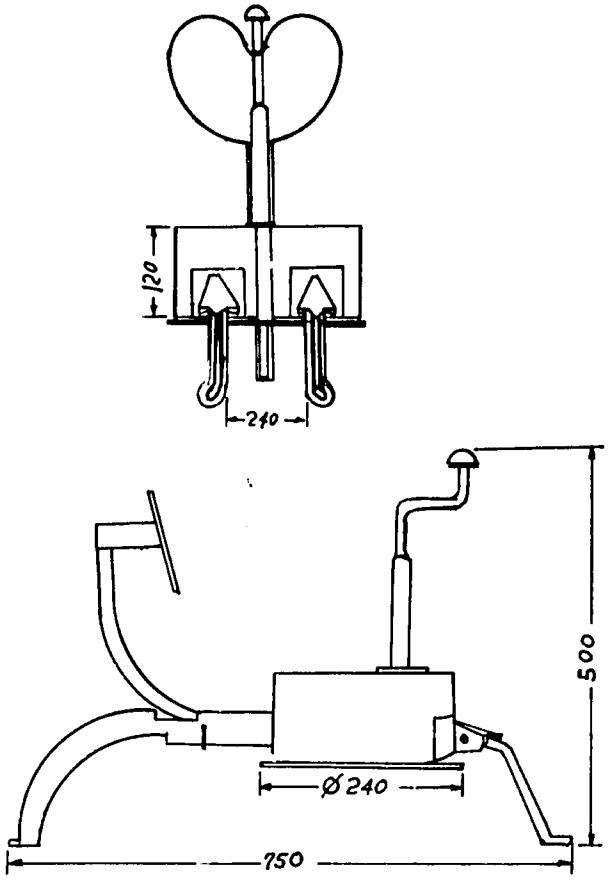

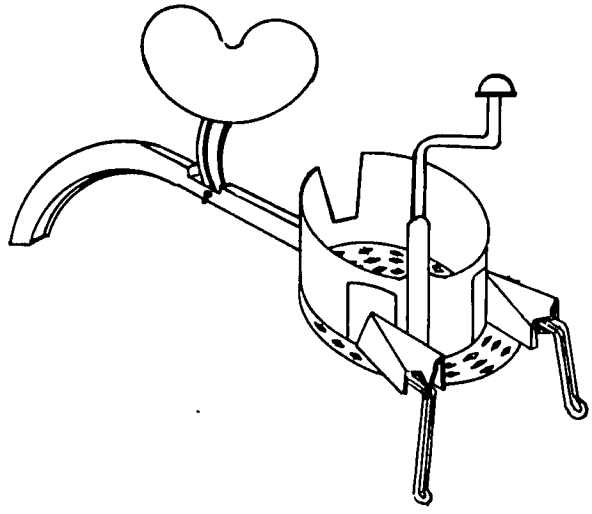

HAND OPERATED CUTTER
Capacity: 150 kg/hr
Velocity: 65 rpm
Dimensions in millimeters

Figure 17. Diagram of hand operated cutter.

Figure 18. Motor-driven cutter with pressure plate (a) in raised position. Cutting edges (b) of disc are visible. The belt (c) drives the cutter.

Figure 19. The motor driven cutter in operation. Shredded potatoes collected in the container are taken to the solar dryer to be spread on drying trays.

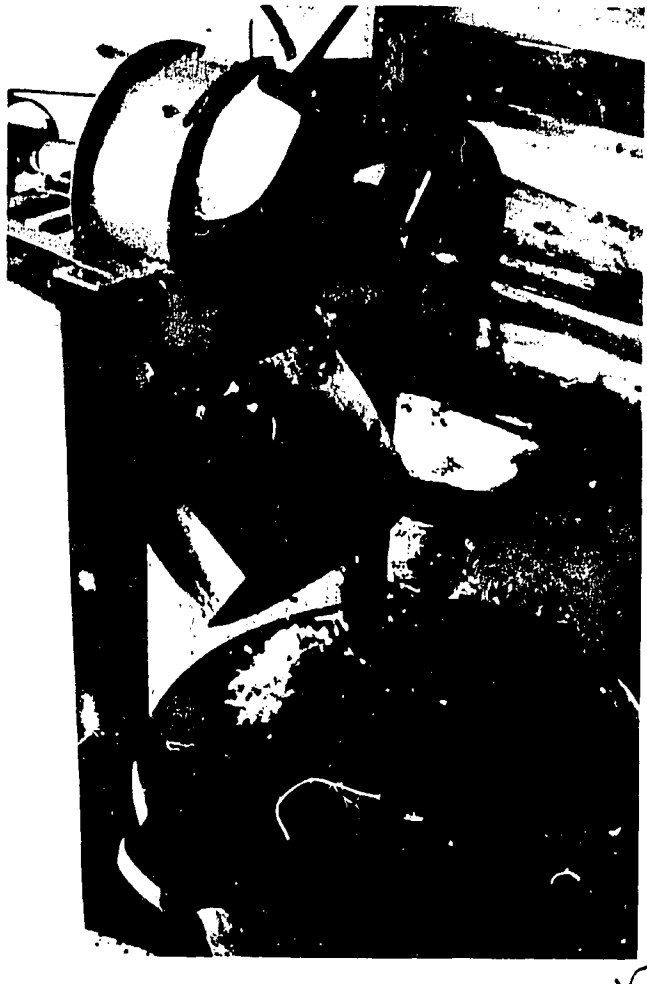

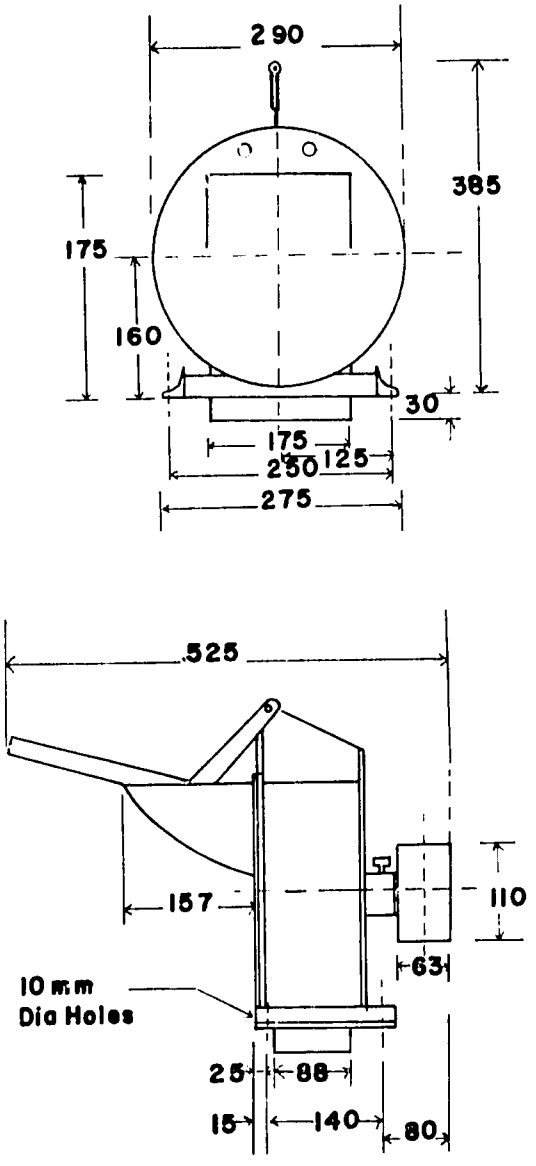

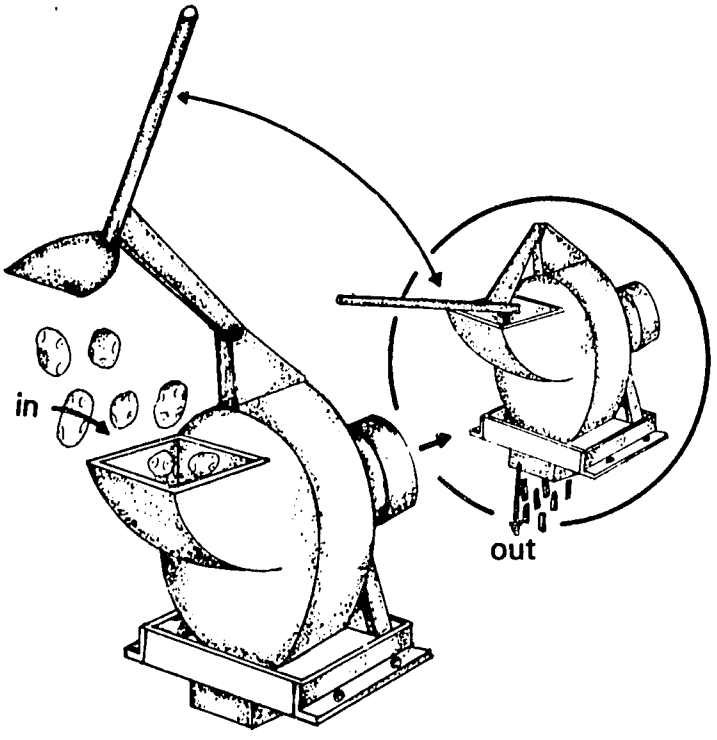

CUTTER FOR COOKED POTATOES
(Belt driven by motor)
Sketch showing general design.
Dimensions in millimeters.

Figure 20. General design of cutter for cooked potatoes.

Figure 21. A water spray is used to cool cooked potatoes prior to cutting.

Drying

The traditional system for drying is to expose hand-cut potatoes to the sun on a building roof or the ground. This system has minimum cost but also disadvantages:

- Considerable manual labor is needed in spreading and in collecting the potatoes after dehydration, especially in larger operations.
- The 1-centimeter pieces require several days exposure for complete drying.
- Exposure of the cut potatoes under these conditions permits considerable contamination by dust, birds and animals.

Potato dehydration follows an "equilibrium humidity" curve. When the humidity of the air is in equilibrium with the moisture in the potatoes, neither the air nor the potatoes will give up moisture to the other. When humidity of the air is below the equilibrium humidity for potatoes with a specific water content, potatoes will

Figure 22. Cooked, cut potatoes being dehydrated on drying trays held on two-tier racks at an angle of 30 degrees.

give up moisture to the air (that is, they will dry) until a new equilibrium is reached. Above a moisture content of about 30% the equilibrium humidity is between 90% to 95% relative humidity and drying will always occur at relative humidities below this.

Air of 80% relative humidity has enough drying capacity without added solar energy to remove more than 80% of the water from potatoes. This relationship between air relative humidity and moisture content of the potato pieces does not indicate rate of drying—only that drying occurs. Also, 20% to 25% moisture content potatoes will spoil unless further dried to 8% to 12% moisture. Drying speed depends on (*a*) thinness of the cross section of the cut potato and (*b*) how much and how well the air moves past the cut potato surfaces. The CIP pilot plant used potatoes cut into 2 millimeter shreds which were loosely spread on screen bottomed trays to a depth of about 3 centimeters. The screen bottomed trays were inclined at an angle of about 30 degrees so that prevailing winds pass through the layer of shredded potatoes. With air of 70% to 80% relative humidity and moving at 1610 meters per hour (one mile per hour) some 40% to 50% of the water can be removed from the cut potato pieces between late afternoon and mid-morning the following day. This leaves only the final drying to a desirable 10% moisture content to be accomplished by direct solar energy during the following day.

The two-stage dryer developed for the CIP pilot plant is described below. The design, size and management of such a dryer must be modified according to specific local needs and conditions.

Construction. The dryer consists of two-tier wooden racks (Figure 22) to hold the drying trays inclined at an angle of about 30 degrees to the prevailing wind. At Huancayo the midday sun and prevailing winds are from the same general direction. All exposed wooden parts are painted black to absorb some of the solar energy not directly falling on the product. The drying area is surrounded by screens to keep out birds and insects (Figure 23). The roof is of clear plastic to admit solar energy and exclude rain.

Operation. First stage (wind energy). About 10 kilograms of cooked shredded potatoes are placed on the screen-bottomed trays and the loaded trays are placed on the lower rack. In this position the product will be dehydrated by the wind from mid-afternoon to mid-morning.

Second stage (solar energy). After the first stage, the potatoes will have lost about 45% of their water and will be somewhat shrunken in appearance. To avoid inefficiency due to parts of the trays left uncovered by potatoes, the contents of two or three trays are placed onto one tray. This one tray should then be exposed to direct solar energy on the upper rack for final drying during the day. The two empty trays can be cleaned and reloaded with fresh product, to be dried by wind energy that night.

Consider a typical situation:

Assume the cooked shredded potatoes are exposed for 12 hours (1800 hours to 0600 hours the following day) to air of 10°C, 71% relative humidty and moving at 1610 meters per hour (1 mile per hour). As this air passes through the product, it will pick up moisture from the product and emerge at 80% relative humidity. (Usually the temperature will decrease by about 0.5 °C and humidity will increase to 84%.

After 12 hours, 3.6 kilograms of water will be removed from a tray containing 10 kilograms of cooked shredded potatoes. This 3.6 kilograms is about 45% of the total water to be removed. The actual amount removed will be greater or less, depending on velocity of the air and its humidity.

Figure 23. Various products being dehydrated in solar unit. Screen walls and transparent plastic roof offer protection from insects and foreign materials while allowing free air movement.

19

After 0600 hours the direct solar energy will be absorbed by the product which will increase in temperature to 40°C to 50°C, about 15°C to 20°C warmer than the ambient air. The product will re-radiate this energy in the form of evaporated water. This re-radiated energy combined with the daytime wind energy will dry the cut potatoes to a moisture content of about 10% in 2 to 4 hours.

This leaves adequate time to remove the dried potatoes, to clean the trays and to reload for the next drying cycle.

Information here is specific for potatoes. The same principles of using fresh air energy for initial drying and solar energy for final drying can and have been applied to other vegetables, fruits and meats (Table 7). But each product has a different equilibrium humidity and the ratio of drying accomplished in each stage will vary. For example, the equilibrium humidity of onions is substantially higner than for potatoes. It is not necessary to determine detailed equilibrium humidities. A few simple drying experiments will provide an adequate guide to ratios between the two drying stages.

In such a drier the temperature of the product should never exceed 50°C, the temperature that causes rapid loss of quality in dehydrated vegetables, including rice and other cereals. Examples of temperatures within the CIP dehydrator compared with ambient temperatures are shown in Table 8.

Milling

Cutting the cooked potato prior to dehydration may not always result in a dried potato of the size desired by the end user. This requires that the dried potato be "milled" to the desired size for soups, traditional dishes, or flour for bread or noodles.

A mill based on the traditional rotating stones (35-centimeter diameter) of the wheat or rice mill is used for grinding dehydrated potatoes (Figure 24). The mill, operated at about 450 revolutions per minute, breaks up the shredded dried potato, or, depending on a simple adjustment, grinds the potato to a fine flour.

Other types of mills may be equally satisfactory.

Table 7. Comparison of drying times in CIP solar dehydrator of various vegetables and meats.

Vegetable	Hours to dry	Vegetable	Hours to dry
potato	20	onion	10
sweet potato	10	garlic	8
yucca	8	peas	9
carrot	13	pepper (hot)	11
squash	10	pepper (sweet)	11
oregano	3	Meat	
parsley	3	beef (cooked)	14
turnip	14	chicken (cooked)	14

Note: The actual time needed to dry a particular product will depend on weather (wind or sun), size and shape of particle to be dried.

Table 8. Comparison of ambient and dehydrator air temperature (Huancayo, Peru).

Date	Air	TIME 0800	1130	1500
1 Jan. '78	Ambient	12°C	21°C	20°C
	Dehydrator	20	50	34
2 Jan. '78	Ambient	11	22	20
	Dehydrator	19	42	38
3 Jan. '78	Ambient	10	22	20
	Dehydrator	23	45	38

Figure 24. Design of a mill, actually built in the Mantaro Valley of Peru, is the type used for grinding cereals. It can also be used for grinding dehydrated potatoes.

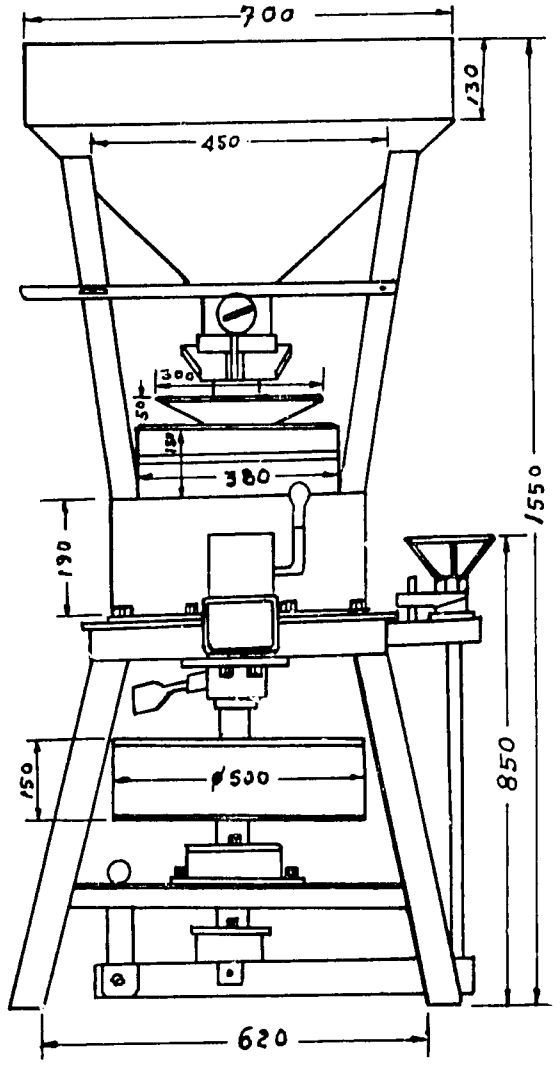

MILL
Capacity: 100 kg/hr
Velocity: 450 rpm
Stones: granite, 35 cm in diameter
Dimensions in millimeters

20

Sizing

A simple sifter separates the ground dehydrated potatoes into the desired sizes (Figure 25).

The sifter consists of screens inclined at an angle of about 15 degrees. The screens are oscillated to assist the movement of the product over them. Screens are selected so that the openings separate the ground potato into desired sizes. As the desired size may change from time to time, the screens must be removable and interchangeable.

An arrangement at the end of the sifter permits collection of various sizes of the product into separate containers.

Motors for Dehydrating

The previously described equipment can be driven by a gasoline motor or by several small electric motors.

A suggested arrangement with a gasoline motor is illustrated in Figure 26. Gasoline motors are rated for power at sea level. If they are operated at higher altitudes their power output is reduced by about 10% for each 1,000 meters above sea level. For example, the 11 horsepower motor (at 3,600 revolutions per minute) used in CIP pilot plant delivers only 7 horsepower at the 3,300-meter elevation of Huancayo. Motors are not routinely operated at maximum speed. At the CIP pilot plant the motor was operated from 2,700 to 3,000 revolutions per minute. This resulted in a 6 horsepower output, adequate for the equipment described. However, a single motor is somewhat awkward to use because of the needs for shafts, pulleys and belts.

Electric motors, if dependable electricity is available, are usually lower in initial cost, more flexible in installation and easier to operate. A separate 5 horsepower motor can be used with the mill and sifter and these units can be installed in any convenient location, such as in a building separate from the other equipment. Another small motor (1 horsepower) can be used for peeler and cutter. When selecting an electric motor, choose those with the lowest revolutions per minute. This will make it easier to further reduce the speed to the proper revolutions per minute for the equipment being driven. Select motors of "waterproof" construction.

A complete layout of equipment and motors for the dehydrated potato plant is suggested in Figure 26.

Operation of Plant

The basic plant design described is to process 1 metric ton of fresh potatoes into approximately 200 kilograms of dehydrated product per day. Simple modification with proper management may increase this capacity. Errors in construction and mismanagement will reduce capacity possibly below an acceptable economic level.

The plant should operate daily for a period of several days. For example, potato preparation is done during the first part of the day. Dehydration starts in the after-

Figure 25. The mill and sifter. Dehydrated potatoes, placed in upper hopper, are continuously fed into the standard cereal rotating-stone mill. The mill discharges ground potatoes onto oscillating screens, which separate them according to size.

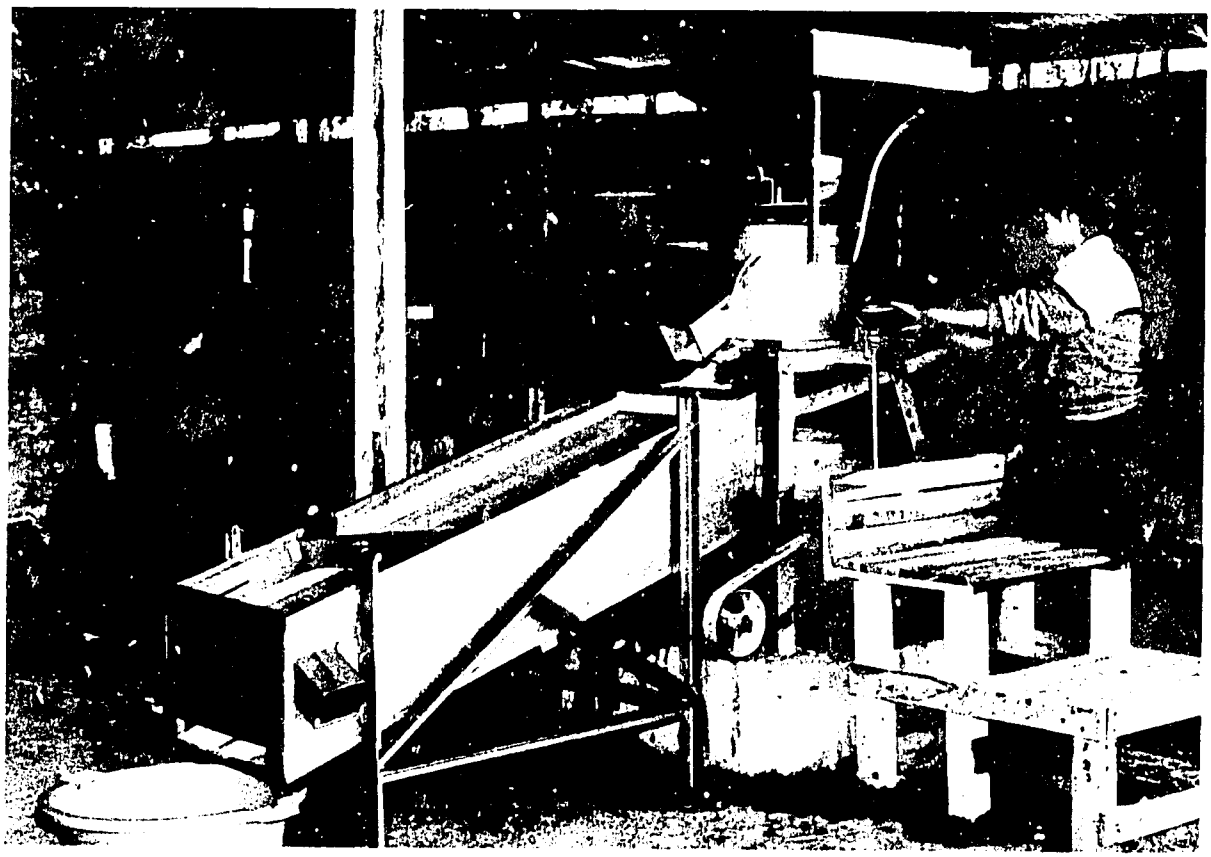

21

noon and will continue during the night and the earlier part of the following day. During this final (morning) drying period additional tubers are to be prepared for the process to continue.

The work force required for this plant should consist of four laborers and a supervisor. The laborers must be assigned specific jobs. The supervisor lends temporary assistance as needed and assures that the plant functions smoothly.

A typical work day schedule depends on local customs. The following is presented as a guide.

Hours	Work by Four Laborers
0700-0800	Preparation of plant. Place water in the cookers, start fires, and fuel motors. Stir the drying potatoes from previous day and consolidate by placing contents of 2 or 3 trays onto 1 tray, thus freeing trays and space for the current day's work. The free trays are cleaned.
0800-1200	Each hour, peel and trim 200 kilograms of potatoes. At the same time, cook, cool, cut and spread an equivalent amount of potatoes each hour, taking into account peeling and other losses.
1200-1300	Lunch (workers take staggered lunch periods so that equipment operates continuously.)
1300-1500	Check the supply of potatoes for next day's operation. Collect the dried potatoes from the previous day's operation.
1500-1600	Stir the drying potatoes, clean equipment and prepare for the following day.

It is important to clean all equipment immediately after use. Particles of food left on equipment decay and contaminate the food products being processed during the following period.

Figure 26. Suggested layout for dehydrated potato plant.

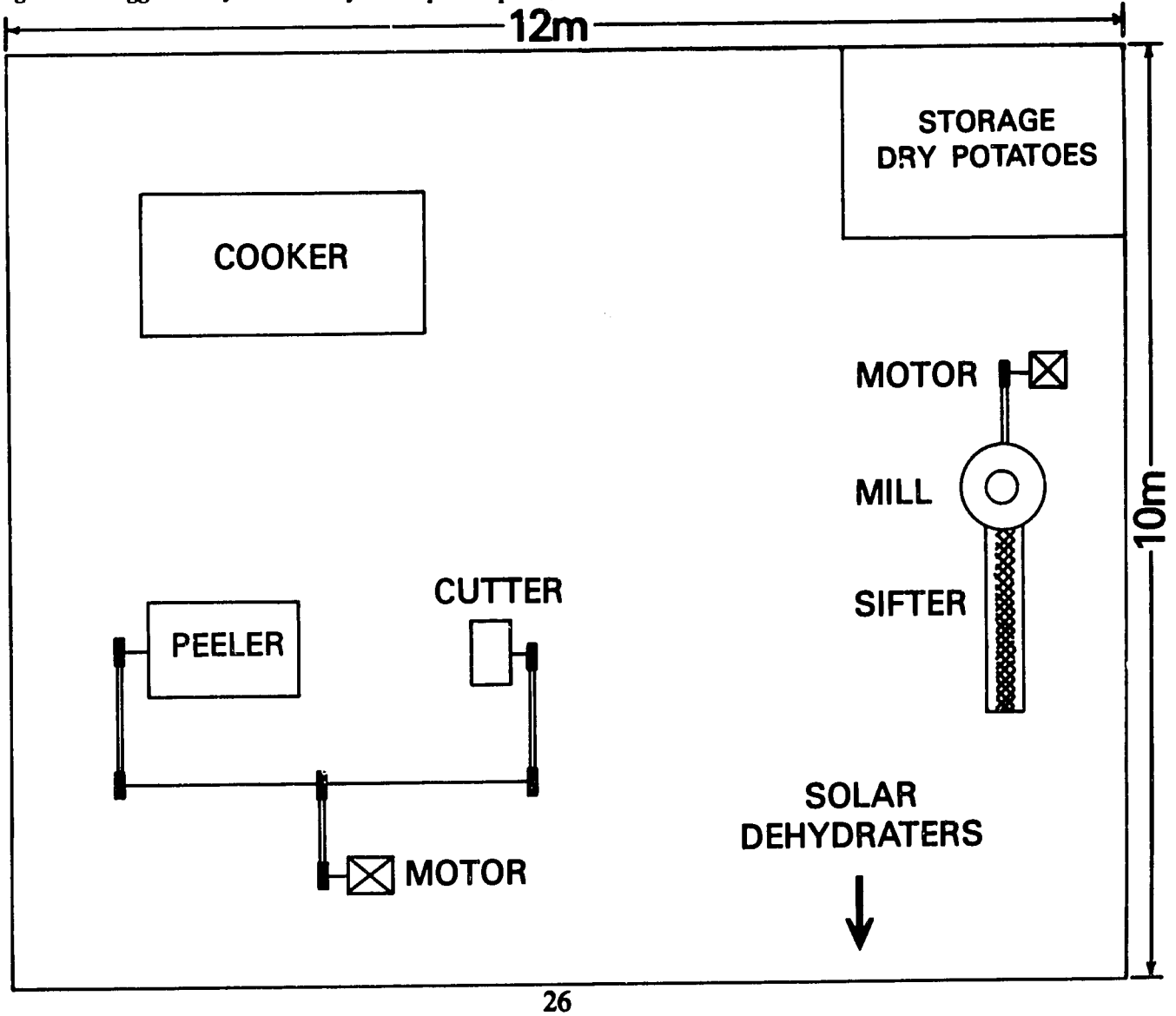

22

STARCH

Flow Diagram (potato starch)

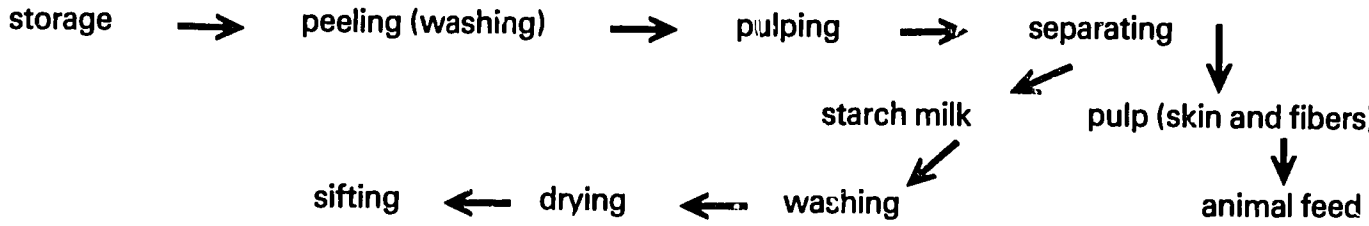

Introduction

Processing starch uses simple equipment. All that is needed is machinery to:

- wash or peel potatoes,
- pulp the tubers to free the starch by breaking the cells in clean potatoes,
- a method to separate free starch from the pulp,
- tanks for washing the starch, and,
- a starch dryer and sifter.

Main Uses of Starch:

- For foods, such as in soups, sauces and desserts.
- In other foods such as bread, biscuits and crackers.
- In industry, such as textile and paper manufacturing.

Requirements

Water. Processing starch requires substantial amounts of water for washing. This water must be readily available as well as a method for disposal of waste water.

Varieties. Any potato variety can be used for production of starch, the principal criterion being the cost of potatoes per kilogram of finished starch. Small potatoes or those of inferior quality (damaged, diseased, misshaped) usually are available at a low price and are satisfactory for making starch. In Europe, potatoes especially high in starch are grown specifically for starch production. The bitter potato of the high Andes mountains is an excellent source of starch. Table 9 compares starch content of six Peruvian varieties.

Table 9. Ratio of fresh potato to starch in pilot plant tests with six varieties.

Variety	Kilograms fresh potato to produce one kilogram of starch
Cuzco	11.0
Mariva	9.5
Renacimiento	7.4
Revolucion	10.5
Tomasa Condemayta	10.0
Shiri (bitter)	7.4

Storage. Storage of potatoes used for processing starch is the same as that for dehydration.

Peeling (washing). Clean potatoes before pulping for starch. The equipment for washing is the same as used for dehydrating potatoes. However, as with potatoes for dehydration, peeling (Figures 27 and 28) removes soil from potatoes without the necessity of a preliminary wash. Furthermore, the capacity of the pulper used in the CIP pilot plant was 25% greater when peeled potatoes were used. Peeling is thus recommended before pulping. (Refer to peeling and washing in section on dehydrating potatoes).

Pulping. Potato cell walls must be broken open to free the starch and separate it from skin and fibers (pulp).

It is impossible to break all cells but the efficiency of producing starch depends on how many cells are ruptured. Normally from 70% to 75% of the starch is freed in this manner. It is possible to free more than this amount although the special effort to do so is usually not economical. At least 60% of the starch must be collected for the plant to be economical.

In large scale plants, the equipment for breaking the cells is separate from the equipment for separation of starch "milk" from the pulp. It is possible that a small mill (for example, a small "hammer" mill) and small

Figure 27. Peeler used in production of potato starch. The belt drive is at the rear of the drum.

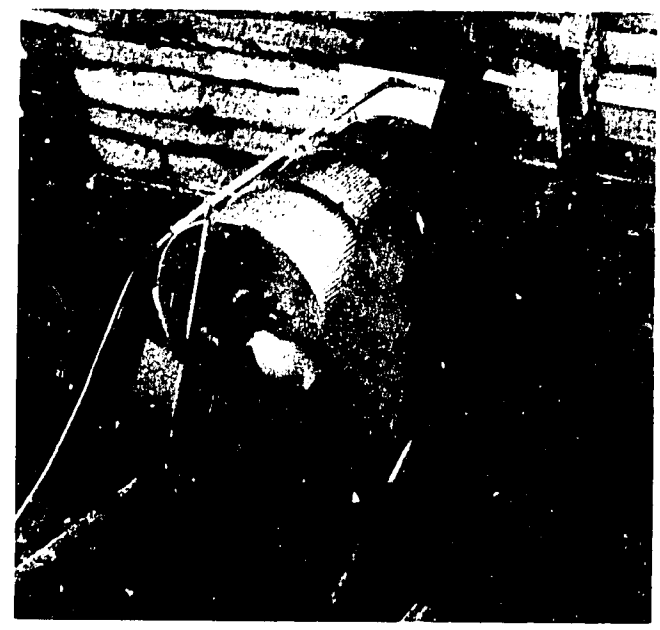

23

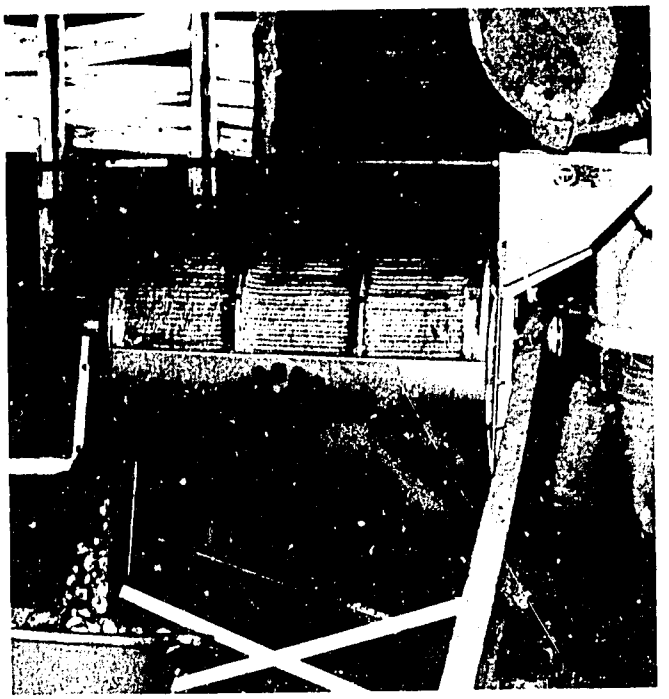

Figure 28. Potatoes for making starch are placed in the hopper (upper right) to enter the peeler. After about 4 minutes in the machine, the peeled potatoes are discharged (lower left). Note small size and poor quality of the potatoes that can be used.

screening equipment (a comparative-size centrifuge screen or shaking screen) will work well. Because of its small capacity (2 metric tons of potatoes per day) these two steps, however, were combined in the CIP pilot plant.

A simple machine is used to break open the cells to free the starch and to separate the starch milk from the pulp (skin and fibers). The principal parts of the machine are a rotating disc with points to break open the cells and a screen to separate the starch milk from the pulp (Figures 29, 30 and 31). These two parts are combined to operate from a single motor driven axle (Figure 32). This disc and screen rotate at about 3,500 revolutions per minute and are enclosed in a cast aluminium body. The starch milk passes through the screen and is discharged through an opening into washing tanks. The pulp slides up over the screen and is discharged into a collection container (Figure 33). This pulp can be dried and used as animal feed.

Figure 29. The top casting of pulper removed to show grinding disc (a) and primary pulp separating screen (b). Starch milk passes through and the pulp slides up the screen into a pulp collection bin.

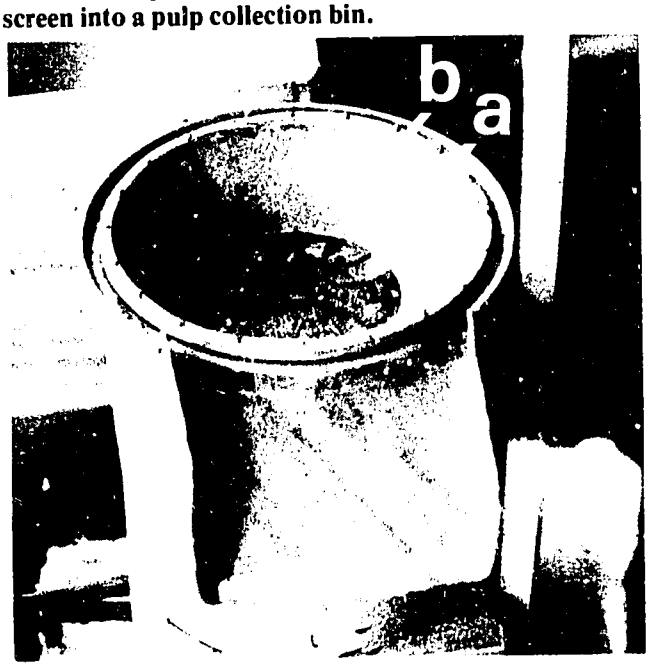

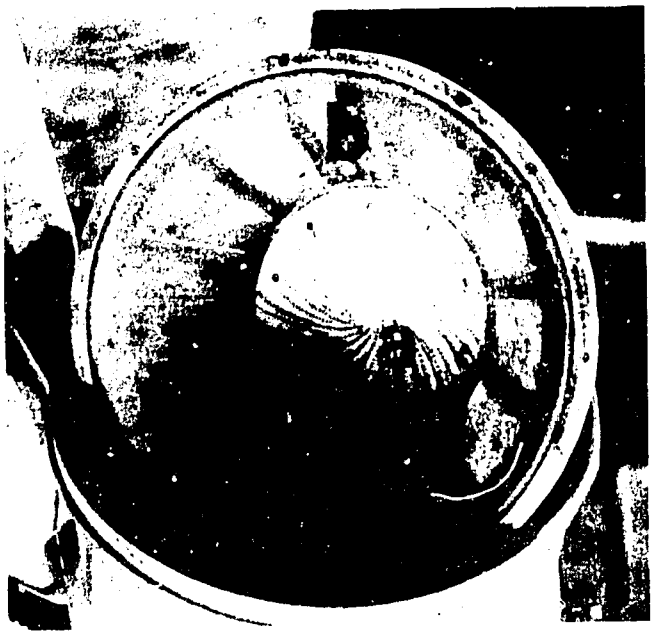

Figure 30. Details of the grinding disc (a) and the primary screen (b).

Figure 31. Arrangement of grinding disc and main body of the pulper.

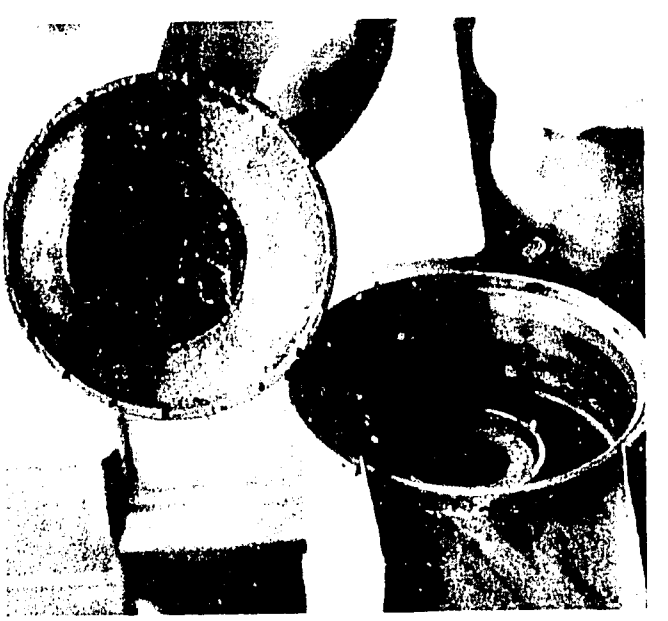

24

Figure 32. The pulley on the motor, belt, and pulley on the pulper. Both pulleys should be 15 to 20 centimeters in diameter. The belt should be 7 to 8 centimeters in width.

Suggested modifications

- Change the base of the pulper so as to accommodate a larger pulley of 15 to 20 centimers in diameter. This would permit a better drive relationship between motor and pulper.
- Place a hopper of about 25 kilograms capacity above the pulper to better regulate the flow of potatoes to the pulper.
- An alternate method for pulping is use of a small "hammer" mill (such as used in starch extraction from grain) to break the potato cells. Then an oscillating screen is used to separate the starch milk from skin and fibers.

Washing. Starch milk is merely potato juice plus starch. The juice contains dissolved minerals, sugars and protein as well as small particles of skin and fibers. If these excess ingredients remain with the starch, an impure "brown starch" is the result. This is of little market value. The market demands a very white starch, so impurities must be removed before the starch is dried.

Large industrial starch plants use special washing and purification equipment. In the CIP plant, a cost-saving and well-tested older system takes advantage of the fact that pure starch settles very rapidly into a firm cake; suspended impurities settle at a slower rate, and dissolved impurities remain in the juice.

The starch milk discharged from the pulper contains small fibers and pieces of skin. Necessary removal of these fibers and skins is accomplished in two steps: screening and sedimentation.

Suggested modifications

In the CIP prototype the screens were operated by hand shaking. It is suggested that a motor/belt-driven oscillating screen be used in the removal of fibers and skins.

Screening. The starch milk is first discharged onto a 120-mesh screen which retains some of the fibers while permitting the milk to pass through (Figures 34 and 35). The screen must be agitated or brushed continuously to prevent fibers from plugging or blinding the screen. As fibers accumulate they are removed by hand and added to pulp discharged from the pulper.

The starch milk then passes onto a 200-mesh screen which is manipulated in the same manner as the 120-mesh screen. The milk passes through the 200-mesh screen and then finally through a 220-mesh screen.

Figure 33. Pulp being discharged from pulper into collecting bin. This pulp can be fed directly to livestock or it can be solar dried, stored, and fed later.

25

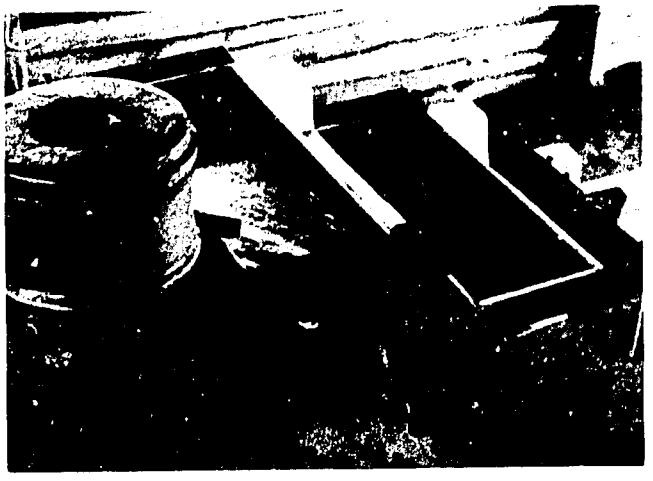

Figure 34. Discharge of starch milk from pulper onto the separating screens. The screens are arranged from coarse- (at top) to finer-mesh (bottom, right).

Sedimentation. The starch milk passing through the final 220-mesh screen still contains small particles that must be removed. The small particles weight less than starch and they settle out of water at a slower rate.

In the CIP plant the washing takes place in two tanks, 0.2 meter high × 0.4 meter wide × 6.0 meters long (Figure 36). These are made of galvanized iron. Other materials and other dimensions in similar proportions can be used. Two of these tanks are required, one for processing the starch milk produced in the morning, and one for the production in the afternoon.

Figure 35. Peeled potatoes fed into pulper (a). The starch milk, plus some skin and fiber, flows through screens (b) and into washing tanks (c).

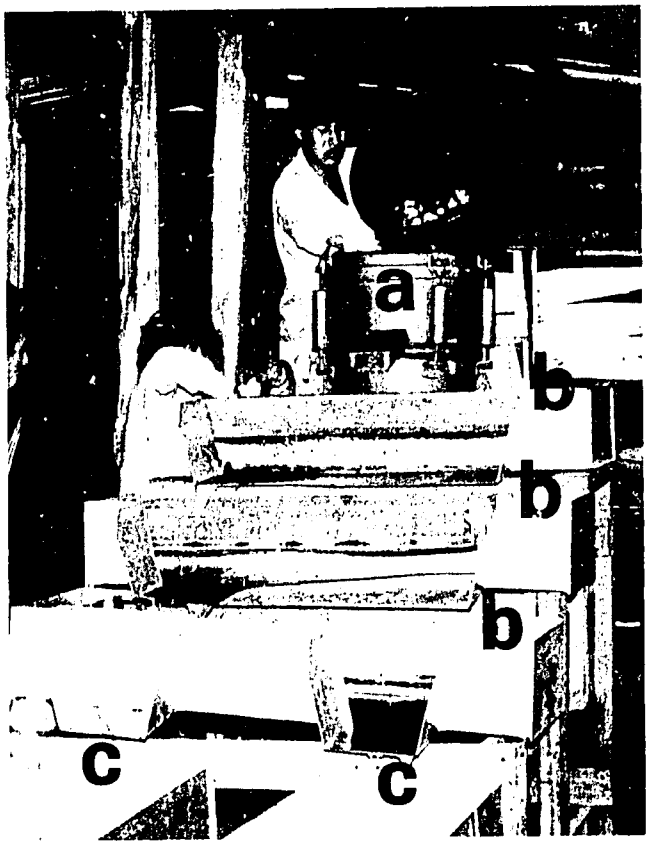

Starch milk from the last screening accumulates in the tank. During this accumulation, starch settles to the bottom of the tank. The discolored liquid from the many dissolved and suspended particles gradually fills the tank and shortly before reaching a point of overflowing is discharged over a weir at the end of the tank. During this discharge, fresh water is added at the upper end of the tank and this continues until all the discolored liquid has been discharged and replaced by clear water.

At this point, no more water is added. The settled starch is stirred and re-suspended in the clear water. It is then allowed to re-settle for 1 to 1½ hours. The weir is then lowered to allow the water to be discharged. The tank is re-filled with fresh water, the starch is re-stirred and re-suspended and again allowed to settle, and the water discharged as previously. This washing is repeated three times. After the third settling and discharge of water, the settled starch cake is removed from the tanks and placed on the trays of the dryer.

Drying. The starch cake is placed on drying trays similar to those used for dehydrating potato. However, these trays have a bottom of black "drill' cloth (Figure 37). This "drill" cloth prevents loss of starch through bottom of the trays. Strong winds cause a loss of starch and it may be necessary to restrict the flow of air through the dryer. Starch dries in a few hours, with an occasional stirring, but as a matter of convenience, the starch is usually left in the dryer overnight.

Milling and Screening. After dehydration, the dried starch contains soft lumps. The lumps can be broken and the starch screened by "brushing" it through the 120-mesh

Figure 36. Final washing of starch in washing tanks. Next step is drying the starch.

26

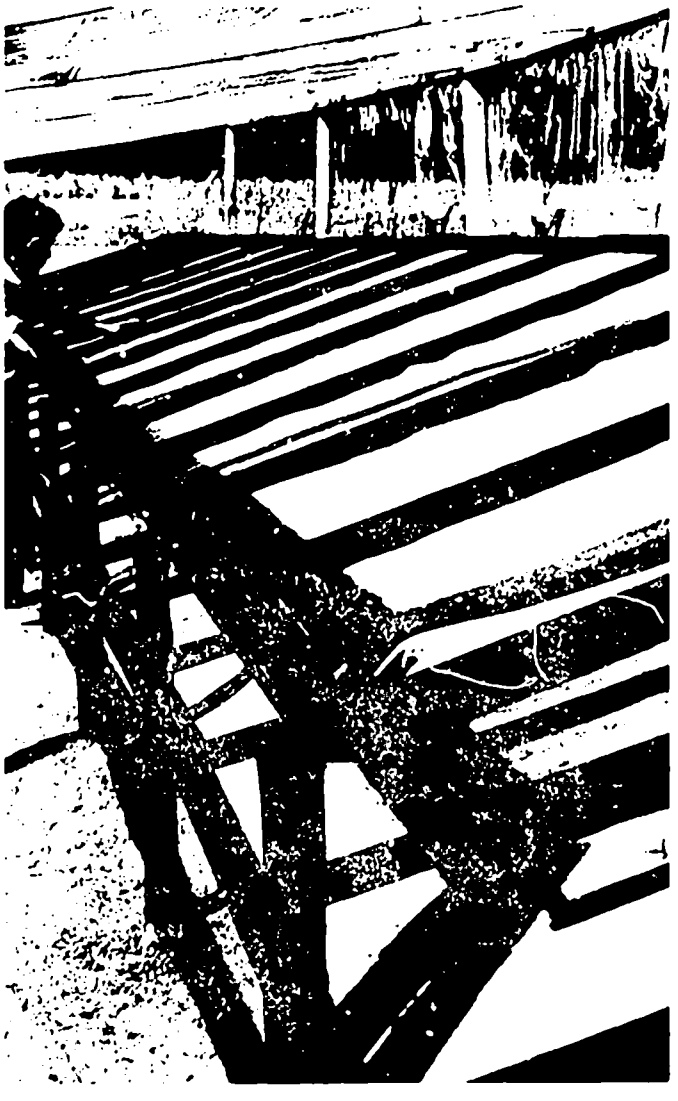

Figure 37. Potato starch drying in solar dehydrator. Note second tier of drying racks below.

screen used in processing starch milk immediately after discharge from the pulper.

Pulp. The pulp (skin, fibers, unbroken potato cells) are collected in a suitable container. Pulp may be fed to animals directly without drying or it can be spread on trays, dried, and stored for feeding at a later time. This pulp dries slowly and may require more than 1 day to dry to a satisfactory moisture level. The dried pulp has about 50% of the feed value of barley.

Motors for Potato Starch. Comments in the section *Motors for Dehydrated Potato* apply equally to the plant for production of potato starch. A 5 horsepower motor is adequate for the pulper, a 1 horsepower motor for the shaking screens and a ½ horsepower motor for the peeler. A suggested layout of equipment and motors is in Figure 38.

Operation of Starch Plant. The CIP plant is designed to process 2 metric tons of fresh potatoes daily. As with the plant for dehydrated potatoes, it must be properly designed and managed.

A work force of four laborers and their supervisor is needed. Each laborer is assigned to a specific job of either peeling, grinding fresh potatoes, operating screens, or washing and drying the starch.

A typical work day depends on local customs. The following is suggested as a guide:

Hours	Work by Four Laborers
0700-0800	Stir starch that is drying in solar unit. Prepare plant (fuel, water, potatoes, containers).
0800-1200	Peel potatoes, 300 kilograms per hour (one laborer); grind and screen, 250 kilograms per hour (two laborers); collect dry starch; wash starch from previous afternoon (one laborer).
1200-1300	Lunch on a staggered-time basis
1300-1700	Peel potatoes, 300 kilograms per hour (one laborer); grind and screen into second washing tank (two laborers); wash starch for morning run.
	Clean plant.

See page 32 for a layout suggestion of starch equipment.

Figure 38. Suggested layout for starch equipment.

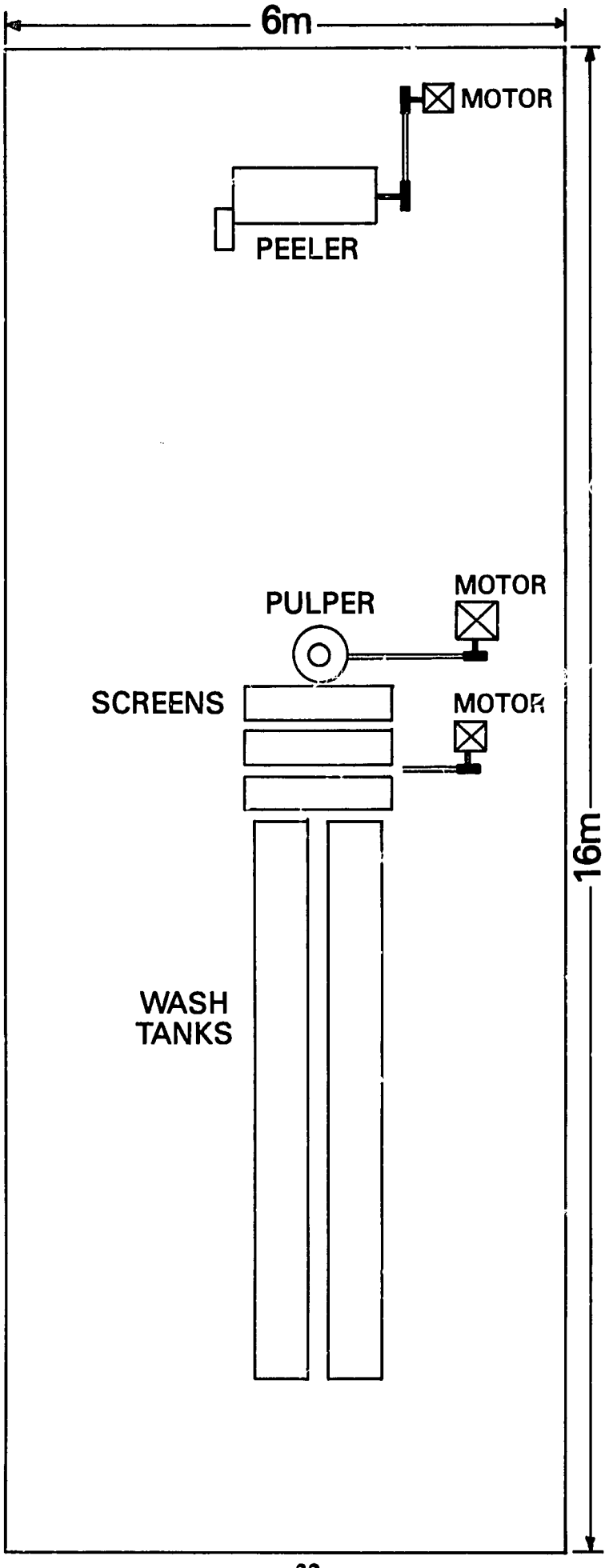

28