PN-AAN-804
ISN 32200

IRRI RESEARCH PAPER SERIES
Number 87 April 1983

RICEMOD: A PHYSIOLOGICALLY BASED RICE GROWTH AND YIELD MODEL

J. A. McMENNAMY AND J. C. O'TOOLE

The International Rice Research Institute
P.O. Box 933, Manila, Philippines

RICEMOD: A PHYSIOLOGICALLY BASED RICE GROWTH AND YIELD MODEL[1]

PNAAN 804

ABSTRACT

Interdisciplinary research efforts often culminate in a better understanding of the entire system, as well as increase knowledge within specific disciplines, for example, soil, crop, and atmospheric sciences. A synthesis or crop modeling approach is helpful in studying rice crop growth and yield as a system. RICEMOD is a rice crop simulation model begun in 1979 with the specific objectives of becoming an explanatory tool for feedback to and direction of future research. This paper describes RICEMOD's development from a relatively simple model for rice growth and yield under luxury nitrogen and water conditions to its current state in which many physical and physiological aspects of crop water deficits have been incorporated.

Part I describes the structure and function of the initial physiologically based simulation model. Part II illustrates soil physical and plant physiological components incorporated to give RICEMOD soil and plant water balance capabilities. These additions extend its potential use to rainfed rice research.

Part III compares the model output with experimental data in which soil and plant water status was monitored during water stress. The model output usually agreed within one standard deviation of the measured soil and plant variables. Sample input-output data sets and a bibliography of rice crop modeling conclude the paper.

Development of the current version of RICEMOD (RICEMOD 300) brought to our attention the lack of field level information about soil physics and root system growth and development. These deficiencies are most acute in rainfed wetlands (lowlands) where subsurface hydrology and soil and plant response to varying water status have received little interdisciplinary research effort.

[1]By J. A. McMennamy and J. C. O'Toole, formerly agricultural engineer and agronomist/crop physiologist, International Rice Research Institute, Los Baños, Laguna, Philippines. Part I is adapted from *Dynamic simulation of irrigated rice crop growth and yield* by J. A. McMennamy (1980b). A paper presented at the 1980 summer meeting of the American Society of Agricultural Engineers, 15-18 June 1980, San Antonio, Texas. Submitted to the IRRI Research Paper Series Committee February 1983.

RICEMOD: A PHYSIOLOGICALLY BASED RICE GROWTH AND YIELD MODEL

Traditional discipline-oriented research has inspired scientific dissection of knowledge into smaller, more comprehensible, and researchable units. The 14 research departments of the International Rice Research Institute (IRRI) operate with discipline orientation.

The dissection method is essential to obtaining knowledge about specific processes, reactions, and interactions between major factors within the complex array of biochemical and biophysical phenomena that interactively constitute the dynamic rice crop system. However, many agricultural research questions require a systems approach — the recombination of various scientific research divisions into the whole. Recombination requires a systems analysis exercise called *crop modeling*.

RICEMOD, a simulation model developed by McMennamy (1980a), began as a simple exercise in dynamic rice crop growth and yield simulation. RICEMOD's objective was to develop a functional model of the rice crop that could be used to assess the relevance and completeness of knowledge about rice science. Initial efforts assumed luxury water and nitrogen conditions, but even with those assumptions the exercise highlighted areas where understanding or quantification was lacking. RICEMOD relies almost entirely on soil, plant, and atmospheric data derived from experiments at IRRI. It must not be utilized out of context nor should it be extrapolated to conditions outside the IRRI experimental farm environment without caution.

The primary objective of RICEMOD is to describe the complex biochemical and biophysical systems interacting in a rice crop that will guide research by elucidating key processes where fundamental or applied understanding is lacking (Loomis et al 1979). RICEMOD is not just the result of data accumulation and synthesis of response functions into an interactive model. It should be used as an explanatory crop model to increase research efficiency and multiply the value of time and money spent (Loomis et al 1979, Spedding 1980).

This paper describes RICEMOD's evolution from a model of rice growth and yield under luxury conditions to its current state, RICEMOD 300, which is physically and physiologically sensitive to soil-water balance.

Part I is the basic simulation model. It illustrates fundamental relationships for canopy light interception, photosynthesis, leaf nitrogen content, maintenance and growth, respiration, and assimilate partitioning.

Part II introduces the expanded model, in which soil physical and plant-root parameters interact to affect water movement in the soil-plant-atmosphere continuum. Transduction of soil water deficits into crop water status and crop water status' effect on transpiration, photosynthesis, and photosynthate partitioning greatly expand RICEMOD's potential application. Rainfed or partially irrigated systems can now be simulated.

Part III provides sample input-output data sets to facilitate use of the model, and includes validation information needed to compare the simulation output to experimental results when water deficits occur in the vegetative and reproductive stages.

Finally, a selected bibliography of rice modeling efforts is provided. The brevity of this rice-modeling bibliography, when contrasted with those of other major cereals, indicates the state-of-the-art in rice crop modeling.

RICEMOD 300 is only one step toward the elaborate goal of synthesizing knowledge of how a rice genotype interacts with its environment. It deals primarily with physical parameters, but invites additions of subroutines that deal with soil and plant chemistry and biophysical properties of the aerial environment. As these processes are researched, incorporated, and validated, the original RICEMOD objective — to provide feedback and identify gaps in knowledge and to stimulate and direct research initiatives — must be kept in mind.

PART I: RICEMOD — THE INITIAL DYNAMIC SIMULATION MODEL OF IRRIGATED RICE GROWTH AND YIELD

Functional relationships within economic, engineering, and biological systems are often difficult to evaluate because of their complexity. Numerical modeling is a useful research tool to assess the researcher's understanding of the system or the validity of suggested cause and effect relationships.

In the plant sciences, crop modeling is often used to inventory and test hypothetical plant performance relationships, and assess environmental effects on plant performance. Where several performance relationships exist, a model can be used to rationalize or resolve conflicting hypotheses about cause and effect relationships. If the model accurately predicts plant growth in most cases, it is considered good, and may help identify research areas with the greatest potential to improve plant performance. Cases in

2

which the good model disagrees with actual plant growth are particularly interesting to plant physiologists and indicate a need for additional research to better understand and define plant behavior.

This paper describes efforts to develop a relatively simple rice plant population model called RICEMOD, which responds to daily weather parameters: solar radiation, maximum and minimum temperature, and day length. The model's accuracy is assessed and potential uses are suggested. RICEMOD is based on selected functional relationships found in rice research literature. The validity and precision of these relationships are not beyond question; hence, the inaccurate performance of the model is not totally unexpected.

The model

The ultimate rice crop growth simulation model should be simple yet comprehensive enough to predict the growth of different varieties under any agroclimatic condition. RICEMOD is far from the ultimate and several major simplifying assumptions have been made:

1. The crop is irrigated and water stress does not limit its growth.
2. The crop is a homogenous plant population of IR36, an IRRI improved, photoperiod-insensitive variety.
3. Luxury levels of plant nutrients are present.

Photosynthesis, respiration, and the partitioning of assimilates are dynamic processes with respect to changes in environmental factors and plant development. In RICEMOD, as in a growing rice plant, photosynthate is produced by the irradiation of leaves. Net photosynthetic product generated is influenced by light intensity, leaf area, canopy shape, leaf thickness, and nitrogen content of the leaf blades. After part of the photosynthate is used for growth respiration, the remainder is distributed to the roots, culm and leaf sheath, leaf blades, and, after the vegetative stage, the panicle. Maintenance respiration continues at night, resulting in some dry matter loss.

Figure 1 is a schematic of the RICEMOD system and illustrates how the model simulates growth through a series of incremental computations. A day is considered to start at sunrise and end at sunrise the following day. Net carbon dioxide exchange rate is calculated each daylight hour for each layer of leaves, and can be repeated more than 100 times per day during the middle of the growing season. This number of calculations would be impractical without a computer. RICEMOD has been programmed in FORTRAN IV and BASIC. The FORTRAN program takes about 10 seconds of computer time/crop (after compilation) when run on an IBM 370/135 computer.

Functional relationships

Photosynthesis has been studied extensively. Researchers have shown that plant photosynthetic rate is significantly influenced by light intensity and spectra, leaf area, leaf canopy structure, plant species and variety, leaf chemical content, temperature, wind speed, plant water status, and air chemistry. In RICEMOD, photosynthesis is the process whereby atmospheric carbon dioxide is fixed by the plant. The process rate is a function of photosynthetically active radiation (PAR) in the 400 to 700 mm waveband incidence per unit leaf area. The function is assumed to fit the rectangular hyperbolic curve described by the following equation (McDonald 1971):

$$P = \frac{I}{\frac{I}{PMAX} + \frac{I}{\gamma I}} \qquad (1)$$

where: I = hourly PAR (cal cm^{-2}),

P = hourly carbon dioxide exchange rate (g CO_2 m^{-2}),

$PMAX$ = max hourly carbon dioxide exchange rate as I approaches infinity, and

γ = initial slope of the response curve.

McDonald showed that the initial response curve slope (γ) varies with temperature and variety, but it is assumed to be constant in RICEMOD because the changes are relatively small for rice.

Takano and Tsunoda (1971) and Yoshida and Coronel (1976) showed that major $PMAX$ variations can be related to changes in leaf nitrogen content. RICEMOD employs a relationship suggested by Yoshida.

$$P_{60} = 2.6\, AWNL \qquad (2)$$

where P_{60} = the net photosynthetic rate (g m^{-2}h^{-1}) at a 21.6 cal cm^{-2}h^{-1} (60 klx) PAR level, and

$AWNL$ = the ratio of leaf nitrogen weight to leaf area (g m^{-2}).

$PMAX$ for a given $AWNL$ is found by substituting P_{60} for P in equation 1 with I = 21.6 cal cm^{-2} h^{-1}.

Areal leaf nitrogen content ($AWNL$) is a function of specific leaf weight ($SPLWT$) and the percent nitrogen content of the leaves ($PCTNL$). In RICEMOD, both parameters are treated as functions of plant age alone. Although environmental factors have an influence, specific functional relationships were not found in the literature reviewed.

Data supplied by Puckridge and Haws (Fig. 2, 3) on IR36 were used to establish the $SPLWT$ and $PCTNL$ functions:

$$SPLWT = 23.4 + .173D, \text{ and} \qquad (3)$$

$$PCTNL = 5.62 - .0382\, D, \qquad (4)$$

where D = the age (days) of IR36 plants.

3

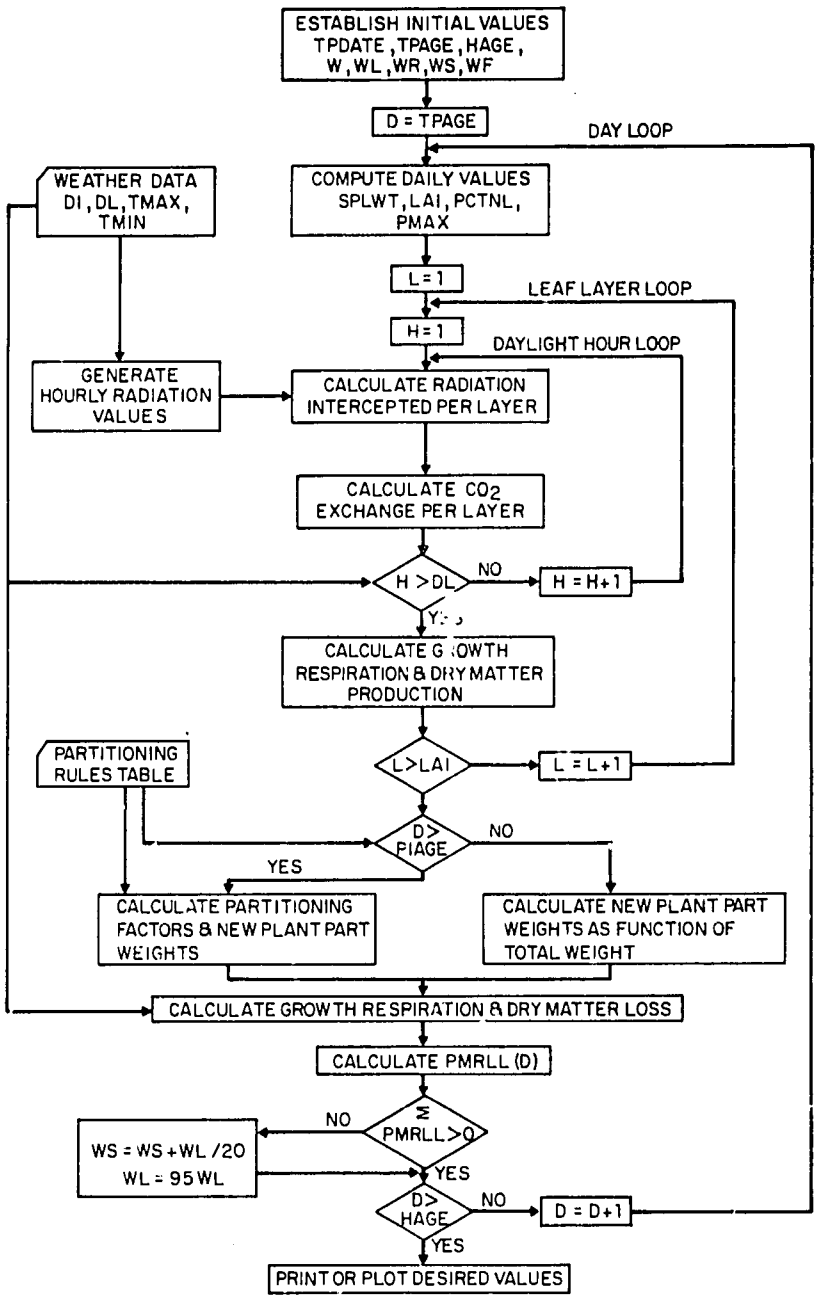

1. Schematic of the RICEMOD growth simulator. D = plant population age (d); DI(D) = daily total PAR on day D (cal cm^{-2}); DL = day length (h); FL, FS, FR, FF = fraction (g g^{-1}) of photosynthate partitioned to panicles (F), leaf blades (L), culm and leaf sheath (S), and roots (R); H = hour of the day (H = 0 at sunrise) (h); HAGE = plant age at harvest (d); L = leaf layer (the top layer is layer 1); LAI = leaf area index (m^2 m^{-2}); PCTNL = percent nitrogen content of leaves (g g^{-1} × 100); PIAGE = plant age (d) at panicle initiation; PMAX = max daytime net CO_2 exchange rate (g m^{-2}h^{-1}); PMRLL = daily net CO_2 exchange (g m^{-2}) for lowest leaf layer; PT(D) = total net CO_2 exchange (g m^{-2}) during daylight hours of day D; SPLWT = specific leaf weight (g m^{-2}); TMAX = max daily temp (°C); TMIN = min daily temp (°C); TPAGE = age (d) of plants at transplanting; TPDATE = transplanting date; W = total wt of plant population (g m^{-2}); WF, WL, WR, WS = dry wt (g m^{-2}) of panicle, leaf blades, roots and leaf sheath, and culm.

To determine the total amount of carbon dioxide fixed per day, the light intercepted by each layer of leaves must be determined (I in equation 1). Hourly radiation, $I(D, H)$, is derived from daily radiation using a method suggested by Arkin et al (1978). That function uniformly distributes the daily PAR value under a sinusoidal distribution curve which is symmetric about solar noon. Realistic values are expected when using dry season weather data because the sky is normally clear, but Arkin's method will not yield hourly radiation values that mimic the non-uniform hourly radiation pattern expected during the monsoon season. Further study is needed to evaluate how the use of this method affects the model's performance during cloudy periods.

The effect of temperature on photosynthesis is not considered in RICEMOD. Horie (1979) found that the net photosynthetic rate varies less than 10% for leaf temperatures between 20 and 35° C. Daytime temperatures in tropical rice-growing areas are normally within this range.

The random distribution canopy model used by Curry et al (1975) and Curry (1971) for soybean and maize was adopted for RICEMOD. This Montieth-type model is based on a series function of light interception by successive leaf layers. For example, a leaf canopy with a leaf area index (LAI) of 3.4 is treated as 4 horizontal layers — 3 full layers and a bottom layer with 0.4 m^{2}m^{-2} of ground area. The top layer is exposed to full radiation but, a fraction (S) passes through the layer without being intercepted. The value of S

4

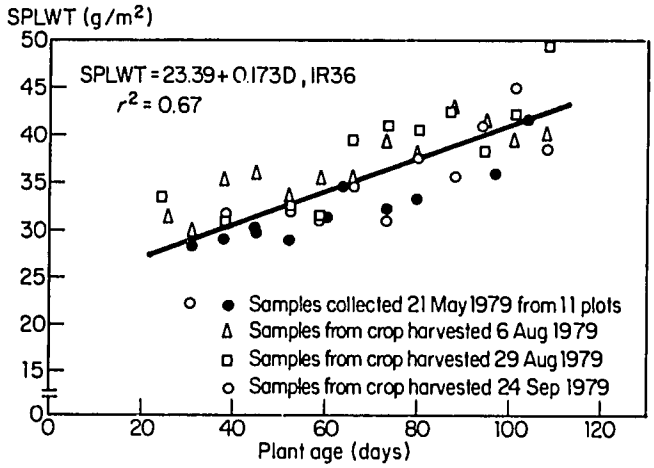

2. The RICEMOD functional relationship between plant age (D) and specific leaf weight (SPLWT). Data for IR36 were supplied by D. W. Puckridge (pers. com.).

is dependent on canopy architecture. Curry used a value of 0.64 for the flat (phlanophile) leaf structure of soybeans. The more erect leaf arrangement of maize received a value of 0.5.

The radiation intercepted by the topmost layer $I(D,H)$ is $[1-S)\ (1-T)]$, where T is the transmission coefficient. In RICEMOD, the term $[1-S)\ (1-T)]$ is called the *attenuation factor (AF)*. The radiation intercepted by any layer (L) can be expressed:

$$I(D,H,L) = I(D,H)\,AF(1-AF)^{L-1} \qquad (5)$$

The net daily carbon dioxide exchange rate during daylight hours can be found by solving equation 1 for each layer for each hour of the day.

Respiration is related to plant growth and metabolism. RICEMOD uses the concept suggested by McCree (1974), in which growth respiration is treated as a function of photosynthetic activity, and maintenance respiration is a function of temperature and total plant weight. Respiration rates of various plant parts differ and the differences change as the plant matures (Hesketh et al 1971, IRRI 1972, Yamaguchi 1978). The model is constructed so that respiration rates can be treated as independent variables for different plant parts, but at the present level of model development, respiration rates are held constant. The RICEMOD growth function includes the effects of growth respiration and has the form:

$$PLUSW(D) = PT(D)[1 - RG]/1.43 \qquad (6)$$

where $PLUSW(D)$ = dry weight added on day D (g m^{-2}),

$PT(D)$ = net carbon dioxide exchange rate during the daylight hours of day D,

RG = growth respiration coefficient (g g^{-1}, and

1.43 = factor for converting dry weight to a carbon dioxide equivalent.

Metabolic reactions continue at night until the substrate reserves produced during daylight hours are exhausted. Beyond this point, further carbon dioxide is lost only to maintenance requirements. McCree points out that both growth and maintenance respiration occur during the day and night hours. This seems reasonable based on the results of his experiments, but to simplify RICEMOD, growth respiration is treated solely as a tax on photosynthesis (equation 3). The dry matter weight lost to maintenance respiration at night is determined for each plant part as follows:

$$WL(D) = [WL(D-1) + PLUSWL(D)]\,[1-(RM)(TC)(\frac{24-DL(D)}{12})] \qquad (7)$$

where WL(D) = leaf blade weight at end of day D,

$WL(D-1)$ = leaf blade on the previous day,

$PLUSWL(D)$ = weight added to leaf blades on day D,

RM = maintenance respiration coefficient, and

TC = temperature coefficient.

DL(D) = day length on day D.

RM is based on a 12-h dark period and the last term in equation 7 is an adjustment for a night length different than 12 h. Similar equations are used for the culm and leaf sheath, roots, and panicles. McCree's temperature coefficient (TC) is found using average night temperature:

$$NT(D) - TMIN(D+1) + \frac{TMAX(D) - TMIN(D+1)}{4}, \qquad (8)$$

and McCree's equation:

$$TC = .004 + .0019NT + .001NT^2, \qquad (9)$$

where $NT(D)$ = average night temperature (°C) on day D,

$TMIN(D+1)$ = minimum temperature (°C) on next day, and

$TMAX(D)$ = maximum temperature (°C) on present day.

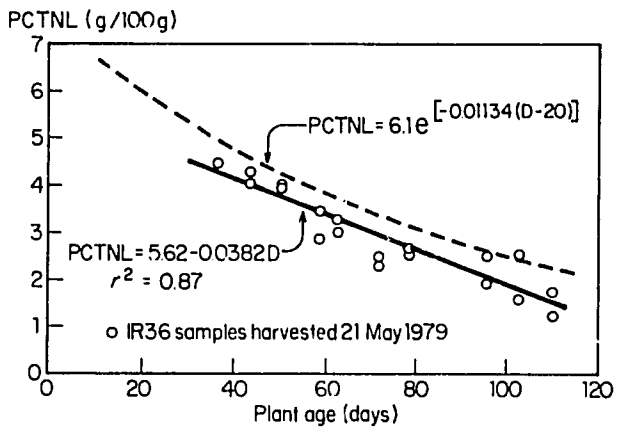

3. The RICEMOD functional relationship between plant age (D) and percentage nitrogen in the leaf blades (PCTNL). The relationship developed by Murata (1975, broken line) is shown for reference. Data for IR36 were supplied by D. W. Puckridge (pers. com.).

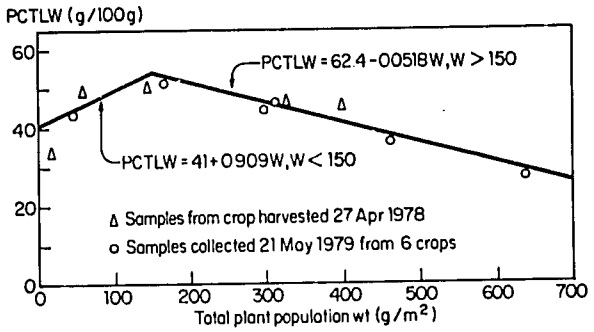

4. The RICEMOD functional relationship between plant age (D) and percentage leaf blade weight (PCTLW). Data for IR36 were supplied by L. D. Haws and D. W. Puckridge (pers. com.).

To reduce computation time, equations 7, 8, and 9 are solved once per day. The weight lost per day to maintenance respiration is relatively small compared to the weight gained, and daily temperature fluctuations are normally small in tropical rice-growing areas.

The partitioning of assimilates produced by photosynthesis to the various plant parts ultimately decides crop growth and yield. Some plants exhibit adaptive mechanisms whereby the partitioning of assimilates is adjusted to help the plant cope with an abnormal environment. For example, some species and varieties will develop a more extensive root system in dry conditions than in wet (Hsiao et al 1976), and some rice varieties will develop longer internodes when grown in deep water than in shallow water. The state-of-the-art knowledge about these adaptive mechanisms seems more qualitative than quantitative. Developing the partitioning part of the model is challenging.

RICEMOD uses two approaches to modeling plant development; one is used exclusively during the vegetative growth phase and the other is used only after panicle initiation when the reproductive phase begins.

During the vegetative phase, plant growth in RICEMOD is governed by an *architectural standard*. Figure 4 shows the percentages of leaf weight versus total weight for several IR36 crops grown at different times of the year. Based on the consistency of this relationship, it is assumed that the relative percentages represented by the culm and leaf sheath, leaf blades, and roots are normally a function of the total population weight per unit area.

After panicle initiation, a *distribution factor* concept developed by Monsi and Murata (1969) is used to regulate plant growth. As the plant develops, the distribution factors are changed by interpolating between points specified in a *partitioning rules table* (Fig. 5). As more quantitative information about adaptive growth functions becomes available, the RICEMOD program can treat values in the partitioning rules table as variables, but they are currently assigned constant values.

If the daily carbon dioxide exchange is negative in the lowest leaf layer, it is assumed that further leaf growth is unnecessary. To smooth the effect of one unusual day, RICEMOD maintains a running 3-day balance on net carbon dioxide exchange in the lowest layer. If the 3-day balance becomes negative, 5% of the leaf weight is transferred to the stems. It is important to note that this redistribution of leaf material is superimposed on the partitioning process and exerts a gentle correcting effect on plant development without completely replacing the model's basic control mechanism — the partitioning rules table.

Model output

To use the model, coefficients must be first selected for the functional relationships. Several of the required coefficients, derived empirically, have been described. In the absence of measurements on IR36, some coefficients were assigned values.

The attenuation factor (AF) is 0.45 when the LAI is greater than 2. For LAI less than 2, AF is increased linearly to a value of 0.75 as the LAI approaches zero. These values give the model a reasonable response. The 0.45 value corresponds to extinction coefficient measurements in full rice canopies with erect leaves similar to IR36 made by Uchijima (1976).

The growth respiration coefficient (*RG*) is 0.28 g CO_2 g^{-1} CO_2, and the maintenance respiration coefficient (*RM*) is 0.017 g g^{-1} of dry matter. These values are within the range found in the literature (Penning de Vries 1975). More exact information is needed on how the values are influenced by variety, plant part, and plant age.

To test RICEMOD's ability to predict IR36 development, weather data supplied by IRRI's Agroclimatic Service Unit were used (Angus and Manalo 1979). Only total solar radiation is measured at IRRI and total radiation was converted to PAR as follows:

$$\text{If } I_{Total} < 35 \text{ cal cm}^{-2}\text{ h}^{-1} \text{ then } I_{PAR} = I_{Total}\,(.65 - .0043\, I_{Total}),$$

$$\text{but if } I_{Total} \geq 35 \text{ cal cm}^{-2}\text{ h}^{-1} \text{ then } I_{PAR} = .5\, I_{Total} \qquad (10)$$

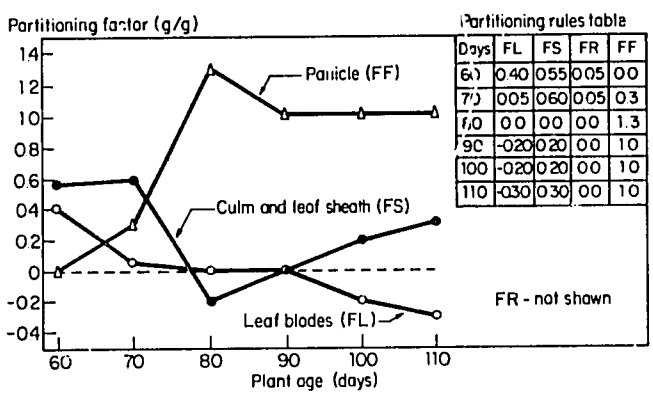

Days	FL	FS	FR	FF
60	0.40	055	005	00
70	005	060	005	0.3
80	00	00	00	1.3
90	-020	020	00	10
100	-020	020	00	10
110	-030	030	00	10

5. RICEMOD partitioning rules table and graphic representation of partitioning factors (AF) derived by interpolating between values in the table. IR36.

The growth curves shown in Figure 6 were produced using IRRI's weather data. They agree reasonably well with field measurements and expected values of harvest index, time of maximum leaf area development, and slope of the total dry matter accumulation curve (Angus 1979).

The yields predicted by RICEMOD were also compared with field yields obtained over a 1-year period. The IRRI department of Rice Production Training and Research (RPTR) has an ongoing experiment in which IR36 is continuously planted and harvested (Morooka et al 1979). Figure 7 shows the maximum weekly yield harvested from the RPTR plots at the IRRI farm in Los Baños. Using IRRI's weather data, RICEMOD yields were similar to field yields except when disease, rat damage, or typhoons caused low yield.

Yoshida and Parao (1976) conducted a series of experiments to determine the effects of shading at different growth stages on the yield of IR747-B2-6, a variety that matures in 96 days. Several adjustments were made to compare the yield predicted by RICEMOD with the experimental results:

1. Plant weight at transplanting was increased 35% (compared to that used in the RPTR plots) to compensate for the higher seedling population used in the experiment.
2. Panicle initiation in IR747-B2-6 occurs at about 45 days, so the architectural standard that regulates growth in RICEMOD during the vegetative growth phase was discontinued at 46 days.
3. The time scale in the partitioning rules table was shortened to reflect the earlier flowering and maturity dates of IR747-B2-6, and panicle partitioning factors were reduced because early-maturing varieties are thought to translocate less assimilate than late-maturing ones.
4. Actual weather data were not readily available, so the following constant values were used: $I(D) = 475$ cal cm^{-2}, $TMAX = 31.5°$ C, $TMIN = 22.6°$ C, and day length = 12.9 h.

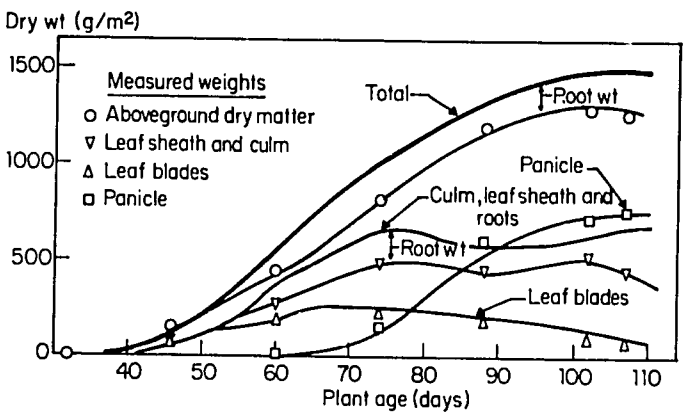

6. Comparison of dry weights predicted by RICEMOD and field data for IR36 narvested 17 May 1978. The RICEMOD curve for total dry matter includes root weight, whereas the field measurements do not. Measured weights were supplied by IRRI's Plant Physiology Department.

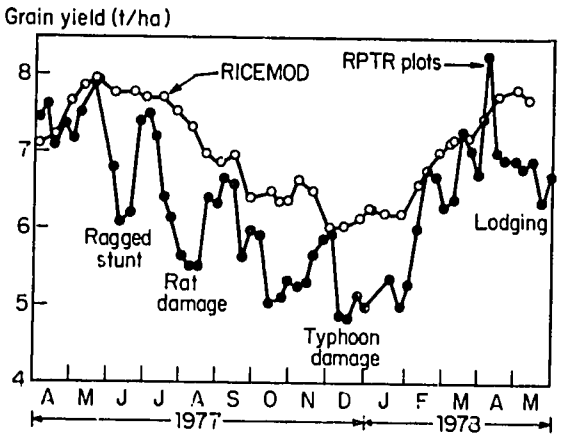

7. Comparison of maximum weekly IR36 yield in RPTR plots (Morooka et al 1979) and yields predicted by RICEMOD.

RICEMOD closely predicted yield reduction caused by shading during the grain-filling period (Fig. 8), but did not correctly predict total yield reduction in the reproductive stage. Yoshida and Parao (1976) hypothesized that the main cause of yield reduction at this stage is the pronounced spikelet reduction. Maximum grain number is fixed at the end of this stage, and an abundant assimilate supply during grain filling can do no more than fill grains that are more or less fixed in number and size.

It was assumed that the grain number (sink size) is fixed before flowering and maximum panicle weight was limited to 6 times the panicle weight at 1 week before flowering. This condition did not affect yield or harvest index for crops shaded during the vegetative and ripening growth places, but it improved RICEMOD's agreement with the field data for crops shaded during the reproductive stage.

Yield reduction predicted at 25 and 50% shading during the vegetative stage agreed with the experimental results, but different results were obtained at 75% shading. One hypothesis is that the plants in the field receive higher radiation than predicted because of light reflected from the paddy water surface. Under higher radiation, the plant canopy develops quickly and this effect is not expressed. With low radiation, the canopy develops slowly and this effect could become significant.

Conclusion

Limited experience with RICEMOD indicates that reasonably accurate results can be expected using daily weather data, but a more sensitive model may require hourly values, especially if diurnal fluctuations are irregular.

RICEMOD can be used to study the relative effects of radiation, leaf blade nitrogen content, respiration rate, and assimilate partitioning on rice plant growth. To accurately predict growth, more information is needed on respiration and the environmental effects on nutrient uptake and distribution, leaf blade thickness, and plant growth control mechanisms. The model would be more useful if it were sensitive to water and nutrient stresses.

1

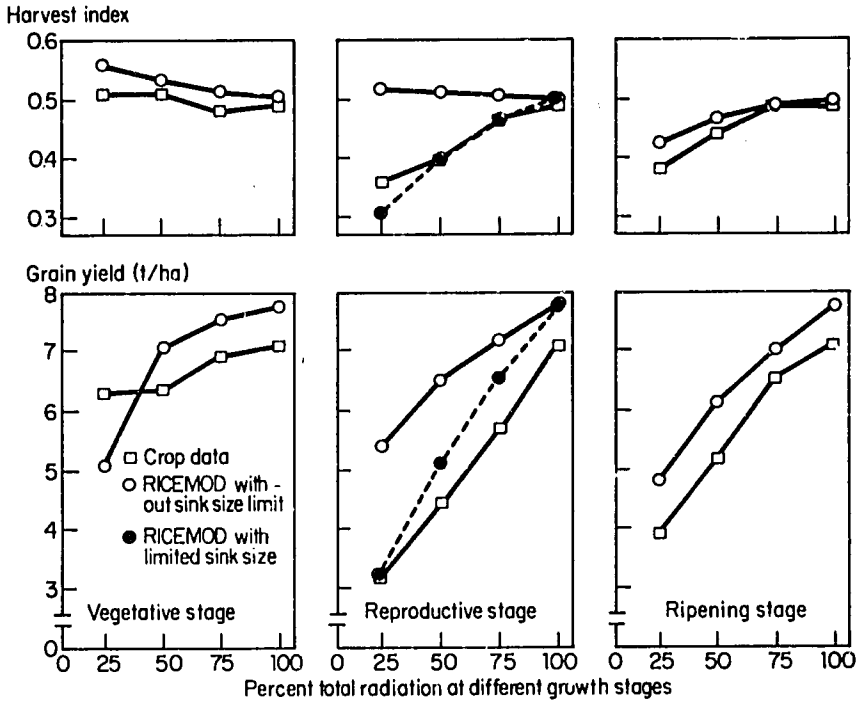

8. The effect of shading IR747-B2-6 at different growth stages on harvest index (upper curves) and grain yield. For the crops shaded during the vegetative and ripening stages. RICEMOD's predictions were not affected by imposing sink size limitation. Crop data are from Yoshida and Parao (1976).

PART II. RICEMOD — INCORPORATION OF SOIL WATER BALANCE AND ATTENDANT FEEDBACK MECHANISMS TO SIMULATE SOIL AND CROP WATER DEFICITS

RICEMOD, as illustrated in Figure 1, advanced understanding of the interactive component systems responsible for rice crop growth and yield. One of the major environmental factors that affect rice growth is adequacy of water in the root zone and the physiological consequences of water deficits and their effects on yield-determining growth stages.

Part II of RICEMOD development simulates soil and crop water status as conditioned by soil water recharge and atmospheric evaporative demand. Figure 9 illustrates the subroutines developed to manipulate root density by soil layer, soil hydraulic and diffusivity parameters, soil evaporation, soil resistance to water movement, transpiration and leaf water potentials, root water extraction, and the soil water balance by layer in the profile. Concurrently the effects of water stress on phenological development, leaf senescence, and photosynthate partitioning were added to the original model.

In Parts I and II, the data base used to describe fundamental relationships was generated for a single cultivar, IR36, and using climatic and edaphic conditions at the IRRI experimental farm. Any extrapolation must be done with caution.

The flow chart organization of RICEMOD 300 (Fig. 9) and each component subroutine is referenced in the complete program listing.

CO_2 fixation

The RICEMOD CO_2 fixation routine described by McMennamy (1980a,b), is in Part I. Here we briefly review RICEMOD photosynthesis and illustrate how daily unstressed photosynthesis is modified for use in the expanded water balance sensitive model.

Photosynthesis rate is a function of photosynthetically active radiation (PAR) — 400 to 700 mm — incident per unit leaf area. The function is assumed to fit a rectangular hyperbolic curve (McDonald 1971).

$$P = \frac{I}{\frac{I}{PMAX} + \frac{I}{\gamma I}} \cdot \text{Transpiration Ratio}, \qquad (1)$$

where I = hourly PAR, P = hourly photosynthesis rate, $PMAX$ = maximum hourly photosynthesis rate as I approaches infinity, and γ or GAMMA is the initial slope of the photosynthesis-light response curve. Major changes in $PMAX$ have been related to leaf nitrogen content (Takano and Tsunoda 1971, Yoshida and Coronel 1976).

RICEMOD uses a relationship in which P_{60}, the net photosynthetic rate at 60 klx (21.6 cal cm^{-2} h^{-1}), is 2.6 times the ratio of leaf nitrogen weight to leaf area. $PMAX$ for a given leaf nitrogen content is found by substituting P_{60} into equation 1 with I = 21.6 cal cm^{-2} h^{-1}. In RICEMOD, areal leaf nitrogen, as determined by leaf nitrogen content and specific leaf weight, is determined by plant age.

Carbon dioxide fixed per day is a function of PAR reaching each layer of leaves. Hourly radiation in the random distribution canopy model used by Curry et al (1975) is used in equation 1 to calculate net photosynthesis for each layer of leaves for each hour of the day.

The effect of air temperature on photosynthesis is thought to be minimal in tropical lowland conditions and is

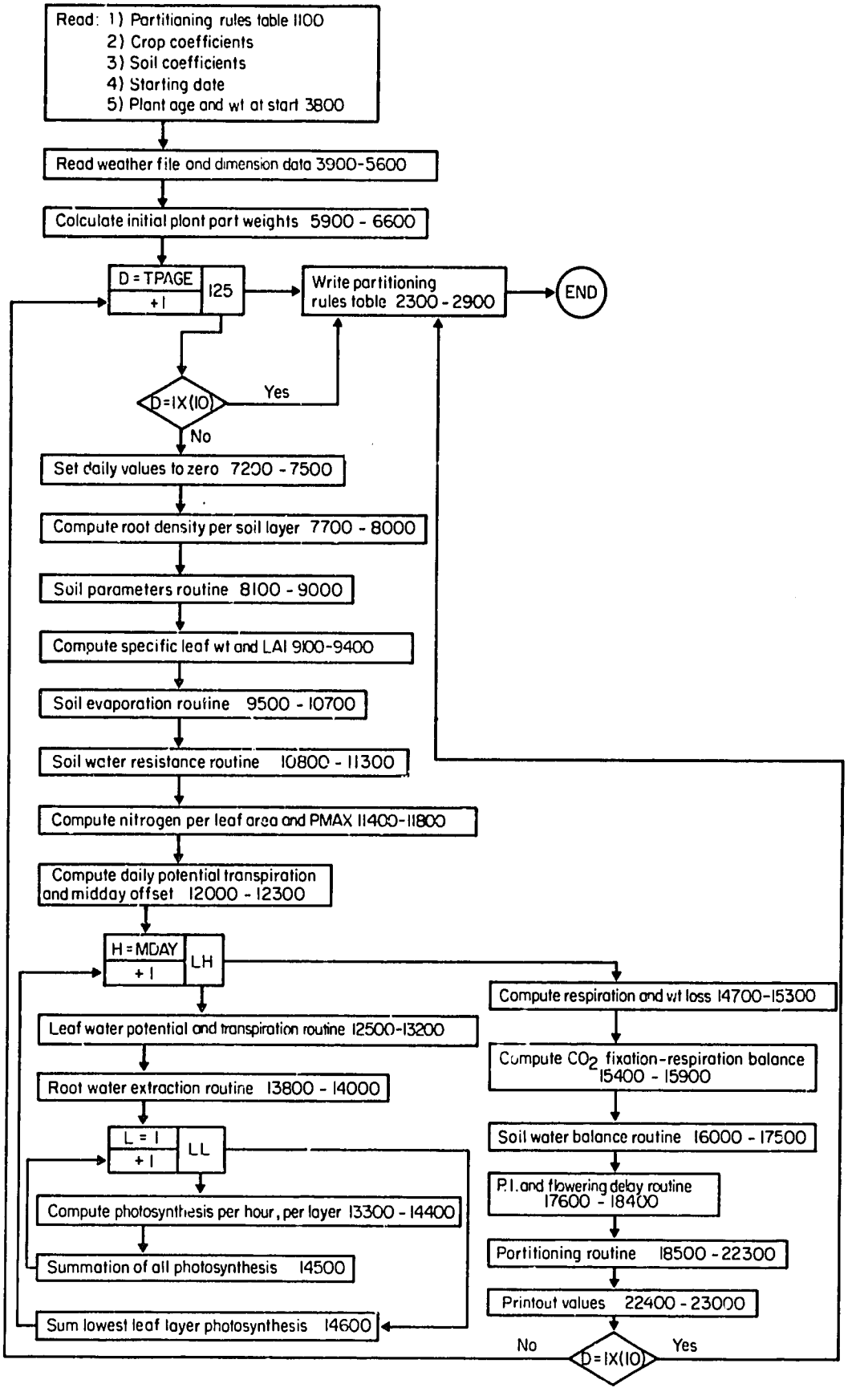

9. Flow chart of RICEMOD 300. Line numbers refer to program listing.

9

```
00100   C   THIS IS A MICROSOFT FORTRAN VERSION OF RICEMOD 300
00200   C         BY JOHN A. MCMENNAMY AND JOHN C. O'TOOLE
00300           INTEGER TMIN(140),TMAX(140),DI(140),DL(140)
00400          *  ,RF(140),PAN(140)
00500           DIMENSION XP(14,10),XI(14),XAF(10),PAR(14)
00600          *  ,IX(10),YL(10),YS(10),YR(10),YF(10),PMRLL(4)
00700          * ,Z(3),DS(4),RL(4),R(4),TPOT(14),T(14),RWX(4)
00800          * ,ASCOEF(4)
00900           REAL LAI,MC(4),MCLMT,KS(4),MSUC(4),LWPOT(14),LSS
01000           INTEGER D,H,TPAGE,TPDATE(10),DATE,RN
01100           DATA PMRLL,XDP,XPDLL,SUMSD,SUMRF,FREEW/9*0.0/
01200          *,ASCOEF(2),ASCOEF(3),ASCOEF(4)/1.75E+06,2*3.E+06/
01300           CALL OPEN (7,'IRVFILE/TXT',0)
01400           READ(7,100) IX,YL,YS,YR,YF
01500           READ(7,101) RMCOEF,RGCOEF,ANCOEF,TPAGE,
01600          *,Z,ASCOEF(1),BSCOEF,AKCOEF,BKCOEF,ADCOEF
01700          *,BDCOEF,XW,AF,MC,PANF,RP
01800           READ(7,102) TPDATE
01900       100 FORMAT(10I5,40F5.2,I5)
02000       101 FORMAT(3F10.4,2I2,3F3.0,8F10.0,5F3.3,F5.3,F5.1)
02100       102 FORMAT(10I5,1206)
02200           ENDFILE 7
02300       103 WRITE(2,102)(IX(K),K=1,10)
02400           WRITE(2,205)(YL(K),K=1,10)
02500           WRITE(2,205)(YS(K),K=1,10)
02600           WRITE(2,205)(YR(K),K=1,10)
02700           WRITE(2,205)(YF(K),K=1,10)
02800           IF(XDP.NE.0.) GO TO 200
02900       205 FORMAT(10F5.2)
03000           WRITE(2,206)RMCOEF,RGCOEF,ANCOEF,ASCOEF(1),BSCOEF
03100          *,AKCOEF,BKCOEF,ADCOEF,BDCOEF,PANF,AF
03200       206 FORMAT('0',3F6.3,2F10.2,2F10.7,F10.8,3F10.4)
03300     C INITIAL VALUES
03400           RDS=.000016
03500           GAMMA=.46667
03600           PI=3.1416
03700           BNCOEF  = ANCOEF/150.
03800           EXK=-1.*ALOG(AF)
03900     C******** READ WEATHER FILE AND DIMENTION DATA ******
04000           WRITE(2,207)TPDATE(1),TPAGE
04100       207 FORMAT('0',3X,'TP DATE =',14,' AND TP AGE =',13)
04200           CALL OPEN (7,'IRWDATA1/TXT ',256)
04300           IREC=(TPDATE(1)-1)/10
04400           ISHFT=TPDATE(1)-IREC*10 +9
04500           IDT=TPAGE -ISHFT
04600           DO 201 JD=IDT,141,10
04700           JDP9=JD+9
04800           READ(7,202,REC=IREC,ERR=3000) DATE,RN,(RF(K),
04900          *PAN(K),DI(K),TMAX(K),TMIN(K),DL(K),K=JD,JDP9)
05000           IREC=IREC+1
05100       202 FORMAT(1X,I4,I3,10(6I3,3X),I38)
05200       201 CONTINUE
05300           ENDFILE 7
05400           IDT20=IDT+19
05500           DO 250 J=IDT,IDT20
05600       250 AI20=AI20+DI(J)/20.
05700           DO 998 L=1,10
05800       998 XAF(L)=AF*(1.-AF)**(L-1)
05900     COMPUTE POPULATION WT. AT TRANSPLANTING ***************
06000           M=(TPAGE-15)/10 + 1
06100           XWS=XW*YS(M)
06200           XWL=XW*YL(M)
06300           XWR1=XW*YR(M)*.60
06400           XWR2=XW*YR(M)*.30
06500           XWR3=XW*YR(M)*.10
06600           XWF=0.0
06700     C***  START OF DAILY PLANT GROWTH *********************
06800           WRITE (2,1100)
06900           DO 999 D=TPAGE,125
07000           IF(D.EQ.IX(10)) GO TO 990
07100           XDL=LL(D)/10.
07200           XDP=0.0
07300           XPAN=.01*PAN(D)
07400           XPDLL=0.0
07500           TRANS=0.0
07600           IF(D.GE.IDT+20) AI20=AI20+(DI(D)-DI(D-20))/20.
07700     C*** COMPUTE ROOT DENSITY PER SOIL LAYER **************
07800           RL(1)=XWR1*1.8/Z(1)
07900           RL(2)=XWR2*1.8/Z(2)
08000           RL(3)=XWR3*1.8/Z(3)
08100     C*** SOIL DIFFUSIVITY, MATRIC SUCTION & CONDUCTIVITY **
08200           DS(1)=ADCOEF*EXP(BDCOEK*(MC(1)-.18))
08300           DO 425 J=1,4
08400           RWX(J)=0.
08500           MSUC(J)=ASCOEF(J)*EXP(BSCOEF*MC(J))
08600           KS(J)  =AKCOEF*MSUC(J)**BKCOEF
08700           IF(KS(J).GT.0.5) KS(J)=0.5
08800           IF(J.EQ.1) GO TO 425
08900           IF(KS(J).GT.0.2) KS(J)=0.2
09000       425 CONTINUE
09100     C*** COMPUTE SPECIFIC LEAF WT. (G/M**2) AND LAI *******
09200           SPLW=23.4+.173*D
09300           LAI=XWL/SPLW
09400           LL=LAI+1.
09500     C**** COMPUTE SOIL EVAPORATION ************************
09600           IF (LAI-6.) 450,452,452
09700       450 EPOTS=XPAN*EXP(-1*EXK*LAI)
09800           MCLMT=ALOG(1+EPOTS*BDCOEF*Z(1)/2/ADCOEF)/BDCOEF
09900           IF(MC(1).GE.MCLMT) GOTO 451
10000           DMCLMT=ADCOEF*EXP(BDCOEF*MCLMT)
10100           ESOIL=EPOTS*DS(1)/DMCLMT
10200           GOTO 453
10300       451 ESOIL=EPOTS
10400           GOTO 453
10500       452 ESOIL=0.0
10600           EPOTS=0.0
10700       453 CONTINUE
10800     C*** COMPUTE SOIL WATER RESISTANCE ******************
10900           DO 460 J=1,3
11000           RS=ALOG(1./RDS/PI/RL(J))/4./PI/RL(J)/Z(J)/KS(J)
11100       460 R(J)=RS + RP*J/SQRT(RL(J))
11200           SUMSR=MSUC(1)/R(1)+MSUC(2)/R(2)+MSUC(3)/R(3)
11300           TOTRES=1./(1./R(1) + 1./R(2) + 1./R(3))
11400     C*** COMPUTE NITROGEN/LEAF AREA ***********************
11500           PCTNL=ANCOEF-BNCOEF*D
11600           AWNL=SPLW*PCTNL/100
11700           PMAX=2.6*AWNL
11800           PMAXR=1./PMAX-.007
11900     C*** COMPUTE HOURLY TOT. RAD., PAR & TRANSPIRATION ****
12000           TPOTD=PANF* (XPAN-EPOTS)
12100           MDAY=(XDL+.9) /2
12200           LH=MDAY*2 -1
12300           OFFSET=MDAY-XDL/2.-.50
12400           DO 888 H=MDAY,LH
12500           TPOT(H)=TPOTD*PI**SIN(PI*(H-OFFSET)/XDL)/XDL/2.
12600           LWPOT(H)=(TPOT(H)+SUMSR) * TOTRES
12700           CLWP=4.+.02*AI20
12800           IF (LWPOT(H).LT.CLWP) GO TO 465
12900           LWPOT(H)=CLWP-1.+ SQRT(LWPOT(H)+1.-CLWP)
13000           IF(H.EQ.MDAY)  SUMSD=SUMSD+1
13100       465 T(H)= LWPOT(H)/TOTRES -SUMSR
13200           TRANS=TRANS + 2.*T(H)
13300           XI(H)=DI(D)*PI*SIN(PI (H-OFFSET )/XDL)/XDL/2
13400           IF(XI(H).LE.0.) XI(H)=0.
13500           IF(XI(H).LT.35.) FPAR=.65-.0043*XI(H)
13600           IF(XI(H).GE.35.) FPAR=.5
13700           PAR(H)=FPAR*XI(H)
13800     C*** COMPUTE PHOTOSYNTHESIS & ROOT WATER EXTRACTION ***
13900           DO 470 J=1,3
14000       470 RWX(J)=RWX(J) + 2.*T(H)*TOTRES/ R(J)
14100           DO 777 L=1,LL
14200           XLI=XAF(L)*PAR(H)
14300           XP(H,L)=2./(PMAXR +1./GAMMA/XLI) *T(H)/TPOT(H)
14400           IF(L.EQ.LL) XP(H,L)=2.*XP(H,L)*(LAI+1.-LL)
14500       777 XDP=XDP+XP(H,L)
14600       888 XPDLL=XPDLL+XP(H,LL)
14700     COMPUTE GROWTH RESP. (RG) AND NAINT. RESP. RATE
14800           TNITE=(TMIN(D+1)+(TMAX(D)-TMIN(D+1))/4.)/10.
14900           TCOEF=.044+.0019*TNITE+.001*TNITE**2
15000           RMRATE=TCOEF*RMCOEF*(24.-XDL)/12.
15100           RG=XDP*RGCOEF
15200           RMF=1.-RMRATF
15300           PLUSW=(XDP-RG)/1.43
15400     COMPUTE P:R BALANCE IN LOWEST LAYER OF LEAVES
15500           PMRLL(3)=PMRLL(2)
15600           PMRLL(2)=PMRLL(1)
15700           RMLL=2.*RMRATE*(LAI+1-LL)*SPLW
15800           PMRLL(1)=XPDLL*(1.-RGCOEF)-RMLL
15900           PRBAL=PMRLL(1)+PMRLL(2)+PMRLL(3)
16000     C*** COMPUTE SOIL MOISTURE AT END OF DAY **************
16100           XRF=RF(D)/100
16200           SUMRF=SUMRF+XRF
16300           FLUX1=SQRT(KS(1)*KS(2))*((MSUC(1)-MSUC(2))/Z(1)
16400          * *1000. -1.)
16500           FLUX2=SQRT(KS(2)*KS(3))*((MSUC(2)-MSUC(3))/Z(2)
16600          * *1000. -1.)
16700           FLUX3=SQRT(KS(3)*KS(4))*((MSUC(3)-MSUC(4))/Z(3)
16800          * *1000. -1.)
16900           MC(1)=MC(1)+(XRF-ESOIL+FLUX1-RWX(1)+FREEW/Z(1)
17000           IF(MC(1).LE..55) FREEW=.0
17100           IF(MC(1).LE.0.55) GO TO 480
17200           FREEW= (MC(1)-.55)*Z(1)
17300           MC(1)= .55
17400       480 MC(2)=MC(2)+(FLUX2-FLUX1-RWX(2))/Z(2)
17500           MC(3)=MC(3)+(FLUX3-FLUX2-RWX(3))/Z(3)
17600     C*** COMPUTE P.I. & FLOWERING DELAY DUE TO STRESS *****
17700           IF(D.NE.IX(5)) GO TO 520
17800           DO 510 J=5,10
17900       510 IX(J)=IX(J)+ .3*SUMSD
18000           SUMSD=0.
18100       520 IF(D.NE.IX(7)) GO TO 501
18200           DO 530 J=7,10
18300       530 IX(J)=IX(J)+ .3*SUMSD
18400           SUMSD=.0
18500     COMPUTE PARTITIONING OF PHOTOSYNTHATE
18600       501 DO 440 J=2,10
18700           IF(IX(J).GE.D) GO TO 405
18800       440 CONTINUE
18900     C*** CHECK FOR UNPRODUCTIVE LOWEST LAYER OF LEAVES ****
19000       405 IF (PRBAL.GE.0.) GO TO 400
19100           YL(J)=YL(J)-.05
19200           YS(J)=YS(J)=.05
19300       400 IF(LWPOT(MDAY).LT.CLWP+1.) GO TO 410
19400           IF(D.GT.(IX(6)+5)) GO TO 410
19500           FL=0.0
19600           FR=0.5
19700           FF=0.0
19800           GO TO 420
19900       410 X=1.00*(D-IX(J-1))/(IX(J)-IX(J-1))
20000           FL=YL(J-1) +X *(YL(J)-YL(J-1))
```

10

```
20100          FF=YF(J-1) +X *(YF(J)-YF(J-1))
20200          FR=YR(J-1) +X *(YR(J)-YR(J-1))
20300          IF(LWPOT(MDAY).GT.CLWP-3)FF=FF-FF*(LWPOT(MDAY)
20400         1 -(CLWP-3.))/6.
20500          IF(LWPOT(MDAY).GT.CLWP-3)FL-FL-FL*(LWPOT(MDAY)
20600         1 -(CLWP-3.))/6.
20700      420 FS=1.- FL-FF-FR
20800          XWL=XWL +FL*PLUSW
20900          XWS=XWS +FS*PLUSW
21000          XWR1=XWR1+FR*PLUSW*TOTRES/R(1)
21100          XWR2=XWR2+FR*PLUSW*TOTRES/R(2)
21200          XWR3=XWR3+FR*PLUSW*TOTRES/R(3)
21300          XWF=XWF +FF*PLUSW
21400      504 XWL=XWL*RMF**2
21500          XWS=XWS*RMF
21600          XWR1=XWR1*RMF
21700          XWR2=XWR2*RMF
21800          XWR3=XWR3*RMF
21900          XWF=XWF*RMF**2
22000          XW=XWL+XWS+XWR1+XWR2+XWR3+XWF
22100          JD=D-5 *D/5)
22200          IF(JD.NE.0) GO TO 999
```

```
22300          XWTOP=XWL+XWS+XWF
22400      990 WRITE(2,1000)D,XWL,XWS,XWR1,XWF,XW,XWTOP,LAI,XDP
22500         1 ,PRBAL,XPAN,Z(1),MC(1),RWX(1),FLUX1,R(1)
22600         1 ,XP(MDAY,1),LWPOT(MDAY),ESOIL,FREEW
22700          WRITE(2,1001)XWR2,XRF,Z(2),MC(2),RWX(2),FLUX2
22800         1 ,R(2),XP(9,1),LWPOT(9),TRANS
22900          WRITE(2,1001)XWR3,SUMRF,Z(3),MC(3),RWX(3),FLUX3
23000         1  ,R(3),XP(LH,1),LWPOT(LH),SUMSD
23100          IF(D.EQ.IX(10)) GO TO 103
23200      999 CONTINUE
23300          GO TO 103
23400     1000 FORMAT (I4,4F7.1,2F8.1,3F6.2,F7.2,F5.0,3F6.3,E9.2
23500         1 ,2F7.2,2F6.2
23600     1001 FORMAT(18X,F7.1,41X,F7.2,F5.0,3F6.3,E9.2,2F7.2,
23700         1 F6.2)
23800      200 CONTINUE
23900     1100 FORMAT ('0','DAY    LEAF    STEM    ROOT    PAN.',2X
24000         1,'DRY WT    TOPS    LAI    XDP PRBAL PAN/RF',1X
24100         1 ,'Z1/3 MC1/3    RWX  FLUX  R1/R3  XP(H,1)',
24200         1 ,' LWP(H)    E/T FREEW')
24300     3000 STOP
24400          END
```

CO_2 FIXATION

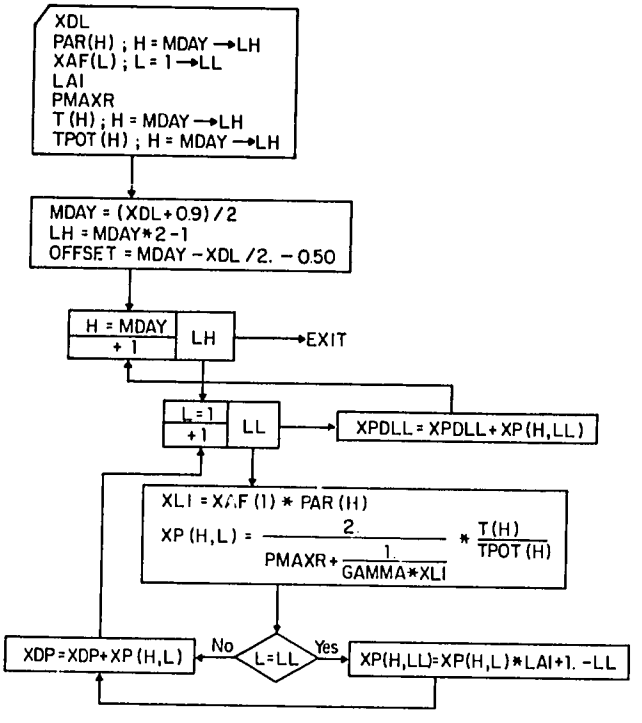


```
12100          MDAY=(XDL+.9) /2
12200          LH=MDAY*2 -1
12300          OFFSET=MDAY-XDL/2.-.50
12400          DO 888 H=MDAY,LH
12500
12600
12700
12800
12900
13000
13100
13200
13300          XI(H)=DI(D)*PI*SIN(PI (H-OFFSET )/XDL)/XDL/2
13400          IF(XI(H).LE.0.) XI(H)=0.
13500          IF(XI(H).LT.35.) FPAR=.65-.0043*XI(H)
13600          IF(XI(H).GE.35.) FPAR=.5
13700          PAR(H)=FPAR*XI(H)
13800    C*** COMPUTE PHOTOSYNTHESIS & ROOT WATER EXTRACTION ***
13900          DO 470 J=1,3
14000      470 RWX(J)=RWX(J) + 2.*T(H)*TOTRES/ R(J)
14100          DO 777 L=1,LL
14200          XLI=XAF(L)*PAR(H)
14300          XP(H,L)=2./(PMAXR +1./GAMMA/XLI) *T(H)/TPOT(H)
14400          IF(L.EQ.LL) XP(H,L)=2.*XP(H,L)*(LAI+1.-LL)
14500      777 XDP=XDP+XP(H,L)
14600      888 XPDLL=XPDLL+XP(H,LL)
```

not considered in RICEMOD. Sensitivity to the water balance is achieved by multiplying the hourly unstressed photosynthesis by the ratio of actual transpiration divided by potential transpiration:

$$\text{Transpiration ratio} = \frac{T(H)}{TPOT(H)}. \qquad (2)$$

When actual transpiration equals potential transpiration, photosynthesis is not reduced. When actual transpiration falls below potential transpiration, there is a proportional reduction in photosynthesis (Yoshida and Shioya 1976).

Glossary

GAMMA = initial slope of the rectangular hyperbolic photosynthetic response curve (g CO_2 cal^{-1} 10^{-4}).

H = hour subscript, integer (h)

LAI = leaf area index (m^2 m^{-2})

LH = last daylight hour, integer (h)

LL = lowest layer of leaves, integer (l)

MDAY = midday daylight hour, integer (h)

OFFSET = the time between MDAY and ½ hour past solar noon, real (h)

PAR(H) = hourly photosynthetically active radiation (cal cm^{-2} h^{-1})

PMAXR = reciprocal of the maximum CO_2 fixation rate (m^2 h^{-1} g^{-1} CO_2). This value is proportional to the areal weight of nitrogen in the leaf blade.

T(H) = hourly actual transpiration rate (cm H_2O h^{-1} m^{-2}).

TPOT(H) = hourly PAR incident on a layer of leaves h^{-1} m^{-2}).

XAF(L) = light attenuation factor for leaf layer L (l).

XDL = photoperiod day length (h)

XLI = hourly PAR incedent on a layer of leaves (cal cm^{-2} h^{-1}).

XP(H,L) = CO_2 fixed by leaf layer L at hour H (g CO_2 m^{-2} h^{-1}).

XDP = daily total of CO_2 fixed by plant population (g CO_2 m^{-2} d^{-1}).

XPDLL = daily total of CO_2 fixed by lowest leaf layer (g CO_2 m^{-2} d^{-1}).

Soil parameters

To estimate the quantitative movement of soil water, physical properties which characterize the soil must be known or estimated. In RICEMOD, 3 equations represent the following soil-water relationships:

1. matric suction vs volumetric moisture content,
2. conductivity vs matric suction, and
3. diffusivity vs volumetric moisture content.

No accepted theory exists for predicting these relationships from basic soil properties because absorption and pore-geometry effects are often too complex to be described by a simple model (Hillel 1971).

The matric suction vs moisture content relationship is often represented by a curve called the *soil-moisture-retention curve* or the *soil-moisture characteristic*. A given soil will have a different soil-moisture characteristic depending on that soil's structure and whether measurements are taken during wetting (sorption) or drying (desorption). Tillage, soil structure changes caused by consolidation after tillage, and cracking of clays caused by drying are a few of the things that affect the soil moisture characteristic, making it difficult to model soil water movement.

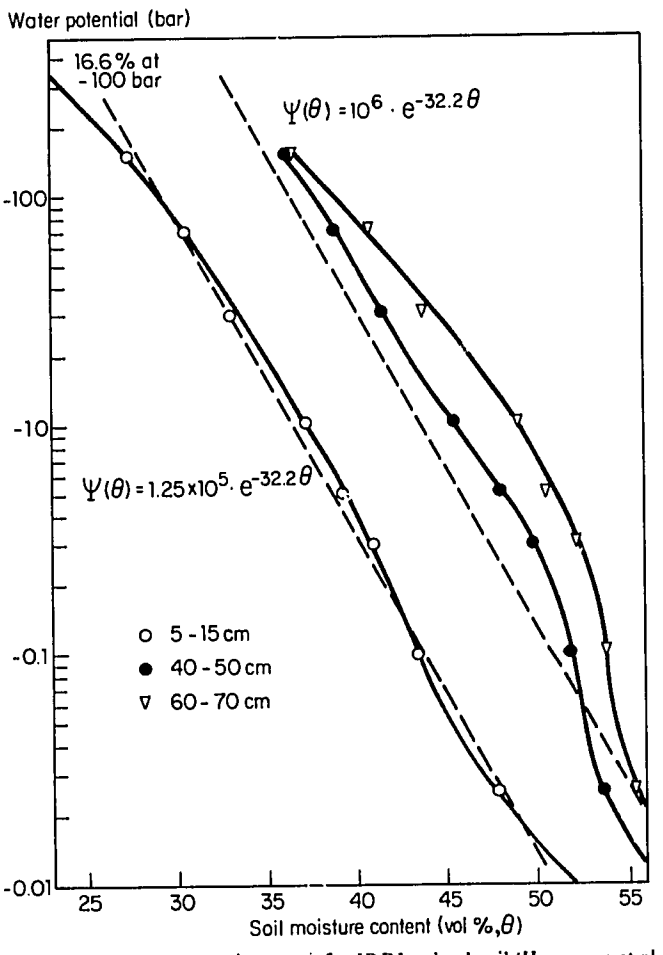

10. Soil moisture desorption curve for IRRI upland soil (Hasegawa et al 1979).

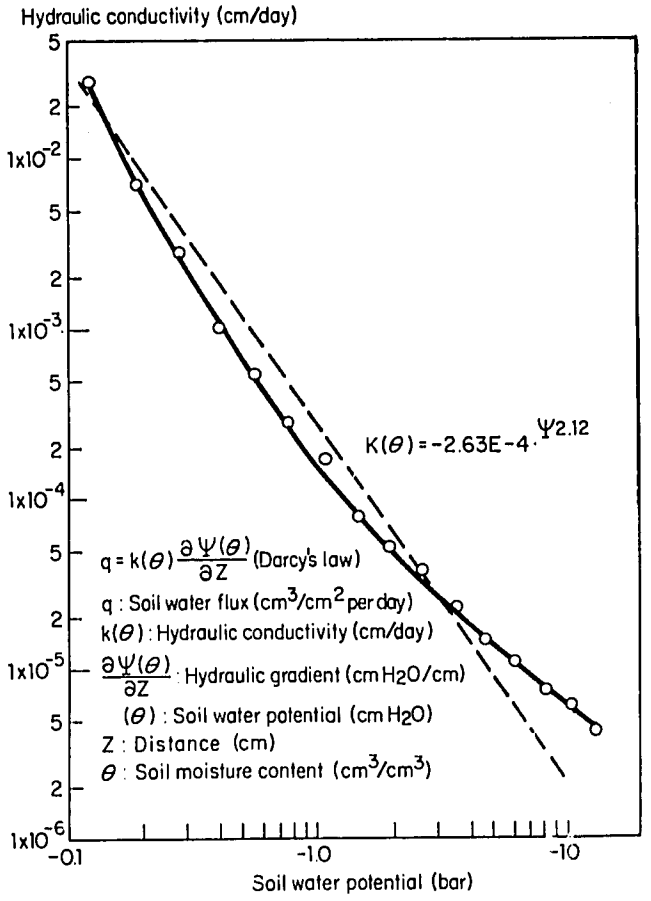

11. Hydraulic conductivity of IRRI upland soil at 5-15 cm depth (Hasegawa et al 1979).

Trial runs of RICEMOD were conducted using data from experiments at IRRI, Los Baños. Hasegawa et al (1979) measured soil moisture content vs soil water potential at IRRI in an aerobic dryland rice field characterized by a clay loam soil [typic Hapludoll] for three soil depths and a range of soil moistures to establish moisture characteristic curves (Fig. 10). For use in RICEMOD, these curves were fitted to exponential equations of the form:

$$MSUC(J) = ASCOEF(J) * e^{(BSCOEF * MC(J))} \quad (1)$$

The slope of each curve was equal so the B-coefficient, which determines the slope, was the same for all three equations.

Various empirical equations have been proposed for the relationship of conductivity to suction. One of the most commonly employed equations is:

$$KS(J) = \frac{a}{\psi^m}, \quad (2)$$

but it cannot be used as suction nears zero. Values of m range from 2 or less for clay soils to 4 or more for sandy soils (Hillel 1971).

Using Hasegawa's data equation, 2 was fitted to his curve in Figure 11 and the m exponent (BKCOEF in RICEMOD) is 2.12.

12

To avoid the suction range close to zero where unrealistic KS(J) values might occur, upper limits are imposed on equation 2 (see the flow chart and program lines 8700 to 8900.

Diffusivity is the ratio of hydraulic conductivity to specific water capacity, c (Θ), which is the slope of the soil-moisture curve.

$$DS(J) = \frac{KS(J)}{c(\Theta)} = KS(J) * \frac{d\Psi}{d\Theta}. \quad (3)$$

Diffusivity usually increases with wetness until it becomes indeterminate as the soil approaches saturation and wetness approaches zero. However, in the very dry range diffusivity may rise with decreased wetness, apparently because of vapor movement (Hillel 1971). In RICEMOD, diffusivity is used only to calculate soil evaporation. Inaccuracies at very wet or dry conditions are assumed to be of little consequence. Near saturation evaporation is controlled by evaporative demand and in very dry conditions evaporation is so small that even large errors represent small quantities.

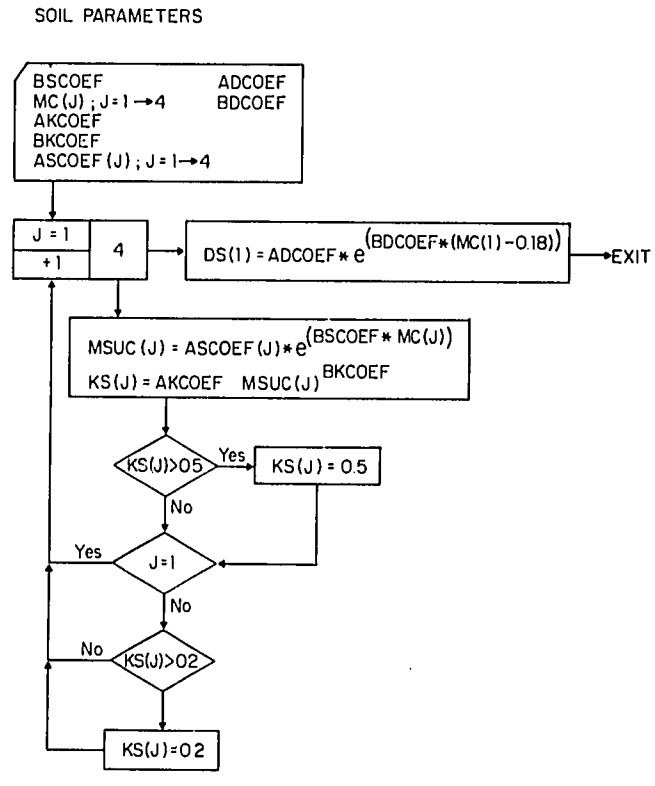


```
07900
08000
08100     C*** SOIL DIFFUSIVITY, MATRIC SUCTION & CONDUCTIVITY **
08200           DS(1)=ADCOEF*EXP(BDCOEK*(MC(1)-.18))
08300           DO 425 J=1,4
08400           RWX(J)=0.
08500           MSUC(J)=ASCOEF(J)*EXP(BSCOEF*MC(J))
08600           KS(J)   =AKCOEF*MSUC(J)**BKCOEF
08700           IF(KS(J).GT.0.5) KS(J)=0.5
08800           IF(J.EQ.1) GO TO 425
08900           IF(KS(J).GT.0.2) KS(J)=0.2
09000       425 CONTINUE
09100     C*** COMPUTE SPECIFIC LEAF WT. (G/M**2) AND LAI *******
09200
```

Passioura (1982) suggested that the relationship of diffusivity with matric suction is approximately independent of soil type and within a factor of 2 we can be confident that $D(\Psi) = 1\ cm^2\ d^{-1}$ when $\Psi = -15$ bar, $10\ cm^2\ d^{-1}$ at -1 bar, and $100\ cm^2\ d^{-1}$ at -0.1 bar. These three points fit the power function:

$$D(\Psi) = 11.32\ \Psi^{-.917}; \quad (4)$$

If the derivative of equation 1 is substituted in equation 3 we have:

$$DS(J) = KS(J) * [BSCOEF * ASCOEF * e^{(BSCOEF * MC(J))}], \text{ or}$$
$$= KS(J) * BSCOEF * MSUC(J) * 1000., \quad (5)$$

which is close to equation 4 when using coefficients derived from Hasegawa's data (see Fig. 12). The 1000 in equation 5 converts matric suction from bars to cm to calculate soil evaporation. The diffusivity equation needs to be in an exponential form so that coefficients *a* and *b* are available (see Soil Evaporation for an explanation):

$$D = D_0 * e^{ac}, \quad (6)$$

where D_0 = diffusivity of air dry soil, and
c = MC(1) − moisture content of air dry soil, Θ_0.

If we let $\Theta_0 = 0.18$ and use coefficients developed in equations 1, 2, and 5 we find:

$$MUSC_0 = -381.5 \text{ bars}$$
$$KS_0 = 9.015 \times 10^{-10}\ cm\ d^{-1}$$
$$D_0 = ADCOEF = .0111\ cm^2\ d^{-1}.$$

Using equation 6 at a soil moisture not equal Θ_0 we can evaluate *a*:

$$a = BDCOEF = 35.92$$

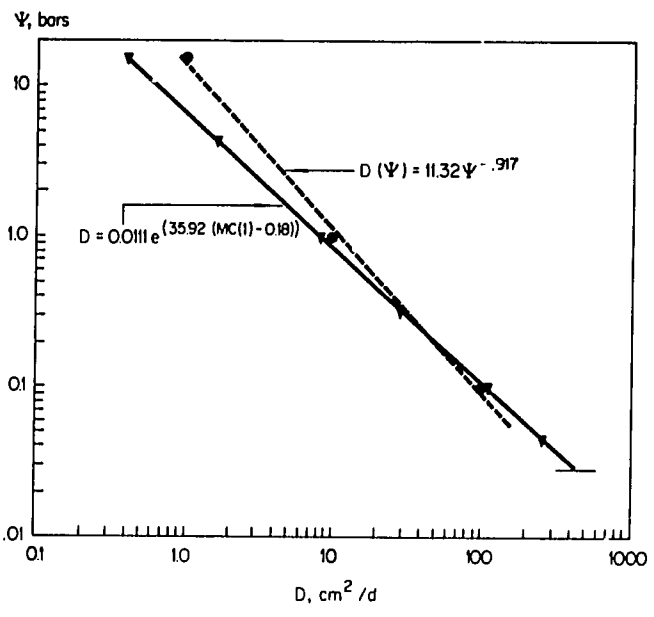

12. Relationship between soil matric (Ψ) and diffusivity (D). Adapted from Hasegawa et al 1979.

13

Equation 6 appears on program line 8200 as DS(1) = ADCOEF * EXP(BDCOEF * [M (1) −.18]) and gives values of DS(1) equal to within 1% of those obtained with equation 5.

The RICEMOD user should recognize the importance of soil physical properties. They are elusive because they change within fields and with time due to the effects of tillage, etc. Soil water movement is difficult to model because even slight changes in soil physical properties can result in significant changes in water flow. The exponential equations describing soil parameters used in RICEMOD are also sensitive to slight changes and this cannot be avoided without distorting the physical system the model represents. This sensitivity makes accurate determination of soil physical properties very important to RICEMOD's performance.

Glossary

ADCOEF = the A-coefficient in the exponential diffusivity equation.

AKCOEF = A-coefficient in the power conductivity equation.

ASCOEF(J) = the A-coefficient in the exponential matric suction equation for soil layer J, where J = 1 for the surface soil layer.

BDCOEF = the B-coefficient in the exponential diffusivity equation.

BKCOEF = the B-coefficient in power conductivity equation.

BSCOEF = the B-coefficient in the exponential matric suction.

DS(J) = diffusivity of soil layer J ($cm^2\ d^{-1}$).

KS(J) = conductivity of soil layer J ($cm\ d^{-1}$).

MC(J) = volumetric moisture content of soil layer J ($cm^3\ cm^{-3}$).

MSUC = matric suction of soil layer J (-bar).

Root water extraction

The rate of soil water extraction by the roots is assumed to obey Ohm's Law type relationship:

$$\text{Water flow rate} = \frac{\text{potential difference between soil and leaves}}{\text{resistance between soil and leaves}}.$$

In RICEMOD the soil is assumed to have 4 layers. The top 3 layers contain roots. The resistance term in the Ohm's Law relationship is the sum of resistance between the 3 root-bearing soil layers and the leaves. Since these resistances are parallel, the flow rate from a given soil layer is inversely proportional to that soil layer's resistance:

$$RWX(J) = TRANS * \frac{TOTRES}{R(J)}; \text{ (see line 14000).}$$

Transpiration should equal the sum of water extracted by all root-bearing layers, which can be checked by adding the RWX(J) terms together:

Root water extraction

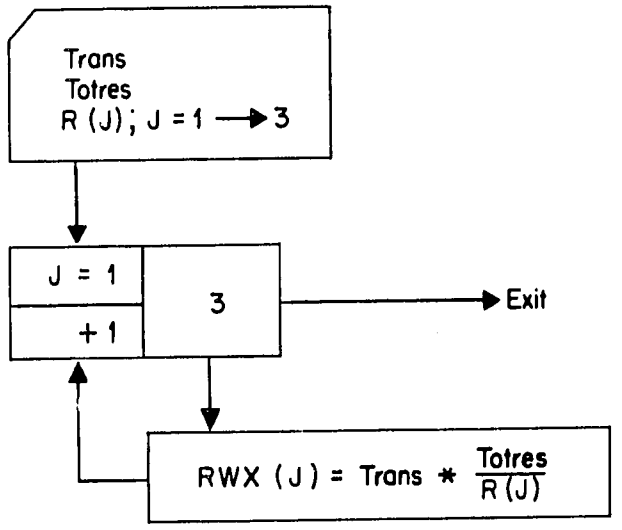


```
13800     C*** COMPUTE PHOTOSYNTHESIS & ROOT WATER EXTRACTION ***
13900           DO 470 J=1,3
14000       470 RWX(J)=RWX(J) + 2.*T(H)*TOTRES/ R(J)
```

$$RWX(1) + RWX(2) + RWX(3)$$
$$= TRANS\left[\frac{TOTRES}{R(1)} + \frac{TOTRES}{R(2)} + \frac{TOTRES}{R(3)}\right]$$
$$= TRANS * TOTRES\left[\frac{1}{R(1)} + \frac{1}{R(2)} + \frac{1}{R(3)}\right];$$

and since $\frac{1}{R(1)} + \frac{1}{R(2)} + \frac{1}{R(3)} = \frac{1}{TOTRES}$, so

Total root water extraction = TRANS.

Transpiration and total resistance (TOTRES) are calculated in the *Leaf Water Potential and Transpiration* routine. The R(J) terms are calculated in the *Soil to Leaf Resistance* routine.

Glossary

R(J) = resistance to water flow between the soil in layers J and the leaves ($bar\ h\ cm^{-1}$).

RWX(J) = water extracted from soil layer J by the roots ($cm\ H_2O\ d^{-1}$).

TOTRES = total resistance to water flow between all soil layers and the leaves ($bar\ h\ cm^{-1}$).

TRANS = actual daily transpiration ($cm\ H_2O\ d^{-1}$).

Soil water balance

The soil water balance routine updates the soil moisture content of the top 3 soil layers at the end of each day. In this version of RICEMOD, the fourth layer has a constant moisture content, although it could fluctuate to simulate a rising or falling water table.

The moisture content of root-bearing layers is reduced by root water extraction. Water flow (flux) from adjacent soil layers also can cause net increase or decrease in each

layer's moisture content. The surface soil layer can lose moisture by evaporation and gain moisture from rainfall and irrigation (Fig. 13).

If the calculated moisture content of the surface soil layer exceeds saturation it is assumed that the surface layer is at saturation and the excess moisture is ponded on the surface (see lines 17000 to 17300).

Flow between layers, soil evaporation, and root water extraction are expressed in cm of water so these values must be divided by the soil layer thickness to get moisture content which has units of cm^3 water cm^{-3} soil.

If soil layers are not of equal thickness, the user may use the distance between soil layers rather than soil layer thickness in the FLUX and MC(J) equations. If layer thickness varies 25% or less this is not necessary because the error affects only the daily moisture content change, which is normally small. Also, the distance error is only 1/2 the thickness difference.

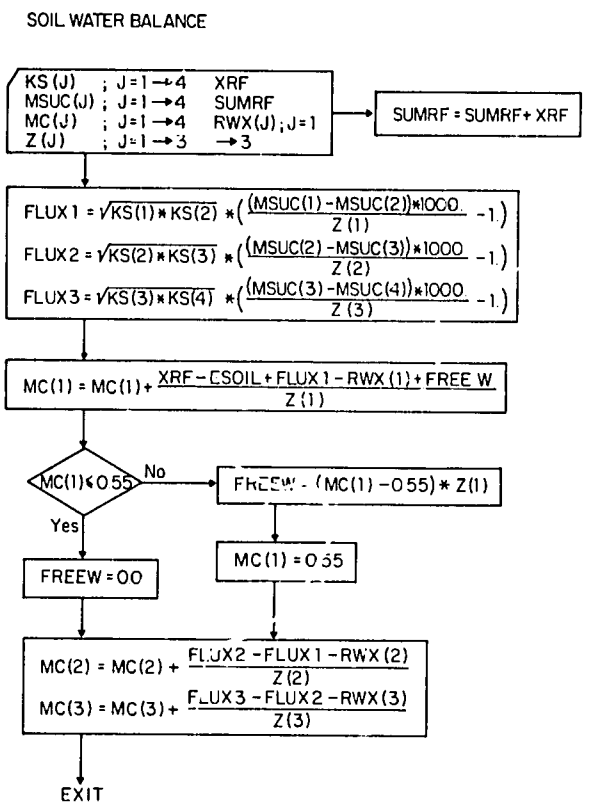


```
15800
15900          PRBAL=PMRLL(1)+PMRLL(2)+PMRLL(3)
16000    C*** COMPUTE SOIL MOISTURE AT END OF DAY **************
16100          XRF=RF(D)/100
16200          SUMRF=SUMRF+XRF
16300          FLUX1=SQRT(KS(1)*KS(2))*((MSUC(1)-MSUC(2))/Z(1)
16400         * *1000. -1.)
16500          FLUX2=SQRT(KS(2)*KS(3))*((MSUC(2)-MSUC(3))/Z(2)
16600         * *1000. -1.)
16700          FLUX3=SQRT(KS(3)*KS(4))*((MSUC(3)-MSUC(4))/Z(3)
16800         * *1000. -1.)
16900          MC(1)=MC(1)+(XRF-ESOIL+FLUX1-RWX(1)+FREEW/Z(1)
17000          IF(MC(1).LE..55) FREEW=.0
17100          IF(MC(1).LE.0.55) GO TO 480
17200          FREEW= (MC(1)-.55)*Z(1)
17300          MC(1)= .55
17400      480 MC(2)=MC(2)+(FLUX2-FLUX1-RWX(2))/Z(2)
17500          MC(3)=MC(3)+(FLUX3-FLUX2-RWX(3))/Z(3)
17600    C*** COMPUTE P.I. & FLOWERING DELAY DUE TO STRESS *****
17700          IF(D.NE.IX(5)) GO TO 520
17800
```

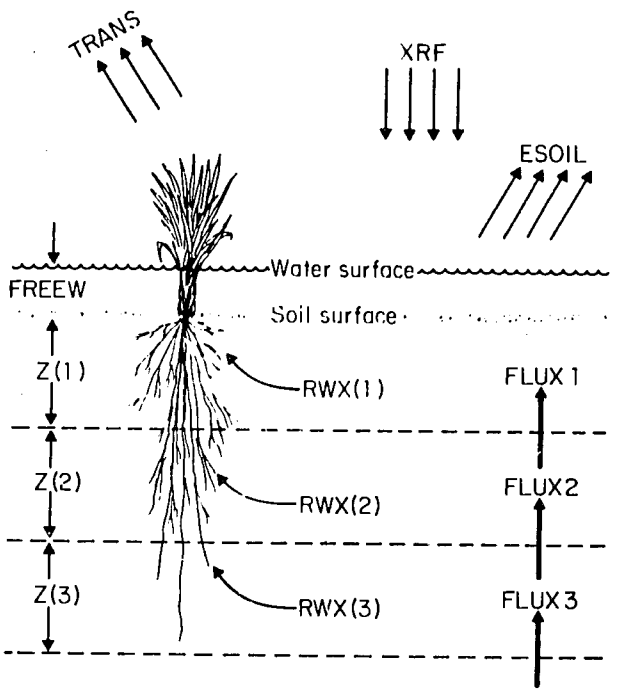

13. Water movement in RICEMOD.

Flow between layers (flux) is assumed to obey a modified form of Darcy's Law:

$$q = K(\Theta)\,\Delta H$$

q is flow, $K(\Theta)$ is conductivity as a function of volumetric moisture content, and ΔH is the hydraulic head gradient which includes gravimetric and suction components. Assuming that lateral flow is negligible relative to vertical flow, the equation for one-dimensional flow is written (Hillel 1971):

$$q_i = -K(\Theta)_{AV.}\,\frac{\Psi_i - \Psi_{i+1} - \Delta Z}{\Delta Z}, \text{ or}$$

$$q_i = -K(\Theta)_{AV.}\left(\frac{\Psi_i - \Psi_{i+1}}{\Delta Z} - 1\right); \text{ where}$$

ΔZ is the distance between the points where the matric suctions (Ψ_i and Ψ_{i+1}) are measured. For example, in RICEMOD this equation for the first soil layer is written on line 16300 as follows:

$$\text{FLUX1} = \text{SQRT}[\,KS(1).*KS(2)]\,\frac{MSC\ U(1) - MSC\ U(2)}{Z(1)} * 1000. - 1$$

Matric suction is multiplied by 1000 to convert the units from bars to cm. FLUX is positive for upward flow and negative for downward flow.

Due to the exponential nature of conductivity, average conductivity is computed as:

$$K(\Theta) = e^{\frac{\log_e KS(1) + \log_e KS(2)}{2.0}} = \sqrt{KS(1) * KS(2)}$$

If the mean value of K(Θ) is used, flow will be greatly overestimated, especially if the suction gradient is large (Brinkman, pers. comm. 1981).

To keep track of the total irrigation water and rainfall applied to the crop, a summation of these daily values called SUMRF is maintained (see lines 16100 and 16200).

Soil evaporation is estimated in the *Soil evaporation* routine. Soil conductivity and matric suction are also estimated in *Soil parameters*.

Glossary

ESOIL = actual soil evaporation rate (cm d^{-1}).
FLUX1 = soil water flux from soil layer 2 to 1 (cm d^{-1}).
FLUX2 = soil water flux from soil layer 3 to 2 (cm d^{-1}).
FLUX3 = soil water flux from soil layer 4 to 3 (cm d^{-1}).
FREEW = paddy water depth (cm).
KS(J) = conductivity of soil in layer J (cm H_2O d^{-1}).
MC(J) = volumetric moisture content of soil layer J (cm^3 cm^{-3}).
MSUC(J) = matric suction of soil layer J (−bar).
RWX(J) = water extracted from soil layer J by the roots (cm d^{-1}).
SUMRF = total rainfall and irrigation (cm).
XRF = daily rainfall plus irrigation (cm).
Z(J) = depth or thickness of soil layer J (cm).

Leaf water potential and transpiration

For each soil layer, an Ohm's Law type equation can be written for water flow from the soil to the leaf canopy:

$$RWX(i) = \frac{LWPOT - MSUC(i)}{RS(i) + RP(i)} \qquad (1)$$

where RWX(i) is the water extracted by the roots from soil layer i, MSUC(i) is the matric suction of soil layer i, LWPOT(H) is the nominal leaf water potential of the plant population, RS(i) is the resistance to water flow between the soil and root xylem in layer i, and RP(i) is the resistance between roots in layer i and the leaf canopy.

In Root Water Extraction it was pointed out that transpiration (TRANS) equals the summation of all RWX(i) term, so that for a 3-layer model we have:

$$TRANS = \frac{LWPOT - MSUC(1)}{RS(1) + RP(1)} + \frac{LWPOT - MSUC(2)}{RS(2) + RP(2)} + \frac{LWPOT - MSUC(3)}{RS(3) + RP(3)} \qquad (2)$$

Soil to leaf resistance [RS(i) + RP(i)] is calculated in a separate routine and combined into one daily resistance term for each soil layer, denoted as R(i). Substituting R(i) and separating variables we get:

LEAF WATER POTENTIAL AND TRANSPIRATION

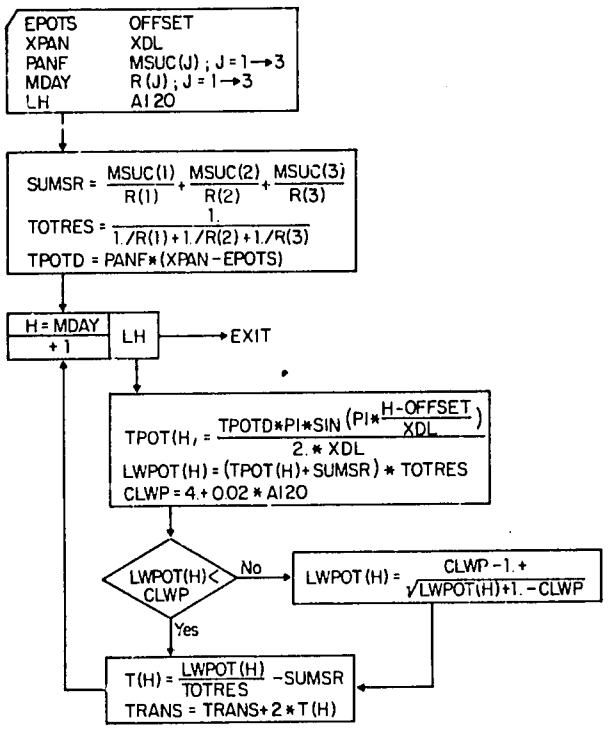


```
10700      453 CONTINUE
10800    C*** COMPUTE SOIL WATER RESISTANCE ******************
10900
11000
11100
11200          SUMSR=MSUC(1)/R(1)+MSUC(2)/R(2)+MSUC(3)/R(3)
11300          TOTRES=1./(1./R(1) + 1./R(2) + 1./R(3))
11400
11500
11600
11700
11800
11900    C*** COMPUTE HOURLY TOT. RAD., PAR & TRANSPIRATION ****
12000          TPOTD=PANF* (XPAN-EPOTS)
12100          MDAY=(XDL+.9) /2
12200          LH=MDAY*2 -1
12300          OFFSET=MDAY-XDL/2.-.50
12400          DO 888 H=MDAY,LH
12500          TPOT(H)=TPOTD*PI**SIN(PI*(H-OFFSET)/XDL)/XDL/2.
12600          LWPOT(H)=(TPOT(H)+SUMSR) * TOTRES
12700          CLWP=4.+.02*AI20
12800          IF (LWPOT(H).LT.CLWP) GO TO 465
12900          LWPOT(H)=CLWP-1.+ SQRT(LWPOT(H)+1.-CLWP)
13000          IF(H.EQ.MDAY)  SUMSD=SUMSD+1
13100      465 T(H)= LWPOT(H)/TOTRES -SUMSR
13200          TRANS=TRANS + 2.*T(H)
13300
13400
13500
13600
13700
13800
13900
14000
14100          DO 777 L=1,LL
14200          XLI=XAF(L)*PAR(H)
14300          XP(H,L)=2./(PMAXR +1./GAMMA/XLI) *T(H)/TPOT(H)
14400          IF(L.EQ.LL) XP(H,L)=2.*XP(H,L)*(LAI+1.-LL)
14500      777 XDP=XDP+XP(H,L)
14600      888 XPDLL=XPDLL+XP(H,LL)
14700    COMPUTE GROWTH RESP. (RG) AND MAINT. RESP. RATE
```

$$TRANS = LWPOT\left[\frac{1}{R(1)} + \frac{1}{R(2)} + \frac{1}{R(3)}\right] - \left[\frac{MSUC(1)}{R(1)} + \frac{MSUC(2)}{R(2)} + \frac{MSUC(3)}{(R(3)}\right] \qquad (3)$$

16

Since the resistances for each layer are parallel, the summation of 1/R(i) terms equals the reciprocal of total soil to leaf resistance. Also, because MSUC(i) and R(i) are daily values, they are computed outside the hour — loop and aggregated into a term called SUMSR; so that:

$$T(H) = \frac{LWPOT(H)}{TOTRES} - SUMSR\,. \qquad (4)$$

If evaporative demand by the leaves [TPOT(H)] is known, then equation 4 can be rearranged to find the leaf water potential required to meet that demand:

$$LWPOT(H) = [TPOT(H) + SUMSR] * TOTRES\,. \qquad (5)$$

In RICEMOD critical leaf water potential is used to indicate leaf water stress. When the absolute value of leaf water potential (equation 5, program line 12600) exceeds a seasonally predetermined value, a stress condition exists. Critical leaf water potential is the water status of leaves at which gas exchange (CO_2 and H_2O) is initially perturbed. At this point the pressure potential is near zero, such that $\Psi_{leaf} = \Psi_{press} + \Psi_{osmotic}$ becomes $\Psi_{leaf} = \Psi_{osmotic}$.

In Figure 14, turgid osmotic potential is shown to be a function of crop solar radiation history. RICEMOD uses this function with a decrease in the intercept (−1.6 to −4.0) to determine critical leaf water potential.

As a result of the stress condition, leaf water potential required to meet demand cannot be maintained. In stressed plants, stomatal closure or leaf rolling reduces transpiration through increased resistance. In the model, leaf water potential is attenuated to accomplish the same effect without recalculating TOTRES and SUMSR.

Referring to the flow chart, the user will see that daily SUMSR, TOTRES, and TPOTD values are calculated using variables computed in other routines before entering the hour — loop. Upon entering the hour — loop, hourly evaporative demand is calculated. The equation for TPOT(H) (line 12500) is essentially the same as that used to estimate hourly radiation from a daily value. Part I describes the technique used. LWPOT(H) is estimated using equation 5. If LWPOT(H) is below the stress limit it is used to calculate the hourly transpiration; otherwise it is attenuated first.

TRANS is actual daily transpiration or the summation of all hourly values. Since radiation, transpiration, and photosynthesis are symmetric about solar noon in RICEMOD, these values are computed only from noon to sunset, but are doubled when summing to get daily values.

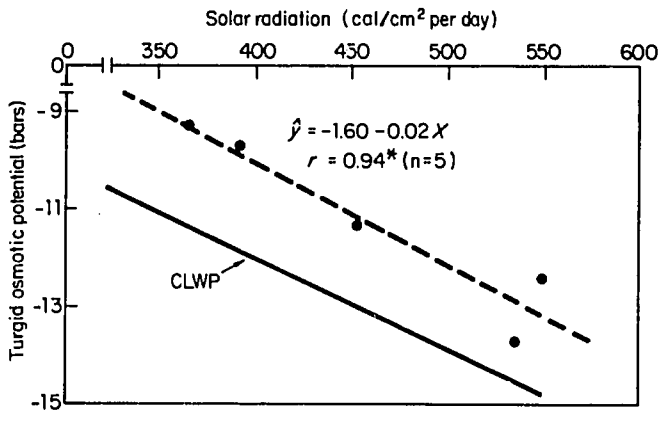

14. Effect of mean solar radiation 20 days before determination of turgid osmotic potential of rice leaves.

Glossary

EPOTS	= potential soil evaporation rate, i.e. the evaporation rate of saturated soil (cm H_2O m^{-2} d^{-1})
LH	= last daylight hour, integer (h)
LWPOT(H)	= leaf water potential at hour H(−bar).
CLWP	= critical leaf water potential (−bar).
MDAY	= midday daylight hour, integer (h)
MSUC(J)	= matric suction of soil layer J (−bar).
OFFSET	= the time between MDAY and 1/2 hour past solar noon, real (h).
PANF	= crop factor or pan factor (1).
PI	= 3.1416
R(J)	= resistance to water flow between the soil in layer J and the leaves (bar h cm^{-1}).
SUMSR	= summation of matric suction/resistance terms for all soil layers (cm H_2O h^{-1}).
T(H)	= actual transpiration at hour H (cm H_2O h^{-1}).
TPOT(H)	= unstressed or potential transpiration at hour H (cm H_2O h^{-1}).
TPOTD	= daily potential transpiration rate (cm H_2O d^{-1}).
TOTRES	= total resistance to water flow between all soil layers and the leaves, i.e. the parallel summation of all R(J) terms (bar h cm^{-1}).
TRANS	= actual daily transpiration (cm H_2O d^{-1}).
XDL	= photoperiod day length (h).
XPAN	= daily class "A" pan evaporation (cm d^{-1}).

Soil to leaf resistance

Soil to leaf resistance can be broken down into at least 4 resistances:

1. Bulk soil to soil-root interface,
2. Soil-root interface to root xylem (through the cortex),
3. Axial resistance within the root from point of water extraction to base of the stem, and
4. Axial resistance from the stem base, through the stem and to the leaf blade.

In RICEMOD, resistance from the soil to leaf is lumped into 2 resistances. The soil to root xylem resistance, RS, is calculated using a relationship developed by Gardner (1960):

$$r_h - r_r = \frac{q}{4 * PI * KS(J)} \log_e \left[\frac{b^2}{RDS}\right]; \qquad (1)$$

17

Soil to leaf resistance

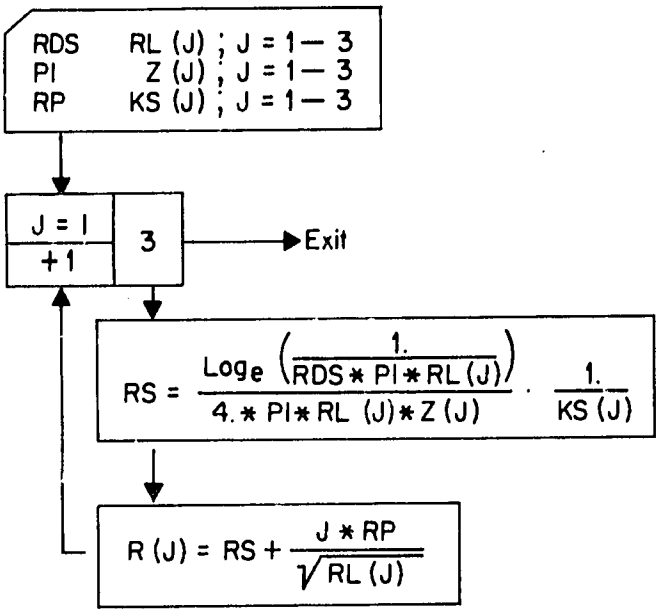


```
10500
10600
10700
10800   C*** COMPUTE SOIL WATER RESISTANCE ******************
10900         DO 460 J=1,3
11000         RS=ALOG(1./RDS/PI/RL(J))/4./PI/RL(J)/Z(J)/KS(J)
11100     460 R(J)=RS + RP*J/SQRT(RL(J))
11200         SUMSR=MSUC(1)/R(1)+MSUC(2)/R(2)+MSUC(3)/R(3)
11300         TOTRES=1./(1./R(1) + 1./R(2) + 1./R(3))
11400   C*** COMPUTE NITROGEN/LEAF AREA **********************
11500
11600
11700
```

where τ_r and τ_b are the matric potentials at the root surface and at a distance b from the root, respectively. The water flow rate is q.

Newman (1969) suggests letting b equal half the distance between roots:

$$b = \frac{1}{\sqrt{PI * RL(J)}}. \tag{2}$$

If we let resistance per root equal $(\tau_b - \tau_r)/q$ and substitute for b, we can write Gardner's equation:

$$\text{Resistance per root} = \frac{\log_e b^2 - \log_e RDS}{4. * PI * KS(J)}, \text{ or} \tag{3}$$

$$\text{Resistance per root} = \frac{\log_e (PI * RL(J)) - \log_e RDS}{4. * PI * KS(J)}, \tag{4}$$

$$= \frac{\log_e \left[\frac{1}{PI * RL(J) * RDS}\right]}{4. * PI * KS(J)}.$$

RICEMOD uses soil root resistance per soil layer. In a unit depth of soil with RL(J) roots, equation 4 can be divided by RL(J) to get resistance per unit depth (assuming that the single root resistances are parallel). In a similar manner, resistance for a soil layer is found by dividing by the layer's thickness, Z(J):

$$RS = \frac{\log_e \left[\frac{1}{PI * RL(J) * RDS}\right]}{4. * PI * RL(J) * Z(J) * KS(J)}. \tag{5}$$

The resistance from root to leaf blade is assumed to be proportional to the square of the root depth and inversely proportional to the square root of root density:

$$\text{Resistance per unit of soil} = \frac{Z * RP}{\sqrt{RL(J)}} \tag{6}$$

where Z = depth of soil unit.

If resistance from stem base to leaf blade about equals the average axial resistance in the top soil layer and each soil layer is about the same thickness then we can express the resistance to a soil unit at the center of any soil layer as:

$$\text{Resistance per unit of soil from soil to leaves} = \frac{[{}^1/_2 RP + (J - {}^1/_2) RP] * Z(J)}{\sqrt{RL(J)}}, \text{ or} \tag{7}$$

$$= \frac{J * RP * Z(J)}{\sqrt{RL(J)}}.$$

Summing the parallel resistance for all soil units in a soil layer eliminates the Z(J) term.

Adding soil to root resistance and the axial resistance term we have:

$$R(J) = RS + \frac{J * RP}{\sqrt{RL(J)}}.$$

which is the equation on line 11100.

Glossary

KS(J) = conductivity of soil in layer J (cm H_2O d^{-1}).
PI = 3.1416
R(J) = resistance to water flow between the soil in layer J and the leaves (bar h cm^{-1}).
RDS = root diameter squared (cm^2).
RL(J) = root length density in soil layer J (cm cm^{-3}).
RP = coefficient for axial root resistance (—bar h cm^{-3}).
RS = resistance to water flow between the soil and root xylem (—bar h cm^{-1}).

Soil evaporation

It is assumed that soil evaporation occurs in two stages. In stage 1, the constant rate stage,soil is sufficiently wet for water to be transported to the surface at a rate at least equal to evaporative potential. In stage 2, the falling rate stage, soil evaporation depends on the flux of water through the upper soil layer (Ritchie 1972).

In RICEMOD, the condition at which stage 1 ends and stage 2 begins is evaluated using equations developed by Gardner and Hillel (1962). Their equation for determining total soil water content, W, at which stage 2 evaporation begins is:

18

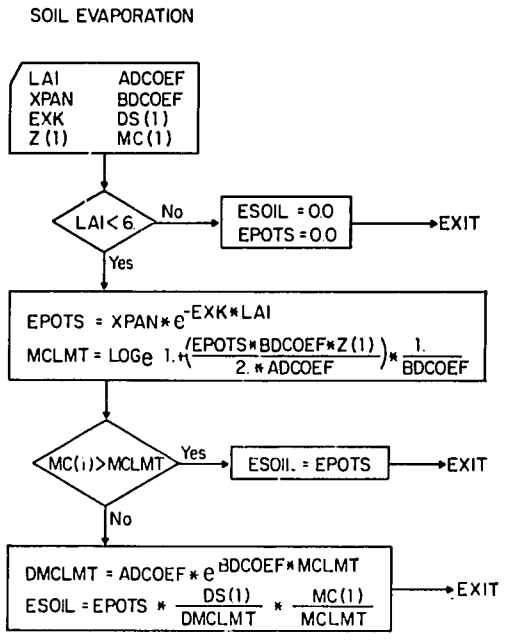


```
09500   C**** COMPUTE SOIL EVAPORATION ***********************
09600         IF (LAI-6.) 450,452,452
09700     450 EPOTS=XPAN*EXP(-1*EXK*LAI)
09800         MCLMT=ALOG(1+EPOTS*BDCOEF*Z(1)/2/ADCOEF)/BDCOEF
09900         IF(MC(1).GE.MCLMT) GOTO 451
10000         DMCLMT=ADCOEF*EXP(BDCOEF*MCLMT)
10100         ESOIL=EPOTS*DS(1)/DMCLMT
10200         GOTO 453
10300     451 ESOIL=EPOTS
10400         GOTO 453
10500     452 ESOIL=0.0
10600         EPOTS=0.0
10700     453 CONTINUE
```

$$W = \frac{L}{BDCOEF} * \log_e \left(1. + \frac{EPOTS * BDCOEF * L}{2. * ADCOEF}\right), \quad (1)$$

where L = depth of wetted soil.

If we let L equal Z(1) then MC(1) can replace W/L, and we have:

$$MCLMT = \frac{1.}{BDCOEF} * \log_e \left(1. + \frac{EPOTS * BDCOEF * Z(1)}{2. * ADCOEF}\right). \quad (2)$$

To see how ADCOEF and BDCOEF are evaluated, the user should refer to *Soil parameters*.

Gardner and Hillel's equation for stage 2 soil evaporation, written in RICEMOD terms, is:

$$ESOIL = DS(1) * \frac{W^2}{4 * L^2} \quad . \quad (3)$$

Again, letting L = Z(1) and replacing W/L with MC(1) we have:

$$ESOIL = DS(1) * MC(1) * \frac{\pi^2}{4 * Z(1)} \quad . \quad (4)$$

When soil moisture equals MCLMT, the last term in equation 4 can be evaluated:

$$\frac{\pi}{4 * Z(1)} = \frac{EPOTS}{DMCLMT * MCLMT} \quad (5)$$

and substituted in equation 4 to give:

$$ESOIL = EPOTS * \frac{DS(1)}{DMCLMT} * \frac{MC(1)}{MCLMT} . \quad (6)$$

Potential soil evaporation, EPOTS, is assumed to equal pan evaporation when there is no crop cover. When LAI equals 6 the fraction of total radiation reaching the soil is less than 2%, and ESOIL is set at zero for LAI's equal or greater than 6. For crop cover with LAI less than 6, potential soil evaporation is assumed to be proportional to pan evaporation and the fraction of total solar radiation not intercepted by the canopy:

$$EPOTS = XPAN * e^{-EXK * LAI}, \quad (7)$$

where $e^{-EXK * LAI}$ = light transmission ratio.

Light transmission ratio is the ratio of total radiation at ground level to radiation at the top of the leaf canopy (Tanaka et al 1966).

The RICEMOD soil evaporation model gives results similar to Ritchie's (1972) model in that cumulative evaporation over an extended period of uniform conditions is somewhat linearly related to the square root of time (Fig. 15). In tropical rice growing areas, evaporative demand can vary greatly over a few days and the RICEMOD approach may offer some advantage for these conditions.

Referring to Figure 15, notice that for one soil the slope (the α *constant* in Ritchie's model) varies with evaporative condition. Also, the transition point between stage 1 and stage 2 evaporation is equally sensitive to evaporative conditions.

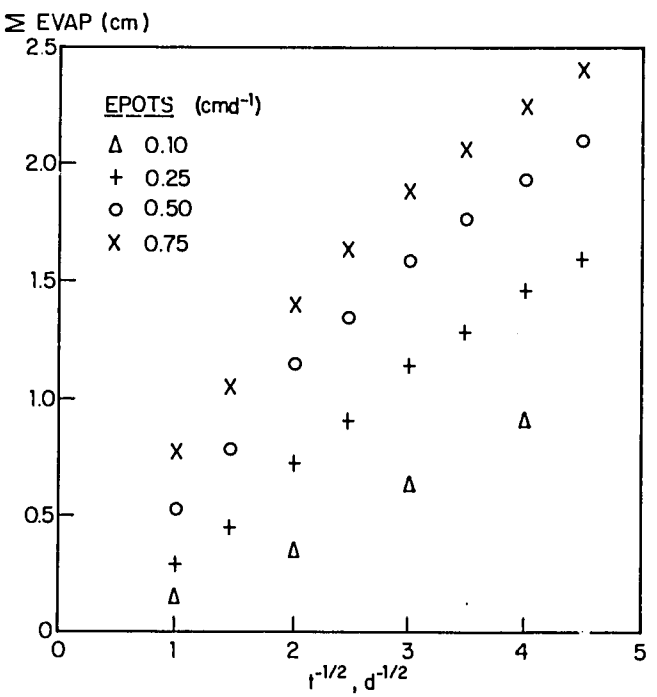

15. Cumulative soil evaporation as related to the square root of time for four evaporative conditions. All values are computed.

19

Glossary

ADCOEF = the A-coefficient used in the exponential diffusivity equation, where diffusivity is a function of volumetric water content of the soil.

BDCOEF = the B-coefficient used in the exponential diffusivity equation.

DMCLMT = diffusivity of the surface layer when its volumetric moisture content equals the lower limit for potential evaporation ($cm^2\ d^{-1}$).

DS(1) = diffusivity of the surface soil layer ($cm^2\ d^{-1}$).

EPOTS = potential soil evaporation rate, i.e. the soil drying rate which depends only on evaporative conditions — also called the first stage drying rate (cm $H_2O\ d^{-1}$).

ESOIL = actual soil evaporation rate (cm $H_2O\ d^{-1}$).

EXK = extinction coefficient, defined as:

$$EXK = -\log_e (LTR)/LAI;$$

where LAI is the leaf area index and LTR is the light transmission ratio or total radiation level at ground level divided by the radiation at the top of the leaf canopy.

LAI = leaf area index ($m^2\ m^{-2}$).

MC(1) = volumetric moisture content of the surface soil layer ($cm^3\ cm^{-3}$).

MCLMT = moisture content limit. The volumetric moisture content of the surface soil layer at which first stage drying ends and second stage (falling rate stage) of drying begins ($cm^3\ cm^{-3}$).

Panicle initiation and flowering delay

When subjected to water stress, many rice cultivars exhibit a delay in phenological events. The delay period is correlated with stress period duration, but stress appears to only retard the development rate, not stop development.

In IR36, the IRRI variety used for RICEMOD validation, panicle initiation and flowering are delayed about 1 day for every 3 days of water stress. After flowering, water stress does not appear to delay development rate. This rule of thumb is based on very limited data and needs refinement. Nevertheless, the stress-related delay phenomena is too important to ignore and has been included in RICEMOD.

In RICEMOD, a water stress condition exists when midday leaf water potential falls below a seasonally adjusted critical value. *Leaf water potential and transpiration* explains how midday leaf water potential and critical leaf water potential are determined.

A running balance or summation of stress days, SUMSD, is kept until the crop reaches panicle initiation, when the delay is computed and the stress day counter is reset to zero. If there are sufficient stress days accumulated

PANICLE INITIATION AND FLOWERING DELAY DUE TO STRESS

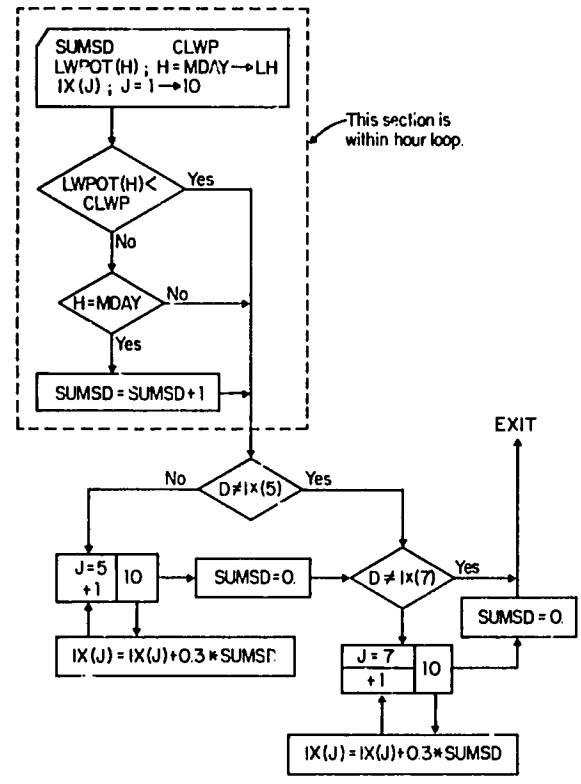


```
      CLWP=4.+.02*AI20
      IF (LWPOT(H).LT.CLWP) GO TO 465
      LWPOT(H)=CLWP-1.+ SQRT(LWPOT(H)+1.-CLWP)
      IF(H.EQ.MDAY)  SUMSD=SUMSD+1
  465 T(H)= LWPOT(H)/TOTRES -SUMSR
C*** COMPUTE P.I. & FLOWERING DELAY DUE TO STRESS *****
      IF(D.NE.IX(5)) GO TO 520
      DO 510 J=5,10
  510 IX(J)=IX(J)+ .3*SUMSD
```

20

```
18000          SUMSD=0.
18100      520 IF(D.NE.IX(7)) GO TO 501
18200          DO 530 J=7,10
18300      530 IX(J)=IX(J)+ .3*SUMSD
18400          SUMSD=.0
18500    COMPUTE PARTITIONING OF PHOTOSYNTHATE
18600      501 DO 440 J=2,10
```

to cause a delay, the delay is added to the panicle initiation age [IX (5)] and all plant age values in the partitioning rules table after panicle initiation. If there is a long stress period before the initial panicle initiation age and again before the adjusted panicle initiation age, the process can repeat itself.

After panicle initiation is reached the stress day counter totals stress days until flowering, when the delay is again computed as before and added to the flowering age plus all ages in the partitioning rules table after flowering. Once plant age exceeds the flowering age [IX (7)], the stress day counter continues, but the time span between flowering and maturity is not altered, in fact, it is the same as in the original partitioning rules table, because each time delays were added they simply shifted all the ages from flowering on [IX (7) → IX (10)] in a uniform way.

Glossary

CLWP = critical leaf water potential (−bars).

D = plant age (d).

IX(J) = plant age coordinates in the partitioning rules table (d).

- IX(5) = panicle initiation
- IX(7) = flowering
- IX(10) = harvest

LWPOT(H) = leaf water potential at hour H (−bar), where:

- H = 0 at sunrise,
- H = MDAY at 1/2 hour past solar noon,
- H = LH during the last daylight hour.

SUMSD = summation of stress days (d). In RICEMOD a stress day occurs whenever LWPOT(MDAY) equals or is less than CLWP.

Partitioning of photosynthate

The partitioning method described in Part I was modified for use in this RICEMOD 300 version. The vegetative phase model which utilized an *architectural standard* was abandoned and replaced with an extension of the *distribution factor* concept. Consequently, the *partitioning rules table* was extended into the vegetative growth period so that there are 10 IX(J) values, where:

- IX(1) = emergence, plant age zero,
- IX(5) = panicle initiation age,
- IX(7) = flowering age, and
- IX(10) = maturity or harvest age.

The procedure for responding to mutual shading of the lower leaves was also changed. Rather than shifting leaf weight to the stems, the partitioning factors in the tables are adjusted (see the flow chart and program lines 18000 to 18200).

Hsiao et al (1980) and Zur and Jones (1981) found that the water status of plants affects expansive growth. To allow

PARTITIONING OF PHOTOSYNTHATE

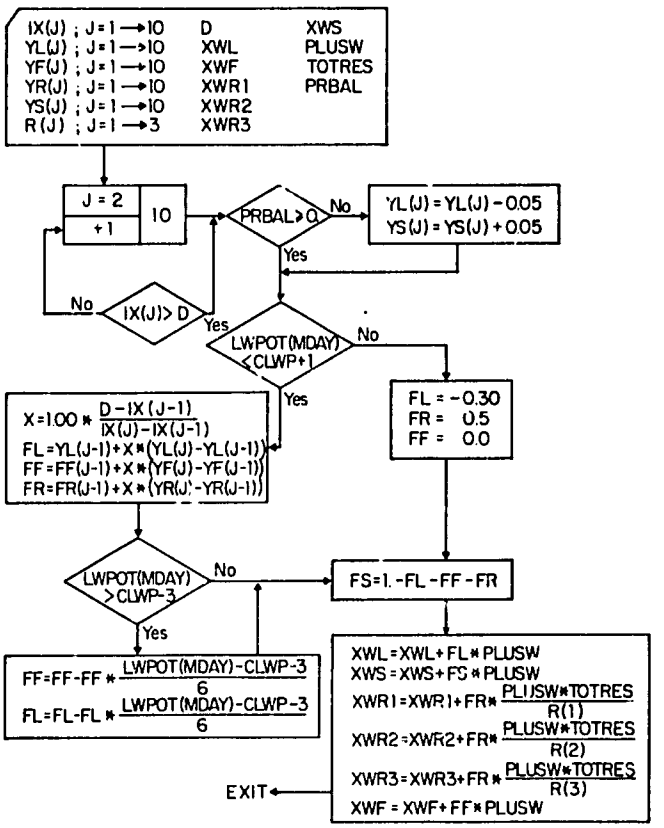


```
18500    COMPUTE PARTITIONING OF PHOTOSYNTHATE
18600      501 DO 440 J=2,10
18700          IF(IX(J).GE.D) GO TO 405
18800      440 CONTINUE
18900    C*** CHECK FOR UNPRODUCTIVE LOWEST LAYER OF LEAVES ****
19000      405 IF (PRBAL.GE.0.) GO TO 400
19100          YL(J)=YL(J)-.05
19200          YS(J)=YS(J)-.05
19300      400 IF(LWPOT(MDAY).LT.CLWP+1.) GO TO 410
19400          IF(D.GT.(IX(6)+5)) GO TO 410
19500          FL=0.0
19600          FR=0.5
19700          FF=0.0
19800          GO TO 420
19900      410 X=1.00*(D-IX(J-1))/(IX(J)-IX(J-1))
20000          FL=YL(J-1) +X *(YL(J)-YL(J-1))
20100          FF=YF(J-1) +X *(YF(J)-YF(J-1))
20200          FR=YR(J-1) +X *(YR(J)-YR(J-1))
20300          IF(LWPOT(MDAY).GT.CLWP-3)FF=FF-FF*(LWPOT(MDAY)
20400         1 -(CLWP-3.))/6.
20500          IF(LWPOT(MDAY).GT.CLWP-3)FL-FL-FL*(LWPOT(MDAY)
20600         1 -(CLWP-3.))/6.
20700      420 FS=1.- FL-FF-FR
20800          XWL=XWL +FL*PLUSW
20900          XWS=XWS +FS*PLUSW
21000          XWR1=XWR1+FR*PLUSW*TOTRES/R(1)
21100          XWR2=XWR2+FR*PLUSW*TOTRES/R(2)
21200          XWR3=XWR3+FR*PLUSW*TOTRES/R(3)
21300          XWF=XWF +FF*PLUSW
21400      504 XWL=XWL*RMF**2
21500          XWS=XWS*RMF
21600          XWR1=XWR1*RMF
21700          XWR2=XWR2*RMF
21800          XWR3=XWR3*RMF
21900          XWF=XWF*RMF**2
22000          XW=XWL+XWS+XWR1+XWR2+XWR3+XWF
22100          JD=D-5 *D/5)
22200
```

21

for this effect, RICEMOD begins attenuating leaf and panicle growth when midday leaf water potential approaches within 3 bars of the critical leaf water potential (see program lines 20300 to 20600). *Leaf water potential and transpiration* explains how midday and critical leaf water potentials are determined.

When the absolute value of midday leaf water potential exceeds the critical leaf water potential by 1 bar, panicle growth is stopped and the leaf growth factor shifts to −0.3 which will mimic leaf senescence during a severe stress situation (Fig. 16).

Glossary

CLWP	= critical leaf water potential (−bars).
D	= plant age (d).
FF	= partitioning factor for the panicles ($g\ g^{-1}$).
FL	= partitioning factor for the leaf blades ($g\ g^{-1}$).
FS	= partitioning factor for the culm and leaf sheath ($g\ g^{-1}$).
FR	= partitioning factor for the roots ($g\ g^{-1}$).
IX(J)	= plant age coordinates in the partitioning rules table (d). See Part I for more details.
LWPOT(MDAY)	= leaf water potential at 1/2 h past solar noon (−bar).
PLUSW	= daily dry matter gain before maintenance respiration ($g\ m^{-2}$).
PRBAL	= net dry matter gain for the last 3 days contributed by the lowest leaf layer ($g\ m^{-2}$). This value is negative if respiration exceeds CO_2 fixation.
R(J)	= resistance to water flow between the soil in layer J and the leaves ($bar\ h\ cm^{-1}$).
TOTRES	= total resistance to water flow between all soil layers and the leaves ($bar\ h\ cm^{-1}$).
X	= proportionality factor used to interpolate between values in the partitioning rules table.
XWF	= current day's weight of panicles ($g\ m^{-2}$).
XWL	= current day's weight of leaf blades ($g\ m^{-2}$).
XWS	= current day's weight of culm and leaf sheath ($g\ m^{-2}$).
XWR1	= current day's weight of roots in soil layer 1 ($g\ m^{-2}$).
XWR2	= current day's weight of roots in soil layer 2 ($g\ m^{-2}$).
XWR3	= current day's weight of roots in soil layer 3 ($g\ m^{-2}$).

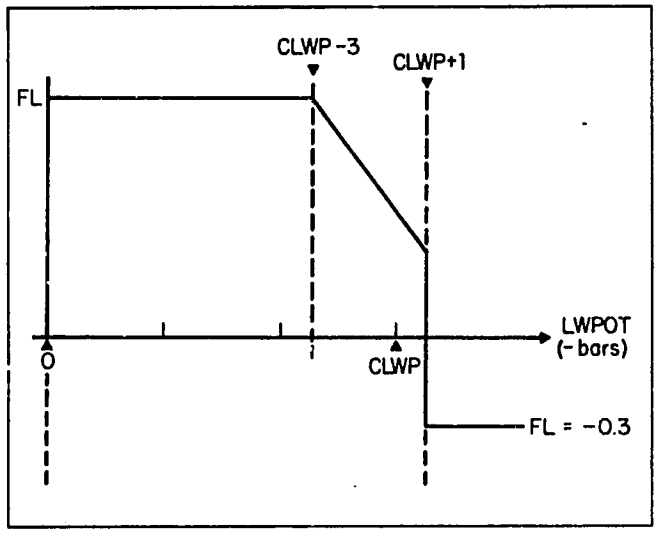

16. Effect of LWPOT(MDAY) on the partitioning of assimilate to the leaf blades. In nonwater-stressed crops FL is determined by phenological stage from the partitioning rules table.

YF(J)	= panicle partitioning factor when the plant age is IX(J) ($g\ g^{-1}$).
YL(J)	= leaf blade partitioning factor when the plant age is IX(J) ($g\ g^{-1}$).
YS(J)	= culm and leaf sheath partitioning factor when the plant age is IX(J) ($g\ g^{-1}$).
YR(J)	= root partitioning factor when the plant age is IX(J) ($g\ g^{-1}$).

PART III. MODEL VALIDATION, SAMPLE DATA SET, AND BIBLIOGRAPHY

Validation of RICEMOD with field experiments

This section compares RICEMOD simulated results and experimental field research results. Both field experiments were conducted during the 1980 dry season at the IRRI farm, Los Baños, Philippines. The rice (cv. IR36) crops were grown in aerobic soil (dryland) on a deep clay loam soil (Typic Hapludoll). A line source sprinkler system (Hanks et al 1976) was used to vary water status of the soil-plant-atmosphere continuum and provide validation data for comparison with RICEMOD.

The first experiment was designed for vegetative stage water stress. However, growth and yield results are shown for the entire crop. The second experiment concentrated on reproductive (flowering ± 5 days) growth and is a special challenge to RICEMOD. Comparison of results of the second experiment with RICEMOD is illustrated only after plant age 77 days.

Comparison of simulated and experimental results

A. *Experiment 1 (unpublished data from Chinchest 1981)*
In the following comparison of experimental and simulated

results, three water or irrigation levels are discussed: W_1 (wet), W_2 (intermediate), and W_3 (dry). Figure 17 illustrates the water applied at each irrigation level. Note the occurrence of a typhoon 74 days after seeding. Crop growth (cumulative aboveground dry matter) at each irrigation level is compared to the simulation in Figure 18. Until 70 days after seeding the simulated values are well within one standard deviation of the experimental results. After day 70, however, the model predicts performance below experimental results at all irrigation levels except W_3. The typhoon may have affected the crop water balance beyond the level of the current model water balance.

At crop maturity the experimental values for aboveground dry matter had decreased and simulated and experimental data were again similar. This anomaly in comparison of aboveground dry matter as well as differences in leaf area index (not shown due to large experimental error) associated with senescence deserve further research.

It should be noted that in Figure 18 the delay in phenology resulting from water stress agrees well between simulated and experimental results. Table 1 illustrates the comparison of final grain yield. Experimental yields were equal at W_1 and higher by more than one standard deviation at W_2 and lower than simulated yields at W_3. However, the large standard deviation resulting from small plot samples on the line source sprinkler and characteristics of water deficit experiments make evaluation of the comparison somewhat speculative.

Figures 19 and 20 compare the model water balance with experimental results. The simulated results are similar to measured values in W_1 and agree best in W_3. W_2 shows the poorest agreement in total water in the 0 to 75 cm soil profile (Fig. 19) and volumetric water content compared by depth (Fig. 20). However, the high variation of experimental results in W_1 makes comparison speculative and highlights the inherent variability associated with soil water measurements. Measurement was discontinued after the typhoon but the final results at 100 days after seeding agree well. Considering the time period involved in Figures 19 and 20 and the typhoon, the soil water balance function appears to simulate the field water balance relatively well.

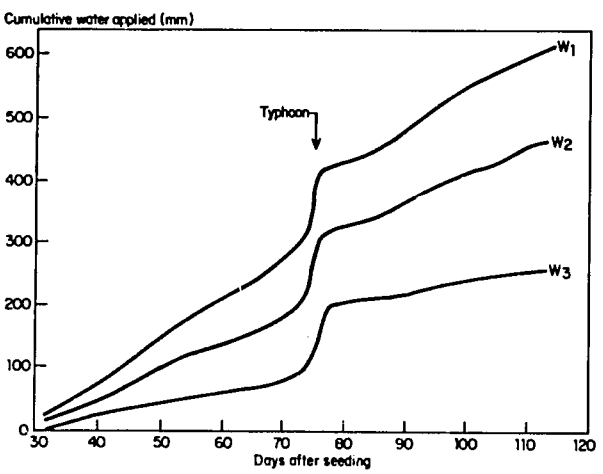

17. Cumulative water applied to the three irrigation treatments in experiment 1 over the entire crop growth period. IRRI, 1980 dry season.

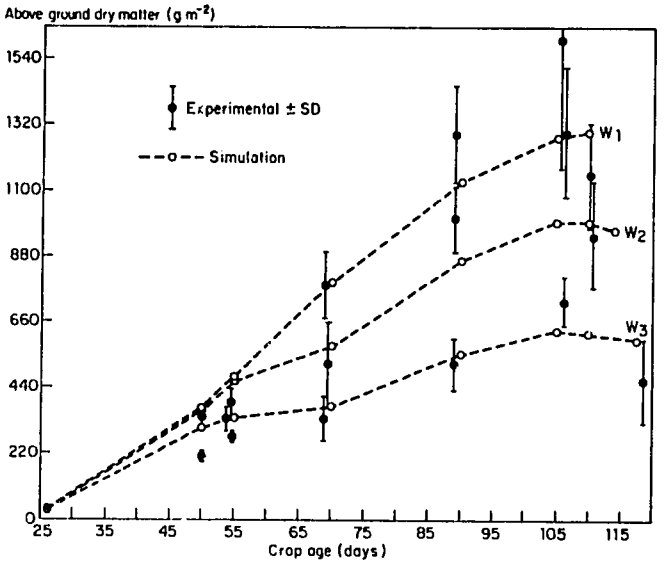

18. Comparison of experimental and simulated accumulation of total aboveground dry matter over the crop growth period as affected by irrigation levels W_{1-3}. Note experimental ± SD.

B. *Experiment 2 (unpublished data from Cruz 1981)*

Three irrigation levels were used but they were applied only during the flowering stage of crop development. Adequate irrigation was provided before that stage. Previous research has shown that flowering is the most sensitive yield-determining growth stage. Figure 21 illustrates the short period over which the water input was altered.

In Figure 22 simulated and experimental volumetric water content data have similar trends, the best agreement being in W_3, the driest water regime. During the stress period plant water potential was measured diurnally on several dates. Figure 23 compares the diurnal response of leaf water potential in RICEMOD with measured values. W_1 is a fully irrigated treatment and W_3 received no irrigation (see soil water depletion, Fig. 22). Hence, the plant water status decreased steadily over the stress period in W_2 and W_3 (Fig. 23).

Table 1. Comparison of experimental and simulated crop grain yield (g m^{-2}) for three irrigation treatments. IRRI Farm, 1980 dry season.

Irrigation treatment	Yield	
	Experimental	Simulated
W_1	645 ± 77	627
W_2	495 ± 89	295
W_3	167 ± 108	259

The effect of decreased leaf water potential is transduced into changes in crop gas exchange functions, partitioning and developmental processes. Straw weight and grain yield at harvest are presented in Table 2. It will be noted that the experimental data show maturity was delayed about 8 days by the water stress at irrigation levels W_2 and W_3. The model did not delay maturity when stress was encountered at this growth stage although we noted from Experiment 1 that maturity was delayed by vegetative stage stress.

In the second experiment grain yield was overestimated at all irrigation levels. This type of short duration water stress coinciding with a critical yield-determining growth stage is the utmost challenge to a physiologically based model. Thus, further field validation and improvement of RICEMOD photosynthate partitioning is necessary at this growth stage. Comparisons of soil water depletion and dry matter partitioning in the two experiments illustrate that RICEMOD was least effective at intermediate irrigation levels in both experiments compared to well watered and nonirrigated levels.

Although the experiments discussed represent a minimum data base for validation, they illustrate that RICEMOD is a significant beginning in the effort to understand the crop system as a whole. The inability to provide complete data sets for validation also points to the need for a a more complete interdisciplinary approach to rice research. The validation data currently available are for dryland rice,

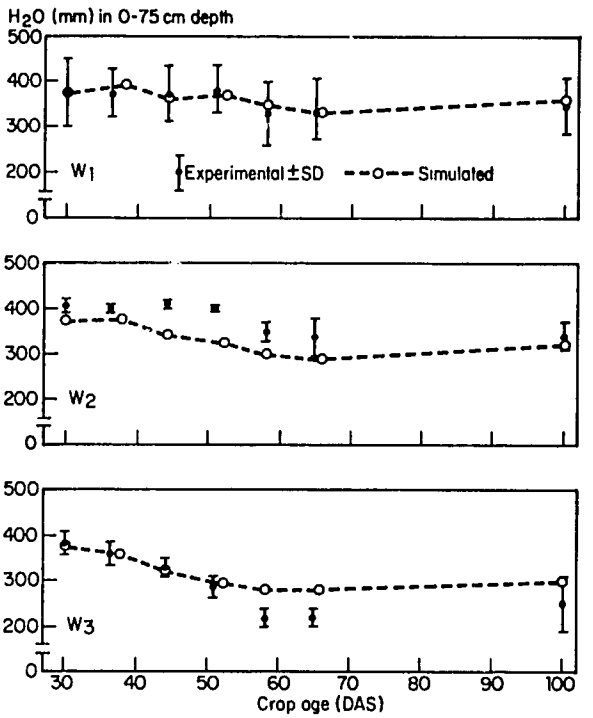

19. Comparison of experimental and simulated changes in total soil water in the 0 to 75 cm profile depth over the crop growth period as affected by irrigation levels W_{1-3}. Note experimental data ± SD.

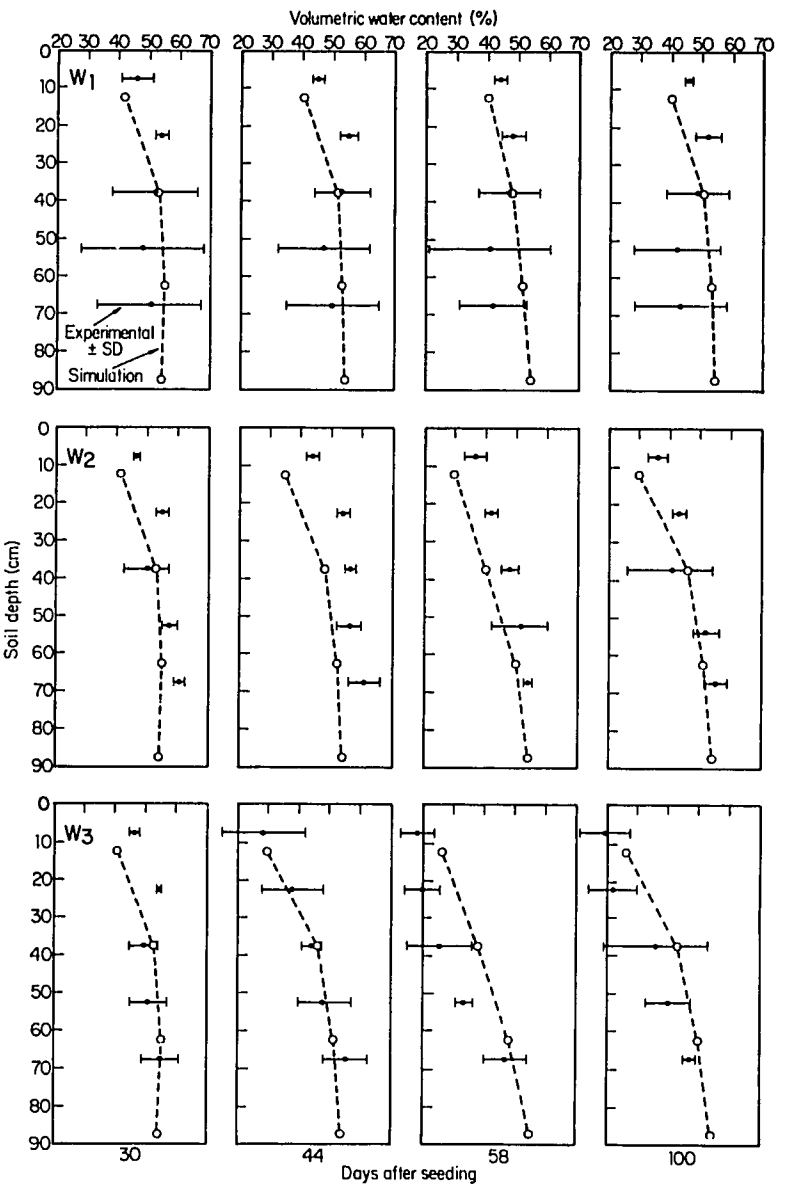

20. Comparison of experimental and simulated volumetric water content throughout the soil profile (0-90 cm) from different growth periods at 30, 44, 58, and 100 days after seeding as affected by irrigation levels W_{1-3}.

24

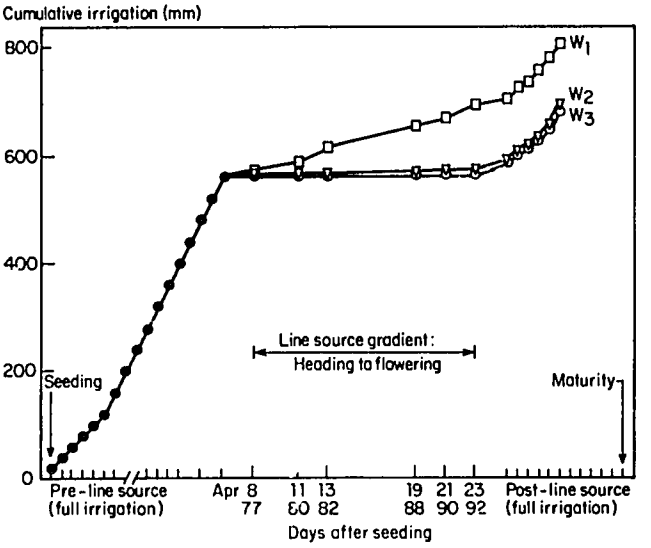

21. Cumulative water applied showing the stress period coinciding with flowering and the water applied at each of irrigation levels W_{1-3}. Note after the 15-day stress period, full irrigation was resumed on all plots.

therefore, RICEMOD in its present form focuses attention on the lack of soil physical information available for wetland soil conditions. In the wetland system, modeling the water balance will require knowledge of physical properties of puddled soils, the effect of puddled soils and hard pans on rice root system development, and interactions among other soil physical and chemical properties which at present are too poorly understood to permit modeling, and are inadequately documented to provide validation data sets.

RICEMOD has been validated using data primarily obtained during the dry season. In the future more effort should be made to validate the model with wet season crops.

The original RICEMOD (Part I) has been expanded to consider soil water deficits. Water excess is also relevant as large areas are subject to flooding or relatively long periods of high (>50 cm) water depths. Nitrogen transformations and movement in the soil water, and ultimately in the crop is the next priority for inclusion in RICEMOD. The difficulty of modeling nitrogen transformations and fluxes in adequately irrigated and water deficit and excess conditions will present new challenges. The exploration of the questions asked in this context present challenging and vital research objectives for rice production in irrigated and rainfed fields. Answers to these lines of research will greatly determine production advances over the next decade of rice research.

Table 2. Comparison of simulated and experimental straw dry weight (A) and grain yield (B) at harvest (g m^{-2}).

	W_1		W_2		W_3	
	DAS*	Wt	DAS	Wt	DAS	Wt
		A. Straw weight				
Simulated	111	816.2	111	802.7	111	641.7
Experimental	111	841 ±111	119	666 ±68	119	636 ±52
	W_1		W_2		W_3	
	DAS	Yield	DAS	Yield	DAS	Yield
		B. Grain yield				
Simulated	110	559.6	111	233.5	111	217.8
Experimental	111	430.9 ± 8	119	185.8 ±48	119	80.8 ±10

*DAS = days after seeding.

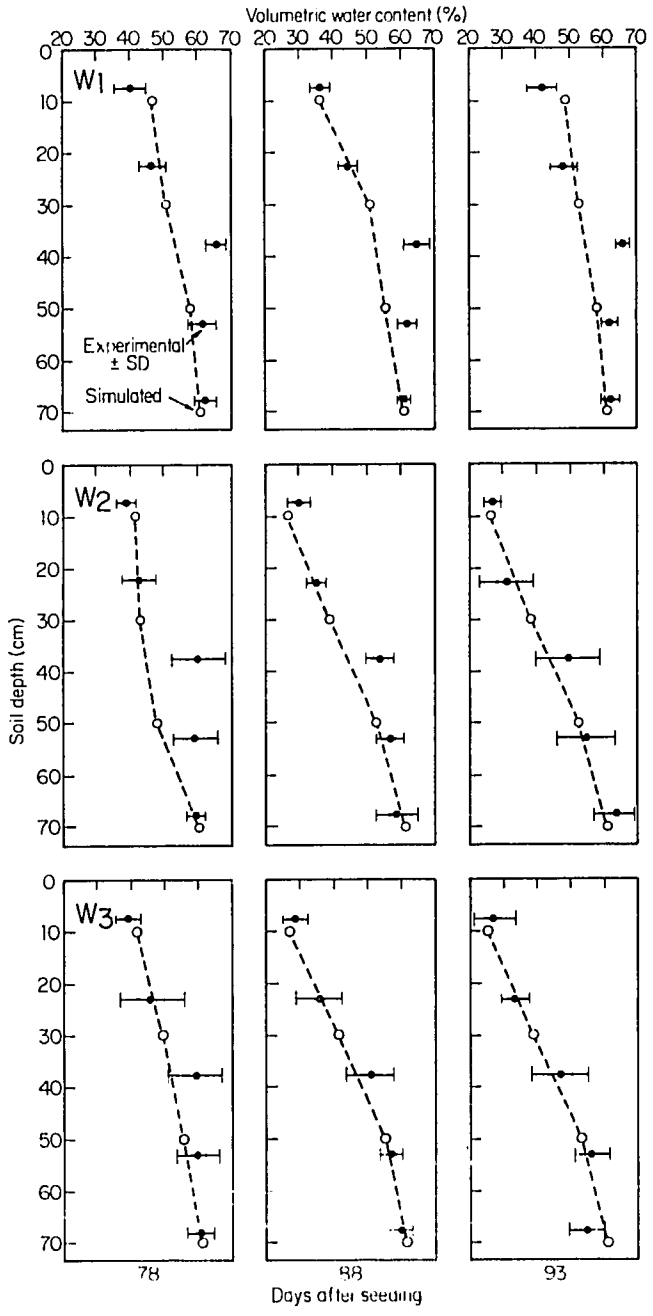

22. Comparison of experimental and simulated volumetric water content throughout the soil profile (0-75 cm) at 3 times: beginning, middle, and end of the 15-day water stress treatment. Changes in soil water content by depth are shown for irrigation levels W_{1-3}.

25

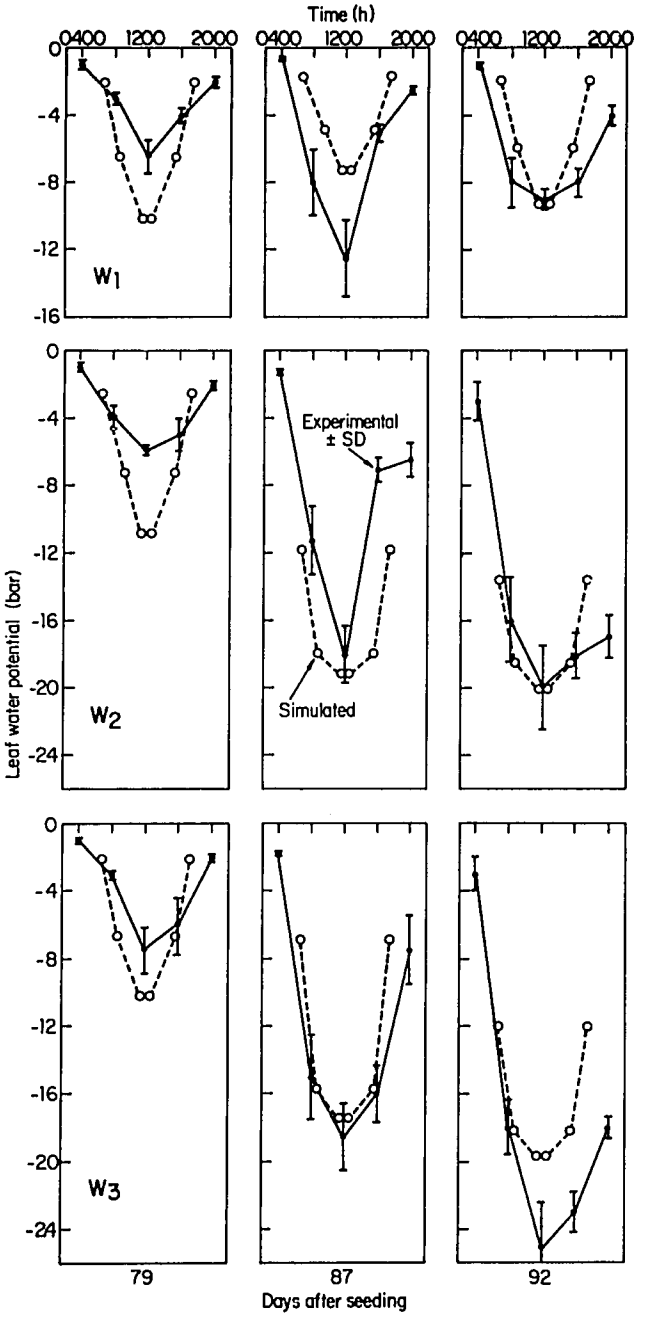

23. Comparison of experimental and simulated diurnal changes in leaf water potential at 3 times: beginning, middle, and end of the 15-day water stress treatment. Changes in the diurnal trends and magnitude of leaf water potential are shown for irrigation levels W_{1-3}.

Sample input-output data set

The following section contains a sample input-output data set including all relevant weather files, initial values, and operational coefficients. A includes the sample input weather file for 1980 Julian day 1 to day 120. B lists the partitioning table, initial values, coefficients for plant and soil parameters, and output at 10-day intervals. This sample set should expedite RICEMOD's use and lead to further refinements in this location-specific first approximation type simulation model.

A. Sample Input - WEATHER DATA FILE

Julian Day	Rainfall (mm x 10^{-1})	Pan Evap. (mm x 10^{-1})	Radiation (cal $cm^2 day^{-1}$)	Minimum temp. (°C x 10^{-1})	Maximum temp. (°C x 10^{-1})	Daylength (hr x 10^{-1})
1	8	63	508	225	305	115
2	8	63	508	225	305	115
3	8	63	508	225	305	115
4	8	63	508	225	305	115
5	0	58	387	221	294	115
6	10	63	558	201	300	115
7	13	43	372	199	299	115
8	0	67	544	214	296	115
9	260	48	492	201	295	115
10	0	62	555	193	303	115
11	0	60	582	179	305	116
12	250	30	371	218	291	116
13	0	48	382	231	306	116
14	0	33	300	211	230	116
15	0	36	287	225	292	116
16	250	60	470	215	301	116
17	112	32	389	223	305	116
18	0	35	317	220	270	116
19	0	44	433	209	291	116
20	0	60	482	212	306	116
21	0	54	494	214	301	116
22	2	34	325	226	285	116
23	240	35	270	215	281	116
24	13	33	265	221	271	116
25	0	40	342	214	290	117
26	0	35	332	220	288	117
27	2	32	297	220	281	117
28	0	51	477	215	311	117
29	280	54	498	207	331	117
30	10	37	397	221	311	117
31	0	50	480	201	300	117
32	0	60	496	217	305	117
33	260	64	632	215	323	117
34	0	56	462	226	311	117
35	0	63	507	230	320	118
36	15	55	603	200	313	118
37	10	25	304	207	272	118
38	0	47	422	207	290	118
39	0	44	429	205	302	118
40	300	48	347	211	295	118
41	0	34	331	211	295	118
42	2	60	492	200	306	118
43	8	64	420	221	303	118
44	249	19	232	212	254	119
45	5	31	313	208	287	119
46	5	43	376	215	288	119
47	110	58	475	210	305	119
48	0	88	610	214	315	119
49	0	48	395	212	303	119
50	0	80	629	218	327	119
51	280	92	648	209	325	119
52	0	84	585	201	323	119
53	0	78	580	200	320	120
54	220	80	590	200	319	120
55	0	72	643	201	327	120
56	0	76	563	208	327	120
57	270	49	498	202	312	120
58	0	67	649	162	336	120
59	85	80	560	189	343	120
60	0	78	542	218	332	120
61	165	89	511	201	332	120
62	0	67	485	200	341	121
63	0	85	589	199	338	121
64	170	80	587	200	327	121

26

Julian Day	Rainfall (mm x 10^{-1})	Pan Evap. (mm x 10^{-1})	Radiation (cal $cm^2 day^{-1}$)	Minimum temp. (°C x 10^{-1})	Maximum temp. (°C x 10^{-1})	Daylength (hr x 10^{-1})
65	0	77	569	192	325	121
66	115	96	575	191	340	121
67	0	68	509	201	321	121
68	100	78	572	211	345	121
69	46	61	491	203	350	121
70	90	74	527	217	335	121
71	0	88	594	216	331	122
72	0	74	443	215	324	122
73	140	89	587	215	331	122
74	0	86	621	220	330	122
75	120	85	597	212	321	122
76	0	69	477	215	320	122
77	0	94	589	213	334	123
78	150	76	560	206	325	123
79	0	50	364	216	310	123
80	150	103	671	215	328	123
81	0	82	613	191	327	123
82	190	84	608	205	329	123
83	145	44	340	227	302	123
84	925	28	149	216	260	123
85	23	13	231	215	265	124
86	0	47	459	230	310	124
87	69	38	402	227	302	124
88	5	48	470	227	300	124
89	2	29	400	235	303	124
90	8	66	517	217	314	124
91	0	80	662	230	325	124
92	0	72	558	220	320	125
93	220	80	523	220	325	125
94	0	90	618	218	330	125
95	8	87	574	219	330	125
96	205	70	580	225	322	125
97	8	90	614	216	330	125
98	132	36	365	230	305	125
99	0	44	493	225	305	125
100	0	84	658	227	337	126
101	230	86	683	220	340	126
102	0	84	646	232	337	126
103	140	66	490	208	331	126
104	0	83	486	221	340	126
105	130	76	678	203	355	126
106	0	82	642	236	342	126
107	110	81	662	230	353	126
108	0	62	451	228	313	127
109	0	60	508	230	337	127
110	180	62	508	225	337	127
111	0	68	473	234	337	127
112	0	59	567	235	347	127
113	50	83	660	220	357	127
114	0	77	597	218	350	127
115	0	99	623	232	348	127
116	130	100	653	225	353	128
117	8	93	560	230	344	128
118	0	108	640	243	356	128
119	180	80	508	231	345	128
120	0	80	580	235	347	128

E. Sample output — partitioning table, operational coefficients, and model output on 10 day interval.

```
IX =      0      30      40      50      64      75      86      94     102     110
YL =    .25     .25     .25     .30     .40     .05    -.05    -.05    -.20    -.30
YS =    .30     .30     .35     .50     .50     .60    -.15    -.10     .05     .15
YR =    .45     .45     .40     .20     .10     .05     .10     .15     .15     .15
YF =   0.00    0.00    0.00    0.00    0.00     .30    1.10    1.00    1.00    1.00

RMCOEF =    .0075  RGCOEF =    .2800  ANCOEF =  5.0000
TP AGE =       26  NCROPS =        1
Z      =  25. 25. 25.
ASCOEF(1)=125500.  BSCOEF =   -32.2  AKCOEF =    .0002632  BKCOEF = -2.1170001
ADCOEF =    .0111  BDCOEF = 35.9200  XW     =      66.30  AF     =      .5500
MC     =     .50    .55    .60    .54
LSS    =   0.000  PANF   =   1.150  RP     =   500.0
TP DATE=   35   0   0   0   0   0   0   0   0   0

PLANT AGE =  30 HARV.INDEX = 0.00 ROOT/SHOOT =  .83

 DAY  LEAF  STEM  ROOTS PANI. TOTAL TOPS
       GM    GM    CM    GM    GM    GM
  39  34.3  41.9  62.9   0.0 139.1  76.2

  LAI   XPD  PRBAL  XPAN  XRF  SUMRF
 1.11 23.54 51.28   .44  0.00   .25

       XP   LWPOT  XP   LWPOT  XP   LWPOT
TIME 1230   1230 1530   1530 1730   1730
       4.28  6.95  3.59  4.22  1.47   .84

 FREEW ESOIL TRANS SUMSD CLWP
  0.00   .23   .25  0.00 12.51

     Z    XWR1   MC    RWX  FLUX    R
1   25. 40.44  .415  .169  .095   307.
2   25. 16.47  .527  .055 -.057   951.
3   25.  5.95  .553  .022 -.270  2384.
```

27

```
PLANT AGE =  40 HARV.INDEX = 0.00 ROOT/SHOOT =  .78

 DAY  LEAF  STEM  ROOTS PANI. TOTAL TOPS
       GM    GM    GM    GM    GM    GM
  49  68.4  98.7 130.1   0.0 297.3 167.1

  LAI   XPD  PRBAL  XPAN  XRF  SUMRF
  2.13 35.06 22.17   .48  0.00  7.04

       XP   LWPOT  XP   LWPOT  XP   LWPOT
TIME 1230   1230 1530   1530 1730   1730
       4.08  7.61  3.45  4.67  1.48  1.01

 FREEW ESOIL TRANS SUMSD CLWP
  0.00   .13   .40  1.00 12.72

     Z    XWR1   MC    RWX  FLUX    R
1   25. 87.61  .416  .281  .178   205.
2   25. 30.74  .527  .084 -.268   687.
3   25. 11.79  .554  .034 -.143  1668.

PLANT AGE =  50 HARV.INDEX = 0.00 ROOT/SHOOT =  .59

 DAY  LEAF  STEM  ROOTS PANI. TOTAL TOPS
       GM    GM    GM    GM    GM    GM
  59 113.0 214.3 193.3   0.0 520.6 327.3

  LAI   XPD  PRBAL  XPAN  XRF  SUMRF
  3.37 51.22  4.33   .80   .85 15.59

       XP   LWPOT  XP   LWPOT  XP   LWPOT
TIME 1230   1230 1530   1530 1730   1730
       4.35 12.12  3.79  7.47  1.96  1.66

 FREEW ESOIL TRANS SUMSD CLWP
  0.00   .11   .80  2.00 13.94

     Z    XWR1   MC    RWX  FLUX    R
1   25.132.48  .451  .568 -.135   164.
2   25. 43.61  .514  .163 -.056   570.
3   25. 17.19  .526  .068  .031  1364.

PLANT AGE =  60 HARV.INDEX = 0.00 ROOT/SHOOT =  .43

 DAY  LEAF  STEM  ROOTS PANI. TOTAL TOPS
       GM    GM    GM    GM    GM    GM
  69 179.5 346.9 226.5   0.0 752.9 526.4

  LAI   XPD  PRBAL  XPAN  XRF  SUMRF
  5.09 50.86  5.32   .61   .46 21.55

       XP   LWPOT  XP   LWPOT  XP   LWPOT
TIME 1230   1230 1530   1530 1730   1730
       4.03  9.47  3.50  5.97  1.86  1.58

 FREEW ESOIL TRANS SUMSD CLWP
  0.00   .03   .67  2.00 15.38

     Z    XWR1   MC    RWX  FLUX    R
1   25.156.37  .408  .478 -.029   150.
2   25. 50.15  .470  .135  .031   533.
3   25. 19.99  .514  .057  .068  1258.

PLANT AGE =  70 HARV.INDEX =  .01 ROOT/SHOOT =  .35

 DAY  LEAF  STEM  ROOTS PANI. TOTAL TOPS
       GM    GM    GM    GM    GM    GM
  79 221.7 484.5 250.6   8.1 964.9 714.3

  LAI   XPD  PRBAL  XPAN  XRF  SUMRF
  6.18 43.37   .30   .50  0.00 26.65

       XP   LWPOT  XP   LWPOT  XP   LWPOT
TIME 1230   1230 1530   1530 1730   1730
       3.52  8.95  3.06  6.03  1.64  2.34

 FREEW ESOIL TRANS SUMSD CLWP
  0.00  0.00   .58  2.00 14.79

     Z    XWR1   MC    RWX  FLUX    R
1   25.172.83  .354  .428 -.008   147.
2   25. 55.22  .418  .095  .032   660.
3   25. 22.56  .502  .053  .097  1183.

PLANT AGE =  80 HARV.INDEX =  .09 ROOT/SHOOT =  .31

 DAY  LEAF  STEM  ROOTS PANI. TOTAL TOPS
       GM    GM    GM    GM    GM    GM
  89 209.7 575.6 263.9  79.61120.9 865.0

  LAI   XPD  PRBAL  XPAN  XRF  SUMRF
  5.68 44.09  2.39   .29   .02 41.74

       XP   LWPOT  XP   LWPOT  XP   LWPOT
TIME 1230   1230 1530   1530 1730   1730
       3.39  4.10  2.97  2.65  1.74   .81

 FREEW ESOIL TRANS SUMSD CLWP
  3.28   .01   .32  4.00 13.70

     Z    XWR1   MC    RWX  FLUX    R
1   25.183.10  .550  .231 -.511   138.
2   25. 56.75  .493  .064  .014   499.
3   25. 23.87  .507  .028  .090  1148.

PLANT AGE =  90 HARV.INDEX =  .28 ROOT/SHOOT =  .27

 DAY  LEAF  STEM  ROOTS PANI. TOTAL TOPS
       GM    GM    GM    GM    GM    GM
  99 181.7 552.6 274.1 287.11295.51021.4

  LAI   XPD  PRBAL  XPAN  XRF  SUMRF
  4.74 46.04  7.53   .44  0.00 47.55

       XP   LWPOT  XP   LWPOT  XP   LWPOT
TIME 1230   1230 1530   1530 1730   1730
       3.26  5.77  2.92  3.71  1.91  1.11

 FREEW ESOIL TRANS SUMSD CLWP
  0.00   .03   .48  0.00 13.85

     Z    XWR1   MC    RWX  FLUX    R
1   25.190.86  .458  .341 -.680   135.
2   25. 58.55  .560  .095 -.227   488.
3   25. 24.68  .556  .041 -.224  1128.

PLANT AGE = 100 HARV.INDEX =  .42 ROOT/SHOOT =  .26

 DAY  LEAF  STEM  ROOTS PANI. TOTAL TOPS
       GM    GM    GM    GM    GM    GM
 109 146.7 507.6 292.7 480.81427.81135.1

  LAI   XPD  PRBAL  XPAN  XRF  SUMRF
  3.72 42.01 16.43   .60  0.00 53.65

       XP   LWPOT  XP   LWPOT  XP   LWPOT
TIME 1230   1230 1530   1530 1730   1730
       2.92  7.25  2.66  4.79  1.89  1.65

 FREEW ESOIL TRANS SUMSD CLWP
  0.00   .07   .61  0.00 15.41

     Z    XWR1   MC    RWX  FLUX    R
1   25.204.47  .398  .440  .017   131.
2   25. 62.02  .505  .121 -.004   475.
3   25. 26.22  .531  .053 -.005  1095.

PLANT AGE = 110 HARV.INDEX =  .49 ROOT/SHOOT =  .26

 DAY  LEAF  STEM  ROOTS PANI. TOTAL TOPS
       GM    GM    GM    GM    GM    GM
 119  99.2 514.3 304.3 579.31497.21192.9

  LAI   XPD  PRBAL  XPAN  XRF  SUMRF
  2.38 25.94 15.30   .80  1.80 59.13
```

28

```
        XP    LWPOT  XP·   LWPOT  XP    LWPOT
TIME 1230    1230 1530    1530 1730    1730
       1.82 17.57  2.26 15.94  1.73   7.59

 FREEW ESOIL TRANS SUMSD CLWP
  0.00   .19   .59  2.00 15.69

     Z     XWR1   MC     RWX  FLUX     R
1   25.211.75  .353  .174  .011   785.
2   25. 64.97  .444  .286  .037   477.
3   25. 27.56  .507  .127  .079  1072.

PLANT AGE = 111 HARV.INDEX =  .49 ROOT/SHOOT =  .26

 DAY  LEAF  STEM  ROOTS PANI. TOTAL TOPS
       GM    GM    GM    GM    GM    GM
  120  99.2 514.3 304.3 579.31497.21192.9

  LAI   XPD  PRBAL  XPAN  XRF  SUMRF
  2.38 25.94 15.30   .80  1.80 59.13

        XP    LWPOT  XP    LWPOT  XP    LWPOT
TIME 1230    1230 1530    1530 1730    1730
       1.82 17.57  2.26 15.94  1.73   7.59

 FREEW ESOIL TRANS SUMSD CLWP
  0.00   .19   .59  2.00 15.69

     Z     XWR1   MC     RWX  FLUX     R
1   25.211.75  .353  .174  .011   785.
2   25. 64.97  .444  .286  .037   477.
3   25. 27.56  .507  .127  .079  1072.
```

Bibliography of rice modeling

A bibliography of rice modeling publications is very brief when compared to the magnitude of modeling publications for the other major cereals. We have focused on physiologically based or process-oriented models (A) but have also included references to some climate or soil-water, balance-based models (B), and a few empirical or regression models (C). This three-part bibliography is intended to stimulate research interest and communication among the few rice researchers at relatively distant locations who are engaged in simulating rice growth and yield.

A. PHYSIOLOGICALLY BASED OR PROCESS-ORIENTED MODELS

Ahuja, S. P. 1974. Computer simulation of primary production of semiaquatic system using rice (*Oryza sativa*) — an analysis and modeling of the physics of biological-climatological coupling. Ph D thesis, University of California, Davis, California. 214 p.

Angus, J. F., and H. G. Zandstra. 1980. Climatic factors and the modeling of rice growth and yield. Pages 189-199 *in* World Meteorological Organization and the International Rice Research Institute. Proceedings of a symposium on the agrometeorology of the rice crop. International Rice Research Institute, Los Baños, Laguna, Philippines.

Horie, T. 1980. Studies on photosynthesis and primary production of rice plants in relation to meteorological environments. III. A model for the simulation of net photosynthesis, transpiration, and temperature of a leaf and a test of its validity. J. Agric. Meteorol. 35(4): 201-213.

Iwaki, H. 1975. Computer simulation of vegetative growth of rice plants.

Iwaki, H. 1977. Computer simulation of growth process of paddy rice. JARQ 11(1):6-11.

Kishitani, S., Y. Takano, and S. Tsunoda. 1972. Optimum leaf-areal nitrogen content of single leaves for maximizing the photosynthesis rate of leaf canopies: a simulation in rice. Jpn. J. Breed. 22(1):1-10.

McMennamy, J. A. 1980. Dynamic simulation of irrigated rice crop growth and yield. Pages 213-221 *in* World Meteorological Organization and the International Rice Research Institute. Proceedings of a symposium on the agrometeorology of the rice crop. International Rice Research Institute, Los Baños, Laguna, Philippines.

Murata, Y. 1975. Estimation and simulation of rice yield from climatic factors. Agric. Meteorol. 15(1):117-131.

Stansel, J. W., and R. E. Fries. 1980. A conceptual agromet rice yield model. Pages 201-212 *in* World Meteorological Organization and the International Rice Research Institute. Proceedings of a symposium on the agrometeorology of the rice crop. International Rice Research Institute, Los Baños, Laguna, Philippines.

Stansel, J. W., and R. E. Fries. 1980. A rice yield model. Proc. Tech. Work Group 18th:82-83.

Van Keulen, H. 1976. A calculation method for potential rice production. Contrib. Cent. Res. Inst. Agric. Bogor 21. 26 p.

Van Keulen, H. 1978. Simulation of influence of climatic factors on rice production. Pages 345-358 *in* Climatic change and food production: proceedings of an international symposium. University of Tokyo Press, Tokyo.

B. CLIMATE OR WATER BALANCE-BASED MODELS

Agrawal, R., R. C. Jain, M. P. Jha, and D. Singh. 1980. Forecasting of rice *Oryza sativa* yield using climatic variables. Indian J. Agric. Sci. 50(9):680-684.

Bolton, F. R., and H. G. Zandstra. 1981. A soil moisture-based yield model of wetland rainfed rice. IRRI Res. Pap. Ser. 62. 10 p.

Cablayan, D., and T. Wickham. 1978. Modeling the performance of two crops of rainfed rice. Pap. 78-2024, ASAE, St. Joseph, Michigan. 14 p.

Chapman, A. L., and W. R. Kininmonth. 1972. A water balance model for rain-grown lowland rice in northern Australia. Agric. Meteorol. 10(1,2):65-82.

Da Mota, F. S., and J. B. da Silva. 1980. A weather-technology model for rice in southern Brazil. Pages 235-238 *in* World Meteorological Organization and the International Rice Research Institute. Proceedings of a symposium on the agrometeorology of the rice crop. International Rice Research Institute, Los Baños, Laguna, Philippines.

Das, J. C., A. K. Mehra, and M. L. Madnani. 1971. Forecasting the yield of principal crops in India on the basis of weather-paddy/rice. Indian J. Meteorol. Geophys. 22(1):47-58.

Murata, Y. 1975. Estimation and simulation of rice yield from climatic factors. Agric. Meteorol. 15(1):117-131.

Steyaert, L. T. et al. 1978. The Indian monsoon circulation and crop yield models for wheat and rice. Bull. Am. Meteorol. Soc. 59(11):1505.

Tsujii, H. 1978. Effect of climatic fluctuation on rice production in continental Thailand — a proposal for a multidisciplinary approach model incorporating topographical hydrological and agronomic factors. Pages 167-179 *in* Climatic change and food production: international symposium. University of Tokyo Press, Tokyo.

C. EMPIRICAL OR REGRESSION MODELS

Chapman, A. L., and W. R. Kininmonth. 1972. A water balance model for rain-grown lowland rice in northern Australia. Agric. Meteorol. 10(1,2):65-82.

Daigo, Y. 1951. The agro-meteorological study on the production index of upland rice in Japan [in Japanese, English summary]. Mem. Industrial Meteorol. 15(1):1-59.

Hayashi, Y., and T. Sugawara. 1961. Studies on yield forecasting of rice. II. Yield forecasting seen from temperature in July at Tokai-Kinki Region [in Japanese]. Proc. Tokai Br. Crop Sci. Soc. Jpn. 32:18-24.

Ishimaru, H., and T. Miyagawa. 1970. Analytical research on the estimation methods of crop condition in Kyushu District. I. Fundamental conception on the estimation methods of the paddy rice yield and the yield components [in Japanese]. Rep. Kyushu Br. Crop Sci. Soc. Jpn. 34:41-45.

Matsushima, S. 1970. Crop science in rice: theory of yield determination and its application. Rev. ed. Fuji Publishing Co., Ltd., Tokyo. 379 p.

Matsushima, S. 1970. Simple methods for estimating the actual yield in individual rice fields. JARQ 5(3):7-11.

Miyagawa, T., and H. Ishimaru. 1970. Analytical research on the estimation methods of crop condition in Kyushu District. V. Studies on the estimation methods of paddy rice yield [in Japanese]. Rep. Kyushu Br. Crop Sci. Soc. Jpn. 34:52-54.

Rudenko, V. F., and S. D. Artylyakova. 1976. The modeling of yield in rice. Ref. Z. 7.55.468.

Sugawara, T., and Y. Hayashi. 1965. Fundamental studies on yield forecast of rice. 12. Studies on simple method to survey the rice yield [in Japanese]. Proc. Tokai Br. Crop Sci. Soc. Jpn. 43:7-9.

Sugawara, T., and M. Nozaki. 1965. Fundamental studies on yield forecast of rice. 13. Studies on simple method to survey the rice yield [in Japanese]. Proc. Tokai Br. Crop Sci. Soc. Jpn. 43:9-11.

Terjung, W. H., S. Louie, and P. A. O'Rourke. 1976. Seasonally based photosynthesis model predicting world food productivity. Int. J. Meteorol. 20(3):267-270.

Tsuno, Y., and T. Shimizu. 1962. Studies on yield forecast in main crops. VI. On the relation between nitrogen content in leaves and photosynthetic ability of rice plant at ripening stage [in Japanese, English summary]. Proc. Crop Sci. Soc. Jpn. 30(4):325-328.

Van Ittersum, A. 1972. A calculation of potential rice yields. Neth. J. Agric. Sci. 20(1):10-21.

Yao, A. Y. M., and S. K. Leduc. 1980. An analogue for estimating rice yield in China. Pages 239-247 *in* World Meteorological Organization and the International Rice Research Institute. Proceedings of a symposium on the agrometeorology of the rice crop. International Rice Research Institute, Los Baños, Laguna, Philippines.

REFERENCES CITED

Angus, J. F. 1979. Simulating production of rainfed rice. Paper presented at a special seminar, International Rice Research Institute, Los Baños, Laguna, Philippines. 34 p.

Angus, J. F., and E. B. Manalo. 1979. Weather and climate data for Philippine rice research. IRRI Res. Pap. Ser. 41. 14 p.

Arkin, G. F., J. T. Ritchie, and S. J. Maas. 1978. A model for calculating light interception by a grain sorghum canopy. Pages 303-308 *in* American Society of Agricultural Engineers. Transactions of the ASAE.

Chinchest, A. 1981. The effects of water regimes and nitrogen rates on nitrogen uptake and growth of rice varieties. Ph D thesis, Cornell University, 204 p.

Cruz, R. T. 1981. Rice response of flowering stage to a line source sprinkler irrigation gradient. M Sc thesis, University of the Philippines at Los Baños, Laguna, Philippines. 59 p.

Curry, B. R. 1971. Dynamic simulation of plant growth. I. Development of model. Pages 946-949 *in* American Society of Agricultural Engineers. Transactions of the ASAE.

30

Curry, B. R., C. H. Baker, and J. G. Streeter. 1975. SOYMOD I: a dynamic simulation of soybean growth and development. Pages 963-974 *in* American Society of Agricultural Engineers. Transactions of the ASAE.

de Wit, C. T. 1958. Transpiration and crop yields. Versl. Landbouwkd. Onderz. 64(4):88 p.

Gardner, W. R. 1960. Dynamic aspects of water availability to plants. Soil Sci. 89:63-73.

Gardner, W. R., and D. I. Hillel. 1962. The relation of external evaporative conditions to the drying of soils. J. Geophys. Res. 67:4319-4325.

Hailey, J. L., E. A. Hiler, W. R. Jordan, and C. H. M. van Bavel. 1973. Resistance to water flow in Vigna sinesis L. (Endl.) at high rates of transpiration. Crop Sci. 13:264-267.

Hanks, R. J., J. Keller, V. P. Rasmussen, and G. D. Wilson. 1976. Line source sprinklelr for continuous variable irrigation-crop production studies. Soil Sci. Soc. Am. J. 40:426-629.

Hasegawa, S., F. T. Parao, and S. Yoshida. 1979. Root development and water uptake under field condition. Paper presented at a Saturday seminar, 24 February 1979, International Rice Research Institute, Los Baños, Laguna, Philippines.

Hesketh, J. D., D. N. Baker, and W G. Duncan. 1971. Simulation of growth and yield in cotton: respiration and the carbon balance. Crop Sci. 2:394-398.

Hillel, D. 1971. Soil and water: physical principles and processes. Academic Press, New York. 288 p.

Hillel, D. 1980. Applications of soil physics. Academic Press, New York. 385 p.

Hillel, D. 1980. Fundamentals of soil physics. Academic Press, New York. 438 p.

Horie, T. 1979. Studies on photosynthesis and primary production of rice plants in relation to meteorological environments. J. Agric. Meteorol. 35(1):1-12.

Hsiao, T. C., E. Fereres, E. Acevedo, and D. W. Henderson. 1976. Water stress and dynamics of growth and yield of crop plants. Pages 281-305 *in* O. L. Lange, L. Kappen, and E. D. Schulze, eds Water and plant life. Springer-Verlag, New York.

Hsiao, T. C. J. C. O'Toole, and V. S. Tomar. 1980. Water stress as a constraint to crop production in the tropics. Pages 339-369 *in* International Rice Research Institute and New York State College of Agriculture and Life Sciences, Cornell University. Priorities for alleviating soil-related constraints to food production in the tropics. International Rice Research Institute, Los Baños, Laguna, Philippines.

IRRI (International Rice Research Institute). 1972. Photosynthesis and respiration of plant parts. Pages 54-55 *in* International Rice Research Institute. Annual report for 1971. Los Baños, Philippines. 238 p.

Loomis, R. S., R. Rabbinge, and E. Ng. 1979. Explanatory models in crop physiology. Ann. Rev. Plant Physiol. 30:339-367.

McCree, K. J. 1974. Equation for the rate of dark respiration of white clover and grain sorghum, as function of dry weight, photosynthetic rate, and temperature. Crop Sci. 14:509-514.

McDonald, D. J. 1971. The effect of temperature and light on the rate of photosynthesis of 20 rice varieties and hybrids. Ph D thesis, Texas A&M University. 129 p.

McMennamy, J. A. 1980a. Dynamic simulation of irrigated rice crop growth and yield. Pages 213-221 *in* World Meteorological Organization and the International Rice Research Institute. Agrometeorology of the rice crop. International Rice Research Institute, Los Baños. Laguna, Philippines.

McMennamy, J. A. 1980b. Dynamic simulation of irrigated rice crop growth and yield. Paper No. 80-4008 presented at the summer meeting of the American Society of Agricultural Engineers, San Antonio, Texas.

Monsi, M., and Y. Murata. 1969. Development of photosynthetic systems as influenced by distribution of matter. Pages 115-129 *in* Centre for Agricultural Publishing and Documentation. Prediction and measurement of photosynthetic productivity, proceedings of the IBP/PP technical meeting. Trebon. September 14-21. Wageningen.

Morooka, Y., R. W. Herdt, and L. D. Haws. 1979. An analysis of the labor intensive continuous rice production system at IRRI. IRRI Res. Pap. Ser. 41 p.

Murata, Y. 1975. The effect of solar radiation, temperature, and aging on net assimilation rate of crop stands — from the analysis of the maximal growth rate experiment of IPB/PP. Proc. Crop Sci. Soc. Jpn. 44(2):153-159.

Newman, E. I. 1969. Resistance to water flow in soil and plant. I. Soil resistance in relation to amounts of root: theoretical estimates. J. Appl. Ecol. 6:1-12.

Passioura, J. B. 1982. The role of root system characteristics in drought resistance of crop plants. Pages 71-82 *in* International Rice Research Institute. Drought resistance in crops with emphasis on rice. Los Baños, Laguna, Philippines.

Penning de Vries, F. W. T. 1975. The cost of maintenance processes in plant cells. Ann. Bot. 39:77-92.

Ritchie, J. T. 1972. Model for predicting evaporation from a row crop with incomplete cover. Water Resour. Res. 8:1204-1213.

Spedding, C. R. W. 1980. Dynamic simulation: a positive feedback mechanism for experimental research in the biological sciences. Agric. Systems 5:239-250.

Takano, Y., and S. Tsunoda. 1971. Curvilinear regression of leaf photosynthetic rate on leaf nitrogen content among strains of *Oryza* species, Jpn. J. Breed. 21(2):9-17.

Tanaka, A., K. Kawano, and J. Yamaguchi. 1966. Photosynthesis, respiration and plant type of the tropical rice plant. Int. Rice Res. Inst. Tech. Bull. 7.

Uchijima, Z. 1976. Microclimate of the rice crop. Pages 115-140 *In* International Rice Research Institute. Climate and rice. Los Baños, Philippines.

van den Honert, T. H. 1948. Water transport in plants as a catenary process. Discussions Faraday Soc. 3:146-153.

Yamaguchi, J. 1978. Respiration of growth efficiency in relation to crop productivity. J. Fac. Agric. Hokkaido Univ. 59:59-129.

Yoshida, S., and F. T. Parao. 1976. Climatic influence on yield and yield components of lowland rice in the tropics. Pages 471-494 *in* International Rice Research Institute. Climate and rice. Los Baños, Philippines.

Yoshida, S., and V. Coronel. 1976. Nitrogen nutrition, leaf resistance, and leaf photosynthetic rate of the rice plant. Soil Sci. Plant Nutr. 22(2):207-211.

Yoshida, S., and M. Shioya. 1976. Photosynthesis of the rice plant under water stress. Soil Sci. Plant Nutr. 22:169-180.

Yoshida, S., and S. Hasegawa. 1982. The rice root system: its development and function. Pages 97-114 *in* International Rice Research Institute. Drought resistance in crops with emphasis on rice. Los Baños, Philippines.

Zur, B., and J. W. Jones. 1981. A model for the water relations, photosynthesis and expansive growth of crops. Water Resour. Res. 17:311-320.

ACKNOWLEDGMENT

The authors are indebted to Drs. D. W. Puckridge, L. D. Haws, S. Yoshida, and S. Hasegawa, for allowing use of their unpublished data to derive several model response functions. We thank Dr. T. C. Hsiao and Dr. R. Brinkman for their contribution in theory development. Dr. F. D. Whisler's assistance in validation is also appreciated. Special thanks to Mr. R. T. Cruz and Dr. Amnart Chinchest for use of their theses research to validate the soil and plant water relations components of RICEMOD. Finally, we appreciate the continued support of Dr. N. C. Brady, former IRRI director general, during the 4 years that elapsed from early discussions to this version of RICEMOD 300.

The International Rice Research Institute
P.O. Box 933, Manila, Philippines

Stamp

DIS
Bicol

ISSN 0115-3862

Other papers in this series

FOR TITLES FOR NUMBERS 1—40 SEE PREVIOUS ISSUES.

No. 41 Weather and climate data for Philippine rice research
No. 42 The effect of the new rice technology in family labor utilization in Laguna
No. 43 The contribution of varietal tolerance for problem soils to yield stability in rice
No. 44 IR42: a rice type for small farmers of South and Southeast Asia
No. 45 Germplasm bank information retrieval system
No. 46 A methodology for determining insect control recommendations
No. 47 Biological nitrogen fixation by epiphytic microorganisms in rice fields
No. 48 Quality characteristics of milled rice grown in different countries
No. 49 Recent developments in research on nitrogen fertilizers for rice
No. 50 Changes in community institutions and income distribution in a West Java village
No. 51 The IRRI computerized mailing list system
No. 52 Differential response of rice varieties to the brown planthopper in international screening tests
No. 53 Resistance of Japanese and IRRI differential rice varieties to pathotypes of *Xanthomonas oryzae* in the Philippines and in Japan
No. 54 Rice production in the Tarai of Kosi zone, Nepal
No. 55 Technological progress and income distribution in a rice village in West Java
No. 56 Rice grain properties and resistance to storage insects: a review
No. 57 Improvement of native rices through induced mutation
No. 58 Impact of a special high-yielding-rice program in Burma
No. 59 Energy requirements for alternative rice production systems in the tropics
No. 60 An illustrated description of a traditional deepwater rice variety of Bangladesh
No. 61 Reactions of differential varieties to the rice gall midge, *Orseolia oryzae*, in Asia. Report of an international collaborative research project
No. 62 A soil moisture-based yield model of wetland rainfed rice
No. 63 Evaluation of double-cropped rainfed wetland rice
No. 64 Trends and strategies for rice insect problems in tropical Asia
No. 65 Landforms in the rice-growing areas of the Cagayan River Basin
No. 66 Soil fertility, fertilizer management, tillage, and mulching effects on rainfed maize grown after rice
No. 67 High-temperature stress in rice
No. 68 Weed-fertilizer interactions in rice
No. 69 The azolla-anabaena complex and its use in rice culture
No. 70 An index to evaluate the effect of water shortage on the yield of wetland rice
No. 71 The development and diffusion of rice varieties in Indonesia
No. 72 Levels of resistance of rice varieties to biotypes of the BPH, *Nilaparvata lugens*, in South and Southeast Asia
No. 73 Growing season analyses for rainfed wetland fields
No. 74 San Bartolome: beyond the green revolution
No. 75 Pathotypes of *Xanthomonas campestris* pv. *oryzae* in Asia
No. 76 Focusing field research on future constraints to rice production
No. 77 An international survey of methods used for evaluation of cooking and eating quality of milled rice
No. 78 Research on algae, blue-green algae, and phototrophic nitrogen fixation at the International Rice Research Institute (1961-81), summarization, problems, and prospects
No. 79 Seed-derived callus culture for selecting salt-tolerant rices
No. 80 Economic limitations to increasing shallow rainfed rice productivity in Bicol, Philippines
No. 81 Irrigation system management research and selected methodological issues
No. 82 Interdisciplinary challenges and opportunities in international agricultural research
No. 83 Comparative analysis of cropping systems: an exploratory study of 14 rainfed sites in the Philippines
No. 84 Rapid generation advance of rice at IRRI
No. 85 Physicochemical characterization of iron-toxic soils in some Asian countries
No. 86 New rice technology, intrarural migration, and institutional innovation in the Philippines

37