ISN-31888 PN-AAN-678/62 9365709

Bioenergy Systems Report

JUNE 1983: BIOENERGY FOR ELECTRIC POWER GENERATION

INTRODUCTION

Electric power has been called the universal common denominator of the energy sector. Energy resources vary widely from country to country, as do the patterns of energy consumption. However, every country needs dependable and relatively low-cost sources of electric power for both urban and rural areas.

Only a few developing countries have significant coal resources, and most of these are undeveloped. Some developing countries have extensive hydropower development, but most do not. The typical developing country generates a very high percentage of its electric power with petroleum fuels, including oil-fired central steam generating plants and decentralized diesel generating sets. The increased cost of these petroleum fuels has greatly increased the cost of power and limited the ability of power agencies to extend electric service to rural areas at reasonable rates.

While exact figures are not available, a United Nations official estimates that there are nearly two million villages in developing countries which do not have electric power. The extension of the national power grid to these villages has not been feasible due to the heavy capital costs of the necessary transmission and distribution system and to the limited demand for power in these rural areas which is due in part to high power rates. Some rural areas are served by small generators powered by diesel engines. However, the high price of diesel fuel has increased the cost and restricted the use and extension of this type of electric service.

There is substantial interest in developing countries in the use of fuels from biomass for power generation. At present the strongest interest is in the substitution of gas fuels from biomass for conventional fuels in engine-generator sets. Research or operational projects using "producer gas" from the thermal gasification of biomass for power generation are being conducted or planned in over twenty developing countries. At least five developing countries are producing power with "biogas" from the anaerobic digestion of manures and other biomass. A large "dendrothermal" program to produce power through the direct combustion of wood in steam generating plants is becoming operational this summer in the Philippines, and several other developing countries are considering such dendrothermal plants.

Part One of this Report reviews current projects for the production of power through the thermal gasification of wood and other biomass. Part Two describes the use of wood and other biomass as a boiler fuel in steam generating plants.

The Reports in this series are sponsored by the Bioenergy Systems and Technology (BST) Project of the U.S. Agency for International Development. Dr. Paul Weatherly is the project manager in the AID Office of Energy. Staff support for the Project is provided by a team from the Tennessee Valley Authority, based in the AID Office of Energy. The TVA coordinator is Mr. Edward Storey. Correspondence concerning BST activities should be addressed to: S&T Office of Energy, Room 509, SA-18, AID, Washington D.C. 20523. Telephone: (703) 235-8902.

The reports in this series are compiled and written by Dean B. Mahin, International Energy Projects, P.O. Box 591, Front Royal, Virginia USA 22630, telephone (703) 636-2126, under a contract with the Tennessee Valley Authority funded through the Bioenergy Systems and Technology Project of the U.S. Agency for International Development.

PART ONE: GAS FUELS FROM BIOMASS FOR POWER GENERATION

1. Gasification Overview

A high percentage of the electric power used in rural areas of developing countries is produced by relatively small generators powered by internal combustion engines. Some of these are spark-ignition engines designed for gasoline, but the great majority are compression-ignition engines using diesel fuel.

Internal combustion engines can be operated with two types of gas fuels produced from biomass. Biogas containing 60% methane is generated by the action of microbes on animal manures, human wastes, and some plant materials in the absence of oxygen. Electric power is being produced in biogas-powered generating sets in the U.S., several European countries, China, India, the Philippines, Taiwan, Ivory Coast, and perhaps other developing countries. This use of biogas in engine-generator sets has been reviewed in a Bioenergy Systems Report on "Bioenergy for Agriculture" published in March 1983.

This part of the current Report will focus on the second type of gas fuel for engines which is generally known as producer gas. It is generated by the partial oxidation of biomass in a thermal gasifier with limited air intake. The energy content of the gas is provided mainly by carbon monoxide (17 to 27%) and hydrogen (7 to 16%); the rest is inert gases, mainly nitrogen and carbon dioxide. Although the energy content of the producer gas is usually only about 150 Btu per cubic foot (5.9 MJ/m^3), the gas can be used in both spark-ignition and compression-ignition (diesel) engines. Once started, a spark-ignition engine will operate on 100% producer gas (or on 100% biogas). In diesel engines up to 90% of the diesel fuel can be replaced with producer gas or biogas, but some diesel fuel is needed for ignition.

Producer gas has been used in engines since before World War I. Several European firms built gasifiers in the 1920's and 1930's to provide mechanical power in rice mills and other processing plants. Crossley Brothers, a British firm, built gasifier units in Indo-China, Burma, the Fiji islands, and Mexico. One of these, installed in a rice mill in Burma in 1925 and used until 1952, was recently discovered more or less intact. The updraft gasifier was fueled with rice husks. The gas was cleaned in a centrifugal tar separator and used in a 110 BHP single-cylinder spark-ignition engine. Discussions are under way on a plan to restore this surviving example of the producer gas technology of an earlier era.

A few gasifier systems were built in Africa and Asia for the generation of electrical power in the 1920's and 1930's. When World War II cut off oil supplies to most of Europe, over a million small gasifiers were built in Sweden, Germany, and France to provide gas fuel for vehicles. For three decades after that war there was little interest in gasification. During the past five years, however, there has been a resurgence of interest in the use of thermal gasificaion to provide fuel for the production of mechanical and electrical power.

An introduction to thermal gasification was provided in a Bioenergy Systems Report in March 1982. The use of gasifiers for water pumping and grain milling and in fishing boats was reviewed in the March 1983 Report. A review of the current state-of-the art of gasification systems is planned for the spring of 1984.

2. Current Gasifier Projects

The following sections contain brief accounts of projects in 25 countries which involve the production of electric power with producer gas:

Costa Rica

The U.S. Agency for International Development and the government of Costa Rica are developing a 140 kW gasifier system for the electrification of Horquetas, a small town in a forested area not served by the national electric power grid.

The system is being developed under the AID Bioenergy Systems and Technology Project which also sponsors these bioenergy reports. Participating Costa Rican agencies include the Costa Rica Electric Company (ICE), the Costa Rican Institute of Technology (ITCR), and the Directorate General of Forestry.

Objectives of the bioelectrifica- tion system include improvements in the quality of life and the creation of new jobs through electrification, economic use of wood wastes resulting from forest resource development, substitution of renewable energy for petroleum imports, and development of bioelectrification technology in Costa Rica.

Marelco, Inc., of Alexandria, Virginia is designing the sytem which will include two modules. Each module will consist of a gasifier, gas-cleaning equipment, and an engine-generator set. The gasifiers will be manufactured in Costa Rica from Marelco designs based on experience with four previous gasifiers. A variable speed rotating grate will facilitate the use of several types of wood fuels. Forestry residues will be air dried for eight weeks and then chipped. The moisture content will be further reduced to about 20% in a dryer using exhaust heat from the engines.

The gas cleaning equipment and engine-generator sets will be purchased in the U.S. Each set will be rated at 115 kW for operation with natural gas; using producer gas, the gross output will be about 85 kW and the net output of each module will be about 70 kW. The government of Costa Rica will provide the site, site preparation, and power transmission and distribution facilities. The system is expected to be in operation early in 1984.

The German Society for Technical Cooperation (GTZ) will co-sponsor a regional training course on producer gas systems with the Latin American Energy Organization (OLADE) in Costa Rica in November 1982.

Citizens Energy Corporation of Boston, Massachusetts, sponsored a biomass energy project in Costa Rica which included the installation of a Brazilian-built gasifer to fuel a Chevrolet engine connected to a 22.5 kW generator. However, due apparently to problems of gas quality, the engine is reported to operate satisfactorily only when no load is attached.

Honduras

The Food and Agriculture Organization of the United Nations (FAO) in Rome is sponsoring a gasifier project in Honduras in cooperation with the Honduran natural resources agency. The unit will provide electric power at a small sawmill.

The U.S. Agency for International Development is considering a demonstration of rural electrification through wood gasification in Honduras which may resemble the project in Costa Rica described above.

Dominican Republic

A 10 kW gasifier power plant has been designed to operate on sugarcane bagasse under a project sponsored by the Swedish Commission for Technical Cooperation. The unit, built by REGUT i Vasterbotten AB of Sweden, has been delivered to the State Sugar Council of the Dominican Republic for testing.

Guyana

The world's largest system for the generation of electric power through wood gasification is being built in Guyana. The power plant is a component of the large Upper Demerara Forestry Project which is funded by the government of Guyana and the World Bank, Inter-American Development Bank, the European Economic Community, and the European Investment Bank. The gasification system, built by Imbert Energietechnik Gmbh of Weilerswirst, Germany, will be installed at a large sawmill producing 43,000 m^3 of lumber annually. The gasification system consists of seven modules; each module includes a gasifier, gas-cleaning equipment, engine, and generator.

The layout of a three-module Imbert power plant is shown in the sketch below. The process begins at the covered fuel storage pile (0); the system requires chunks of wood the size of a fist or matchbox with no more than 25% moisture content. A frontend loader fills fuel hoppers (1); belt conveyors feed the gasifiers (4). The gas cleaning and cooling systems include dust separators (5), heat exchangers (6), and gas washing and cooling units (7). The gas flows to storage tanks (11) and on to the engines (16). The system in Guyana will use 16-cylinder, 900 rpm engines built by SACM in France; they will drive generators rated at 672 kW. The power plant equipment is being shipped to Guyana and should be installed and operational by the end of 1983.

The system has been designed to produce about 4.7 MW; about 2.8 MW will be needed to meet the peak load in the sawmill and 1.9 MW will be used in the associated township. Two smaller Imbert gasification systems (60 kW and 125 kW) have operated for more than 12,000 hours at the project site during construction.

Brazil

About ten Brazilian firms have built gasifiers and 200 units are reported to have been installed in Brazil. Most of these have been heat gasifiers or small units for vehicles, water pumping, and other mechanical power applications; however, some of these gasifiers may be in use of power generation.

Sao Paulo's electric company (CESP) has operated two experimental units, a 500 kW system fueled with eucalyptus wood and a 450 kW system using charcoal.

Paraguay

In September 1982 the Imbert company delivered three 465 kW gasification units to a rural cooperative in Loma Plata/Chacco under a development project sponsored by the Menonite church. A 30 kW wood gasification system was operated at the site for 3,000 hours to provide a temporary power source until the larger units became operational at the beginning of 1983.

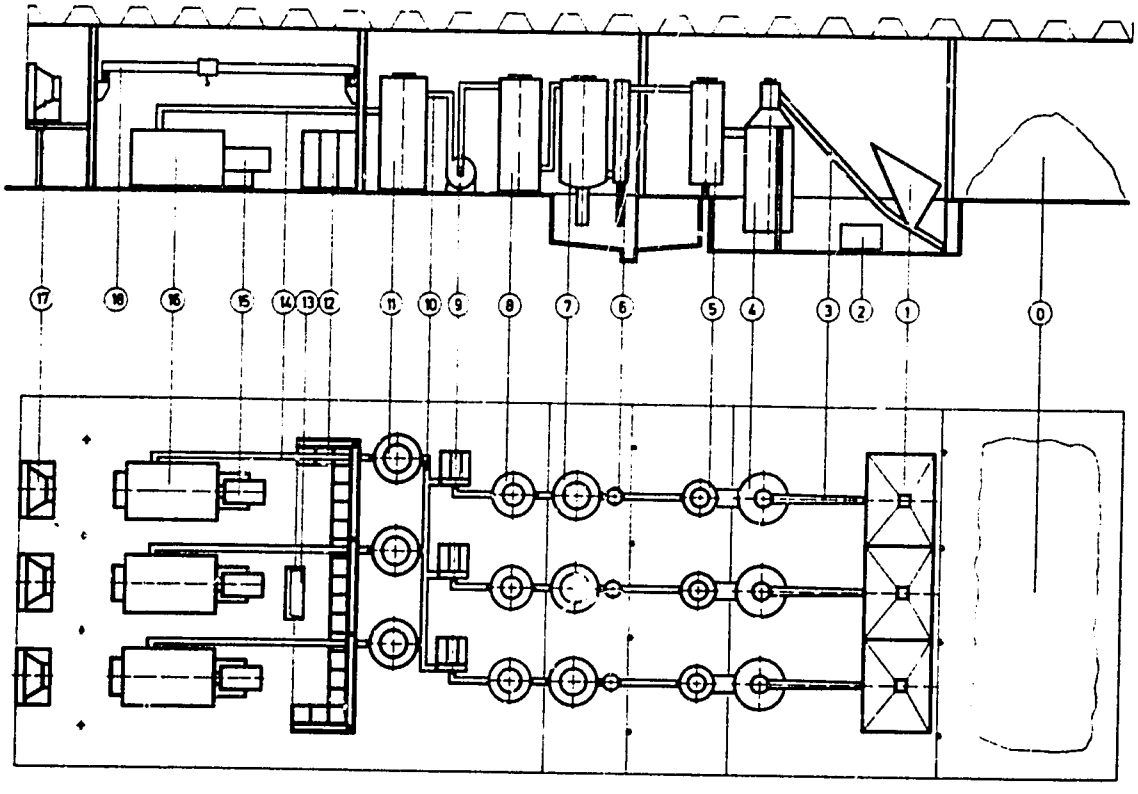

Philippines

Several institutions in th Philippines experimented with gasifier-to-power systems in the late 1970's. The University of the Philippines used a charcoal gasifier to fuel a 4-cylinder jeep engine connected to an AC generator. Power output with producer gas was 6.14 kW, compared to 6.71 kW with gasoline. Charcoal consumption was 1.48 kg per kWhr. Experiments with rice hulls and corn cobs in a larger gasifier with a 50 KVA diesel generating set demonstrated the need for improved gas cleaning equipment.

The Economic Development Foundation replaced 65 to 75% of the diesel fuel in a 80 HP engine with producer gas made from coconut husks. The engine drove a 37.5 KVA generator which provided power for 100 households.

The Gasifier Equipment and Manufacturing Company (GEMCOR), a government corporation in the Philippines, appears to be the only firm engaged in the large-scale manufacture of small and medium-sized gasifiers in any country except Brazil. Most of the GEMCOR gasifiers are designed to produce mechanical power for irrigation pumping, boats and vehicles, but GEMCOR also makes a charcoal gasifier suitable for use with a 50 HP diesel generating set. The unit is similar to the stationary gasifier built by GEMCOR for irrigation pumping which is shown on page 4 of the March 1983 Bioenergy Systems Report. GEMCOR indicates that the payback period for the unit is less than one year. The Philippine government's extensive gasification program has been supported in various ways by the U.S. Agency for International Development.

The Philippine National Electrification Administration has installed a gasifier on Batangas island to fuel a second-hand automobile engine driving a 30 kW generator. The unit operates with charcoal made from coconut shells.

The Philippine "dendrothermal" power program, described on pp. 21-22 of this Report, includes the installation of two 500 KW downdraft gasifiers built by Moteurs Duvant of Valenciennes, France. The units were scheduled to be ready for firing by June 1983.

South Pacific

Electricity for Tahiti's capital was provided by the gasification of coconut residues from 1928 to 1945. Shells and husks from about 500 coconuts per hour have fueled a 190 kW generator on the island of Bora Bora since 1978.

Six South Pacific countries (Fiji, Western Samoa, Vanuatu, Tonga, Papua New Guinea, and the Solomon Islands) are jointly seeking funding for a renewable energy program from the European Economic Community and the United Nations Development Program (UNDP). The program, which would be coordinated by the South Pacific Bureau for Economic Cooperation headquartered in Suva, Fiji, includes the following seven gasifier power projects:

(a) The largest of the projects would be operated by the Electric Power Corporation in Western Samoa. Two 870 kW gasifier systems would replace diesel-powered generating sets which operate mainly during the dry season when the capacity of hydro plants is greatly reduced. The two gasifiers would be fueled with up to 2.3 tons per hour of coconut stems, husks, and shells and/or dry wood chips.

(b) In Fiji a 300 kW charcoal gasifier would be retrofitted to an existing diesel generating set at a power station and possibly transferred later to a rural area. The Fiji project would include the construction of charcoal kilns to supply the gasifier.

(c) A gasifier using sawmill wastes would be retrofitted to a 160 kW diesel generating set in the Solomon Islands.

(d) A 300 KVA gasifier system would be installed at a wood-working plant at Kupiano in Papua New Guinea. The unit would use residues from the plant and from

a sawmill; they would be chipped and air dried in a covered shed. The producer gas would be used in a 265 kW spark-ignition engine connected to a 300 KVA generator. The power would be used in the factory and in the 160 households of the adjacent township.

(e) Two smaller gasifiers would be built in Vanuatu, formerly the New Hebrides. A 50 kW system using dry wood from a fuelwood plantation would provide power for a boarding school. A 75 KVA system, fueled mainly with charcoal from scrub clearing, would be the power source for a rural government center.

Indonesia

The Institute of Technology in Bandung, Indonesia, and Twente University of Technology in the Netherlands are cooperating on the installation of two 30 KVA gasifier-powered generating sets in Indonesia. One uses rubber tree residues to electrify the compound of a rubber plantation; the other uses mill residues to provide power for a sawmill. These projects are supported by the government of the Netherlands.

Thailand

The U.S. Agency for International Development is supporting a research and demonstration program on thermal gasification at Chulalongkorn University. The program includes the use of a 45 kW system fueled with rice husks to power a rice mill, a 25 kW system using corn cobs, and a small charcoal gasifier with a 500 Watt generating set designed for household lighting.

Experiments were conducted at the Prince of Songkla University with the use of producer gas in a 35 HP gasoline engine and a 24 HP diesel engine, each driving a 10 kW generator. The research was supported by the Swedish International Development Agency.

The National Energy Administration will use a 10 to 20 kW gasifier system in an unelectrified village to produce power for home lighting, rice milling, and/or water pumping. The Ministry of the Interior is installing 12 kW gasifier systems in five villages.

Several private firms are also operating gasifiers in Thailand; a cinema in Kanjanaburi is using a charcoal-fueled updraft gasifier to operate a 260 kW diesel generating set.

China

A 140 kW electric power generating system has been installed in China's Jiangsu province; the unit uses rice husks as fuel.

India

A recent paper by officials of the Ford Foundation and the Jyoti Solar Energy Institute proposed that 30 HP gasifier-engine-generator units could be used to provide electric power for irrigation pumps in India. Each unit would supply electricity to an area of about 45 ha with perhaps 15 tubewells. Although abut 25% of the energy in the producer gas would be lost in the conversion from mechanical to electrical power, there would be substantial advantages to the decentralized, electrified system compared to a single-well system. These would include better distribution of the demand on the water table, reduced losses of water, and the elimination of management and social problems associated with the sharing of water among farmers.

A joint U.S.-Indian energy collaboration program will include a demonstration of a 30 kW gasifier system for irrigation pumping. Participating agencies in the U.S are the Department of Energy and the U.S. Agency for International Development. Technical support is being provided by the Mitre Corporation of McLean, Virginia.

Pyrenco, Inc., of Prosser, Washington is discussing several gasification projects with the National Dairy Development Board of India, including a 190 kW system for a milk processing plant and a 40 kW skid-mounted unit for gasification demonstrations in rural areas. The Pyrenco units would use pelletized agricultural residues.

Sri Lanka

A Swedish-build BECE downdraft gasifier system using coconut shells as fuel is providing about 30 KVA of power for six motors at Giriulla Mills in Giriulla, Sri Lanka. The system was installed at the mill after it had been used as a demonstration unit at Peradeniya University during a producer gas training course organized by the Beijer Institute of Sweden in November 1982.

The layout of the system is indicated in the sketch below. The gasifier (1) is filled with fuel through a manually operated filling sluice. The unit has a fuel level indicator which sounds an alarm when filling is required. The system is started with the help of a 24 V start-up fan (6). Product gas exchanges heat with incoming air inside the gasifier shell before the gas is passed on to the gas cleaning section. Ashes are removed from the bottom of the gasifier at ten-hour intervals.

The gas-cleaning section includes a cyclone (2) which traps larger particulates, an impingement separator (3) which removes intermediate particles and most of the fines, a fiber glass filter (4) which removes any remaining solids, and a cooler (5) which condenses and traps liquids in the gas stream. The impingement separator and fiber glass filter are insulated so that the liquids will not condense out until they reach the cooler. Ash is removed from the cyclone every 40 hours; the filters are cleaned at 100-hour intervals. Condensate is drained from the cooler at the end of each five hours of operation.

The initial product gas is flared; the flare (7) has a water lock to prevent back-firing. After about ten minutes valve E is opened, Valve D is closed, and gas flows to the engine. The gas is mixed with air in a gas carburetor (9) attached to the International Harvester 9.9 liter gas engine (8). Engine speed is kept at 1500 rpm with electronic controls (11); the compression ratio is 9.5:1. The alternator (12) has a capacity of up to 40 KVA.

In an initial 130-hour test the unit used 35 kg of coconut shells per hour to produce 25 kW. The shells have a heating value of 18,000 kJ/kg and a moisture content of 10%. Overall efficiency was 16%.

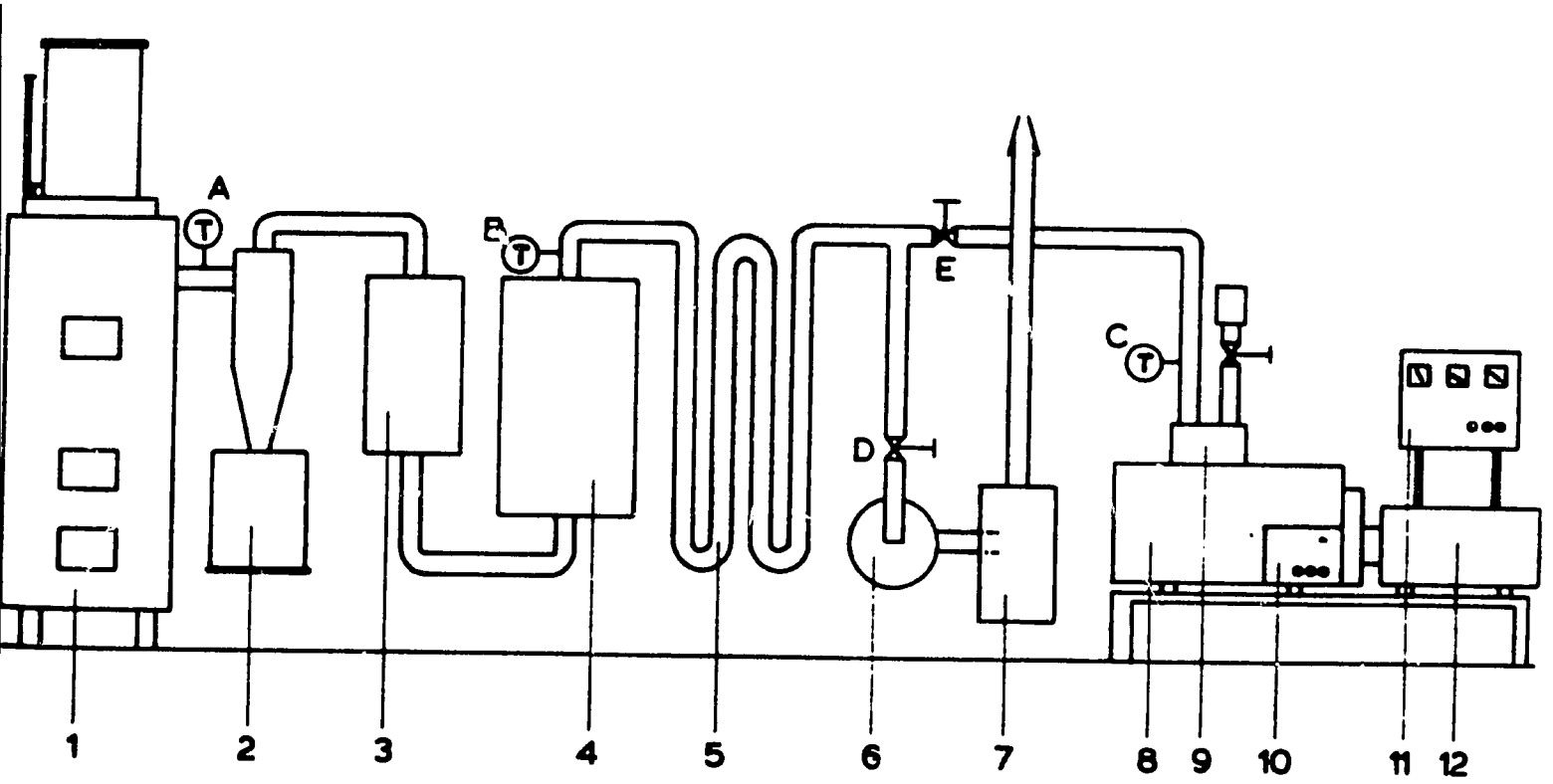

FAO in Rome is considering a gasifier system to provide electric power to a rural community in Sri Lanka.

Seychelles

A survey conducted by the Beijer Institute of Sweden in 1981 indicated that 20% of the power needs of the main island of the Seychelles, Mahe, could be met by the gasification of coconut residues. In 1982 the International Foundation for Science funded a research project on power production through the gasification of coconut husks which was conducted by the Ministry of Planning and Development. A restored Imbert type gasifier from World War II was linked to a Volvo V-8 gasoline engine and a 3-phase 35 kW alternator.

Problems with fuel feeding were due to the low density and rough and fibrous nature of the husks and perhaps to the relatively large pieces used in the tests. There were also some problems with ash removal and slagging due to the husk's relatively high ash content (almost 4%). Tests were made with coconut husks as a gas filtering medium, but large deposits formed in the inlet mainfold and there were starting problems due to deposits on the spark plugs. Improvements in the gas cleaning system will be made before proceeding with longer-term tests.

South Africa

Electric power generation is one of the goals of a major program launched by the government of South Africa to promote the use of gasification systems in industry and agriculture. The National Timber Research Institute, which is conducting the program, has tested engine-generator sets from 15 kW to 80 kW output. Four South African manufactures are ready to market gasifier systems. The national target is to produce 125,000 kW of electric power with gasifiers by the end of 1985. The power will be used to operate factory machinery, irrigation pumps, and agricultural machinery.

Sweden

Several Swedish organizations and firms have been engaged in efforts to adapt the extensive Swedish experience with vehicular gasifiers during World War II to the needs of developing countries. The Swedish International Development Agency has sponsored a producer gas secretariat at the Beijer Institute of the Royal Swedish Academy of Sciences. Four Swedish firms have built gasifiers in recent years. Projects of Swedish agencies and firms to produce electric power with gasifiers have been described in the sections of this Report on the Dominican Republic, Thailand, Sri Lanka, and the Seychelles. Tests of pellets made from wheat straw, coir dust, and cotton stalks are being conducted at the Royal Institute of Technology in a 40 kW power plant supplied by Gotland Gengas. A wood chip gasifier system built by Electromatik Power Generation AB is producing 36 kW at a sawmill in Sweden.

Germany

Imbert Energietechnik of Weilerswist, Germany, successor to a firm which built many vehicluar gasifiers during World War II, has built about eleven gasifier systems since 1979. Four 50 to 60 kW units have been used in Africa, Canada, and Guyana. Two 125 kW systems were installed in Canada and Guyana. A 500 kW system powers a wooden toy factory in Germany. Imbert systems have been described in the sections on Guyana and Paraguay.

The Fritz Werner Company of Geisenheim, Germany, is marketing a modified version of a Finnish downdraft gasifier designed to be operated with wood chunks the size of a matchbox or fist. The wood is converted to charcoal in the bottom of the gasifier; the charcoal must be replaced every two weeks. The unit will accept fuel with moisture content up to 50%. The company offers five models ranging from 100 to 265 kW output and has sold seven units to date in Europe and the U.S. A complete 100 kW power plant, including gasifier system and engine-generator, costs about $1,000 per kilowatt. Fritz Werner has also developed a prototype fluidized bed gasifier designed for agricultural and forestry residues. A proprietary filtering system is reported to eliminate virtually all tars from the gas.

The M.A.N. Company of Munich, Germany, built an updraft gasifier system under a grant from the German Ministry for Research and Technology. The system includes a 12-cylinder engine which produces about 125 kW of electrical power. The gas-cleaning and cooling system consists of a cyclone, a gas-water heat exchanger, and a 22 m^3 filter box which uses sawdust as the filter material. The system has been operated with several fuels including sawdust, chopped bark, and chopped straw. The principal problem with this type of gasifier is the production of a large volume of condensate; an economical and environmentally acceptable means of disposing of the condensate has not yet been found.

France

Moteurs Duvant of Valenciennes, France, has built several large downdraft gasifier systems for power generation. A 190 kW Duvant unit has operated for 8,000 hours on coconut husks and shells on the Pacific island of Bora Bora; some tar problems were encountered. Duvant now uses a gas recycling technique to obtain tar-free gas. The company is cooperating with another French firm, Creusot-Loire, in the development of a horizontal gasifier designed for use with densified vegetable fuels including cottonseed husks, coffee husks, and bagasse.

Netherlands

Twente University of Technology in Enschede, Netherlands, has extensive experience with downdraft or co-current gasifiers. As indicated above, the University is participating in two gasification projects in Indonesia which involve the production of electric power.

Energy Equipment Engineering of Oldenzaal, Netherlands, has built 65 kW and 125 kW prototype gasification systems.

Canada

The Energy From The Forest (ENFOR) Program of the Canadian Forestry Service has included 18 research projects on variousaspects of wood gasification since 1978. One of these was an experiment with the use of a wood gasifier for power generation conducted by the power company of Saskatchewan at a plywood mill in northern Saskatchewan.

The gasifier was designed as a fluidized bed unit but limitations in the feed system resulted in operation as an updraft fixed unit. Experiments were conducted with spruce chips with 50 to 60% moisture (wet basis). Product gas was used in a 12-cylinder air-cooled Deutz engine rated at 200 kW for operation with diesel oil; it was connected to a Brown Boveri generator rated at 150 kW. After several modifications of the gas cleaning system, engine output with 11% diesel oil increased to 145 kW.

The Saskatchewan Power Company also conducted tests in 1981 and 1982 with an Imbert gasifier fueling a 6-cylinder Duetz engine-generator rated at 65 kW with producer gas. At full load the unit consumed 176 pounds of wood chips per hour (80 kg/hour).

An Imbert gasifier coupled to a 120 kW engine-generator was installed late in 1981 at a motel complex at Fort Providence in Canada's Northwest Territories. The system uses dry fire-killed pine and spruce, chipped to particles smaller than 3" (7.5 cm).

Canadian Energy Development Systems International is installing a gasifier system to provide electricity at a sawmill.

United States

The largest experimental program in the U.S. on power production with a gasifier has been conducted in Alaska; the program objective was to develop a wood gasification system which could be used to provide power for remote Alaskan villages. Funding was provided by the U.S. Department of Energy's Bonneville Power Administration and the energy division of the State of Alaska. The gasification system was developed by Marenco, Inc., of Anchorage, Alaska.

Green wood was chipped at the site. A 60 HP Mobark disc chipper processed 4,000 to 6,000 pounds of wood per hour. The green chips were dried to 25% moisture by plowing radiator exhaust air from the system's Caterpillar engine through a drying hopper. An auger fed the fuel to a screening unit which rejected pieces larger than 2" and smaller than 1/4".

The fuel was fed by an automatically controlled feeding system to a 30" diameter downdraft gasifier. The gas then flowed to an ash cyclone which removed about one pound per hour of fine char and ash. In the original system the gas flowed from the cyclone to the inner tube of a vertical heat exchanger which transferred heat to the intake air en route to the gasifier. However, tars and other condensibles from the gas soon clogged the tubes. Subsequently, the heat exchanger was removed from the gas cleaning train and the intake air was heated with exhaust gases from the engine. Substantial modifications in the gas cleaning equipment also proved necessary.

The gas was used in a Caterpillar G353 6-cylinder spark-ignition engine designed to produce 170 kW when naturally aspirated and fueled with natural gas. The compression ratio was 10:1. A gas and air mixing box was added; the optimum (stochiometric) air/gas mixture was 135 $ft.^3$ of air per 100 ft^3 of producer gas. Engine performance was best with a spark timing of 23 degrees. Maximum sustained output with producer gas was 112 kW with a net output of 105 kW.

Marenco is now building a 250 kW wood gasification system at the large Mitkof lumber mill in Petersburg, Alaska. The gasifier has a 44" (112 cm) diameter bed with a wobble grate replacing the rotating eccentric grate used in the earlier test unit. The wood feed, ash extraction, and gas-cleaning sub-systems are essentially the same as in the previous system. The new system has been designed to produce 359 ft^3 (10.1 m^3) of producer gas per minute. The gas will be used in a Caterpillar G398 naturally aspirated V-12 spark-ignition engine.

The Bonneville Power Administration is also sponsoring a wood gasification system at the U.S. Forest Service's Wind River Nursery near Carson, Washington. The system will include a 48" (122 cm) diameter gasifier with a gas output of 5.4 million Btu/hour. About 60% of the gas will be used in a 350 kW engine-generator; due to derating for the low-Btu gas, the unit is expected to produce about 245 kW which will provide about 60% of the facility's electric energy requirements. Forty percent of the gas will be used for space heating in the nursery greenhouses; waste heat from the diesel engine will be used to preheat the intake air for the gasifier and to dry pine cones in the nursery's seed extraction unit. The system is scheduled for phased implementation during 1983 and 1984.

Pyrenco, Inc., of Prosser, Washington, generated power during a 24-day test period in 1981 using gas from a downdraft gasifier fueled with wood and bark pellets. The gas was used in a Caterpillar 3406-T diesel generating set rated at 175 kW; the maximum output when dual-fueled with producer gas and diesel fuel was 120 kW, with an average output of 104 kW.

Pyrenco is currently building a gasification system for an industrial park in Mio, Michigan. The initial 1.5 MW system, to be installed by the end of 1983, will include three 500 kW modules. The units will burn pellets produced from sawdust and other wood residues. The system may be expanded later to six modules.

Pelletized agricultural and forestry residues will be tested by Pyrenco in a 500 kW gasifier system under a research grant from the Bonneville Power Administration.

R and R Wood Products of California, Missouri, has produced a sawdust-fueled gasifier system with a 16 HP engine and a 5 kW induction generator. The system uses 12 to 20 pounds of sawdust per hour.

University of Florida engineers built a small gasification system mounted on a light trailer to demonstrate power production from wood chips at county fairs and energy expositions.

3. Economics of Gasifier Systems

Most of the data and assumptions used in an economic analysis for a gasifier project in a given country are relevant only to the specific site, region, or country of the proposed project. The conclusions drawn from such analyses are not transferrable from one country to another. Some factors which should be considered in making these analyses are outlined in the following paragraphs.

a. Capital or Equipment Costs

Equipment costs for gasifier systems vary widely depending on the size of the system, the fuel used, the type of gas-cleaning equipment, the degree of automation of fuel feeding and ash removal, and the source of the equipment.

In some cases the gasifier system consists only of equipment to produce the gas fuel including fuel handling equipment, gasifier, and gas cleaning devices; such systems are designed to be retrofitted to existing engine-generator sets. Smaller systems do not need automated equipment for fuel feeding, fuel bed stirring, and ash removal. Systems designed for use with charcoal require less complex gas cleaning equipment than systems using wood. Relatively small charcoal gasifiers with gas cleaning equipment are commercially available in the Philippines and Brazil for $50 to $100 per kW. However, only a few of these gasifiers have been used for power generation.

Larger gasifier systems involve much higher costs per kW. For satisfactory performance, systems above about 100 kW need automated fuel feeding and ash removal equipment and other automatic devices. This automation adds substantially to the cost of the system. Most of the larger systems have been designed to use wood or other biomass, rather than charcoal; these systems need more extensive gas cleaning equipment, and this equipment is a significant fraction of the total system cost. At present, since no developing country produces these larger systems, they must be imported from Europe or America. Firms manufacturing the systems usually offer a complete power plant which includes both the gas production and cleaning system and the engine-generator set. In the 100 to 150 kW size group, these complete power plants cost between $1,000 and $1,500 per kW. The capital cost per kW is even higher for smaller power plants. A Swedish firm indicated that a 30 kW system would cost $2,300 per kW and a German firm stated that a 20 kW system could cost $3,500 per kW. The cost of both larger and smaller systems could undoubtedly be greatly reduced if the units could be produced in substantial quantities.

The contribution of capital costs to the total cost of power per kilowatthour depends on the number of hours of operation per year and the projected lifetime of the system. A study of biomass gasification in developing countries by the Earthscan group in London indicated that only gasifiers costing below $200/kW would be economically feasible for operation for less than 750 hours per year. Conservative assumptions concerning the lifetime of equipment are necessary at present due to the limited operating experience with such systems.

Although the initial cost of systems with gasoline engines is lower than units with diesel engines, there is not a great difference in net costs between the two types of engines. Although gasoline engines are less expensive, they have a shorter operating life than diesel engines. Gasoline engines will operate on 100% producer gas, but the reduction in power output is greater than in diesel engines which are dual-fueled with producer gas.

b. Labor Costs

The extent and type of tending required for a gasifier power system depends on the type and reliability of the system, the degree of automation, and the type of periodic maintenance which is necessary. Very little published information is available on the amount and kind of labor needed for the successful operation of gasifier power systems.

The Saskatchewan Power Corporation concluded that a full time attendant would be necessary for a 150 kW gasifier system in a remote Canadian community, while only periodic checks would be needed for an all-diesel system. Due to the high cost in Canada of supervising the gasifier for three shifts a day, seven days a week (plus higher capital and maintenance costs), SPC concluded that the power generated by the gasifier system would cost twice as much as that produced by an all-diesel system.

Tests in 1981 of a 90 kW gasifier system convinced California Energy Commission officials that the system would be cost effective only when free, skilled labor was available and fuel costs were below $10 per ton.

In developing countries, supervision and maintenance costs would usually be less significant due to lower wage levels. However, more labor would be needed for fuel preparation, fuel feedings, and/or ash removal in less automated systems.

c. Fuel Costs

Comparisons of renewable energy systems with conventional systems usually assume that the higher capital costs of the renewable system will be offset by the considerable savings in fuel costs. Until recently, most such comparisons have projected steady increases in the future prices of conventional fuels. Now there is considerable uncertainty about the future prices of both fossil fuels and biomass fuels.

In many developing countries, previously "free" biomass fuels have been extensively commercialized. Even if there is no need to purchase the fuel, transportation and processing costs must be considered. In the Philippines substantial costs are being incurred for the operation of energy plantations and the conversion of wood to charcoal for use in gasifiers. The present and future costs of biomass fuels can only be estimted with reasonable accuracy by careful study of the factors influencing these costs at the site of a proposed project.

4. The use of Producer Gas in Boilers and Gas Turbines

A large updraft gasifier is providing some of the fuel for a gas-fired boiler at the Florida Power Corporation's generating plant at Ellaville, Florida. The system, built by Applied Engineering Company of Orangeburg, South Carolina, uses wood wastes including bark and chipped forest residues. The fuel is unloaded by a hydraulic truck unloader into a live-bottom pit; a drag chain conveyor raises the fuel to a feed hopper above the gasifier.

The gasifier has a maximum output of at least 32 million Btu/hour. In addition to low Btu gas, the system produces about 1 to 3 gallons per minute of a liquid containing 30% hydrocarbons and 70% water. The gas and liquids are piped separately from the exterior gasifier into the generating plant and are burned together in one of six burners in a 350,000 pound/hour boiler. Although difficulties were encountered with the liquids handling system, modifications have led to the expectation of a reliable operation in 1983.

The system cost over $1,000,000, but could save the power company the equivalent of one million gallons of fuel oil annually. Florida Power estimates that the energy produced by the system will cost from $2 to $3 per million Btu, compared to about $6 with oil and $4 with natural gas in Florida.

The U.S. Department of Energy is supporting experiments by the Aerospace Research Corporation of Roanoke, Virginia, with the use of producer gas in a gas turbine to generate electricity. The project goal is to provide design data for a gasifier-turbine system with a capital cost of less than $400/kW.

The ARC unit uses sawdust fuel mixed with compressed air. Although serious problems of erosion and corrosion in the turbine blades had been anticipated, the tests in a 375 kW gas turbine suggest that turbine blade life with producer gas may approach that with petroleum fuels.

PART TWO: THE DIRECT COMBUSTION OF BIOMASS FUELS IN STEAM GENERATING PLANTS

1. Introduction

Wood-fired steam engines made a major contribution to long-distance transport and industrial development in the U.S. in the early part of the nineteenth century. Wood was cut along the rivers and railroad lines to fuel steamboats and steam locomotives. Steam engines were used in many industries which were not located at a source of water power. This wood-burning era preceded the development of electricity for lighting and power. As the age of electricity dawned in the latter part of the nineteenth century, wood was being replaced by coal as the primary boiler fuel for both transportation and industry.

During the hundred years prior to about 1975, the use of wood as a boiler fuel was limited mainly to wood-processing industries; a wood-fired boiler was a good way to dispose of wood residues and to make low-pressure steam for space heating, lumber drying, or other industrial process heat.

Since the rapid increases in the prices of fossil fuels of the mid-1970's, there has been a great expansion of the use of wood fuels in boilers. Technology for the direct combustion of wood fuels, developed in the forest products industry over many decades, has advanced rapidly in the last few years. Many new systems for the handling and combustion of wood fuels are now on the market. Some non-forest industries have installed wood-fired systems. A number of larger wood-processing plants which formerly burned residues to produce low-pressure steam have installed "cogeneration" systems which produce both electric power and process heat. An 11-page review of "Wood Fuels for Industry" was provided in a Bioenergy Systems Report published in December 1982.

Although the technology for power generation in wood-fired steam plants is well developed, several factors have limited the economic feasibility of wood-fired electric utility plants in the U.S. These factors do not operate in the same degree in most developing countries.

In the U.S., the wood-fired systems most compete directly with other power sources. Many of the heavily forested regions are relatively close to major coal-producing areas and/or to oil and gas fields. A recent evaluation of the use of biomass for electricity generation by Battelle Columbus Laboratories concluded that the availability of coal was a major economic barrier to the commercialization of biomass-to-power systems in the U.S. In some of the forested areas, extensive hydropower development has helped to keep power costs relatively low.

In contrast, many of the developing countries have few if any fossil fuel resources and limited hydropower; a very high percentage of the electric power used in these countries is generated with imported petroleum fuels. The high cost of power generation with these fuels requires high power rates and/or costly subsidies and limits the economic feasibility of badly needed rural electrification projects.

In the U.S., the only economic power plants have been large plants. Until recently the power industry was trying to cope with a steady and high rate of increase in the demand for power which required large increases in output. Since virtually all rural areas except some remote Alaskan regions are connected to the power grid, there is little need for small, decentralized power systems. Many of the costs of planning and building a power plant are more or less fixed regardless of plant size; there are substantial economies of scale in both the construction and operation of larger plants. If a company produced more power than it needed for a few years, it could sell the surplus power to another region (using the interconnected grid system) until demand in its own area caught up with capacity. Most studies indicated that 50 MW was probably the maximum feasible size of a wood-fired power plant due primarily to the increased cost of fuel transported to the plant from more distant

locations. Most power companies have felt that 50 MW plants were too small to be economic; a recent review of "modular" power generation in an industry journal referred to modular units which would produce from 100 to 250 MW.

In contrast, a number of factors require much smaller power plants in many areas in developing countries. These include the limited power demand in many areas, the lack of ability to shift power from area to area due to the lack of grid interconnections, and difficulties in financing larger plants. Given this need for smaller plants and the high cost of generating power with petroleum fuels, the economic feasibility of wood-fired power plants appears to be greater in some developing countries than in the United States.

However, a number of issues concerning the design and operation of such plants remain to be resolved. One of these concerns the preparation and handling of the wood fuel. Due to high labor costs in the U.S. and other developed countries, industrial wood energy systems have been designed with extensive automatic equipment for the unloading, handling, conveying, processing, and stoking of wood fuels. The only technically feasible systems have been those in which the fuels were reduced to small particles ("hogged" residues or chips) which could be handled by the automatic equipment.

This high degree of automation adds greatly to the capital costs of wood-fired power plants which range from about $1,400/KW for a 25 MW plant to about $1,200/kW for a 50 MW plant. A major component of the capital cost consists of equipment for the handling and processing of the wood fuel, which is not shown in the diagram below.

In theory, it should be possible to reduce the capital costs of wood-fired plants in developing countries by designing systems which reduce the extent of the fuel preparation and use manual labor to the maximum feasible extent for thepreparation, handling, and stoking of the fuel. Practically, this means using stickwood or roundwood directly in boilers. While such wood was widely used in boilers in the early 19th century, most modern solid-fuel boilers have been designed for the automatic stoking of pulverized fuels.

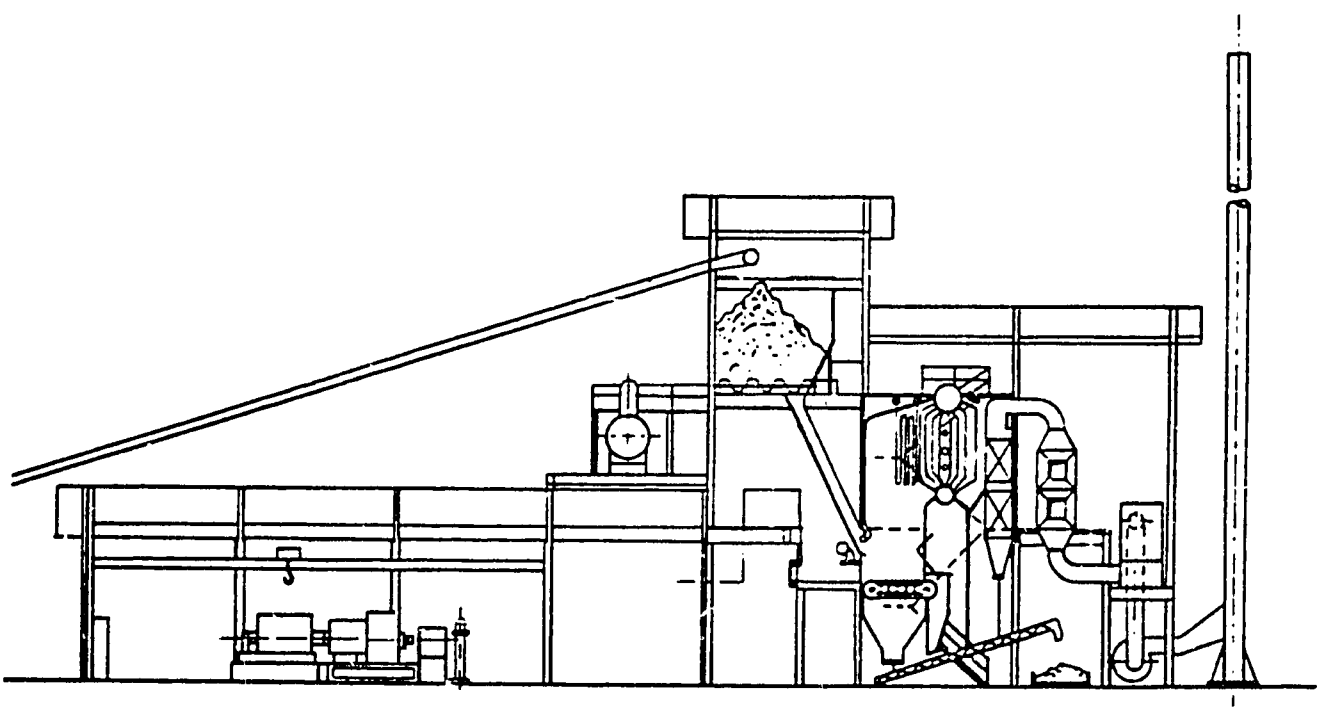

A British firm is currently completing a generating plant in the Philippines which will burn roundwood in an older-type boiler, and up to nine more of these plants are being built or planned in the "dendrothermal" power program in the Philippines described on pages 21-22 of this Report. Experience with these plants may provide some guidelines for the rebirth of the older approaches to steam generation with wood.

Another issue is the choice of generating system. Almost all of the power produced with steam in this era is generated with steam turbines; larger turbine systems are much more efficient and economic to operate than smaller turbines. The reciprocating piston steam engine, which played major roles in industry and transportation in the 19th and early twentieth century, has virtually disappeared. A survey of power options for remote communities for the Canadian government revealed no manufacturer of steam engines in North America and only one producer of these engines in Europe (Spillungwerk AG of Hamburg, Germany). The study indicated that, despite somewhat higher capital and operating costs, these steam engines might be competitive with steam turbines in some systems producing less than 500 kW. A study by Hodam and Associates of Sacramento, California, of the economics of wood gasifiers indicates that, up to 1,000 kW (1MW), systems using gasifiers to fuel engine-generators are less expensive and more efficient than steam generators of comparable size. Another close observer of gasifier systems suggests that they may by competitive with steam systems in much larger sizes up to the 8 MW level.

The remainder of this Report will provide information on five moderately distinct types of biomass-fueled electric power plants: (a) electric utility plants burning mill residues from forest products industries, (b) wood products plants which burn their own residues in cogeneration facilities, (c) electric utility plants burning wood chips, (d) plants fueled from energy plantations, and (e) utility and industrial power plants burning agricultural residues.

2. Utility Plants Burning Mill Residues

Several types of residues including sawdust, sanderdust, shavings, slab wood, and bark are produced by sawmills, plywood mills, furniture plants, and other types of wood-working industries. These residues have been burned in boilers for many years in larger mills; the steam has typically been used for lumber drying kilns, for other process heat, and/or for space heating. As the price of electric power has increased in recent years, many plants have installed systems for the generation of electricity or for the cogeneration of electric power and process heat.

Many mills and plants produce more residues than they can use. These residues are available for purchase by other industries including electric utilities. In a given area, the price of mill residues depends primarily on the quantity of residues produced in the area and the market for the residues in that area. Transportation costs usually preclude the transport of the residues for substantial distances.

In the U.S., the production of mill residues has decreased for several years due to reduced housing construction and reduced demand for lumber and building materials. Demand for wood residues by pulp and paper companies has been increasing. Thus the price of residues has increased very rapidly. At present, the cost of purchased mill residues in Washington state, a major lumber-producing area, is about $.42 per million Btu, which is still much lower than the cost of other fuels for thermal power plants. However, the Pacific Northwest region has extensive hydropower development and lower power costs than most other regions of the U.S. A study opf the feasibility of a 24 MW plant burning mill residues in Oregon indicated that the cost of power from the plant would be considerably higher than the present cost of electricity in Oregon.

Although mill residues are presently the most widely available and lowest cost type of wood fuel, the future availability and price of these residues remains uncertain.

A recent study for the Bonneville Power Administration noted that as the forest products industry learns to use such residues more efficiently, less will be available for power generation. The future supply and cost of mill residues for a wood-fired power plant can only be assessed through a detailed site-specific feasibility study which examines all the factors influencing the production and use of residues in that area.

At least five American power companies have used mill residues as fuels or are planning to do so:

Cowlitz County, Washington

From 1923 to 1960 the Cowlitz County Public Utility District operated a generating plant with mill residues from an adjacent lumber mill. The plant included a 27.5 MW boiler with a series of ten Dutch Oven combustion chambers; it supplied steam at 250 psi and about 500°F (260°C) to five small turbines. The plant was reactivated in the early 1970's to supply steam for a Weyerhauser Company facility.

Eugene, Oregon

The Eugene Water and Electric Board, a municipally-owned electric utility, has operated a 33.8 MW steam-electric plant since 1941 which is fueled with hogged bark and other mill residues from nearby forest industries.

The residues are hogged at the mills before delivery to the power plant. However, the fuel varies greatly in particle size, moisture content, tree species, and the proportion of wood and bark. If this low-quality wood was not used for steam generation, it would be burned in teepee incinerators. The plant eliminated about 25 of these incinerators and greatly reduced air pollution in the Eugene area.

The fuel is delivered by suppliers in self-dumping trucks to a large outdoor storage pile; a crawler tractor builds up the pile and feeds a chain conveyor. Oversize pieces are removed by a shaker screen and are carried to a hog for size reduction. After hogging, the maximum particle size is 3" (7.6 cm) and the average size is about 3/4" (1.9 cm). A metal detector stops the conveyor if tramp iron is detected. The fuel then moves to a covered storage area, from which it is drawn by automatic conveyors to the fuel bins above each boiler.

The system includes three boilers. Boiler #1 is a 90,000 pound/hour oil-fired unit built in 1931. Boiler #2, built in 1941, is a 120,000 pound/hour wood-fired Dtuch Oven unit operating at 250 psig and 710°F (377°C). It was subsequently converted to a spreader-stoker system with water-cooled stationary grates. This boiler supplies steam to a 10 MW generator. The third and larget boiler, added in 1950, is a spreader-stoker with a travelling grate. It can operate on wood, coal, or oil; using wood wastes, it produces 190,000 pounds of steam per hour at 600 psig and 835°F (446°C). Boiler #3 provides steam for a 15 MW generator. Both of the wood-fired boilers have pneumatic stokers similar to that shown below.

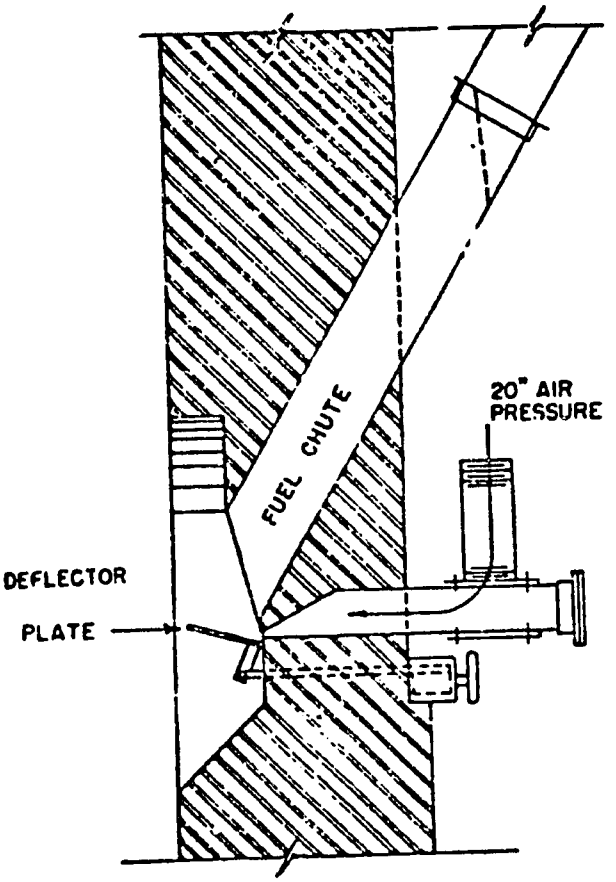

The Eugene plant is located in a region in which most of the electric power is provided by large hydroelectric plants; thermal plants are needed mainly in seasons when the water flows available for the generation of hydropower are reduced. The plant was designed to provide steam for district heating during the winter months when hydroelectric power is abundant. Over the past ten years the plant has provided from 500 to 600 million pounds of steam annually for heating buildings in a two-square-mile area which includes a hospital, college, cannery, and greenhouse complex. Although the three turbine generators produced 87,490 megawatt hours of power as recently as 1977 and about half that amount in 1979, no electrical power has been generated at the Eugene plant since 1980 due to the reduced demand for power, increased cost of wood residues, and adequate water for hydroelectric power production.

Kettle Falls, Washington

The Washington Water Power Company, an investor-owned electric utility based in Spokane, Washington, is completing a large new electric generating plant which will burn mill residues at Kettle Falls, near the U.S.-Canadian border.

Fuel for the plant will consist of 450,000 tons per year of bark, sawdust, shavings, and slabs from nine log-processing plants with a 100-mile radius of the new powerplant. The fuel will be trucked to the plant for an average of 46 miles at about $.11 per mile. Average delivered costs will be approximately $12 per ton during the initial year of operations. The trucks will be unloaded by two hydraulic truck dumpers; the fuel will be conveyed to a self-cleaning magnet for the removal of tramp iron and to a disc screen which will reject oversize materials to a hammerhog.

The wood fuels containing about 50% moisture will be burned in a travelling grate, spreader-stoker boiler; natural gas will be used as a backup fuel for ignition and for flame stability. The unit is designed to produce 417,000 pounds of steam per hour at 1500 psig and 950°F (510 °C). Power will be generated in a condensing General Electric turbine rated at 46 MW; the net capacity of the plant will be 42.5 MW. Turbine exhaust steam will be condensed in a shell-and-tube surface condenser. The system includes cyclone collectors and an electrostatic precipitator for the removal of flue gas particulates.

Capital costs of the project are estimated at $82.5 million. The plant is scheduled to begin operation in October 1983. It will operate for about 7,000 hours per year and will be shut down each spring when melting snow provides plenty of hydropower.

Red Wing, Minnesota

For about two years Northern State Power has co-fired about 20% wood residues and 80% coal at the NSP plant at Red Wing. Maximum particle size is 1 1/2" (3.8 cm). The use of more than 30% wood residues is precluded by the fuel feeding system and perhaps by the boiler characteristics. Mill residues usually cost about $.50 to $.60 per million Btu in the area, while coal costs $1.50 per million Btu.

Lake Superior District, Wisconsin

Since 1979 the Lake Superior District Power Company has co-fired mill residues and coal in a 92 MW powerplant. Due to waste disposal problems in the area, the company has been able to negotiate favorable contracts with lumber mills within a 60-mile radius. Plant conversion cost $850,000 in 1979, including $50,000 for boiler modifications and $800,000 for wood-handling equipment. A frontend loader pushes fuel from the storage pile to a live-bottom pit; a drag chain under the pile conveys the wood to a hog, which reduces the maximum size to 3" (7.6 cm). The fuel is then conveyed to surge bins, from which it is fed to the boiler by 12" (30.5 cm) augers.

Between 25 and 30 MW of the output of two 20 MW spreader-stoker boilers, designed in the 1950's to burn coal, is now produced by burning wood. Under some load conditions the wood fuel provides as much as 75% of the energy for the plant.

3. Cogeneration in Wood Product Plants

In a cogeneration system, high pressure steam is used to generate electric power in a turbine and the lower pressure steam from the turbine exhaust is then used as industrial process heat.

Studies of the economics of cogeneration in both the Tennessee Valley and the Pacific Northwest regions of the U.S. indicated that the best prospects for cogeneration systems were forest products industries which produce considerable wood waste and use large quantities of low-pressure steam in manufacturing processes. As electric power rates have increased in recent years, many wood products plants have installed cogeneration systems.

Hogged wood wastes are burned in a 600,000 lb/hr boiler at the Weyerhaeuser Company's pulp and paper mill at Columbus, Mississippi; two General Electric turbines produce 35 MW of power, which is used throughout the large mill complex. The Westvaco company burns 1,300 tons of bark and wood waste per day for power generation in a new $25 million boiler system at the Westvaco paper mill in Wickliffe, Kentucky. Two 100,000 lb/hour boilers burning mill residues supply steam to two 3.5 MW Westinghouse turbogenerators at the Kirby Forest Industries sawmill at Silsbee, Texas. Weyerhaeuser's sawmill and plywood plant at Wright City, Oklahoma, burns mill residues in a 120,000 pound-per-hour boiler to provide steam for a 5MW turbine generator.

In 1978 Weyerhaeuser agreed to sell an average of 54 MW of power, produced in cogeneration systems in three lumber mills in the Pacific Northwest, to nine aluminum and other metal-working companies; the power is distributed through the transmission system of the U.S. Department of Energy's Bonneville Power Administration (BPA).

BPA is assisting a number of lumber and plywood mills in the Pacific Northwest to plan cogeneration facilities. A group of four sawmills near Sandpoint, Idaho, is studying several cogeneration options, including a centrally located 15 to 35 MW facility which would utilize hogged mill residues from all four plants.

The California Energy Commission is assisting several California firms with cogeneration projects. The Big Valley Lumber Company of Bieber, California, which currently burns sawmill residues in a teepee burner with diesel fuel to produce steam for lumber drying, is building a new cogeneration system which will produce 30 million kWhr/year and 17 million pounds/year of process steam.

The Koppers Company is building a cogeneration facility at a wood-preserving plant in Sacramento which will burn up to 110,000 tons/year of mill and forest residues; the project will produce 42 million kWhr/year, which will be sold to Pacific Gas and Electric.

Many furniture companies and other wood-working plants burn wood residues for space heating or industrial process heat; a few of the larger plants have installed cogeneration systems. The Singer Furniture Company installed a 675 kW cogeneration system at its Lenoir, North Carolina, plant at a cost of $148,000; the system produces over 10 million kWhr/year, saves $118,000 per year in power costs, and paid for itself in 1.13 years.

4. Utility Plants Burning Wood Chips

Prior to the current interest in wood fuels, the harvesting of trees for the lumber and paper industries had been revolutionized by the development of "feller-bunchers" which shear off the trees at ground level and "grapple-skidders" which tow the trees to a loading or processing point. Since 1974 there has also been a rapid development of mobile units to produce wood chips in the forest.

The "whole tree chipper" feeds the trees to rollers and knives which convert them to 1/2" to 1" (1.3 to 2.5 cm) chips, which are blown into waiting trucks or

trailers, as shown below. Since this mechanized harvesting and chipping equipment was already commercially available, many of the industrial wood energy systems developed in the later 1970's in the U.S. were based on the use of wood chips.

One electric utility, the Electric Department of the City of Burlington, Vermont, has been using wood chips for power generation since 1977. Burlington is located near the heavily forested Green Mountains. Modern harvesting equipment and whole-tree chippers are widely used in the area to provide wood chips for the region's numerous pulp and paper mills. In 1977, faced with rapidly increasing fuel prices, Burlington Electric decided to experiment with the use of wood chips in one of the three boilers at its Moran Station. These boilers were designed to produce 100,000 pounds of steam per hour burning coal; each boiler feeds steam to a 10 MW condensing turbine. A vibrating mechanism was installed in the coal bunker to prevent bridging of the wood chips, four screw augers were added to control the fuel feeding, and an overfire air supply was blown through the chip chute to spread the chips evenly over the travelling grate. The initial boiler conversion is reported to have cost only about $25,000.

Due to the lower caloric content of the wood fuel compared to coal, the boiler's output dropped by 20 to 25% to around 70,000 pounds of steam per hour and the turbine rated at 10 MW produced only 7.0 to 7.5 MW. However, output was later increased to 8.5 MW by co-firing the wood chips with some fuel oil or natural gas. By 1980 a second boiler had been converted to wood fuel and the plant was burning 85,000 to 95,000 tons of wood per year.

The successful use of wood chips at the Moran plant led to a decision to build a new plant to generate 50 MW of power from 500,000 tons of wood chips per year. When it is in operation early in 1984, the Joseph C. McNeil Station will be the world's largest wood-fired thermal power plant. It will have a single boiler designed to produce 480,000 pounds of steam per hour at 1275 psig and 950°F (510°C). The single condensing turbine will use 410,000 pounds of this steam to produce 50 MW; excess steam may be used to increase electrical output to 59 MW or for the heating of

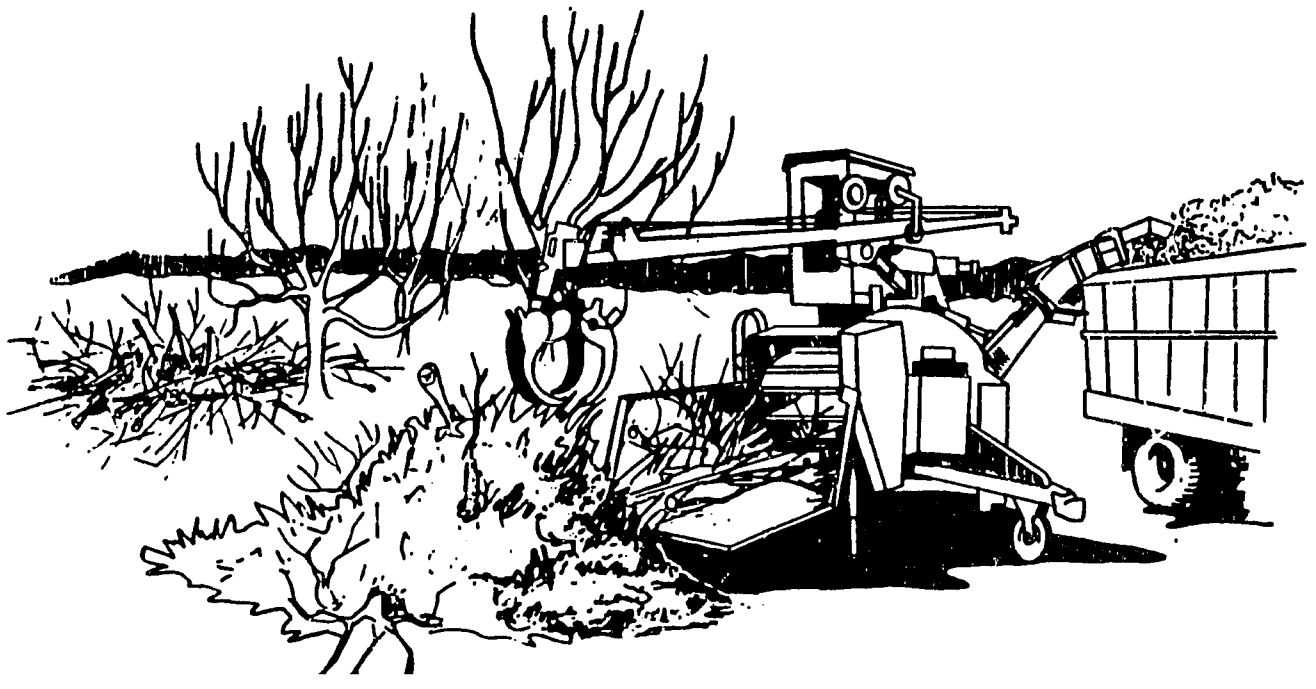

buildings at the adjacent campus of the University of Vermont.

The plans for the new plant have been based on a carefully developed system for the supply of wood chips. Most of the fuel will consist of whole tree chips produced by independent contractors working under long-term contracts with Burlington. Electric. A BE forestry contractor, JPR Associates of Stowe, Vermont, made compre- hensive studies of the harvesting system and developed a handbook for use by the chipping contractors. In 1980 BE hired a full-time professional forester to coordinate harvesting operations and supervise a new program providing free forest management services to Vermont landowners. If an owner decides on a timber stand improvement program with environmental thinning and whole tree chip harvesting, BE will supervise the operation to insure strict adherence to the owner's wishes.

Burlington Electric originally planned to supply the new 50 MW plant entirely by truck. However, a nearby town feared that the fuel truck traffic would greatly intensify traffic congestion, and the state utility regualtory agency required that 75% of the fuel be delivered to the new plant by rail. A collection yard is being established about 35 miles from the plant on a rail line near a major highway. About 80 trucks a day, loaded at forest chipping sites, will be unloaded at the collection yard by hydraulic dumpers. Large frontend loaders will reload the fuel into open-top rail cars. At the generating plant the rail cars will be moved onto an elevated trestle and dumped by opening doors at the bottom of each car. The use of rail shipping has greatly extended the area from which the plant will be able to draw fuel; Burlington Electric is now planning to build collection yards at other sites in order to draw fuel from areas up to 100 miles distant from the plant.

A smaller plant burning wood chips is planned in northern California's heavily forested area. The 11 MW plant will be built at Burney, California, by Ultrasystems, Inc., of Irvine, California. Fuel will be provided primarily by contractors trained by Ultrasystems to operate whole tree chipping equipment, although some logging residues will also be used. The California Energy Commission is providing a $1,000,000 grant to provide fuel handling facilities. The total plant will cost about $20 million; it will produce about 76 million kilowatt-hours per year.

Several factors have limited the economic and/or technical reasibility of the use of whole tree chips for power generation:

(a) Chipping equipment is rather expensive. The largest manufacturer of whole tree chippers, Mobark Industries of Winn, Michigan, makes a small chipper which takes up to 12" (30.5 cm) diameter trees and costs about $10,500 in the U.S. Mobark offers a package of three comparitively small machines for the harvesting and chipping of moderate diameter trees including a feller-buncher, a loader-skidder, and an intermediate size chipper; the equipment would produce from 100 to 150 tons of chips per 10-hour shift and cost about $130,000. Larger chip harvesters, with diameter capacities from 20" to 27" (51 to 68 cm) and maximum outputs from 450 to 1,000 tons per day, cost from $121,500 to $210,000 not including supporting machines.

(b) In addition to the harvesting and chipping costs, the delivered price of chips includes the purchase of the wood from the landowner and the transportation of the chips to the power plant. Due to these combined costs, the price of wood chips is always higher than the price of wood residues available at wood-processing mills.

(c) The most widely used harvesting and chipping equipment has been designed for large diameter trees and is not well suited for the harvesting of smaller trees and the collection of residues remaining from commercial logging. A number of new machines have been tested for harvesting small diameter trees, logging residue recovery, and/or steep terrain harvesting, but experience with most of these machines remains limited. Under present conditions, the havesting cost per ton of chips increases rapidly as the average diameter of the harvested trees decreases.

(d) Whole tree chips containing bark and leaves deteriorate much more rapidly in storage than clean, debarked chips. The Virginia Polytechnic Institute found that 20% of the energy in whole tree chips was lost through storage for 60 days in a 10' (3 m) high pile, although the loss dropped to 13% when the chips were stored in a 20' pile.

5. Plants Fueled From Energy Plantations

Another type of wood-fired power plant draws its fuel from plantations of fast-growing trees which are planted and harvested to support the power plant.

The U.S. Department of Energy has funded silvicultural research on short-rotation tree species at a number of universities and has sponsored studies of the organization and management of silvicultural energy plantations. However, no operational plantations of this type have been established in the U.S. An analysis by Envirosphere Company of Seattle, Washington, in 1981 indicated that the cost of electricity from power plants deriving their fuel from silvicultural energy farms in the U.S. would be about twice the cost of power from a coal-fired plant.

However, the economics of power generation through silvicultural energy plantations may be much more attractive in a developing country which has little or no coal production, rather low labor costs, and a climate suitable for producing fuelwood on very short (four to five year) rotations.

Many developing countries already have experience with the establishment and operation of fuelwood plantations; this experience was described in a 11-page review of "Growing Trees for Fuel" in the Bioenergy Systems Report published in December 1982. Most of these plantations have been designed to provide wood for domestic fuel or for charcoal production. However, the government of the Philippines is carrying out a major "dendrothermal" power program using wood from energy plantations of fast-growing Leucaena trees.

Except for fuelwood, 93 to 95% of the energy used in the Philippines must be imported. By 1979, after rapid oil price increases in the later 1970's, the annual Philippine oil import bill was almost $1.6 billion. Although rural electrification had a high priority, electric cooperatives could not afford the high price of diesel oil. After experiments conducted by the Ministry of Energy, the Philippine government concluded that power could be provided for these cooperatives through small wood-fired power plants.

Early in 1980 the Philippine government launched a major program to produce power from wood-fired plants supported by plantations of fast-growing trees. Forestry experiments had indicated that fuelwood could be produced rather rapidly by planting Leucaena leucocephala, a coppicing species known in the Philippines as "ipil-ipil". The typical power plant would produce 3 MW; the initial goal was to establish 70 plants producing a total of 200 MW by 1987. Each plant would be supported by a tree plantation of about 1,000 ha divided into 100 ha modules; each module would be planted and tended by an association of 10 to 15 farm families. Plants were to be located at sites which were close to the plantations, to existing power lines, and to sources of cooling water for the condensers of the steam plants.

This dendrothermal power program has been implemented since 1980 with substantial financial and technical assistance from French, British, and American agencies. By the end of 1981 27 plantations had been established on 25,000 ha. About twenty power plants are now under construction; half use French designs and equipment, while the other half are British systems. Two more of these plants are expected to be operational by the summer of 1983.

Participants in the international workshop on bioenergy projects for national development, held in the Philippines in March under the sponsorship of the U.S. Agency for International Development and the government of the Philippines, were given a tour of a nearly completed

dendrothermal power plant at Cape Boliano in Western Pangasinan. This visit provided information for a detailed profile of this typical dendrothermal project.

The 1100 ha plantation at Cape Boliano has been developed since 1980, when 310 ha were planted; 500 ha were added in 1981 and the remaining 300 ha were planted in 1982. The plantation is divided into eleven 100 ha modules; except one module owned by the electric cooperative, each module is leased and operated by members of 10 to 15 farm families who belong to an Integrated Service Association (ISA). The ISA members plant, tend, and harvest the trees on their module and sell the wood to the electric cooperative. During the first year before the trees close canopy, corn is intercropped between the young trees. The project includes 125 housing units for the 100 ISA families and for power plant personnel.

Like many of the dendrothermal plants, the Cape Bolinao plantations are on rather steep mountain slopes. Road building is difficult and expensive and leads to severe erosion during the rainy season. At Cape Bolinao a two-loop cable logging network connects the power plant with a loading point at each of the plantation modules. The trees are felled with chain saws, axes, or very sharp bolo knives and are cut into pieces averaging about one meter in length. The wood is then roped together in bundles; they are carried from the cutting site to the module's loading point by portable supplementary cables which feed the main cableway.

At the loading point the bundle is hooked to the main cableway and travels around the loop until it reaches an unloading zone near the power plant. The cableway system has a capacity of 12 to 15 tons per hour and will operate continuously every working day to provide the power plant with about 37,400 tons of wood per year. At some plantations the terrain is less steep and it is feasible to build roads and use trucks to transport the wood to the power plant. In other projects, cableways will be used to transport wood from some modules but roads will be built into other modules with less steep terrain.

On arrival at the plant the wood will be piled in storage yards where it will lose some of its initial moisture. The small diameter logs will then be conveyed to a wood crusher, to an extractor, and to a rotary dryer utilizing waste heat from the power plant boiler. The dried, pulverized fuel will be fed with air-swept stokers; some of it will burn in suspension and the rest will burn on a sloped, vibrating grate. The steam will be used in a condensing turbine-generator designed to produce 4,300 kW (4.3 MW) of power. The net power output of the plant is expected to be about 15 million kWhr per year.

The power plant at Cape Boliano will be owned and operated by the Pangasinan I Electric Cooperative Inc. (Panelco I) which provided 486,000 kWhr of power in 1982 to 14,000 households in the nine towns and 194 barangays of its service area. The power plant equipment was supplied by Alsthom Atlantique of France; loans from the French government and a French commercial bank provided about half of the total cost of the project which was 46 million pesos ($4.1 million). Cost components included 4.5 million pesos for the tree plantation, 4.4 million pesos for the wood transport system, 28 million pesos for the power plant, 6.4 million pesos for the site and administrative facilities, nearly one million pesos for design and supervision, and nearly two million pesos for working capital. The total investment cost was 13,646 pesos ($1228) per kilowatt.

The Cape Bolinao plant is the first to be completed of about ten dendrothermal plants to be built with French technology and partial Franch financing. Up to ten additional dendrothermal plants are being built with British technology and financial assistance. These plants, built by the Towler Company, will burn stick wood in old-fashioned solid fuel boilers. At least one of these plants is scheduled to be on line in the summer of 1983.

Several other developing countries have expressed interest in dendrothermal power projects. In Thailand a team of energy experts convened by the National Resarch Council in 1982 recommended that an unused

5 MW thermal power plant be converted to a dendrothermal plant supplied by a fuelwood plantation. A Indonesian firm has requested assistance from the U.S. Agency for International Development with a feasibility study for a wood-fueled power plant in Sumatra. The plant would be located on a 8,000 ha tract which is being developed as a palm oil plantation; 1,000 to 2,000 ha would be planted with fast-growing trees to provide fuel for power generation.

6. Power From Agricultural Residues

Bagasse, the residue remaining when sugar is pressed from sugar cane, is burned as a boiler fuel in most sugar mills; many of the mills have high-pressure boilers and use the team for electric power generation. Sugar mills contribute significantly to the national power grid in some sugar-producing countries, but the potential for power generation with bagasse has not been fully developed in a number of other countries.

Although rice hulls are the most abundant agricultural residue in many developing countries, the high silicon content of the hulls leads to ash fouling and slagging problems in combustion and gasification units. However, some firms have apparently been able to overcome these problems. The Ray Burner Company of San Francisco is supplying a system which will provide 315 kW of power through the direct combustion of rice hulls at the National Food Authority's facility at Cabanatuan in the Philippines. The system will include a 10,350 lb/hour packaged biomass boiler, a non-condensing turbine generator system, boiler feed system, fuel handling equipment, an ash collection system, and a standby oil burner. About 30 gallons of diesel oil will be used daily for combustion start-up; the unit will burn about 1.5 tons of rice hulls per hour. The payback period for the system is expected to be 2.56 years, without considering the use of exhaust steam for drying. The project is being developed with the assistance of the U.S. Agency for International Development.

Jaoudi Industrial and Trading Corporation of San Joaquin, California, is building a $6.4 million cogeneration facility at a large feed lot and feed mill. Poultry litter and rice hulls will be burned in a fluidized bed combustion unit which should avoid slagging and incomplete combustion problems due to the high ash and moisture content of these residues. The facility is expected to produce up to 7.5 MW of power for sale to Pacific Gas and Electric as well as process heat for the feed mill. All of the California projects described in this section are assisted by the California Energy Commission.

Farmers Cooperative Gin, Inc. of Buttonwillow, California, is burning cotton gin trash in a cogeneration system with a cyclonic suspension-fired furnace and a 42,000 lb/hour boiler. The system was designed to produce 11 million kWh/year of electricity as well as process heat for cotton drying. Some slagging problems were encountered in shakedown tests during 1982.

On the Hawaiian island of Molokai, the Molokai Electric Company formerly used small diesel-powered generators to meet the islands average load of 3,600 kW. Now straw, pineapple wastes, wood chips, and waste paper are burned in a new power plant with a 40,000 lb/hour boiler and a 4,000 kW condensing steam turbine. Half of the fuel is straw, delivered in wired bales by a large ranching company; after removing the wire, the straw is chopped into pieces no larger than 3". Some size reduction is also necessary for other biomass fuels. There have been some problems with fuel feeding and furnace puffing, and some modifications in the system are anticipated.

Harp Energy, Inc. is designing a 4.8 MW cogeneration facility in Madera, California, which will burn 37,000 tons per year of prunings from nearby vineyards. The prunings will be collected by modified versions of commercially-available forage harvesters. During the four-month fruit packing season, the plant will sell steam to a packing company and will sell 3.8 MW of power to Pacific Gas and Electric. During the rest of the year the plant will produce 4.8 MW for sale to PG&E. The $5.5 million project is expected to produce 26 million kWhr/year.

Tri Valley Growers, Inc., a large agricultural cooperative, has operated a 4.5 MW biomass cogeneration facility at a large cannery near Modesto, California, since 1981. The facility burns fruit pits, nut shells, and other residues generated by the canning operation. New equipment is being added to permit the burning of orchard prunings, forest slash, and urban wood waste.

Superior Farming Company of Bakersfield, California, has recently completed a 5.5 MW cogeneration facility which will burn 47,000 tons per year of a biomass mixture consisting of 79% chipped orchard prunings and 21% almond shells. The $7 million facility is expected to produce 26 million kWhr annually.

Basin Electric Cooperative is burning 30% sunflower seed hulls along with 70% lignite from a nearby mine in a 50 MW power plant near Velva, North Dakota.

RENEWABLE ENERGY CONFERENCES

Third International Symposium on Anaerobic Digestion, Boston, Massachusetts, August 14-20, 1983. Contact: Ralph L. Wentworth, International Symposium on Anaerobic Digestion, 99 Erie Street, Cambridge, Massachusetts 02139, USA.

Solar World Congress, International Solar Energy Society, Perth, Australia, August 14-19, 1983. Contact: Coordinator, Solar Congress 1983, P.O. Box X2275, Perth W.A. 6001, Australia.

Industrial Wood Energy Forum '83, Nashville, Tennessee, September 19-21, 1983. Contact: Forest Products Research Society, 2801 Marshall Court, Madison, Wisconsin 53705, USA.

Waterpower '83: International Conference on Hydropower, Knoxville, Tennessee, September 18-21, 1983. Contact: Dept. of Conferences, University of Tennessee, 2019 Terrace Avenue, Knoxville, TN 37996, USA.

Sixth Miami International Conference on Alternative Energy Sources, Miami Beach, Florida, December 12-14, 1983. Contact: Clean Energy Research Institute, University of Miami, P.O. Box 248294, Coral Gables, Florida 33124, USA.

PUBLICATIONS

Biomass Gasification in Developing Countries, by Gerald Foley and Geoffrey Barnard, 1983, 173 pp. Earthscan, 10 Percy Street, London WIP ODR, U.K., or 1318 F St. N.W., Washington, D.C. 20004.

Engineering and Economic Charactistics of Commercial Wood Gasifiers in North America, by Robert Hodam & Associates, 1982, 81 pp. Solar Energy Research Institute, 1617 Cole Boulevard, Golden, Colorado 80401 USA, $11.50.

Evaluation of Biomass Systems for Electricity Generation, by Battelle Columbus Laboratories, 1982, 172 pp. Electric Power Research Institute, 3412 Hillview Avenue, Palo Alto, California 94304 USA.

Common Fuelwood Crops: A Handbook for Their Identification, by Elbert L. Little, Jr., 1983, 354 pp. Communi-Tech Associates, Box 3170, Morgantown, West Virginia 26503 USA, $13.50.

Energy From Forest Biomass, International Union of Forestry Research Organizations, 1982, 273 pp. Academic Press, 11 Fifth Avenue, New York 10003 USA, $27.50.

Simple Technologies for Charcoal Making, 1983, 154 pp., Forestry Department, Food and Agriculture Organization of the United Nations, Via delle Terme di Caracalla, 00100, Rome, Italy.

REQUEST FOR INFORMATION

Information is needed for the next Report in this series on projects using agricultural residues (especially rice hulls, bagasse, and coconut residues) in direct combustion or gasification systems. Institutions involved in such projects are urged to send reports on them to the Editor at the address indicated on page 1.