PN-AAN-303

ISN = 30064

a361406/17

EVALUATION OF THE AMERICAN RICE MILL PARBOILING PLANT AT SETSAN, RANGOON, BURMA

MAY 1983

STONE & WEBSTER ENGINEERING CORPORATION

EVALUATION OF THE

AMERICAN RICE MILL

PARBOILING PLANT

by

David Spencer

May 1983

Approved by: Project Engineer

Division Head

Engineering Manager

"This report was prepared with the support of the U.S. AID. However, any opinions, findings, conclusions, or recommendations expressed herein are those of the author(s) and do not necessarily reflect the views of U.S. AID. Neither U.S. AID, nor Stone & Webster, nor any person acting on behalf of either; (a) Makes any warranty or representation, express or implied, with respect to the accuracy, completeness, or usefulness of the information or that the use of any information, apparatus, method or process disclosed in this report may not infringe privately owned rights; or (b) Assumes any liability with respect to the use of or for damages resulting from the use of, any information, apparatus, method or process disclosed in this report."

Copyright 1983
Stone & Webster Engineering Corporation
Boston, Massachusetts

FINAL REPORT

SWEC J.O.No. 14003.08
U.S. AID Contract No. OTR-1406-I-00-1142-00

Evaluation of the American Rice
Mill Parboiling Plant

at

Setsan, Rangoon, Burma

May 10, 1983

Stone & Webster Engineering Corporation
Boston, Massachusetts, U.S.A.

TABLE OF CONTENTS

Section	Title	Page
	EXECUTIVE SUMMARY	iii
1	INTRODUCTION	1-1
2	RICE PARBOILING SYSTEM OPERATION	2-1
3	OPERATIONAL COMPONENTS OF THE SYSTEM	3-1
3.1	RECEIVING WEIGHING AND CLEANING	3-1
3.2	STEEPING	3-1
3.3	STEAMING	3-1
3.4	DRYING AND STORING	3-2
4	RECOMMENDATIONS FOR SYSTEM OPERATIONAL IMPROVEMENTS	4-1
4.1	EQUIPMENT	4-1
4.2	OPERATIONAL PROCEDURES	4-2
5	MAJOR EQUIPMENT STATUS REPORT	5-1
5.1	PRECLEANER	5-1
5.2	AUTOCLAVE	5-1
5.3	DRIERS (3)	5-2
5.4	DRIER FANS (3)	5-2
5.5	BOILER	5-3
5.6	HUSK FURNACE/HEAT EXCHANGER FOR SHANZER DRIERS	5-4
5.7	INSTRUMENTATION	5-5
5.8	MISCELLANEOUS SYSTEMS	5-6
6	COMPONENT STATUS REPORT BY FUNCTIONAL GROUP	6-1
6.1	VERTICAL PADDY ELEVATORS	6-1
6.2	HORIZONTAL CHAIN LINK CONVEYORS	6-1

TABLE OF CONTENTS (Cont)

Section	Title	Page
6.3	MOTORS, SPROCKETS AND GUIDE BEARINGS FOR CONVEYORS AND ELEVATORS.	6-2
6.4	POWER DISTRIBUTION PANELS AND ASSOCIATED ELECTRICAL DEVICES.	6-2
6.5	FAN (1) SUCTION FOR ROTARY CONVEYING DRIER	6-3
7	CONCLUSION	7-1
8	FIGURES.	
	1. Autoclave steam feed distribution pipe 2. Boiler steam outlets - superheated & saturated 3. Fire grate tending ports	
9	APPENDIX	
	A. Precleaner B. Autoclave Rotary Valve C. Fan characteristic data sheet D. Existing Physical Facility Arrangement and Existing and Proposed Operational Flow Chart E. Shanzer Drier F. Conveyors and Elevators	

EXECUTIVE SUMMARY

The work documented in this report was performed by Stone & Webster Engineering Corporation (SWEC) under contract to the United States Agency for International Development (U.S. AID). Indefinate Quantity Contract No. OTR-1406-I-00-1142-00 and PIO/T No. 498-0249-3-6431037 are U.S. AID contract and work order numbers which authorized a SWEC Engineer and Consultant to ascertain steps to be taken to make the American Rice Mill rice parboiling facility operational. The facility is under the jurisdiction of the Agricultural Farm Produce and Trade Corporation of Burma (AFPTC) which provided assistance in the in-depth examination of the parboiling facilities equipment and valuable observations on the limited plant operation history.

The results of an in-depth equipment examination is provided in the Major Equipment Status Report Sections 5 through 5.8 of this report. Recommended system operational improvements are documented as Equipment or Operational Procedure improvements in Section 4.1 and 4.2, respectively. Sections 5 through 5.8 and 4.1 and 4.2 comprise the basis of a comprehensive course of action to lead to full commercial operation of the rice parboiling plant.

This report concludes that with implementation of the recommended process and equipment improvements, the American Rice Mill will be capable of achieving its original design capacity of 60 metric tons per day of export quality parboiled rice. The cost of the recommended refurbishment and improvements will be a small fraction of the cost of a new facility of equal capacity and product quality.

SECTION 1

INTRODUCTION

This final report is the result of an April 1 through April 12, 1983 evaluation survey of the American Rice Mill parboiling plant at Setsan, Rangoon, Burma. A recommended course of action to lead to full commercial operation has been incorporated into this report.

The plant is operated by the Agricultural Farm Products Trade Corporation, which provided assistance in the overall evaluation. The evaluation and recommendations regarding renovation and improvement of the parboiling plant was made possible through an agreement between the Government of Burma, the United States Agency for International Development (USAID) and Stone & Webster Engineering Corporation (SWEC).

SECTION 2

RICE PARBOILING SYSTEM OPERATION

BASIC DESCRIPTION OF THE RICE PARBOILING SYSTEM

The parboiling system of this plant is the Malek (American) process composed of 4 basic operational sections. These sections are (1) receiving, weighing, and cleaning, (2) steeping, (3) steaming, and (4) drying and storage. The basic components of the plant are in good physical condition and can be restored to operation through some equipment replacement and rehabilitation. The system has only operated for about 90 days since its completion some 25 years ago. System operation was probably discontinued due to failure of the inlet and outlet rotary valves of the autoclave steaming unit. The valves meter the steeped paddy into and out of the autoclave. Following shutdown of the plant in 1975, some deterioration has occurred in the handling system and driers. Belts from elevators and other components have been removed to be used in other places or for repair of other elevators. The necessary renovation of the handling equipment of the plant is discussed in the "Component Status Report by Functional Grouping" Sections 6.1 and 6.2 of this report.

Diagrams showing the existing physical facility arrangement and the existing and proposed operational flow charts are attached as Appendix D.

2

SECTION 3

OPERATIONAL COMPONENTS OF THE SYSTEM

3.1 RECEIVING, WEIGHING, AND CLEANING

Receiving at the plant is at the rate of approximately 100 metric tons per day. Receiving rates can be 8 to 10 metric tons per hour with receiving directly through the cleaning-weighing section to the steeping section or through a holding bin at the receiving point to the steeping section. Paddy is received at the plant in bags of unknown size and weight.

The major components of this unit are essentially sound with the exception of the precleaner. The precleaner has been used longer than the 90 day operating service life of the parboiling plant. The precleaner now in the plant would not be dependable in continuous operation and should be replaced. An enclosed seive aspirator cleaner with dust discharge attachment is recommended. A Carter-Day Screen Machine, Model 8-950, is a type that will provide adequate cleaning for this plant.

Manufacturer's literature with performance characteristics of this machine are indicated in Appendix A.

3.2 STEEPING

The steeping unit consists of 5 tanks (vats) capable of holding 14 metric tons of paddy each. Flow rate through the steeping section is slightly greater than the capacity of the autoclave. Approximately 2 hours are required to fill each tank, 8 hours for steeping, plus 2 hours for emptying, for a total of 12 hours to steep 14 metric tons. The 5 tanks can produce 70 plus metric tons each 12 hours which is equal to the rated capacity of the plant.

The sun dried paddy, at 12 to 14 percent moisture content, is placed in the steeping tanks. About 5 metric tons of water at 180°F is introduced into the paddy which should saturate at approximately 35 to 37 percent water. Saturation requires about 8 hours under these conditions. Saturation time could be reduced by maintaining higher water temperatures. However, since this unit meets plant requirements, there appears to be no reason to recommend changes in this procedure.

3.3 STEAMING

Steaming the saturated paddy in the autoclave gelatinizes the starch. This process changes the starch from a crystalline to an amorphous form. Gelatinization causes the starch to become fused and the grain more resistant to breakage in the milling process, thereby increasing product quality and yield. Steaming varies

from 2 minutes to 30 minutes, depending on steam temperatures, quantities of paddy in a batch and desired color. This system has operated at a flow rate of 6 metric tons per hour with 15 minute retention time in the autoclave at 20 psi. The system produces "red" colored rice which is probably caused by long exposure and superheated steam temperatures. The use of superheated steam can cause increased discoloration in parboiled rice. A change in steam source from the superheater to the saturated section of the boiler is recommended. Refer to Figure 2 for a schematic of the proposed change.

Steam is also injected into the paddy at the bottom of the autoclave in a relatively short time period. This method of injection may cause additional discoloration due to excessive steam coming into contact with small amounts of paddy.

The proposed revision to the steam piping system will uniformly distribute the steam from top to bottom of the autoclave as indicated in Figure 1.

The inlet and outlet rotary valves used to control flow of paddy through the autoclave are worn to the point that they cannot be used. The failure of these valves significantly contributed to discontinued plant operation.

It is recommended that these valves be replaced with ones that will operate at steam pressures up to 15 psi. An experienced supplier for these valves is Kice Metal Products Co. Inc. Refer to Appendix B for manufacturer's information.

3.4 DRYING AND STORING

The drying units in the system are one rotary conveying drier using ambient air and three non-mixing column driers. The rotary conveying drier flow rate equals the autoclave capacity at 6 metric tons per hour. The total holding capacity of the columnar driers is slightly over 6 tons including the garner bin. However, drying can be done by employing the cutoff damper that closes off one half of the plenum of the driers. Filling this half section requires about 20 minutes and drying can commence after this length of time reducing additional discoloration that will occur by allowing hot paddy to remain static with no air flow through it. Consequently, the driers as they are designed, should not contribute to reducing quality of the grain, provided drying starts as soon as possible after steaming.

When this plant was designed in the mid 1950's, it was generally believed that rice paddy should be cooled to about 140°F immediately after steaming. However, recent parboiling techniques indicate air temperatures do not influence milling yields until the moisture content of the grain drops below 16 to 18 percent. High temperatures tend to darken rice color, which,

however, can be compensated for by decreasing autoclave steaming retention time.

Raising the temperature of the air in the rotary drier would increase drying rates substantially. It is recommended that the air temperatures be raised to 180 to 200°F in the rotary drier and approximately the same temperature in drier D-1 (see the flow chart in Appendix D). Retention time in the driers should be adjusted to a rate that will not allow grain discharge temperature to exceed 110 to 112°F. The paddy should be placed in tempering storage after drier D-2, then returned to drier D-3 about every 12 hours until dried to about 14 percent moisture content. Retention time in drier D-3 should be on the order of 15 minutes with air temperatures adjusted to prevent grain temperatures exceeding 110-112°F.

Typical Shanzer drier manufacturer literature is included as Appendix E.

The elevator (designated E-10) and the conveyor (designated LC-4) are shown on a schematic in Appendix D. Appendix F includes elevator and conveyor manufacturer's information.

The change in operational procedures for drying and multipass operation of drier D-3 should substantially increase the efficiency and reduce heat requirements for drying.

A problem also exists in filling the driers. Using the current duct arrangement, the drier columns do not fill completely, causing loss of the drying air above and not through the grain.

It is recommended that the ducts be directed to vertical downward discharge into the garner bins. Should poor grain distribution still exist, the column screens should be blocked by cover plates to force the air through the grain.

The basic drier units (Berico/Shanzer) are in good condition. Temperature instrumentation additions are noted in the Major Equipment Status Report - Instrumentation Section 5.7 of this report.

SECTION 4

RECOMMENDATIONS FOR SYSTEM OPERATIONAL IMPROVEMENTS

4.1 EQUIPMENT

- Replace the precleaner with an enclosed sieve aspirator type such as the Carter-Day Screen Machine, Model 8-950. Description of this machine is provided in Appendix A.

- Replace the steam distribution piping in the autoclave with piping that will release steam uniformly into the paddy from top to bottom of the steamer as indicated in Figure 1.

- Replace rotary inlet and outlet valves which meter paddy into and out of the autoclave. A recommended manufacturer of this equipment is Kice Metal Products as indicated in Appendix B.

- Add a scraper conveyor above the tempering bins capable of conveying 30 TPH. A satisfactory conveyor is a 9-inch Peerless as manufactured by the Essmueller Co. as indicated in Appendix F.

- Add fire tending ports to the side walls of the husk furnace as indicated by Figure 3.

- Change the steam source from the superheater section of the boiler to the saturated section as indicated in Figure 2.

- Add a centrifugal discharge elevator with a capacity of 30 TPH. A satisfactory elevator is manufactured by Green's Hardware and Machinery Company as indicated in Appendix F.

- Replace and reroute the drier inlet feed pipes which distribute paddy at the drier inlet chambers (garner bins). The final 2 ft of the feed pipe must drop vertically to the centerline of the garner bin. If the paddy cannot be distributed evenly such that air does not bypass the paddy at the drier top, blanking plates will be required. These 10 gauge plates would cover the areas where paddy would not flow due to its inherent angle of repose.

- Replace the tempering air damper drives with pneumatic power positioners and install a compressor system as indicated in the Major Equipment Status Report - Instrumentation Section 5.7 of this report.

- Provide a hot air duct to the rotary conveying drier to provide hot air to this unit from the #D-1 drier plenum.

- Replace the axial vane fan and flue gas breeching from the husk furnace with a new fan, tempering air arrangement, and improved duct arrangement which will tie into the existing boiler flue gas stack.

4.2 OPERATIONAL PROCEDURES

- Reduce steam temperature in the autoclave by switching to a saturated steam source of 15 psig. This change is shown in Figure 2.

- Use driers D-1 and D-2 in series as continuous flow driers with rice grain discharge at 110°F to 112°F maximum.

- Use drier D-3 as a multipass continuous flow drier with intermittent tempering of about 12 hours in the tempering/storage bins.

- Reestablish the milling laboratory with air conditioning as a means of quality control. This laboratory should be equipped as indicated in the Major Equipment Status Report - Miscellaneous Systems - Test Instruments Section 5.8 of this report.

1

SECTION 5

MAJOR EQUIPMENT STATUS REPORT

5.1 PRECLEANER

Type - Two-stage vibrating screen with aspirator

Manufacturer - S. Howes Co. England

Instrumentation - None

General Condition - The machine exhibits wear, localized distortion and a general lack of inherent ruggedness. The design relies on exposed belt drives and has several wooden structural sections. The aspirator draws air externally in the general area of the screens and thereby is relatively ineffective. A large portable room fan has been required to reduce ambient dusting. Replacement is recommended with a modern sealed precleaner.

Deficiencies Requiring Repair or Replacement:

- Replace the precleaner.
- A recommended replacement unit is indicated in Appendix A.

5.2 AUTOCLAVE

Type - Pressure vessel sealed by variable speed rotary feed inlet and outlet valves

Manufacturer - Unknown - possibly locally fabricated from rolled plate, conical and cylindrical sections.

Instrumentation - One pressure gauge and one safety valve

General Condition - Functional capability as a 25-30 psig pressure vessel appears adequate. The exterior surface was excellent and the interior surface has only minor scaling, red iron oxide and minor sludge indication. The safety valve is a spring loaded disc type which leaks excessively. The Fisher pressure reducing valve has never been set up for operation. Pressure control has been by local hand operated bypass valves. The rotary inlet and outlet valves are not suited for 20 psig steam service. Excessive steam gouging on the rotary cone section and excessive leakage to ambient was noted. The center steam feed distribution pipe has been altered but is still not of optimum design. Improved steam distribution piping is indicated in Figure 1.

Deficiencies requiring repair or replacement:

- Replace safety valve with a unit which will thread directly to the available threaded nipple

- Purchase two new pressure gauges and install one in full view of the local steam pressure reducing station and one at the elevation of the discharge rotary valve

- Replace the Fisher Governor control valve with a new unit and set it up for automatic pressure regulation of 15 psig downstream pressure

5.3 DRIERS (3)

Type - Vertical column non-mixing

Manufacturer - Shanzer Co., San Francisco, Ca. U.S.A.

Instrumentation - None

General Condition - Screens and casing are in excellent condition. The adjustable air distribution vanes (baffles) and the outlet rotary screw conveyor, motor and gear drives are in very good condition. The only noted area requiring improvement were the paddy inlet pipes at the top of the driers. The pipes do not distribute the paddy uniformly. The piping is further discussed in the "Recommendations for System Operational Improvements" section of this report.

Although the Shanzer drier is no longer manufactured by Berico Industries (BI) representatives of BI familiar with this style drier were very optimistic on its capabilities. It was indicated that with the recommended drier tempering cycle implimented there should be plenty of drying capacity available. Typical Shanzer drier manufacturer's literature is indicated in Appendix E.

Deficiencies Requiring Repair or Replacement:

- The geometry and arrangement of the paddy transport pipes to the heater inlets (top of heaters) is deficient for uniform paddy distribution. Specific recommendations to redistribute the flow are contained in the "Recommendations for System Operational Improvements" Section 4.1 of this report.

5.4 DRIER FANS (3)

Type - Centrifugal fan, conical side inlet, center scroll outlet.
Manufacturer - Berico (Shanzer) Co. San Francisco, Co. U.S.A.

Instrumentation - Air outlet temperature (air inlet temperature minus any atmoshperic tempering air as available from the husk furnace air discharge duct.

General Condition - Fans appear to be in excellent condition although internal inspection was not possible. However, the motor drive base plates indicate numerous alterations although they appear adequate for the 20 hp motors installed for two of the three fans (one fan has no motor). Engineering calculations indicate the fan motors are sized properly to provide 60,000 cfm per dryer flow rate against the expected system resistance.

A fan characteristic data sheet has been provided as Appendix C. The data sheet is for the size 125 fan but covers design 5 rather than design 10 (design 10 sheet is not available). Berico Industries indicated the data sheet values will very closely agree with the fan performance for the American Rice Mill fans.

Deficiencies Requiring Repair or Replacement:

- Replace all three fan motors with new 20 hp units, vee belts need replacement, motor base plates need replacement, grouting and secure anchor bolts should be provided.

5.5 BOILER

Type - Fire tube with integral superheater

Fire box - Bricked skin cased with hand fired grate to burn rice husks.

Manufacturer - B.R. Wolf Germany

Instrumentation - None

Safety Valves - One disassembled on saturated section

General Condition - The water side was in good condition with acceptable quantities of light scaling, red iron oxide, and minor chemical deposition. No significant pitting was noted. The fireside was in good condition with minor corrosion and soot deposition. The tube sheets were sound and tube sheet integrity appears adequate. The firebox grating was missing but the refractory and skin casing were in good condition.

Deficiencies Requiring Repair or Replacement:

- The saturated section safety valve requires replacement. The superheater section safety valve has been removed and blanked off. A replacement safety valve should be purchased, installed and the discharge piping run to a safe location. Presently the saturated steam outlet passes thru a globe isolation valve to the superheater inlet ring header. Therefore all steam output is superheated. Since this is not satisfactory for proper autoclave operation, the present globe valve should be

10

removed and replaced with a manifolded arrangement to allow independent selection of saturated or superheated steam. Figure 2 indicates the present and proposed arrangement of the boiler superheated and saturated steam outlets.

- Provide fire grate tending port every 2 feet along the side of the furnace. This will require removal of skin casing, and boring of 4 inch holes thru the double course brick work. This will allow 90 percent of all grating tending to be accomplished away from the high radiant heat zone directly below and behind the grating.

  Figure 3 indicates the proposed arrangement of fire tending ports.

5.6 HUSK FURNACE/HEAT EXCHANGER FOR SHANZER DRIERS

Type - induced draft, automatic feeder, hand tended stoker

Manufacturer - Kampnager - Germany

Instrumentation - Outlet air temperature monitor

General Condition - Furnace zone brickwork and skin casing is in very good condition. The variable volumeteric rice husk feeder appears in very good condition. The cast plate fire grates were in excellent condition although 10 percent were missing. However, spare grating was indicated to be available locally. The cast iron finned heat exchanger modules were in good condition, however, the first several modules (nearest to the fire grate) have pulled loose from their mounting plates and dislodged their high temperature retort cement. This allows bypassing of flue gas and soot to the air passage associated with the Shanzer drier D-1. The flue gas breeching, stack and induced draft axial vane fan were inaccessible for detailed observation. The breeching and stack pass within inches of the bottom chord of a wooden roof truss. Several feet of the truss are badly charred. If the husk furnace is fired, a 10 foot section of the bottom chord must be replaced by back to back steel channels with rigidly through bolted splice plates. These channels would also provide a basis to guide an improved stack arrangement.

Deficiencies requiring Repair or Replacement:

- Replace the missing 10 percent of cast plate grating
- Remount several cast iron heat exchanger modules and seal joints with high temperature retort cement
- Replace portion of heat damaged roof truss with steel channels

5.7 INSTRUMENTATION

The following is an outline of the recommended control and instrumentation equipment needed for proper rice process monitoring and adjustment.

1. Tempering Air Damper Drives - The present electric motor driven screw feed damper positioners should be replaced by pneumatic power cylinders. The power air would be controlled by E/P signal converters. New temperature sensor instruments will provide the input signal to the converters. Tempering air dampers are provided at each dryer fan inlet (3) and in the husk furnace flue gas breeching.

2. Thermal wells and 0-250°F dial thermometers should be installed at the following locations.

   - Steeping tanks (3)
   - Dryer fan discharge (3)
   - Autoclave (3)
   - Paddy discharging from heaters (3)
   - Husk furnace hot air distribution duct (1)
   - Heated Water Bin (1)

Thermal wells and 0-350°F dial thermometers should be installed at the following locations.

   - Husk furnace flue gas breeching (1)
   - Superheater outlet from the boiler (1)
   - Superheated Steam at the direct contact water heating bin (1)

3. Pressure monitoring gages 0-50 psig gages should be installed at the following locations.

   - Autoclave (2)
   - Saturated section of boiler outlet (1)
   - Superheated steam at the water heating bin (1)

4. A skid mounted compressor with receiver, dryer section, and dessicant is required to provide air to the air power positioners mentioned in Section 1. The compressor system will also supply compressed air to clean out and dry out electrical equipment as needed.

5.8 MISCELLANEOUS SYSTEMS

Well water - It has been indicated that the single 2 inch diameter tube well is inadequate based on past operating experience. Plant personnel have recommended a 4 inch diameter tube supplement the existing tube and a second 4 inch tube be sunk in adjacent aquifer.

Platform and Stairway Landings - All existing operating platforms, catwalks, stair landings and any other horizontal walking surfaces should have toe plates installed. These plates should be run inside existing handrail stantions and welded to the stantions. These plates will prevent personnel from sliding over the edge in case of a fall on the "iron" wood stair treads and walkway surfaces.

New Maintenance Work Platforms and Access Ladders - Several of the elevators have their motor driver on the top end. It is desirable to install small work platforms and install steel ladders guided off the timber roof trusses. Also a permanent steel ladder is required to reach the catwalk to the tempering bins.

Insulation - No tank, autoclave, steam or hot water line insulation has been provided. All steam and hot water lines should be insulated, for personnel burn protection, heat conservation, and to reduce the ambient air temperature. The autoclave also merits insulation because of its size and close proximity to work stations. The steeping tanks (5) entail far more surface area and will be subject to valve packing leaks etc. which may prohibit maintaining effective insulation. Therefore insulation of the steeping tanks (operating temperature 180°F) is not currently justifiable.

Electrical - As discussed in "Component Status Report by Functional Grouping - Section 4" all electrical components except motors require replacement for the reasons cited. An indoor lighting system should be installed to provide reasonable night time illumination inside the building.

Documentation - Presently there are no engineering drawings, manufacturer's instruction manuals, data sheets, operating procedures or any substitute written documentation. To reach and maintain a consistantly good operational status will require preparation of at least some plant specific operating and maintenance procedures aided by piping and instrument drawings marked up to reflect proper operating parameters.

Test Instruments - To adequately start up the plant the following minimum test instruments are required:

- Several powerful flashlights.

- Portable dielectric moisture meter.
- Several magnetic based thermometers.
- Several laboratory glass stem thermometers.
- Several spare 0-50 psig pressure gages.
- One 1/8 inch Dryer ASME pitot tube.
- One long probe ASME pitot tube.
- One U tube manometer.
- One 0-2 inch w.g. magnahelic gage.
- One "mini-mite" potentiometer and T/C lead wire.
- Dockage tester.
- Water quality testing kit.
- Rice sizing device.

Fire Protection System - A sprinkler system should be installed to protect the roof trusses, work platforms and stair treads from combustion. Fire base stations should be established near the Precleaner, Husk Furnace/Boiler and Autoclave.

SECTION 6

COMPONENT STATUS REPORT BY FUNCTIONAL GROUP

6.1 VERTICAL PADDY ELEVATORS

Manufacturer - Foote Brothers Gear and Machine Co., Chicago Il, U.S.A.

General Condition - Housings sound, in general belts, buckets and tensioning devices appear sound.

Elevator Location Table

Location	Approximate Belt Length	Replace Belt Yes	Replace Belt No
Receiving Bin	80 ft		x
Precleaner	100 ft	x	
Weighting Bin	100 ft		x
Steeping Tanks	100 ft		x
Autoclave	100 ft		x
Drier #1	120 ft	x	
Drier #2	120 ft		x
Drier #3*	120 ft		x
Tempering Bin**	100 ft		x
New Tempering Bin***	100 ft		x

General Comment. Several spare belts were in storage under the tempering bins. However, Foote Brothers is no longer in business, and replacement parts appear to be unavailable. A source of alternate supply has been indicated in Appendix D. This source is capable of supplying the New Tempering Bin elevator as discussed in the "Recommendations for System Operational Improvements" Section 4 of this report.

6.2 HORIZONTAL CHAIN LINK CONVEYORS

Manufacturer - Foote Brothers Gear and Machiner Company, Chicago, IL, U.S.A.

General Conditions - Housings sound, chain links in good condition.

Conveyor Location Table

Location	Approximate Track Length	Replace Yes	Replace No
Receiving Bin (Bottom)	30 ft		x
Steeping Tanks (Top)	100 ft		x

Location	Approximate Track Length	Replace Yes	Replace No
Steeping Tanks (Bottom)	100 ft		x
Autoclave (Bottom) - Auger feed*	30 ft		x
Drier #3 to Tempering Bins (Top)**	100 ft		x
Tempering Bins (Bottom) - Two	60 ft		x
Tempering Bin to Dryer #3 (Bottom)***	140 ft		

*Lower through rusted-through requires replacement.

**Double level chain on top for 2/3 distance then dumps into auger for last 1/3 trip to tempering bins.

***Proposed additional conveyor (70 ft) to allow tempered rice (12 hours) to be routed to drier #3.

General Comment. As noted in Section 1, Foote Brothers is no longer in business, and conveyor replacement parts appear to be unavailable. A source of alternate supply has been indicated in Appendix D. This source is capable of supplying the Tempering Bin To Drier D-3 conveyor as discussed in the "Recommendations for System Operational Improvements" Section 4 of this report.

6.3 MOTORS, SPROKETS, SHAFTS CHAINS, AND GUIDE BEARINGS FOR CONVEYORS AND ELEVATORS

General Condition - Good

Motors

- Remove motor - general cleanup for improved cooling
- Bench test continuity
- Test operate

Sprockets, Shafts, Chains, Guide Bearings

- Solvent clean to remove dirt and old lubricant
- Relubricate
- Hand turn to verify poper alignment and freedom of operation. Shim or change alignment if required.
- Check mounting bolts to be adequately tightened

6.4 POWER DISTRIBUTION PANELS AND ASSOCIATED ELECTRICAL DEVICES

General Condition - Unsafe for commercial duty. A combination of corrosion, ambient organic contamination, damaged conductor insulation, mixture of copper and aluminum wire splices, and

removal of components for alternate purpcses have rendered this equipment unsuitable for further use. Complete replacement is required, including wiring, cabling, conduits, and associated hardware.

6.5 FAN (1) - SUCTION FOR ROTARY CONVEYING DRIER

Manufacturer - American Blower Corporation, Mi. U.S.A.

General Condition - Good. Vee belts need replacement. A 5 hp drive motor and pinion gear have been removed from the base plate and require replacement.

General Comment - Americal Blower Corporation does not currently manufacture fans. However, due to fan sizing and material selection, the fans should give adequate service.

SECTION 7

CONCLUSION

With implementation of the recommended process and equipment improvements, the American Rice Mill will be capable of achieving in excess of 60 metric tons per day capability to satisfy the adjacent milling plant capacity. The cost of the recommended refurbishment and improvements will be a small fraction of the replacement cost of a new facility of equal capacity and product quality. This results from the good condition of the majority of the major capital equipment (Boiler, Husk Furnace, Drier Fans (3), Drier (3), Steeping Tanks (5), Receiving Bin (1), Tempering Bins (8), Rotary Drying Conveyor, and Autoclave (except inlet and outlet valves and safety valve). The civil facilities (poured concrete floor, reinforced concrete load bearing walls with imbeded H section structual steel, hard wood platforms, steel railings and platform supports, wooden roof trusses, fiber and sheet steel roof) are all in very good to excelllent condition and appear very conservatively designed and well constructed. This also contributes to the desirability of refurbishment of the parboiling plant.

A 8010.1D

STONE & WEBSTER ENGINEERING CORPORATION

CALCULATION SHEET

Page No. _____
Preliminary _____
Item _____

Client U.S. AID - AMERICAN RICE MILL Location RANGOON, BURMA Est. No. 1 J.O. No. 14003.08

Subject AUTOCLAVE - STEAM FEED DISTRIBUTION PIPING Date 4/25/83 By DEJ

Checked By

Based on FIELD MEASUREMENTS AT SITE Revised By

FIGURE 1

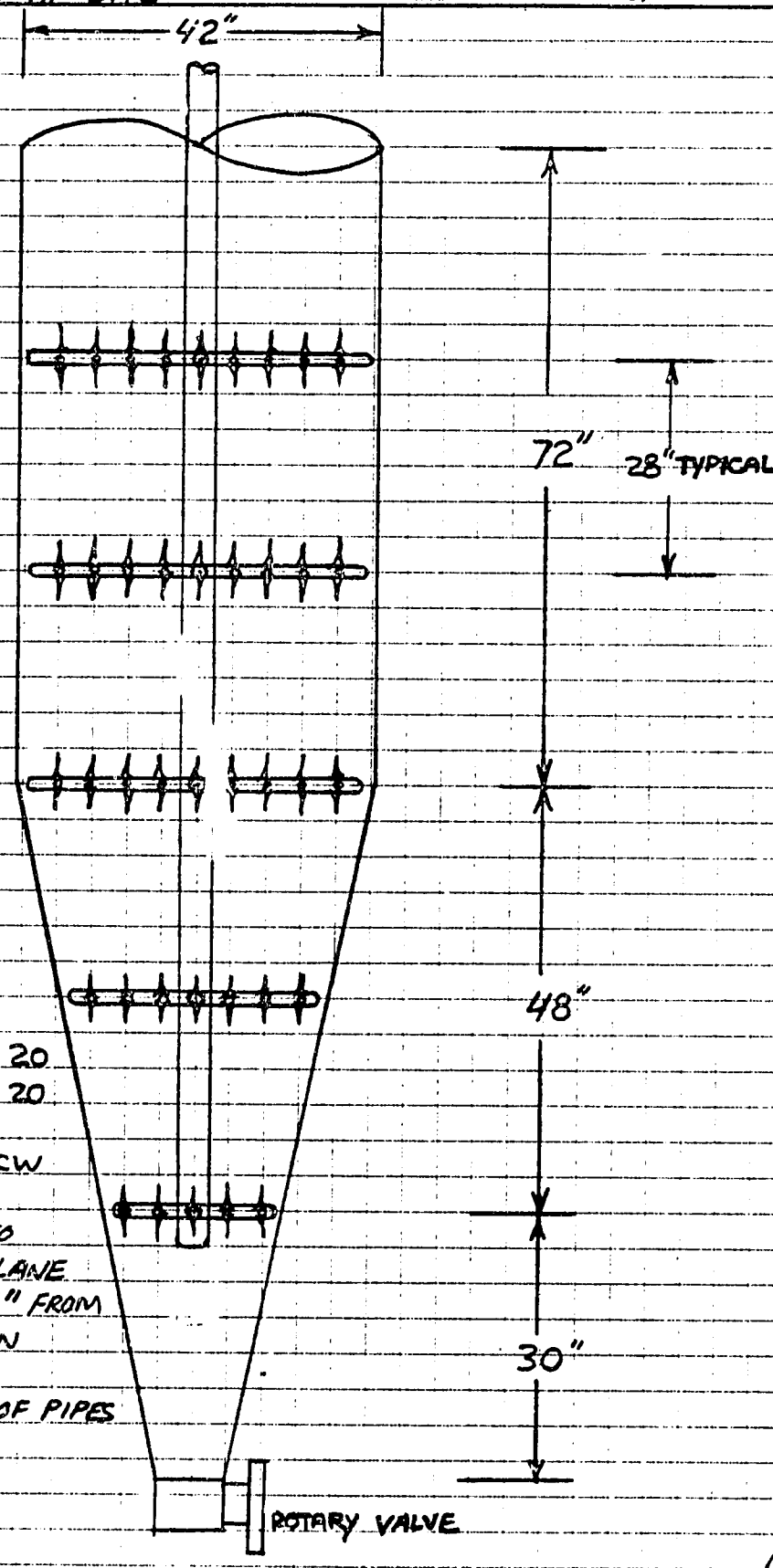

NOTES:

- CENTER DISTR. PIPE - 2½" Sch 20
- HORZ. DISTR. PIPE - 1" Sch 20
- ROTATE EACH LEVEL OF HORZ. DISTR. PIPES 30° CW FROM LEVEL ABOVE
- HORZ. PIPES (4) AT 90° TO EACH OTHER IN SAME PLANE
- DRILL ¼"Ø HOLES EVERY 4" FROM ℄ AND LOCATE 90° APART ON CIRCUMFERENCE OF PIPES
- MAINTAIN ½" GAP AT END OF PIPES FOR EXPANSION

▲ 5010.1D

STONE & WEBSTER ENGINEERING CORPORATION

CALCULATION SHEET

Page No. _____
Preliminary _____
Item _____

Client U.S. AID - AMERICAN RICE MILL Location RANGOON, BURMA Est. No. 1 J.O. No. 14003.08
Subject BOILER STEAM OUTLETS - SUPERHEATED AND SATURATED Date 4/26/83 By DEL
Checked By
Based on CONCEPTUAL ENGR. + FIELD SKETCH Revised By

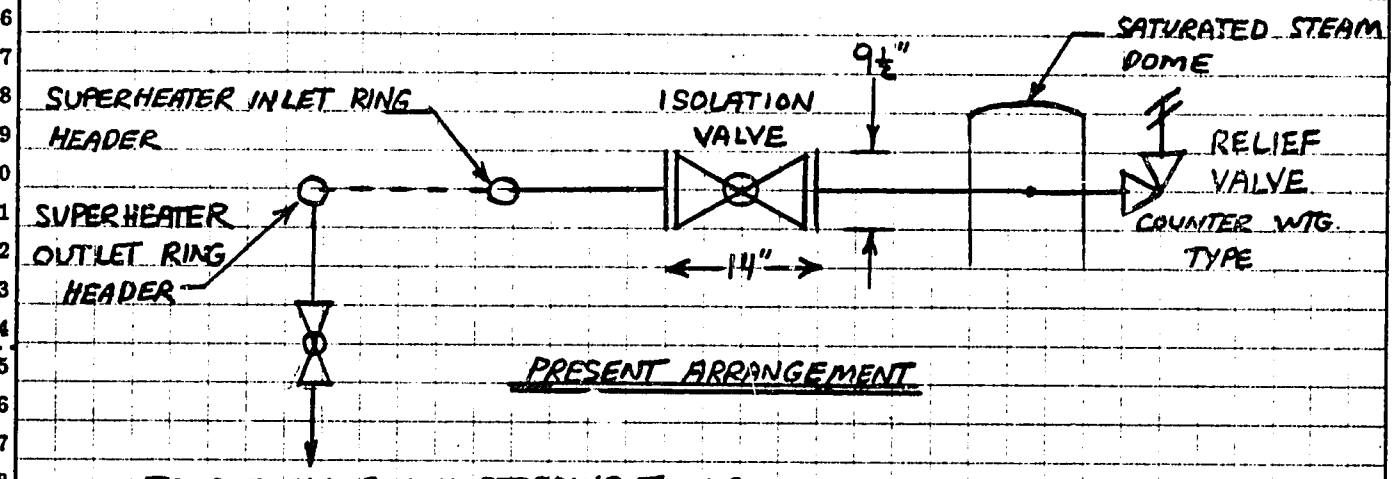

FIGURE 2

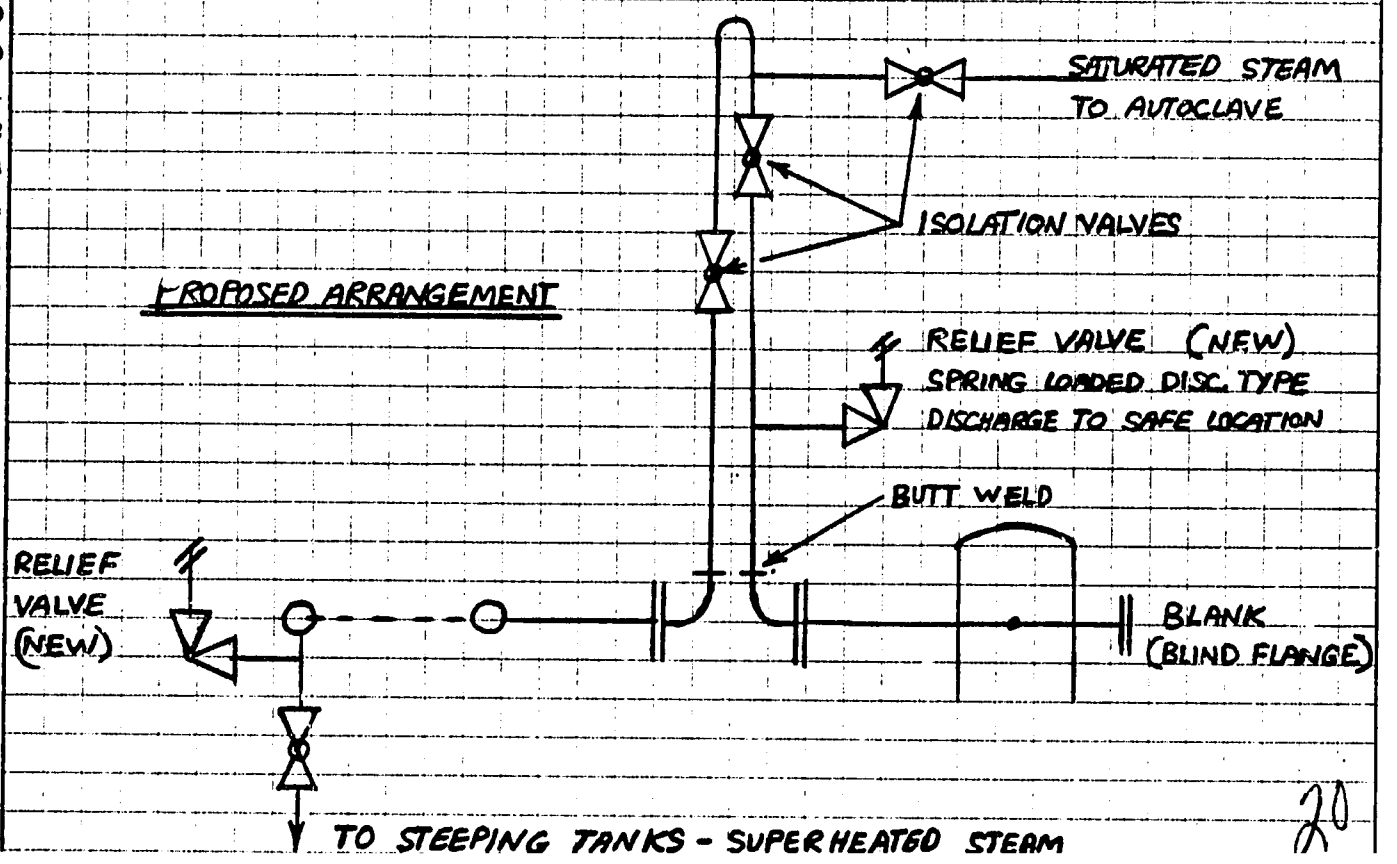

▲ 5010.1D

STONE & WEBSTER ENGINEERING CORPORATION

CALCULATION SHEET

Page No. _____
Preliminary _____
Item _____

Client U.S. AID - AMERICAN RICE MILL Location RANGOON, BURMA Est. No. 1 J.O. No. 14003.08

Subject PROPOSED ARRANGEMENT - FIRE TENDING PORTS Date 4/28/83 By D.E.S.

Checked By

Based on CONCEPTUAL ARRANGEMENT Revised By

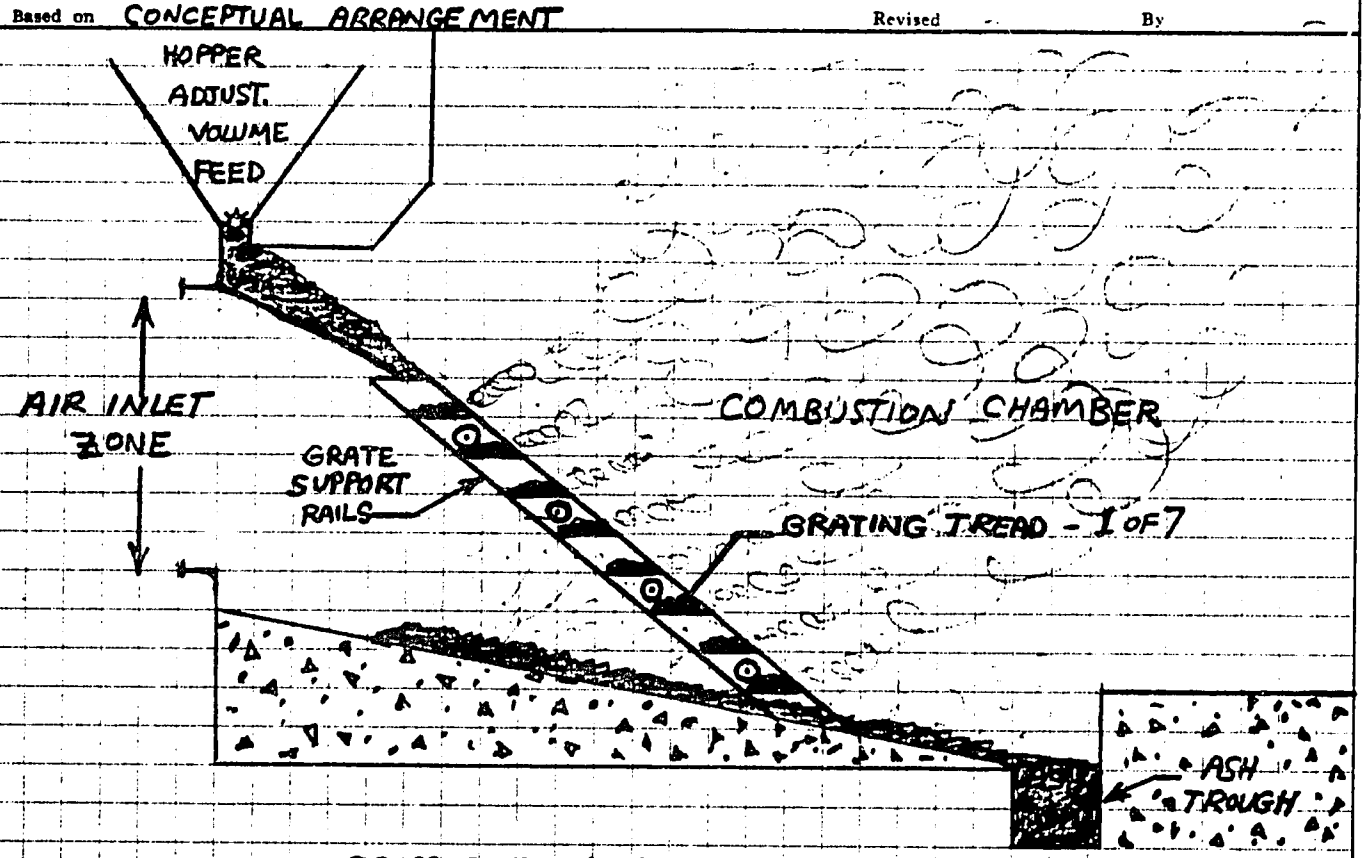

CROSS SECTION HUSK FURNACE
RIGHT SIDE
VIEW

⊙ DENOTES LOCATION OF PROPOSED FIRE TENDING PORTS

NOTES:

- PORTS FORMED BY CHIPPING OUT SIDE WALL REFRACTORY AND SLEEVING WITH 6"Ø Sch 80 PIPE
- PORTS SHOWN ON RIGHT SIDE WALL. LEFT SIDE WALL PORTS TO BE LOCATED AT ALTERNATE GRATING TREAD ELEVATIONS.
- PORT SLEEVE NIPPLES TO BE PIPE CAPPED WHEN NOT IN USE
- PORTS MAY BE USED TO PROVIDE OVERFIRE AIR

FIGURE 3.

BULLETIN SM-1

CEA·Carter-Day Screen Machine

Refined Sediment Analysis and Control

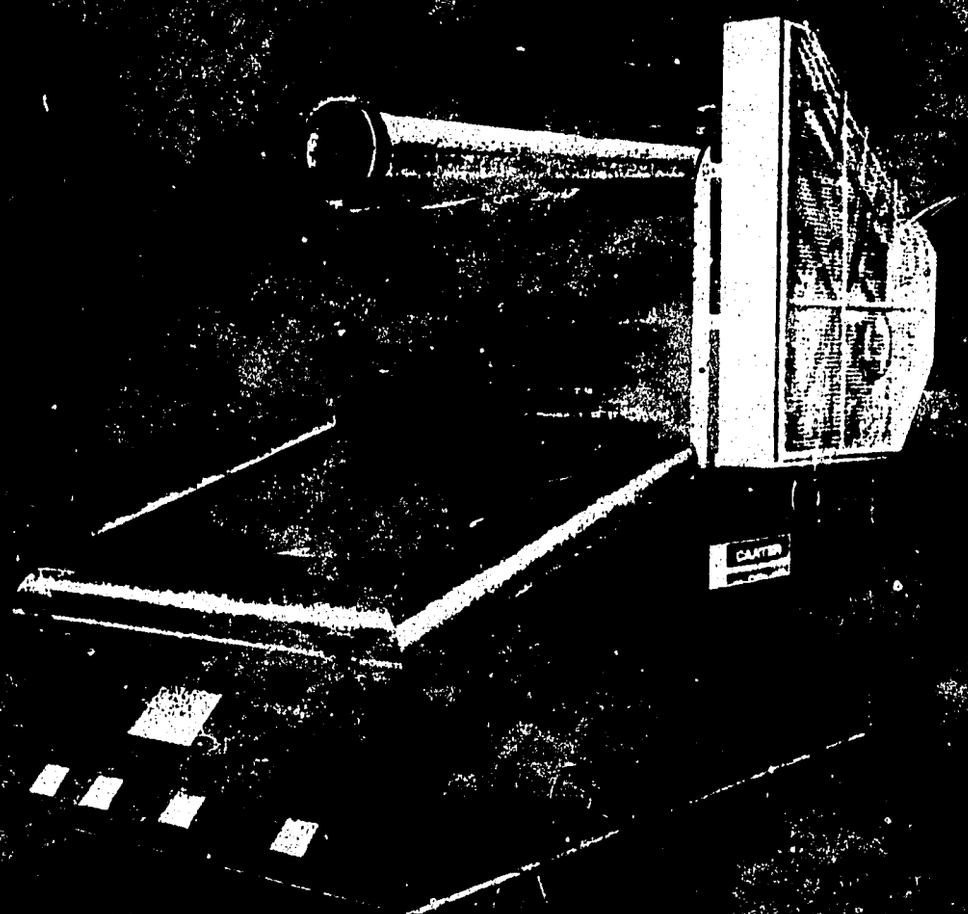

CEA·Carter-Day

The Screen Machine's cleaning system has four distinctive separation stages:

1. **Rough Scalping** – Foreign material such as sticks, stringers, stones, etc., are removed by the wire mesh scalping reel.
2. **Aspiration** – Lightweight impurities are removed by an efficient air flow along the entire width of the unit.
3. **Rough Screening** – Oversize material is removed by going over the top screen.
4. **Fine Screening** – Undersize impurities are removed by passing through the lower screens.

The features you have looked for are all included in the CEA•Carter-Day Screen Machine. They are as follows:

1. All metal construction – totally enclosed – no pollution problems.
2. No vibration – screen decks isolated within the unit.
3. Screens self clean with live rubber balls – effective to –50°F.
4. Gyratory motion – head end.
5. Oscillating motion – tail end.
6. Quick change screen decks – with patented framed steel and wire inserts for easy replacement and tension.
7. Automatic grease lubrication system – standard.
8. Variable speed motor drive – no gears.
9. Low horsepower.
10. Easy access adjustments.
11. Large inspection windows.
12. Available in two models (930 and 950) – also with and without scalperator.
13. Scalperator equipped models available with fan or without fan with transition for remote fan.
14. Low profile – low maintenance – clean lines.

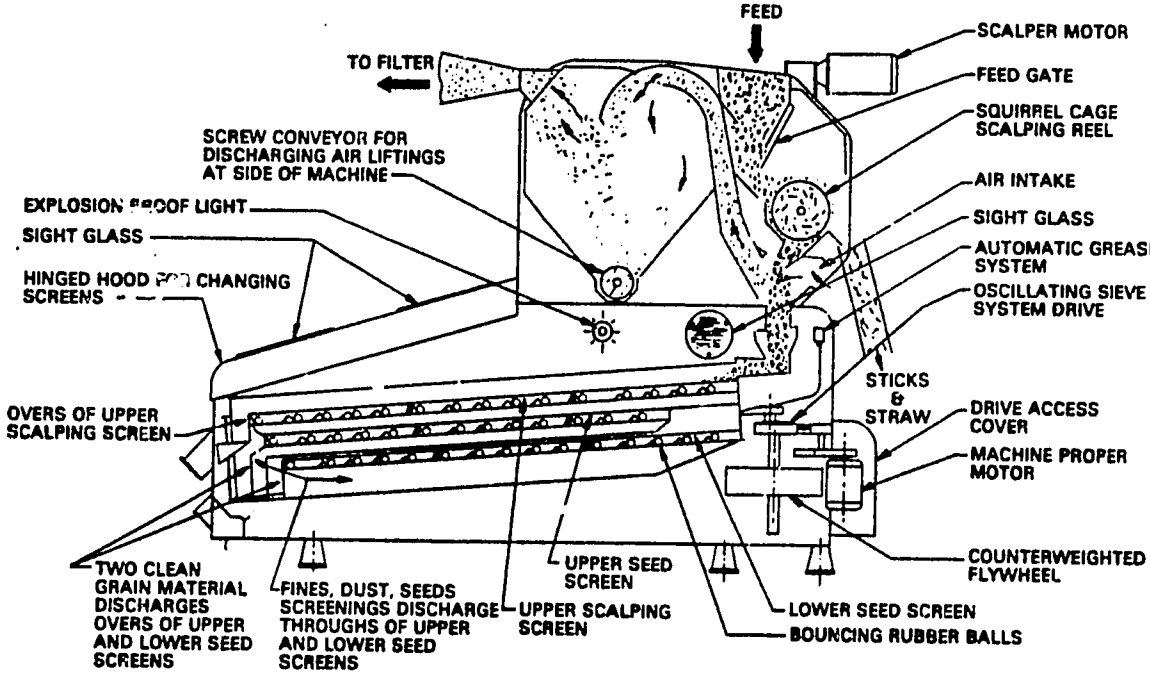

FANLESS MODEL ILLUSTRATED REMOTE FAN REQUIRED FOR FANLESS MODELS

CARTER SCREEN MACHINE	MOTOR HP Req'd.			Capacity on wheat BPH*	Height Overall	Width	Length	CFM exhausted	Approx. Shipping Weight
	Machine Proper	Scalper	Fan						
Model 930 with 11 x 36 scalper / integral fan	1	¾	3	500	105"	60"	140"	2700	3100 lbs.
Model 930 with 11 x 36 scalper / remote fan	1	¾	–	500	96"	60"	140"	–	2900 lbs.
25H Fan for above	–	–	3-7½	--	–	–	–	–	200 lbs.
Model 950 with 11 x 60 scalper / integral fan	1½	1	5	1000	105"	84"	140"	4500	4100 lbs.
Model 950 with 11 x 60 scalper / remote fan	1½	1	–	1000	96"	84"	140"	–	3900 lbs.
35H Fan for above	–	–	5-10		–	–	–	–	200 lbs.
Model 930 without scalperator	1	–	–	500	68"	42"	130"	–	2100 lbs.
Model 950 without scalperator	1½	–	–	1000	68"	62"	130"	–	2300 lbs.

*Capacities based on cleaning product in conjunction with other cleaners making the length and thickness separations.
Dimensions and specifications subject to change without notice or obligation.

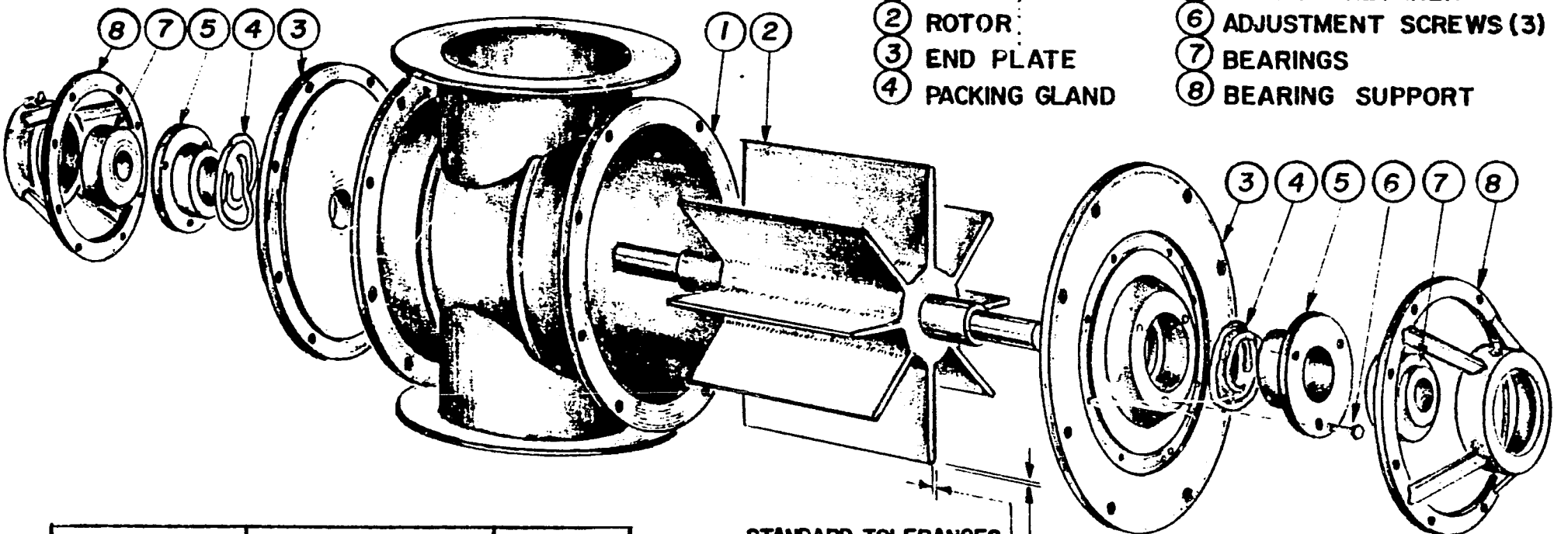

1. BODY
2. ROTOR
3. END PLATE
4. PACKING GLAND
5. PACKING RETAINER
6. ADJUSTMENT SCREWS (3)
7. BEARINGS
8. BEARING SUPPORT

STANDARD TOLERANCES

.004 END CLEARANCE
±.001 (BOTH ENDS)

.004 ROTOR CLEARANCE
±.001 (ON RADIUS)

NOTE:

END PLATES, PACKING GLAND RETAINER, BEARINGS, AND BEARING SUPPORT, SAME FOR SERIES VCO, VDO, VEO, AND VJO.

PACKING GLAND – 3/8" SQ. PACKING MATERIAL

	SIZE		BEARINGS	SHAFT SIZE
	VBO 8 x 6	LINK BELT	WB 223–U	1 7/16
	VBO 10 x 6	LINK BELT	WB 223–U	1 7/16
	VBO 10 x 8	LINK BELT	WB 223–U	1 7/16
	VBO 12 x 8	LINK BELT	WB 223–U	1 7/16
2	VBO 14 x 10	REXNORD	ZMC-9115	1 15/16
→ 2	VBO 16 x 12	REXNORD	ZMC-9115	1 15/16
1	VBO 18 x 12	REXNORD	ZMC-9203	2 3/16
1	VBO 18 x 14	REXNORD	ZMC-9203	2 3/16
	VBO 20 x 15	REXNORD	ZMC-9203	2 3/16
	VBO 24 x 15	REXNORD	ZMC-9203	2 3/16

OUTBOARD BEARING AIRLOCK VALVE DETAILS

KICE METAL PRODUCTS CO. 2840 S. HEAD AVE. WICHITA, KANSAS

DRAWN BY E.W.S. CHECKED BY DATE 4-6-75

REVISED 1 1/2/80 - WAS 1 15/16 2 11/21/79 WAS WB231

JOB NUMBER

DRAWING NUMBER 2-1202

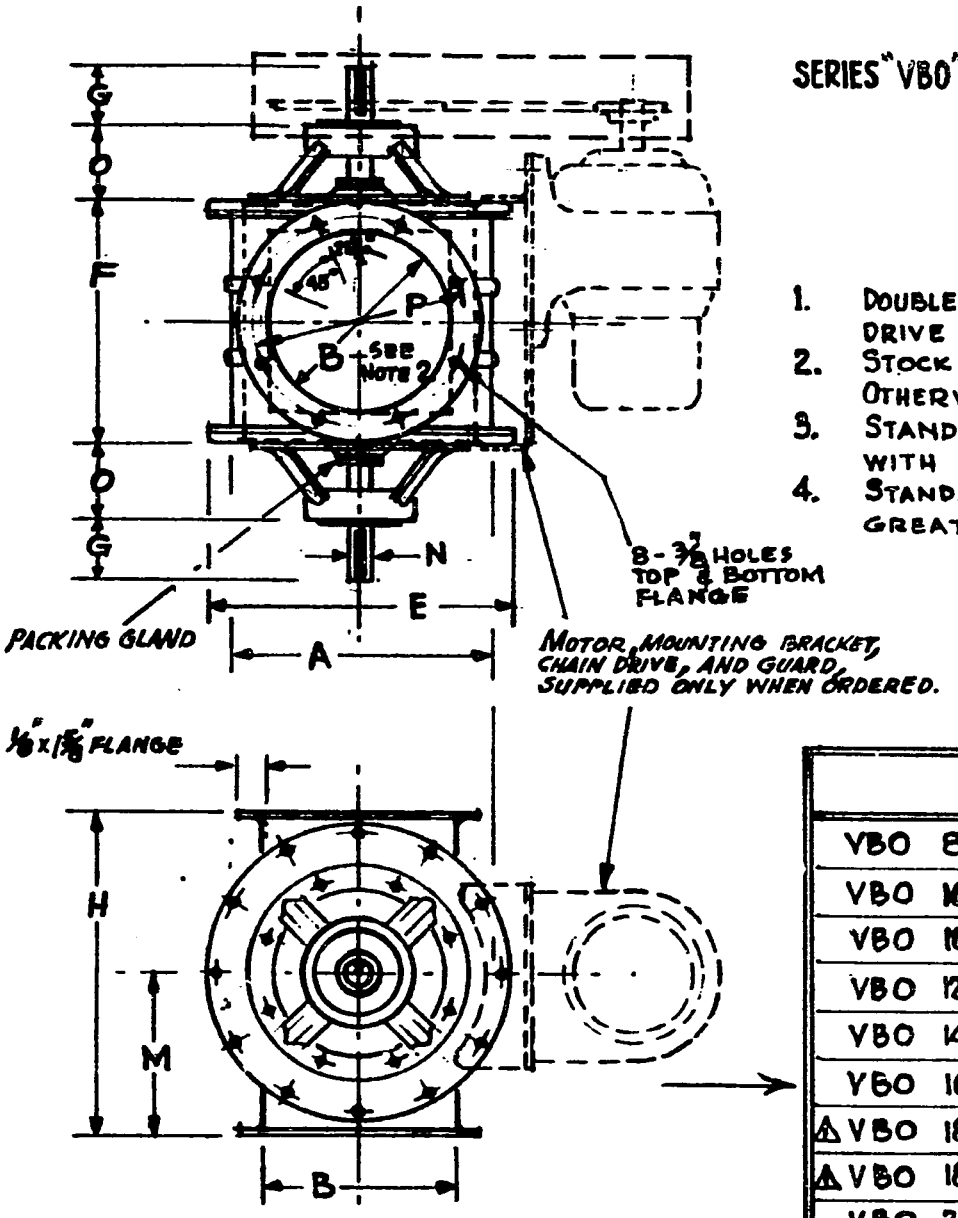

SERIES "VBO" - As shown with close tolerance machined vane tips and ends. With outboard bearings.

NOTES:

1. Double end shaft permits drive at either end, standard drive arrangement as shown.
2. Stock inlet and/or outlet may be square if specified, otherwise it will be round. - See VDO for Sq. flange detail.
3. Standard construction include fabricated steel body with cast end plates and fabricated steel rotor.
4. Standard clearance is .004" with .001" tolerance. If greater clearance is desired please specify.

	A	B	E	F	G ▽3	H	M	N	O ▽2	P	CU. FT. / REV
VBO 8 x 6	8 5/8	6	11	9	3 3/16	13 1/2	6 3/4	1 7/16	3 1/16	8	.16
VBO 10 x 6	10 3/4	6	13	9	3 3/16	13 1/2	6 3/4	1 7/16	3 1/16	8	.27
VBO 10 x 8	10 3/4	8	13	11	3 3/16	13 1/2	6 3/4	1 7/16	3 1/16	10	.33
VBO 12 x 8	12 3/4	8	15 1/4	11	3 3/16	16 3/4	8 3/8	1 7/16	3 1/16	10	.55
VBO 14 x 10	14	10	17	13 1/8	2 7/8	18 1/2	9 1/4	1 15/16	5 1/8	12	.67
VBO 16 x 12	16	12	19	15 1/4	2 7/8	20 1/2	10 1/4	1 15/16	5 1/8	14	1.10
⚠ VBO 18 x 12	18	12	21	15 1/4	2 7/8	22 1/2	11 1/4	2 3/16	5 1/8	14	1.45
⚠ VBO 18 x 14	18	14	21	17 1/4	2 7/8	22 1/2	11 1/4	2 3/16	5 1/8	15 3/4	1.67
VBO 20 x 15	20	15	23	18 1/2	3 1/8	24 1/2	12 1/4	2 3/16	5 1/8	16 3/4	2.30
VBO 24 x 15	24	15	27	18 1/2	3 1/8	28 1/2	14 1/4	2 3/16	5 1/8	16 3/4	3.30

REVISED 8/8/77 | ⚠ "N" WAS 1 5/16 - 1/2/80 | ▽ 12-13-80

KICE AIRLOCK VALVES - SERIES "VBO"
WITH OUTBOARD BEARINGS

KICE METAL PRODUCTS CO. 2040 S MEAD AVE WICHITA, KANSAS

DRAWN BY E.W.S. CHECKED BY [illegible] DATE 12-19-66

DRAWING NUMBER 2-0268

SIZE 125 — SINGLE WIDTH — SINGLE INLET

Wheel Diameter 62½ ins. Wheel Circumference 16.36 ft. Outlet Area 19.26 sq. ft. Inlet Area 22.70 sq. ft.

Maximum H.P. = 145.0 $\left(\frac{R.P.M.}{1000}\right)^3$

Volume	Outlet Velocity	Velocity Pressure	⅛" S.P.			¼" S.P.			⅜" S.P.			½" S.P.			⅝" S.P.			¾" S.P.		
			Tip Sp'd	R.P.M.	H.P.	Tip Sp'd	R.P.M.	H.P.	Tip Sp'd	R.P.M.	H.P.	Tip Sp'd	R.P.M.	H.P.	Tip Sp'd	R.P.M.	H.P.	Tip Sp'd	R.P.M.	H.P.
9430	[illegible]	.036	2017	123	.27															
10563	[illegible]	.040	2115	129	.31	2503	150	.58												
11556	[illegible]	.123	2215	135	.35	2670	163	.64	3043	189	.93									
12519	[illegible]	.026	2325	142	.40	2750	168	.67	3148	192	1.02									
13482	700	.031	2440	149	.44	2840	174	.75	3215	197	1.10	3585	219	1.48						
14445	750	.035	2515	156	.50	2940	180	.83	3300	202	1.18	3685	222	1.58						
15408	800	.040	2600	163	.58	3040	186	.91	3380	207	1.25	3705	226	1.68	4015	245	2.12			
16371	850	.045	2780	170	.64	3138	192	1.00	3473	212	1.37	3780	231	1.77	4070	249	2.24			
17334	900	.051	2900	177	.71	3245	199	1.08	3558	217	1.46	3860	236	1.89	4146	253	2.37	4450	271	2.85
18297	950	.056	3013	184	.81	3355	205	1.19	3670	224	1.58	3955	242	2.00	4223	258	2.50	4495	275	2.99
19260	1000	.063	3138	192	.89	3465	212	1.29	3765	230	1.72	4033	246	2.14	4310	263	2.62	4560	279	3.14
21186	1100	.076	3388	207	1.08	3690	226	1.56	3968	242	1.96	4230	258	2.45	4480	274	2.93	4735	289	3.46
23112	1200	.090	3640	222	1.33	3930	240	1.81	4195	256	2.29	4430	270	2.79	4665	285	3.31	4895	299	3.95
25038	1300	.106	3900	238	1.62	4175	255	2.12	4420	270	2.64	4645	284	3.18	4885	298	3.72	5100	312	4.25
26964	1400	.123	4165	255	2.00	4415	270	2.47	4635	283	3.03	4860	298	3.60	5060	310	4.15	5290	323	4.76
28890	1500	.141	4435	271	2.43	4660	285	2.85	4885	298	3.47	5090	312	4.06	5295	324	4.66	5500	336	5.32
30816	1600	.160	4710	288	2.93	4910	300	3.29	5120	313	3.95	5320	326	4.56	5525	338	5.22	5710	349	5.85
32742	1700	.181				5160	315	3.77	5370	328	4.45	5560	340	5.16	5740	351	5.82	5940	363	6.55
34668	1800	.203							5610	343	5.01	5800	354	5.78	5965	364	6.45	6160	377	7.26
36594	1900	.226							5865	358	5.62	6025	368	6.44	6225	380	7.16	6390	390	8.03
38520	2000	.250										6275	384	7.09	6455	395	7.92	6625	405	8.73
42372	2200	.303										6775	414	8.66	6920	423	9.64	7090	434	10.5
46224	2400	.360													7440	455	11.6	7590	464	12.7
50076	2600	.423																8062	493	14.8

Volume	Outlet Velocity	Velocity Pressure	⅞" S.P.			1" S.P.			1¼" S.P.			1½" S.P.			1¾" S.P.			2" S.P.		
			Tip Sp'd	R.P.M.	H.P.	Tip Sp'd	R.P.M.	H.P.	Tip Sp'd	R.P.M.	H.P.	Tip Sp'd	R.P.M.	H.P.	Tip Sp'd	R.P.M.	H.P.	Tip Sp'd	R.P.M.	H.P.
19260	1000	.063	4820	295	3.68															
21186	1100	.076	4955	303	4.03	5185	318	4.62												
23112	1200	.090	5130	314	4.41	5340	326	5.01	5760	352	6.36	6185	378	7.70						
25038	1300	.106	5300	324	4.84	5500	336	5.45	5905	361	6.74	6295	384	8.25	6670	408	9.65			
26964	1400	.123	5485	335	5.36	5680	348	5.97	6070	371	7.32	6430	394	8.56	6790	415	10.2	7170	438	11.7
28890	1500	.141	5675	346	5.93	5880	360	6.57	6245	382	7.90	6600	404	9.44	6950	423	11.0	7270	444	12.7
30816	1600	.160	5850	360	6.55	6050	372	7.22	6415	392	8.67	6760	414	10.0	7075	432	11.8	7410	452	13.5
32742	1700	.181	6115	374	7.24	6285	384	7.91	6620	405	9.44	6950	424	10.8	7250	443	12.5	7560	462	14.3
34668	1800	.203	6338	388	7.91	6490	398	8.61	6820	417	10.2	7115	434	11.8	7430	454	13.3	7720	472	15.0
36594	1900	.226	6563	401	8.69	6710	410	9.48	7010	429	11.2	7340	448	12.7	7650	465	14.3	7910	484	16.0
38520	2000	.250	6780	414	9.56	6920	424	10.3	7235	443	12.1	7530	460	13.7	7800	477	15.4	8065	492	17.2
42372	2200	.303	7250	443	11.4	7380	452	12.4	7660	468	14.1	7935	484	16.0	8200	501	17.7	8460	516	19.5
46224	2400	.360	7738	473	13.6	7860	480	14.5	8105	490	16.4	8390	512	18.3	8630	526	20.4	8860	540	22.4
50076	2600	.423	8220	502	15.9	8350	510	17.0	8565	525	19.1	8820	540	21.0	9060	555	23.3	9290	568	25.4
53928	2800	.490	8710	526	18.6	8830	540	19.7	9055	550	22.5	9270	565	24.3	9480	580	26.4	9700	596	28.7
57780	3000	.563	9200	562	21.6	9320	570	22.7	9545	581	25.6	9770	596	27.7	9990	610	30.0	10180	624	32.6
61632	3200	.640				9820	600	26.3	10035	613	29.3	10240	626	31.6	10450	639	34.1	10640	652	36.4
65484	3400	.723				10320	630	30.2	10530	643	33.5	10730	656	35.6	10920	668	38.5	11120	680	41.2
69336	3600	.810							11025	673	38.1	11220	686	40.1	11400	697	43.1	11580	708	46.3
73188	3800	.903										11720	716	44.0	11890	726	47.6	12050	736	51.4
77040	4000	1.000													12410	758	53.6	12550	766	56.8
80892	4200	1.103													12850	787	59.7	13070	800	63.2

Volume	Outlet Velocity	Velocity Pressure	2¼" S.P.			2½" S.P.			2" S.P.			3½" S.P.			4" S.P.			5" S.P.		
			Tip Sp'd	R.P.M.	H.P.	Tip Sp'd	R.P.M.	H.P.	Tip Sp'd	R.P.M.	H.P.	Tip Sp'd	R.P.M.	H.P.	Tip Sp'd	R.P.M.	H.P.	Tip Sp'd	R.P.M.	H.P.
[illegible]	[illegible]	.141	7200	464	14.3															
[illegible]	[illegible]	.160	7715	472	15.0	8030	490	17.0												
[illegible]	[illegible]	.181	7860	480	16.0	8140	498	17.9												
[illegible]	[illegible]	.203	8010	489	17.0	8255	506	18.9	8560	542	22.7									
[illegible]	[illegible]	.226	8175	500	17.9	8445	516	19.9	8910	550	23.9									
[illegible]	[illegible]	.250	8340	510	18.9	8620	526	21.0	9120	555	25.1	9410	590	31.5						
[illegible]	[illegible]	.303	8720	533	21.6	8980	548	23.5	9470	578	27.7	9810	633	32.9	10370	635	37.0			
[illegible]	[illegible]	.360	9105	556	24.3	9330	570	26.4	9750	595	30.6	10255	625	35.2	10830	652	43.1	11520	704	50.5
[illegible]	[illegible]	.423	9520	582	27.5	9770	596	29.7	10200	634	34.3	10550	645	36.7	11270	672	[illegible]	11770	722	54.4
[illegible]	[illegible]	.490	9940	607	31.0	10160	620	33.5	10580	646	38.1	10970	670	43.0	11570	685	47.8	11970	732	53.8
[illegible]	[illegible]	.563	10410	636	35.1	10580	645	37.4	11000	672	42.6	11350	692	47.4	11760	720	52.6	12160	744	58.4
[illegible]	[illegible]	.640	10850	663	39.1	11030	676	41.8	11420	698	47.2	11730	720	52.4	12165	744	57.8	12550	764	63.8
[illegible]	[illegible]	.723	11310	692	43.7	11480	702	46.4	11880	726	52.2	12220	748	58.0	12570	768	63.6			
[illegible]	[illegible]	.810	11770	720	48.7	11930	728	51.6	12320	754	57.6	12675	776	63.4	12950	786	68.0			
[illegible]	[illegible]	.903	12250	750	51.5	12450	760	57.4	12760	780	64.4									
[illegible]	[illegible]	1.000	12730	778	60.1	12910	790	63.4												

See page 6 for explanation of above tables.

Best Available Document

Best Available Document

26

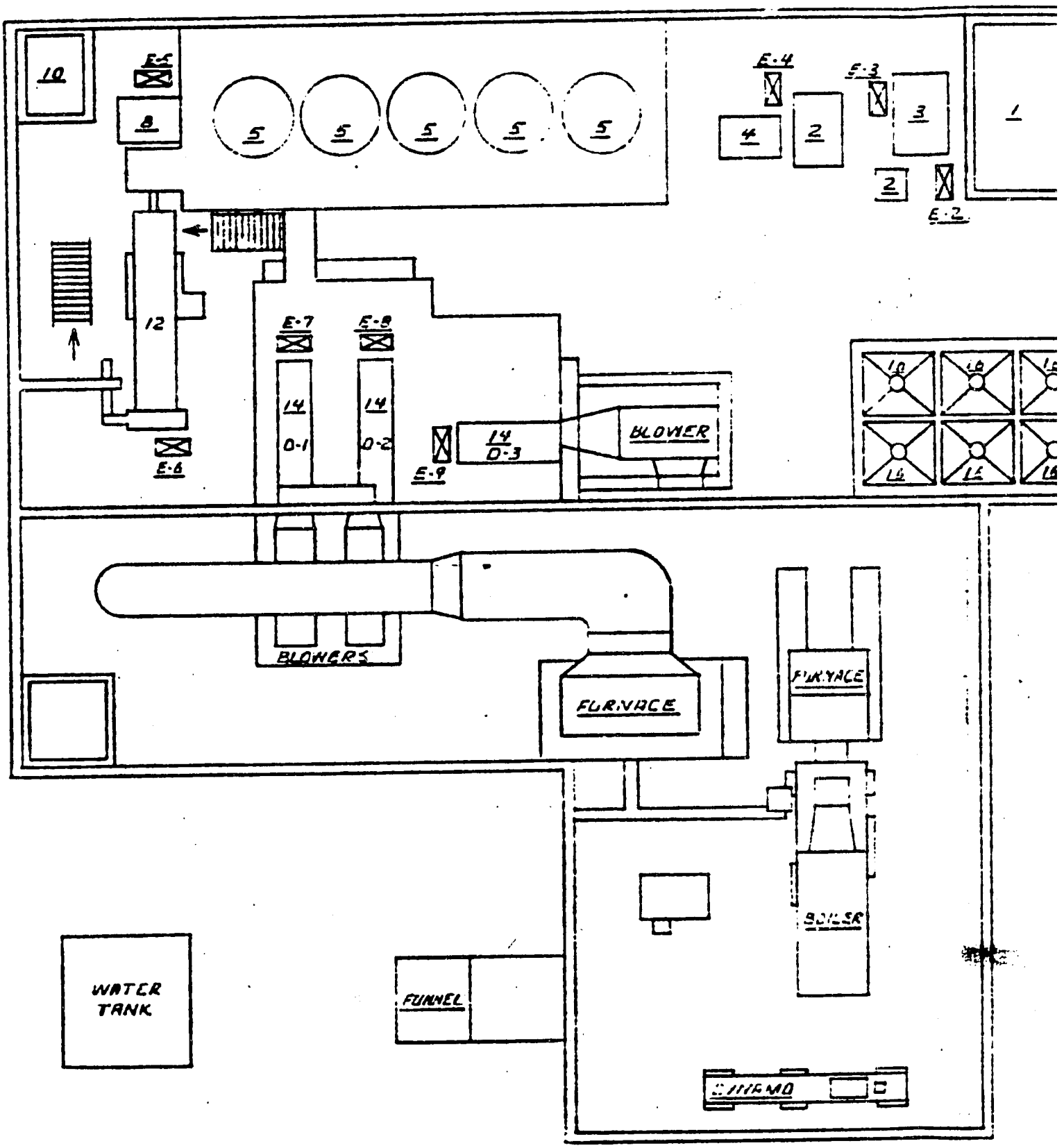
10
E-5
8
5
5
5
5
5
E-4
E-3
4
2
3
1
2
E-2
12
E-7
E-8
14
D-1
14
D-2
14
D-3
BLOWER
E-6
E-9
BLOWERS
FURNACE
FURNACE
BOILER
WATER TANK
FUNNEL
DINAMO

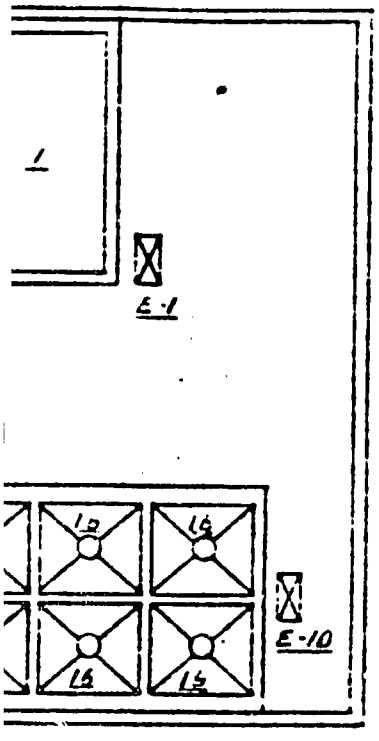

LEGEND

1 - RECEIVING BIN
2 - WARKING BIN
3 - SEIVE ASPIRATOR CLEANER
4 - AUTO-SCALE
5 - STEEPING TANKS
6 - NOT SHOWN
7 - NOT SHOWN
8 - AUTOCLAVE
9 - NOT SHOWN
10 - WATER PUMP
11 - NOT SHOWN
12 - ROTARY DRIER
13 - NOT SHOWN
14 - COLUMN DRIER
15 - NOT SHOWN
16 - TEMPERING BINS
17 - NOT SHOWN

ELEVATORS

E-1 RECEIVING ELEVATOR
E-2 CLEANER ELEVATOR
E-3 AUTO-SCALE ELEVATOR
E-4 STEEPING TANKS ELEVATOR
E-5 AUTOCLAVE ELEVATOR
E-6 ELEVATOR TO DRIER NO. 1
E-7 ELEVATOR TO DRIER NO. 2
E-8 ELEVATOR TO DRIER NO. 3 OR TEMERING BINS
E-9 ELEVATOR TO TEMPERING BINS
E-10 ELEVATOR TO MILL OR CONVEYOR TO DRIER NO. 3

DRIERS

D-1, 2, 3.

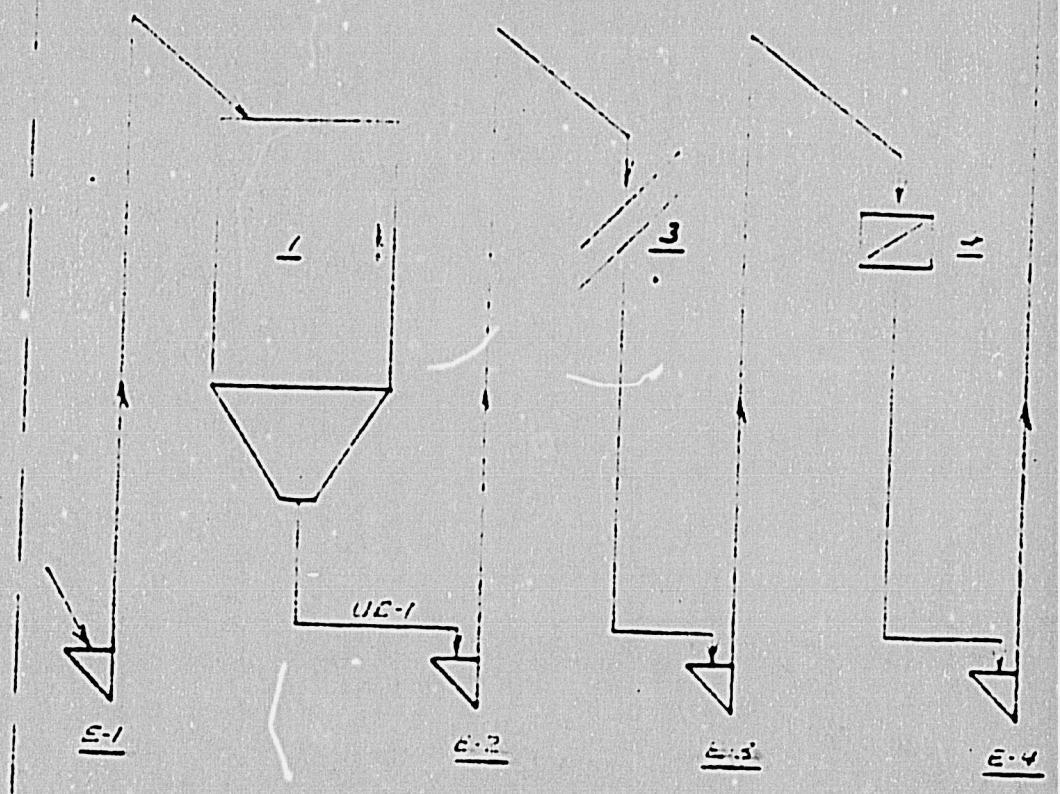

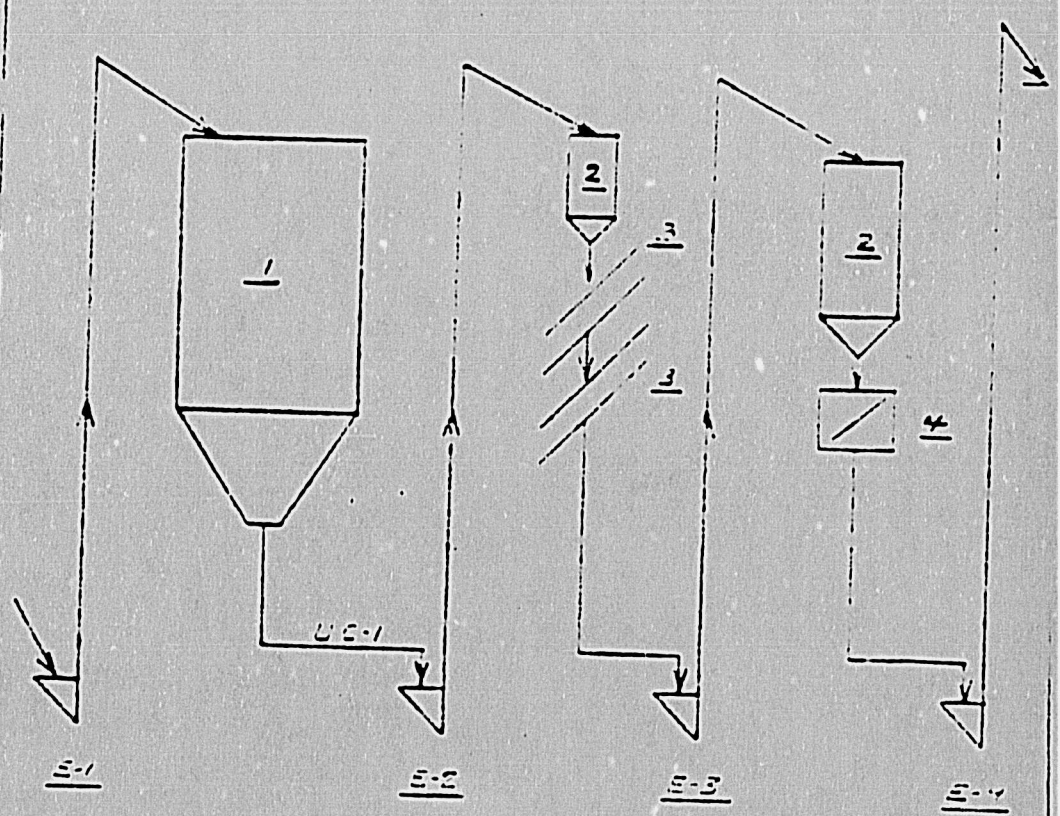

RECEIVING - CLEANING - WEIGHING

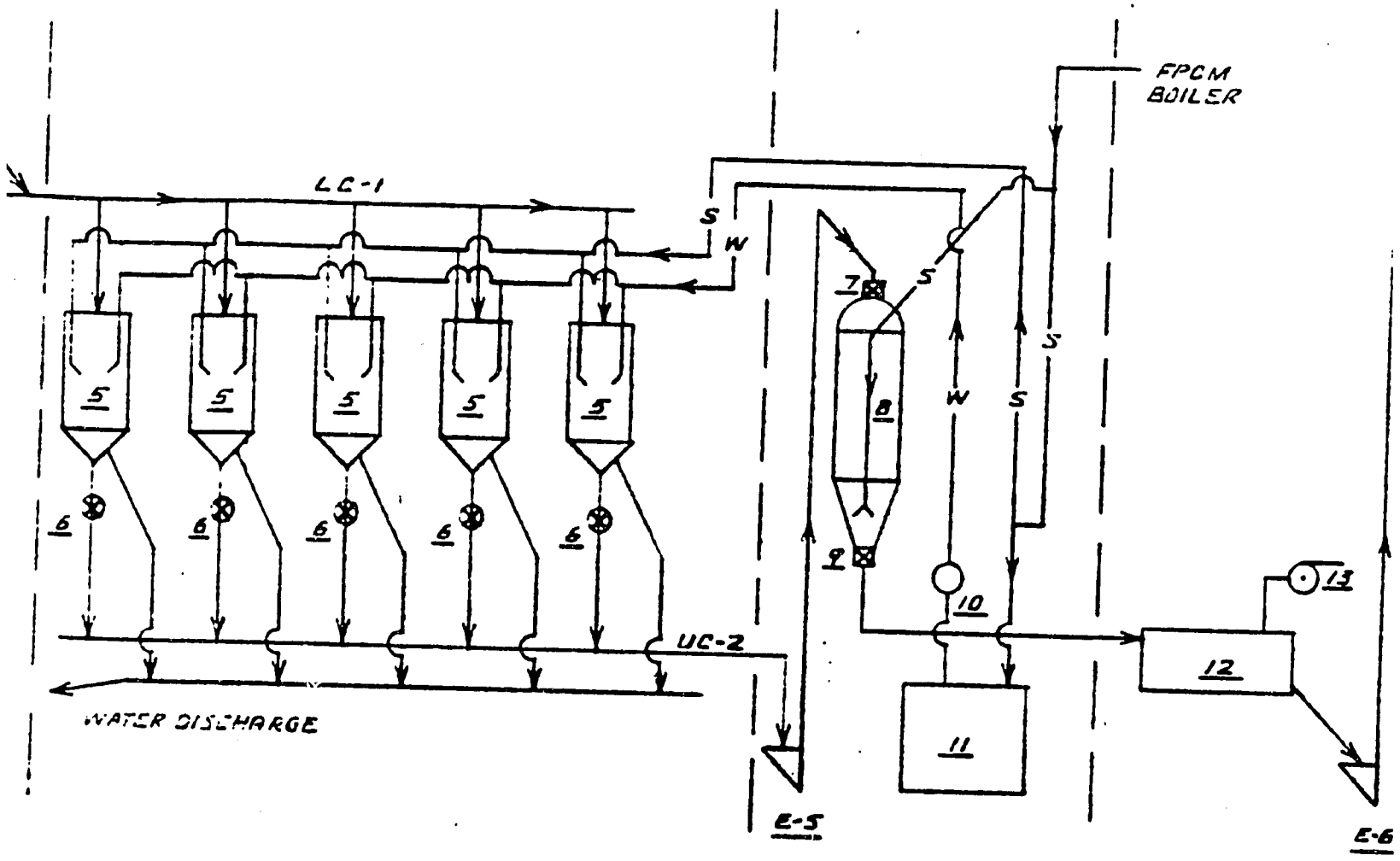

EXISTIN

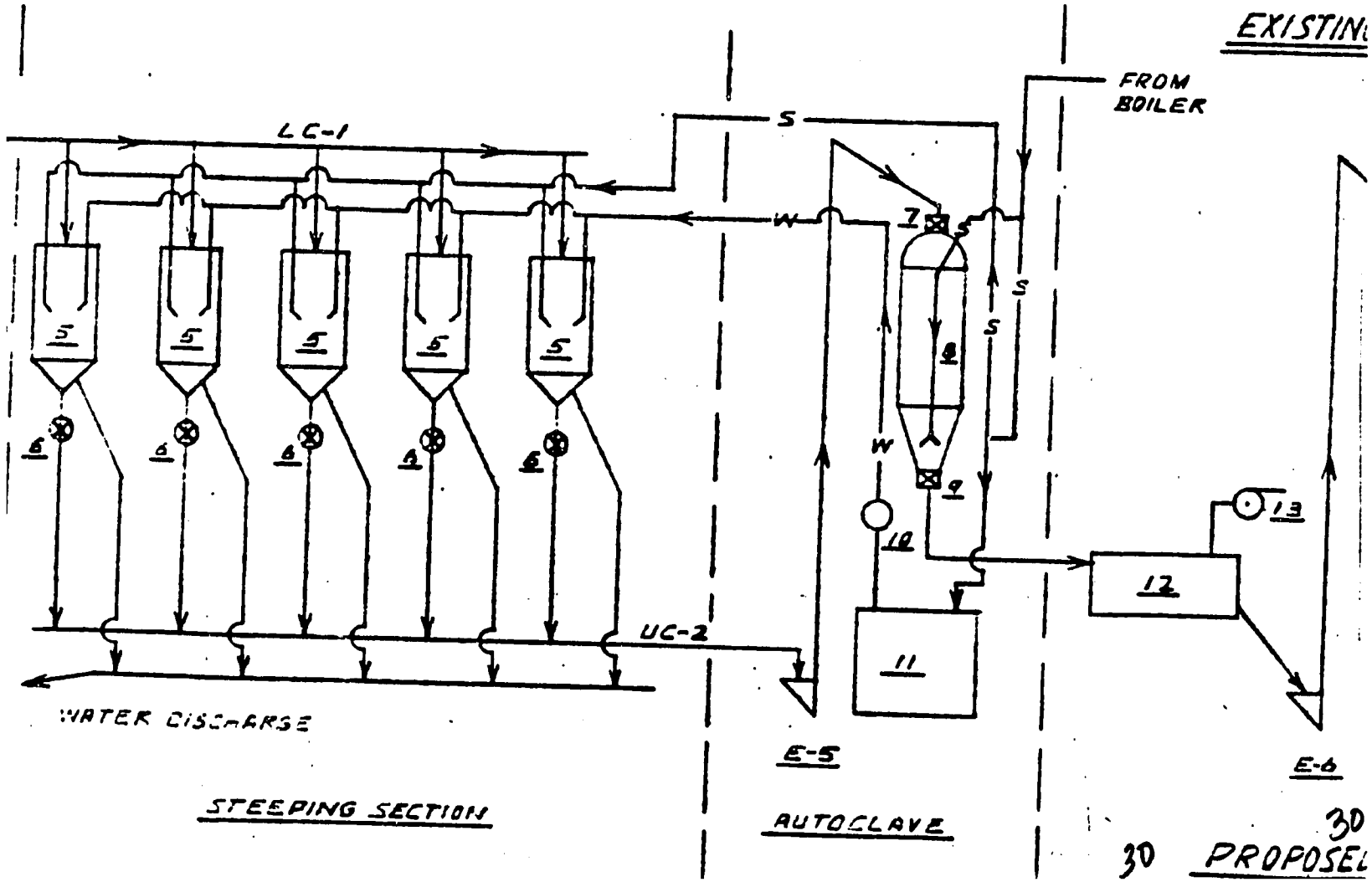

STEEPING SECTION

AUTOCLAVE

30

30 PROPOSE

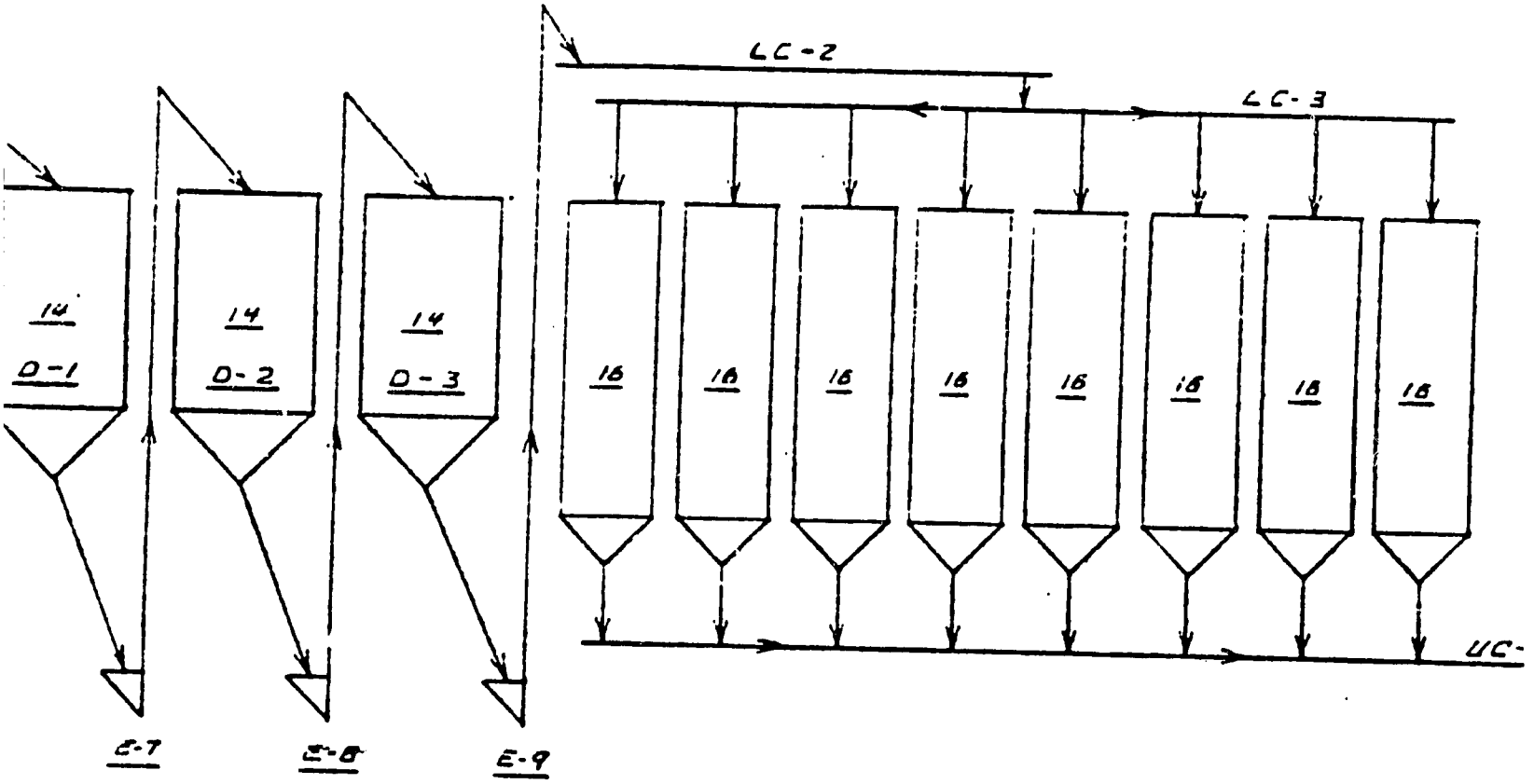

ACILITY

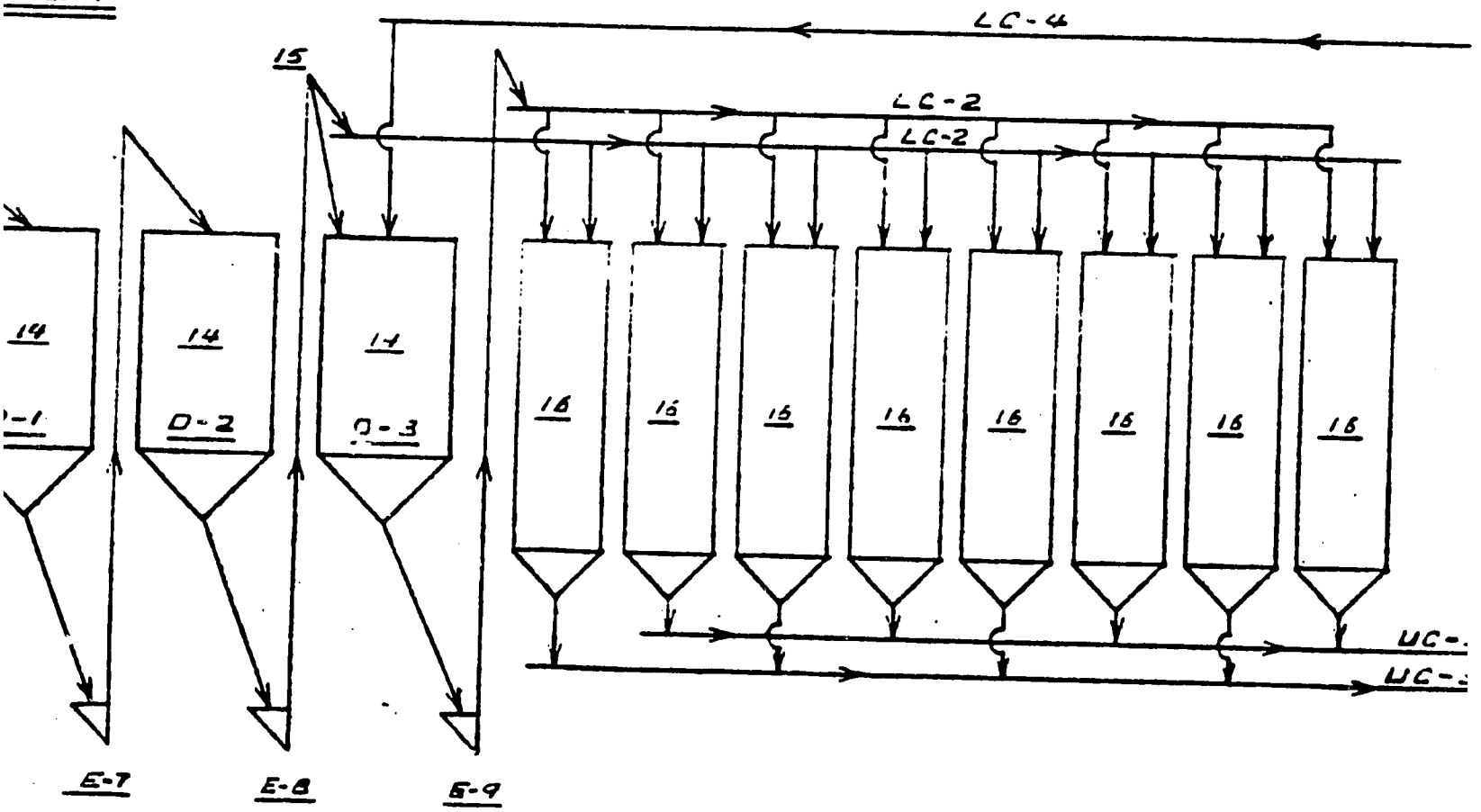

ACILITY

DRYING - TEMPERING - STORAGE

31

31

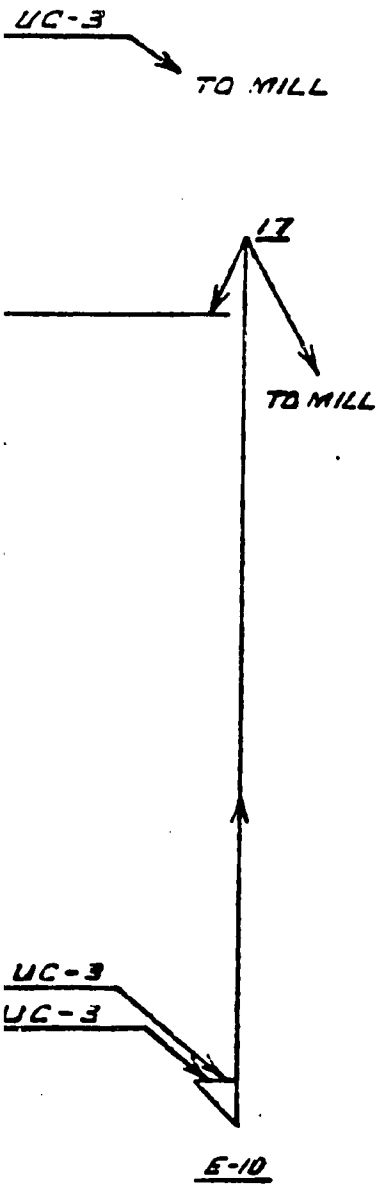

LEGEND

1 – RECEIVING BIN
2 – WORKING BIN
3 – SEIVE ASPIRATOR CLEANER
4 – AUTO-SCALE
5 – STEEPING TANKS
6 – HAND OPERATED VALVES
7 – INLET VALVE OF AUTOCLAVE
8 – AUTOCLAVE
9 – OUTLET VALVE OF AUTOCLAVE
10 – WATER PUMP
11 – WATER HEATER
12 – ROTARY DRIER
13 – FAN
14 – COLUMN DRIER
15 – GRAIN DIVERTER - TO DRIER NO. 3 OR TEMPERING BINS
16 – TEMPERING BINS
17 – GRAIN DIVERTER - TO DRIER NO. 3 OR MILL

— ELEVATORS —

E-1 RECEIVING ELEVATOR
E-2 CLEANER ELEVATOR
E-3 AUTO-SCALE ELEVATOR
E-4 STEEPING TANK ELEVATOR
E-5 AUTOCLAVE ELEVATOR
E-6 ELEVATOR TO DRIER NO. 1
E-7 ELEVATOR TO DRIER NO. 2
E-8 ELEVATOR TO DRIER NO. 3 OR TEMPERING BINS
E-9 ELEVATOR TO TEMPERING BINS
E-10 ELEVATOR TO MILL OR CONVEYOR TO DRIER NO. 3

— CONVEYORS —

LC-1 CHAIN LOAD CONVEYOR TO STEEPING TANKS
LC-2 CHAIN LOAD CONVEYOR TO TEMPERING BINS
LC-3 AUGER LOAD CONVEYOR TO TEMPERING BINS
LC-4 CHAIN LOAD CONVEYOR TO DRIER NO. 3
UC-1 CHAIN UNLOAD CONVEYOR FROM RECEIVING BIN
UC-2 CHAIN UNLOAD CONVEYOR FROM STEEPING TANKS
UC-3 CHAIN UNLOAD CONVEYOR FROM TEMPERING BINS

— DRIERS —

MEET TODAY'S RICE DRYING CHALLENGE HEAD ON WITH THE WORLD'S CLEANEST AND SAFEST DRYER

RICE DRYERS

HC

THE INSIDE STORY OF SHANZER DRYI

2 WORLD'S SAFEST, CLEANEST, MOST POPULAR DRYER

Obstruction free columns with no restriction to the flow of rice. No ledges. No baffles. No hangup in the column. Nothing to cause sticky rice or larger foreign materials to lodge and create a safety hazard. In a Shanzer, a wall of steel separates the rice in the column from the burner and fan. Any foreign material (dust, etc.) that does escape from the drying column quickly settles in the Shanzer's galvanized all weather enclosure which surrounds the columns. Non-plugging . . . self-cleaning . . . no downtime with Shanzer, no maintenance problems.

3 HIGHEST AIR FLOW — LOW OPERATING TEMPERATURE

Lowest operating temperature provides a better quality dried product. No dryer uses more cubic feet of warm air per minute per bushel of rice in process than Shanzer. This means high evaporation — evaporation, being a cooling process, always keeps the rice temperatures lower to maintain the quality of the dried product. The Shanzer fan, which is made specifically for the Shanzer Dryer — thoroughly mixes the heat from the burner before entering the dryer. Compare the Shanzer special all bolted construction on the fans with standard construction. You'll like the difference.

1 EXCLUSIVE SHANZER DESIGN

This proven design combines high capacity drying and discharge into one smooth operation. You can dry MORE rice for LESS money in a shorter length of time, in a warm perfect condition with Shanzer than with any other dryer. Less holding capacity is required by as much as 50% to produce the quantity of dry rice desired. Unique "ADD ON" feature lets you combine 2, 3, 4 or more units for one common enclosure for up to 5,000 and more bushels per hour capacity. Saves on housing, equipment, installation costs . . . and saves you valuable space.

THE HART•CARTER SERVICE ORGANIZATION
a nation-wide staff of servicemen and autho
with years of dryer experiance to meet y
promptly! These company trained men are lo
and equipped to give the best dryer service
service organization for the world's finest dry

9 GREAT MODELS AVAILABLE Gas or oil fire
every space and capacity need ECONO A
Custom models are a specialty with Hart•Ca

Best Available Document

UPERIORITY
SHANZER
4 ADJUSTABLE POSITIVE ACTION DISCHARGE
Provides more discharge area per square foot of column and is open to inspection. An enclosed, variable speed motor with chain drive and corrosion-resistant magnesium discharge mechanism gives positive, uniform discharge action — makes out an even, continuous flow. Slip clutch under columns eliminates gear stripping should large foreign objects get to the mechanism. Adjustable gates above winged feed rail provide easy accessibility and controlled flow.
5 FACTORY ASSEMBLED
Gas manifold and control panel are safety tested and preassembled to simplify installation. There's nothing left to chance with a Shanzer Rice Dryer. You're assured of easier, faster, safer, and more accurate erection.
h a full-time Service Manager who, with
d service agents, provides trained men
service requirements efficiently and
d strategically throughout the country
n the world's finest and largest dryer
SHANZER.
r models available to meet your
FFICIENTLY — COMPLETELY!
Shanzer.

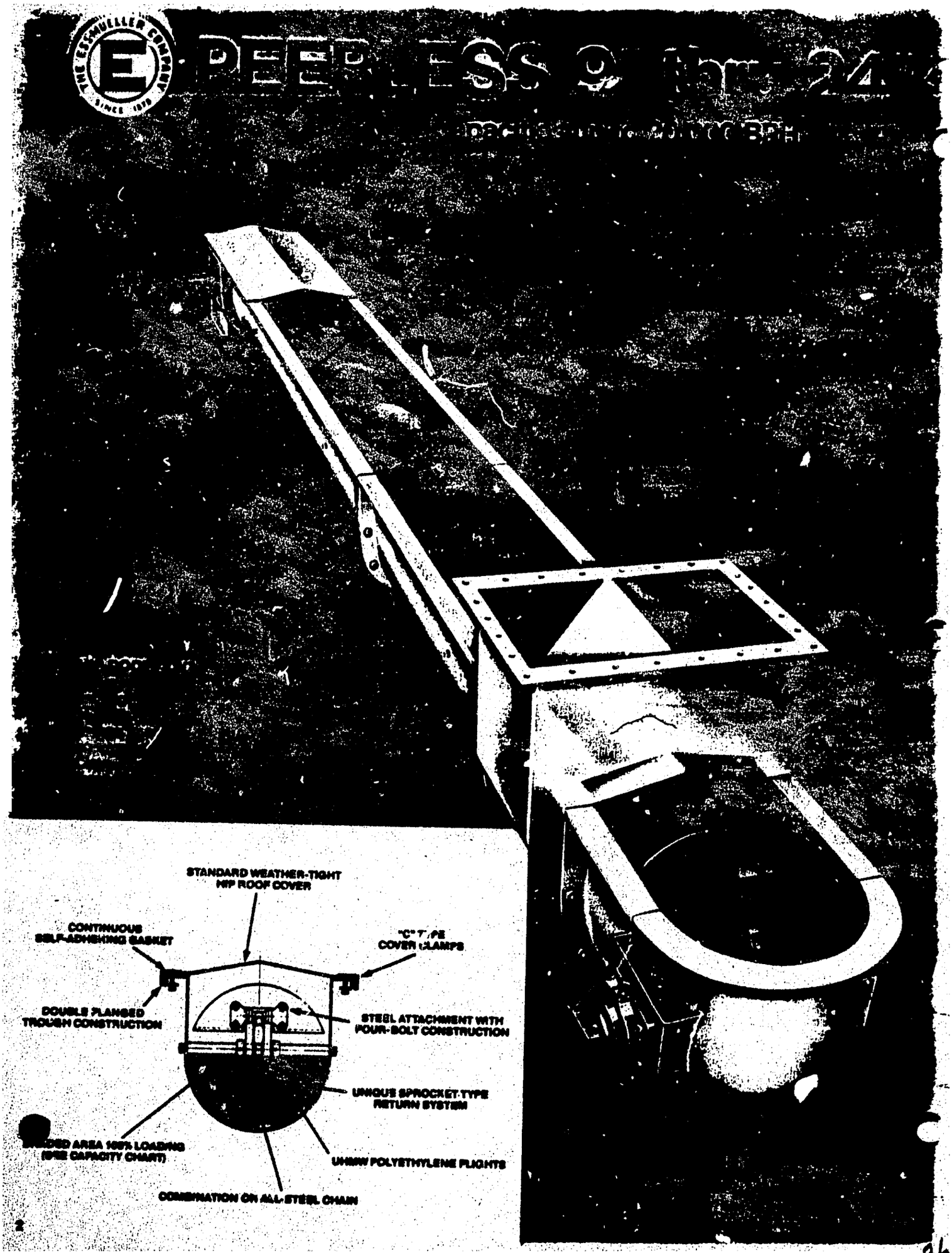
THE ESSMUELLER COMPANY
SINCE 1919
PEERLESS
STANDARD WEATHER-TIGHT
HIP ROOF COVER
CONTINUOUS
SELF-ADHERING GASKET
"C" TYPE
COVER CLAMPS
DOUBLE FLANGED
TROUGH CONSTRUCTION
STEEL ATTACHMENT WITH
FOUR-BOLT CONSTRUCTION
UNIQUE SPROCKET-TYPE
RETURN SYSTEM
UHMW POLYETHYLENE FLIGHTS
COMBINATION ON ALL-STEEL CHAIN

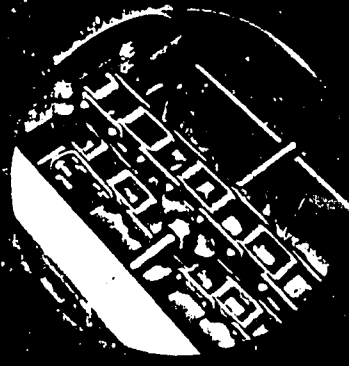

UNIQUE SPROCKET IDLER RETURN SYSTEM

CONTOUR-SHAPED FLIGHTS AUTOMATICALLY CLEAN TROUGH

optional features

Shaft-Mounted Drives are available on Peerless Drag-Flite Conveyors. The compact reducer mounts directly on an extended drive shaft and is totally enclosed for clean, trouble-free performance.

Essmueller maintains a large inventory of drives, in varying output speeds and horsepower requirements, to accommodate most requirements without delay.

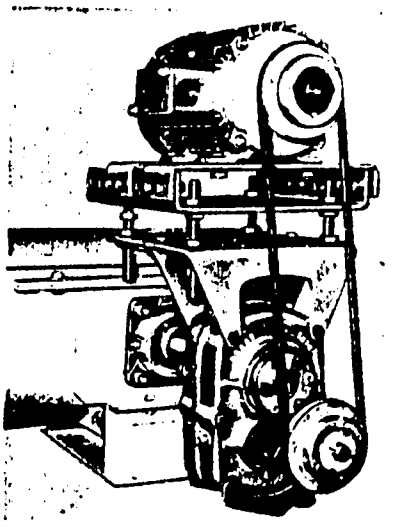

(OSHA Safety Guard not shown)

By-Pass Inlet diverts and balances flow of incoming materials around return flights to trough bottom—assures an even distribution and uninterrupted flow of material for peak efficiency.

Special extended length by-pass inlets (shown by dotted line) and custom-made feed inlet sections are available for use under surge bins and pit hoppers.

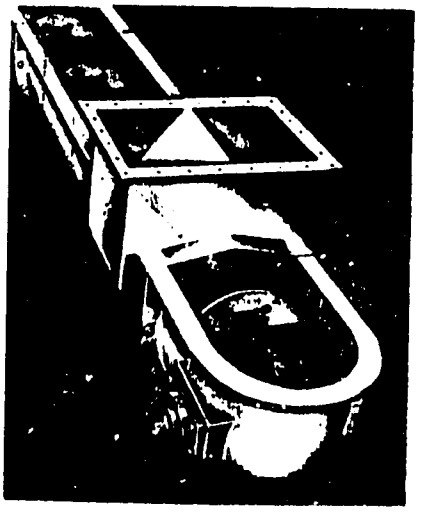

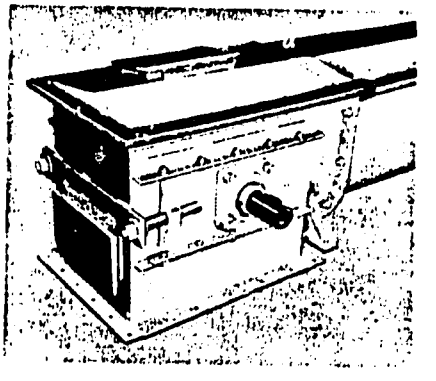

Hinged Inspection Door provides quick access for observing operation. Turned door edges keep materials free of moisture, dirt and eliminate dust build-up.

Optional Relief Door provides overflow protection.

Bend Sections are available for applications requiring both horizontal and inclined conveying. Sections can handle angles up to 30 degrees.

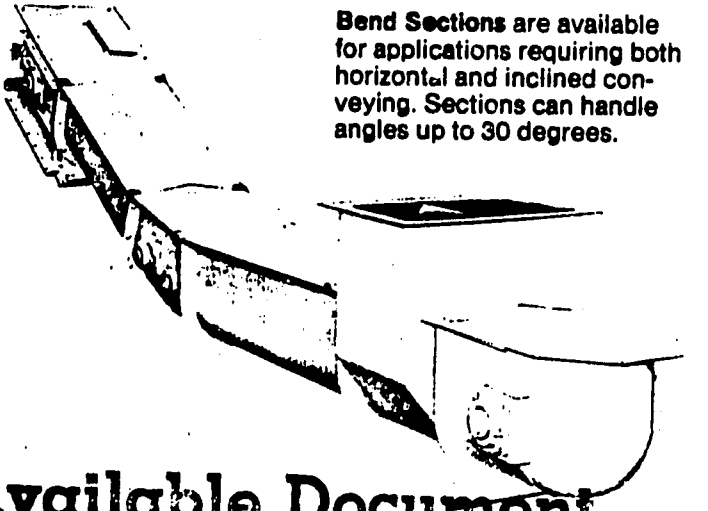

Best Available Document

F.P.M.	SIZE (INCHES)	CAPACITY*		R.P.M.	TERM. HP.	HP/FT. SHAFT CTRS.	CONVEYOR LGTH. AND HP.				MAX CONV. LGTHS.
		C.F.H.	B.P.H.				CAST CHAIN	STD. HD. SHAFT	STEEL CHAIN	SPEC. HD. SHAFT	
100	9	1875	1500	80	.2	.021	220	8.7	390	8.7	390
	12	3125	2500	50	.2	.032	215	8.0	305	11.2	460
	14	4435	3550	45	.3	.044	150	7.2	220	10.1	320
	16	5625	4500	38	.4	.055	115	8.9	260	15.0	310
	18	7310	5850	32	.5	.068	140	12.6	240	20.1	450
	20	8810	7050	32	.6	.089	105	12.6	210	20.1	430
	24	14865	11850	24	.9	.129	65	9.4	110	15.1	220
	30	22375	17900	22	1.9	.224	35	13.8	100	29.8	200
	36	34685	27750	20	2.5	.307	35	19.0	90	40.0	130
125	9	2310	1850	100	.3	.026	220	10.8	390	10.8	390
	12	3875	3100	63	.3	.040	215	10.1	305	14.8	460
	14	5500	4400	57	.4	.055	150	9.1	220	13.4	320
	16	7000	5600	48	.5	.068	115	11.3	260	18.9	310
	18	9125	7300	40	.6	.085	140	15.7	240	25.2	450
	20	11000	8800	40	.7	.111	105	15.7	210	25.2	430
	24	18580	14850	30	1.1	.162	65	11.8	110	18.9	220
	30	27935	22350	28	2.3	.280	35	17.6	100	37.9	200
	36	43310	34650	25	3.1	.383	35	23.7	90	50.0	130
150	9	2810	2250	120	.4	.032	220	13.0	390	13.0	390
	12	4685	3750	75	.4	.048	215	12.0	305	17.7	460
	14	6625	5300	68	.5	.066	150	10.9	220	16.0	320
	16	8500	6800	57	.6	.082	115	13.4	260	22.4	310
	18	10935	8750	48	.7	.102	140	18.9	240	30.2	450
	20	13185	10550	48	.9	.133	105	18.9	210	30.2	430
	24	22295	17800	36	1.3	.194	65	14.1	110	22.7	220
	30	33560	26850	33	2.8	.336	35	20.8	100	44.7	200
	36	52000	41600	30	3.7	.460	35	28.5	90	60.0	130
175	9	3310	2650	140	.5	.037	220	15.2	390	15.2	390
	12	5435	4350	88	.5	.056	215	14.1	305	20.7	460
	14	7750	6200	79	.6	.077	150	12.7	220	18.6	320
	16	9875	7900	67	.7	.096	115	15.8	260	26.3	310
	18	12750	10200	56	.8	.119	140	22.0	240	35.3	450
	20	15375	12300	56	1.0	.155	105	22.0	210	35.3	430
	24	26010	20800	42	1.5	.226	65	16.5	110	26.5	220
	30	39125	31300	38	3.3	.392	35	23.9	100	51.4	200
	36	60685	48550	35	4.3	.537	35	33.2	90	70.0	130

approximate shipping weights

DRAG SIZE (INCHES)	HEAD TERM.			TAIL TERM.			B.P.I.		INTER. SECTION/FT.		
	SHAFT DIA.	WGT. LBS.	GA.	SHAFT DIA.	WGT. LBS.	GA.	WGT. LBS.	GA.	WGT. LBS.	TROUGH GA.	COVER GA.
9	1 15/16	130	12	1 7/16	55	12	70	12	30	12	16
12	2 3/16	200	10	1 15/16	90	10	110	10	40	10	14
	2 7/16	220									
14	2 3/16	220	10	1 15/16	110	10	140	10	42	10	14
	2 7/16	240									
16	2 7/16	270	10	2 1/16	145	10	155	10	50	10	14
	2 11/16	300									
18	2 15/16	360	10	2 7/16	200	10	230	10	62	10	14
	3 7/16	400									
20	2 15/16	420	10	2 7/16	250	10	280	10	68	10	14
	3 7/16	460									
24	2 15/16	500	10	2 7/16	280	10	360	10	80	10	14
	3 7/16	560									
30	3 7/16	1075	7	2 15/16	815	7	650	7	135	7	12
	4 7/16	1225		3 7/16	865						
36	3 15/16	1600	7	2 15/16	1140	7	990	7	195	7	12
	5 7/16	2110		3 7/16	1190						

Since 1878 The Essmueller Company has specialized in designing, engineering and manufacturing a wide variety of equipment for fast, efficient and economical handling of bulk materials.

Essmueller's experienced and highly qualified engineering staff is available for consultation on almost any conveying problem. They will be glad to make suggestions and recommendations regarding the most efficient conveyor to use for your particular type of bulk materials. Naturally, there is no obligation.

Before you buy any conveyor or bulk material handling equipment make sure you see the man from Essmueller. Chances are he can save you time and money—and increase the efficiency of your conveyor operation.

Specifications subject to change without notice.

other premium "PEERLESS" products manufactured by ESSMUELLER:

Model "F" en-masse conveyors
Centrifugal bucket elevators
Continuous bucket elevators
Screw conveyors and components
Screw feeders
Flat belt conveyors
Slider belt conveyors
Troughing belt conveyors
Distributors (manual and electric)
Horizontal batch mixers and blenders
Self-cleaning elevator boots
Bucket valves (manual, pneumatic, electrical)
Flat and contour slide gates (manual, rack and pinion, hydraulic, pneumatic, electrical)
Continuous elevator buckets
Hoppers, scale-hoppers, spouting

The ESSMUELLER Co.
1220 SOUTH EIGHTH STREET • ST. LOUIS, MISSOURI 63104
PHONE: 314/241-3223
Plants: St. Louis, Missouri/Laurel, Mississippi/Walnut Ridge, Arkansas

Form No D500B-128110M

PRINTED IN U.S.A.

PHONE 783.1420

GREEN'S HARDWARE AND MACHINERY COMPANY

SHEET METAL AND MACHINE SHOP · MILL SUPPLIES · CONVEYORS AND ELEVATORS · STEEL FABRICATION

Manufacturers & Distributors

CROWLEY, LOUISIANA

P. O. BOX 426

318

5 X 4 ELEVATOR CAPACITIES E-10

PULLEY DIAMETER	BELT SPACING	Cu.Ft/Hr. 60%	Cu.Ft/Hr. 100%	BARRELS RICE/Hr. 60%	BARRELS RICE/Hr. 100%	BUSHELS/Hr. 60%	BUSHELS/Hr. 100%	TONS/Hr @ 60#/Cu.Ft. 60%	TONS/Hr @ 60#/Cu.Ft. 100%
18"	6"	670	1117	159	265	541	901	21	34
	7"	570	950	135	225	460	766	17	29
	8"	502	836	119	198	404	674	15	25
20"	6"	745	1241	176	294	600	1000	11	37
	7"	634	1056	150	250	511	852	10	32
	8"	557	929	132	220	449	749	8	28

ALLIS-CHALMERS GEARHEAD 230 RPM. OUTPUT;
HEAD PULLEY RPM. IS 67; SPEED RATIO IS 3.432
DRIVER 20 TEETH DRIVEN 70 TEETH

HEIGHT OF ELEVATOR	MOTOR HP. REQ'D	CHAIN	BORE OF DRIVER	HEAD PULLEY SHAFT DIAMETER
0 - 30 FT	1½	40	1-3/8"	1-7/16"
30 - 60 FT	2	40	1-3/8"	1-7/16"

BELT RECOMMENDATIONS: WEIGHT 32 OZ. SQUARE CUT, 6 IN. WIDTH, 4 PLY TO 60'-0"

NOTE: IF THE CUPS ARE NOT EXPECTED TO BE MORE THAN 50% FULL THE NEXT SIZE SMALLER HORSEPOWER MOTOR MAY BE USED.

40

Best Available Document

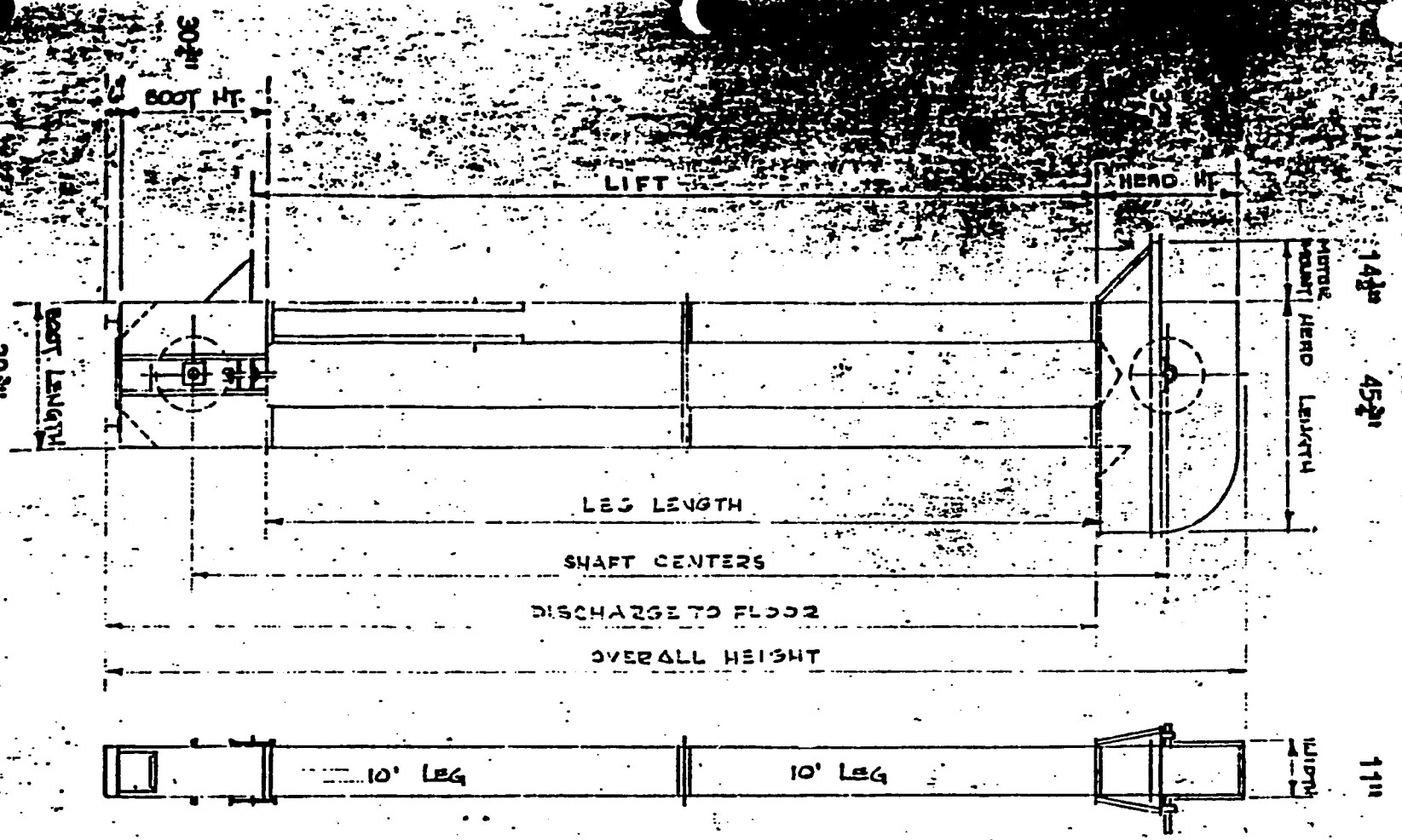

5 x 4 ELEVATOR SYSTEM E-10

BUCKET ELEVATOR DIMENSIONS	REVISIONS			GREEN'S HARDWARE AND MACHINERY COMPANY CROWLEY, LA.		
	NO.	DATE	BY			
	1			DRAWN BY FELLESDAN	SCALE NONE	SHEET 1 OF 1
	2			CHK'D	DATE 1 SEPT 64	DRAWING NO. S-010C
	3			JOB NO.	APP'D	

SC 175H BLUTEX 2-62