PN-AAN-302
ISN 30062

Report No. 14003.07-E(B)-1

9361406/62
AID Library

ELECTRIFICATION STUDY

FOR

MAIZE AND OIL SEEDS PRODUCTION PROJECT

AND

WAKEMA PILOT IRRIGATION PROJECT

Prepared for
United States of America
Agency for International Development
Contract No. OTR-1406-I-1142-00

by
M.D. Robinson
March 1983

Approved by: James G. Dolan
Chief Engineer,
Electrical Division

Engineering Manager

C9031 78

Stone & Webster Engineering Corporation
Boston, Massachusetts 02107

ISN 30001
Bard

NOTICE

"This report was prepared with the support of the U.S. AID. However, any opinions, findings, conclusions, or recommendations expressed herein are those of the author(s) and do not necessarily reflect the views of U.S. AID. Neither U.S. AIR, nor Stone & Webster, nor any person acting on behalf of either; (a) Makes any warrantly or representation, express or implied, with respect to the accuracy, completeness, or usefulness of the information or that the use of any information, apparatus, method or process disclosed in this report may not infringe privately owned rights; or (b) Assumes any liability with respect to the use of or for damages resulting from the use of, any information, apparatus, method or process disclosed in this report."

TABLE OF CONTENTS

Section	Title	Page
1	Summary	
2	Introduction	
3	Project Description	
4	Electric Power Requirements	
5	System Capability	
6	Cost Estimates	
7	Conclusions	
8	References	

Table	Title
1	Estimated Electric Power Requirements
2	Electrical Cost Summary
3	Component Costs
4	Unit Costs

Figure	Title
1	One Line Diagram - Thitcho Farm
2	One Line Diagram - Kyaung Su Farm
3	One Line Diagram - Sebin Farm
4	One Line Diagram - Chung Ma Gyi Farm
5	One Line Diagram - Wakema Irrigation Project
6	Voltage Profiles - Wakema Irrigation Project
7	Electrical Load Schedule - Thitcho Farm
8	Electrical Load Schedule - Kyaung Su Farm
9	Electrical Load Schedule - Sebin & Chung Ma Gyi Farms

SECTION 1

SUMMARY

The Stone & Webster Engineering Corporation review of the studies and reports concerning the electrical systems indicate that the designs will provide the services required and the estimates appear reasonable.

SECTION 2

INTRODUCTION

In January, 1983, the United States Agency for International Development (USAID) requested Stone & Webster Engineering Corporation (SWEC) to assist the Agricultural Corporation of Burma in the development of high voltage electrical facilities for the Maize and Oil Seeds Production Projects (MOPP) and the Wakema Township Irrigation Project. SWEC was requested to perform the following specific tasks.

- Determine the electrical power and equipment requirements for four seed production farms.
- Determine the electrical power and equipment requirements for the Wakema pilot irrigation project.
- Assess the ability of the existing distribution systems to furnish adequate electric service for the proposed projects.
- Prepare specifications for diesel generators, transformers, bare conductor and other electrical items that are not manufactured in Burma.
- Prepare cost estimates and assist in the development of implementation plans to provide electrical power for the proposed projects.

Mr. M.D. Robinson visited Burma in February, 1983 to perform the study. At the conclusion of his visit, he presented his conclusions and estimates to MOPP and USAID/Burma in Rangon so that they could begin to formulate plans for project implementation. The report documents the results of the study.

V

SECTION 3

PROJECT DESCRIPTION

3.1 Maize and Oil Seed Production Project

Purpose

The purpose of the project is to increase the production of maize and oil seed (sunflower, sesame, and peanut) crops by establishing four seed farms in rural areas of Burma. The goals of the project are to improve farming methods, increase the food supply and reduce Burma's dependence on foreign sources of cooking oils. The success of the project is dependent on an adequate source of electricity at each farm to power seed handling equipment and irrigation pumps. The following is a brief description of the sites to be developed. A detailed description of the proposed farms is contained in the Mississippi State University report dated July 28, 1982. [1]

Thitcho Farm

This farm is located in Natalin Township, Pegu Division, which is approximately 120 miles northwest of Rangoon. Plans call for the development of 3,000 acres at this site. The nearest source of electrical power is an 11kV distribution system in Natalin, approximately 9 miles from the farm load center.

Kuang Su Farm

This farm is located Kyauktaga Township, Pegu Division, which is approximately 100 miles northeast of Rangoon. 800 acres will be developed at this site. The nearest source of power for this farm is an 11kV distribution line in Penwegon, approximately 3 miles from the farm load center.

Sebin Farm

This farm is located in Yamethin Township, Mandalay Division, which is approximately 250 miles north of Rangoon. 300 acres will be developed at this site. A 33kV distribution line traverses the farm.

Chung Ma Gyi Farm

This farm will consist of 300 acres located in Pyawbwe Township, Mandalay Disivion, approximately 10 miles north of the Sebin site. A 33kV distribution line also traverses this site.

3

3.2 Wakema Township Irrigation Project

Purpose

The purpose of this project is to provide electrified irrigation facilities in Wakena Township, located in the Irawaddy delta, approximately 65 air miles from Rangoon. Introduction of electric pump irrigation methods in this area will permit the cultivation of oil producing crops during the non-monsoon season.

Description

A detailed description of this project is contained in the Agricultural Corporation Report, dated October 6, 1982. The basic plan is to install 50, 5 horsepower pumps along a short section of the Lanthabine River. The pumps will be low lift types since the maximum lift will be approximately 6 ft. To obtain electrical power, it is proposed to construct multiple taps in the existing Wakema - Kyonmange 11kV circuit. Power will be distributed to the pumps at 400 V.

4

SECTION 4

ELECTRIC POWER REQUIREMENTS

Estimates of power requirements for each of the farms in the MOPP project and for the Wakena Irrigation Project, were developed in Burma, by consultations with representatives of USAID/Burma and MOPP. Items considered were power requirements for seed processing, drying and storage, office facilities, housing facilities and irrigation pumps. Requirements for seed handling were based primarily on the Mississippi State University Report. [1] The estimated requirements for each site are given in Table 1.

The electrical loads presented in the tables, should be considered as preliminary since the facilities have not been designed, and equipment has not been purchased. Since the information is preliminary, no load diversity factors were applied to the connected load totals. Figures 7 to 9 show the anticipated yearly use of power for each farm.

One-line diagrams for the facilities are shown in Figures 1-5. For estimating purposes, it was assumed that the pumping loads at each farm will be served at 11kV due to the distances involved between the farm substation and pump locations, and the fact that there are no other voltage levels between 11 and 0.4kV in Burma. A diesel generator was provided at each farm to assure reliable power for the critical process and drying activities.

The expected operation of the Wakema Township Irrigation District electrical system is shown on Figure 6. With the estimated loads as shown on Figure 5 the voltage drop on the 11 kV line from Wakema to Kyonmange should not exceed 6-7 percent.

The length of 400 V feeders to pump motors will depend on providing adequate voltage for starting the motor. Calculations indicate that to limit the voltage drop to 10-12 percent when starting a 5 hp, 400 V motor the length of a feeder should not exceed the following:

#8 Copper Conductors - 1000 to 1500 ft

#6 Copper Conductors - 1500 to 2200 ft

#4 Copper Conductors - 2200 to 3400 ft

SECTION 5

SYSTEM CAPABILITY

On February 15, 1983, a meeting was held with representatives of the Electric Power Corporation (EPC) to discuss MOPP requirements and to determine if the existing EPC systems are capable of supplying adequate electric service for the proposed projects. The results of this meeting are documented in Appendix A of this report, and are summarized below:

It should be noted that EPC did not offer to substantiate the reasons for their recommendations, and a load flow study of the Burma system is not within the scope of this assignment. However, based on visual inspection of the lines and substations in the vicinity of the proposed projects, SWEC has no technical reason to disagree with the EPC recommendations.

Thitcho Farm

EPC stated that adequate service can be provided for Thitcho from the distribution system at Natalin. However, MOPP must fund the cost of the 9 miles of 11kV line to the farm, and the cost of the 11/0.4kV substation at the site.

Kyaung Su Farm

EPC stated that since the source of power at Penwegon is at the end of a relatively long 11kV circuit that is heavily loaded, EPC would like to investigate further before commenting on system capability at this location.

Sebin Farm

EPC stated that the most economical way to serve this load would be to construct an 11kV line from Pyawbwe. Although there is a 33kV line on site, EPC felt that the cost of 33/0.4kV transformation, if feasible, would exceed the cost of constructing an 11kV line from Pyawbwe.

MOPP would have to fund the cost of 5 miles of 11kV line between Pyawbwe and Sebin, and the cost of constructing the 11/0.4kV substation on site.

Chung Ma Gyi Farm

Following the same reasoning given for Sebin, EPC recommended extending an 11kV line from Pyawbwe. In this case, MOPP would have to fund the cost of 7 miles of 11kV line and the cost of the 11/0.4kV substation on site.

6

Wakema Irrigation Project

To provide adequate service for the irrigation project MOPP would have to fund the cost of a 33/11kV, 1250kVA, substation at Wakema, the seven 11/0.4kV substations and the 0.4kV distribution systems for the pumps.

7

SECTION 6

COST ESTIMATES

After an inspection of each site, discussions with local EPC representatives and discussions with EPC/Rangoon, cost estimates were developed to enable MOPP to complete plans for project implementation.

During discussions with local EPC representatives, cost estimates were obtained for previous EPC work in the various areas. These estimates were consistent and included all of the major items required to perform the work in accordance with EPC standard designs. Therefore, these estimates were used as a basis for costs developed by SWEC. The EPC costs were escalated to reflect 1983 prices in Burma and, where necessary, prices were modified to account for the purchase of foreign material and equipment.

Table 2 tabulates the estimated direct cost for the construction of high voltage facilities for each site in accordance with the criteria established by EPC/Rangoon.

For the MOPP program, the estimates include the cost of electrical facilities from the point of connection with the local EPC system to the 400 volt transformer terminals at the farm substation. Also included is the cost of 11kV feeders and substations for the irrigation pumps.

For the Wakema program, the estimates include the cost of electrical facilities from the points of connection to the local EPC system to the 400 volt terminals of the local pump substations.

These estimates do not include the cost of 400V equipment on the farms, and do not include the costs of electric pumps. Also, the estimates do not include indirect charges such as engineering services, procurement costs, allowance for indeterminates, etc.

Table 2 also shows the foreign currency ($US) required to purchase equipment that is not manufactured in Burma. This equipment includes insulators, guy and anchors, ACSR conductor, surge arresters, air break switches, fuses and diesel generators.

Table 3 shows the percentage of total costs for the major components of electrical supply for each of the farm sites.

8

Table 4 lists the estimated unit costs used to develop the data shown in Table 2. These unit costs can be used to adjust total costs for changes in final design.

9

SECTION 7

CONCLUSIONS

The review of the studies and reports concerning the electrical system for the various proposed agricultural projects indicate that the designs will provide the services required and the estimates appear reasonable.

In addition to the specific recommendations for each project the following general observations could be considered:

1. A trained electrican should be provided at each project to operate and maintain the electrical equipment. Reliability of operation is very important during processing air drying or when irrigation is required. It is also recommended that three phase motors be used as much as possible to provide maximum reliability with minimum maintenance requirements.

2. Further investigation of equipment availability may suggest that 33-0.4 kV transformers to serve the Sebin and Chung Ma Gyi farm projects rather than the 5 mile and 7 mile 11 kV lines and 11-.4 kV substations proposed.

3. It is suggested that mounting of smaller transformers on single or simple two pole structures may be more economical than the ground mounted, fenced enclosure substation in general use.

4. Moving the Thitcho seed processing plant to Natalin might be considered. A good road is imperative for this alternative.

SECTION 8

REFERENCES

1. Seed Technology, Laboratory - Mississippi State University, Seed Equipment and Facility Recommendations for Maize and Oil Seeds Project, July 28,1982.

2. Burma Ministry of Agriculture & Forrests, Cultivation of Oil Producting Crops by Means of Lift Irrigation Utilization of Electrical Power in Wakema Township, October 6, 1982.

11

TABLE 1
ESTIMATED ELECTRIC POWER REQUIREMENTS

	Estimated Load (kVA)				
	Thitcho	Kyaung Su	Sebin	Chung Ma Gyi	Wakema
Seed Processing and Drying	160	100	100	-	-
Seed Storage	50	40	40	-	-
Office Facilities	20	10	10	10	-
Housing	70	50	50	40	-
Irrigation	150	75	50	40	250
Total Connected Load	450	275	250	90	250
*Estimated Transformer Sizes (kVA)	1-300 2-100	1-300 1-100	1-300 1-50	1-100 1-50	1-100 6-50

*Based on using transformers manufactured in Burma.

Only 50,100 and 300 kVA ratings are available.

TABLE 2

ELECTRICAL COST SUMMARY

	Site	Total Installed Cost Kyats	$ Equivalent	$ Required
1	Thitcho	1,466,000	188,000	154,000 (1)
2	Kyaung Su	902,000	116,000	96,000 (1)
3	Sebin	980,000	126,000	102,000 (1)
4	Chaung Ma Gyi	791,000	101,000	84,000 (1)
5	Wakema	1,742,000	223,000	(2)
	Total	5,881,000	754,000	

1. Based on using Burmese transformers.

2. Based on using one 1,250kVA transformer from the US and the balance of transformers from Burma.

TABLE 3

COMPONENT COSTS

Project	Total Electrical Cost (K)	Component Cost (%)		
		Transmission	Substation	Standby Generator
Thitcho	1,466,000	46	20	34
Kyaung Su	902,000	34	29	37
Sebin	980,000	41	25	34
Chung Ma Gyi	791,000	66	23	11

TABLE 4

UNIT COSTS

Component	Unit	TOTAL INSTALLED COST K	$ Equivalent	$ Required
11kV Line	Mile	61,000	7,800	6,700
400V Line	Mile	46,000	6,000	4,600
33/11kV Substation	EA	102,000	13,000	8,500
11/0.4kV Substation				
250kVA and Above	EA	100,000	13,000	8,100
Below 250kVA	EA	71,000	9,000	8,100
400V Standby Generator	KW	2,075	266	266
Burmese Transformers				
50kVA	EA	16,650	2,100	-
100kVA	EA	31,300	4,000	-
300kVA	EA	63,000	8,100	-
US Transformers				
50kVA	EA	21,200	2,700	2,700
112 1/2kVA	EA	50,000	6,400	6,400
150kVA	EA	54,600	7,000	7,000
225kVA	EA	63,700	8,200	8,200
300kVA	EA	68,000	8,700	8,700
500kVA	EA	85,000	10,900	10,900
1250kVA	EA	130,000	16,700	16,700

▲ 5010.1D

STONE & WEBSTER ENGINEERING CORPORATION

CALCULATION SHEET

Page No. _____
Preliminary _____
Item _____

Client	Location	Est. No.	J.O. No.
Subject		Date	By
		Checked	By
Based on		Revised	By

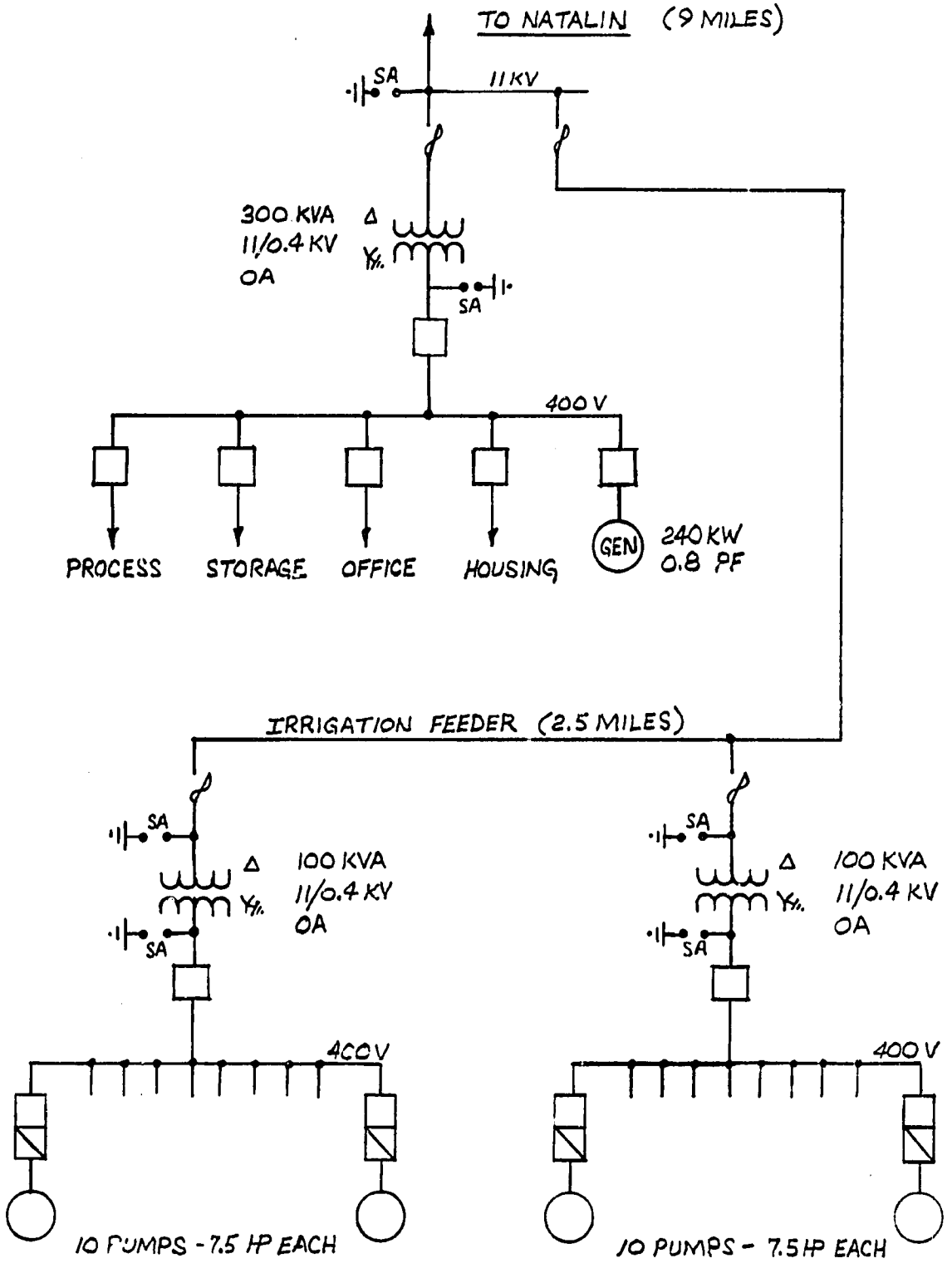

FIGURE 1
ONE LINE DIAGRAM
THITCHO FARM

▲ 5010.1D

STONE & WEBSTER ENGINEERING CORPORATION

CALCULATION SHEET

Page No. _____
Preliminary _____
Item _____

Client	Location	Est. No.	J.O. No.
Subject		Date	By
		Checked	By
Based on		Revised	By

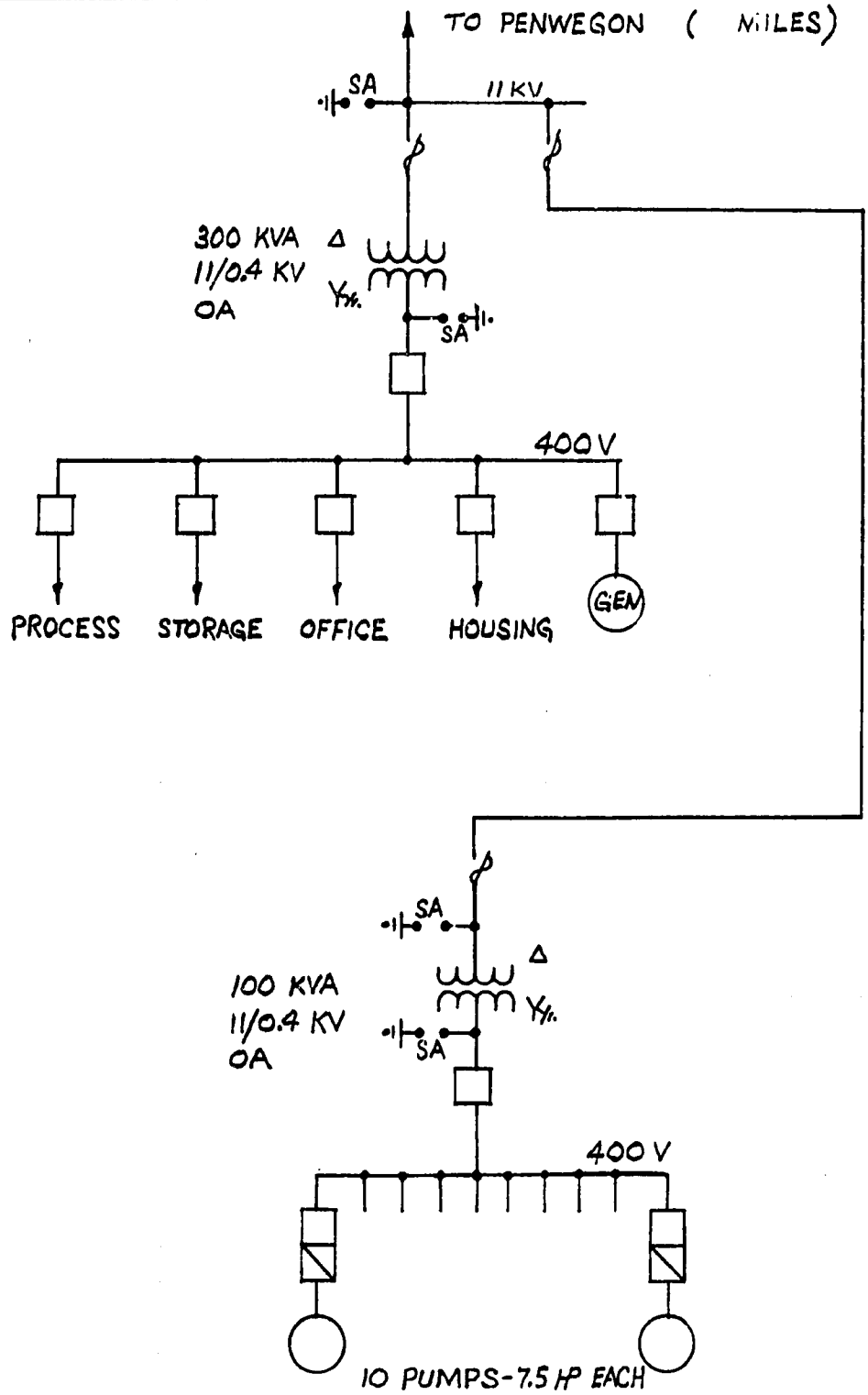

FIGURE 2
ONE LINE DIAGRAM
KUANG SU FARM

▲ 5010.1D

STONE & WEBSTER ENGINEERING CORPORATION

CALCULATION SHEET

Page No.
Preliminary
Item

Client	Location	Est. No.	J.O. No.
Subject		Date	By
		Checked	By
Based on		Revised	By

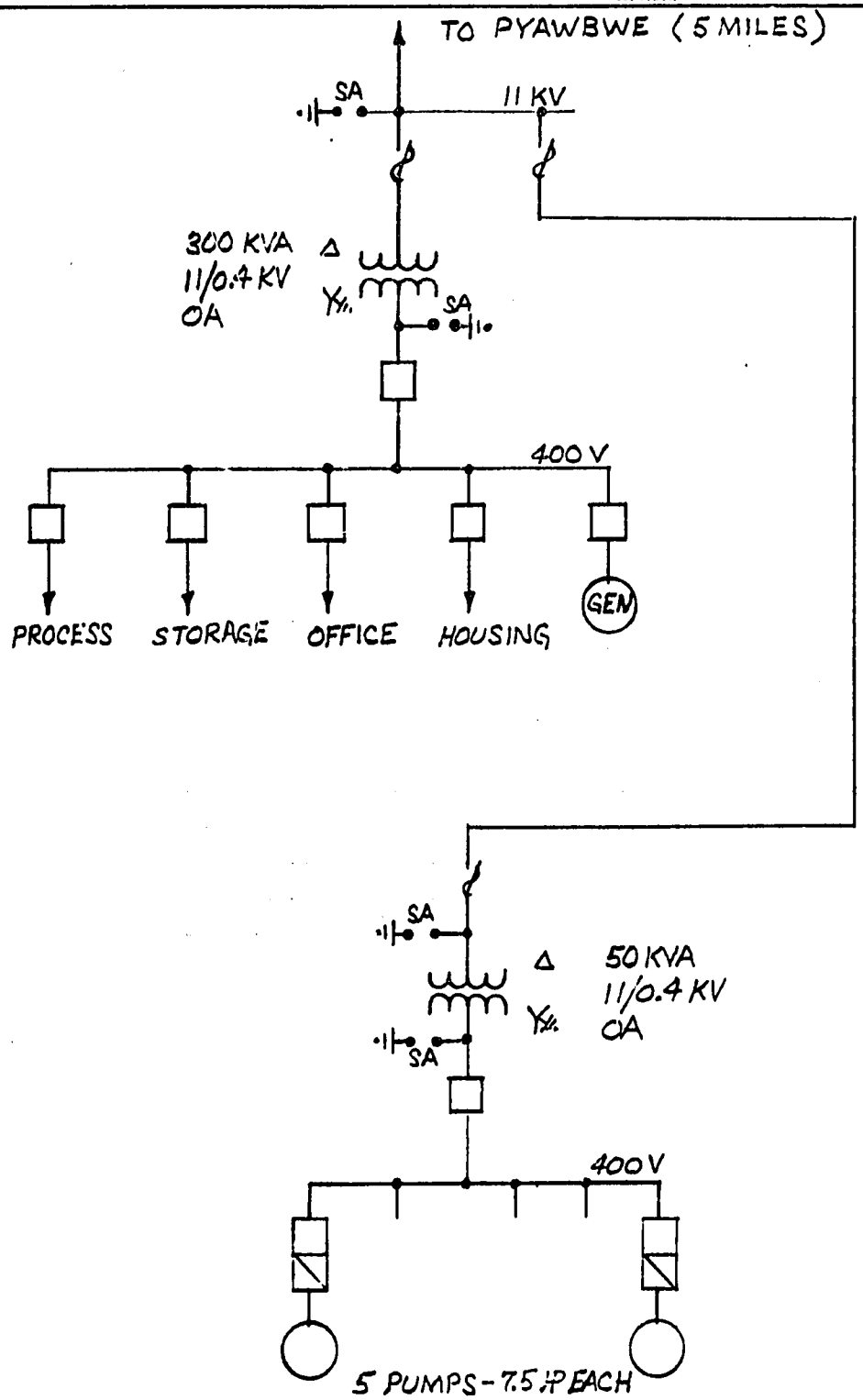

FIGURE 3
ONE LINE DIAGRAM
SEBIN FARM

▲ 5010.1D

STONE & WEBSTER ENGINEERING CORPORATION

CALCULATION SHEET

Page No. _____
Preliminary _____
Item _____

Client	Location	Est. No.	J.O. No.
Subject		Date	By
		Checked	By
Based on		Revised	By

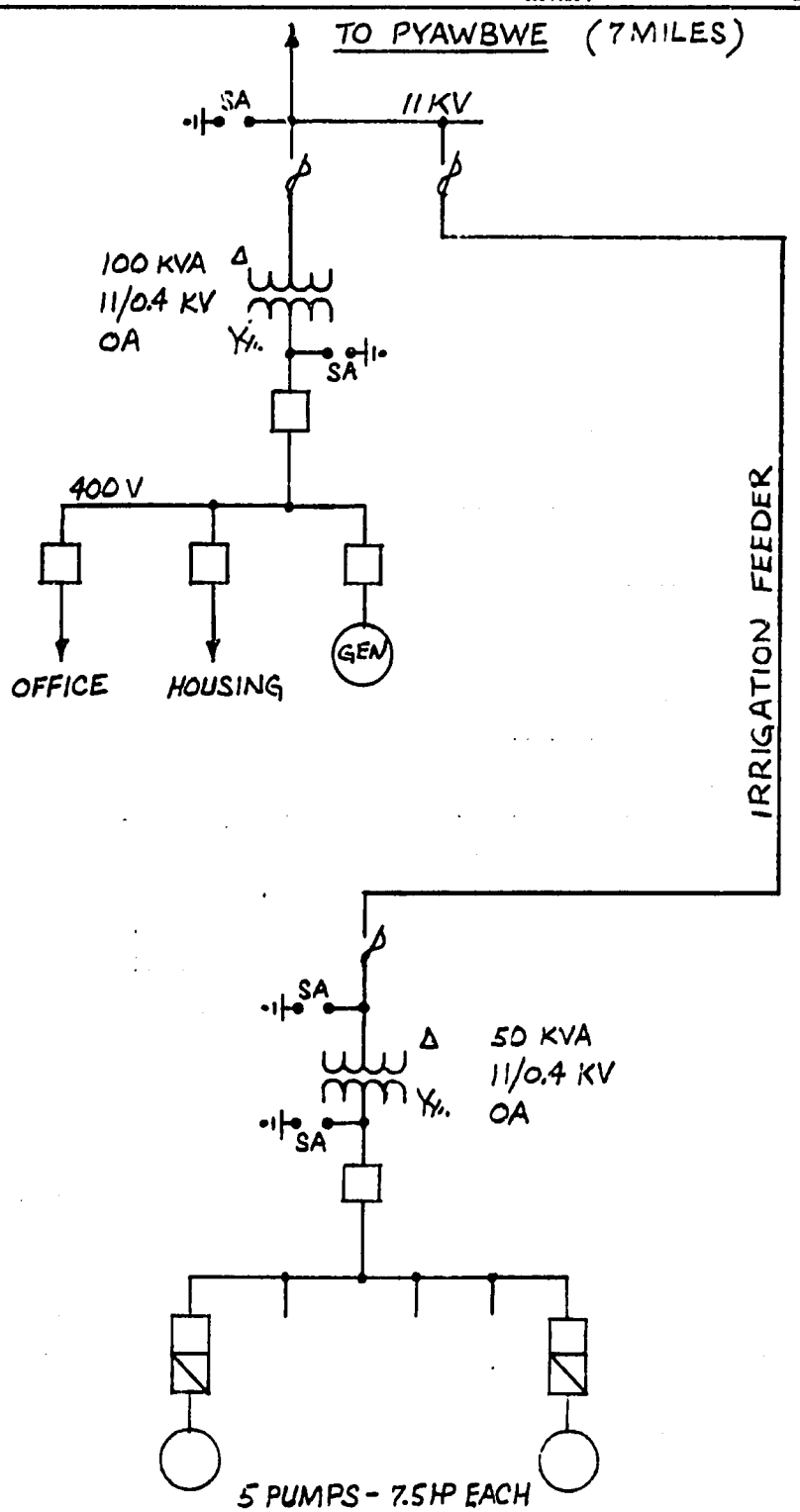

FIGURE 4
ONE LINE DIAGRAM
CHUNG MA GYI FARM

▲ 5010.1D

STONE & WEBSTER ENGINEERING CORPORATION

CALCULATION SHEET

Page No. _____
Preliminary _____
Item _____

Client	Location	Est. No.	J.O. No.
Subject		Date	By
		Checked	By
Based on		Revised	By

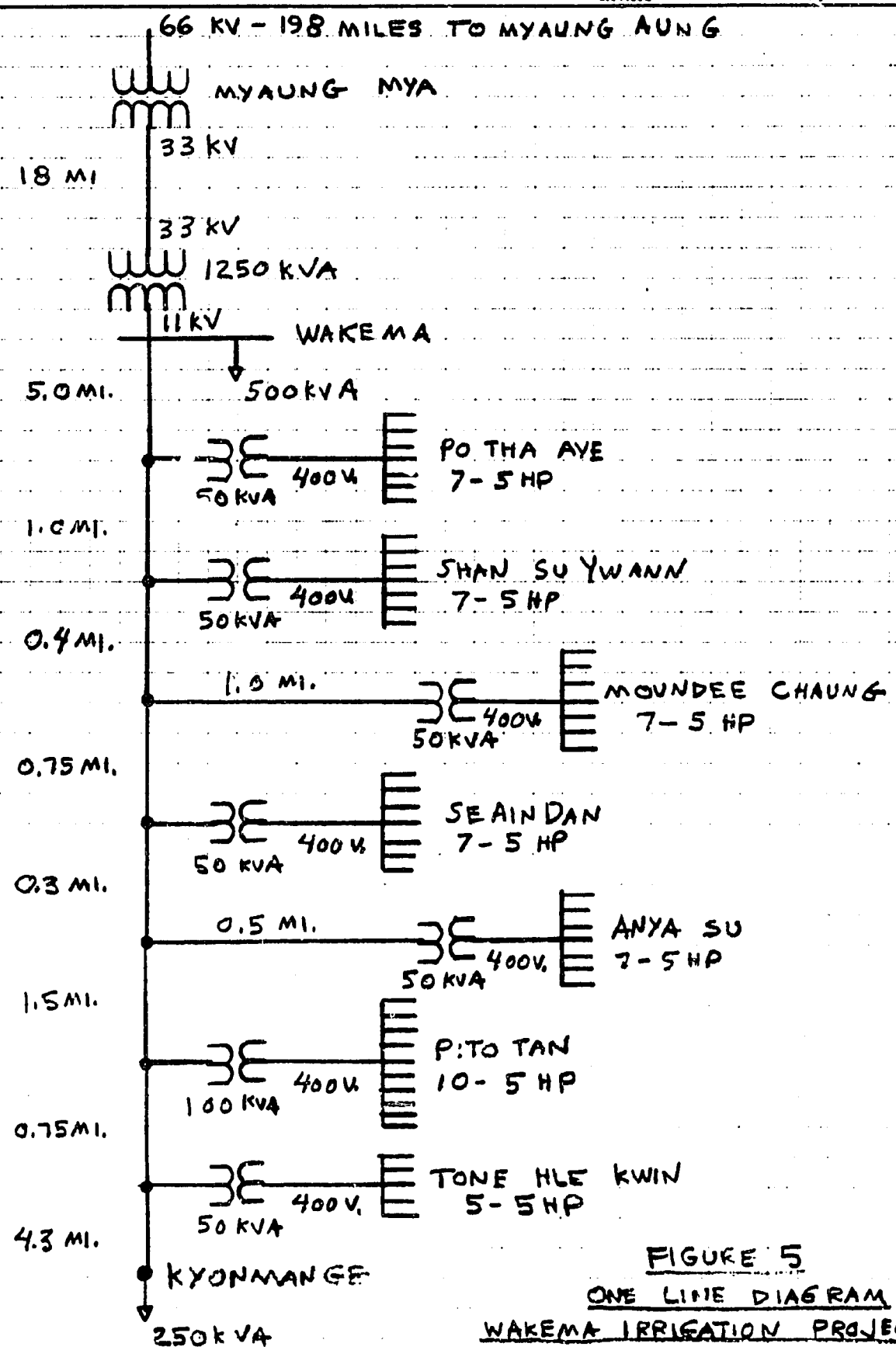

FIGURE 5

ONE LINE DIAGRAM

WAKEMA IRRIGATION PROJECT

▲ 5010.1D

STONE & WEBSTER ENGINEERING CORPORATION

CALCULATION SHEET

Page No. _____
Preliminary _____
Item _____

Client	Location	Est. No.	J.O. No.
Subject		Date	By
		Checked	By
Based on		Revised	By

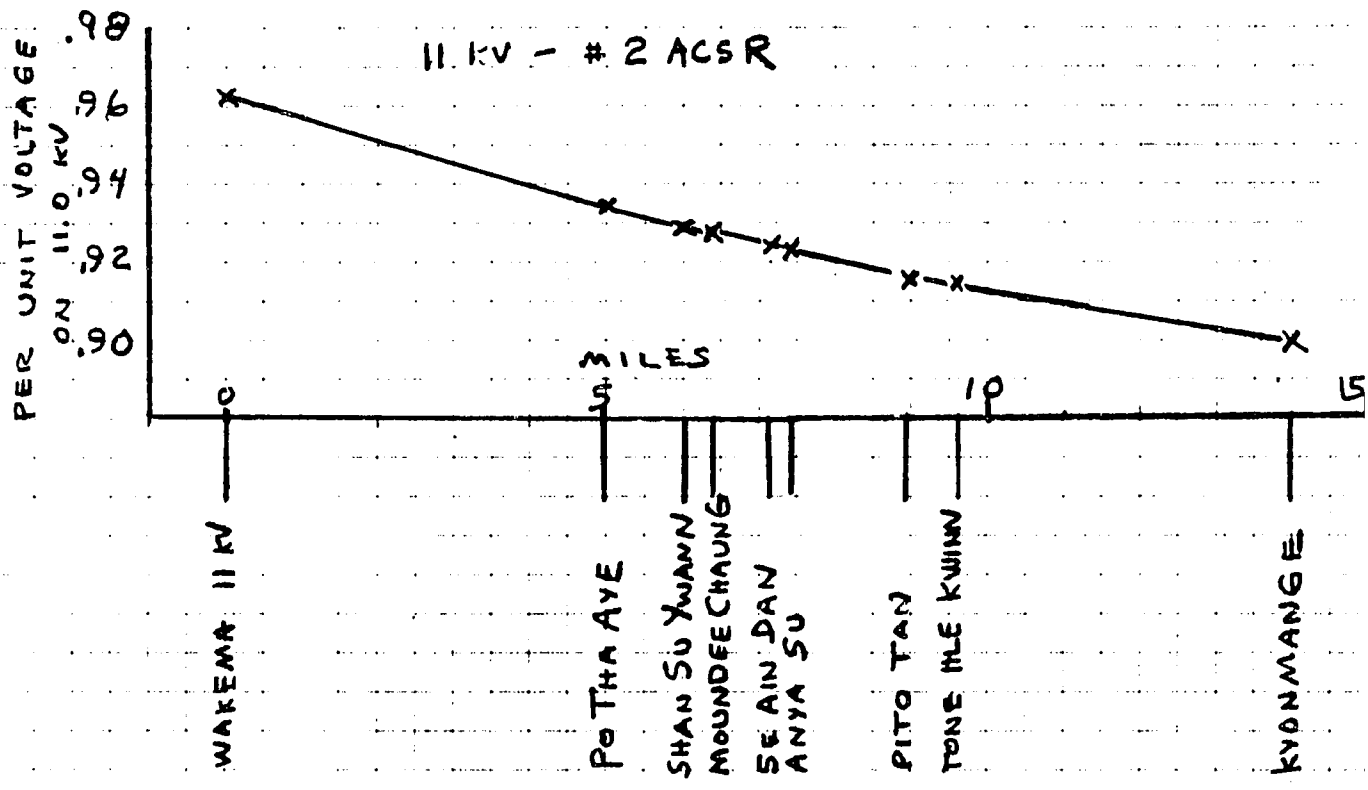

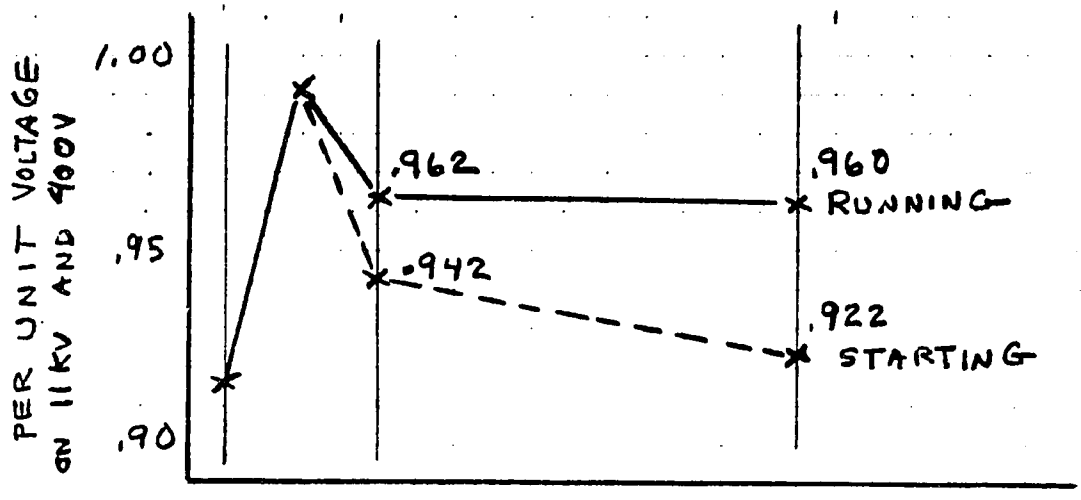

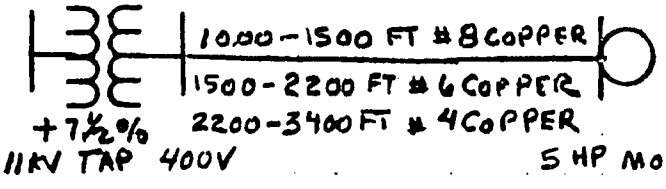

400V MOTOR FEEDER

FIGURE 6
VOLTAGE PROFILES
WAKEMA IRRIGATION PROJECT

A 5010.1B

STONE & WEBSTER ENGINEERING CORPORATION

CALCULATION SHEET

Page No. _____
Preliminary _____
Item _____

Client | Location | Est. No. | J.O. No.
Subject | Date | By
Checked | By
Based on | Revised | By

ACTIVITY	ELECTRIC LOAD KVA	MONTH											
		J	F	M	A	M	J	J	A	S	O	N	D
MONSOON CROP					←	—	—	—	—	→			
WINTER CROP		→	→	→							←	←	←
IRRIGATION	150	→	→	→								←	←
SEED PRO-CESSING AND DRYING	162			↔	↔	↔				↔	↔		
SEED STORAGE	49			←	—	—	—	—	—	→			
OFFICE AND HOUSING	61	←	—	—	—	—	—	—	—	—	—	—	→

FIGURE 7

ELECTRICAL LOAD SCHEDULE

THITCHO FARM

A 5010.1B

STONE & WEBSTER ENGINEERING CORPORATION

CALCULATION SHEET

Page No. _____
Preliminary _____
Item _____

Client _____ Location _____ Est. No. _____ J.O. No. _____

Subject _____ Date _____ By _____

Checked _____ By _____

Based on _____ Revised _____ By _____

ACTIVITY	ELECTRIC LOAD KVA	MONTH											
		J	F	M	A	M	J	J	A	S	O	N	D
MONSOON CROP					◁	═	═	═	═	═	▷		
WINTER CROP		═	═	▷						◁	═	═	═
IRRIGATION	75	→	→	→						←	←	←	←
SEED PROCESSING AND DRYING	96		↔	↔	↔					↔	↔	↔	
SEED STORAGE	44					↔	↔	↔	↔	↔			
OFFICE AND HOUSING	19	↔	↔	↔	↔	↔	↔	↔	↔	↔	↔	↔	↔

FIGURE 8

ELECTRICAL LOAD SCHEDULE

KYAUNG SU FARM

A 2010.1B

STONE & WEBSTER ENGINEERING CORPORATION

CALCULATION SHEET

Page No. _____
Preliminary _____
Item _____

Client | Location | Est. No. | J.O. No.
Subject | Date | By
Checked | By
Based on | Revised | By

ACTIVITY	ELECTRIC LOAD KVA	MONTH											
		J	F	M	A	M	J	J	A	S	O	N	D
MONSOON CROP					◁	═	═	═	═	▷			
WINTER CROP		═	═	▷					◁	═	═	═	═
IRRIGATION	37.5	→	→						←	←	←	←	←
SEED PROCESSING AND DRYING	96.			↔	↔					↔	↔	↔	
SEED STORAGE	44.				↔	↔	↔	↔	↔				
OFFICE AND HOUSING	19	↔	↔	↔	↔	↔	↔	↔	↔	↔	↔	↔	↔

FIGURE 9

ELECTRICAL LOAD SCHEDULE

SEBIN AND CHAUNG MA GYI FARMS

Appendix A

NOTES OF CONFERENCE
MAIZE & OILSEEDS PRODUCTION PROJECT
FEBRUARY 15, 1983

Present for:

Electric Power Corporation (EPC) Maize & Oil Seeds Production Project (MOPP)	U Pe Thet (S.E.) U Hea Mying (A.E.) U Mya Maung U Saing Uk U Min Thu
Stone & Webster Engineering Corporation	M.D.Robinson

The purpose of the meeting was to discuss power requirements for MOPP seed farms and the pilot irrigation project at Wakema, and to determine EPC capability to supply these electric loads. The results of the meeting are as follows:

Wakema Irrigation Project

MOPP plans to install 50-5HP portable irrigation pumps (250kVA load) in Wakema Township. The plan is to tap the existing Myaung Mya - Kyonmangay 11kV live at 7 locations and to distribute power to the pumping locations at 0.4kV.

EPC stated that the Myaung Mya - Kyonmangay line is 33kV construction presently operating at 11kV. EPC further advised that to provide adequate voltage regulation for the irrigation project, it will be necessary to increase the line voltage to 33kV between Myaung Mya and Wakema and to establish a 33/11kV substation at Wakema. EPC Standards require a minimum of 1250kVA transformer capacity for 33/11kV substations.

The existing transformer at Myaung Mya is multi-ratio so that there would be no cost in energizing the line at 33kV between Myaung Mya and Wakema. However, MOPP must provide the funds for the 33/11kV substation at Wakema, the 0.4kV distribution systems for the pumps and the 11/0.4kV substations.

Line lengths are as follows:

Myaung Mya - Wakema	18 miles
Wakema - Kyonmange	14 miles

Thitcho Seed Farm

MOPP stated that the estimated transformer size for this farm is 500kVA. The estimated total connected load is 422kVA. This connected load includes 150 kVA for pumping.

EPC advised that there will be no voltage problem at the site. MOPP must fund the cost of 9 miles of 11kV line between Natalin and the farm, as well as the 11/0.4 substation at the site.

Kyaung Su Seed Farm

MOPP stated that the estimated transformer size for this farm is 300kVA. The estimated total connected load is 234kVA. This connected load includes 75kVA for pumping.

The source of power for the 11kV lines in this area is two 1250 kVA transformers at Ziawe. Since the tap to the farm would be at the end of a relatively long 11kV feeder that has many taps, EPC would like to further investigate the feasibility of adding additional load before commenting on system requirements.

Chung Ma Gyi Seed Farm

MOPP stated that the estimated transformer size for this farm is 100kVA. The estimated total connected load is 57kVA. This connected load includes 37.5kVA for pumping.

EPC advised that the most economical way to serve this load would be to construct a 11kV line from Pyawbwe. Although there is a 33kV line on site, EPC feels that the cost of 33/0.4 transformation would exceed the cost of constructing 11kV from Pyawbwe.

MOPP would have to provide funds for the construction of 7 miles of 11kV line between Pyawbwe and the farm and the cost of constructing the 11/0.4kV substation on site.

Sebin Seed Farm

MOPP stated that the estimated transformer size for this form is 300kVA. The estimated total connected load is 200kVA. This connected load includes 37.5kVA for pumping

Following the same reasoning given for Chung Ma Gyi farm, EPC recommended extending a 11kV line from Pyawbwe.

MOPP would have to provide funds for the construction of 5 miles of 11kV line between Pyawbwe and Sebin, and the cost of constructing the 11/0.4kV substation on site.

General

EPC advised that 50,100 and 300kVA transformers are available in Burma. Depending on quantity, the esimated delivery time is 2 months.

Standard wire sizes for 11kV and 33kV lines are 35 square mm and 70 mm respectively. Wire type is ACSR.

In Burma, there is no other voltage level between 11 and 0.4kV.

EPC recommended a total of plus 7 1/2 percent no load taps on the 11kV transformer winding.

EPC requires the user to provide a primary disconnect switch and proper primary fuse for the transformer.

EPC advised that it will not be necessary for MOPP to calculate voltage drops to insure proper voltage levels provided EPC recommendations are followed.

Summary of Loads

Farm	Transformer Size (kVA)	Total Load (kVA)	Estimated Pumping Load (kVA)
1. THITCHO	500	422	150
2. KYAUNG SU	300	234	75
3. SEBIN	300	200	37.5
4. CHUNG MA GYI	100	57	37.5

1. THITCHO - 3,000 acres

Basis:	kw	pf	(kVA)
Process, Storage, etc			211
Office	18	.95	19
Housing	40	.95	42
Pumping (20)(7.5)			150

Total Connector Load = 422

2. KYAUNG SU - 800 acres

Basis:	kw	pf	(kVA)
Process, Storage, etc			140
Office	9	.95	9.5
Housing	9	.95	9.5
Pumping (10)(7.5)			75

Total Connected Load = 234

3. SEBIN - 300 acres

Basis:	kw	pf	(kVA)
Process, Storage, etc			140
Office	9	.95	9.5
Housing	9	.95	9.5
Irrigation (5)(7.5)			37.5

Total connected load = 196.5

4. CHUNG MA GYI - 300 acres

Basis:	kw	pf	(kVA)
Housing	9	.95	9.5
Office	9	.95	9.5
Irrigation (5)(7.5)			37.5

Total Connected Load = 56.5

(Date of Issue)

Specification for

SURGE ARRESTERS

1.0 SCOPE

This specification covers the technical and quality assurance requirements for furnishing and delivering surge arresters.

American National Standards

ANSI C62.1	1981 Surge Arresters for Alternating-Current Power Circuits

3.0 REQUIREMENTS

3.1 General

Quantities and types shall be as specified on the Schedule of Requirements, Attachment 1.

All arresters shall comply with the specification listed in Section 2.

3.2 Technical Data

Technical requirements for the arresters shall be as specified in Attachment 2, Technical Data.

ATTACHMENT 1

ARRESTER TECHNICAL DATA SHEETS

Description				
Item No.	____	____	____	____
Quantity	____	____	____	____
Type (station, intermediate, or distribution)	____	____	____	____
Rating, kV	____	____	____	____
Service (equipment protected)	____	____	____	____
Conditions of Service				
Site elevation, ft	____	____	____	____
Ambient temperature, °C max/min	__/__	__/__	__/__	__/__
Insulation contaminants (if special, specify type)	____	____	____	____
Special Loading Conditions				
Wind, mph	____	____	____	____
Technical Requirements				
Overvoltage reseal capability (state whether standard, or describe additional capability desired)	____	____	____	____
Conductors (Provided by the Purchaser)				
Line	____	____	____	____
Ground	____	____	____	____
Type Terminal Connectors				
Line	____	____	____	____
Ground	____	____	____	____
Porcelain glaze (chocolate brown or sky gray)	____	____	____	____

DATA BY BIDDER/SELLER

Item	____	____	____	____
Type number	____	____	____	____
Identification number	____	____	____	____
Number of units in single pole	____	____	____	____
Weight of complete pole, including accessory equip., lb	____	____	____	____
Cantilever strength at terminals, ft-lb *(including subbase)	____	____	____	____
Catalog No.	____	____	____	____
Outline dimensions, in.	____	____	____	____
Weight, lb	____	____	____	____
Minimum creepage distance over insulating members of complete pole, in.	____	____	____	____
*Front of Wave Test (Guaranteed)				
Maximum sparkover, kV crest	____	____	____	____
Rate of rise, kV per microsecond	____	____	____	____
*Inpulse Test (Guaranteed) (1.2 x 50 microsecond wave)				
Maximum sparkover, kV crest	____	____	____	____
Maximum sparkover, kV crest for:				
200 microsecond front	____	____	____	____
500 microsecond front	____	____	____	____
1,000 microsecond front	____	____	____	____
2,000 microsecond front	____	____	____	____
*Power Frequency Test (Guaranteed)				
Minimum sparkover, kV rms				
Wet	____	____	____	____
Dry	____	____	____	____

Maximum sparkover, kV rms

Wet	____	____	____	____
Dry	____	____	____	____

*Discharge Voltage Test (Guaranteed)
(8 x 20 microsecond current wave)

Maximum discharge voltage, kV crest	____	____	____	____
1,500 amp crest	____	____	____	____
3,000 amp crest	____	____	____	____
5,000 amp crest	____	____	____	____
10,000 amp crest	____	____	____	____
20,000 amp crest	____	____	____	____

*Duty Cycle Test (Guaranteed)
(10,000 amp, 8 x 20 microsecond surge superimposed on full rated power voltage for 20 operations)

Change in protective characteristics, %	____	____	____	____

*High Current - Short Duration Test (Guaranteed)
(8 x 20 microsecond current wave for 2 operations)

Minimum crest, amp	____	____	____	____
Change in protective characteristics, %	____	____	____	____

*Radio Influence Test

Test voltage, kV	____	____	____	____
Maximum RI, microvolts	____	____	____	____

Routine Factory Tests

Type Test	Item Tested (Gap, unit, pole)
_____	_____
_____	_____
_____	_____
_____	_____

*Provide results of prototype test.

(Date of Issue)

Specification for

POST APPARATUS INSULATORS

1.0 SCOPE

This specification covers the technical and quality assurance requirements for furnishing, testing, and delivering post apparatus insulators.

2.0 APPLICABLE DOCUMENTS

American National Standards

ANSI C29.9	1971	Wet Process Porcelain Insulators (Apparatus, Post Type)

3.0 REQUIREMENTS

3.1 General

Quantities, sizes, and types shall be as specified on the Schedule of Insulators, Attachment 1.

All insulators shall comply with ANSI C29.9.

All insulator units of the same position in the stack shall be interchangeable with those of other manufacturers.

Insulators shall be of standard manufacture.

All insulators shall have galvanized malleable iron or galvanized forged steel hardware.

3.2 Technical Data

Technical data for the post insulators shall be as specified in Attachment 2.

ATTACHMENT 1

SCHEDULE OF INSULATORS

	Item 1	Item 2	Item 3
Quantity of stacks			
Technical Reference No.			
Number of units per stack			
BIL of stack (impulse withstand), kv			
Bolt circle, diameter, in.:			
Top			
Bottom			
Cantilever strength, lb			
Mounting position			
Color of glaze			

ATTACHMENT 2

TECHNICAL DATA FURNISHED BY SELLER

Item	1	2	3
Mechanical values:			
Cantilever strength, lb at cap:			
Mounted upright			
Mounted underhung			
Mounted horizontal			
Tension strength, lb			
Torsional strength, in.-lb			
Compression strength, lb			
Tension-proof load, lb			
Electrical values:			
Critical flashover, kV:			
60 Hz, dry			
60 Hz, wet			
Impulse, positive			
Impulse, negative			
Withstand, kV:			
60 Hz, dry			
60 Hz, wet			
Impulse			
Radio influence data:			
60 Hz test voltage, rms to ground, kV			
Max RIV at 1,000 kHz, microvolts			

Physical data:

Catalog number of stack	_____	_____	_____
Catalog number of units:			
Top	_____	_____	_____
Intermediate	_____	_____	_____
Intermediate	_____	_____	_____
Bottom	_____	_____	_____
Creep distance of stack, in.	_____	_____	_____
Dry arc distance of stack, in.	_____	_____	_____
Weight of assembled stack, lb	_____	_____	_____
Number and size of bolts furnished per stack	_____	_____	_____
Height of stack, in.	_____	_____	_____
Drawing number	_____	_____	_____

(Date of Issue)

Specification for

HIGH-VOLTAGE DISCONNECTING SWITCHES

1.0 SCOPE

This specification details the technical and quality assurance requirements for furnishing, testing, and delivering outdoor type high-voltage disconnecting switches.

Installation of the switches will be by others.

2.0 APPLICABLE DOCUMENTS

American National Standards

ANSI C29.8	1980	Wet-Process Porcelain Insulators (Apparatus, Cap, and Pin Type)
ANSI C29.9	1971	Wet-Process Porcelain Insulators (Apparatus, Post Type)
ANSI C37.30	1971	Definitions and Requirements for High-Voltage Air Switches, Insulators, and Bus Supports
ANSI C37.32	1972	Schedules of Preferred Ratings, Manufacturing Specifications, and Application Guide for High-Voltage Air Switches, Bus Supports, and Switch Accessories
ANSI C37.33	1970	Rated Control Voltages and Their Ranges for High-Voltage Air Switches
ANSI C37.34	1971	Test Code for High-Voltage Air Switches
ANSI C37.34a	1975	Supplement to ANSI C37.34

American Society for Testing and Materials

ASTM A123	1978	Zinc Hot-Galvanized Coatings on Products Fabricated From Rolled, Pressed, and Forged Steel Shapes, Plates, Bars, and Strip

3.0 REQUIREMENTS

3.1 Rating and Quantity

Rating and quantity shall be as specified in Attachment 1, Schedule of Requirements.

3.2 Technical Data

Technical data for the disconnecting switches shall be as specified in Attachment 2.

3.3 Description

3.3.1 Main Switches

The disconnecting switches shall be 3-pole, group-operated, single throw, for service outdoors on a 3 phase, 50 Hz system. The switches shall be designed and fabricated in accordance with the applicable standards listed in Section 2.0.

All disconnecting switches shall be designed to effect normal opening or closing under all loading conditions specified.

All three poles of each switch shall be designed to operate as a unit so that all contacts will open and close at the same time. Switches shall be arranged so that no relative movement of one pole with respect to the others, or misalignment of contacts will result from any number of opening and closing operations.

All contacts shall be of the high pressure type and shall be designed to have a wiping and cleaning movement when moved to open and closed positions. Design shall also provide for accurate positioning of switch blade tips in the jaw contacts.

All current carrying connections shall be rigid or sliding, pressure type. Braided or otherwise flexible type connections shall not be used.

Each single pole unit shall be provided with positive, adjustable devices to limit blade movement to that necessary for the complete operating cycle.

Design and construction of all energized parts of disconnecting switches shall be effective in limiting corona and radio influence voltage.

Insulator subbases shall be designed to permit convenient inspection of hold-down bolts.

An aluminum or structural steel base, as specified, shall be furnished for each pole of each disconnecting switch. The strength of the base shall be adequate to support the disconnecting switch rigidly so as to prevent misalignment without dependence upon Purchaser's structure.

Disconnecting switches shall be furnished for mounting as indicated in Schedule of Requirements, and bases shall include all necessary details and attachments required for installation on structural supports furnished by others.

3.3.2 Operating Mechanisms

All operating mechanisms shall be furnished with greaseless, noncorrosive, ball or roller type main bearings. A braidless grounding device shall be provided on the torsional operating rod, located above the operating crank or motor operator. The grounding device shall be capable of carrying the same short time and momentary currents as the disconnecting switches.

All operating mechanisms and linkages shall be designed so that all switch blades will be in the completely closed or completely opened positions when the operating crank or motor is in the full rotated position. Operating mechanisms shall be complete with all bearings, interpole, outboard and vertical operating shafts, offset mechanisms, bell cranks, reduction gears, and fittings required for proper operation.

All interphase control pipes and connecting links between switch crank arm and the group operated switch shall be equipped with threaded clevis fittings. The minimum elevation of horizontal interphase operating linkages shall be 12 in below the aluminum or structural steel base.

All structural members required for attaching the operating mechanism to the disconnecting switch supporting columns shall be included.

Operating mechanisms shall be designed to permit padlocking in either fully open or fully closed position.

All manual operating mechanisms shall be designed so that the disconnecting switch is opened when the operating hand crank is rotated in the clockwise direction. The maximum force required to open or close the disconnecting switches shall be well within the physical capacity of an average man. Location of each switch handle will be specified later.

3.3.3 Grounding Switches

Grounding switches shall be furnished with disconnecting switches as required in accordance with the Schedule of Requirements. Grounding switches shall be 3-pole, group operated, installed at either the hinge end or jaw end, or on both ends as specified in the Schedule of Requirements. Drilling shall be provided on all disconnecting switches to

permit future installation of grounding switches at either the hinge or jaw end. Grounding blades when open shall be at an angle of approximately 90 deg with the longest dimension of the base of each phase.

All grounding switches and connections shall be nonferrous material and shall be capable of carrying the same short time and momentary currents as the disconnecting switches. A bar shall be furnished, drilled, and fitted for connecting each ground terminal of the grounding switch to its associated base.

An independent manual operating mechanism shall be provided for each grounding switch.

3.5 Welding

All welding shall be in accordance with the Seller's standard welding procedures. As a minimum, all production fillet and butt welds shall satisfy the following visual acceptance criteria:

1. No cracks or lack of fusion shall be acceptable.

2. The sum of weld porosity diameters shall not exceed 3/8 in in any linear in of weld and shall not exceed 3/4 in in any 12 in length of weld.

3. All weld craters shall be filled to the full cross-section of the weld.

4. Undercut shall not exceed 1/32 in. The Seller shall establish a lesser value of undercut if required to satisfy his design requirements.

5. Weld filler material reinforcement shall be 0 in to 1/8 in maximum between abutting surfaces and shall have a gradual transition (304

All materials provided by the Seller, requiring field welding, shall be identified by specification, type, and grade.

3.6 Spare Parts

All spare parts for equipment covered by this specification shall comply in all respects with the requirements of this specification.

ATTACHMENT 1

SCHEDULE OF REQUIREMENTS

Item No.	_____	_____	_____
Type	_____	_____	_____
Quantity	_____	_____	_____
Rated voltage, kV	_____	_____	_____
Maximum design voltage, kV			
BIL, kV	_____	_____	_____
Continuous current, amp, at 30 C rise	_____	_____	_____
Momentary current, KA	_____	_____	_____
3 sec current, KA	_____	_____	_____
Mounting	_____	_____	_____
Insulators			
Type	_____	_____	_____
Cantilever strength, lb	_____	_____	_____
Rating, BIL	_____	_____	_____
Color	_____	_____	_____
Live parts (copper or aluminum)	_____	_____	_____
Type of base, (steel or aluminum)	_____	_____	_____
Approximate length of vertical operating rod, ft	_____	_____	_____
Approximate distance, center phase to vertical operating rod, ft	_____	_____	_____
Center-to-center distance between phases, ft-in	_____	_____	_____

SCHEDULE OF REQUIREMENTS (CONT'D)

Line Terminals			
Type	_____	_____	_____
Bus Size	_____	_____	_____
Material	_____	_____	_____
Arcing horns	_____	_____	_____
Outriggers	_____	_____	_____
Site and Physical Data			
Elevation of site, ft	_____	_____	_____
Temperature			
Maximum, C	_____	_____	_____
*Minimum, C	_____	_____	_____
**Minimum, C	_____	_____	_____

*For a period of at least 6 hr
**For a period of at least 1 hr

Loading Conditions			
Wind, mph	_____	_____	_____
Grounding Switch			
Number required	_____	_____	_____
Location (hinge or jaw end)	_____	_____	_____
Type interlocks	_____	_____	_____

ATTACHMENT 2

TECHNICAL DATA

Item No.	_____	_____	_____	
Switch manufacturer	_____	_____	_____	
Manufacturer's type No.	_____	_____	_____	
Insulator manufacturer	_____	_____	_____	
Insulator Catalog Nos.	_____	_____	_____	
Number of insulators per stack	_____	_____	_____	
Guaranteed Assembled Switch Performance				
Continuous current-carrying capacity, amp	_____	_____	_____	
Momentary current-carrying capacity, amp	_____	_____	_____	
3 sec current-carrying capacity, amp	_____	_____	_____	
60 Hz Withstand				
Dry, 1 min, kV	_____	_____	_____	
Wet, 10 sec, kV	_____	_____	_____	
Impulse Withstand				
2 x 50 microsecond, kV	_____	_____	_____	
Allowable downward force at tip of terminal pad, lb	_____	_____	_____	
Allowable cantilever strength at centerline of switch blade and at terminal pad, lb	_____	_____	_____	
Dimensions, Weights, and Physical Data				
Minimum Clearance				
Live parts to ground, in	_____	_____	_____	

TECHNICAL DATA (CONT'D)

Phase-to-phase, in	_____	_____	_____	2.12
Across open switch gap, in	_____	_____	_____	2.15 2.16
Net weight per pole unit, insulators included	_____	_____	_____	2.19 2.20
Shipping Weight				2.23
Largest piece, lb	_____	_____	_____	2.25
One complete switch	_____	_____	_____	2.26
Type of switch bearings	_____	_____	_____	2.29
Type of switch contacts and material	_____	_____	_____	2.32 2.33

(Date of Issue)

Specification for

ALUMINUM CONDUCTOR, STEEL REINFORCED
ACSR

48

1.0 SCOPE

This specification covers the technical and quality assurance requirements for furnishing, testing, and delivering bare, Class AA, aluminum conductor, steel reinforced (ACSR).

2.0 APPLICABLE DOCUMENTS

American Society for Testing and Materials

ASTM B232	1974	Aluminum Conductors, Concentric-Lay-Stranded Coated-Steel Reinforced, (ACSR)
ASTM B500	1972	Zinc-Coated (Galvanized) and Aluminum-Coated (Aluminized) Stranded Steel Core for Aluminum Conductors, Steel Reinforced (ACSR)

3.0 REQUIREMENTS

Quantity and type shall be as specified in the attached Schedule of Requirements, Attachment 1. The ACSR shall comply with the standards listed in Section 2.0.

The surface of the finished conductor shall be smooth and without points, sharp edges, abrasions, or any nonuniformities. The conductor shall be free of excessive die grease, metal particles, and dirt, and cleaning procedures shall be used, if required, to provide a smooth, clean surface.

ATTACHMENT 1

SCHEDULE OF REQUIREMENTS

Item No.	_____	_____
Quantity, ft	_____	_____
Cross section, kcmil	_____	_____
No. of wires, aluminum/steel	_____	_____
Size of wires, aluminum/steel	_____	_____
Type of steel core wire	_____	_____
Type of reel	_____	_____
No. of reels	_____	_____
Length of cable per reel	_____	_____

ATTACHMENT 2

TECHNICAL DATA

Conductor

Item No.	_____	_____
Area, kcmil	_____	_____
Dia, in, with tension of 20 percent of breaking strength	_____	_____
Weight, lb per 1,000 ft	_____	_____
Number of strands:		
EC aluminum	_____	_____
Steel	_____	_____
Rated breaking strength, lb	_____	_____
Modulus of elasticity:		
Initial, psi	_____	_____
Final, psi	_____	_____
Alternating current resistance ohm/mile at 25°C	_____	_____
Conductivity, percent IACS minimum:		
EC aluminum	_____	_____
Coefficient of linear expansion per °F	_____	_____
Temperature coefficient of resistance per °C, at 25°C:		
EC aluminum	_____	_____
Strand wire:		
Dia, in.	_____	_____
Area, kcmil	_____	_____
Area, sq in.	_____	_____
Tensile strength, minimum individual tests, psi	_____	_____

Average for lot, psi	_____	_____
Minimum elongation, percent in 10 in.	_____	_____
Core wire:		
Dia, in.	_____	_____
Stress at one percent extension minimum, psi	_____	_____
Ultimate tensile strength minimum,psi	_____	_____
Ultimate elongation, minimum percent in 10 in.	_____	_____
Reel		
Type	_____	_____
Overall dia, in.	_____	_____
Drum dia, in.	_____	_____
Inside width, in.	_____	_____
Overall width, in.	_____	_____
Hub:		
Dia, in.	_____	_____
Length inside, in.	_____	_____
Maximum cable length for full reel, ft	_____	_____
Reel weight, lb:		
Empty	_____	_____
Shipping, full reel	_____	_____

Specification for: 1.6

EMERGENCY DIESEL GENERATORS 1.8

CONTENTS

		Page No.
1.0	SCOPE	1-1
2.0	APPLICABLE DOCUMENTS	2-1
3.0	REQUIREMENTS	3-1
3.1	Project Type, Location, and Site Conditions	3-1
3.2	Extent of the Work	3-1
3.2.1	Responsibility	3-2
3.3	Basis of Design	3-2
3.3.1	Conditions of Service	3-2
3.3.2	Performance Required	3-3
3.3.3	Materials	3-4
3.4	Diesel Engine	3-4
3.4.1	Engine Starting System	3-5
3.4.2	Engine Fuel System	3-6
3.4.3	Engine Cooling System	3-6
3.4.4	Engine Lubrication System	3-7
3.4.5	Engine Air Intake System	3-8
3.4.6	Engine Exhaust System	3-8
3.4.7	Engine Speed and Load Control System	3-8
3.4.8	Engine Protection System	3-8
3.5	Generator	3-9
3.6	Auxiliary Motors	3-10
3.6.1	Accessories	3-11
3.7	Excitation System	3-12
3.8	Generator and Excitation Protection Systems	3-12
3.9	Control Equipment	3-12
3.9.1	Engine Instrument Panel	3-12
3.9.2	Engine and Generator Control Panel	3-13
3.9.3	Remote Breakglass Emergency Shutdown Switch	3-13
3.10	Generator Circuit Breaker	3-13
3.11	Generator Set Mounting	3-18
3.12	Welding	3-19
3.13	Vibration and Balance	3-20
3.14	Shop Cleaning	3-20
3.15	Surface Preparation and Painting	3-20
3.16	Technical Data by Seller	3-21
3.16.1	Diesel Engine	3-23
3.16.2	Engine Starting System	3-24
3.16.3	Engine Fuel System	3-24
3.16.4	Engine Lubrication System	3-24
3.16.5	Engine Cooling Water System	3-25
3.16.6	Engine Protection System	3-25
3.16.7	Speed Control System	3-25
3.16.8	Generator	3-25
3.16.9	Generator and Excitation Protection System	3-27
3.16.10	Generator Circuit Breaker	3-28

CONTENTS (CONT'D)

		Page No.	
3.16.11	Auxiliary Electric Motors,	3-29	2.13
3.16.12	Vibration Isolators	3-30	2.14
	Attachment No. 1, Diesel Generator		2.16
	No. 1 Loading Summary	A1-1	2.17
	Attachment No. 2, Diesel Generator		2.18
	No. 2 Loading Summary	A1-2	2.19

1.0 SCOPE

The Seller shall design, engineer, furnish, and deliver ___ diesel engine generator sets with all necessary accessories and auxiliary equipment for use on the services as hereinafter described. The Seller shall also (1) conduct a program of his standard factory tests to verify system performance in accordance with this specification; and (2) provide erection and commissioning advisers and testing personnel to ensure operation of the diesel generator sets as specified herein. References to "the diesel generator unit" in this specification, although singular, are understood to be plural in intent. Such references shall be understood to mean "each diesel generator unit."

2.0 APPLICABLE DOCUMENTS 1.9

American National Standards Institute 1.12

ANSI/AFBMA-9	1978	Load Ratings and Fatigue Life for Ball Bearings	1.15 1.16
ANSI/AFBMA-11	1978	Load Ratings and Fatigue Life for Roller Bearings Power Piping Code	1.20 1.21 1.22
ANSI B31.1	1980	Power Piping Code	1.25
ANSI C37.20	1974	Switchgear Assemblies, Including Metal Enclosed Bus with Supplement C37.20A	1.28 1.29 1.30
ANSI C50.10	1977	General Requirements for Synchronous Machines	1.34 1.35
ANSI C50.12	1965	Requirements for Salient Pole Synchronous Generation and Condensers	1.39 1.40 1.41
ANSI C57.13	1977	Requirements, Terminology, and Test Code for Instrument Transformers	1.45 1.46 1.47

Institute of Electrical and Electronic Engineers 1.52

IEEE 112	1978	Standard Test Procedure for Polyphase Induction Motors and Generators	1.55 1.56 1.57
IEEE Std 115	1965	Test Procedure for Synchronous Machines	2.2 2.3

National Electrical Manufacturers Association 2.8

NEMA CC1	1981	Electric Power Connectors for Substations	2.11 2.12
NEMA MG1	1978	NEMA Standards for Motors and Generators	2.16 2.17
NEMA ICS-1	1978	Industrial Controls and Systems	2.20
NEMA ICS-2	1978	Industrial Control Devices, Controllers, and Assemblies	2.23 2.24
NEMA ICS-6	1978	Enclosures for Industrial Controls and Systems	2.27 2.28

	National Fire Protection Association		2.32
NFPA 30	1981	Flammable and Combustible Liquids Code	2.35 2.36
NFPA 37	1979	Standard for the Installation and Use of Stationary Combustion Engines and Gas Turbines	2.39 2.40 2.41
NFPA 70	1981	National Electrical Code	2.43
	Underwriters' Laboratories		2.47
UL 80	1980	Steel Inside Tanks for Burner Fuel	2.50 2.51
UL 1008	1977	Automatic Transfer Switches	2.54

3.0 REQUIREMENTS

3.1 Project Type, Location, and Site Conditions

3.2 Extent of the Work

The equipment to be furnished under this speci consist of ___ diesel driven alternating-curr generating units. Each system shall include a embodying the engine, generator, and basic accessor a rigid common sub-base, as well as control panels, accessories, all comprising a complete package. completely assembled, piped, wired, and tested system at the factory. The factory testing shall c Seller's standard program of tests as required by N

The following attachments are included at the section:

Attachments	Title
Attachment 1	Diesel Generator Summary
Attachment 2	Diesel Generator Summary

3.2.1 Responsibility

The diesel generator unit shall be the standard pro regularly engaged in the manufacture of generatin Seller shall be either the generator or engine m their authorized distributor. The products of eng set assemblers other than generator or engine ma their authorized distributors will not be acceptabl generator units shall be factory assembled and supplier's manufacturing facility. To be clas manufacturer, the builder of the generating set mu at least the engine or the generator. The purpose is to establish one responsibility for the succes of the emergency generator unit, and to utilize pr packaged units.

The manufacturer shall have printed literature describing the standard diesel generator set propos

3.3 Basis of Design

3.3.1 Conditions of Service

The diesel generator unit will be required to operate in case of complete loss of utility power, to supply power to essential equipment until normal power is returned. It will also be periodically started and test run to maintain the unit in good operating condition.

The equipment will be used on a _____ ac 3 phase, __ Hz, __ wire, power system.

The diesel generator unit shall be capable of starting cold, in a minimum room ambient of __°F, accelerating to rated speed and full voltage and ready to accept load to its rated capacity in not more than __ sec from system start signal, and be capable of carrying continuously rated load, in a maximum room ambient of ___°F. The diesel generator unit shall be capable of carrying rated load with the outside combustion and cooling air temperature ranging from -___°F to ___°F with a maximum relative humidity of __ percent. The electrical components and transfer switches shall be capable of functioning properly when exposed to diesel generator room ambient conditions with such cooling air conditions.

3.3.2 Performance Required

Each diesel generator set shall be rated continuous standby (defined as continuous for the duration of any power outage), ___ ac, 3 phase, __ wire, __ power factor, minimum ___ kW/___ kVA at the environmental conditions stated herein.

The diesel generator shall be capable of being sequentially loaded in accordance with the requirements delineated in the loading sequence table included at the end of this section.

When loaded sequentially in accordance with the loading summary, the transient voltage drop at any sequence step shall be limited such that the generator voltage is not less than 80 percent of nominal voltage, and frequency is not less than 95 percent of nominal. In addition, the voltage at the generator shall recover to within 90 percent of nominal voltage and the frequency to within 98 percent of nominal within 2 sec after each sequential load application.

During recovery from transients caused by step load increases, or resulting from 100 percent load rejection, the speed of the diesel generator set shall not reach the overspeed shutdown setpoint.

3.3.3 Materials

Products which contain asbestos are prohibited. This prohibition includes items such as packings or gaskets even though an item may be encapsulated or the asbestos fibers may be impregnated with binder material.

Asbestos products are acceptable only in exceptional cases where the Seller states in writing that no suitable substitute material exists, and, in addition, the Seller furnishes to the Engineers a copy of U.S. Department of Labor Occupational Safety and Health Administration "Material Safety Data Sheet" (Form OSHA 20) completed by the asbestos product manufacturer.

All asbestos products and their containers except for bonded asbestos products shall be labeled to indicate that they contain unbonded asbestos.

3.4 Diesel Engine

The diesel engine shall be multicylinder, full diesel, turbocharged, vee or inline, stationary type, having removable cylinder liners with a direct injection fuel system, liquid cooled with a unit mounted radiator, fan, and cooling pump, and positive crankcase ventilation.

The engine shall have a continuous horsepower rating when equipped with all engine accessories, including radiator fans, to provide rated diesel generator output at rated speed and frequency.

The crankshaft shall be fully counterbalanced. Bearings shall be the precision insertion type, readily replaceable without machining or scraping.

Bearings shall be suitable for continuous service. The life of the antifriction bearing shall be the L10 Service Life calculated in accordance with ANSI/AFBMA-9 and ANSI/AFBMA-11 for the design speed and load condition.

The diesel engine generator unit shall be completely equipped with all necessary auxiliary systems as hereinafter specified to form a complete package. Industrial control devices, controllers, and assemblies shall be in accordance with NEMA ICS-1, ICS-2, and ICS-6. All control relays shall be provided with dust-tight covers.

Harmful torsional vibration stresses shall not occur within a range of 10 percent above to 10 percent below rated synchronous speed.

Moving parts shall be designed to withstand without damage, overspeed caused by full extended load rejection, with ample margin to allow the overspeed trip devices to be set sufficiently high to guarantee that the engine-generators will not trip on full extended load rejection.

Exposed rotating parts, such as couplings, bolts, or pulleys, shall be adequately protected by removable metal guards.

3.4.1 Engine Starting System

The diesel engine shall be provided with a dc motor-driven starting system which shall be capable of starting the engine without outside power. The starting system shall include two heavy-duty electric motor-driven cranking mechanisms with overcranking protection, starting battery, battery rack, battery cables, voltage regulator, starting battery dual rate float/equalize charger, and complete instrumentation and control systems.

A nickel-cadmium grid type storage battery, 12 V or 24 V together with rack and connections, shall be furnished and will be located by the Purchaser adjacent to the diesel generator unit. The battery shall have sufficient capacity to crank the engine five times at a temperature of __°F without lowering the terminal voltage of the individual cells below 1.6 V. Each start attempt shall consist of a maximum of 8 sec of continuous cranking. A high-grade hydrometer shall be included. The battery shall be adequately sealed to prevent the emission of acid fumes and be equipped with explosion resistant vent caps.

A static type dual rate float/equalize charger with automatic and manual charge control shall be furnished to service and float the battery and maintain it fully charged from the Purchaser's ___ V, single phase, __ Hz, alternating current power supply when the unit is stopped. The charger shall operate satisfactorily at an ambient temperature of __°F and shall be provided with protective fuses, rheostat, and ammeter. The charger shall be by LaMarche or approved equal.

3.4.2 Engine Fuel System

An independent fuel oil day tank, having a minimum capacity of 2 hr full load operation, shall be provided by the Seller for each unit. Means shall be provided for priming the entire system. The tank shall be provided with automatic high and low level float switches for control of the Purchaser's transfer pump motor. Separate alarm contacts for indicating extreme low fuel oil level shall be supplied. The Seller shall furnish all piping between the fuel oil day tank and the engine. Piping shall be in accordance with ANSI B31.1.

The Purchaser will furnish a fuel storage tank. The tank will be located indoors remote from the engine-generator set. The Purchaser's fuel oil pump will transfer oil from this tank to the day tank. The Purchaser will provide all piping between the fuel oil storage tank and the day tank.

Day tank construction shall conform to the latest edition of NFPA 37 and UL 80.

The fuel system shall be equipped with a fuel filter having replaceable elements which may be easily removed from their housings for replacing without breaking any fuel line connection, or disturbing the fuel pumps or any other part of the engine. Fuel filters shall be conveniently located in one accessible housing, ahead of the injection pumps so that the fuel will have been thoroughly filtered before it reaches the pumps.

The fuel system shall be furnished with an electric motor-driven or engine-driven auxiliary start-up fuel pump, if required, for 7 second starting.

The engine shall be equipped with a built-in gear type, engine-driven fuel pump for supplying fuel through the filters to the injection pumps at constant pressure. A pressure switch shall shut down the auxiliary fuel pump when normal operation is attained.

The engine shall be suitable for using commercial grade CS12-48 No. 2 oil.

3.4.3 Engine Cooling System

The diesel engine shall be water-cooled, glycol antifreeze protected and the cooling system shall consist of a direct, engine-driven water circulating pump, water temperature regulating valves, unit mounted radiator with blower fan, radiator air discharge duct adapter, and necessary pipe fittings and lagging.

The engine cooling water system shall be completely self-contained and closed-loop, in that only the engine cooling water shall be used for cooling the various engine components.

The engine-driven water circulating pump and cooling system shall be of adequate capacity to limit the temperature rise of the water through the engine to the engine manufacturer's specified limits when the diesel generator set is delivering full rated load at the ambient conditions stated herein.

Temperature-regulating valves shall maintain the engine cooling water at a uniform temperature, and shall be of adequate size and capacity to perform their intended function.

The unit-mounted radiator shall be suitable for maintaining the engine cooling water within the required temperature limits. It shall be vertically mounted and the air shall be propelled through it by a fan. Regulating valves shall be provided, as required, to maintain the engine cooling water at a uniform temperature. The maximum and minimum outdoor temperatures are ___°F, and ___°F, respectively.

The water supplied to the engine cooling water system will be potable water from the building's domesic water system.

A rigid guard shall enclose both top and sides of all moving parts between the engine and the radiator.

3.4.4 Engine Lubrication System

The engine lubrication system shall be integral with the engine and be positive in action. It shall include a direct engine-driven gear type lubricating oil pump, lubricating oil filters, all piping, valves, and control devices to form a complete lubrication system.

The engine-driven lubricating oil pump shall have sufficient capacity to ensure adequate lubrication of main bearings, crank pins, camshaft bearings, valve gear, rocker arms, piston cooling, and all other vital wearing parts.

Lubricating oil filters shall be of the multiple element, continuous full flow type, utilizing suitable filtering media.

3.4.5 Engine Air Intake System

The diesel engine shall be provided with one or more dry type, replaceable element, air cleaners.

3.4.6 Engine Exhaust System

The exhaust system for each diesel engine shall consist of a continuous flexible high temperature stainless steel exhaust connector with flanged connections at both ends, and a muffler with flanged connections, tapped for drainage. The muffler shall be suitable for critical type silencing and shall be Maxim M51 with bottom inlet or approved equal.

3.4.7 Engine Speed and Load Control System

The engine speed and load control system for the engine-generator set shall consist of a suitable electric/isochronous governor, complete with droop adjustment and all necessary equipment, for controlling the engine speed. A plexiglass governor assembly cover to allow visual inspection of the dial settings, with padlocking provision shall be provided.

A separate overspeed device, independent of the governor, shall be provided to prevent engine runaway in the event of any failure which may render the governor inoperable.

3.4.8 Engine Protection System

The diesel engine shall be provided with a system of automatic controls designed to initiate engine alarm and shutdown sequences to prevent damage or destruction of the engine should a malfunction occur during operation. The controls shall be of a positive-action type and shall contain electrical contacts to be used for energizing the alarm, trip, and shutdown devices. The pressure and temperature alarm controls shall be set to operate before the shutdown controls to provide warning of impending shutdown. The engine protection systems shall be integrated with the alarm, trip, and shutdown control systems described under "Generator and Excitation Protection Systems Section 3.8."

Automatic engine shutdown shall be initiated by any one of the following conditions:

1. High engine cooling water temperature

2. Low lubricating oil pressure

3. Engine overspeed, as stated below

4. High lubricating oil temperature

5 Engine overcrank

Automatic shutdown of the engine shall be initiated by unit overspeed. The overspeed control shall operate from a rotating part of the engine and shall be activated by centrifugal force when the engine speed exceeds a safe operating speed, as determined by the engine manufacturer. Devices as required shall also be provided to initiate an electrical trip of the emergency generator on overspeed.

The bidder shall state any additional alarm and shutdown devices he considers necessary and proposes to furnish for the safe operation and protection of the unit.

3.5 Generator

The generator shall be designed, manufactured and tested in accordance with NEMA MG1, and ANSI C50.10.

The generator shall be mounted on the common subbase with its respective engine driver and shall be directly connected to the engine by means of a suitable coupling. It shall be self-ventilated, dripproof construction.

The generator shall have a continuous standby rating at rated speed, ___ pf lagging ___ V, 3 phase, __ Hz. It shall be Wye connected and shall be capable of satisfactorily meeting the starting, loading, and voltage drop requirements as delineated in Section 3.3.2, "Performance Required" without exceeding temperature rises specified by NEMA MG1 for a continuous standby rated generator. The minimum rating of the generator shall be ___ kW.

Both ends of each phase of the stator windings shall be brought out through suitably rated copper bus terminal box, providing adequate space for connection of the Purchaser's cables at bottom of the generator. The Purchaser's cables will enter the ___ of the terminal box. Compression-type terminal connections will be provided by the Purchaser. Seller's generator terminals shall be copper with NEMA standard two-hole drilling.

The insulation for the stator windings, the rotor windings, and for the exciter windings shall be Class F, Class F, and Class B, respectively, as defined in ANSI Standard C50.10. Temperature rise shall be limited to achieve a design life of 20 years.

Insulation shall be treated with a sealing agent to provide protection against severe moisture, oil, chemicals, and abrasive dust. The bidder shall provide a description of the stator winding insulation system.

The generator and its output terminals shall be properly designated to identify the phase rotation sequence.

The generator short-circuit capability, wave shape, telephone influence factor, and overspeed requirements shall meet those delineated in ANSI Standards C50.10 and MG-1.

The stator frame shall be provided with two unpainted copper ground pads, diametrically opposite in location, for the Purchaser's ground connections. Each pad shall be drilled and tapped for a standard NEMA-2 hole connection in accordance with NEMA CC1-4.05.

Generator bearings shall be suitably insulated, where necessary, to prevent the flow of shaft currents.

Damper windings shall be provided for unbalanced loading conditions.

The generator rotor shall be constructed so that it will withstand, without mechanical injury, an overspeed condition of 25 percent above synchronous speed.

3.6 Auxiliary Motors

Motors shall be manufactured by General Electric, Reliance, Siemens Allis, or Westinghouse with exception of governor motor.

All motors shall conform to NEMA MG1 requirements for fractional or integral horsepower motors with respect to materials, workmanship, design, and tests except as specified herein.

Alternating current motors rated 1/2 hp and above shall be ___ V, 3 phase, __ Hz.

Alternating current motors rated less than 1/2 hp shall be ___ V, 1 phase, __ Hz.

Motor insulation shall be nonhygroscopic and suitable for the service conditions specified herein.

Alternating current motors shall be designed for across-the-line starting and shall be capable of accelerating the connected load with a constant 80 percent of rated voltage at the motor terminals.

Direct current motors shall be suitable for use on the Seller's battery.

Motors shall be NEMA Design B unless load torques require motors with special characteristics.

The full load current when operating at +10 percent of rated voltage shall not exceed 1.15 times rated full load current.

Motor safe locked rotor time at rated locked rotor current shall be equal to, or greater than, the maximum accelerating time at minimum specified starting voltage.

Motors shall be selected to permit the connected load to develop its specified output continuously without encroaching on the service factor under normal operating conditions.

Motors shall be capable of withstanding a full voltage bus transfer from one source to another within a transfer time accomplished by the Seller's automatic transfer switches.

Totally enclosed motors up to 15 hp shall have at least one drain hole with a piping plug at each end.

Motors shall have antifriction bearings with suitable seals to prevent leakage of lubricant in either direction along the shaft.

Grease-lubricated bearings shall be lubricated prior to shipment.

Bearings requiring periodic regreasing shall have provisions for inservice positive lubrication with means to prevent damage due to overgreasing.

Bearings of the completely sealed or the prelubricated type shall not have provisions for inservice lubrication.

The life for antifriction bearings is the L-10 service life calculated in accordance with ANSI/AFBMA-9 and ANSI/AFBMA-11 for the design speed and connected load conditions.

3.6.1 Accessories

For motors with frame sizes larger than 256 T, terminal leads 6 in longer than standard shall be provided.

Where leads are copper straps they shall be drilled for NEMA standard 2-hole lugs.

Motor terminal housings shall be sized, as a minimum, in accordance with the National Electrical Code, NFPA-70, paragraph 430-12.

Main terminal box shall be capable of rotation in 90 deg steps.

Motors with frame sizes larger than 184 T shall be provided with a suitable grounding pad with tapped holes, matching bolts, and copper cable lugs.

3.7 Excitation System

The generator shall be equipped with a fast response, continuously acting excitation system, consisting of a brushless rotary type main exciter, and a static voltage regulator. The exciter shall be capable of remote control to raise and lower the voltage. The exciter shall be capable of providing sustained fault current in excess of rated output current for selective tripping of downstream molded case circuit breakers.

The excitation system shall have the capability of minimizing voltage disturbances and maintaining the generator output voltage within acceptable limits during the starting and acceleration of induction motors as described in the starting, loading, and voltage drop requirements delineated in Section 3.3.2. The voltage regulator shall be high speed, continuously acting, and shall be suitable for maintaining normal operating voltage within ±0.5 percent.

3.8 Generator and Excitation Protection Systems

The generator and its respective excitation system shall be provided with a system of automatic controls designed to initiate

generator alarm and trip sequences to prevent damage or destruction of the generator should a malfunction occur during operation. The controls shall be of a positive-action type and shall contain electrical contacts to be used for energizing the alarm, trip, and shutdown devices. The generator and excitation protection systems shall be integrated with the alarm, trip, and shutdown system described under "Engine Protection Systems" Section 3.4.8. Means shall be provided by the Seller for shorting or deenergizing the generator field upon engine shutdown.

Automatic generator trip shall be initiated by the following condition:

Engine overspeed

The bidder shall state any additional alarm and trip devices he considers necessary, and proposes to furnish, for the safe operation and protection of the generators and excitation systems.

3.9 Control Equipment

3.9.1 Engine Instrument Panel

An engine or generator mounted instrument panel, mounted on vibration isolators, shall contain the following gages for proper engine surveillance and monitoring:

Engine Cooling Water Temperature
Engine Lube Oil Pressure
Engine Lube Oil Temperature
Engine Running Hourmeter
Battery Charging Ammeter

Engine Alarm Indicators for Low Oil Pressure, High Water Temperature, and Engine Overspeed; with lamp test switch, alarm horn, and acknowledge switch.

3.9.2 Engine and Generator Control Panel

The engine and generator control panel shall be mounted on or near the generator terminal box, on vibration isolators, in a NEMA 1 enclosure. The panel shall contain a voltmeter, voltmeter selector switch, ammeter, ammeter selector switch, frequency meter, watt meter, run-stop-automatic control switch, voltage adjusting rheostat, manual reset, and fine speed control potentiometer.

The control panel shall also include indicating lights to signal:

Switch "off" (flashing red)
Overcrank (red)
Emergency stop (red)
Anticipatory high cooling water temperature (yellow)
Anticipatory low oil pressure (yellow)
Low cooling water temperature (red)
High battery voltage (red)
Low battery voltage (red)
Low fuel level in day tank (red)
System ready (green)

3.9.3 Remote Breakglass Emergency Shutdown Switch

A remote shutdown station shall be furnished. The station shall be in a NEMA 1 enclosure and shall have padlocking provisions.

3.10 Generator Circuit Breaker

A main generator output line molded case 3 pole ___ ampere (minimum) circuit breaker shall be unit-mounted or furnished for remote mounting as shown on the drawings. It shall operate both manually as an isolation switch and automatically during overload and short circuit conditions. The generator circuit breaker shall be sized to carry generator rated output in accordance with NFPA-70, shall be UL listed, and shall meet applicable NEMA standards.

3.11 Generator Set Mounting

The diesel generator set shall be equipped with factory installed vibration isolators mounted between the set and the fabricated steel base to prevent (1) distortion of alignment between generator and engine when installed, and (2) transmission of vibration to the building structure.

The vibration isolators shall be Korfund or approved equal.

3.12 Welding

All welding shall be in accordance with the Seller's standard welding procedures. As a minimum, all production fillet and butt welds shall satisfy the following visual acceptable criteria:

1. No cracks or lack of fusion shall be acceptable.

2. The sum of weld porosity diameters shall not exceed 3/8 in. in any linear inch of weld and shall not exceed 3/4 in. in any 12 in. length of weld.

3. All weld craters shall be filled to the full crosssection of the designated weld.

4. Undercut shall not exceed 1/32 in.

5. Weld filler material reinforcement shall be 0 in. to 1/8 in. max between abutting surfaces and shall have a gradual transition (3 to 1 min) to the plane of the base metal surfaces.

All materials provided by the Seller requiring field welding shall be identified by specification, type, and grade on the outline drawings.

3.13 Vibration and Balance

All equipment as assembled units shall operate with minimum vibration throughout the operating range.

The Seller shall assume all additional shop, shipping, and transportation expense, or cost at the jobsite, to reduce excessive vibration attributable to unbalance of any machines.

Double amplitude of vibration on any plane measured on the shaft adjacent to the bearing housings at the assembled units shall not exceed the following values:

Shaft Speed, rpm	Full amplitude, in
2,000	0.0037
1,500	0.0045
1,000	0.0056
800	0.0062
600	0.0070
400	0.0080
up to 300	0.0090

A suitable vibration measuring device using a forked stick may be used to obtain vibration data for equipment where the shaft vibration is 1.0 mil or greater. For equipment where the shaft vibration is less than 1.0 mil, a proximity type of vibration measuring device is preferred.

3.14 Shop Cleaning

Component parts of the diesel generator system shall be cleaned during final assembly to provide the assembled units free of all foreign material such as chips, waste, mill scale, weld rod spatter, oil, grease, or other deleterious material. Chlorinated solvents shall not be used. Openings shall be closed immediately after cleaning. Rust, if any, shall consist of not more than a surface film discoloration that can be readily removed by wiping.

3.15 Surface Preparation and Painting

After completion of testing, the Seller shall clean, prime, and finish paint all external metal parts, with the exception of machined and bright surfaces. The priming coat shall contain a rust inhibiting pigment.

No filler shall be used before painting. The coating shall be applied only on dry, clean, surfaces, after removal of all oil, paraffin, or grease with a suitable solvent.

Exposed, machined, and bright surfaces subject to corrosion, with the exception of abutting joints and baseplates, shall be coated as soon as practicable after acceptance by the manufacturer's inspector, with a suitable petroleum grease or rust-inhibiting compound.

3.16 Technical Data by Bidder/Seller

These data are identified as follows:

Equipment Emergency Diesel Generators

Project _____

Purchaser _____

Based on specification dated _____

Data Submitted by:

Company _____

Signed by _____

Title _____

Date _____

Each Diesel Engine-Generator

Unit rated output, Continuous Standby, kW _____

Weight of complete set, including cooling water, lube oil, and accessories, lb _____

Overall dimensions of set, L x W x H, ft _____

Maximum time after start signal to accelerate to synchronous speed and rated voltage, sec _____

Number of hours diesel generators can operate at full speed, no load _____

Minimum load that can be carried continuously by the diesel generator at rated speed and voltage _____

3.16.1 Diesel Engine

Manufacturer _____
  Model _____
  Type _____

Brake horsepower
  Continuous duty (8,760 hr) _____
  Turbocharged _____
  Standby duty _____

Speed, rpm _____
Controllable speed range, rpm _____

Bearings material
  Main _____
  Connecting rod _____
Number of power cylinders _____
Bore and stroke, in _____
Displacement, cu in _____
Brake mean effective pressure, psig _____
Cycles _____
Piston speed, fpm _____
WK^2 _____

Torque, lb-ft _____
Combustion airflow, cfm _____
Max allowable pressure drop,
 upstream combustion air intake system,
 in water, gage _____
Max pressure drop across muffler _____

Negative pressure upstream of combustion
 air filter, in water, gage _____

Pressure upstream of muffler, in water, gage _____

Exhaust flow, cfm _____
Max exhaust temperature, °F _____
Max allowable exhaust back pressure, in
 water, gage _____

Total engine heat rejection to room, Btu/h _____
(including engine auxiliaries)

Max operating ambient room temperature, °F _____
Exhaust line size, in _____
Combustion air line size, in _____

3.16.2 Engine Starting System

Electric Start

Electric motor HP _____
Electric motor amps _____
Electric motor volts _____

Battery _____
- Manufacturer _____
- Model No. _____
- Type (nickel-cadmium, etc.) _____
- Type plate construction (pasted multitubular, etc) _____
- Number of starts battery is sized for at minimum ambient temperature _____
- No. of cells _____
- Ampere hr capacity, 8 hr to 1.75 V per cell (77°F) _____
- Guarantee, yr _____
- Expected life _____

Static charger _____
- Manufacturer _____
- Model No. _____
- Type _____
- Rating, continuous amp _____
- Guarantee, yr _____
- Expected life _____

Time to fully charge battery, hr _____

3.16.3 Engine Fuel System

Fuel oil day tank capacity, gal _____
Type of fuel oil _____
Engine fuel consumption at rated load and speed, gpm _____
System pressure, psig _____

3.16.4 Engine Lubrication System

Lube oil SAE rating and type _____
Engine-driven lube oil pump capacity, gpm _____
System pressure, psig _____
Oil fill capacity, gal _____
Engine lube oil consumption, qt per hr _____
Oil temperature, °F _____
Oil filter type _____
Lube oil circulating pump capacity, gpm _____

75

3.16.5 Engine Cooling Water System

Cooling water system capacity, gal _____
Cooling water temperature, °F
  Max (@ radiator) _____
  Min _____
Engine-driven cooling water pump
 capacity, gpm _____
System pressure, psig _____
Expansion tank capacity, gal, if required _____
Radiators _____
  Number _____
  Overall Dimensions _____
  Capacity, gal _____
  Mounting (horizontal or vertical) _____
  Fan type _____
  Fan hp _____
  Fan speed, rpm _____
  Required airflow, at ___°F, cfm
    Max _____
    Min _____
Allowable pressure drop through radiator fan _____
Circulating water pump capacity, gpm _____
Recommended cooling water glycol _____
additive data _____

3.16.6 Engine Protection System

List any additional alarm and shutdown devices considered necessary for safe operation and protection of the engine which the bidder proposes to furnish.

3.16.7 Speed Control System

Manufacturer _____
Type _____
Model _____
Overspeed set point, rpm _____

3.16.8 Generator

Manufacturer _____
Type _____
Model _____
Output, continuous standby duty, kW _____
Overload capability
  Percent _____
  Hours per year _____
Speed, rpm _____
KVA _____
Voltage _____
Frequency, Hz _____

Power factor _____
Phase connection _____
Armature current, amp _____
Recovery after load application, each step
  Min voltage, percent of initial, each step _____
  Max time to initial, sec, each step _____
  Min frequency, percent of initial, each step _____
  Max time to initial, sec, each step _____
Saturation constant _____
Short-circuit ratio _____
Insulation class
  Stator _____
  Rotor _____
Field current at full load, amp _____
Field current at no load, amp _____
Field voltage at full load, V _____
Field voltage at no load, V _____
Resistance at 25°C, ohms per phase
  Stator _____
  Rotor _____
Calculated efficiency at 0.8 pf _____
  110% full load _____
  Full load _____
  75% full load _____
  50% full load _____
  25% full load _____
Reactances at rated kVA, per unit

  Synchronous reactance, Xd _____
  Transient reactance, X'd _____
  Subtransient reactance, X"d _____
  Negative sequence reactance, X2 _____
  Zero sequence reactance, Xo _____
Field time constants, sec
  Open circuit transient _____
  Short circuit transient _____
  Short circuit subtransient _____
Capacitance to ground per phase _____
Generator heat rejection to room at full load, Btu per hr _____
  Generator WR^2, $lb\text{-}ft^2$ _____
Weight, lb
  Stator _____
  Rotor _____
  Total _____

Excitation System

Exciter
  Manufacturer _____
Type _____
Model _____
Capacity, kW _____
Voltage, V _____
Current, amp _____
Max voltage, V _____
  Allowable operation time,
   sec _____
Max current, amp _____

Voltage Regulator
  Manufacturer _____
  Type _____
  Model _____
  Regulation
    Full load _____
    3/4 load _____
    1/2 load _____
    1/4 load _____
  Exciter/regulator heat rejection to the room,
   Btu/h _____

3.16.9 <u>Generator and Excitation Protection System</u>

List any additional alarm and trip devices considered necessary for safe operation and protection of the generator and excitation system, which the bidder proposes to furnish.

3.16.10 <u>Generator Circuit Breaker</u>

Manufacturer _____
Type _____
Dimensions, in.
 LxWxH _____
Weight, lb _____
Rating, amp at ___V/3 phase/__Hz. _____
Interrupting Rating, amp _____
Mounting, Remote or Unit _____

3.16.11 <u>Auxiliary Electric Motors</u>

Motor Service _____
Manufacturer _____
Frame No. _____
Horsepower _____
Service Factor _____
Full Load RPM _____
Full Load Amp _____

Bearing Type ___
Bearing Service-hr. _____
Enclosure _____
Insulation Class _____
Insulation Treatment _____
Stator Temp. Rise at SF Load-°C _____
Conduit Box Dimensions _____

3.16.12 Vibration Isolators

Manufacturer _____
Make _____
Type _____

Best Available Document