11023

PN-AAN-163

930007/67

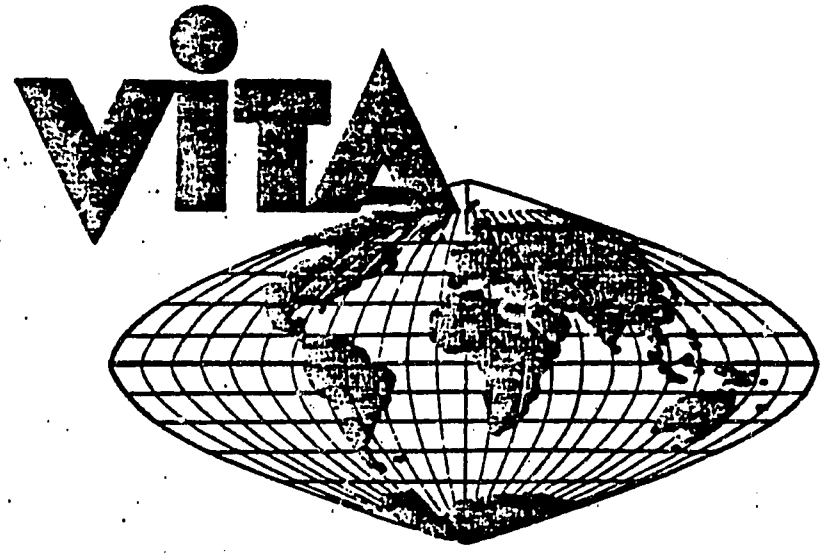

Volunteers for International Technical Assistance

3706 Rhode Island Avenue
Mt. Rainier, MD 20822
USA

BANDAGES IMPREGNATED WITH PLASTER OF PARIS

by
Dr. Louis Navias

BANDAGES IMPREGNATED WITH PLASTER OF PARIS

Introduction

I Materials Required for Plaster Bandages

A. Binders for Holding Plaster of Paris on Cotton Gauze

Seedlac (crude shellac)
Shellac (refined shellac)
Polymerized wood rosin

B. Alcohol as Solvent for Shellac and Wood Rosin Binders

General descriptions
Denatured ethyl alcohol
Proprietary solvents, essentially ethyl alcohol
Water content of alcohols

C. Glycerol (as suspending agent)

II Plaster of Paris

A. Making Plaster of Paris from Natural Gypsum

B. Changing the Set-time of Plaster of Paris by means of Accelerators - Potassium Sulfate
Potassium Alum.

III Cotton Gauze for Plaster of Paris Bandages

IV Making the Final Suspension for Gauze Impregnation

A. Preparation of Solutions of Binder in Alcohol

Dry shellac - alcohol
Shellac - alcohol solution
Seedlac - alcohol
Dry ("Nuroz") wood rosin - alcohol

B. Preparation of Plaster of Paris powder and accelerator

V Methods of Impregnating the Gauze Bandage

A. Dip method

B. Rolling method

VI Pick-up of Plaster of Paris by Gauze

VII Formulae of Final Suspensions

A. Primary formulae

B. Batch formulae

VIII Relative Costs of Raw Materials

IX Precautions in Handling the Materials and Working the Process

X Acknowledgements

Figure 1 Curved trough

" 2 Roller

Table 1 Primary formulae (shellac)

" 2 Primary formulae (seedlac)

" 3 Primary formulae (Nuroz - wood rosin)

BANDAGES IMPREGNATED WITH PLASTER OF PARIS

Introduction

For the support of weak limbs and broken bones during the healing process, it has been common medical practice to bind the affected limb with cotton gauze impregnated with plaster of paris. The process requires that the gauze with the powdered plaster in place be soaked or at least well wetted with water, to react together, and in so doing cause the plaster to set into a solid cast with the gauze.

It is possible to sprinkle the powdered plaster onto the gauze and work the two into place when properly wetted. Such a process is dusty and messy and not too controllable.

For a cleaner operation, it has been the custom to prepare the impregnated bandage beforehand, using some kind of binder to hold the plaster of paris powder onto the cotton gauze. Commercially prepared bandages of this type are made in long lengths and in many widths, from 2" to 8", and are packaged in rolls, which are hygienically sealed. The plaster of paris is well bonded to the gauze. When needed for a surgical purpose, the impregnated bandage is placed in water until it is thoroughly soaked through (requiring only a very few minutes) and then wrapped tightly around the joint or break, which has been properly prepared for the plaster cast. The plaster of paris soaked in water reacts with the water to form a solid cast. In this process the original binder is dissipated or dissociated or loosened in some manner as to free the plaster of paris so that it may react with water.

There are many commercial concerns in the United States and Europe which make such bandages using proprietary formulae for the temporary binder and proprietary methods of application that are unavailable to the general public. These bandages are sold all over the world. However, for several reasons and particularly self-sufficiency and limited funds, it is often necessary to make such bandages on a limited scale, using local materials where possible, to reduce the ultimate cost. This is the main purpose of the following method, developed specially for answering requests received by VITA in recent years.

I Materials Required for Plaster Bandages

A. Binders for holding plaster of paris on cotton gauze

Since plaster of paris reacts with water to set permanently, it is not advisable to use binders which require water for their solution. There are many organic binders which are soluble or at least dispersible in solvents, some being more toxic than others. Of the least toxic solvents ethyl alcohol appears to have the best properties for this purpose, and it is fortunate that there are a few adhesive binders soluble in alcohol.

Natural shellac is such a binder. It originates in India and Siam, and is shipped all over the world for many uses particularly for surface coating of wood. It is not too expensive. Ethyl alcohol is also available in most countries and it is used as the solvent. Detailed formulae for the preparation of the slurry into which the gauze is dipped are given with description of the raw materials and their purpose in the formula and in the process.

Polymerized wood rosin is a synthetic product soluble in ethyl alcohol. Sufficient tests have been made to indicate that such a cheap "wood rosin" may be used as a binder.

Shellac. In certain localities in India, Burma and Thailand (formerly Siam), the conditions of climate and the presence of some favorable trees are inducive to the cultivation of tiny insects known as the lac insect. During its life cycle the insect exudes a wax, a resin, and a red dye. These natural exudations are collected from the surfaces of the branches of the host trees and put through several processes. (See Seedlac)

Seedlac. The crude product is known as "sticklac" and it contains the lac resin, together with wax, coloring matter, insect remains, twigs and other impurities. The crude product is crushed and sieved to remove the coarse impurities and washed with water to remove the red dye. This somewhat refined produce is known as "seedlac" and it is shipped to many countries for further purification and commercial use. The seedlac may contain as much as 8% of adhering impurities.

The seedlac is then purified to form shellac. The early primitive method consisted of warming the seedlac contained in a long cloth bag, and causing the purified lac to ooze through the pores in the bag by twisting the bag to obtain the compression. The purified shellac is removed from the surface of the bag and made into buttons and sheet. Today there are more modern commercial processes for purifying the seedlac to obtain high quality shellac. The natural color of shellac is orange or lemon. By chemical bleaching, so-called white shellac is obtained.

Commercially, shellac in dry flake form is available as well as in solution in denatured ethyl alcohol. Stores sell a product containing 30.7% of shellac by weight dissolved in alcohol for brushing wood surfaces for protection and glossy finish.

The experiments recorded in this report were made with dried seedlac, originating in Siam, and with the commercially available 30.7% bleached shellac solution. The shellac solution is not clear, for it contains some suspended colloidal matter.

Polymerized wood rosin. In the southern states of the U.S.A., many products are made from pine trees and their natural organic saps. By chemical treatment, it is possible to obtain rosin acids of varying complexity and properties. One of these products is sold under the name of "NUROZ" by the Tenneco Chemicals, Inc., the Newport Division Pensacola, Florida, and it contains about 35% of "dimerized rosin acids". It is a resin, pale yellow-brown in color, and quite soluble in ethyl alcohol. Technically it is a partially polymerized wood rosin, made in large quantities, relatively cheap, and shipped to many parts of the world.

B. Alcohol as Solvent for Shellac and Wood Rosin Binders

Shellac and wood rosin are soluble in the simpler alcohols such as methyl alcohol (CH_3OH) and ethyl alcohol (C_2H_5OH). Due to the high toxicity of methyl alcohol it has not been used. For industrial purposes, ethyl alcohol is denatured to prevent its use for human consumption. In many countries "drinkable" alcohol is subject to rigid control for tax purposes. Denatured alcohol is readily available for industrial use without tax, provided definite amounts of required named adulterants are added by the supplier.

Up to recent times ethyl alcohol was obtained by fermenting the juices contained in such naturally grown materials as grapes, sugar-cane, beets, fruits and vegetables, and by treating starchy materials such as corn, rye, barley, rice. The ethyl alcohol obtained by fermentation is dilute, 10-13%, the rest water. By distillation the ethyl alcohol content can be raised to about 95%. Other means must be employed to remove the remaining water. This 95% ethyl alcohol (by volume) termed 190 proof U.S.A., is a standard article of commerce for special medicinal and other purposes. Since this alcohol is drinkable, it is subject to rigid control, such as licensing and taxing of vendors. While such an alcohol would be technically suitable for use as a solvent of shellac, it will not be available.

Where alcohol is preferred for ordinary household and industrial uses, (as in the present case of dissolving shellac), there is available, free of any restrictions, denatured alcohols which have been made undrinkable by the addition of adulterants.

One of the starting materials in the U.S.A. is a Specially Denatured Alcohol (SDA) No. 1, according to government specifications made up of

190 proof ethyl alcohol	100 gal.
Methyl alcohol	5 gal.
	105 gal.

Methyl alcohol is poisonous to human beings, leading to blindness and death.

To prepare the proprietary solvents sold by stores on the open market, the manufacturers add more adulterants to the denatured alcohol (SDA No.1) as in this case:

"Solox" proprietary solvent (manufactured by U.S.Industrial Chemicals Co. N. Y.)

Specially Denatured Alcohol #1	100 gallons
(a) Methyl Isobutyl Ketone	1 "
(b) Ethyl Acetate	1 "
(c) Gasoline	1 "
	103 "

Each manufacturer has several different solvents whose formulae are prepared according to U. S. government standards.

Since in this work we have been able to use the "Solox" solvent successfully, it is desirable to know by calculation the actual final amounts of each chemical constituent.

		By Volume		By Volume
SDA#1	(contains (ethyl alcohol	95	Gal.	90.48%
	((water	5		4.76
	(	100		
	(contains methanol	5		4.76
		105		100.00
"Solox" consists of	ethyl alcohol	90.48	Gal.	87.84%
	water	4.76		4.62
	methanol	4.76		4.62
		100.00		
	a, b, c adulterants	3.00		2.91
		103.00		99.99

The final product contains the sum of 92.46% for both ethyl and methyl alcohols, 2.91% of adulterants some of which may be solvents for shellac, and 4.62% water, which has no effect on the shellac.

However, we have been concerned with the effect of the water content of the binder solution on the premature setting of the plaster of paris in the impregnated gauze bandage. So far, no deleterious effects have been noted. It is obvious that a purer alcohol containing less organic adulterants than the "Solox," and as exemplified by SDA#1, would work equally well, if not better. It is a matter of availability and cost.

Nowadays, some large concerns are making pure ethyl alcohol by synthetic chemical means which contains no water. This alcohol is 200 proof U.S.A. and contains 100% ethyl alcohol. It is also made undrinkable by adding methyl alcohol, and the other organic adulterants. Since this combination does not contain any water, it is called "Solox Anhydrous". It is worthwhile to know that such mixtures exist in commerce. We have not had any experience with such proprietary solvents.

C. Glycerol (Glycerin)

Glycerol is a viscous liquid, a complex alcohol with the formula $C_3H_5(OH)_3$. It is miscible with water and ethyl alcohol. It has a specific gravity of 1.265 in contrast to that of ethyl alcohol, (0.784), and it is used in small amounts to help maintain the suspension of the plaster of paris powder. Shellac is not soluble in glycerin.

II. Plaster of Paris

A. Making Plaster of Paris from Natural Gypsum

Gypsum, $Ca\ SO_4 *2H_2O$, is a soft mineral found in large deposits in many parts of the world. It is often mixed with other minerals -- some soft, some hard -- which will alter the quality and behavior of the gypsum when it is converted to plaster of paris. For some purposes, a very white plaster is required, hence colored impurities such as dark clays, dark minerals, and iron-bearing minerals must be eliminated. For other purposes such as chalk-stick making for school use, it is desirable to have a uniform soft chalk, free of hard mineral particles such as quartz which will scratch the blackboard. For bandages, the extremely white color is of aesthetic appeal only. What is most desirable is a product having a (known) high content of gypsum, which on conversion will give a uniform plaster of paris that will react with water to set to a homogeneous solid cast.

The gypsum rock is crushed and then ground dry to a very fine powder. Commercially, it is ground until 60-65% of the powder passes through a 325 mesh screen (openings 0.0017"). A thin layer of the powder is then heated on a pan, or as a much larger mass in a deep metal container (kettle) with a stirring device. The purpose of the heating is to convert the gypsum into plaster of paris, according to the equation:

$$\underset{\text{(gypsum)}}{CaSO_4*2H_2O} + \text{heat} \longrightarrow \underset{\text{(plaster of paris)}}{CaSO_4*\tfrac{1}{2}H_2O} + \text{steam}$$

The water of crystallization held in the gypsum crystal is released at about 130°C. This "roasting" or "calcining" operation is continued until a temperature of about 160°C is reached, when the powder agitated into a fast moving "fluid" (by the issuing steam) becomes quiet. At this stage, about 3/4 of the water of crystallization has been removed, and the resultant powder is now plaster of paris. Actually, the original gypsum contains 20.9% water of crystallization, and the resulting plaster of paris contains 6.2%. Heating the gypsum at higher temperatures gives plasters with different properties which are not suitable for the bandage process.

The hot powder is removed and cooled, reground when necessary and stored. Small amounts of substances may be added to change the setting time of the plaster. It is important to mix these substances very thoroughly with the plaster powder in order to obtain a uniform product; these substances can be used to accelerate or retard the length of time required for the plaster of paris to set, when mixed with water.

B. Changing the Set-Time of Plaster of Paris by means of Accelerators.

When the finely divided plaster of paris is mixed with water, chemical reactions are started which ultimately cause the fluid mixture to solidify into a solid mass. When the process of setting takes place, the liquid water disappears, and the reaction of setting creates some heating. The chemical reaction can be represented by a chemical equation:

$$\underset{\text{(plaster of paris)}}{CaSO_4{*}\tfrac{1}{2}H_2O} + \text{excess } H_2O \longrightarrow \underset{\text{(gypsum crystals)}}{CaSO_4{*}2H_2O} + \text{Heat} + \text{excess } H_2O$$

The plaster of paris is slightly soluble in water, and out of the supersaturated solution, gypsum crystals in the form of needles separate out and in time create a network which takes on a solid form. Some of the water is now part of the crystals, and some of the water is trapped between the crystals. The trapped water will eventually evaporate into the air.

The length of time required for the plaster of paris to set, i.e. to form a solid shape, will depend upon the fineness of the particles, upon the amount and temperature of the water added to it, and upon the amount and kind of other minerals and salts found as impurities and as natural admixtures in the original gypsum from which the plaster of paris was made. Some chemical impurities cause the plaster of paris to set faster than the pure material; these are known as accelerators. Other impurities cause the plaster of paris to set slower; these are known as retarders.

<u>Potassium sulfate</u>: An example of a suitable accelerator is the salt, potassium sulfate (K_2SO_4). A set of simple experiments was carried out in the following manner to show the effect of adding different amounts of this salt to plaster of paris. Small paper cups (coated with some organic material to make them impervious to water) were used as containers. The plaster of paris and the water content were kept constant, and the amount of K_2SO_4 was weighed carefully and varied from one cup to the next.

The K_2SO_4 is dissolved completely in tap water in the cup. It is important to make sure that all the salt is in complete solution by stirring and by examination. The plaster of paris powder is added to the water as quickly as possible, with continuous stirring to remove lumps. As soon as this stage is reached, time is recorded as time zero. The stirrer is removed,

and the suspension is observed. Gentle squeezing of the paper cup will indicate that the suspension is still fluid. At some point in time the paper cup begins to resist the squeezing; some cracks may appear on the surface due to the squeezing, all indicating that true setting has begun. This time should be recorded. Soon after, the whole mass will take on a firm rigidity, the liquid on the surface will disappear, and the time is recorded for final set. Some heating of the mass will be felt as the reactions take place throughout.

At first it is important to make some preliminary trials, so as to become experienced with the reactions and their effects. It is still more important to use the same procedures and the same criteria in deciding upon the times of set.

Here is one group of experiments using 50.0 gms. of plaster of paris and 58.0 gms. of water and 0-2.0 gms. of K_2SO_4. In the following table the K_2SO_4 is expressed as the % of K_2SO_4 added to 100 gms. of plaster of paris, for convenience. The plaster of paris, in this case is a gray powder, made for use in stucco walls and contains no accelerator or retarder.

K_2SO_4 added to 100 gms. plaster of paris	Time of Set
0 %	40-42 minutes
0.2%	33-35 "
1.0%	13-15 "
2.0%	7 - 8 "
3.0%	4 - 5 "
4.0%	4 - 5 "

In the building trades, plaster of paris with no accelerator is used for stucco work. For so-called quick setting plaster, a setting time of 12-15 minutes is required. For surgical bandages faster setting material may be required. It is very important to note that each supply of plaster of paris must be tested to determine how much accelerator is needed for a particular function. In contrast to the 1.0% K_2SO_4 required here to accelerate the set of a stucco plaster of paris to 13-15 minutes, a commercial white grade for internal room wall use may require only 0.06% of K_2SO_4 for the same setting time.

Potassium alum: Potassium alum is a rather complex substance which contains potassium sulfate in its structure, as noted from its formula when written in this fashion:

$$Al_2(SO_4)_3 * K_2SO_4 * 24H_2O.$$

Assuming that a batch calls for one part of K_2SO_4 by weight, then 5.45 parts of potassium alum would have to be used to obtain that 1 part of K_2SO_4. The potassium alum makes a good accelerator for plaster of paris. However, more alum is used, and it is more expensive than K_2SO_4.

III Cotton Gauze for Plaster of Paris Bandages

A well-known commercial brand of plaster of paris bandage was examined

carefully. A piece 6" x 6" weighed 10.78 gms. It was washed in water to remove all plaster. The dried cotton gauze weighed 0.90 gms., and its mesh measured 26-28 per inch in both directions. This single strand gauze appears to be very suitable for maintaining the plaster of paris.

Plain gauze of the type mentioned above is available commercially. There is also so-called reinforced or improved gauze, having two strands close together, then a space, with two more closely placed strands running parallel, all in one direction. This double-weave pattern is crossed at right angles by single strands equally spaced. The large square openings amount to 32 mesh per inch, in both directions (1/32" space). The space between the two closely spaced strands in one direction measures about 1/64".

Both types of gauze have been used for making bandages. However, most of the work was carried out with the (regular) single strand gauze.

Here are the weights in grams for pieces of gauze 10 square inch in area:

Commercial plaster of paris bandage (washed free) 6" wide	0.25 gms.
"Nuwrap" bandage 2" wide	0.20 "
"Nuwrap" bandage 3" wide	0.23 "
Reinforced bandage 2" wide	0.31 "

IV Making the Final Suspension for Gauze Impregnation

As promoted in this work there are five ingredients in the final suspension:

(1) organic binder
(2) denatured alcohol
(3) glycerine
(4) plaster of paris powder
(5) accelerator powder

The organic binder such as shellac, seedlac or "Nuroz" is dissolved in the denatured alcohol and their proportions properly adjusted as indicated in this manual. The glycerine is added to this binder solution and well integrated by mixing and shaking in closed containers.

The powders of plaster and accelerator have been thoroughly mixed and dispersed.

The mixed powders are now added to the binder solution, a little at a time, with continuous stirring to form the final suspension. It is important to prevent the inclusion of lumps of powder which will not disperse readily. The final suspension should be uniform in color and in dispersion. It should be allowed to stand for awhile and then remixed several times. The glycerine will help in maintaining suspension but not sufficiently enough to prevent settling of the plaster of paris. Hence, frequent stirring is required.

As a precaution, it is desirable to pour this suspension through a coarse screen (about 18 mesh per inch) into the container where the gauze impregnation will take place. There should be little or no material held on the screen.

The color of the suspension, and hence the color of the impregnated gauze will depend upon the dominant colors of the raw materials. White shellac and white plaster of paris yield a white product. Seedlac gives a mild reddish tint to the impregnated gauze, and the color is somewhat modified by the color of the plaster of paris. Plaster of paris-stucco grade is dark gray in color, and the final suspension and the gauze made from it are quite gray.

A. Preparation of Solutions of Binder in Alcohol

All materials are carefully weighed.

Dry shellac - alcohol. The dried shellac in flake or powdered form is added to the denatured alcohol with stirring or shaking until all particles have disappeared. On standing, a cloudy solution settles slowly leaving a clear supernatant liquid above it. For a batch, the entire mixture is used after shaking. The color of the suspension will depend upon the color of the shellac (whether orange or white) and upon the kinds of treatment such as dewaxing and bleaching it may have received.

Shellac-alcohol solution. Here we refer to the commercial products made and sold for treatment of wood surfaces. These shellacs have been chemically treated to remove color and wax. Such solutions are made with denatured alcohol and they are easily shaken into uniform suspensions. The proportions of alcohol are given by weight. There are several different popular proportions on the market. The one used in this work contains 30.7% shellac and 69.3% denatured alcohol (by weight) to which more alcohol is added according to the formula required.

Seedlac-alcohol. The (crude) seedlac is marketed as reddish colored granules. It is necessary to remove the insoluble impurities, such as wood and other inert inorganic and organic matter. The proper proportions of seedlac to alcohol used in a final batch are weighed out and mixed and stirred. For ease of handling, it is best to use the most dilute solution possible. After all seedlac particles have disappeared, the solution will contain extraneous inert particles which are separated on a screen of about 45 mesh per inch. The screening should be done quickly to avoid excessive evaporation of the alcohol. By weighing the residue after screening, we have found about 2% of residue by weight in Siam seedlac. The residue is bulky and deceptive in weighing so little. Solutions containing 8-10% seedlac are readily handled.

The seedlac solutions are reddish in color from the dye present, and they contain some waxy substances which do not interfere with the required processes required later.

The screens should be cleaned immediately by brushing with alcohol since the thin film of seedlac closes the pores of the screen very readily.

Dry "Nuroz" - alcohol. Polymerized wood rosin represented here by the commercial product "Nuroz" comes in large solid chunks, pale yellow in color. They are easily broken down mechanically and, in small particles or powder, dissolve quickly in denatured alcohol. Since this material is chemically prepared in large quantities there is no need for any cleaning operation. The final, dilute proportions used in a batch can be weighed out and mixed. A 8-10% solution is easily made by permitting a weighed batch to stand for a few hours.

"Nuroz" is produced by Tenneco Chemicals, Inc., the Newport Division, Pensacola, Florida.

B. Preparation of Plaster of Paris Powder and Accelerator

It is very important that the plaster of paris powder be kept dry and not exposed to high humidity for any length of time. In a damp basement, for instance, the plaster will remain in powder form and will set in a large shape when properly mixed with water. However, the same plaster will set prematurely in a thin layer in a partial manner in a gauze bandage, making the latter thoroughly useless. Even reheating the plaster powder to 110°C to remove absorbed moisture is not sufficient to restore the required properties.

The accelerator substance, be it potassium sulfate or potassium alum, must be ground very finely in a mortar or ball mill before being mixed with the plaster of paris powder. If a large mortar is available, the weighed accelerator is ground first and the plaster of paris is added, small amounts at a time, with grinding and mixing taking place continuously. It is of extreme importance to disperse the accelerator powder evenly and uniformly throughout the plaster powder.

If a ball mill is available, the accelerator and plaster can be milled together for a few hours to assure homogeneous distribution.

It is also possible to get uniform mixing of the two powders by allowing them to rotate in a can or container in which a large bundle of wire is used as a baffle. As the rotating powder comes in contact with the wires, the powder separates and reunites, thus mixing. Such a can, with cover, may be set in a lathe or other rotating means.

V Methods of Impregnating the Gauze Bandage

Two methods have been worked on and both require loading the gauze with the final suspension, removing the gauze from the suspension, and then allowing the impregnated gauze to dry in a vertical position. The drying step involves the removal of the alcohol by evaporation. Here are the two methods called the Dip Method and the Rolling Method:

(A) Dip Method: The suspension is poured into a deep vessel which can hold liquid 3 or more inches deep. Gauze, three or more feet in length, is lowered into the suspension. It is folded in zig-zag fashion until all the gauze is in the suspension. It is then raised slowly out of the suspension and hung vertically to drain and to dry. To obtain uniform impregnation of the gauze, it is necessary

to stir the suspension frequently. This is difficult to do properly; even numerous hand-driven and motor-driven devices have been tried.

(B) Rolling Method: This method, modified from paint application techniques, is far superior. The container has a bottom made of a strip of metal 4" wide, curved lengthwise to form the bottom of a trough with a radius of 12". Ample sides hold the curved trough in place by means of soldered tabs. Such a water-tight trough can be made by a tinsmith. Figure 1 shows a wooden trough of similar dimensions.

The other important item for this method is a roller (see Figure 2) such as those used to apply paint to flat surfaces. It is made of a heavy paper tube with thin metal end caps. The tube is covered with a soft cloth material having a vertical "pile" like a rug. The "pile" soaks up the suspension and when rolled on a material, leaves a layer of suspension. A heavy metal rod pierces the two end plates to form an axle on which the roller turns. The overall diameter of the roller is nearly 2 inches, and the "pile" is about 3/16 inch thick. Its length is 3 inches. Many home-made modifications would be suitable such as a wooden cylinder covered with a piece of rug.

For actual use, the suspension is poured into the trough through an 18 mesh screen. The roller is soaked slightly in alcohol and then run back and forth in the suspension contained in the trough. This action stirs the suspension at the lowest (bottom) level and loads the "pile" with suspension. A strip of gauze 3 feet long, 2 inches wide, is then placed near one end of the trough, dragging the gauze over the metal edge down into the suspension. The roller is placed over the gauze, as low as it will go. The suspension is slowly rolled into the gauze as the gauze is dragged slowly out of the suspension. One person can operate the process easily; one hand drawing the gauze, the other hand running the roller. For hand operation it is easier to do the operation in steps -- rolling a section then pulling it out that much -- until the entire length has been impregnated. With proper proportions of liquids to solids, there is little drainage from the gauze at the end. Care needs to be taken to prevent the filled gauze from touching the sides of the trough, for this touching removes some material from the gauze. This length of gauze is hung up to dry. More lengths of gauze are treated in the same way.

It is desirable to clean the trough immediately after use, otherwise the binder and plaster adhere tenaciously. It is important to clean the roller immediately after use by running it back and forth on sheets of paper to remove the suspension. The roller should be completely immersed in alcohol while being stored. If the shellac should harden on the roller, the roller becomes useless.

The big advantage of the curved trough is that regardless of quantity of suspension, the suspension will always accumulate at the lowest central part where it comes in contact with roller and gauze. It is possible to use a flat trough with the precaution that the rolling causes the suspension to build up at the ends of the trough where it cannot be reached by either the roller or the gauze.

The disadvantage of any large trough is the large surface area available for evaporation of alcohol. Keeping the surface covered between operations minimizes this fault.

The curved trough roller method lends itself to pilot plant operation. Instead of one roller, two or more rollers could be fixed in stationary positions at entrance, center, and exit end. The coated gauze could be drawn upward through a heated chamber for drying and then onto a winding machine.

VI Pick-up of Plaster of Paris by Gauze

In each of the batches described in Table 3, lengths of gauze about 3 feet long and 2 inches wide were rolled in a trough to be impregnated. After drying, pieces 15 inches long were cut from lengths 1 and 3 and weighed. The weight of gauze, 15" x 2" was previously determined and subtracted from the combined weight. The pick-up is expressed as the net weight of plaster of paris on the gauze, calculated on a square inch area basis. (pop = plaster of paris).

In the case of R29 where (low grade) stucco plaster of paris was used, in a somewhat thick suspension, the pick-up varied more than the other formulae (see Table 1).

However, it makes a good example: -- (calculations for 30 sq.inches)

Length	Wgt.of pop + gauze	Wgt.of gauze	Wgt. of pop.	Wgt.of pop.per 1 sq.inch
1.	8.46 gm.	0.60 gm.	7.86 gm.	0.262 gm.
3.	9.50 "	0.60 "	8.90 "	0.297 "

In one case, R30, both 2" and 3" wide gauze were impregnated. Fifteen inch lengths were weighed. The results are as follows:

Width	Length	Weight of pop + gauze	Weight of gauze	Weight of pop	Weight of pop per 1 sq. inch
2"	15"	9.52 gms.	0.61 gms.	8.91 gms.	0.297 gms.
3"	15"	15.76 "	1.03 "	14.73 "	0.327 "

For control of the process, it is necessary to determine frequently the exact amount of plaster picked up by the gauze. Actual weighings on a definite length or area of gauze give the simplest and most accurate accounting.

In comparison, the commercial bandage had a content of plaster of paris equivalent to a pick-up of 0.274 gms. per 1 square inch.

VII Formulae of Final Suspensions

A. Primary Formulae

To make the comparisons of various compositions easy, Table 1 has been compiled where the binder is given on a dry weight basis. In

addition, the total weight of each formula shows the actual amount which was used in the experiment using the Rolling method, hence the R numbers.

In the case of the shellac series, R26, 27 and 29, the Zinsser shellac in alcohol was used, hence it will be necessary to refer to the section describing the Batch Formulae. In the case of the seedlac series, R24 and 25, the dry seedlac was dissolved in alcohol in the proportions shown in Table 2, hence the Primary Formulae and the Batch Formulae are identical. The same can be said for the dry "Nuroz" dissolved in alcohol in R28 (Table 3)

For the Rolling Method, it is important to maintain a fairly narrow range of the ratio by weight of solids to liquids. The solids consist of the sum of the plaster of paris and the accelerator. The liquids consist of the binder, alcohol and glycerine, since they form the final solution to which the solids are added and suspended therein. From many trials we have learned that this ratio should be about 1.32 to 1.41, and this applies to the three different binders and to the two different sources of plaster of paris.

The maintenance of this ratio of solids to liquids will be the major factor in the amount of plaster of paris picked up by the gauze as it goes through the trough in the Rolling Method. The more plaster in suspension, the greater the pick-up as the ratio increases. However, the uniformity of pick-up is not as good with a heavy pick-up as it is with a lighter one.

Another very important ratio is that of the binder to the plaster of paris, for these are the two ingredients which ultimately form the coating on the impregnated gauze. Too little binder will form a powdery bandage and the plaster of paris will be removed as the bandage is rolled, or put in water, or applied to the human limb. Our experience shows that the ratio of binder to 100 parts of plaster of paris by weight would lay in the range of 7.5 to 10 (see Tables 1, 2 and 3). This ratio will vary depending upon the kind of binder and upon the kind and fineness of the plaster of paris, and to a lesser extent, upon the method of impregnation of the gauze.

B. Batch Formulae

The commercially available pure white "Bulls Eye" shellac sold by Wm. Zinsser and Co., New York was used. The composition on the can gives solids - pure shellac 30.7%, and solvent - specially Denatured Alcohol Formula #1 69.3% (by weight). This composition is known as a 3lb. cut and used mainly for giving wood surfaces a hard shiny finish. The 3lb. cut means that 3 lbs. of shellac has been dissolved in one gallon of denatured alcohol. Other cuts are used for special purposes.

To make R29, 11.0 gms. of shellac is needed in a total batch weighing 299.0 gms. Since 30.7 gms. of shellac are contained in 100.0 gms. of Zinsser/shellac/alcohol, then 11.0 gms. of shellac are to be found in 36.0 gms. of Z/s/a. Denatured alcohol (in our case "Solox Proprietary Solvent" made by USI Chemicals) was added to make up the requirement according to the Primary Formula R29 (see Table 1).

The actual batch weighed out for R29 consists of:

Zinsser/shellac/alcohol	36.0 gms.
Denatured alcohol (Solex)	84.0 "
	120.0 "
Glycerine	4.0 "
Plaster of paris (stucco type)	170.0 "
K_2SO_4 (accelerator)	5.0 "
	299.0 "

VIII Relative costs of Raw Materials

For comparison purposes mainly, here are prices quoted by the "Oil, Paint and Drug Reporter" August 14, 1970 for large quantities f.o.b. New York.

	Per gallon	Per pound
Shellac - bleached		$ .44
" "		.56
" - orange - lemon		.38
Ethyl alcohol (190 proof)	$ .54	.08
Denatured alcohol, proprietary solvent	.58	.085
Denatured alcohol (specially denatured)	.55	.08
Glycerine USP 99%		.21
K_2SO_4 crystals		.31
" " granular		.18
" " powder		.17

From other sources of information

Seedlac	.15
"Nurom"	.20
Plaster of paris	.03

IX Precautions in Handling the Materials and Working the Process

(1) Plaster of paris -- Must be kept dry. Powder stored in a humid atmosphere will not react properly in a bandage.

(2) Ethyl alcohol, denatured -- Toxic and deadly when taken internally. The alcohol vapors should not be breathed continuously.

(3) Proprietary (ethyl alcohol) solvents are even worse than denatured ethyl alcohol. Same precautions.

(4) Glycerine is very hygroscopic. To maintain concentration, it should be stored in closed containers. Otherwise water can be unintentionally introduced to the batch.

(5) Accelerators, such as potassium sulfate or alum, should be very finely divided before adding to the plaster of paris powder.

(6) All solutions and suspensions containing ethyl alcohol should be kept in closed containers or closely covered to prevent evaporation.

(7) Screens and containers used with a binder-alcohol, solution such as seedlac, shellac and wood rosin, should be washed with alcohol soon after use to prevent the formation of a hard film of binder.

X Acknowledgements

This problem was proposed to VITA by Professor V. Ennis Pilcher of Union College, Schenectady, New York, when he visited the leprosarium in Addis Ababa, Ethiopia, last year. His interest extended to include participation by two juniors in the solution of this problem in a Union College Comprehensive Education Program, whose advisor was Professor Roger H. Hooverman. The students, Steven Markus and Robert Sandler, worked effectively on the Dip Method of Application under the direction of the author. To all these men the author gives his grateful thanks. All shortcomings are claimed by the author.

TABLE I

PRIMARY FORMULAE (Shellac)

	R26	R27		R29
	gms.	gms.		gms.
Shellac	12.8	11.0	Shellac	11.0
Alcohol	107.2	109.0	Alcohol	109.0
	120.0	120.0		120.0
Glycerine	4.0	4.0	Glycerine	4.0
Pop (12 min.)	160.0	170.0	pop (Stucco)	170.0
K_2SO_4	4.0	5.0	K_2SO_4	5.0
	288.0	299.0		299.0
Ratio by weight Shellac / Pop	8 / 100	6.5 / 100		6.5 / 100
Ratio by weight Solids / Liquids	1.32	1.41		1.41
Pick up (2" gauze) gms. / sq. inch of gauze	0.26	0.26-0.28		0.26-0.30

NOTE: Pop stands for plaster of paris

TABLE 2

PRIMARY FORMULAE (Seedlac)

	R24	R25	R30
	gms.	gms.	gms.
Seedlac	16.0	12.8	14.0
Alcohol	104.0	107.2	106.0
	120.0	120.0	120.0
Glycerine	4.0	4.0	4.0
Pop (12 min.)	160.0	160.0	160.0
K_2SO_4	4.0	4.0	4.0
	288.0	288.0	288.0
Ratio by weight Seedlac / Pop	10 / 100	8 / 100	8.8 / 100
Ratio by weight Solids / Liquids	1.32	1.32	1.32
Pickup (2" gauze) gms. / sq. inch of gauze	0.30	0.25	0.30
Pick up (3" gauze)			0.33

TABLE 3

PRIMARY FORMULAE (Nuroz-Wood Rosin)

	R28
	gms.
"Nuroz"	11.0
Alcohol	109.0
	120.0
Glycerine	4.0
Pop (12 min.)	160.0
K_2SO_4	4.0
	288.0
Ratio by weight Nuroz / Pop	6.9 / 100
Ratio by weight Solids / Liquids	1.32
Pickup (2" gauze) gms. / sq.inch of gauze	0.30

ROLLING TROUGH WITH CURVED BOTTOM

Fig I.

CONSTRUCTION NOTES: Box can be made of galvanized iron, G.I. sheet, copper sheet or, as shown here, wood. Bottom must conform roughly to 12" radius. Suggest curving intersection of bottom piece with end pieces for easier cleaning. Top edges are rounded for both safe operation and to permit gauze to be removed without scraping off plaster. Coat wood pa with an alcohol-resistant sealer or paint.

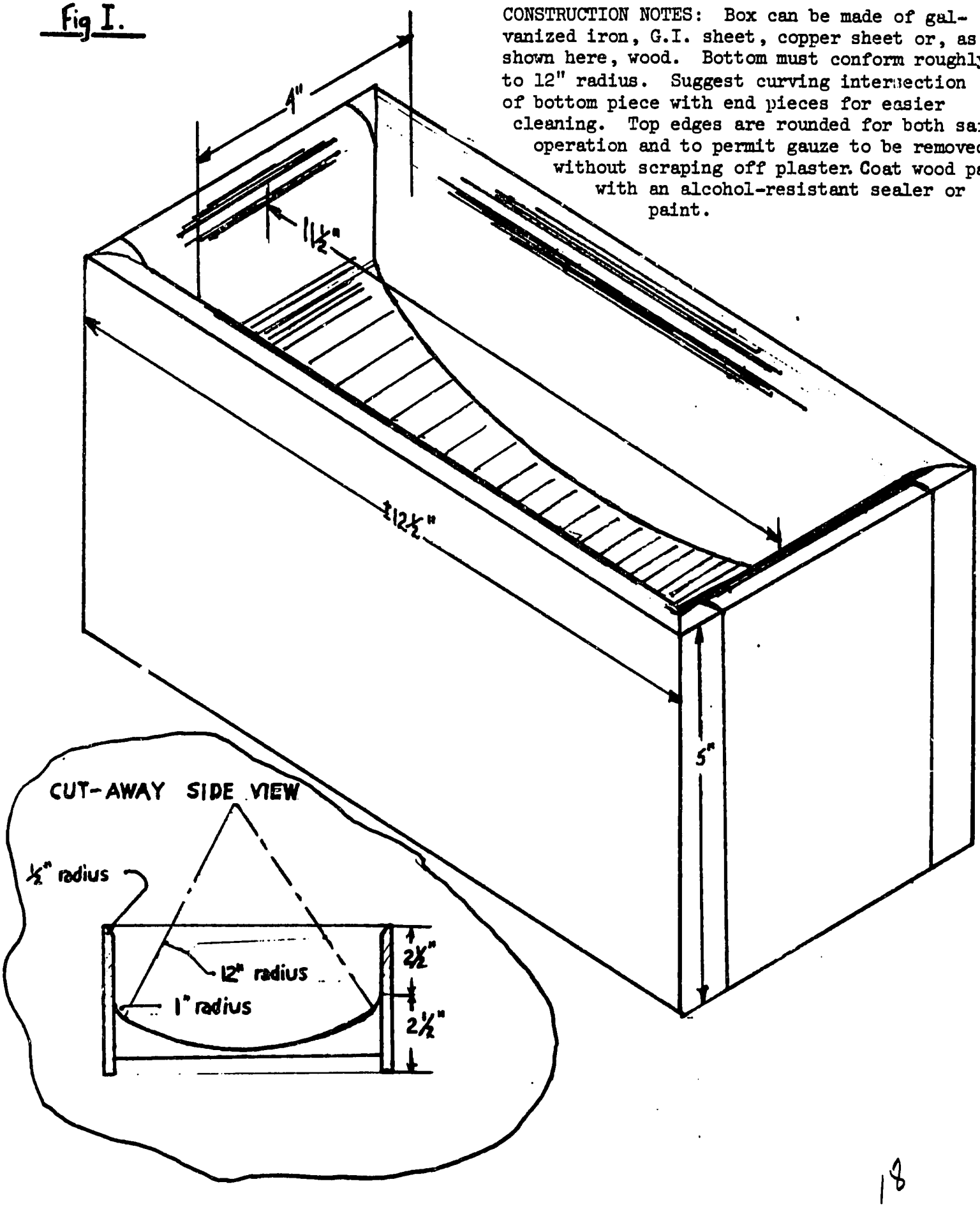

ROLLER - CONSTRUCTION

fig. 2.
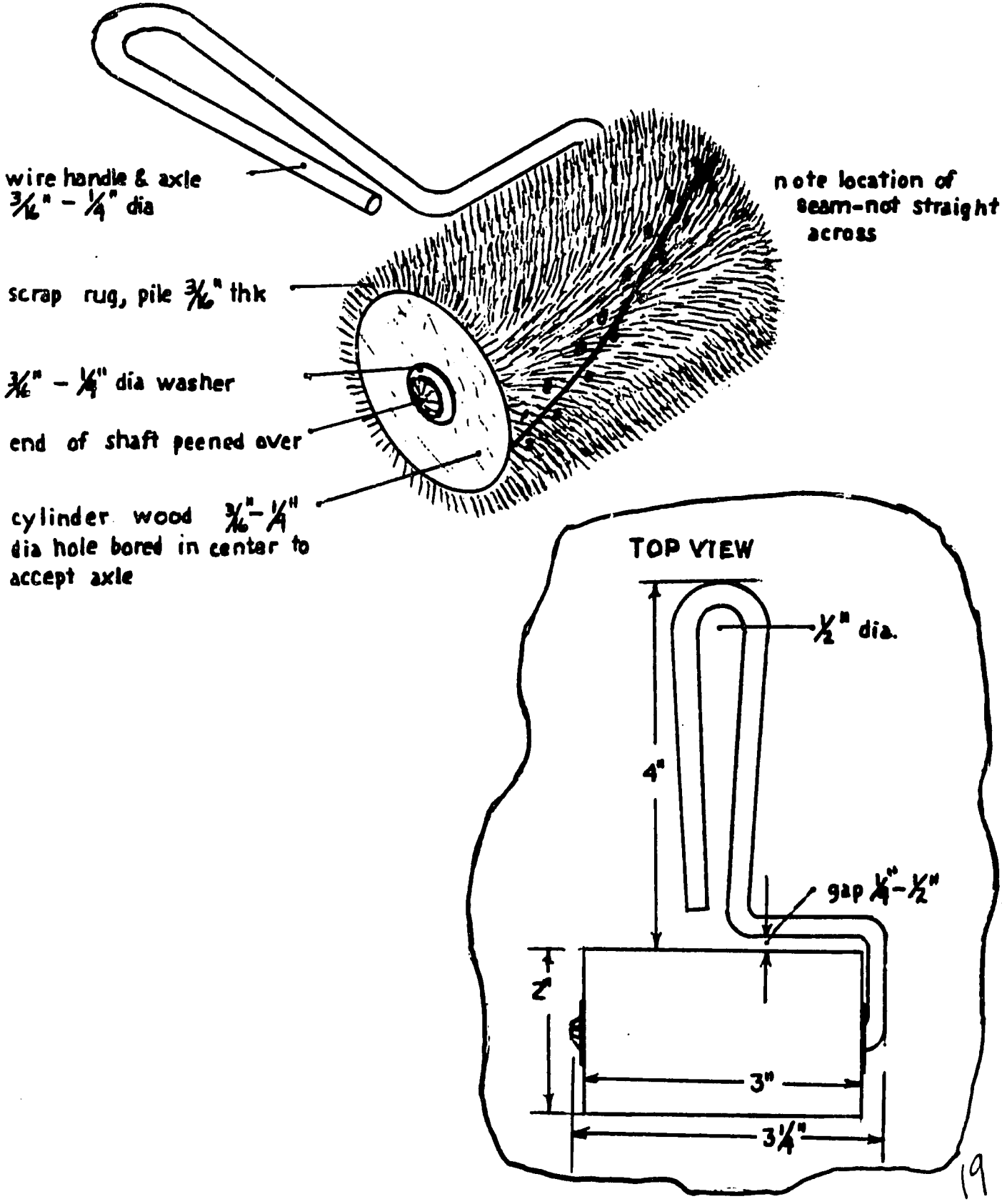
CONSTRUCTION NOTES: Drill center hole into wood cylinder prior to final shaping. Next, carpet or rug section is cut to shape and tacked onto cylinder at a slant as shown. Also carpet/rug should have fibers which protrude straight out from backing. After inserting cylinder and washers on axle anchor the assembly is completed by peening protruding end of axle.