11054

SOLAR GRAIN DRYER

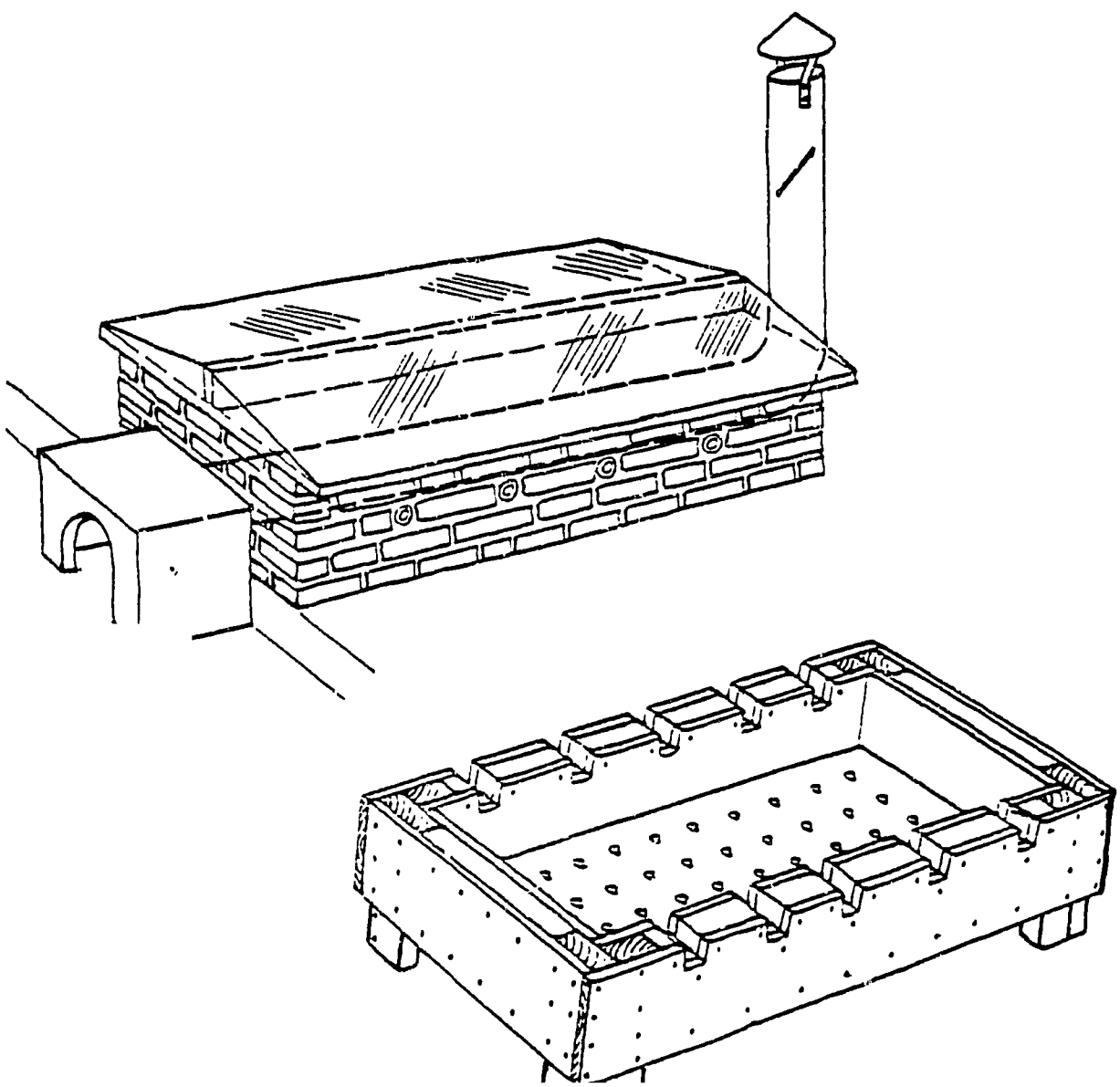

a VITA publication

ISBN 0-86619-027-9

© 1980 Volunteers in Technical Assistance

SOLAR GRAIN DRYER

Published by

VOLUNTEERS IN TECHNICAL ASSISTANCE
3706 Rhode Island Avenue
Mt. Rainier, Maryland 20822 USA

This book is one of a series of manuals on renewable energy technologies. It is primarily intended for use by people in international development projects. The construction techniques and ideas presented here are, however, useful to anyone seeking to become energy self-sufficient.

SOLAR GRAIN DRYER

I. **WHAT IT IS AND HOW IT IS USEFUL** 1

Applications 2
Advantages 2
Considerations 2
Cost Estimate 3

II. **MAKING THE DECISION AND FOLLOWING THROUGH** 5

III. **PRECONSTRUCTION CONSIDERATIONS** 7

Possible Applications 7
Tools and Materials 8

IV. **CONSTRUCTION PROCEDURES** 11

Model 1--Description 11
Construct the Dryer 13
Cut Air Outlets--Three Different Ways 18
Construct the Cover (For Models 1 and 2 Dryers) . 20
Construct the Drying Trays (For Models 1 and 2) . 23
Model 2--Description 24
Choose a Site 24
Prepare the Site 25
Prepare Bamboo Pipes 26
Finish the Walls 28
Paint the Inside 29
Construct the Cover and Drying Trays 29
Modification of Model 2 30

V. **OPERATION AND MAINTENANCE** 33

Cleanliness 33
Temperature Control 33
Shade Drying 34
Fogging 34
"Storage" Heating 35

VI. **FURTHER INFORMATION RESOURCES** 37

VII. DICTIONARY OF TERMS 41

VIII. CONVERSION TABLES 43

APPENDIX I. DECISION MAKING WORKSHEET 45

APPENDIX II. RECORD KEEPING WORKSHEET 49

APPENDIX III. Brief History of the Grain Storage Program of the Agriculture Service of Benin and the US Peace Corps 53

SOLAR GRAIN DRYER

I. WHAT IT IS AND HOW IT IS USEFUL

Solar crop dryers are among the most important of the small-scale solar technologies currently having application in developing areas. People are used to making the connection between crop drying and the sun--sun-drying fruits, vegetables, and grain has been and continues to be a major means of preserving food in many areas. In light of this, it is relatively easy for people to accept.

The following solar dryer plans are taken from Small Farm Grain Storage, a manual produced by ACTION/Peace Corps and Volunteers in Technical Assistance (VITA). Small Farm Grain Storage assists small-scale farmers in the fight against post-harvest grain loss. Both the manual and the plans are in use around the world.

There are two solar dryers discussed here. One dryer is portable; the other is built upon a permanent site. Both are presented in non-technical, fully illustrated format.

A basic solar dryer consists of an insulated box covered with a double layer of plastic film. The box is painted black to increase heat absorption. The grain to be dried is spread out on wire mesh trays that rest inside the box. The heat from the sun passes through the plastic, is held by the insulated box, and dries the grain.

These dryers have been used successfully to dry grain from 25% to under 12% moisture in one day or less. They can also be used to dry other crops--copra, cassava, fruits, vegetables, etc.

Applications:

- Dries grains, vegetables, and fruits.
- Food preservation.

Advantages:

- No fuel costs.
- Sun-drying time is reduced because the heat of the sun is made stronger by covering the drying grain with a double layer of clear plastic film.
- Can be used to dry other crops--copra, cassava, fruits, and vegetables.
- Crops are not exposed to insects, weather, etc. while drying.

Considerations:

- Temperatures in the dryer may build up to 65-80°C (150-176°F). This means that grains such as rice (which crack at temperatures about 50°C (122°F), or seed grains (which can be dried at temperatures no higher than 40-45°C [105-114°F]) can be damaged.
- Grain must be watched carefully. If no thermometer is available, trial and error will be necessary.
- Dryers are most useful only at certain hours of the day and limited to daylight hours.

COST ESTIMATE*

$20 to $150 (US) including materials and labor (1980).

---

*Cost estimates serve only as a guide and will vary from country to country.

II. MAKING THE DECISION AND FOLLOWING THROUGH

When determining whether a project is worth the time, effort, and expense involved, consider social, cultural, and environmental factors as well as economic ones. What is the purpose of the effort? Who will benefit most? What will the consequences be if the effort is successful? Or if it fails?

Having made an informed technology choice, it is important to keep good records. It is helpful from the beginning to keep data on needs, site selection, resource availability, construction progress, labor and materials costs, test findings, etc. The information may prove an important reference if existing plans and methods need to be altered. It can be helpful in pinpointing "what went wrong?" And, of course, it is important to share data with other people.

The technologies presented in this series have been tested carefully, and are actually used in many parts of the world. However, extensive and controlled field tests have not been conducted for many of them, even some of the most common ones. Even though we know that these technologies work well in some situations, it is important to gather specific information on why they perform properly in one place and not in another.

Well-documented models of field activities provide important information for the development worker. It is obviously important for a development worker in Colombia to have the technical design for a dryer built and used in Senegal. But it is even more important to have a full narrative about the process that provides details on materials, labor, design changes, and so forth. This model can provide a useful frame of reference.

Previous Page Blank

A reliable bank of such field information is now growing. It exists to help spread the word about these and other technologies, lessening the dependence of the developing world on expensive and finite energy resources.

A practical record-keeping format can be found in Appendix II.

III. PRECONSTRUCTION CONSIDERATIONS

POSSIBLE APPLICATIONS

Grains can be dried either "in the head" or after threshing, before they are placed in storage. If dried "in the head," grains should be threshed before storage since closely packed grain is less subject to insect attack.

Groundnuts can be dried either in the shell or after shelling. Storage in the shell provides protection against insect attack.

Shattering sesame may be harvested before pods are quite ripe and dried in trays with very fine mesh bottoms. It will then shatter in the dryer. But since all the seeds will be retained, this method of dealing with sesame has great advantages.

Threshed grains should be spread in a 1cm to 4cm (3/8" to 1-1/2") deep layer on drying trays of appropriate mesh size, so as to give a loading of about 7-10 kg (15.5-22 lb) per square meter. For bulky materials, such as unthreshed finger millet or sorghum, layers up to 7.5cm (3") deep can be used. For groundnuts in the shell, layers may be up to 5cm (2") deep.

For very small seeds, such as finger millet or sesame, trays with a very fine mesh will be needed. Mosquito netting or tightly stretched Hessian sacking would be appropriate.

The dryer models here were designed and tested for drying cereal grains. They are also suitable for root crops, fruits, and vegetables. The dryers hold 8-11 kg (17.5-24.25 lb) for each square meter of drying floor. Dryers of the size presented here will dry 18-24 kg (39.25-53 lb) each day. Farmers who want

(39.25-53 lb) each day. Farmers who want to dry more grain will have to make a larger dryer or build several small ones.

These dryers can be made from whatever materials are most available locally. The dimensions given here are for general guidance. You can change the length, width, or depth of these dryers without affecting their efficiency.

The sketches for Models 1 and 2 are based on a useful, practical working size of 1m wide X 2m long X 23-30cm deep (40" X 80" X 9-12"). But changes in area can be made to suit local conditions and dimensions of materials available.

Important: The only dimension which should be followed as closely as possible is the thickness of insulation on the Model 1 box-type dryer. Where wood shavings, wood wool, dried grass, leaves, or similar materials are being used, a minimum thickness of 5cm should be used.

TOOLS AND MATERIALS

Dryer--Model 1

- Hammer
- Screwdriver
- Square
- Saw
- Brace
- 2.5cm (1") wood drill
- 2cm (3/4") wood chisel

- Wooden planking or plywood for sides, ends, and bottom of boxes. Use wood from old packing cases if it is available.

- Lengths of timber:

  - 4 pieces 5 X 10cm (2" X 4") for legs
  - 4 pieces 5 X 5cm (2" X 2") for legs

- 13 pieces 5 X 5cm (2" X 2") for the side, end, and bottom spacer strips

- Insulating material: wood wool, dried grass or leaves, coir fibre, etc.

- Nails and screwnails of appropriate size

- Flat or matte-black paint or other suitable black staining material, e.g., charcoal powder and linseed oil paint that is not shiny or glossy, and clay mix or linseed oil, sap, etc.

- Wood preservative

- Gloss paint, dark color, or marine varnish

Dryer--Model 2

- Large knife, axe or machete
- Coping saw or wood rasp
- 2cm (3/4") chisel

- Clay bricks or bricks made from similar material
- Mortar or clay for laying bricks
- Thick bamboo, 6-7.5cm (2.5-3") diameter

Dryer Cover--Models 1 and 2

- Saw
- Sharp knife or scissors
- Marking gauge
- Square - useful in making corners

- Lengths of 2cm X 5cm (1" X 2") lumber

- Blue tacks, 1cm (3/8"), or large office stapler

- Polyethylene (transparent plastic film), preferably 0.127mm or heavier

Drying Tray--Models 1 and 2

- Scrap wood

- Fine wire mesh or available local materials: papyrus reed matting, or a frame with slats of reed or split bamboo, for example, make an excellent support on which material can be dried. Coarse Hessian sacking material, or open weave grass, or fibre matting stretched on a frame also can be used.

IV. CONSTRUCTION PROCEDURES

MODEL 1--DESCRIPTION

This model is a two-layer wooden box. Insulation is packed between the layers. The insulation should be at least 5cm (2") thick.

Lower air holes are drilled through the bottom of the boxes (and through spacer boards fitted in the insulation space for this purpose). Slots are cut in the upper edges of the sides of the box to provide upper air outlets. The dryer is supported about 15cm (6") above the ground on four legs (which also form the main corner members for the box) (see Figure 1).

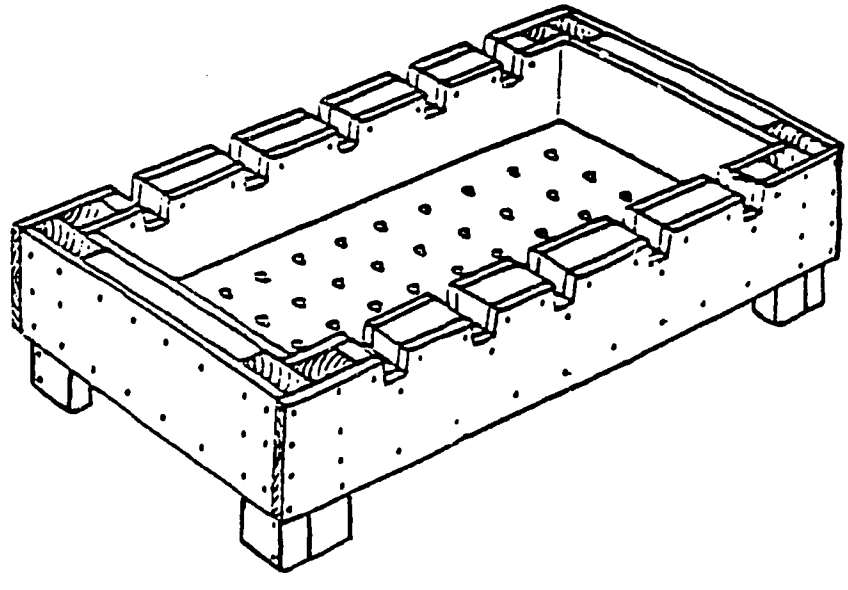

Figure 1. Model 1 Dryer

CONSTRUCT THE DRYER

- Check all measurements and markings on the wood before cutting.

- Cut sides and end pieces to the measurements shown in Figure 2. These can be one piece of wood or you can join narrower planks together to make a box about the right size.

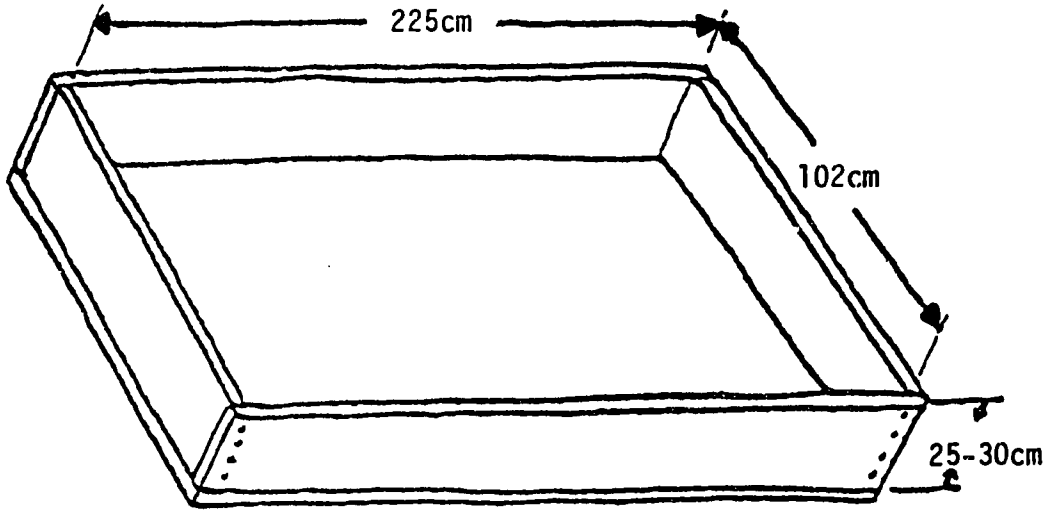

Figure 2. First Step of Model 1 Dryer

- Put the pieces together. Make sure the nails are completely hammered into the wood.

- Nail the box together to approximately the dimensions shown in Figure 2 above.

- Paint or stain the inside of the box with a dark color. A flat black is recommended. It is a good idea to put a wood preservative on the outside if you have it. For extra durability paint the outside with a dark gloss paint or marine varnish--if you can find them.

- Cut and nail the leg pieces to the corners as shown in Figure 3.

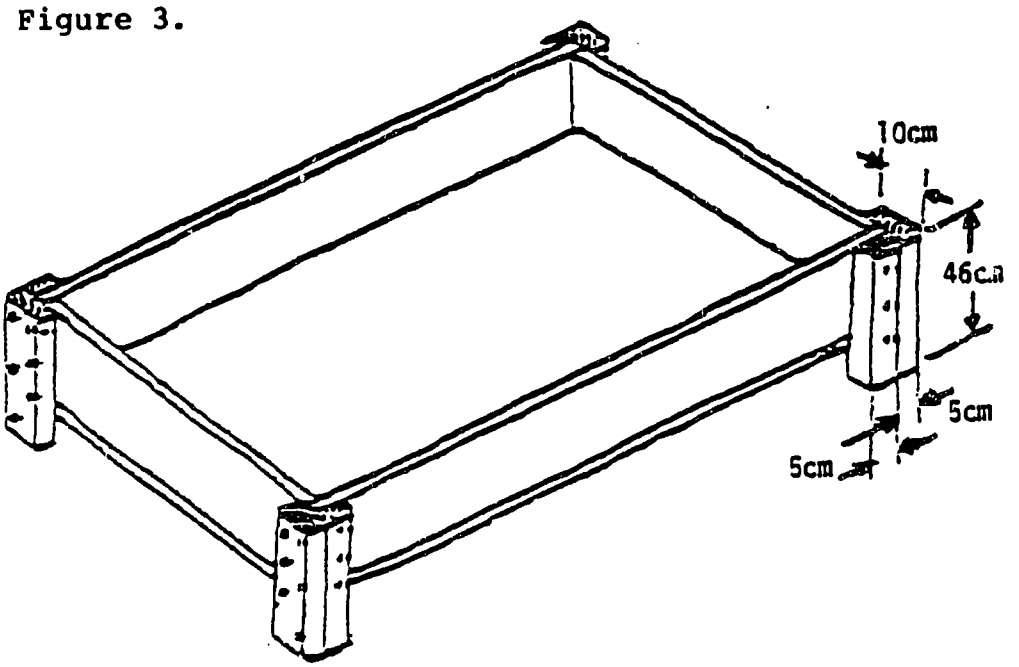

Figure 3. Leg Attachment

- Turn box upside down and nail spacer strips on bottom of box as shown in Figure 4.

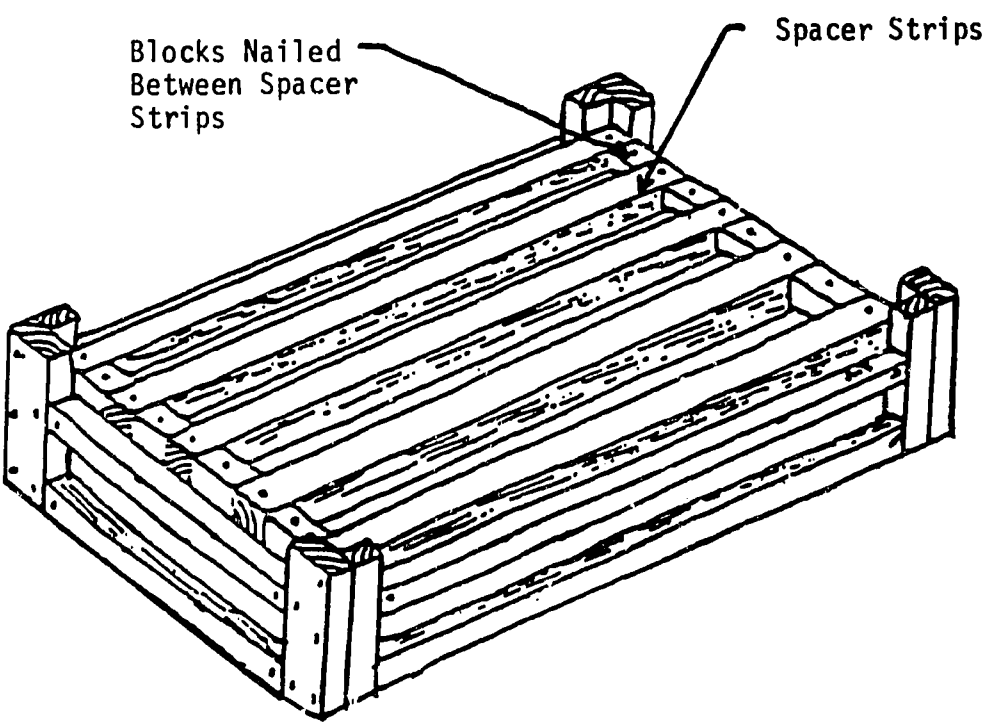

Figure 4. Spacer Strips

- Nail spacer strips on ends as shown.
- Toenail spacer strips in place on sides.
- Pack insulation between the spacer strips as shown in Figure 5 below.

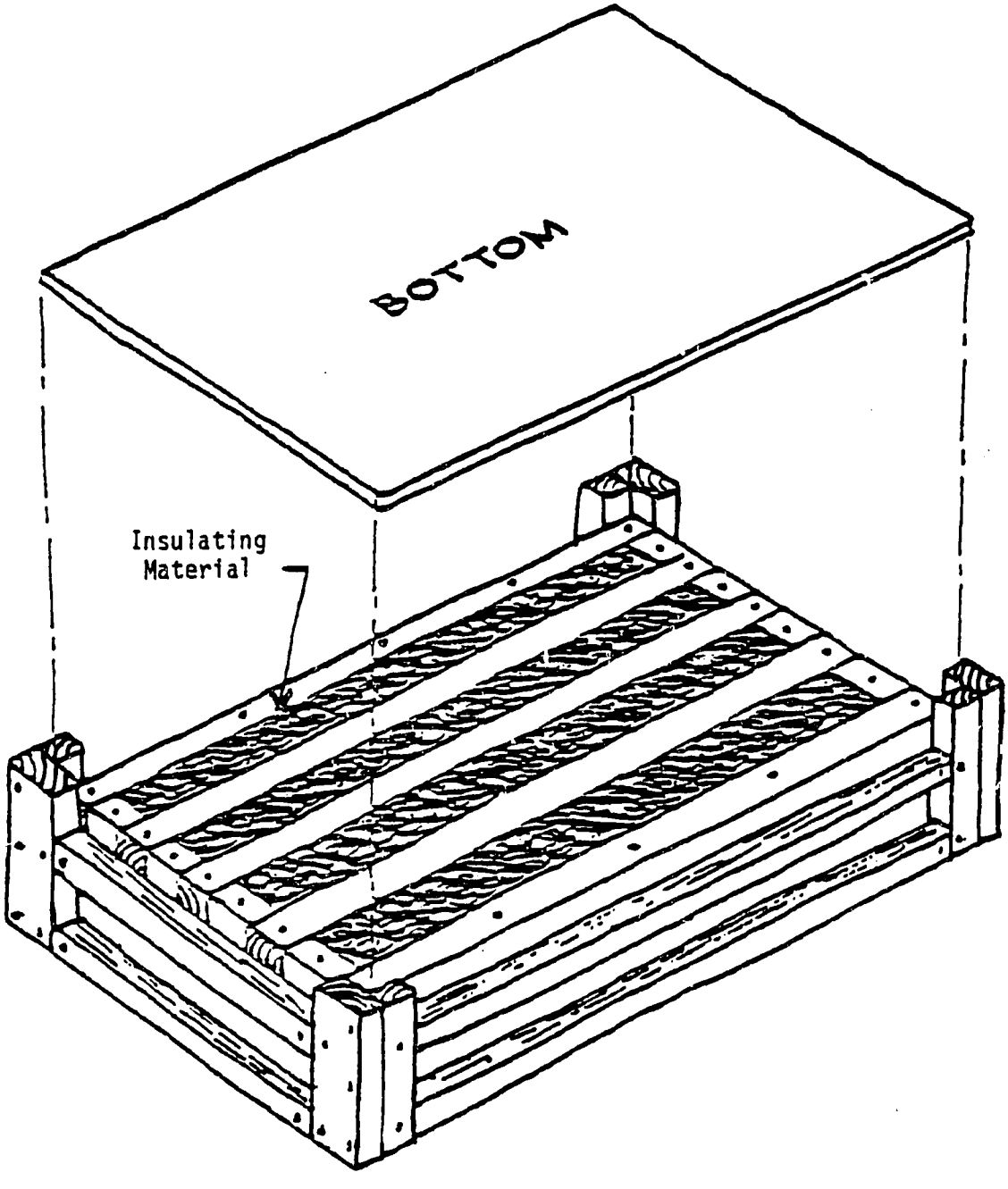

Figure 5. Insulation Placement

- Put bottom board(s) in place and nail around edges.
- Stand box on side and pack insulation between spacer strips as shown in Figure 6.

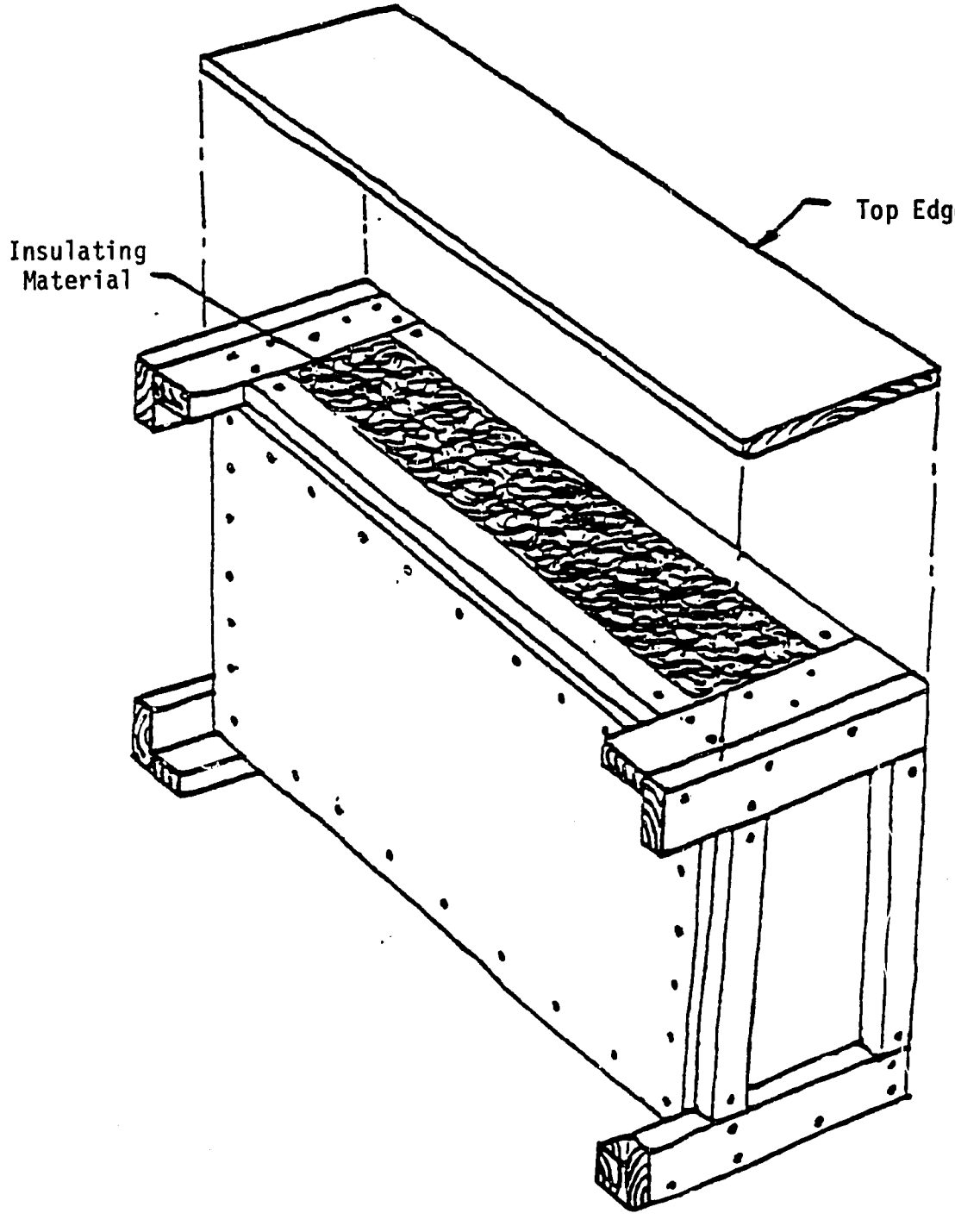

Figure 6. Insulate the Sides

- Put side board in place and nail along bottom and sides only. The top will be nailed after it is notched.

- Repeat for other side of box.

- Stand box on end and pack insulation between spacer strips as shown in Figure 7.

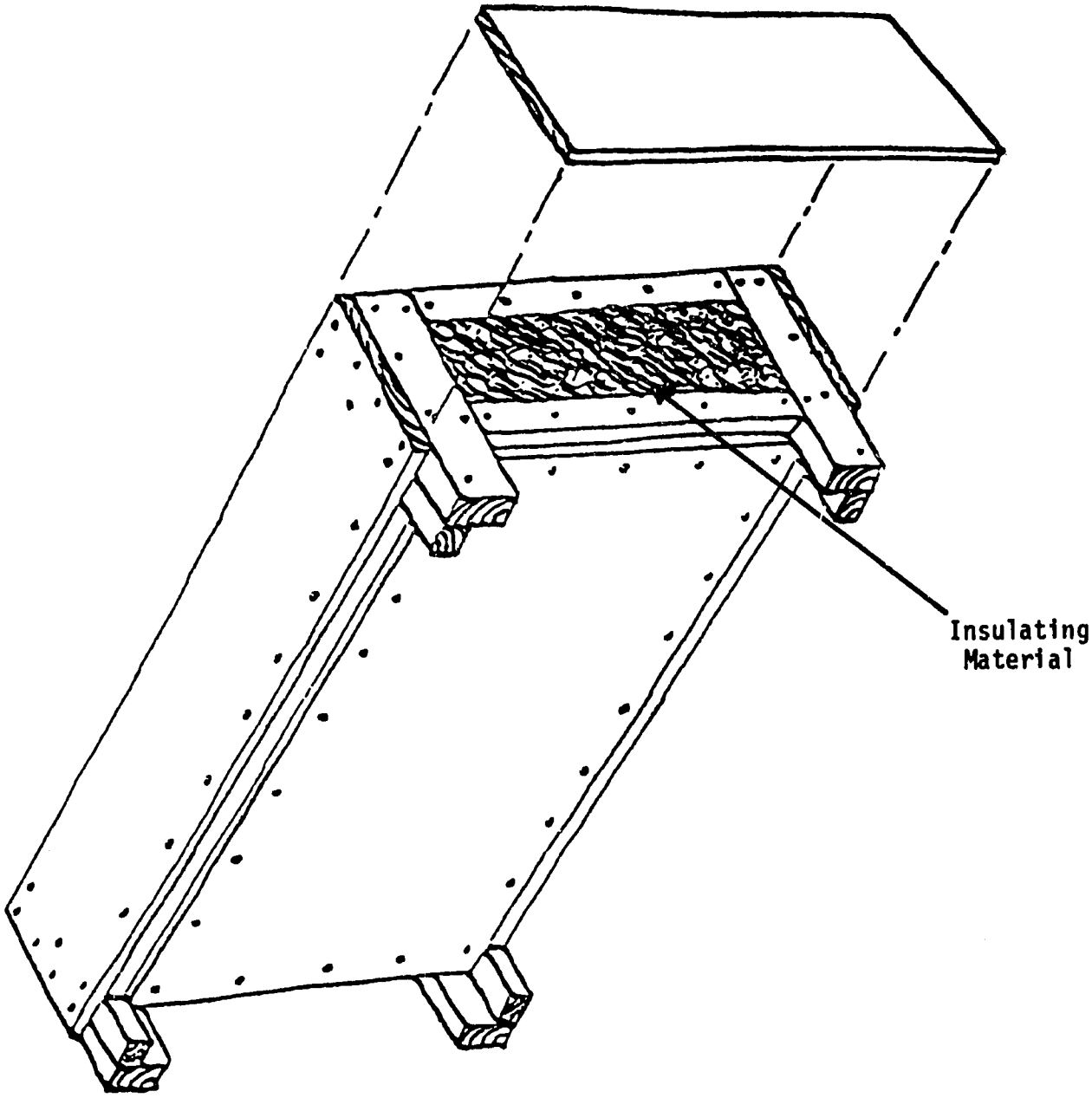

Figure 7. Insulate the Sides

- Put side board in place and nail on ends, bottom, and top edges.

- Repeat for other end.

- Set box upside down and drill holes through the bottom of the box as shown in Figure 8, making sure the holes are drilled through the spacer strips (see detail below).

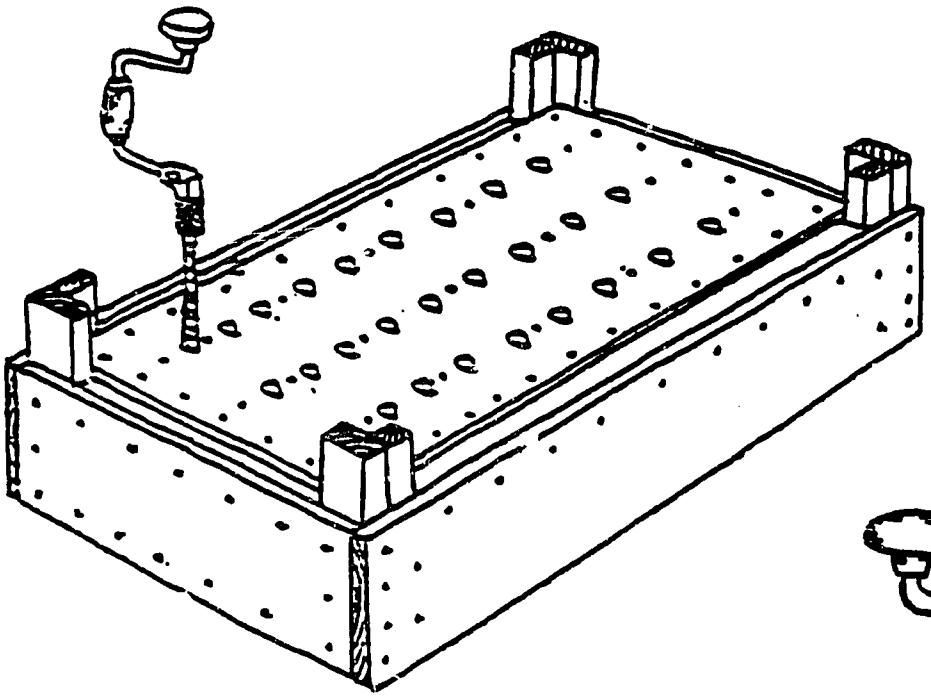

Figure 8. Drill Air Holes

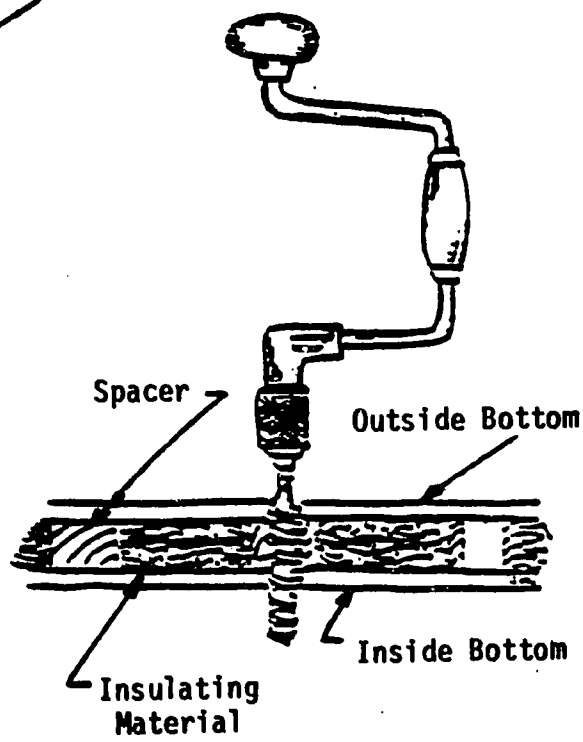

Detail

- When all holes are drilled, nail through the bottom into the spacers, nailing at least between every other hole (see Figure 8).

CUT AIR OUTLETS--Three different ways

- Mark the position of the air outlet slots on the upper sides.

- Cut out the slots in any one of the three ways shown in Figure 9.

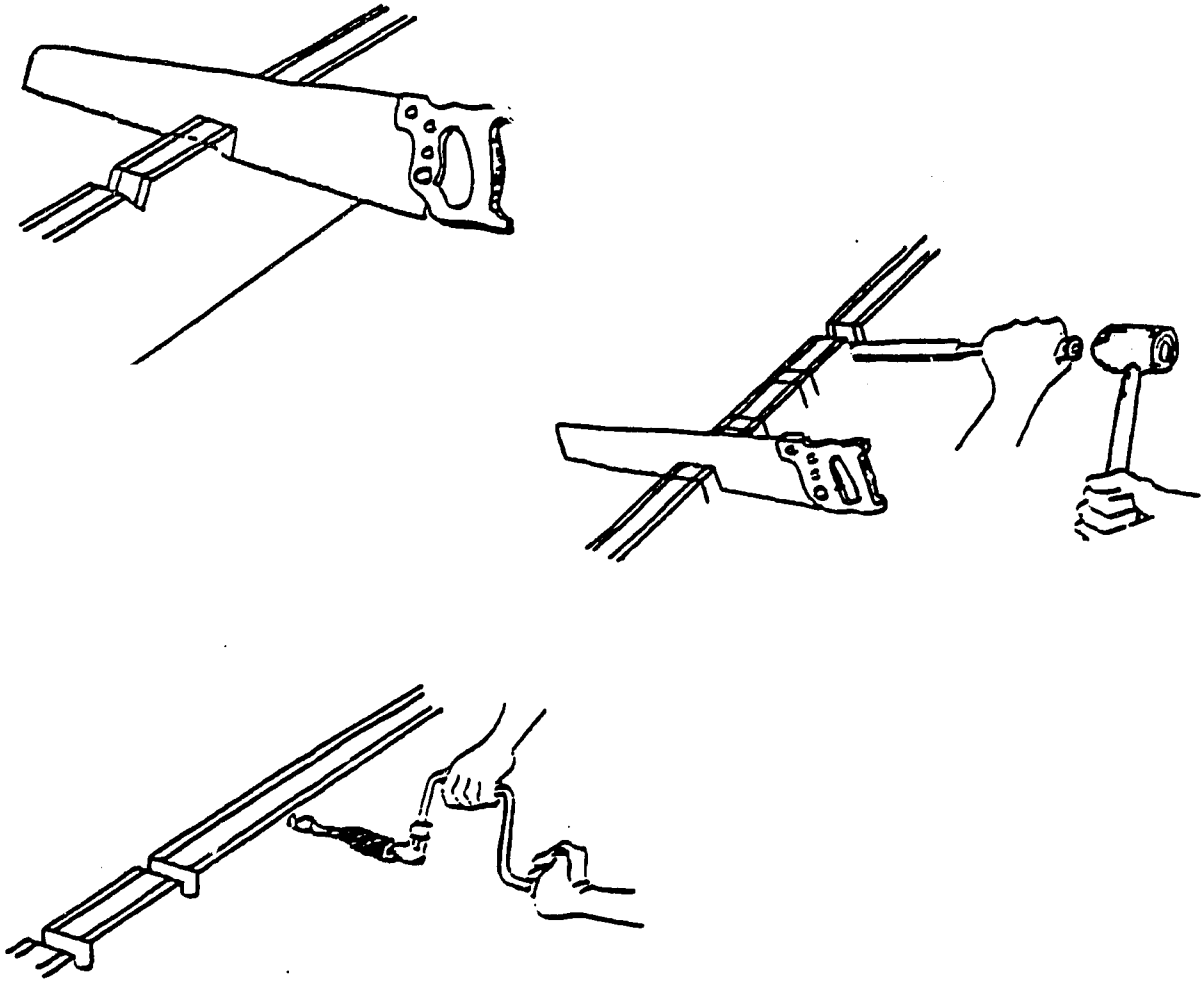

Figure 9. Three Methods to Cut Air Outlets

- When two or more boards must be used to make up a side or bottom, the two joining edges should be coated with gum, pitch, putty, roofing cement, or caulking compound before they are nailed. A thin board called a batten is tacked over the cracks between the boards (see Figure 10). Smearing the underside of the batten with caulking material before tacking it in place will help to keep the boards weathertight.

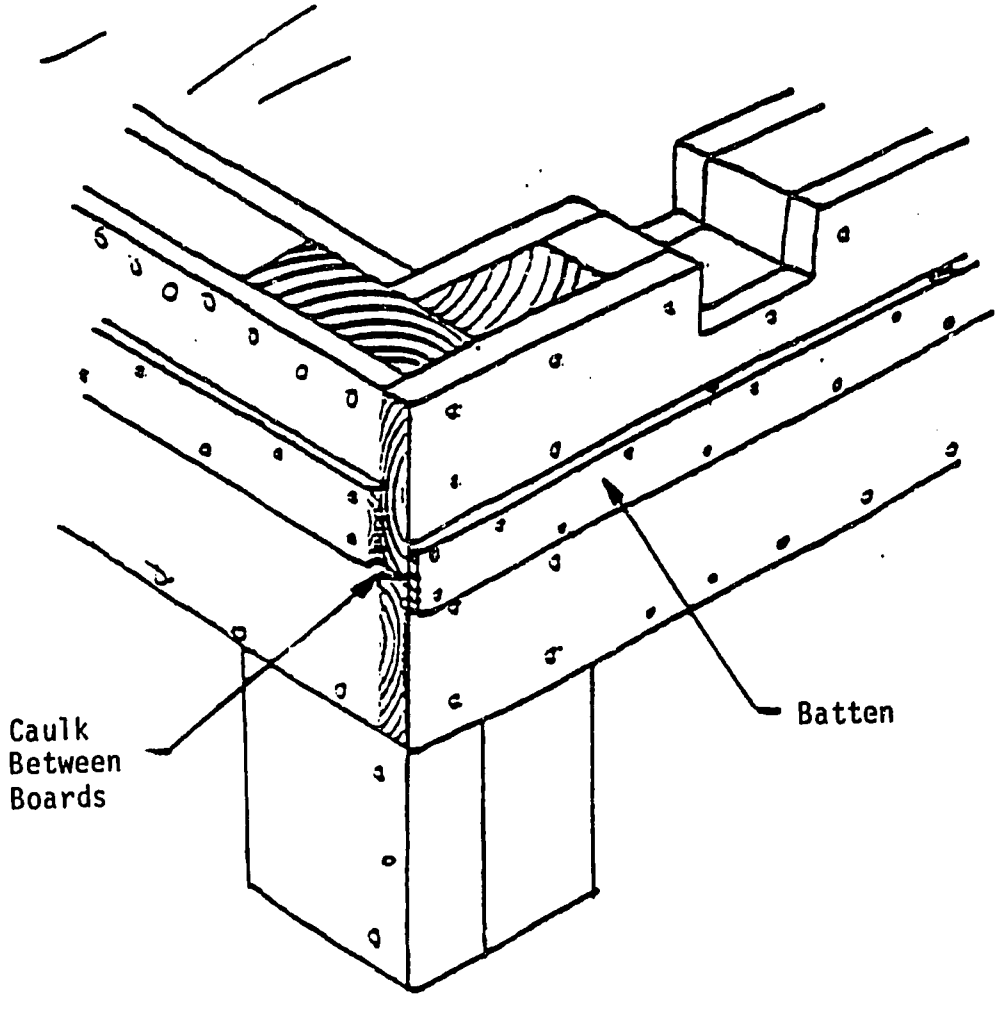

Figure 10. Batten Placement

- Strengthen the top edge of the sides of the box by nailing through all three layers--outside board, spacer strips, and inside board.

CONSTRUCT THE COVER (For Models 1 and 2 Dryers)

The same cover is used for both dryers. It consists of a rectangular wooden frame with a central ridge piece (see Figure 11). It is covered with a double layer of polyethylene film.

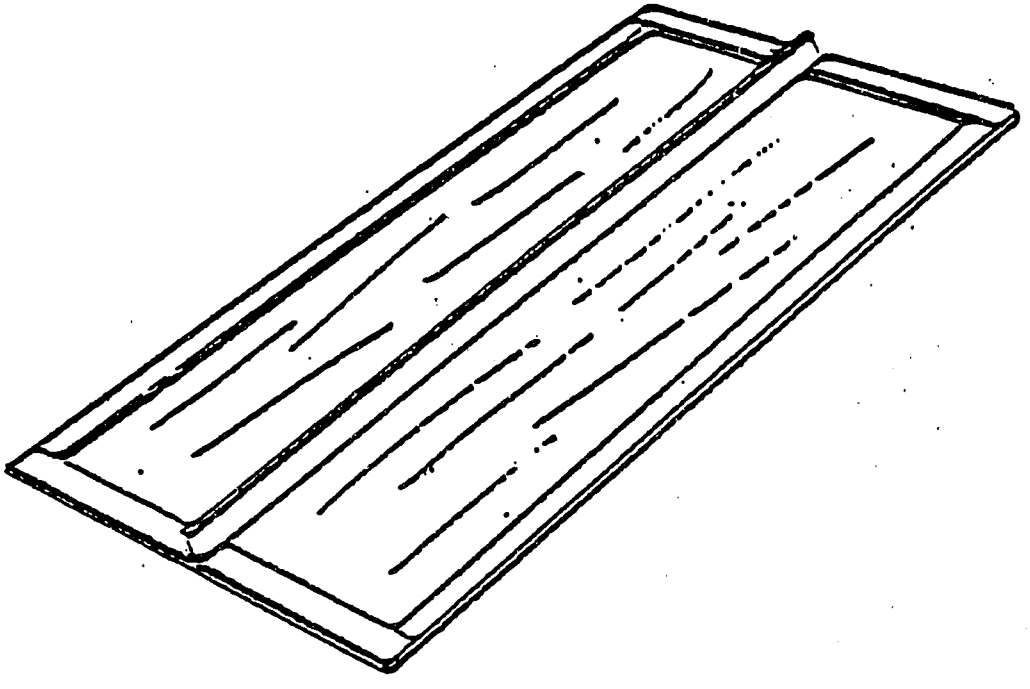

Figure 11. Dryer Cover

Make the frame so that its length and width are each 8cm (3") greater than the box to be covered. The cover will overlap the dryer box by about 4cm (1.5") on each side.

Make the Frame

- Cut the pieces for the frame to the right lengths.
- Put them together as shown in Figure 12.

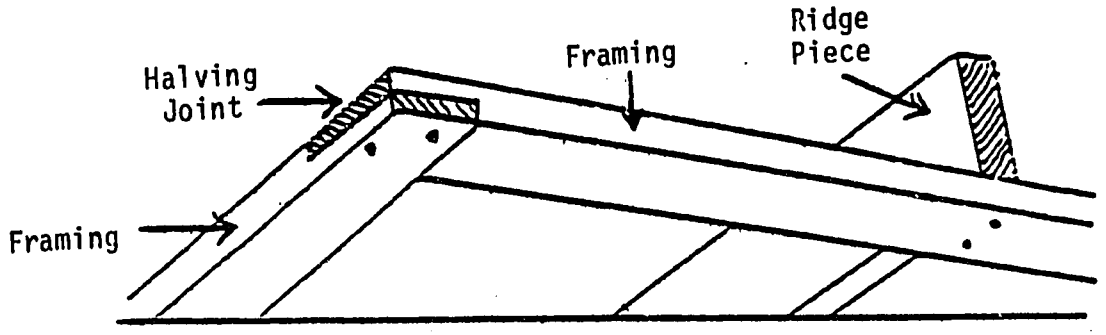

Figure 12. Frame for Cover

- Place the completed frame in the hot sun for two hours before putting on the plastic.

Put the Lower Plastic Sheet on the Frame

- Put the cover on while the wood is still warm and at a time when humidity is low. These precautions are necessary to prevent condensation (fogging) between the layers of polyethylene.

- Cut a piece of plastic for covering the lower side of the frame so that it is 8cm (3") wider and 8cm (3") longer than the frame.

- Turn the frame upside down and lay the plastic sheet in place. Fold one side of the polyethylene back on itself to form a triple layer seam 2cm (3/4") wide (see Figure 13).

Figure 13. Polyethylene Seam

- Start at the middle of the frame and work toward both ends. Stretch the plastic lightly but firmly lengthwise. Tack or

staple through the seams at 8cm (3") intervals to fasten this edge of the polyethylene to the frame. DO NOT OVER-STRETCH THE PLASTIC. POLYETHYLENE WILL "GIVE" AND DISTORT IF FINGERTIPS ARE DUG INTO IT. SUCH DISTORTED AREAS ARE LIKELY TO BREAK THROUGH DURING USE. IT IS BETTER THAT POLYETHYLENE BE SLIGHTLY LOOSE RATHER THAN OVERSTRETCHED.

- Repeat this process at the other side of the frame. Stretch the polyethylene across the frame while tacking or stapling.

- Fold similar seams at each end. Tack the ends of the sheet to the frame. Tuck the plastic neatly at each corner. Fasten firmly in place.

Put the Upper Plastic Sheet on the Frame

- Cut a piece of polyethylene sheet for covering the upper side. This sheet, when placed over the frame, should be 10cm (4") wider and 10cm (4") longer than the frame. Turn the frame upside down and, making a triple fold seam as before, tack or staple one edge to one side of the frame so that the seam overlaps the triple seam of the lower sheet (see Figure 14).

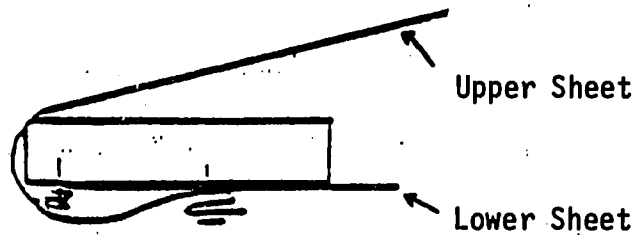

Figure 14. Polyethylene Seam of Upper Sheet

- Stretch the polyethylene over the ridge and around to the lower edge of the side member. Make a folded seam and tack or staple in place as before.

- Stretch the polyethylene over one end of the frame. Fold and tack as before, cutting away any extra material resulting from the slope from ridge to side member. Tuck the corners of the sheet in neatly, and tack firmly in place.

- Repeat for the other end of the frame.

Attach the Cover to the Dryer

- The cover does not weigh much and may blow off the dryer even in a light wind. The cover can be kept on by fastening hooks of stiff wire to each corner of the cover and swinging these hooks into place around nails or pegs fixed in the sides of the dryer.

- Or, fasten lengths of strong twine or cord to one side of the dryer, draw them tightly across the cover, and tie them to nails or pegs on the other side.

CONSTRUCT THE DRYING TRAYS (For Models 1 and 2)

The drying tray is a simple wooden frame with fine wire mesh stapled to its underside (see Figure 15). Scrap wood may be used, but it should be sturdy enough to hold the weight of the grain. A good size to use is 2cm X 7.5cm (3/4" X 3") or 2cm X 10cm (3/4" X 4").

Two support runners [2cm X 2cm (3/4" X 3/4")] are nailed to the underside (over the edge of the wire mesh). A third support runner in the center may be necessary to prevent the mesh from sagging. Two small pieces of wood may be tacked over the edges of the wire mesh to hold it in place at the ends. However,

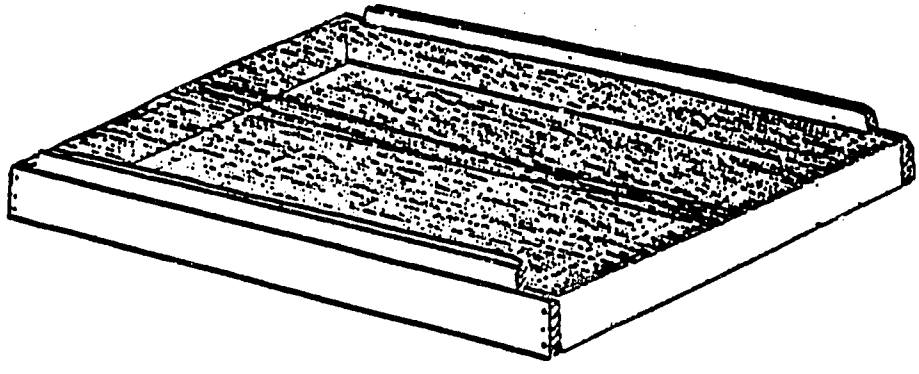

Figure 15. Drying Tray

folding the edge of the mesh over itself before stapling may be all that is needed.

Make two trays, each slightly smaller than 1m X 1m (39" X 39") so that they will fit the dryer box easily and allow handling room. Two trays are easier to manage than one large tray. Also, using two trays means that grains at two different moisture levels can be dried at the same time.

MODEL 2--DESCRIPTION

This dryer is also 1m X 2m (39" X 78"); but it is not like the Model 1 solar dryer. It is built on a permanent location and is made with clay bricks, or similar material (see Figure 16). Bricks composed of local earth and cement and compressed by a CINVA-Ram work very well. If hollow bricks are used, the hollows should be packed with dried grass, coir fibre, or other insulating material.

CHOOSE A SITE

A good place for the solar dryer will be:

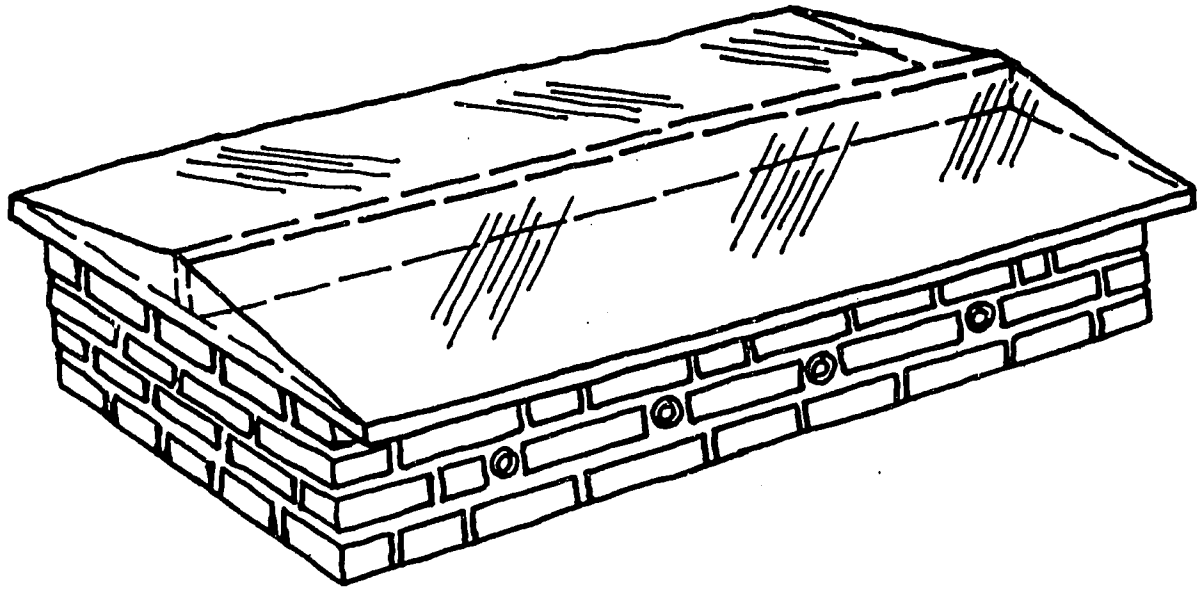

Figure 16. Model 2 Dryer

- High ground that is flat and level. Make sure the location is well drained.
- Out in the open--not shaded by trees or buildings.
- Exposed to the prevailing wind. The end of the dryer should be facing the prevailing wind.

PREPARE THE SITE

- Prepare a floor of hard-packed earth or concrete.
- Mark out dryer size and begin by building up the corner bricks (see Figure 17).
- Fill in the first layer of bricks between the corners.

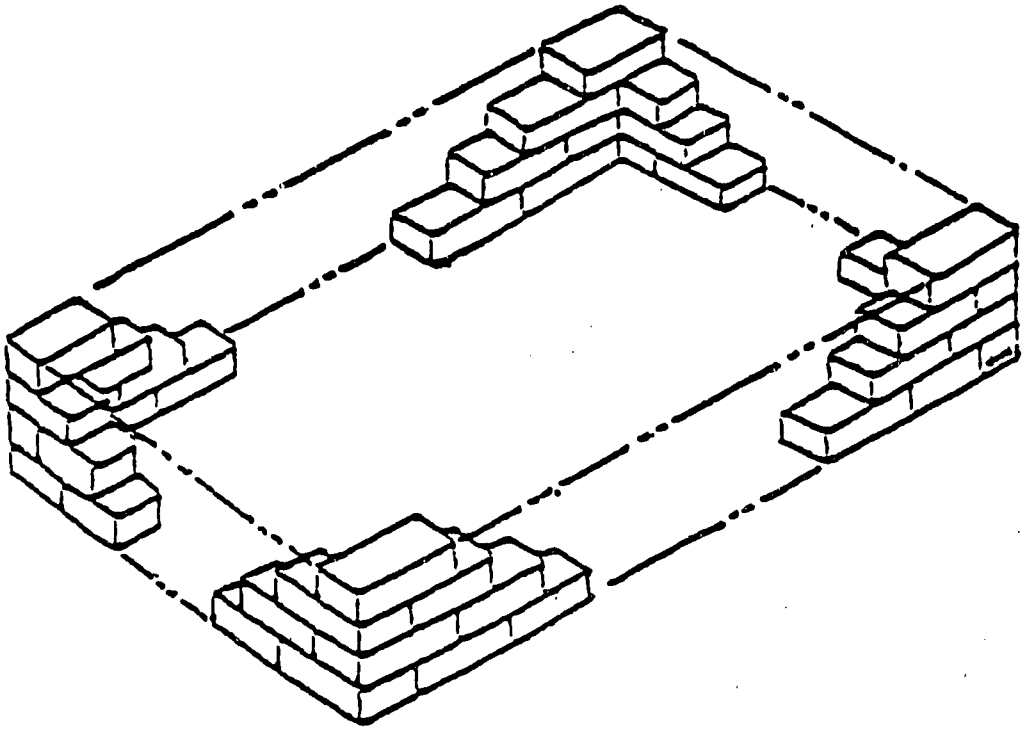

Figure 17. Build Up Corners

PREPARE BAMBOO PIPES

- Choose bamboo of even thickness with as few joints as possible.
- Cut bamboo to the same length as the outside width of the dryer.
- Split the lengths of bamboo with a machete, axe, or large knife (as shown in Figure 18).

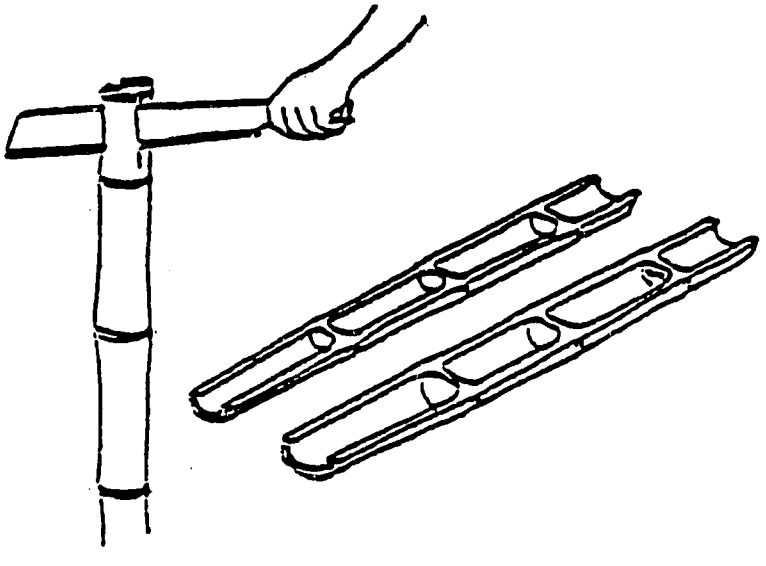

Figure 18. Split The Bamboo

- Use a half-round gouge or small chisel to cut out material at joints after the bamboo has been split (see Figure 19).

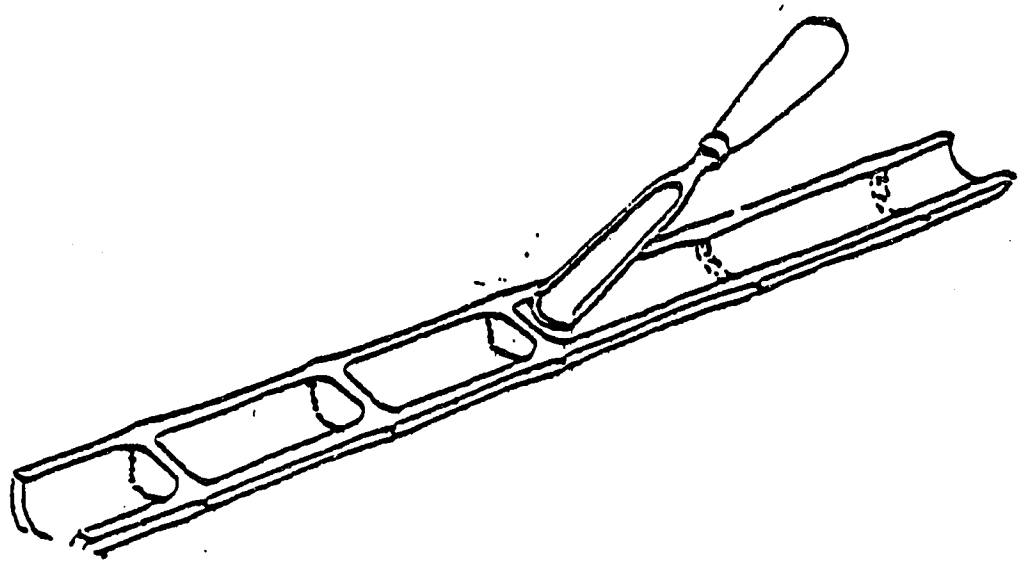

Figure 19. Chisel Out Joints

- Cut holes, about 4cm (1-1/2") in diameter in the top half (only) of each pipe. Holes can be made by using one of the methods shown in Figure 20.

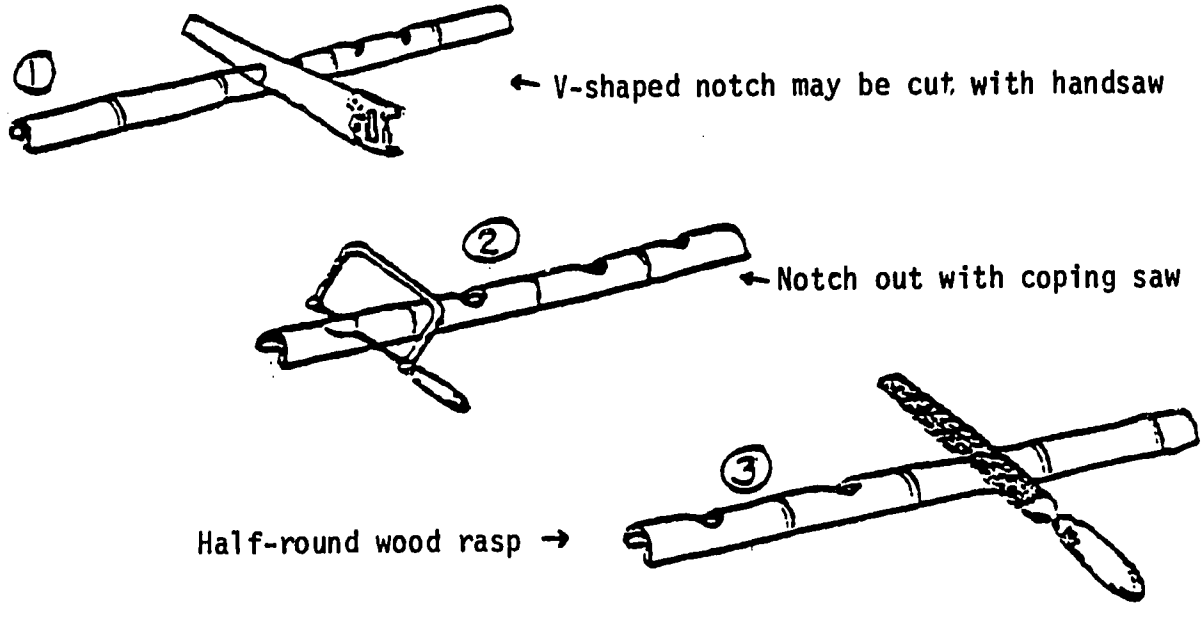

Figure 20. Cut Holes in Bamboo

- Tie the two halves of the bamboo lengths together with cord or wire as shown in Figure 21.

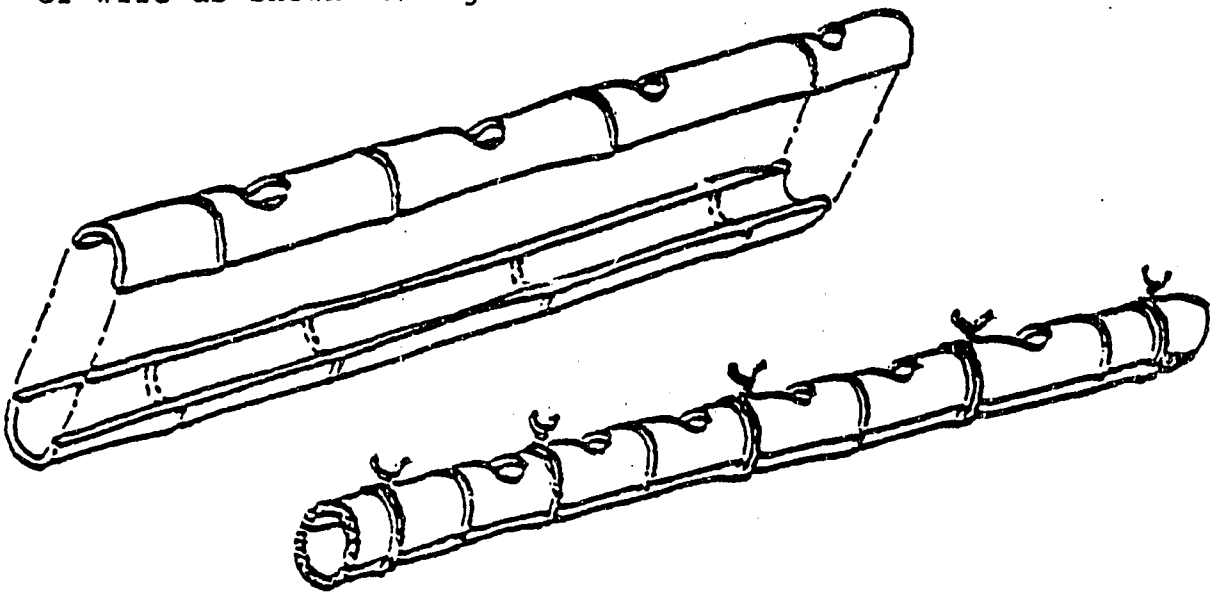

Figure 21. Tie Together

FINISH THE WALLS

- Place the bamboo pipes, holes up, in position in the second layer of bricks (see Figure 22). Cut the bricks as necessary to allow a smooth fit for the pipes.

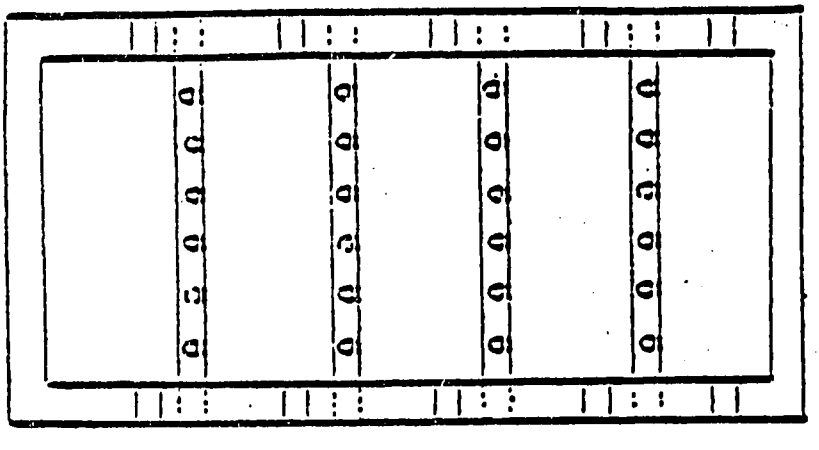

Figure 22. Top View

- Put down the third layer of bricks.

- Pack the holes around the bamboo with mortar or clay. Be sure the pipe openings remain clear.

- Put down the top layer of bricks. Leave 2.5cm (1") gaps as air outlets spaced along the two sides (see Figure 23).

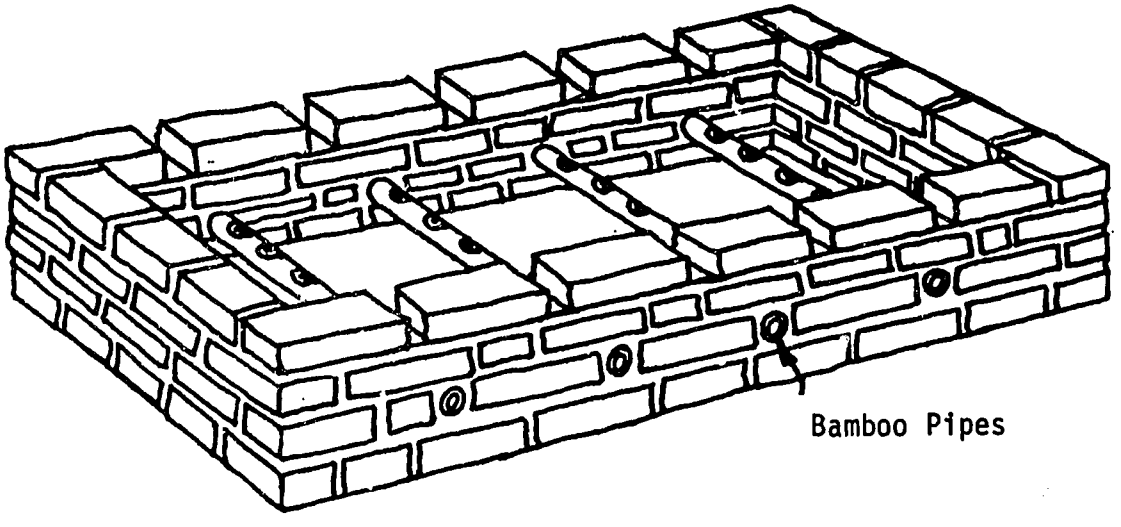

Figure 23. Lay Top Layer of Bricks

- Dig a drainage trench around the dryer to protect it from heavy rain. The trench should be 23-30cm (9-12") wide and 23-30cm (9-12") deep.

PAINT THE INSIDE

- When the mortar is thoroughly dry, paint the inside of the dryer a dark color. Charcoal mixed with clay and water makes a good coating.

CONSTRUCT COVER AND DRYING TRAYS

Follow the directions on pages 20 through 25 for Model 1 making any necessary adjustments if the overall size is different.

MODIFICATION OF MODEL 2

A Dual-Purpose Solar/Fuel-Heated Dryer

It is possible to build dryers that work on solar heat most of the time, but can, if necessary, be artificially heated during periods of heavy clouding or rain.

A modification of the Model 2 dryer allows for this dual purpose operation. A firebox of brick, clay, or a section of an oil drum is built at one end. A metal flue carries the heat from the firebox the length of the dryer (see Figure 24).

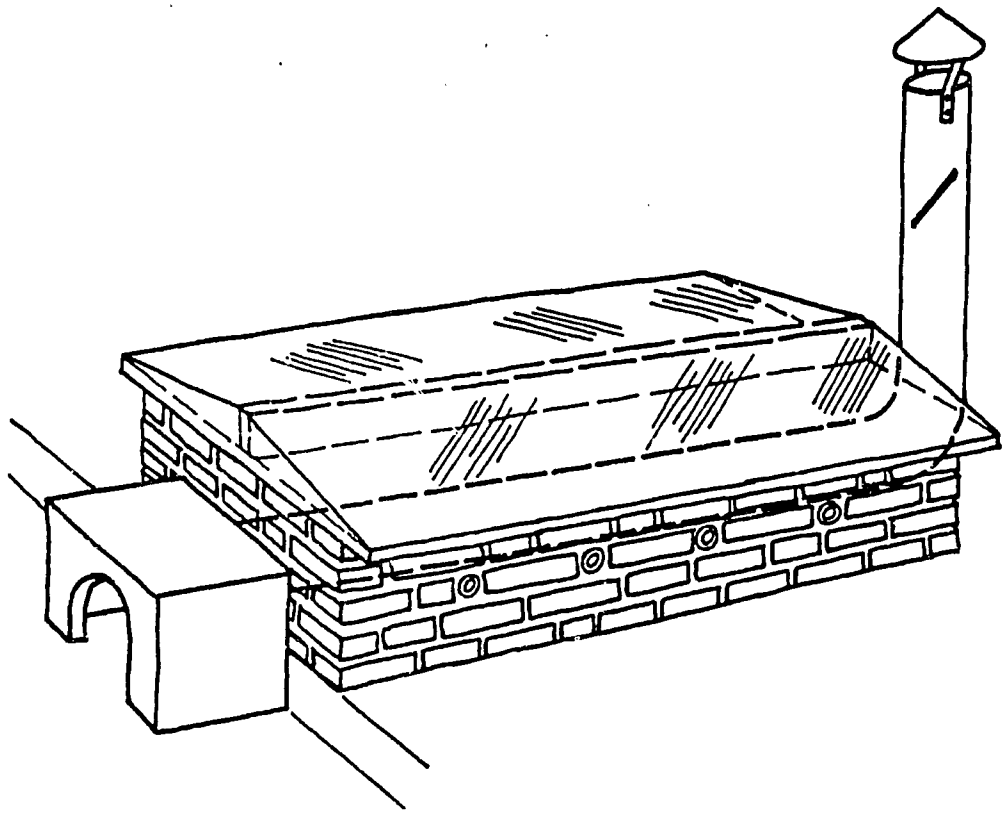

Figure 24. Model 2 Dryer With Firebox

Either one large 11cm (4") diameter pipe or a number of smaller pipes can be used. When using smaller pipes, difficulties in constructing a manifold may arise. But it may be possible to adapt exhaust manifolds from an old gasoline or diesel engine for this purpose.

The change will require increasing the height of the dryer wall by about 7.6cm (3") (the thickness of one brick). The bamboo pipes are then layed in the third layer of brick.

IF THE DRYER IS TO BE USED IN THIS WAY, THE DECISION SHOULD BE MADE BEFORE CONSTRUCTION BEGINS.

The base of the firebox must be at a lower level than the dryer. Make sure that this area is protected from any flooding which may occur during heavy rains.

The flue running through the dryer should slope upwards towards the chimney to assist draught (see Figure 25).

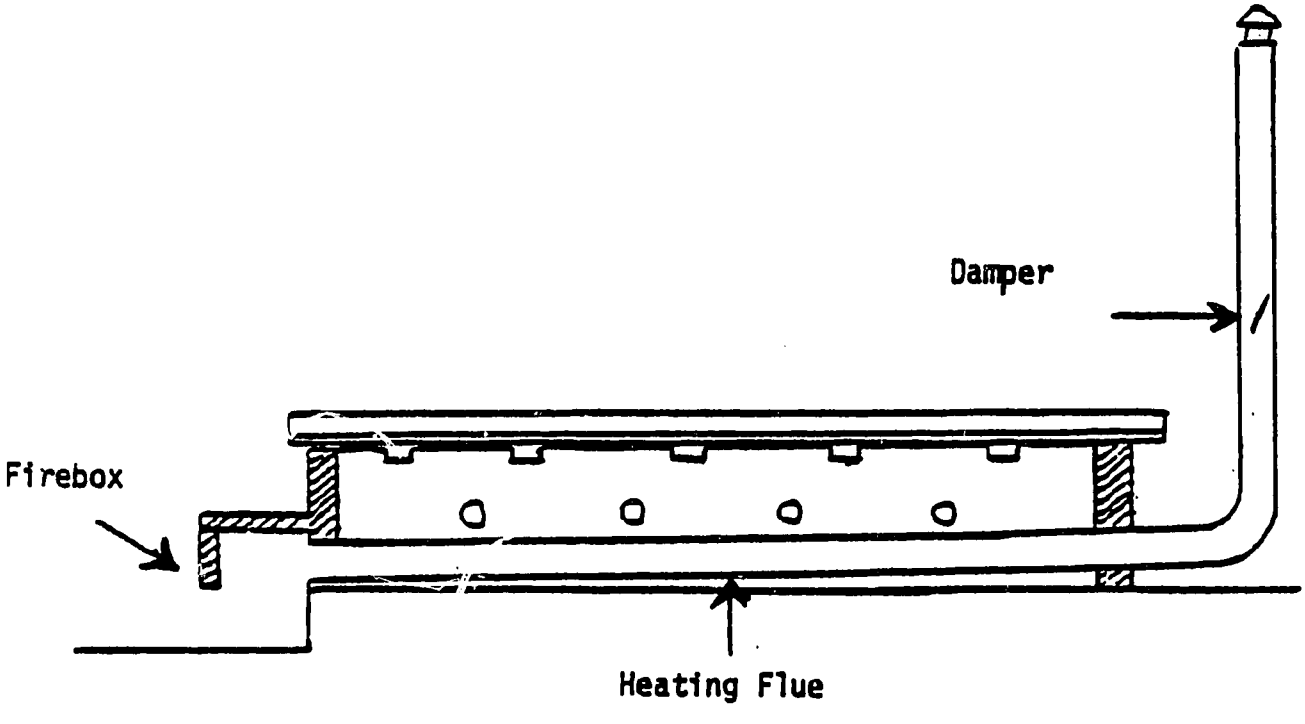

Figure 25. Flue

When using artificial heat, the movement of air through the dryer by convection will operate as it does when solar heat is being used. However, depending upon the heat given off by the fuel being used, it may be necessary to close off more of the upper ventilation ports.

CAUTION: Make sure that the part of the flue pipe passing through the dryer is smokeproof. If it is not smokeproof, smoke will flavor the foods being dried. A damper should also be placed in the chimney. This damper must be kept closed when sun-drying is being carried out, or the flue pipe may exert a cooling effect.

Make sure to site this modification so that the firebox end faces into the prevailing wind. This will assist draught through the flue, and will also ensure that any sparks from the chimney are carried away from the polyethylene cover.

V. OPERATION AND MAINTENANCE

Start drying as early as possible in the day to get maximum exposure to the sun. Once material to be dried has been placed in the dryer and the cover put into position, do not lift the cover until drying is completed for the day. Taking the cover off to check the contents will allow a lot of heat to leave the dryer.

CLEANLINESS

Brush the dryer out daily to get out dust and to remove any pieces of dried material spilled from the drying trays.

Keep the drying trays clean; wash them often.

TEMPERATURE CONTROL

Control the temperature inside the dryer by opening or closing the upper air outlets. Temperature may be measured by putting a thermometer in one of the upper air outlets. When doing this, shade the thermometer from direct sunlight by inserting a card beneath the cover. Temperatures measured in this way will be the maximum (not necessarily the average) internal temperature.

Or, temperatures at the level of the drying material may be measured by drilling a hole through the side of the dryer and inserting a thermometer. Again, make sure that the bulb is shaded from direct sunlight.

Closing the upper ventilation outlets will increase internal temperatures. However, if moisture begins to collect inside the dryer, you must start opening the outlets.

In cases where opening all the upper outlets still results in temperatures which are too high for the material being dried, additional outlets should be cut in the upper edges of the sides.

SHADE DRYING

Some materials, particularly green vegetables, carrots, plantain and some varieties of sweet potato, may lose color and vitamin A during direct exposure to sunlight. For these materials, shade drying is useful (some loss of color and vitamin A will still occur).

To do shade drying, fit sheets of thin metal immediately below the cover. Paint the metal (galvanized sheet or beaten-out tin containers) black on both sides. The size of the metal sheet should be just less than the internal length and width of the dryer. Support the sheet on nails driven into the inner sides and ends of the dryer. Put the nails in not more than a half inch below the upper edges of the sides.

Make sure the sheets do not touch the lower side of the polyethylene cover (otherwise their heat may cause it to melt). But the sheets should be high enough so that hot air from beneath the sheet can still escape through the upper air outlets.

When fitted properly, as described above, these sheets will send almost all of the heat they receive to the air inside the dryer, and the internal temperatures are similar to those made by sunlight. Use of metal shading sheets can, in fact, assist drying, since their presence encourages more effective convection air movement through the dryer.

FOGGING

If fogging occurs during use, withdraw tacks or staples from a short length at each end of the cover, open up the polyethylene

to allow moisture to escape while the dryer is in operation, and then refasten the polyethylene in place.

"STORAGE" HEATING

A simple modification to either the Model 1 or Model 2 dryers, which will enhance efficiency of drying during periods of intermittent clouding or rain, is the placing of a layer of dark-colored (or black-painted) rough-surfaced stones in the bottom of the dryer. These stones should be egg-sized or slightly larger.

During periods of sunshine, the stones will become heated. Then when the sun is covered by clouds, the stones maintain the internal temperature by giving up heat to the air.

VI. FURTHER INFORMATION RESOURCES

Bands, C.H. Solar Drying of Timber--A Development Study. 1969. Appendix by L.J. Heyl. Timber Research Unit, CSIR, Pretoria, South Africa.

Buelow, F.H. "Drying Grain with Solar Heated Air," Quarterly Bulletin, Vol. 41, #2, November 1958, pp. 421-429. Michigan Agr. Exp. Sta., Michigan State University, East Lansing, Michigan USA. Some parts are fairly technical; contains results of author's experiments with solar-heated grain-drying buildings. Has some useful tables, also designs for a prototype solar grain-drying building. Has some useful suggestions.

Buelow, Fred. "Drying Crops with Solar Heated Air." UN Conference on New Sources of Energy, April 1961. UNIPUB, Box 433, Murray Hill Street, New York, New York 10016 USA. A fairly technical treatise on solar crop drying in general. Full of mathematical formulas for determining size of the dryer, roofing materials, heat flow, etc. May be of some value to those who have some background in math or engineering.

Campbell, J.K. Some Patents Relating to Solar Drying. April 1975. Available from VITA.

_____. Some Patents Relating to Windmills and Solar Drying. April 1975. Available from VITA.

Chancellor, William J. "An Experiment on Sun Drying of Padi," The Malaysian Agricultural Journal, Vol. 45, No. 1, January 1965, pp. 65-75. Ministry of Agriculture and Lands, Swettenham Road, Kualadumpur, Malaysia.

Previous Page Blank

Chudnoff, M., Maldonado, E.D., and Goytia, E. Solar Drying of Tropical Hardwoods. Forest Service Research Paper ITF-2, April 1966. USDA Forest Service, Institute of Tropical Forestry, Rio Piedras, Puerto Rico.

Clark, C. Stuart. Technical Feasibility and Acceptability of Sun Dried Vegetables in Bangladesh. February 1976. Christian Org. for Relief and Rehab., PO Box 994, Dacca-2, Bangladesh.

Fargeas, Daniel. Solar Dryer. March 1974. Vingrau, 66600 Rivesaltes, France.

Frampton, Michael J. "Building a Solar Dryer," Countryside, Vol. 59, No. 8, p. 27, August 1975. Tri-County Newsletter, Haslett, Michigan 48840 USA.

Harler, Curt. "He Dries Hay on 'Sun Power'," Pennsylvania Farmer. January 12, 1974, (Paul Zimmerman's hay dryer). Available from VITA.

Lawant, T.A. Description & Construction Cost Analysis of a Solar Agricultural Maize Drying System. December 1966. Brace MacDonald College of McGill University, Ste. Anne de Bellevue, Quebec, Canada.

_____. "A Solar-Cabinet Dryer," Solar Energy, Vol. X, No. 4, October-December 1966, pp. 158-164. Brace MacDonald College of McGill University, Ste. Anne de Bellevue, Quebec, Canada.

Lipper, Ralph I., and Davis, Chester P. Jr. Solar Energy for Crop Conditioning.

Lof, George O.G. "Solar Energy for the Drying of Solids," Solar Energy, Vol. 6, No. 4, 1962, pp. 122-128. Pergamon Press, Inc., Maxwell House, Fairview Park, Elmsford, New York 10523 USA.

Lukes, Thomas. Research on the Application of Solar Energy to the Food Drying Industry, Final Report, December 1975, 102 pp. California Polytechnic State University, with support of National Science Foundation, Grant #ERT-7419063.

Maldonado, Edwin D. "Solar Radiation Used to Dry Mahogany Lumber in Puerto Rico," Tropical Forest Notes, No. 14, December 1962. Institute of Tropical Forestry, Rio Piedras, Puerto Rico.

Maldonado, Edwin D., and Peck, Edward C. "Drying by Solar Radiation in Puerto Rico," Forest Products Journal, October 1962, pp. 487-488. Forest Products Research Society, 2801 Marshall Court, Madison, Wisconsin 53705 USA.

Mark, E.M., and Phaff, H.J. Sun-Drying Fruits, Circular 392, July, 1949. California Agr. Exp. Station, University of California, Berkeley-4, California USA.

Mowry, George. Plastic Solar Air Heaters for Agricultural Drying of Grains. USDA, Kansas State University, Manhattan, Kansas 66504 USA.

Petersen, William R. Solar Heat for Drying Shelled Corn. ASAE Paper #RIC73-302, 1973. Am. Soc. of Agr. Eng., St. Joseph, Michigan 49085 USA. Presents both theoretical and practical considerations for building a solar crop dryer. Contains some useful tables and charts, also sample procedures and designs, not totally comprehensive but surprisingly useful for an academic paper.

USDA. Sun Dry Your Fruits and Vegetables. Federal Extension Service, 1958. A step-by-step illustrated guide for drying fruits and vegetables. Includes sections on sulphuring fruit, storage, steaming vegetables, making dryers, and cooking with dried fruit. Also has a chart dealing with special procedures for different fruits and vegetables. Thoroughly comprehensive, this is one of the most useful pamphlets on the subject. Available from VITA.

US Department of Commerce, Technical Digest Service. "Use of a Solar Energy Unit in Concentrating Sugar Cane and Palm Juices," May 1961; digested from Journal of Scientific and Industrial Research, 1959. Available from VITA.

VITA. "Applications of Solar Energy for the Drying of Peanuts, Forage and Tobacco," Summary of FY 1975 Research Programs.

VITA. "How to Sun Dry Your Fruits," Village Technology Handbook, 1967. A highly practical, step-by-step guide for drying fruit. Includes a section on sulphuring, also has a chart of special procedures for specific fruits. Highly recommended.

VITA. "Solar Dryers," Small Farm Grain Storage, Vol. 1, 1977, pp. 95-126. Contains some general information on solar grain dryers, but is mostly highly detailed with profusely illustrated instructions for building different types of grain dryers. Includes both portable and fixed dryers, as well as a combination solar/fuel-heated dryer. A very useful work.

VITA. "Solar Drying of Soybeans," Teledyn Report, 2nd Quarter, 1976, p. 11.

von Leosecke, Harry W. "Sun-Drying and Dehydration of Figs," digested from Drying and Dehydrating of Foods, 1955; digested by Technical Digest Service, US Department of Commerce. Available from VITA.

Works, D.W., Williams, L.G., and Thacker, D.R. "Curing Alfalfa Hay with Forced Ventilation," Idaho Agricultural Research Progress Report No. 58, November 1961. Available from VITA.

VII. DICTIONARY OF TERMS

CAULK--To make something airtight or watertight by filling the seams with some material.

CAULKING COMPOUND--A substance used for caulking (see above).

CONDENSATION--The process of reducing a gas or vapor to a liquid or solid form.

DIA (DIAMETER)--A straight line passing completely through the center of a circle.

DRAUGHT (also DRAFT)--A current of air in any enclosed space, especially in a room, chimney, or stove.

FLUE--A passage or duct for air, gas, or the like; e.g., for smoke in a chimney.

INTERMITTENT--Alternately starting and stopping again.

LENGTHWISE--The measure of the greatest dimension of a plane or solid figure.

MANIFOLD--A chamber having several outlets through which a liquid or gas is distributed or gathered.

MARINE VARNISH--A preparation used to coat the wood of ships.

MODIFICATION--The act of changing something partially to meet specific needs.

NOTCH--An angular cut, indentation, or hollow in an object, surface, or edge.

POLYETHYLENE--A plastic ethylene compound of high molecular weight that is used chiefly for containers, electrical insulation, and packaging.

PORTABLE--Easily carried or moved.

PREVAILING WIND--The direction from which the wind generally blows at a given time.

SPACER STRIPS--Blocks of wood used to separate sections of the grain dryer so that air can blow through.

STATIONARY--Not moveable.

SUPPORT RUNNER--Wooden strips on the bottom of the drying trays to allow air to circulate under trays.

TOENAIL--In carpentry, a nail driven obliquely (at an angle) to fasten two pieces of wood together.

TRENCH--A deep furrow or ditch.

VENTILATION--The act of providing fresh or cool air.

WEATHERTIGHT--Secure against wind, rain, etc.

WIRE MESH--Metal wire woven together into an intertwined fabric, e.g. wire screen, poultry screen, hardware cloth.

VIII. CONVERSION TABLES

UNITS OF LENGTH

1 Mile	= 1760 Yards	= 5280 Feet
1 Kilometer	= 1000 Meters	= 0.6214 Mile
1 Mile	= 1.607 Kilometers	
1 Foot	= 0.3048 Meter	
1 Meter	= 3.2808 Feet	= 39.37 Inches
1 Inch	= 2.54 Centimeters	
1 Centimeter	= 0.3937 Inches	

UNITS OF AREA

1 Square Mile	= 640 Acres	= 2.5899 Square Kilometers
1 Square Kilometer	= 1,000,000 Square Meters	= 0.3861 Square Mile
1 Acre	= 43,560 Square Feet	
1 Square Foot	= 144 Square Inches	= 0.0929 Square Meter
1 Square Inch	= 6.452 Square Centimeters	
1 Square Meter	= 10.764 Square Feet	
1 Square Centimeter	= 0.155 Square Inch	

UNITS OF VOLUME

1.0 Cubic Foot	= 1728 Cubic Inches	= 7.48 US Gallons
1.0 British Imperial Gallon	= 1.2 US Gallons	
1.0 Cubic Meter	= 35.314 Cubic Feet	= 264.2 US Gallons
1.0 Liter	= 1000 Cubic Centimeters	= 0.2642 US Gallons

UNITS OF WEIGHT

1.0 Metric Ton	= 1000 Kilograms	= 2204.6 Pounds
1.0 Kilogram	= 1000 Grams	= 2.2046 Pounds
1.0 Short Ton	= 2000 Pounds	

UNITS OF PRESSURE

1.0 Pound per square inch	= 144 Pound per square foot
1.0 Pound per square inch	= 27.7 Inches of water*
1.0 Pound per square inch	= 2.31 Feet of water*
1.0 Pound per square inch	= 2.042 Inches of mercury*
1.0 Atmosphere	= 14.7 Pounds per square inch (PSI)
1.0 Atmosphere	= 33.95 Feet of water*
1.0 Foot of water = 0.433 PSI	= 62.355 Pounds per square foot
1.0 Kilogram per square centimeter	= 14.223 Pounds per square inch
1.0 Pound per square inch	= 0.0703 Kilogram per square centimeter

UNITS OF POWER

1.0 Horsepower (English)	= 746 Watt = 0.746 Kilowatt (KW)
1.0 Horsepower (English)	= 550 Foot pounds per second
1.0 Horsepower (English)	= 33,000 Foot pounds per minute
1.0 Kilowatt (KW) = 1000 Watt	= 1.34 Horsepoer (HP) English
1.0 Horsepower (English)	= 1.0139 Metric horsepower (cheval-vapeur)
1.0 Metric horsepower	= 75 Meter X Kilogram/Second
1.0 Metric horsepower	= 0.736 Kilowatt = 736 Watt

*At 62 degrees Fahrenheit (16.6 degrees Celsius).

APPENDIX I

DECISION MAKING WORKSHEET

If you are using this as a guideline for using the Solar Grain Dryer in a development effort, collect as much information as possible and if you need assistance with the project, write VITA. A report on your experiences and the uses of this manual will help VITA both improve the book and aid other similar efforts.

Volunteers in Technical Assistance
3706 Rhode Island Avenue
Mt. Rainier, Maryland 20822 USA

CURRENT USE AND AVAILABILITY

- Note current domestic and agricultural practices which might have potential for solar application.

- Document days of sunshine, seasonal changes, haze, cloud cover, etc. Another way of finding the information is to search out annual rainfall figures and work from there.

- Document current agricultural and domestic patterns, for example, types of food cooked, time of main meal, kinds of grains grown, moisture percent at which harvested, etc.

- Have solar technologies been introduced previously? If so, with what results?

- Are there other current practices which might be enhanced by improved use of solar energy--for example, salt production.

NEEDS AND RESOURCES

- Based on current methods and techniques, particularly in agriculture and transport, which areas seem most needful of attention?

- What are the characteristics of the problem? Is the local population aware of the problem/need?

- Has any local person, particularly someone in a position of authority, expressed the need or shown interest in solar power technology? If so, can someone be found to help the technology introduction process? Are there local officials who could be involved and tapped as resources?

- How will you get the community involved with the decision of which technology is appropriate for them?

- Are there projects and other efforts already underway to which a solar component might be added so that the ongoing project acts as a technical and even financial resource for the new effort? For example, if there is a post harvest grain loss project underway, could improved solar drying techniques be introduced in conjunction with the other effort?

- Is there a basis for a small scale business enterprise?

- Are materials and tools available locally for construction of technologies?

- What kinds of skills are available locally to assist with construction and maintenance? How much skill is necessary for construction and maintenance? Do you need to train people? Can you meet the following needs?

  - The project requires someone with experience in carpentry. Estimated labor time for full-time workers is:

    - 3 hours skilled labor (applicable only to heated dryer option)

    - 8 hours unskilled labor

  - If this is a part-time project, adjust the times accordingly.

- Do a cost estimate of the labor, parts, and materials needed.

- Would the technology require outside funding? Are local funding sources available to sponsor the effort? How will the project be funded?

- What is your schedule? Are you aware of holidays and planting or harvesting seasons which may affect timing?

- How will you arrange to spread knowledge and use of the technology?

IDENTIFY POTENTIAL

- Is there a choice to be made between a solar technology and another alternative energy technology? For example, is it more feasible to introduce a solar cooker or a wood conserving stove? Or is it important to do both on a demonstration basis? Likewise, it is necessary to weigh all the "costs" of solar grain drying versus an improved charcoal-fueled dryer.

- Under what conditions would it be useful to introduce a solar technology for demonstration purposes?

- If solar dryers and distillation units are feasible for local manufacture, would they be used? Assuming no "funding," could local people afford them? Are there ways, then, to make the solar technologies "pay for themselves?"

FINAL DECISION

- How was the final decision reached to go ahead with this technology? or, why was it decided against?

APPENDIX II

RECORD KEEPING WORKSHEET

CONSTRUCTION

Photographs of the construction process, as well as the finished result, are helpful. They add interest and detail that might be overlooked in the narrative.

A report on the construction process should include very specific information. This kind of detail can often be monitored most easily in charts (such as the one below).

CONSTRUCTION

Labor Account

		Hours Worked									
Name	Job	M	T	W	T	F	S	S	Total	Rate?	Pay?
1											
2											
3											
4											
5											
								Totals			

Materials Account

Item	Cost Per Item	# Items	Total Costs
1			
2			
3			
4			
5			
		Total Costs	

Some other things to record include:

- Specification of materials used in construction.
- Adaptations or changes made in design to fit local conditions.
- Equipment costs.
- Time spent in construction--include volunteer time as well as paid labor, full- and/or part-time.
- Problems--labor shortage, work stoppage, training difficulties, materials shortage, terrain, transport.

OPERATION

Keep log of operations for at least the first six weeks, then periodically for several days every few months. This log will vary with the technology, but should include full requirements, outputs, duration of operation, training of operators, etc. Include special problems that may come up--a damper that won't close, gear that won't catch, procedures that don't seem to make sense to workers, etc.

MAINTENANCE

Maintenance records enable keeping track of where breakdowns occur most frequently and may suggest areas for improvement or strengthening weakness in the design. Furthermore, these records will give a good idea of how well the project is working out by accurately recording how much of the time it is working and how often it breaks down. Routine maintenance records should be kept for a minimum of six months to one year after the project goes into operation.

MAINTENANCE

Labor Account

Name	Hours & Date	Repair Done	Also down time Rate?	Also down time Pay?
1				
2				
3				
4				
5				
		Totals (by week or month)		

Materials Account

Item	Cost	Reason Replaced	Date	Comments
1				
2				
3				
4				
5				
Totals (by week or month)				

SPECIAL COSTS

This category includes damage caused by weather, natural disasters, vandalism, etc. Pattern the records after the routine maintenance records. Describe for each separate incident:

- Cause and extent of damage.
- Labor costs of repair (like maintenance account).
- Material costs of repair (like maintenance account).
- Measures taken to prevent recurrence.

APPENDIX III

Brief History of the Grain Storage Program of the Agriculture Service of Benin and the US Peace Corps

It was in 1967 that the Agriculture Service of Benin under the Ministry of Rural Development first asked for US Peace Corps volunteers to assist it in implementing a new program of grain conservation at the farm level in southern Benin. Problems with grain storage had always been acute in Benin.

The vast majority of maize produced annually in Benin is grown in the southern half of the country where there is constantly high humidity and temperatures which foster rotting as well as the multiplication of maize-consuming insects. The traditional method of storage in southern Benin is in loosely-woven palm thatched granaries raised on wooden stilts. The only real protection against attack by rodents and insects is offered by the husk on each ear of maize, resulting in 30% average loss of the 300,000 tons approximate annual production. The estimated value of maize lost annually to the combined effects of insects, rodents, and rot is a minimum of 600,000,000 cfa (about $3 million).

The idea behind the original request was to introduce to individual farmers the use of the insecticide, Phostoxin, with steel drums and butyl sacks furnished by the Office of Agricultural Commercialization of Benin (now SOCAD) under a grant by US AID.

Thus, the initial impetus to the project was aimed at popularizing a new storage technique at the farm level. It also entailed assessment of traditional systems of storage and

experimentation with a variety of potential-improved methods of storage. One of these methods was the cement stave silo, adapted from larger models used in the United States, and the mud-walled Brooks dryer, developed in Ibadan, Nigeria, and adopted by the Institute of Research of Tropical Agriculture (IRAT) at Niaouli, Benin.

Since the process of artificial drying and storage in a new type of silo was experimental, and the results could not be guaranteed, the majority of the expenses of constructing the first units for individual pilot farmers were paid for by the US Embassy Self-Help Fund.

Over the first few years, the Agricultural Service and the Volunteers constantly tried modifications in the design of the silos and dryers. During this period of experimentation Benin Agricultural extension agents and local officials offered their help and advice. Cumulative results of field testing did indicate to the Agricultural Service and the Peace Corps that the cement stave silo merited carefully controlled scientific experimentation to determine its reliability of performance.

By 1971, it was clear that (1) farmers in Southern Benin were ready to accept new methods of storing corn, (2) the earthen dryer was effective and had potential for popularization, and (3) there were two types of silos--cement stave and sheet metal (the latter developed by IRAT which appeared promising for farm level storage).

At this point, it was decided by the Agricultural Service, the Peace Corps, and IRAT that controlled tests should be performed. Accordingly, an experiment was installed at the IRAT station at Niaculi. Twelve cement stave silos and twelve sheet metal silos were built and placed under a large shelter. The silos were filled at the end of October 1971, periodically tested and emptied in June 1972. They were then refilled with new maize in November 1972, similarly tested and emptied in May 1973. The results of these trials demonstrated that both types of silos, if treated with insecticide, store maize extremely

well. It was determined that maize dried to a moisture content of 12% and treated with any of a variety of insecticides could be stored in cement stave silos for at least six months with average losses of not more than 3%.

During this time, volunteers had been working with local agricultural officials to popularize and build silos and dryers for interested farmers who could afford the units which had an average cost of $70-$80 (without expensive tin-roofed shelters). It was after the IRAT tests that the diretor of the Benin Agricultural Service decided to officially adopt this system, and the National Cereals Commission of Benin committed 5 million cfa ($20,000) for the credit construction of 100 storage units for individual farmers each consisting of a 4.5 ton cement stave silo, an earthern dryer, and a tin-roofed shelter. The first ten units were built in the region of Sakete, under the supervision of a technical agent of the Agricultural Service and a Peace Corps volunteer. These completed units were officially accepted by the Minister of Rural Development and Cooperative Action in June 1974, and work was authorized on construction of another twenty in the three southern provinces of Benin.

The National Cereals Commission established criteria for the 100 farmers who were to receive this credit. The participants had to:

- be farmers.
- cultivate at least two hectares (five acres) of maize per year.
- reside in the district where the silo is to be built.
- be recognized by local agricultural agents as progressive and cooperative individuals.
- be willing to sign a contract for the repayment of the loan.
- make a 10,000 cfa ($40) cash advance as an indication of serious intent.

The loan was to be paid off in six equal annual payments at 2% interest. Payment could be made in cash or the equivalent value

of maize at a pre-determined value of 25 cfa/kg (the average price of maize at the time of harvest had been 6-10 cfa/kg).

Over the years, the collaboration grew between the Peace Corps and the Agricultural Service and particularly its Division of Crop Protection which had a supervisory role with respect to the volunteers. Requests for and assignment of volunteers was handled through these offices. A volunteer with experience in the program in Benin was traditionally designated as "Coordinator" by the Benin officials and Peace Corps staff, and acted as a liaison between the grain storage volunteers in the field, the Peace Corps staff in Cotonou, and the government agricultural officials in Porto-Novo. The Peace Corps, besides furnishing volunteers, helped find outside funding for program-related projects.

OTHER MANUALS IN THE ENERGY SERIES

Small Michell (Banki) Turbine:
A Construction Manual

Helical Sail Windmill

Overshot Water-Wheel: Design
and Construction Manual

Wood Conserving Stoves: Two Stove
Designs and Construction Techniques

Three Cubic-Meter Bio-Gas Plant:
A Construction Manual

Hydraulic Ram Pump for Tropical Climates

Solar Water Heater

Solar Still

Making Charcoal: The Retort Method

The Dynapod: A Pedal-Power Unit

Animal-Driven Chain Pump

For free catalogue listing these and other VITA publications, write to:

Publications Service
Volunteers in Technical Assistance
3706 Rhode Island Avenue
Mt. Rainier, Maryland 20822 USA