11032

Construction and Maintenance of Water Wells

a VITA publication

CONSTRUCTION AND MAINTENANCE OF WATER WELLS

for

PEACE CORPS VOLUNTEERS

Prepared for the United States Peace Corps

by

Volunteers in Technical Assistance, Inc. (VITA)

3706 Rhode Island Avenue

Mt. Rainier, Maryland 20822 USA

In accordance with Contract PC 21-1709

April, 1969

Reprinted: April, 1970
Information Resources Division/PDER

Reprinted: February 1979
Volunteers in Technical Assistance, Inc.

© 1979 VITA, Inc.

PREFACE

THE CONSTRUCTION AND MAINTENANCE OF WATER WELLS is designed to aid both the technical instructor as a training manual and the Peace Corps Volunteer as a field resource reference. We hope that the manual will help to turn out Volunteers who can perform effectively in the field.

Each logical unit of instruction is sub-divided into the following categories.

OVERVIEW	A statement summarizing the general significance of the material to follow, and points requiring special emphasis.
OBJECTIVE	A definition of the goal to be achieved by the trainee for that unit of instruction.
TASKS	The steps to be followed to accomplish the objective.
FUNCTIONAL SKILLS	The knowledge and skills needed to be able to perform the tasks.
TERMINAL PERFORMANCE TESTS	The means of evaluating the ability of the trainee to perform the skills needed to complete the tasks in order to accomplish the objective.
RELATED INFORMATION	Content information describing the knowledge and skills needed to perform the tasks correctly.
LESSON PLANS	Suggested guidelines for providing instructional time for the essential areas of each unit.

Although we have followed a typical pattern of presentation, offering logical units of information, it is important to keep in mind that the manual is to be used in preparing Volunteers for a program and that no single unit can possibly stand alone. All are interrelated and need to be included in a systematic presentation. Its value as a reference tool will come after the skills have been learned and the Volunteer is overseas. Once in the field, the objectives and tasks can be used by the Volunteer as an outline description of how the project should proceed.

During the early stages of the project, valuable suggestions and opinions were offered by VITA Volunteers John Abbott, William Applegarth and Hall Finkelstein.

A deep bow to Ethel Carlson, who managed to keep all the horses on the track; Barbara Ille, who spent many hours trudging through first draft scratchings; and Phyllis Raymond, whose typewriter pushed us over the finish line on schedule.

Special appreciation is extended to Messrs. Richard Williams and Mike Furst, United States Peace Corps, and Ken Kalb, Executive Director, VITA, Without their vision, support and encouragement, this manual would not have been written.

Finally, errors and oversights must be credited to...

Michael J. Glowacki

Project Co-ordinator

April 18, 1969

TABLE OF CONTENTS

CONSTRUCTION AND MAINTENANCE OF WATER WELLS

SECTION I-A WELLS

OVERVIEW....3
Ground Water Hydrology....6
What Is Ground Water....7
Evaporation, Runoff and Percolation....8
Porosity and Permeability of Rocks....9
Rock Types and Their Water-Bearing Properties....11
Aquifers and Ground Water Reservoirs....12
Making Simple Maps....14
Lesson Plans....20

SECTION I-B PRINCIPAL METHODS OF WELL CONSTRUCTION

OVERVIEW....24
Type of Wells....27
Construction of Wells....27
Dug Wells....27
Bored Wells....29
Driven Wells....29
Jetted Wells....30
Drilled Wells....31
Evaluation of Various Types of Wells....34
Lesson Plans....35

SECTION I-C GENERAL SPECIFICATIONS FOR WATER WELL CONSTRUCTION

OVERVIEW....37
Location....39
Depth....39
Casing....39
Construction....39
Grouting....40
Yield Test....40
Disinfection....40
Capping and Well Seal....40
Lesson Plans....41

SECTION I-D WELL CONSTRUCTION - EQUIPMENT, TOOLS, TECHNIQUES AND PROBLEMS

OVERVIEW....42
Dug Wells....45
Driven Wells....51
Bored Wells....55
Jetted Wells....62
Drilled Wells....66
Lesson Plans....69

SECTION I-E DEVELOPING AND TESTING THE NEW WELL

OVERVIEW.....74
Hydraulics of Wells.....77
Development of Wells.....80
Grouting and Sealing Casing.....83
Completing Top of Well.....84
Well Disinfection.....85
Testing Wells for Yield and Drawdown.....87
Measurements.....87
Pumping Procedure.....87
Measuring Rate of Pumpage.....88
Measuring Depth of Water.....89
Calculations.....89
Lesson Plans.....91

SECTION II-A TYPES OF PUMPS

OVERVIEW.....96
Types of Well Pumps.....99
Positive Displacement Pumps.....99
Velocity Pumps.....100
Advantages and Disadvantages of Various Types of Pumps.....101
Simple Pumps.....103
Shallow Well Operation.....104
Common Pitcher Pump.....106
Simple Force Pump.....107
Deep Well Operation.....109
Deep Well Lift Pump.....110
Deep Well Force Pump.....110
Continuous-Belt Bucket Pump.....111
Simple Piston Pump.....111
Lesson Plans.....116

SECTION II-B PUMP SELECTION, INSTALLATION AND MAINTENANCE

OVERVIEW.....118
Selecting the Right Pump.....121
Ordering Pumps.....122
Sanitary Installation Guidelines.....124
Over-the-Well Installation.....124
Hand Pumps.....124
Power Pumps.....125
Pump Maintenance.....126
Lesson Plans.....127

SECTION II-C POWER FOR PUMPS

OVERVIEW.....131
Power for Pumps.....133
Types of Power.....133
Man and Animal Power.....133
Gravity.....133
Wind.....133
Steam.....134
Electricity.....134
Internal Combustion Engines.....134
Windmills.....134
Lesson Plans.....138

SECTION III-A CONDUCTING A PRELIMINARY INVESTIGATION

OVERVIEW.....139
Defining a Water Well Program.....144
Local Water Requirements.....144
Data Analysis.....145
Present Water Usage.....145
Present Source Yield.....145
Future Community Growth Potential.....145
Future Water Requirements.....146
Conducting A Geologic Survey.....147
Design Criteria.....149
Water Quality.....149
Physical Factors.....150
Chemical Factors.....150
Biological Factors.....152
Water Quantity.....153
Location.....154
Lesson Plans.....156

SECTION III-B DESIGNING THE PROGRAM CONSTRUCTION PLAN

OVERVIEW.....159
Designing the Program Construction Plan.....162
Financing the Project.....163
Personnel Selection and Training.....164
Lesson Plans.....166

BIBLIOGRAPHY.....169

CONSTRUCTION AND MAINTENANCE OF WATER WELLS

INTRODUCTION: THE NEED FOR SAFE AND WHOLESOME WATER IN DEVELOPING COUNTRIES

SECTION I: WELLS

A. Occurrence and Distribution of Ground Water

1. Hydrologic cycle
2. Geological consideration

B. Principal Methods of Well Construction

1. Types of wells
2. Criteria for selection
3. Equipment requirements

C. General Specifications for Water Well Construction

1. Location
2. Depth
3. Casing
4. Construction
5. Grouting
6. Yield test
7. Disinfection
8. Capping and Well Seal
9. Log
10. Water Samples

D. Well Construction - Equipment, Tools, Techniques, and Problems

1. Dug wells
2. Driven wells
3. Jetted wells
4. Bored wells
5. Drilled wells

E. Developing and Testing the New Well

SECTION II: PUMPS

A. Types of Pumps

B. Pump Selection, Installation, and Maintenance

C. Power for Pumps

SECTION III: DEFINING A WATER WELL PROGRAM

A. Conducting a preliminary investigation

1. Defining local water requirements
2. Establishing design criteria
3. Conducting a geologic survey

B. Designing the Program Construction Plan

1. Matching potential sources against local requirements
2. Planning and scheduling a construction program
3. Financing the program

SECTION I-A

OCCURENCE AND DISTRIBUTION OF GROUND WATER

OVERVIEW:

Any discussion of water wells must be preceded by a description of what ground water is and how it occurs. Hence, in this section the hydrologic cycle, the porosity and permeability of different rock and soil types, and the relationship between topographic features and ground water reservoirs are discussed in some depth.

Emphasis should be placed on obtaining the map making skills and identifying the water-bearing characteristics of various general types of rocks.

This section provides the basic information essential to any person looking for water in the field. The terms and concepts introduced here will be constantly referred to in other sections.

CONSTRUCTION AND MAINTENANCE OF WATER WELLS

SECTION I WELLS

A. OCCURRENCE AND DISTRIBUTION OF GROUND WATER

OBJECTIVE: Explain the general principles of the occurrence and distribution of ground water.

TASKS:

1. Identify the steps of the hydrologic cycle.
2. Explain the relationship between topographic formations and ground water occurrence.
3. Describe how water percolates into the earth to form aquifers.
4. Summarize geologic indicators which suggest potential sources of ground water.

FUNCTIONAL SKILLS:

1. Define the terms associated with ground water hydrology essential to an understanding of the subject.
2. Determine the porosity and permeability of different rock and soil formations.
3. Identify geologic features on topographic and cross-sectional maps.
4. Read and interpret maps and geographic data tables.

TERMINAL PERFORMANCE TESTS:

1. Draw an illustration of the hydrologic cycle, defining all steps essential to an understanding of the illustration.
2. Given a number of rock and soil samples, determine the porosity and permeability characteristics of each sample.

3. Given a map of an area, identify the outstanding geologic features, their impact on ground water occurrence, and the type of ground water which would most probably be found at varying points.

GROUND WATER HYDROLOGY

Hydrologic Cycle: The source of water for well supplies always is considered as ground water. All ground water is supplied by the hydrologic cycle. Water from the ocean, rivers, lakes and the ground is supplied to the atmosphere by evaporation. Transpiration from trees, vegetation, and other living cells also is a source of water vapor. This vapor is carried upward by rising currents of warm air to form clouds. The clouds, upon contact with cooler air, condense into moisture that precipitates or falls to the ground in the form of sleet, snow, hail or rain. A portion of the precipitation recharges the ground water aquifers and underground storage. This type of replenishment is referred to as "percolation" of rainfall. A part of the precipitation finds its way to rivers, lakes and other bodies of surface water or returns to the ocean as runoff water. Some phases of the cycle may change or vary in nature from time to time. These variations or changes may be influenced by changing temperatures, air currents and other physical phenomena. To better understand nature's way of providing man's most prized possession it is important to remember that water may exist in a liquid, solid or gaseous form.

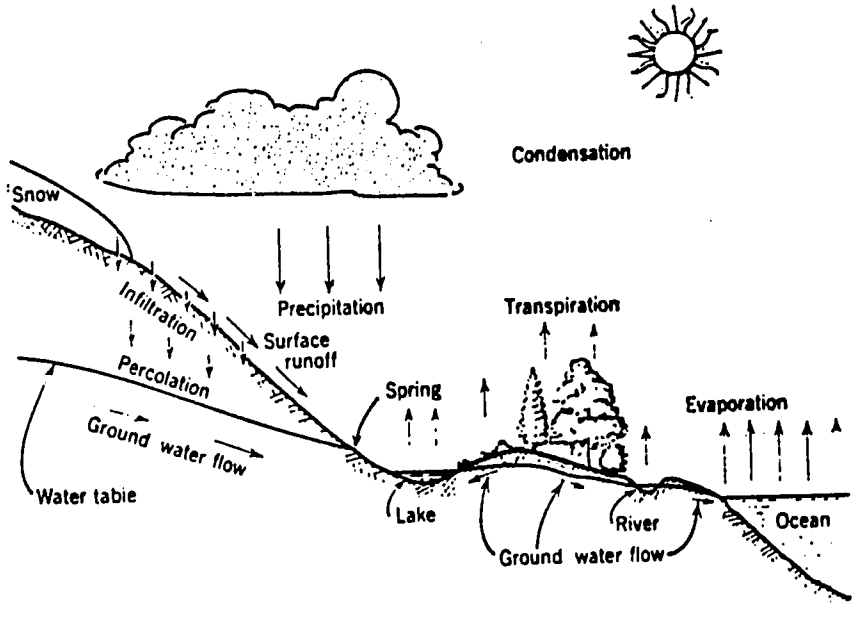

Figure 1 The Hydrologic Cycle

Definition of Terms

Precipitation: Water from the atmosphere deposited on the surface of the earth as either rain, snow, sleet, hail or mist.

Surface Runoff: Precipitation that flows over the surface of the land, ultimately reaching streams.

Evaporation: The process by which water is converted to vapor and returned to the earth's atmosphere.

Transpiration: The release of water vapor to the atmosphere from the surface of plant parts.

Percolation: The movement of precipitation through the earth's surface to underground reservoirs of water. It is this water which is defined as ground water.

WHAT IS GROUND WATER?

Water that has percolated from the surface of the earth and fills the pores, spaces, or interstices of a rock or soil formation is called GROUND WATER.

It is hard to picture underground water. Most people have a fanciful notion of an underground lake, or a murky stream moving along slowly in dark underground channels scarcely high enough to stand upright in. There are such underground streams in cavernous limestone or lava rock, but they are not common. Mostly, ground water is just the water filling pores or cracks in the rocks (Fig. 2, 3).

But if ground water is not a river or lake as we think of them on the surface, how is it carried in the earth? Why doesn't it soak through the earth? It does not because the rocks at great depth lack openings--pores or cracks--through which water can move, or if they have openings they are too tightly packed to let water move through freely.

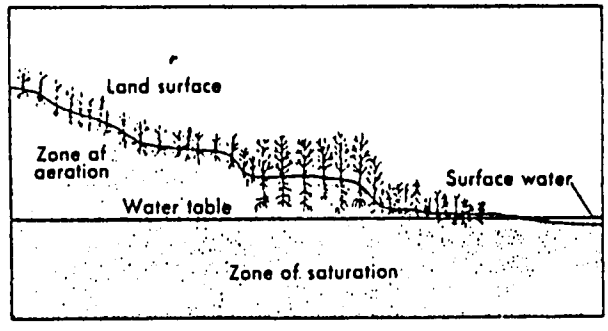

Figure 2 Zone of Aeration and Zone of Saturation

Between the land surface and the water table there is a space which the hydrologist calls the zone of aeration (Fig. 2, 3). In the zone of aeration there is usually at least a little water, mostly in the smaller openings; the larger openings in the rocks contain air instead of water. After a heavy rain this zone may be almost saturated; in a long, dry spell, it may become almost dry. In the zone of aeration, water is held to the soil and rocks by forces the hydrologists call capillarity, and it will not come into a well. These are the same forces that hold enough water in a wet towel to make it feel damp after it has stopped dripping.

When rain falls, the first water that enters the soil is held by capillarity, to make up for the water that has been evaporated or taken up by plants during the preceding dry spell. Then after the thirsty plants and soil have had enough, and if the rain still continues to fall, the excess water will reach the water table--the top of the zone in which the openings in the rock are saturated. Below the water table, all the openings--crevices, crannies, pores--are completely full of water (Fig. 3). The raindrops will become ground water, and this water is free to come into a well.

EVAPORATION, RUNOFF AND PERCOLATION

Remember, three things can happen to the water that falls on the surface of the earth: it can evaporate again, it can run off over the surface, or it can sink into the ground. For any given period of precipitation, the amount of water moved by each process is determined by the following factors:

a. Evaporation takes place when the relative humidity of the air is less than 100 percent. Hence, as the relative humidity decreases, the rate of evaporation increases.

b. Percolation is greater than run-off where the surface soil is porous than where it is relatively impervious; it is greater on gentle slopes than on steep ones; it is greater when the rain falls slowly than when it comes in violent showers; and it is greater where the ground is protected by a cover of vegetation than where the ground is bare.

Later on, when searching for well locations, these relationships could mean the difference between a high yield well and a dry one, a good location and a poor one.

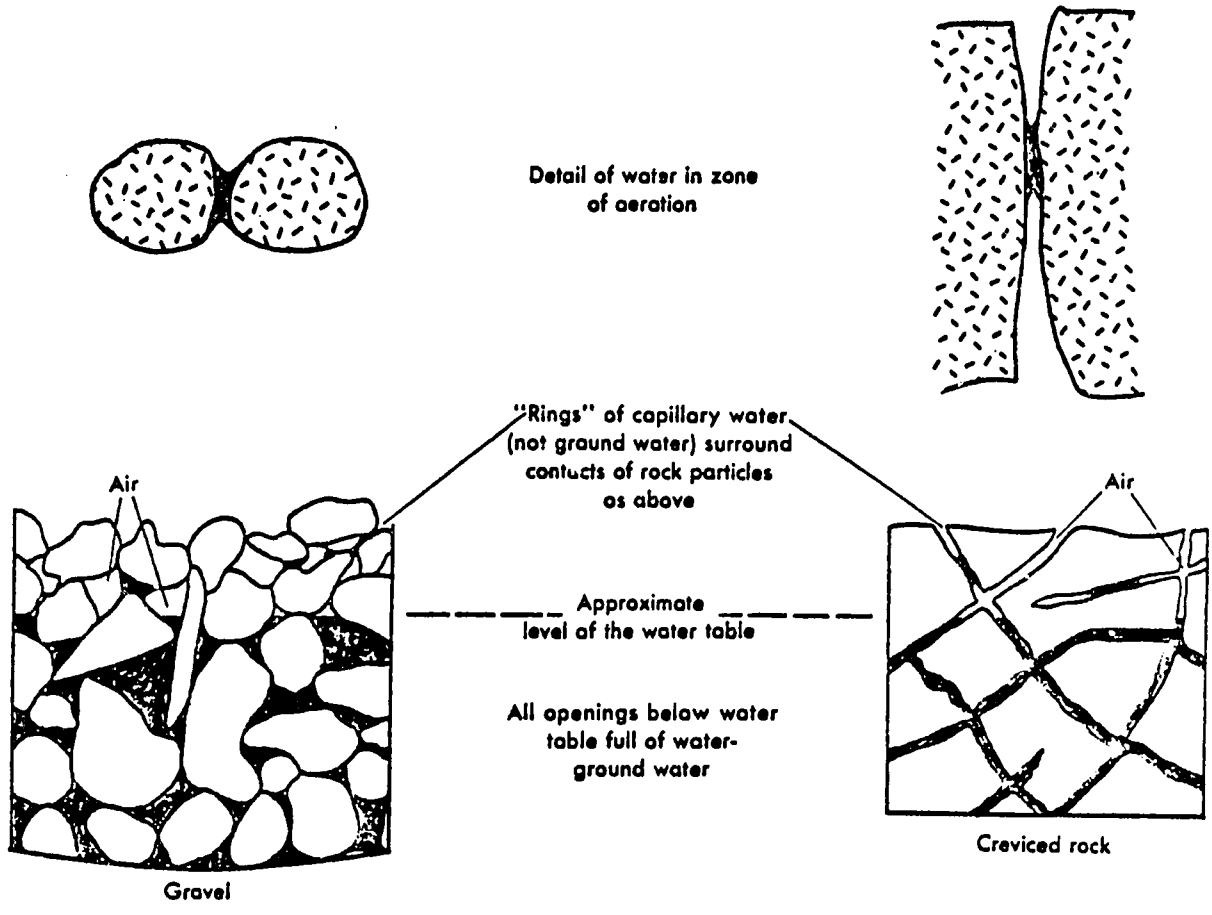

Figure 3 How water occurs in rocks

POROSITY AND PERMEABILITY OF ROCKS

The amount of water that a given rock can contain depends on the porosity of the rock--the spaces between the grains or the cracks that can fill with water. If the grains are all about the same size, or well sorted, the spaces between them account for a large proportion of the whole volume. This is true of gravel and sand. However, if the grains are poorly sorted, the rocks do not hold as much water. The gravel in Figure 3 is moderately well sorted.

If water is to move through the rock, the pores must be connected one to another. If the rock has a great many connected pore spaces, of which a large part are sizable so that water can move freely through them, we say that the rock is permeable. Large amounts of water are available to a well from saturated permeable rocks. But if the pores or cracks are small, poorly connected, or nearly lacking, the aquifer can yield only a small amount of water to a

well. The porosity of different kinds of rock varies widely. In some the porosity is less than 1 percent; in others, mostly unconsolidated rock such as sand and gravel, it may be as high as 30 or 40 percent.

A rock that will be a good source of water must contain either many pore spaces, or many cracks, or both. A compact rock such as granite, almost without pore spaces, may be permeable if it contains enough sizable fractures. Nearly all consolidated rock formations are broken by cracks, called joints (Fig. 3). These joints are caused by the same kind of stresses in the earth's crust that cause earthquakes. At first they are just hairline cracks, but they tend to open through the day-to-day action of rain, sun, and frost. The ice crystals formed by water that freezes in rock crevices will cause the rocks to split open. Heating by the sun and cooling at night cause expansion and contraction that produce the same result. Water will enter the joints and gradually dissolve away the rock, enlarging the openings.

If the joints intersect each other, water can move from one to another much as it flows through the water pipes in a municipal water system. When water circulates in them, it does so through joint cracks. The water yield of wells drilled in these rocks depends on how many joints are intersected by the well, and how wide they are.

Water will move faster in certain kinds of rocks. A clayey silt having only very tiny pores will not carry water very readily, but a coarse gravel will carry water freely and rapidly. Sandstone is a rock having natural pore spaces through which water will move more easily than it will through tighter rock, such as granite. Granite and slate are less porous than sandstone. Some rocks are what we call cavernous; they have hollowed-out openings in them. Some limestone is like this, and water often flows through limestone at a faster rate than through other formations. Gravel has numerous open spaces. Water may travel through it at rates of tens or hundreds of feet per day. In silt or fine sand it may move only a few inches a day. Flow of streams is measured in feet per second; movement of ground water is usually measured in feet per year.

Ground water moves through permeable rocks, and around and in between impermeable ones. Just like surface water, it takes the path of least resistance. Although it moves so slowly, it may travel for miles before it emerges as a spring, or seeps unseen into a stream, or is tapped by a well. Fifty miles is not uncommon. In the Dakota Sandstone beneath the northern Great Plains, water travels hundreds of miles underground.

There isn't necessarily a relation between the water-bearing capacity of rocks and the depth at which they are found. A very dense granite may be found at the earth's surface, as in New England, while a porous sandstone may lie several thousand feet below the surface, as in the Great Plains. However, on the average, porosity and permeability grow less as depth increases.

ROCK TYPES AND THEIR WATER-BEARING PROPERTIES

The rocks that form the crust of the earth are divided into three classes:

1. Igneous--rocks which are derived from the hot magma deep in the earth. They include granite and other coarsely crystalline rocks dense igneous rocks such as occur in dikes and sills, basalt and other lava rocks, cinders, tuff, and other fragmental volcanic materials.

2. Sedimentary--rocks which consist of chemical precipitates and of rock fragments deposited by water, ice, or wind. They include deposits of gravel, sand, silt, clay, and the hardened equivalents of these-conglomerate, sandstone, siltstone, shale, limestone, and deposits of gypsum and salt.

3. Metamorphic--rocks which are derived from both igneous and sedimentary rocks through considerable alteration by heat and pressure at great depths. They include gneiss, schist, quartzite, slate, and marble.

The pores, joints, and crevices of the rocks in the zone of saturation are generally filled with water. Although the openings in these rocks are usually small, the total amount of water that can be stored in the subsurface reservoirs of the rock formations is large. The most productive aquifers are deposits of clean, coarse sand and gravel; coarse, porous sandstones; cavernous limestones: and broken lava rock. Some limestones however, are very dense and unproductive. Most of the igneous and metamorphic rocks are hard, dense, and of low permeability. They generally yield small quantities of water. Among the most unproductive formations are the silts and clays. The openings in these materials are too small to yield water, and the formations are structually too incoherent to maintain large openings under pressure. Compact materials near the surface, with open joints similar to crevices in rock, may yield small amounts of water.

AQUIFERS AND GROUND WATER RESERVOIRS

Hydrologists use the word rock to mean both hard, consolidated formations, such as sandstone, limestone, granite, or lava rocks, and loose, unconsolidated sediments such as gravel, sand, and clay. They use the word aquifer for a layer of rock that carries a usable supply of water. Gravel, sand, sandstone, and limestone are the best water carriers, but they form only a fraction of the rocks in the earth's outer crust, and not all of them yield useful supplies of water. The bulk of the rocks consist of clay, shale, and crystalline rocks--the term used for the great variety of hard rocks that form most of the earth's crust. Clay, shale, and crystalline rocks are all poor water producers, but they may yield enough water for domestic and stock uses in areas where no better aquifers are present.

The words aquifer and ground-water reservoir are sometimes used interchangeably, but generally a ground-water reservoir is understood to mean the whole "zone of saturation" from the water table to the depth where openings in the rocks disappear. Ground-water reservoirs provide water for wells and springs and also supply water to streams in rainless periods. We do not know exactly how much these ground-water reservoirs hold throughout the United States, but it is undoubtedly several times as much as all our lakes and surface reservoirs put together.

Though similar in function, a ground-water reservoir is obviously not quite the same thing as a surface-water reservoir. For one thing, the surface reservoir is used to regulate the flow of streams. Water in the ground-water reservoir, on the other hand, is not so easily regulated. However, the rate of movement is so slow, compared to that of streams, that for all practical purposes these ground-water reservoirs may be considered long-term media of water storage. Ground-water reservoirs have certain practical advantages over surface reservoirs: they do not lose great quantities of water through evaporation, nor do they fill up with sediment.

The reason the water below the water table will come into a well, and the water above will not, is a bit technical, but not too hard to understand. The water above the water table, as in the damp towel, is sucked in and held against the pull of gravity. The pressure in the water is less than the pressure of the atmosphere, so it is forced by atmospheric pressure to stay where it is. Below the water table, all the water is under pressure greater than atmospheric. This pressure is sufficient to force the water to move from one pore into a larger one when the larger one is emptied. A well is nothing but an extra-large pore into which the pressure forces the water to move to replace water drawn out by the pump.

Thus, any well that extends below the water table will fill with water up to the level of the water table. If the well is pumped dry, it will fill up again. The important thing is, will the water come in fast enough to make the well useful for a continuing water supply? A tight rock such as clay or granite, with tiny pores or only a few hairline cracks, may give up its water so slowly that several days would be required for a well to fill up to the level of the water table. Obviously, such a rock would not be a useful water bearer. On the other hand, the openings in the rock may be large enough to let water through freely, so that it can be taken out in useful amounts. The amounts yielded to a well that justify calling a rock water bearing range from a few hundred gallons a day, where only a domestic supply is needed, to as much as several million gallons a day.

MAKING SIMPLE MAPS

Although there is no simple way of locating ground water, there is one thing to keep in mind--there is some water under the earth's surface almost everywhere. (This might account for the seeming success of so many dowsers and their forked sticks!)

In finding out how much water is available and whether it can come into a well fast enough to be useful, certain clues, if recognized are helpful. For instance, ground water is likely to occur in larger quantities under valleys than under hills. In arid regions, certain types of water-loving plants give the clue that there has to be ground water at a shallow depth underneath to feed them. Any area where water shows up at the surface--in springs, seeps, swamps, or lakes--has to have some ground water, though not necessarily in large quantity, or of usable quality.

Searching for and locating appropriate well-location sites will require observation in the field. These observations, properly recorded, can be reduced to comprehensible size and concreteness by making simple maps.

Basic Requirements of a Map: When preparing simple maps, there are three basic requirements that a "home-made" map must satisfy:

Direction-- for our purposes, the four cardinal directions: N.E.S. and W. The instrument most commonly used to determine direction is the compass.

Scale-- a direct comparison between linear measurements on the earth and on the map. Scale is determined by selecting a unit of measure for the map and a corresponding one for the surface being mapped. For example, 1 inch on the map could equal 10 feet on the surface of the earth.

Position-- position is a consequence of distance and direction. In other words, from a known point, another location a certain distance and a given direction away.

Map Symbols: Selected features on topographic maps fall into three categories:

- Surface configuration, including form, elevation, and relief.

- Drainage pattern, including running water and standing water.

- Material works of man, including settlements, structures he has built, transportation routes, and other indicators of his land use.

Sometimes a fourth category, vegetation cover, is included. This category would include orchards, forests, pastures, etc. Symbols used on U. S. topographic maps are included in Figure 4.

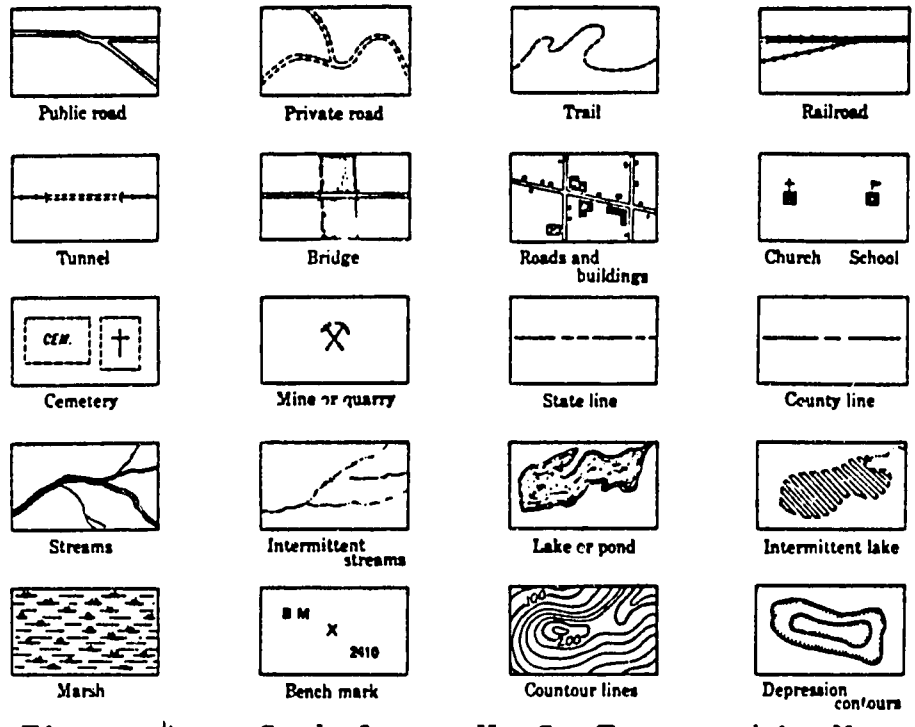

Figure 4 Symbols on U. S. Topographic Maps

<u>Basics of Contouring</u>: A contour line is an imaginary line on the surface of the ground representing a level of elevation above a reference point. The space between two contour lines is called a contour interval. Since a contour line is parallel to a reference point, it neither rises nor falls in elevation, and it must, if traced far enough, form an endless line ( ). No two contour lines may touch each other, since they are separated by a contour interval. Various ways features are illustrated with contour lines as shown in Figure 4.

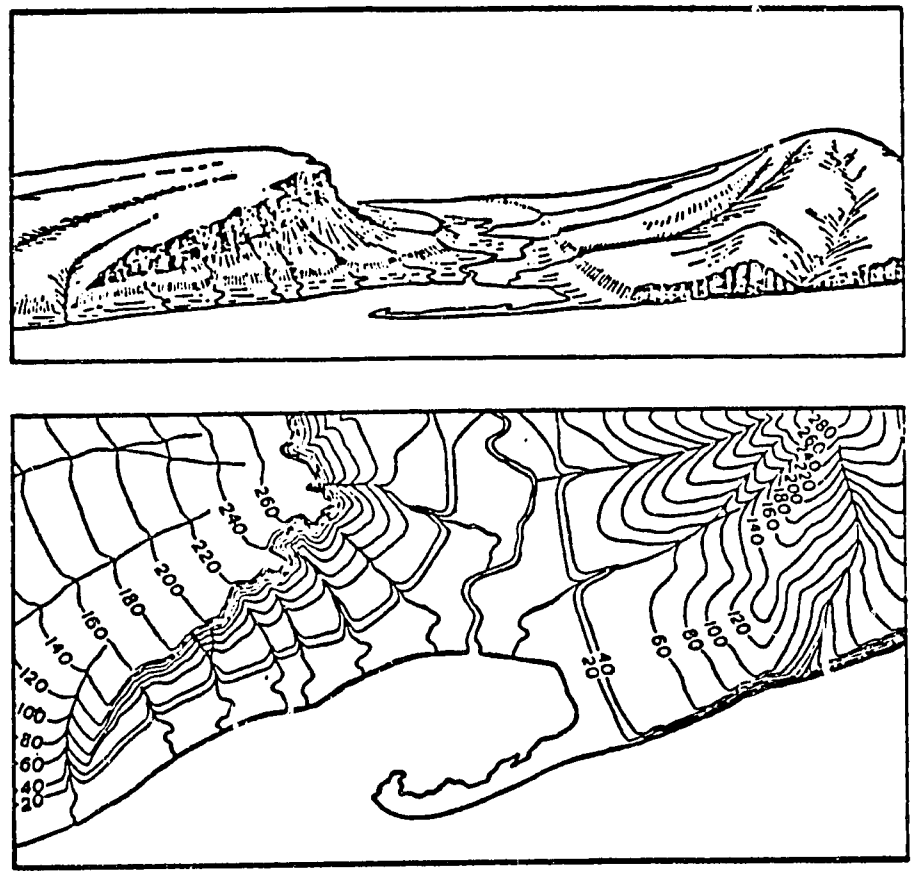

Figure 5 A relief sketch and its contour map representation

When reading or making topographic maps, there are certain basic rules to keep in mind:

a. Contour lines are continuous and do not branch or cross.

b. A group of concentric closed contour lines represents a hill.

c. Contour lines bend when they approach a stream valley so that the bend in the line points in the upstream direction.

d. Contour lines that enclose depressions which have no outlets (i.e. pits) are marked with hachures pointing down-slope, drawn along the contour lines at right angles to the lines. (note Fig.5)

e. When contour lines are bunched together, the relief slope is great. If contour lines are irregular, the surface is rough.

f. Areas of widely spaced contours are low in slope, representing plains, valleys, or broad upland surfaces.

Map Making using a Plane Table: Prior to the advent of aerial photography, most topographical maps were made by the use of plane tables.

A description is given for the construction of serviceable maps using a plane table. Such maps are valuable for irrigation, drainage and village layout plans.

Tools and Materials

Plane table
Paper
Pencil
Ruler
Pins
Tape measure (optional)
Spirit level (optional)
Compass

Details

The first step is for the map maker to measure his pace. A one hundred foot interval should be laid out on level ground. If only a foot ruler is available, this may be used to mark out three or four feet on a stick, and this stick in turn used to measure the 100 feet. Being careful to work normally, the map maker then determines the number of paces over the 100 foot interval. By division, it is then possible to find a number of feet in an average pace.

The next step is to select a scale for the map. This is determined by judging the longest distance to be mapped and the size of the map desired. It should be noted that the map does not have to be made on a single sheet of paper but can be spliced together when completed. As an example, if one wanted a map 2 1/2 feet long to portray an area whose major distance is 1/2 mile, 2640 feet, then a scale of 100 feet to the inch would be convenient.

Paper should be placed on the plane table and the plane table oriented on or near some principal feature of the map, that is, a path, road, creek, street, etc. A pin should then be placed vertically in the spot on the finished map where this location is to be represented on the spot. The plane table should be made level - by use of a spirit level, if available. The table should be rotated to a

proper orientation, that is, so that the direction will appear on the finished map in the desired way. Now sight along the first pin to another principal feature which is visible from the table location (a bend in the road, a hill or any feature that will tie the map together); moving the second pin into the line of sight. A ruler may be used for this purpose if it has a sighting edge or even a couple of pins stuck into it. Now draw a line in the direction defined by the two pins. Measure the distance to the feature observed either by pacing or with a tape. Scale this distance along the line drawn, starting at the initial pin. Repeat this process for other principal features which may be seen from this location. When this has been done, move the table to one of the points just plotted, selecting one which will enable you to move over the territory in a convenient fashion. Set up the plane table over this point and reorient the table. Do this by putting pins into the map at the present and previous locations on the map in the same direction as the line exists in nature. Again from this new location, map in the desired features which can be conveniently sighted.

In this way the entire region to be mapped may be covered in a systematic way. If gaps appear or if more detail is needed, you may go back and set up over some mapped feature, reorient the map by sighting on a second feature, and proceed to map in the detail.

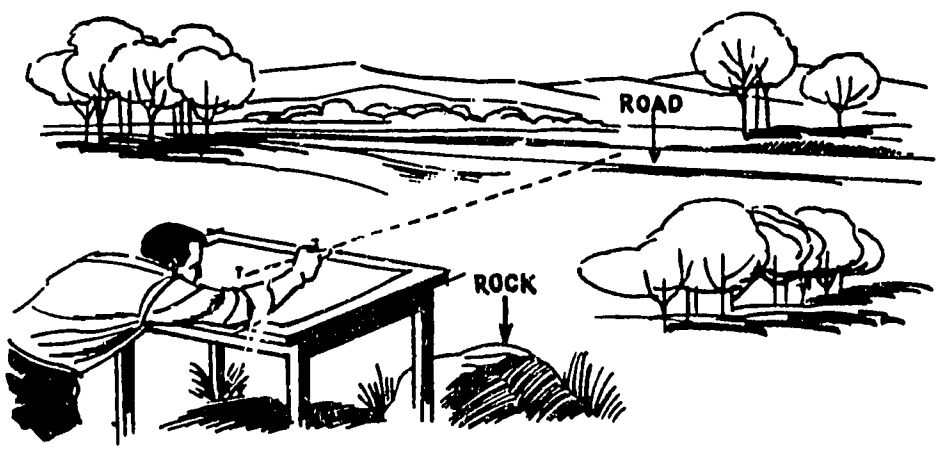

Figure 6 Plane Table Map-Making

An alternate procedure may be used in mapping features which are not going to be used as plane table locations in the mapping process. This involves drawing a line in the direction of each feature from two plane table locations. The intersection of these two lines corresponding to a single feature locates the feature on the map. As a result this avoids the necessity for measuring distances. Note, however, that it is impossible to avoid measuring the distances between plane table locations.

If a spirit level is available, it is possible to level the plane table accurately; using a ruler or other sighting device, relative elevations may be plotted on the map. A stick about six or eight feet long should be marked off in inches, and the person holding the stick vertically can, by moving his finger, identify to the person sighting, the distance up from the ground through which the line of sight passes.

I-A OCCURRENCE AND DISTRIBUTION OF GROUND WATER

LESSON NO. 1

LESSON OBJECTIVE: Describe the fundamental concepts essential for a basic understanding of ground water hydrology.

TOPIC	INSTRUCTIONAL PROCEDURE	SUPPLEMENTAL MATERIALS / RELATED READING
The Hydrologic Cycle	1) Describe how water moves from the earth's surface, to the atmosphere and back again.	Drawing or illustration of the hydrologic cycle
	2) Define the terms: PRECIPITATION RUN-OFF EVAPORATION TRANSPIRATION PERCOLATION.	
Definition of Ground Water	1) List the three things that happen to water that falls on the surface of the earth.	
	2) Define the term: GROUND WATER.	
	3) Describe how water percolates to the zone of saturation.	
	4) Illustrate the percolation of water.	Drawing (cut-away) illustrating aeration and saturation
	5) Define the terms used in the above illustration.	

I-A OCCURRENCE AND DISTRIBUTION OF GROUND WATER

LESSON NO. 2

LESSON OBJECTIVE: Explain and demonstrate the effects that different rock and soil types and geographic formations have on the flow of ground water.

TOPIC	INSTRUCTIONAL PROCEDURE	SUPPLEMENTAL MATERIALS / RELATED READING
Ratio between run-off and percolation	1) Quickly review ways in which water falling on the earth's surface is dissipated. 2) List the conditions affecting the ratio between run-off and percolation: a. porosity of the surface soil b. slope of the land c. intensity of precipation d. vegetation cover. 3) Discuss how each factor influences run-off and percolation.	
Porosity and Permeability of Rocks (Definition of)	1) Define each term 2) Describe influence each factor has on the movement of ground water.	A Primer on Ground Water, p. 7.
Rock Types and Their Water Bearing Properties	1) Identify the three classes of rocks - igneous, sedimentary, metamorphic. 2) List common types of rocks in each class. 3) Describe the water-bearing properties of each class. 4) Distribute samples of rock types for inspection.	Samples of rock types.
Acquifers and Ground Reservoirs.	1) Discuss the <u>discharge</u> and <u>recharging</u> of ground water supplies. 2) Define the words ACQUIFER and GROUND RESERVOIR. 3) Describe the movement of ground water; how it returns to the earth's surface.	A Primer on Ground Water, p. 8.

I-A OCCURRENCE AND DISTRIBUTION OF GROUND WATER

LESSON NO. 3

LESSON OBJECTIVE: Describe the basic requirements of a map and techniques for making simple topographic survey maps.

TOPIC	INSTRUCTIONAL PROCEDURE	SUPPLEMENTAL MATERIALS / RELATED READING
Using Maps in Locating Water Sources	1) Discuss the relationship between surface topography and ground water reservoirs.	
Basic Requirements of a Map	1) Identify the three essential components of any map: DIRECTION SCALE POSITION 2) Briefly discuss how each component is achieved in map making.	
Simple Map Symbols	1) Distribute copies of topographic maps to trainees. 2) Direct questions regarding map locations; ascertain meanings for obvious map symbols. 3) Discuss categories of map symbols: SURFACE CONFIGURATIONS DRAINAGE PATTERNS MAN-MADE WORKS 4) Provide practice in locating various items that are on the map.	Topographic maps (preferably of the training site location.
Basics of Contouring	1) Define <u>CONTOUR LINES</u> 2) Describe characteristics of contour lines. 3) List basic rules for constructing or interpreting contour lines. 4) Using topographic maps, illustrate various geographic formations represented on the map.	Topographic maps

I-A OCCURRENCE AND
DISTRIBUTION OF GROUND WATER
Lesson No. 3 (Continued)

Plane Table Map Making	1) Describe techniques of plane table map making	Materials: Plane table; paper; pencil; ruler pins; tape measure (optional).
	2) Supervise trainees in field exercise.	Field location containing good cross-section of natural and man-made features.

SECTION I-B

PRINCIPAL METHODS OF WELL CONSTRUCTION

OVERVIEW:

This section introduces the subject of wells: types of wells, methods of contruction, characteristics of each type, and equipment used in well construction. Although the section is oriented around lecture-discussion activities, if various types of wells exist in the area of the training site, every effort should be made to visit these sites.

In most cases the training program will be concerned with the construction of one type of well. Nonetheless, time should be spent introducing the various types of wells and the equipment needed for constructing each type. Opportunity to examine the various pieces of equipment and experiment with how they operate should be provided.

B. PRINCIPAL METHODS OF WELL CONSTRUCTION

OBJECTIVE: Evaluate the advantages and limitations of each principal method of well construction.

TASKS:

1. According to method of construction, identify each of the five types of wells.

2. Select the criteria to be used in evaluating the relative merits of each type of well (ease of construction, type of equipment required, storage capacity, ease of penetration into certain types of formations, ease of safeguarding against pollution).

3. Prepare a matrix with one axis representing the types of wells and the other axis the criteria to be used in evaluating each method of well construction.

4. Summarize the advantages and limitations of each type of well.

FUNCTIONAL SKILLS:

1. Recall the five types of wells by method used in construction.

2. Recall the criteria used in evaluating the types of wells.

3. Identify types of equipment used in well construction by nomenclature and use.

4. Recognize the differences between complex and simple equipment; difficult and easy construction methods.

5. Identify the geographic/geologic conditions most suitable for each method of well construction.

6. Identify the limitations associated with each type of well.

TERMINAL PERFORMANCE TESTS:

1. Given graphic illustrations of the principal methods of well construction, be able to identify:

   a. Type of well

   b. Probable geologic profile

   c. Equipment names and uses

   d. Advantages and limitations of each method.

2. Given a written description of a geographic area, indicate the best type of well for the area and the reasons why, the required equipment and tools, and the advantages and limitations of that type of well.

TYPE OF WELLS

Wells may be classified with respect to construction methods as dug, bored, driven, drilled, and jetted.

Drilled wells may be drilled by either the rotary or percussion method.

Each type of well has distinguishing physical characteristics and is best adapted to meet particular water-development requirements.

CONSTRUCTION OF WELLS

DUG WELLS

Because they are difficult to maintain in a sanitary condition, dug wells are not recommended if other ground-water sources can be developed. Under certain conditions, however, they may be the most feasible means of obtaining water, and they can furnish a useful supply in areas remote from sources of contamination.

Dug wells are quite cheap to construct. The excavated material can be lifted to the surface by a bucket attached to a windlass or hoist. A power-operated clam shell or orange peel bucket may be used in holes greater than 3 feet in diameter where the material is principally gravel or sand. In dense clays or cemented materials, pneumatic hand tools are effective means of excavation.

To prevent the native material from caving, one must place a crib or lining in the excavation and move it downward as the pit is deepened. The space between the lining and the undisturbed embankment should be backfilled with clean material. In the region of water-bearing formations, the backfilled material should be sand or gravel. Cement grout should be placed to a depth of 10 feet below the ground surface to prevent entrance of surface water along the well lining.

Dug wells may be lined with brick, stone, or concrete, depending on the availability of materials and the cost of labor. Precast concrete pipe, available in a wide range of sizes, provides an excellent lining. Bell and spigot pipe may be used for a lining where it can be placed inside an unsupported pit. This type of pipe requires careful backfilling to guarantee a tight well near the surface. The prime factor with regard to preventing contaminated water from entering a dug well is the sealing of the well lining and otherwise excluding draining-in of surface water at and near the well.

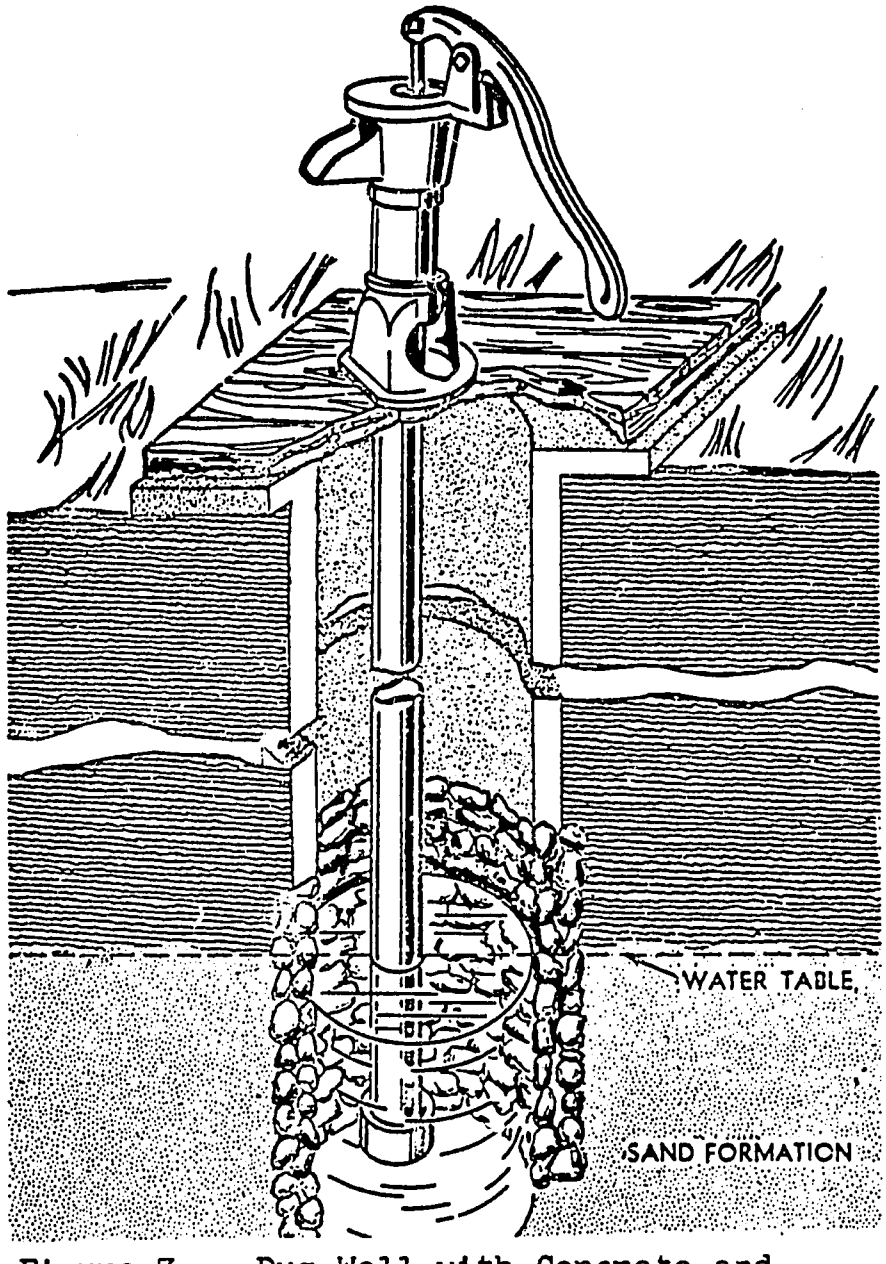

Figure 7 Dug Well with Concrete and Stone Lining

Most dug wells do not penetrate much below the water table because of the difficulties in manual excavation and the positioning of linings. The depth of excavation can be increased by the use of pumps to lower the water level during construction. Because of their shallow penetration into the zone of saturation, many dug wells fail in times of drought when the water level recedes or when large quantities of water are pumped from the wells.

BORED WELLS

Bored wells are commonly constructed with earth augers turned either by hand or by power equipment. Such wells are usually regarded as practical at depths of less than 100 feet when the water requirement is low and the material overlying the water-bearing formation has noncaving properties and contains few large boulders. In suitable material, holes from 2 to 30 inches in diameter can be bored to about 100 feet without caving.

In general, bored wells have the same characteristics as dug wells, but they may be extended deeper into the water-bearing formation.

Bored wells may be cased with tile, concrete pipe, standard wrought iron, steel casing, or other suitable material capable of sustaining imposed loads. The well may be completed by installing well screens or perforated casing in the water-bearing sand and gravel. Proper protection from surface drainage should be provided by sealing the casing with cement grout to a depth of at least 10 feet below the ground surface.

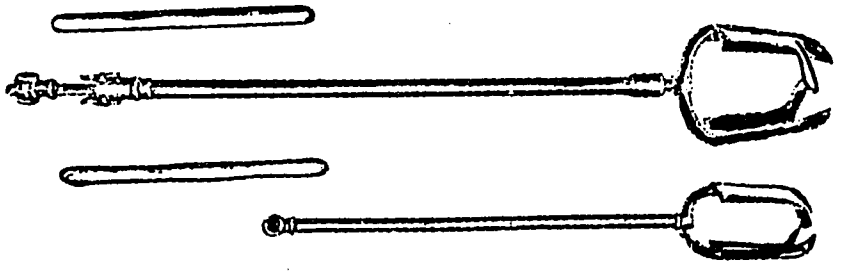

Figure 8 Hand Augers

DRIVEN WELLS

The simplest and least expensive of all well types is the driven well. It is constructed by driving into the ground a drive well point which is fitted to the end of a series of pipe sections. The drive point is of forged or cast steel. Drive points are usually 1 1/4 or 2 inches in diameter. The well is driven with the aid of a maul, a drive shoe, or a pile driver. For deeper wells, the well points are sometimes driven into water-bearing strata from the bottom of a bored or dug well. The yield of driven wells is generally small to moderate. Where they can be driven an appreciable depth below the water table, they are no more likely than bored wells to be seriously affected by water-table fluctuations. The most suitable locations for driven wells are areas containing alluvial deposits of high permeability. The presence of coarse gravels, cobbles, or boulders interferes with sinking the well point and may damage the wire mesh jacket.

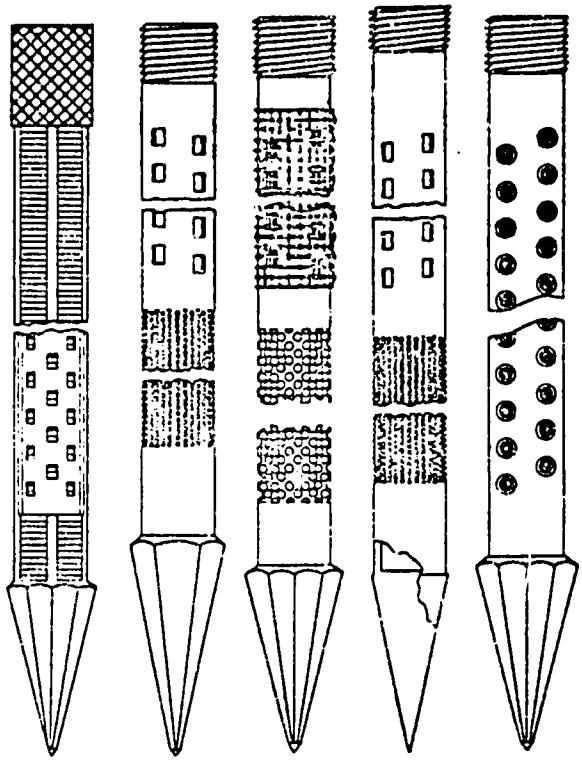

Figure 9 Typical Drive Points

When a well is driven, it is desirable to prepare a pilot hole that extends to the maximum practical depth. This can be done with a hand auger slightly larger than the well point. After the pilot hole has been prepared, the assembled point and pipe are lowered into the hole. Depending on the resistance afforded by the formation, driving is accomplished in several ways. The pipe is driven by directly striking the drive cap, which is snugly threaded to the top of the protruding section of the pipe. A maul, a sledge, or a special driver may be used to hand-drive the pipe. The special driver may consist of a weight and sleeve arrangement which slides over the drive cap as the weight is lifted and dropped in the driving process. (See Fig. 10)

JETTED WELLS

A rapid and efficient method of sinking well points is that of jetting or washing-in. This method requires a source of water and a pressure pump. Water forced under pressure down the riser pipe issues from a special washing point. The well point and pipe are then pushed down as material is loosened by the jetting.

The riser pipe of a jetted well is usually used as the suction pipe for the pump. In such instances, surface water may be drawn into the well if the drive pipe develops holes by corrosion. An outside protective casing may be installed to a depth of at least 10 feet to provide protection against the possible entry of contaminated surface water. The annular space between the casings should then be filled with cement grout. The protective casing is best installed in an auger hole and the drive point then driven inside it.

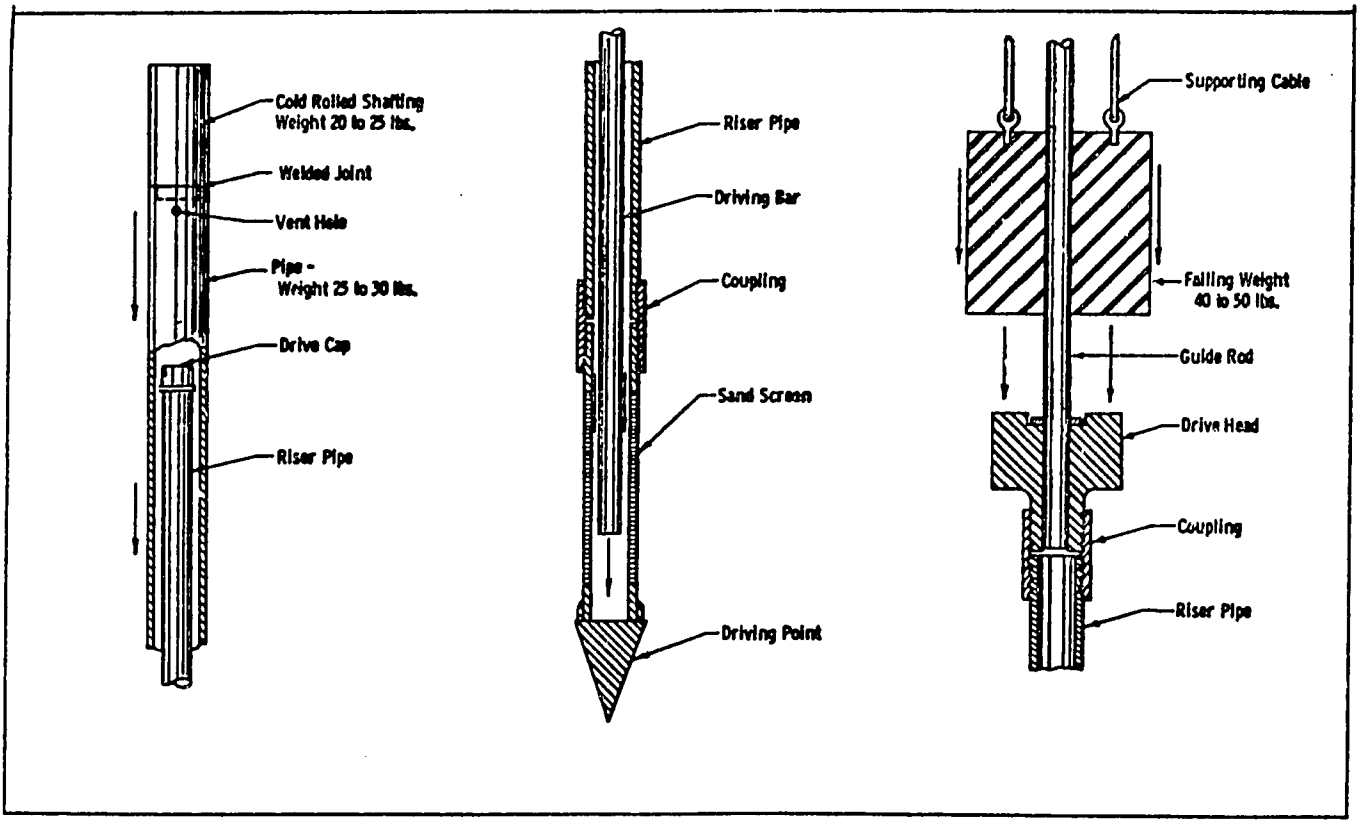

Figure 10 Driving Methods

DRILLED WELLS

Construction of a drilled well is ordinarily accomplished by one of two techniques--percussion or rotary hydraulic drilling. The selection of the method depends on the geology of the site; the depth, desired diameter, and capacity of the well; and on the investment and time available for construction.

PERCUSSION (CABLE TOOL) METHOD

Drilling by the cable-tool or percussion method is accomplished by raising and dropping a heavy drill bit and stem. The impact of the bit crushes and dislodges pieces of the formation. The reciprocating motion of the drill tools mixes the drill cuttings with water into a slurry at the bottom of the hole. This is periodically brought to the surface with a bailer, a 10 to 20 foot long pipe equipped with a valve at the lower end.

Caving is prevented as drilling progresses by driving or sinking into the ground a casing slightly larger in diameter than the bit. When wells are drilled in hard rock, casing is usually necessary only through the overburden of unconsolidated material. A casing may be necessary in hard rock formations to prevent caving of beds of softer material.

Under ordinary conditions it is not difficult to detect water-bearing beds in cable-tool holes, since the slurry in the hole does not tend to seal off the water-bearing formation. A sudden rise or fall in the water level in the hole during bailing indicates that a permeable bed has been entered. Crevices or soft streaks in hard formations are often water-bearing. Sand, gravel, limestone, and sandstone are generally permeable and produce the largest water yields.

ROTARY HYDRAULIC DRILLING METHOD

The rotary hydraulic drilling method may be used in most formations. The essential parts of the drilling assembly include a derrick and hoist, a revolving table through which the drill pipe passes, a series of drill pipe sections, a cutting bit at the lower end of the drill pipe, a pump for circulation of drilling fluid, and a power source to drive the drill.

In the drilling operation, the bit breaks up the material as it rotates and advances. The drilling fluid (called mud) pumped down the drill pipe picks up the drill cuttings and carries them up the annular space between the rotating pipe and the wall of the hole. The mixture of mud and cuttings is discharged to a settling pit where the cuttings drop to the bottom and mud is recirculated to the drill pipe.

When the hole is completed, the drill pipe is withdrawn and the casing placed. The drilling mud is usually left in place and pumped out after the casing and screen are positioned. The annular space between the hole wall and the casing is generally filled with cement grout in non-water bearing sections but may be enlarged and filled with gravel at the level of water-bearing strata.

For normal field production holes and normal exploratory work, the balance of advantage lies with the percussion unit; for multiple holes and very accurate exploratory drilling, particularly on accessible sites, a rotary unit will generally be found more useful.

Drilling wells is very specialized work, requiring considerable experience. This type of well construction should not be attempted without careful consultation with competent well-drilling firms or consulting engineers. Many governmental agencies have had sad experiences not only in attempting to purchase equipment and organize drilling crews, but also in contracting drilling firms without first investigating the firm and without being thoroughly acquainted with the problems involved.

Those constructing wells for community water-supplies will sooner or later be required to judge the possibility and practicability of drilling. Before any kind of recommendation is made, a thorough study of the problem with reference to local conditions must be carried out. It should be remembered that, without, previous drilling history in the area, any attempt is a gamble, even though geological studies indicate the contrary. In rural areas not easily accessible for drilling equipment, this method should be employed only after others have failed, and then only when careful investigation by experienced people indicates a good possibility of success.

EVALUATION OF VARIOUS TYPES OF WELLS:

TYPE OF WELL	RANGE OF PRACTICAL DEPTHS	DIAMETER	ADVANTAGES	LIMITATIONS
DUG	0-250 feet	3-20 feet	Inexpensive; only simple hand tools required	Susceptable to seasonal water table fluctuations and surface water contamination; Slow, tedious penetration rate
BORED	1-100 feet	2-30 inches	[same general characteristics as dug wells, but can penetrate further into the water-bearing formation]	
DRIVEN	0-50 feet	1 1/4-2 inches	Simple and inexpensive; not seriously affected by water table fluctuations; Rapid means of construction.	Impossible in soils with large boulders.
JETTED	0-100 feet	4-12 inches	Not seriously affected by water table fluctuations; rapid and efficient means of construction	Requires a source of water and a pressure pump
DRILLED	0-1000 feet	4-24 inches	Increase chances of reaching sound water source: little risk of surface contamination	Requires complex, expensive equipment.

I-B PRINCIPAL METHODS OF WELL CONSTRUCTION

LESSON NO. 1

LESSON OBJECTIVE: Describe and illustrate the general methods of well construction and the construction equipment required for each type of well.

TOPIC	INSTRUCTIONAL PROCEDURE	SUPPLEMENTAL MATERIALS / RELATED READING
Principal Methods of Well Construction	1) Identify the <u>five</u> methods of well construction: DUG BORED DRIVEN DRILLED JETTED Mention that wells are classified according to method of construction employed.	
	2) Describe general characteristics of each type of well: range of depth; diameter of hole; brief mention of construction method; difficulty of construction, etc.	Hand cut chart illustrating various types of wells
Well Construction Equipment	1) Secure samples of well construction equipment.	
	2) In a field exercise demonstrate the procedures to follow in using various pieces of equipment .	Field demonstration site; well construction equipment.
	3) Provide opportunity for all trainees to experiment with various types of equipment. While handling equipment, have trainees thinking about the situations under which each type of construction method would be most appropriate.	

I-B PRINCIPAL METHODS OF WELL CONSTRUCTION

LESSON NO. 2

LESSON OBJECTIVE: Introduce criteria used in evaluating relative merits of each type of well: summarize the advantages and limitations of each type of well.

TOPIC	INSTRUCTIONAL PROCEDURE	SUPPLEMENTAL MATERIALS / RELATED READING
Criteria used in selecting type of well to be constructed.	1) Based on field exercise in the last lesson, list personal observations of trainees.	
	2) Summarize their comments by indicating that there are <u>five</u> key factors used in selecting the type of well best suited for a given situation. These include: a. characteristics of sub-surface strata b. seasonal fluctuations of water levels c. sanitary protection desired d. type of equipment required 3. ease of construction.	
	3) Discuss each type of well in regard to the five factors above.	Matrix sheet comparing type of well with well construction criteria
	4) Summarize the advantages and limitations of each type of well.	

SECTION I-C

GENERAL SPECIFICATIONS FOR WATER WELL CONSTRUCTION

OVERVIEW:

Locating ground water is not a difficult task. When the PCV's reach their assignments, many will find wells already built. But, in the vast majority of cases these wells will be contaminated and responsible for much disease and sickness in the village. Generally, the well will be contaminated because no precautions were taken to guard against unsatisfactory water entering the well.

This section defines the general precautions that must be followed in constructing a well. It is these measures that will assure a well that is free from pollutants.

These are included at this point in the training program only to introduce the need for standard construction safeguards. Reaching water is not a satisfactory accomplishment; reaching it and meeting the minimum specifications is. Throughout the construction phase, these specifications should be re-mentioned and their importance pointed out.

C. GENERAL SPECIFICATIONS FOR WATER WELL CONSTRUCTION

OBJECTIVE: Identify the general minimal specifications which should be incorporated in any adequately planned well construction program.

TASKS:

1. Recognize those construction steps requiring a statement of minimal standards.

2. Identify minimum standards for each step necessary to ensure an effective well construction plan.

FUNCTIONAL SKILLS:

1. Recognize those planning requirements needed prior to constructing a well.

2. Identify the minimum standards which should be part of any well construction plan.

3. Recognize the lack of acceptable procedure when such a situation exists.

TERMINAL PERFORMANCE TESTS:

1. Given a number of illustrations (actual field illustrations, if possible), be able to evaluate procedures being used as either "permissive" or "unacceptable", identifying the approved standard on which the discrimination is based.

2. Given a description of a water well and its environment, indicate which aspects of the well meet minimum specifications and which don't.

GENERAL SPECIFICATIONS FOR WATER WELL CONSTRUCTION

It must be remembered that constructing a well properly first requires some careful planning. Without prior planning, problems of contamination, unnecessary expense, and unsatisfactory water supplies are all within the realm of possibility. The following suggested specifications are designed to lessen the threat of an unsatisfactory well.

LOCATION The well should be constructed in an accessible location which is not subject to folding, and at distances from potential sources of pollution not less than those listed below.

Suggested Minimum Distances Between Sources of Pollution and Water Well+

Septic Tank	50'
Sub-Surface Disposal Field	100'
Sand Filter	50'
Leaching or seepage pit or cesspool	150'
Chlorine Tank	50'
Pit Privy	100'
Animal Pens, Barns, Silos	100'
Drains, Ditches, House Foundation	25'

DEPTH Depending on the type of well, and the use of the water, effort should be made to reach a depth greater than 20 feet below the ground surface.

CASING All joints must be watertight to prevent contamination. By using standard drive-pipe couplings and ample full-threaded joints, or by proper welding, all joints should be sound

CONSTRUCTION Described in detail elsewhere in this manual, it is important to take care in sealing off, as far as practicable, water-bearing formations that are or may be polluted. The well should be constructed so that no unsealed opening will be left around the well. Prior to use, the well should be cleared of all excessive sand, silt and turbidity to assure maximum yield.

+ As the porosity of the surrounding soils increases, so should the minimum distance.

GROUTING

General cement grout, should be installed as a protective casing to a depth of at least 10 feet. Grouting prevents the entry of contaminated surface water into the well. Within the water-bearing formation (for dug and bored wells) the space between the casing and undisturbed soil can be backfilled with gravel.

YIELD TEST

Before being put into use, the well should be tested for yield and drawdown for at least 4 hours duration. The test pump should have a capacity at least equal to the pumping rate at which it is expected the well will be pumped during its usage. The test pump should be installed to operate continuously until the water level has stabilized and, at this point, the yield and drawdown determined. Periodic water level observations shall be made during the drawdown and subsequent recovery periods. A minimum sustained well yield of 5 gallons per minute shall be obtained. (Yield and drawdown are discussed in Section I-E)

DISINFECTION

The well should be pumped until clear and then disinfected as explained in Section I-E.

CAPPING AND WELL SEAL

Temporary capping of the well until pumping equipment is installed is suggested to reduce the threat of contamination. A well seal is also necessary to insure a tight junction between the well casing and the piping or equipment installed to prevent pollution from entering the well at the upper terminal.

I-C GENERAL SPECIFICATIONS FOR WATER WELL CONSTRUCTION

LESSON NO. 1

LESSON OBJECTIVE: Discuss the need for establishing minimum standards for well construction at each construction step involved.

TOPIC	INSTRUCTIONAL PROCEDURE	SUPPLEMENTAL MATERIALS / RELATED READING
Need for establishing Construction Guide lines	1) Identify three negative outcomes possible with a lack of proper planning: Contamination or pollution Unnecessary expense Unsatisfactory water supplies 2) Cite examples illustrating how improper planning could result in one of the above as an undesirable outcome.	
Rules for Construction	1) Identify the steps in well construction that are critical in assuring a properly constructed well... Site selection Depth Casing Construction Grouting Yield test Disinfection Capping and well seal Permanent record keeping Water testing 2) Discuss the minimum requirements for each item above, and the reasons for establishing them. 3) In a field observation point out the practice (or malpractice) of the guide lines described above.	Actual examples of wells, preferably in varying stages of construction.

SECTION I-D

WELL CONSTRUCTION--EQUIPMENT, TOOLS, TECHNIQUES, AND PROBLEMS

OVERVIEW:

With a general background on well construction, how ground water occurs, and the guidelines that must be followed in constructing a well, the PCT is ready to construct a well.

This section describes in detail the procedures to follow in constructing various types of wells. Although the ideal situation would call for each PCT constructing each type of well, the limitations of time make this impossible. One of two instructional procedures may be followed:

(1) Have different "crews" construct different types of wells. Although everyone would not have the same experience, all could have the experience of building one type while observing and comparing the construction of other types.

(2) Have all trainees work on the same type of well. If the in-country program has definitely established the type of well to be constructed, the training time should be spent in having all PCT's become as experienced as possible in that type of well construction program.

All trainees, grouped into "crews", should be responsible for all phases of the construction project: site selection, material, acquisition, tool procurement, and personnel organization.

D. WELL CONSTRUCTION -- EQUIPMENT, TOOLS, TECHNIQUES, AND PROBLEMS

OBJECTIVE: Construct a well under supervision, preparing in advance a plan which identifies the following: material and tool requirements; dimension of the well; method of construction (step-by-step); approximate costs.+

TASKS:

1. Prepare an implementation plan for the construction of a well.
2. Construct the well as planned, reporting daily progress, problems and solutions.
3. Write an evaluation of the project, indicating what additional measures should have been considered in the initial plan.

FUNCTIONAL SKILLS:

1. Describe the five methods of well construction and conditions most suitable for each method of construction.
2. For each type of well, list the following: steps involved in construction, material and tool requirements, dimensions, and approximate costs.
3. State the relative advantages and limitations of each type of well.
4. Prepare a well construction plan which reflects a knowledge of scheduling techniques and resource allocation.
5. Set up a well construction site, including site preparation, personnel organization, material acquisition and tool procurement.
6. Identify problems usually associated with the method of well construction being considered and the appropriate corrective action usually taken.
7. Satisfactorily perform each of the tasks involved in constructing a well.
8. Make minor repairs to inoperative construction tools.

+The type of well constructed during the training program will depend largely on the nature of the program to be implemented overseas.

TERMINAL PERFORMANCE TESTS:

1. Prepare a written construction plan for each type of well, including: advantages and limitations; steps involved in construction; material and tool requirements; personnel requirements; anticipated problems -- corrective action; approximate cost; implementation schedule.

2. Based on the type of well to be constructed overseas, select materials and tools necessary for constructing a well; proceed to construct the well as planned in Test #1 (above).

3. Given a number of problems at the construction site, simulated by an instructor, perform the appropriate corrective actions.

4. Given a number of parts in need of repair, satisfactorily repair each item, using only resources that will be available under normal field conditions.

DUG WELLS

When a big well-construction program is to be carried out within a large rural area or country, it is of great importance that methods and equipment be standardized as far as possible so that the initial training of the crews will enable them to build similar wells in different areas and under different circumstances without constant supervision. Certain features of the work must be adapted to different conditions-e.g., the thickness and reinforcement of the linings must vary according to the type of ground encountered, and the well intake (that part of the well through which the water enters) must suit the local conditions--but, in general, the basic methods, materials, and dimensions should remain as constant as possible.

In the past, wells have been constructed of circular and of square sections; but the advantages of economy and strength are so overwhelmingly with the former that virtually all wells constructed now are circular in plan.

Diameter

The first consideration, then, in designing a well is its diameter; neglecting for the moment large-diameter wells built for special purposes, the size of a completed well represents a compromise between economic and practical considerations. It has been found that the cost of a lined well varies almost exactly with its diameter, taking into account the increased thickness of lining necessary in a larger well. The minimum diameter is limited by the room available for a man or men to work; experiments show that a diameter of about 3 1/4 ft. is necessary for one man and about 4 1/4 ft. for two men. It has been found that the efficiency of two sinkers working together is more than twice that of a single man, and consequently a 4 1/4 ft. diameter is a convenient standard size. Other considerations affecting this decision are the greater natural ventilation of the larger hole, the more efficient size of the hoisting buckets and other equipment which can be used in it, and the additional room for concreting operations and insertion of caisson rings. On the other hand, an increase in diameter beyond 4 1/4 ft. does not appear to give any great constructional advantage.

Lining

With the exception of wells sunk into consolidated rock, a lining of permanent materials is always necessary. This lining serves several purposes. It is a protection during construction against caving and collapse; it retains the

walls after completion; it also acts as a seal to prevent polluted surface water from entering the well, and enables the aquifer from which the supply is to be obtained to be isolated and protected from pollution. It acts as a foundation and support for the well-top and any pump or other mechanism which may be fitted on completion, and it serves as an impervious lining to the storage reservoir which such a well is designed to provide.

From both a practical and an economical point of view, it is better that the permanent lining be built into position as construction proceeds, thus avoiding the expense of temporary supports and the danger of collapse which may occur when the temporary work is removed to make way for the permanent lining.

The various ways of lining wells may be classified under two heads: those in which the wells are built into their final position as work proceeds, and caissoning methods, in which the lining is built above its final level and sunk as a completed unit to its final position. It will usually be found that a combination of these two systems will produce the most effective results.

Although many materials are used for lining-masonry, brickwork, steel, and timber-for widespread use there are very great advantages in plain or reinforced concrete.

Masonry and brickwork are widely used in many countries and can be very satisfactory if conditions are right. In bad ground, however, they both suffer from having a low tensile strength, and unequal pressures can make them bulge or collapse. Building with these materials is slow, particularly in the confined working room of a well; and a greater thickness of wall is required than with concrete, as a result of which a correspondingly greater excavation is necessary. There is always a danger of movement during construction in loose sands or swelling shales before the cement has set; similar movement is prevented in a concrete lining by leaving the form in place to support the lining until the concrete has attained a high strength. Skilled masons, suitable stone, or well-fired bricks may not be readily available, whereas it is relatively easy to train unskilled workers to place concrete, and sand and gravel can usually be found within reasonable distance of a well site.

Steel linings are rarely used, because of their high cost, short life, and (except with very heavy sections) liability to bend. Timber is a most unsuitable material on account of its short life and its liability to rot, harbor insects,

and taint the water. Also cross-members inside the well--necessary for strength--reduce the effective diameter; and it is almost impossible to make a lining sufficiently impervious, even when new, to keep out polluted surface water.

Concrete, on the other hand, can be placed quickly by unskilled laborers, provided that they are adequately supervised; requires only a small thickness (3 in. in good ground to a maximum of 5 in. in bad); can be precast into caisson rings at the site, on the surface, in simple moulds; and makes a continuous, impervious lining, strong enough to support itself and any superstructure required. It adapts itself to the face of the excavation and can be made porous opposite the producing aquifer to act as an entrance screen.

Construction

In normal ground (i.e., unconsolidated formations without any special hazards such as swelling shales or running sands) the shaft is sunk from ground level to the top of the aquifer by the method known as "alternate sinking and lining". The hole is excavated and trimmed to a diameter of 4 1/2 ft. and a depth of about 15 ft.--less if the ground is at all weak or if the ground-water level is less than 15 ft. deep. At that depth a curb or shoe is undercut into the side of the well about 1 ft. deep all around; and, after the reinforcing rods have been placed into position, the section of the well is concreted by pouring behind metal shutters, which are added one by one from the bottom of the excavation as the lower section is filled. When this operation is complete, the result is a section of reinforced concrete lining 3 in. thick, 4 ft. in internal diameter, supported not only by its friction against the surrounding soil, but also on a reinforced concrete ring of 6 1/2 ft.-outside diameter.

Leaving the metal shutter in place, a further section of 15 ft. or less is excavated below the first and is in turn curbed and concreted, leaving 4 in. below the first curb to be hand-built with small concrete blocks joined with cement and mortar. Sinking is continued in this way until the water-bearing strata are reached; and, in effect, the well now consists of a series of self-supporting cylinders from the surface to the aquifer, with an impervious joint between each.

From this depth onward the caissoning method is adopted. The caissons have been cast in moulds on the surface during the sinking and lining operation and should now have attained their full strength. They consist of concrete cylinders each 2 ft. high, 3 ft. 10 in. in external diameter, and 4 1/2 in. thick, with provision for four lonitudinal bolts.

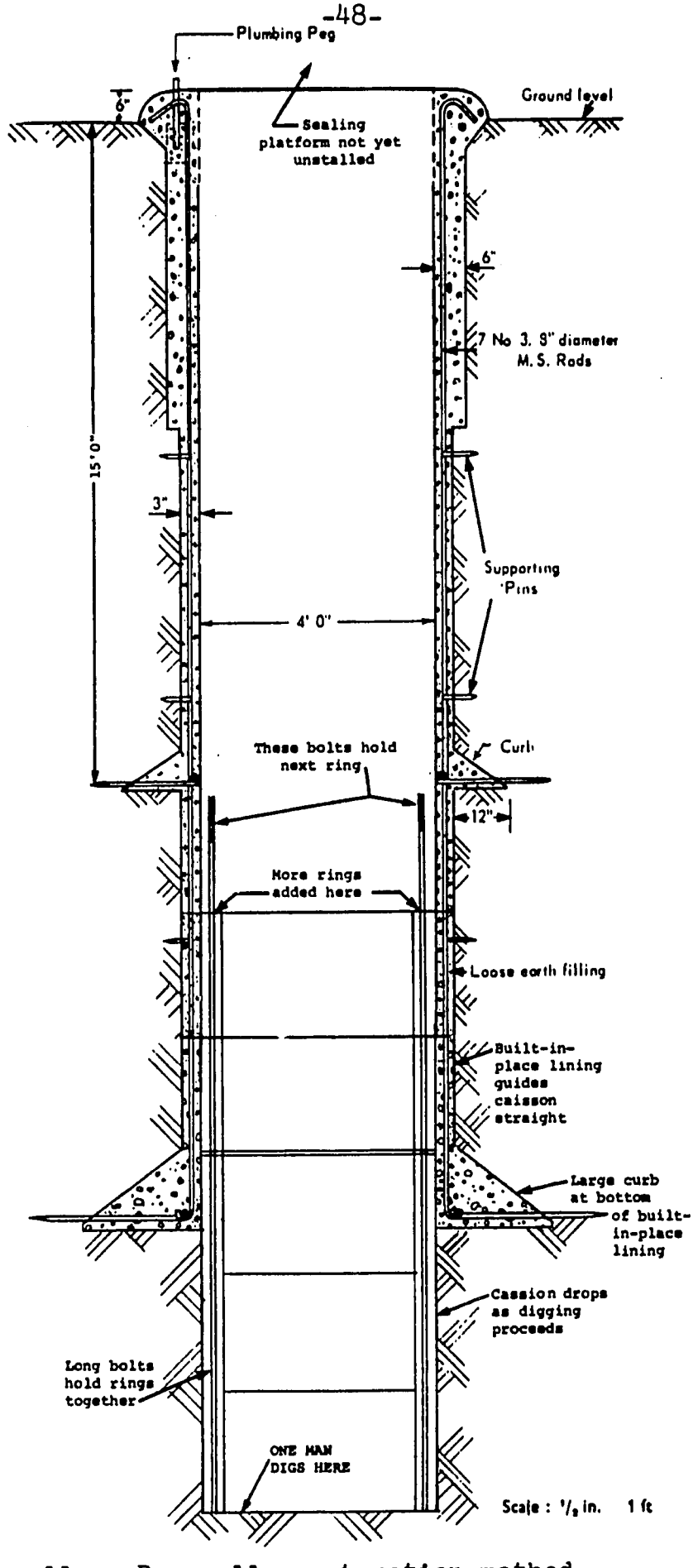

Fig. 11 Dug well construction method

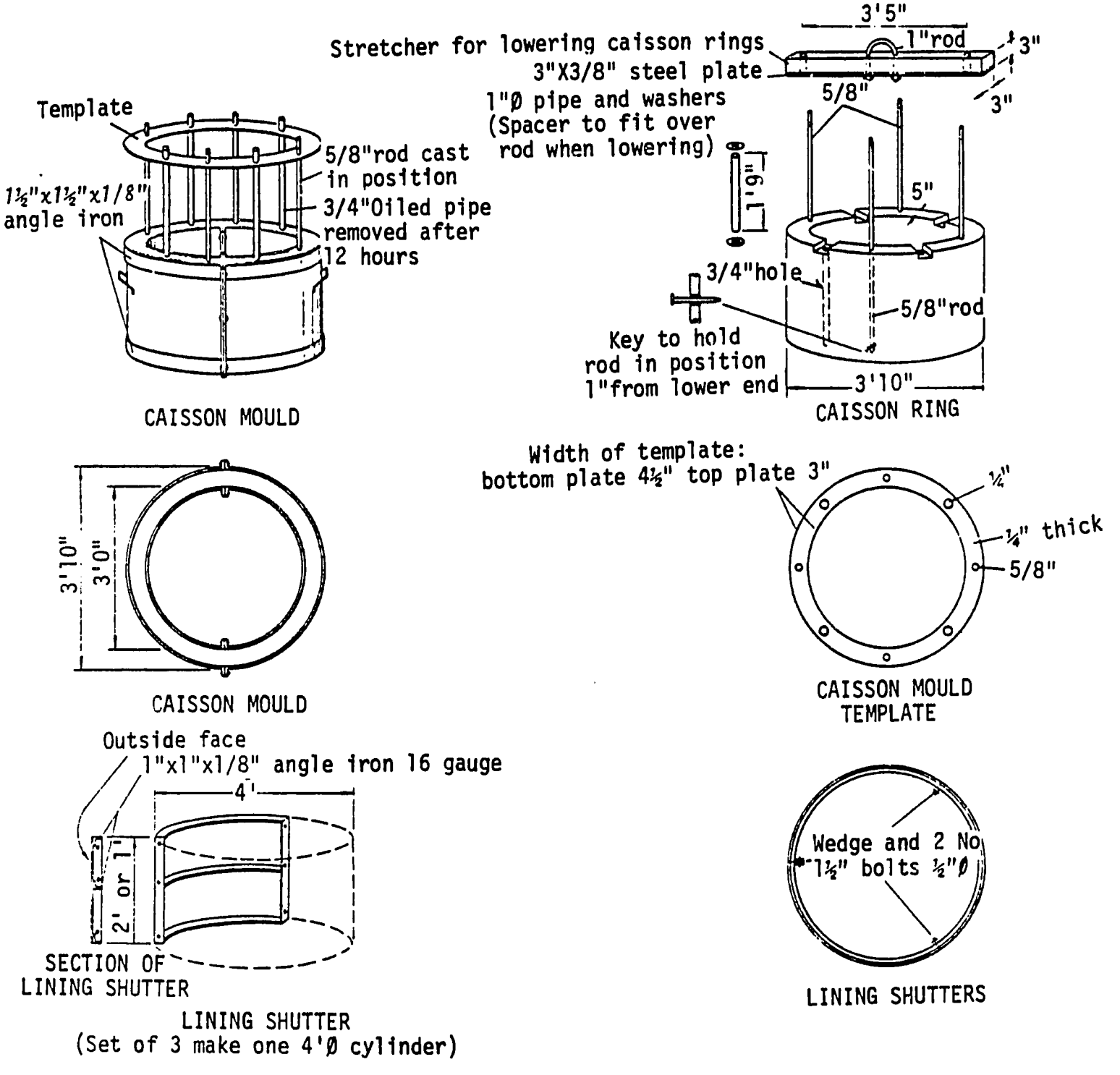

Fig. 12 Caissons and lining shutters

These caisson rings are lowered singly into the lined well, and each is fastened by four 5/8 in. diameter bolts to the ring below. A second cylinder is thus assembled vertically inside the first lining, but free to move downward as soil is excavated from below. One man only can work within the caisson ring, which has an internal diameter of 3 ft. 1 in.; and the depth to which the caisson can be sunk depends on the depth of water which cannot be removed by bailing. When the water-bearing formation consists of sand and gravel, or other loosely bound materials, pumps should not be used at this stage of the sinking since, if too much water is extracted, caving generally takes place as the water-bearing materials are drawn into the well from outside the caisson.

Obviously, with a large well-sinking program, work must go on all the year round, and wells frequently have to be sunk when the water-table is high. All programs should allow for deepening to take place when the water is at its lowest, and the method described above lends itself particularly to this. It is customary to leave a number of caisson sections projecting upward into the lined portion of the well so that in the dry season the team has only to continue excavation to the appropriate depth when the caisson drops into its final position.

According to the nature of the aquifer, a well may be designed to admit water either through the walls or through the open bottom. When the walls are used--and this is the more usual method--the caisson rings opposite the aquifer are made of porous concrete, which is described below. In porous-walled wells the bottom is frequently concreted to prevent upward movement of soil and to facilitate cleaning.

Making Porous Concrete

To make concrete porous, sand is omitted; in other words, instead of a mixture of stone, sand, and cement, it is made of stone and cement only. Because of the omission of sand, this material is often referred to as "nofines" concrete. In normal concrete, the sand fills the interstices between the stones; in porous concrete, these interstices are left as voids after the mixing water has disappeared, and these voids act as waterways through which percolation can take place.

Obviously, this cannot happen without some loss of strength, as the individual stones composing the aggregate of the concrete are bonded together only at the points where they touch each other. Consequently, special precautions have to be taken in mixing, placing, and handling articles made of this material.

To start with, the stone used must be absolutely clean and free from any clay or loam (with porous concrete it is doubly important). Secondly, the stone must be carefully graded. A usual specification is that all stone must pass through a 3/4 in. sieve, but none should pass through a 3/8 in. mesh. A 4:1 stone; cement ratio is usual. The mixture should not be too wet; the minimum water content consistent with workability must be aimed for. Tamping should not be excessive; moulds must not be struck too soon; and, above all, curing must be thorough. For at least one week,--preferably for two--concrete must be kept wet and shielded from the sun. In the case of heavy caisson rings, at least three weeks should elapse between pouring and lowering into the well. When these rings have to be transported any distance to the well location, extra circular reinforcement is necessary. Five rods instead of the usual two are recommended, with the top and bottom rods not more than 2 in. from the ends of the cylinder.

If all these precautions are observed the porous concrete will be found to be as strong in use as normal concrete, and the convenience and efficiency of its use will be well worth the effort.

Occasionally, circumstances may make it desirable to draw water from the bottom only; an instance of this is when the aquifer is of very fine sand which would be drawn into the interstices of the porous concrete and either cause caving by the removal of the outside material, or clog the walls and prevent water from entering. In such a case, the caisson is made of normal concrete throughout; and, when the final depth has been reached, it is usual to place a filter of graded layers of gravel in the bottom to prevent the sand from being drawn upward into the well with the water. Requirements vary with circumstances, but a common gravel filter of this nature consists of 6 in. layers of 1/4 in., 3/8 in. and 1/2 in gravel, the smallest at the bottom, with about 3 in. of 3/4 to 1 in. gravel to protect the surface of the filter. Each layer is carefully placed by hand and levelled off before the next size is added.

For further detailed instructions and/or equipment and tool requirements, refer to Wagner, E.G. and J. H. Lanoix, Water Supply For Rural Areas and Small Communities, Geneva (World Health Organization), pp. 290-294.

DRIVEN WELLS

Driven wells are constructed by driving into the ground with a hammer a pipe at the lower end of which a drive-well point has been attached. These wells are usually from 1 in. to 4 in., most commonly 1 1/4 in. in diameter. Because these

wells can be easily driven, pulled out, and put down again elsewhere, they are very popular in many parts of the Western Hemisphere, South-East Asia, and the Orient.

They cannot be put in hard, solid stone or hard-pan strata, or in heavy beds of clay; but they can be successfully driven through compact soils and even through chalk. As in the case of bored wells, when boulders and rock are met it is best to pull up the pipes already in the ground and to try a new spot a little distance away.

The depth of ground water is another important consideration in the selection of driven wells in a given locality. In individual installations where the ground water is very shallow, say within 25 ft. of the ground surface, the pump cylinder is usually attached directly to the top of the rising pipe. The total depth of such wells seldom exceeds 33-50 ft.

Technique

Although the methods used for driving wells vary considerably in their details, a typical technique of installation may be briefly described as follows.

The driving clamp is fastened to the drive point or perforated pipe. The monkey or hammer is slipped on to the pipe above the clamp, and the pulley bar is inserted in the pipe. A rig made of local wooden or bamboo poles may be set up for holding the pipes in a vertical position. A small hole 20-32 in. deep is dug in the ground by means of a crowbar at the selected spot.

Driving begins by pulling on the ropes, raising the monkey and, then, letting it fall on the clamp. Care must be taken at all times to keep the pipe vertical. This may be checked by means of a plumb line. When the clamp reaches ground level, driving is stopped; the clamp is loosened and raised about 12 in. if the soil is hard, 20-24 in. if driving is easy through soft soil; and operations are resumed. When the first pipe has penetrated the ground to such a depth that there is no more headway for the monkey to work, a new length of pipe is added. To ascertain whether water has been reached, the plumb line is frequently lowered in the pipe. This also helps to determine whether earth or sand has penetrated to any appreciable extent in the pipe through the screen or perforations. When this happens, the dirt may be removed by means of small cleaning out tubes and a hand-pump.

After the water-bearing stratum has been reached, it is advisable to continue driving operations to such a depth

that the well will never dry up, even in dry seasons. The pump may then be installed and the well completed.

To start the pump, it is necessary to fill the suction column with clean water and to exhaust the air which is in it. The water coming out of the well will be muddy at first, but will clear up after an hour or so of vigorous pumping.

In order to ensure a steady flow of water in the future, it is necessary to "open" the water-bearing formation in the vicinity of the drive point by removing its content of fine earth or sand particles. When the ordinary pitcher pump is used, this may be achieved by raising the handle high for a brief moment, thus allowing the water in the suction column to drop suddenly, and then resuming the pumping immediately and vigorously. With this sudden drop, the pipe's water rushes out of the screen at the bottom of the well and shakes and disturbs the fine particles surrounding the pipe. Such action causes fine particles to be removed when pumping is resumed, and the well water will be seen to remain muddy for a while. This process should be repeated several times before the well is considered to have been completed.

Various other methods may be used for developing or finishing wells in sand and gravel formations. One of the simplest and most common methods is over-pumping, i.e., creating a draw-down much in excess of that which will be maintained in future operation. This system, while not fully effective as a development procedure, has the advantage of clearing fine particles from the well and its immediate surroundings and of providing useful data with respect to the capacity of the well. It may be used only on small, low-capacity wells driven into fairly well-graded formations. Over-pumping should not be done and may even be detrimental when the formation is uniformly fine and made of silt or clay, because it may result in considerable caving of the ground surrounding the well. Other methods of development are discussed later in this section.

Table 1 Identification of Formation Being Penetrated

Type of formation	Driving conditions	Rate of descent	Sound of blow	Rebound	Resistance to rotation
Soft moist clay	Easy driving	Rapid	Dull	None	Slight but continuous
Tough hardened clay	Difficult driving	Slow but steady	None	Frequent rebounding	Considerable
Fine sand	Difficult driving	Varied	None	Frequent rebounding	Slight
Coarse sand	Easy driving (especially when saturated with water).	Unsteady irregular penetration for successive blows	Dull	None	Rotation is easy and accompanied by a gritty sound
Gravel	Easy driving	Unsteady irregular penetration for successive blows	Dull	None	Rotation is irregular and accompanied by a gritty sound
Boulder and rock	Almost impossible	Little or none	Loud	Sometimes of both hammer and pipe	Dependent on type of formation previously passed through by pipe

It is sometimes necessary to lift the pipes or to withdraw them completely from the ground. This happens, in the first instance, when they have been driven by mistake beyond the water-bearing stratum. In other cases, the soil may prove too compact, or boulders may have been encountered. Finally, no water may have been found within the permissible limit.

The pipe can readily be withdrawn by disassembling the monkey and pulley bar. By means of a crowbar or strong wooden log passed below the clamp and used as a lever, it is possible to pry the pipe out of the ground. The monkey may also be used in a reverse direction for the same purpose.

Tools and Materials

Well point and driving cap...usually obtainable from the U.S. for about $10, through mail order houses
Pipe...1 inch diameter
Heavy hammer and wrenches
Pipe compound
Special pipe couplings and driving arrangements are desirable but not necessary

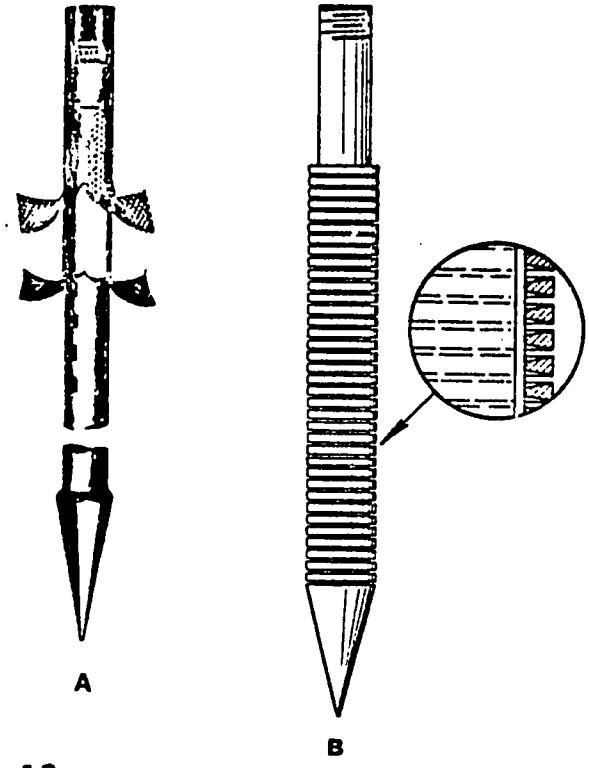

Fig. 13

A - Common type of screen for well point. It is reasonable in cost and, in a good water-bearing formation, it can give good results. Over-pumping is apt to plug up the screen

B - An effective type of well point. It will not plug easily but is more expensive than common screens. With proper development, large quantities of water can be obtained through such well points.

BORED WELLS

A simple method of construction of small-diameter wells of shallow depth is the use of an earth borer, also called earth auger (see Fig. 14). First, a small hole 12-20 in. deep, and large enough to accept the borer, is dug in the ground with an ordinary pick or crowbar. From then on, boring proceeds to the desired depth.

In areas where a simple earth borer or earth auger works (i.e. alluvial plains with few rocks in the soil), and where there is a permeable water-bearing layer, 50 feet or less from the surface, the tubewell will probably work well.

It is intended for the individual family or small group of families and generally does not have the capacity for a large group. Since there is only a small hole to dig and a small amount of purchased material involved, the tubewell is quite inexpensive to install.

Because of the small diameter of these wells, their storage capacity is limited. Therefore, their yield will depend largely upon the rate with which water from the aquifer flows into the well. From a saturated sand layer the flow is rapid. Inflowing water quickly replaces the water being drawn from the well. A well penetrating such a layer seldom goes dry. However, even when water-bearing sand cannot be reached, the requirements of the household may be such that a well with even a limited storage capacity can be utilized.

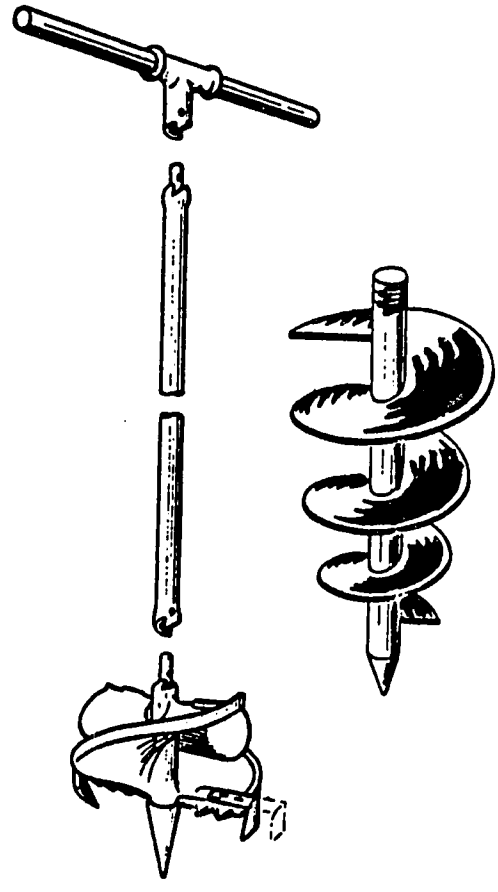

Fig. 14 Typical Boring Tools

The hole is dug as deep as possible into the water-bearing strata. The diggings are placed near the hole to make a mound, which later will serve to drain spilled water away from the well. This is important since backwash is one of the few sources of contamination for this type of well. The entire casing pipe below water level should be perforated with many small holes. These should be no larger than 3/16"

in diameter at the maximum, Holes larger than this will allow coarse sand to be washed inside. This will plug up the well. Fine particles of sand, however, are expected to enter. These should be small enough to be pumped immediately out through the pump. This keeps the well clear. It may be that the first water from the new well will bring with it large quantities of fine sand. When this happens, the first strokes should be strong and steady and continued until the water comes clear.

Where soil conditions permit, the bored well will provide adequate water for a small user, is easy to install, and costs considerably less than large diameter wells.

Tools and Materials

Earth auger
Coupling to attach to 1" drill line (see other entries on earth augers)

Standard weight galvanized steel pipe
Four - 10' sections of 1" diameter (2 pieces have threads on one end only; others need no threads.)

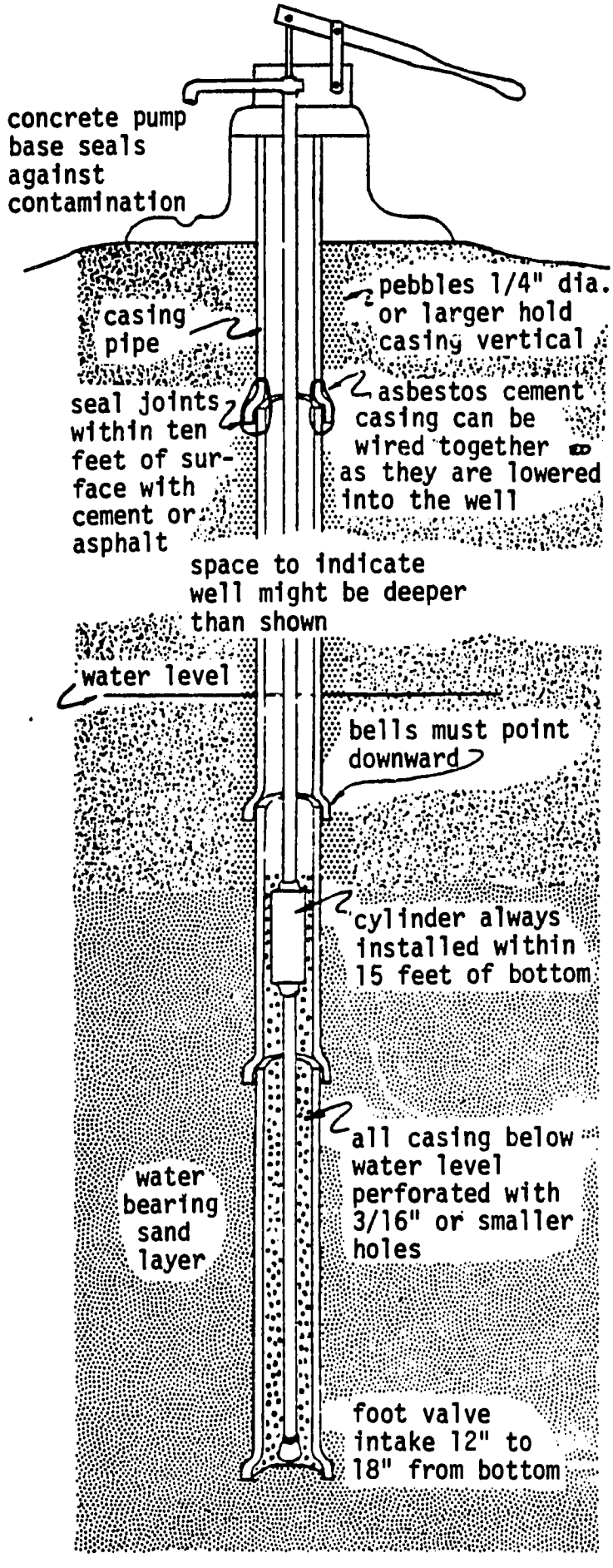

Figure 15 Tubewell With Casing Pipe

Standard weight galvanized steel pipe
Two - 3 1/2' sections of 1" diameter
(1 piece has threads on one end only; the other needs no thread.)
(Above sections for drill line.)

Two - 2' sections of 1" diameter
(both threaded one end only)
(Sections for turning handle.)

Four - 1' sections of 1 1/4" diameter
(Sections for Joint A.)

One - 9" section of 1 1/4" diameter
(threaded one end only)
One - 14" section of 1 1/2" diameter
(threaded one end only)
One - 1 1/4" to 1" reducer coupling
One - 1 1/2" to 1" reducer coupling
(Sections and couplings for Joint B.)

One - 1" T coupling (turning handle)

Eight - 3/8" diameter hex head steel machine bolts
1 3/4" long head nuts.

Two - 3/8" diameter hex head steel machine bolts
2" long with nuts.

Nine - 3/8" steel hex nuts

One - 1/8" diameter countersink head iron rivet 1/2" long

One - 1/16" sheet steel 3/8" x 1"
(To make toggle bolt.)

Drills - 1/8", 13/32", 13/16"

Sand
Gravel
Cement
Device for lowering and placing casing.
Drilling rig - see "Tubewell Boring"
Foot valve, cylinder, pipe, hand-pump.
Casing pipe (from pump to waterbearing layer to below minimum water table.)

Construction

As the auger penetrates the earth, it fills with soil. If the spiral type of auger is used, the loosened soil or gravel rises upward. From time to time the borer is pulled out of the hole and emptied. As the hole gets deeper, more sections of drilling line are added to extend the shaft. Joint A in Figure 16 below describes a simple method for attaching new sections.

By building an elevated platform 10 to 12 feet from the ground, a 25 foot long section of drill line can be balanced upright. Longer lengths are too difficult to handle. Therefore, when the hole gets deeper than 25 feet, the drill line must be taken apart each time the auger is removed for emptying. Joint B facilitates the operation. See Figure 17.

Joint A has been found to be faster to use and more durable than pipe threaded connectors. The pipe threads become damaged and dirty and are difficult to start. Heavy, expensive pipe wrenches get accidentally dropped into the well and are hard to get out. By using a sleeve pipe fastened with two 3/8" bolts, these troubles can be avoided. A small ten-cent bicycle wrench or the inexpensive bolts will not obstruct drilling if dropped in. Be sure the 1 1/4" pipe will fit over your 1" pipe drill line before purchase. See Figure 16.

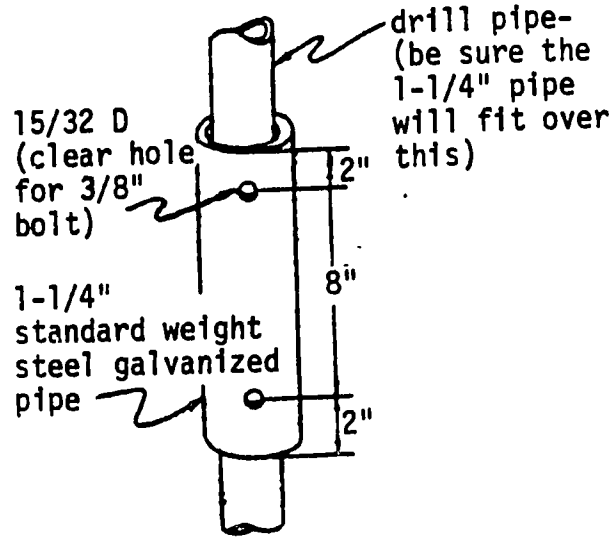

Figure 16 Joint A

When the well is deeper than 25 feet several features facilitate the emptying of the auger as shown in Figure 20. First the full auger is pulled up until Joint B appears at the surface. Then a 3/4" diameter rod is put through the hole. This allows the whole drill line to rest on it making it impossible for the part still in the well to fall in. Next remove the toggle bolt, lift out the top section of line and balance it beside the hole. Pull up the auger, empty it, and replace the section in the hole where it will be held by the 3/4" rod. Next replace the upper section of drill line. The 3/8" bolt acts as a stop which allows the holes to be easily lined up for reinsertion of the toggle bolt. Finally withdraw the 3/4" rod and lower the auger for the next drilling. Mark the location for drilling the 13/32" diameter hole in the 1 1/4" pipe through the toggle bolt hole in the 1 1/2" pipe. If

the hole is located with the 1 1/4" pipe resting on the stop bolt, the holes are bound to line up.

Sometimes a special tool is needed to penetrate a water-bearing sand layer, because the wet sand caves in as soon as the auger is removed. If this happens, a perforated casing is lowered into the well, and drilling is accomplished with an auger that fits inside the casing. A percussion type with a flap, or a rotary type with solid walls and a flap are good possibilities.

By repeatedly jamming this "bucket" into the well, sand will be removed from in front of the perforated casing allowing it to settle deeper into the sand layer. The casing prevents the walls from caving in. The first section of casing has the bell removed; at least one other section rests on top of it to help force it down as digging proceeds. The casing will settle deeper into the sand as sand is dug from beneath it. Other sections of casing must be added as drilling proceeds. Try to penetrate the water bearing sand layer as far as possible (at least 10 feet). Ten feet of perforated casing embedded in such a sandy layer will provide a very good flow of water.

Be sure to try your sand "bucket" in wet sand before attempting to use it at the bottom of your well.

Perforated casing is lowered, bell end downward, into the hole using the device shown in Figure 19. When properly positioned, the trip cord is pulled and the next section prepared and lowered. Since holes are easily drilled in Asbestos cement pipe, they can be wired together at the joint and lowered into the well.

Be sure the bells point downward, since this will prevent surface water or backwash as well as sand and dirt from entering the well. Install the casing vertically and fill the remaining space with gravel. This will hold the casing plumb. The casing should rise 1' to 2' above ground level and be surrounded with a concrete pedestal to hold the pump and drain spilled water away from the hole. The casing joints that are within 10 feet of the surface should be sealed with cement grout.

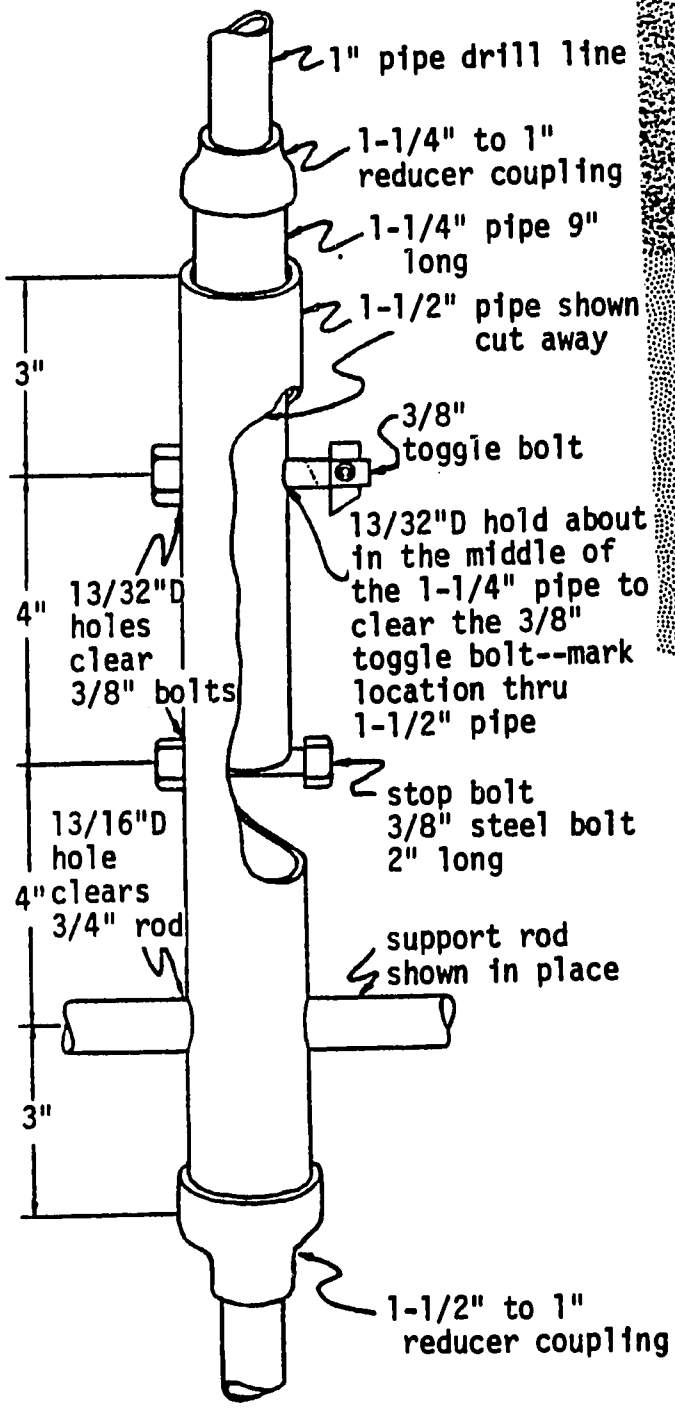

Figure 17 Joint B

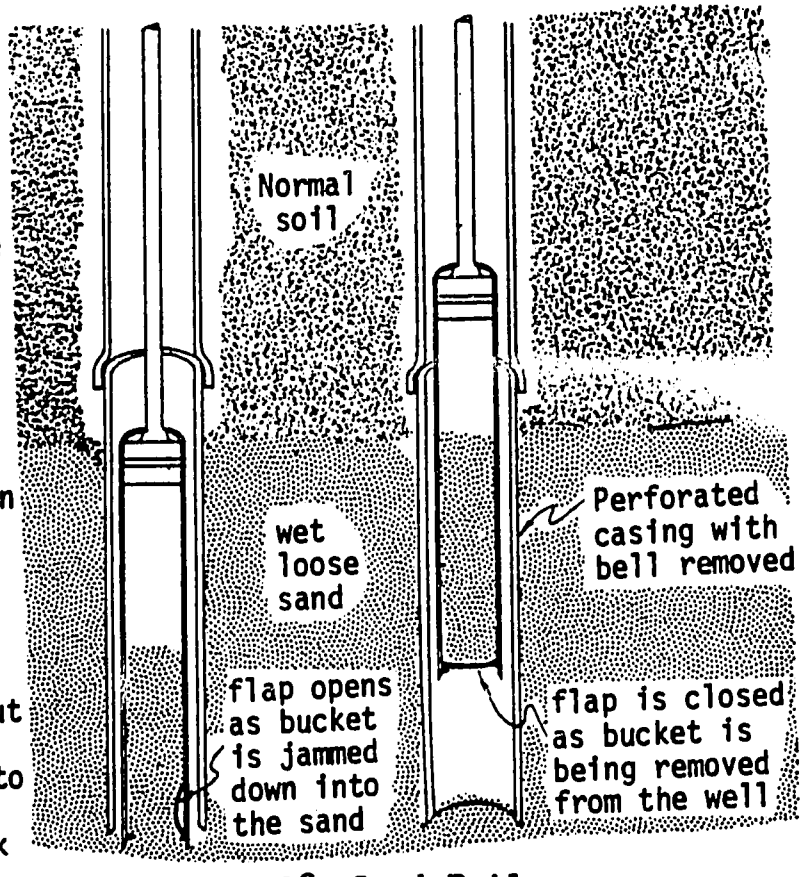

Figure 18 Sand Bailer

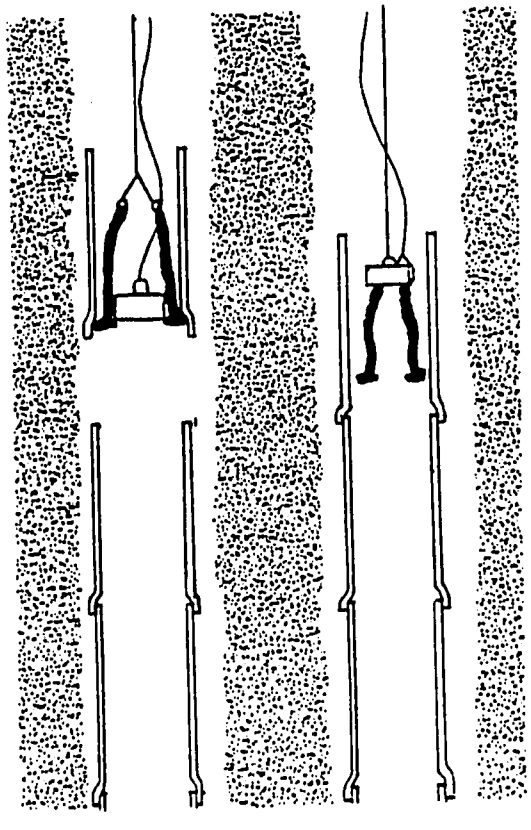

Figure 19 Casing Placer

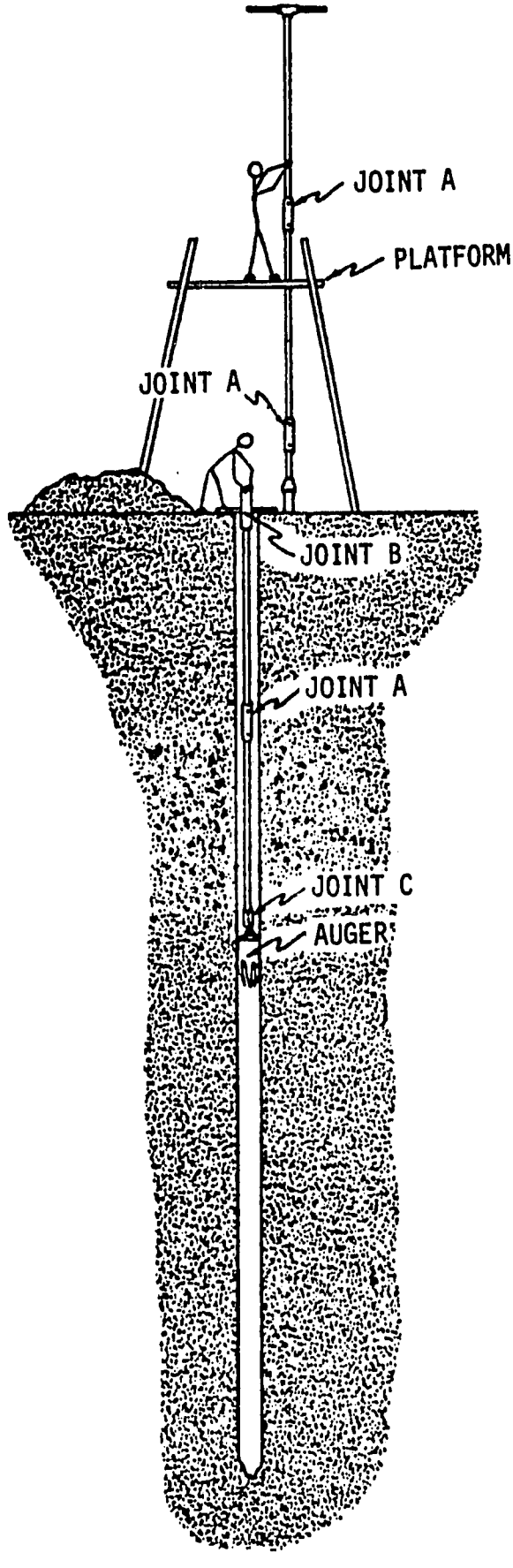

Figure 20 Tubewell Boring

JETTED WELLS

With a small amount of pumping equipment, it is possible to sink wells to considerable depths very rapidly by the jetting method. Depending on the soil and the amount of water that can be pumped a fairly large-diameter casing of 10-15 in. can be sunk 150-300 ft., thereby making it possible to install larger screens and pumps. Jetting is highly recommended for exploration and for small tube-wells, provided that plenty of water is available for sinking. The description below is for small diameter wells jetted successfully in India.

EQUIPMENT

(1) Tripod of bamboo or timber with 25 ft. of clearance
(2) Hand-operated lift and force pump (double-acting, with plunger 4 in. in diameter
(3) 4 chain-type wrenches for gripping pipes
(4) 40 ft. of high quality hose 1 1/2 in. diameter
(5) Casing pipe, boring pipe, a swivel joint, steel cutter, pulley ropes, small hand tools

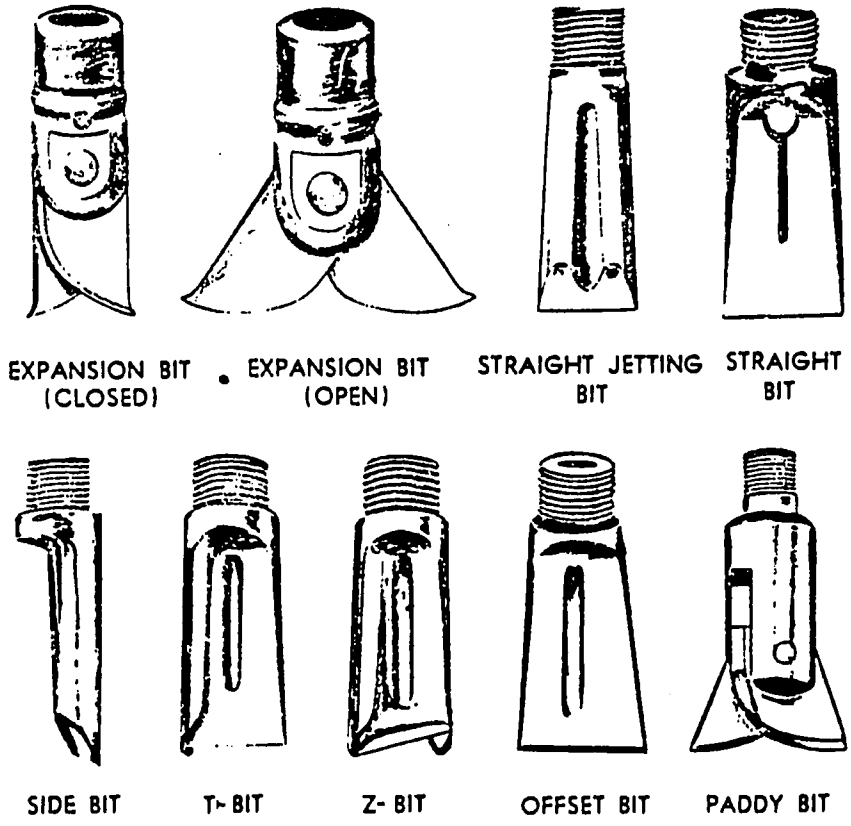

Figure 21 Bits for jetting

THE JETTING PROCESS

(1) Dig a hole 5 ft. deep over which the tripod is mounted; this gives a reasonable starting depth.

(2) Attach the cutter to one end of a 1 1/2 in. boring pipe, usually about 20 ft. in length; swivel to other end and place cutter end of pipe into the hole; suspend the pipe and swivel with pulleys from tripod (See Figure 23). The swivel joint allows the water to enter the boring pipe from the hole while, at the same time, permitting the boring pipe to revolve without leaking.

Figure 22 Tube-well Boring by Water-Jet System

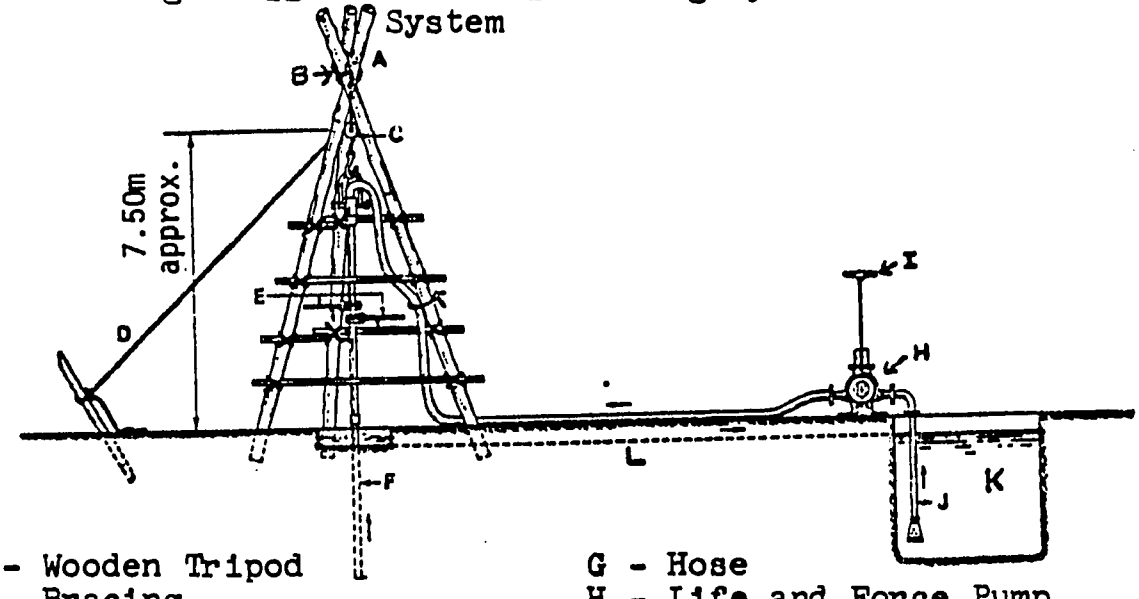

A - Wooden Tripod
B - Bracing
C - Pulley
D - Rope
E - Chain pipe wrenches
F - 1 1/2 in. diam. tube-well
G - Hose
H - Life and Force Pump
I - Operating Handle
J - Suction
K - Water reservoir
L - Surface drain

(3) The hose is attached to the force pump which pumps water from a sump excavated in the ground near the well. (The pump suction pipe must be held clear of the bottom and sides to avoid sucking up mud and sand.)

(4) Jet-boring starts as the pumpers begin to force water into the boring pipe, at which point the men with the chain wrenches begin to turn the pipe.

(5) With the pressure of the water and the twisting action, the bore pipe begins to descend, and the jetted water begins to boil up around the sides of the bore pipe. This water is full of suspended matter and is really a light mud. (The more water that can be pumped through the pipe, the faster it

will descend and the more and larger will be the suspended matter being washed out of the hole.) In a short time the first 20 ft. length of pipe will be at ground level. The swivel is removed; a second length of bore pipe is screwed on; the swivel is attached to this new length of pipe; and the pumping, jet-boring process begins again.

(6) One after another, the bore pipes are sunk until the desired depth is reached. This can be ascertained by examining the borings that are coming out of the well. When a fairly fine sand is reached, boring is stopped; but pumping continues at that level for some time to clean the whole well.

(7) Jetting water is re-used by letting the dirt and sand settle out in the sump.

SELECTION OF PROPER WELL SCREEN

The selection of the well screen for a particular well involves the choice of length, diameter, and size of openings of the screen. The screen must be fabricated of metal that will resist the corrosive effects of the water. The total area of the openings varies with the length and diameter of the screen, and the size of the openings should be such as to limit the entrance velocity to 5 feet per minute.

The proper length of screen depends primarily on the thickness of the water-bearing sand. For a relatively thin layer, the length should be about equal to the thickness of the sand. For a thick aquifer, the length of the screen should be about equal to 1/2 the thickness of the sand if near-maximum well efficiency is desired. This rule may be modified somewhat if the water-bearing formation consists of different strata, both fine and coarse. In such a case the thickness of the coarser strata should be given more consideration than the finer portion in choosing the screen length. The screen should be set in the coarser strata in completing the well. The percent of open area, or intake area, of a well screen should also influence the choice of length.

The diameter of the well screen selected usually corresponds to the diameter of the well casing. Providing a large enough space for the pump that is to be installed in the well is usually the primary factor in choosing the diameter of the well casing. The yield or capacity of a well increases with an increase in screen diameter, other factors remaining the same. However, the increase in yield is not in the same proportion as the increase in diameter. For example, doubling the diameter of a well screen will theoretically only raise the capacity of the well by about 20 percent. As a rule,

it is more important to use a larger diameter screen if the aquifer is thin. Where a long screen can be used in a thick water-bearing formation, a smaller diameter will operate efficiently. In general, if a thick aquifer is available, the yield of the well to be constructed will be increased more by increasing the length of the screen than by increasing its diameter.

The size of screen slot openings should be chosen to fit the gradation of grain sizes of the water-bearing sand or gravel. The proper selection of the size of openings is highly important in designing for maximum efficiency, because the relation between the slot size and the grain sizes of the sand influences greatly the development of the formation around the screen. If the openings used are too small, the yield of the well will be limited by inadequate development. The small openings result in too high velocity of the water passing through them, and this may cause scale or incrustation to form in the sand just outside the screen over a period of time. If the openings are too large, too much development work may be necessary and it may be even impossible to clear the well of sand. Obviously, the refinement in screen selection must be modified to some extent for application to field operations, because it is not practical to stock screens in a complete range of slot openings.

Tests and experience show that a screen slot size that will retain the coarsest 1/3 of sand or gravel in the formation in which the screen is to be installed is about right. The screen slot openings will then be large enough to let about 2/3 of the sand pass through. If the screen is to set in two strata, one fine and one coarse, each section of the screen must have openings of a different size. For example, the upper section of the screen may have small openings to fit fine or medium sand and the lower section may have larger openings to fit a stratum of mixed sand and gravel.

If the well screen is to be artificially gravel-packed, the screen slot openings should correspond to the size of the gravel employed. Tests and experience show that screen openings which will retain from 3/4 to 9/10 of the gravel are best. Thus, only a few of the gravel particles will pass through the screen openings during the development operation, which is the desired condition for gravel-pack construction.

PLACING THE SCREEN

The entire column of jet-boring pipe is removed and the cutter is taken from the end of the bottom pipe. The well

screen is attached to the first length of well pipe, and the process of lowering the pipe is repeated with pumping, but through the screen. (Naturally there is little resistance in the recently jetted hole.) The screen is open at the bottom; and, when it is in the position desired, a pre-seated plug made of lead is dropped into the pipe and closes the hole at the bottom of the well screen, sealing the bottom of the well. A well point with a closed end may also be used, although sometimes a few feet of hole may be lost while raising the jet and lowering the well point.

At this stage of the process, when water is being pumped down through the well pipe and screen, washed pebbles can be dropped into the hole around the outside of the well pipe. These are heavy enough to settle even against the upward stream of water, and the stream can be regulated to allow settlement. These pebbles of round, washed gravel help to form a gravel pack around the well, thus reducing the possibility that fine sand may get packed up around the screen and enter the well, with a consequent cutting-down of capacity. It should be added that, where sufficient sand-free water is being obtained without the attempt at gravel packing, the methods that have proved successful should be followed. Where trouble is encountered in getting water from fine-sand strata, it will be worth while to experiment with gravel packing. It is highly important that round, selected, washed material be used.

A 3/4 in. pipe is now lowered into the well pipe to the bottom, and a strong jet is pumped. This is done to clean the inside of the well pipe and screen of any possible sediment, sand, or dirt.

FINISHING THE WELL

The space between the well pipe and the earth hole should be back-filled with compacted clay or concrete to prevent contamination from reaching the water table through this space. The well is now complete, and the hand-pump is installed and operated continuously for (at least) eight hours per day for three days to clean out the jetting water.

A little hypochlorite should be introduced into the well, allowed to stand for 24 hours, and then pumped out again. A watertight platform should be constructed to complete the well.

DRILLED WELLS

In this monograph, the term "drilled well" indicates that which is constructed with machines designed and manufactured for the purpose of drilling water wells. These machines can be described as being of two general types:

(1) the percussion
(2) the rotary

The percussion drilling rig, also known as the "cable tool" rig, is the more common and more simple. It consists of a derrick and hoisting and control equipment, skid-trailer or truck mounted. The derrick serves as the elevated structure from which the drilling tools, well casing, screens, and all materials and equipment used to construct the well are suspended and manipulated. These rigs vary from the very small sizes to those which drill more than 3300 ft.

Because both the percussion and rotary drilling rigs are quite expensive, complex, and generally not available to the volunteer working in a village environment, this section will deal with only a very simple well drilling method. Should you be in a situation where expensive rigs are available, you should study other sources of information which concentrate on well drilling techniques. [1]

The simple method of well drilling described here is generally successful for drilling wells up to 250 feet in depth. A well of this type is drilled essentially by hand with a minimum of mechanization.[2] A jeep or other driving vehicle is parked with the rear end jacked up and the rear tire removed. A strong rope is fastened to the rim of the wheel and then threaded through two pulleys located on a tripod mast. The rope is tied to the end of a ten foot piece of common pipe. (Additional lengths are added as the hole deepens.) The drilling bit with cutting edges is welded to the bottom of the pipe. The pipe with the bit can be easily rotated either by welding two handles at the top or by wrapping a chain around the pipe and pulling. To facilitate the drilling, water should be circulated down the inside of the drill pipe and withdrawn with a suction pump. The pump also removes drill cuttings and used water. After the well has been drilled insert a 3 or 4 inch string of casing to the bottom with perforations opposite the water zone and surround the pipe with gravel.

The water well should be drilled until the water zone is penetrated and then drilled completely through. If the water zone is ten feet thick, drill through it plus five additional feet.

---

1 For further details on well drilling see: Bennison, E.W., GROUND WATER, St. Paul (Edward E. Johnson, Inc.) 1947. Anderson, Keith E., WATER WELL HANDBOOK, Rolla, Mo. (Missouri Water Well Drillers Association), 1963. Department of the Army, TM5-297 (also AFM85-23), WELLS, Washington (Superintendent of Documents, U. S. Government Printing Office), 1957.
2 The method for drilling wells described here was used in Latin America by VITA volunteer William A. Blackwell.

The water well will produce varying quantities depending on thickness of zone, lateral extent of zone, porosity and permeability of zone, pressure of zone, and migration characteristics of surface and underground water.

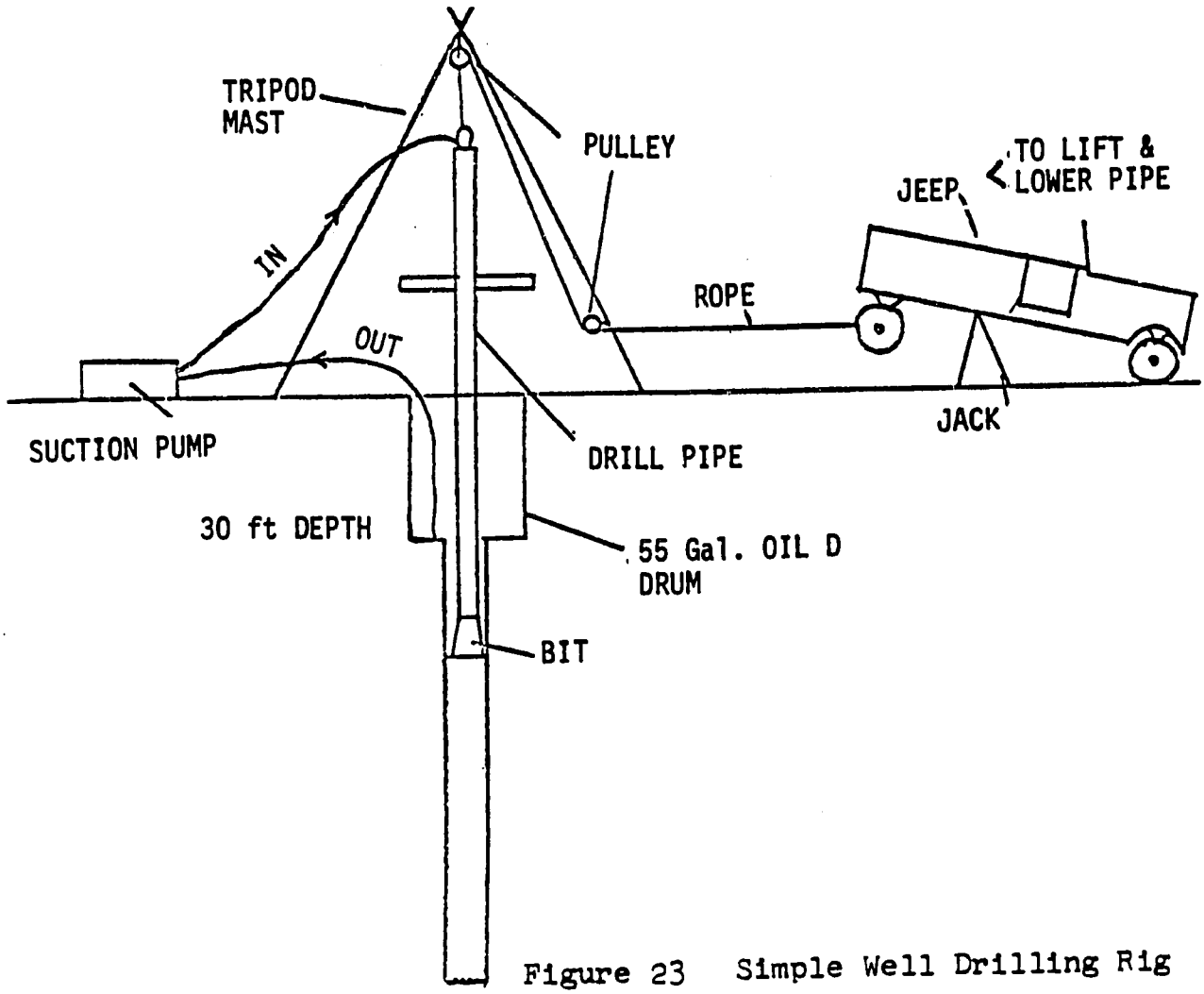

Figure 23 Simple Well Drilling Rig

If the well is being drilled in sandy soil, the casing should be placed as the drill bit is penetrating. This can be accomplished by inserting the drill bit down through the casing. The casing will sink as the depth of the hole increases.

The drill bit can be made by using standard weight steel pipe, 4 inches in diameter and 40-50 inches in length. Teeth are V-notched with a hacksaw into one end of the pipe. The other end is cut, bent, and welded to a section of pipe. This pipe forms the socket for the drill line extensions.

Although the drilling method of well construction has been used successfully, it is recommended that one of the other methods described in this section be selected whenever a choice is available.

I-D: WELL CONSTRUCTION--EQUIPMENT, TOOLS, TECHNIQUES, AND PROBLEMS

LESSON NO. 1

LESSON OBJECTIVE: Establish planning requirements necessary before actual construction begins.

TOPIC	INSTRUCTIONAL PROCEDURE	SUPPLEMENTAL MATERIALS / RELATED READING
Characteristics of Type of well to be constructed	1) Review the general procedure followed in constructing the well that is to be built. 2) List the materials and tools required for construction.	WHO Monograph #42: Water Supplies for Rural Area and Small Communities.
Steps to Follow in Constructing a Well	1) Review minimum distances wells must be located from sources of pollution. 2) List the items that must be considered prior to starting construction: site preparation; work crew organization; material and tool care. 3) Have trainees divided into work crews of appropriate size, depending on the type of well(s) to be constructed.	Section I-C: Suggested Minimum Distances Between Sources of Pollution and Water Wells
Work-Planning-Organization	1) Each crew is to select an appropriate location for the construction of their well. 2) Have each crew select a foreman, materials supervisor, and workmen. (These should be rotating assignments, giving each crew member an opportunity to work in each position.) 3) Supervise as each crew lists materials and tools needed for construction.	Maps sketched in Section I-A

I-D: WELL CONSTRUCTION--EQUIPMENT, TOOLS, TECHNIQUES, AND PROBLEMS

LESSON NO. 2

LESSON OBJECTIVE: Organize construction site in preparation for actual construction.

TOPIC	INSTRUCTIONAL PROCEDURE	SUPPLEMENTAL MATERIALS / RELATED READING
Well Logs	1) Review the data items that should be included in the well log record. 2) Each team shall prepare a form for maintaining a progress during construction and to serve as a permanent record for the well upon its completion. 3) Review and examine all forms before construction is started.	Section I-C
Site Selection	1) Have trainees use maps already drawn in Section I-A to locate the site for each well. 2) Once the actual site has been pinpointed, trainees recheck distances from all surrounding sources of contamination to insure that minimum distances have been satisfied.	Hand-sketched maps of the surrounding area
Site Preparation	1) If site is in wooded area, the immediate area around the well should be cleared of all brush and cover so that construction will not be disrupted once it has started. 2) Using lists of tools and materials prepared in advance, have each crew "draw" the equipment needed for construction of their well. 3) Build a platform or tripod for use in lowering and raising casing into the well. 4) Supervise as crews begin construction.	

I-D: WELL CONSTRUCTION--EQUIPMENT, TOOLS, TECHNIQUES, AND PROBLEMS

LESSON NO. 3

LESSON OBJECTIVE: Discuss problems usually associated with well construction and the appropriate corrective actions usually taken.

TOPIC	INSTRUCTIONAL PROCEDURE	SUPPLEMENTAL MATERIALS / RELATED READING
Problem solving approach	1) Emphasize the importance of stopping operations whenever any major difficulty is experienced. 2) Identify procedures to follow when difficulties are experienced: a. Stop operation b. Identify cause of malfunction c. Determine all possible solutions d. Select solution that will provide the simplest and least expensive answer to the problem e. Organize crew responsibilities to correct the situation	
Well Construction Problems	1) Have trainees list types of problems likely to occur during well construction. Problems listed should include: a. Well not progressing in a straight line; b. Tools dropped into well shaft; c. Sandy soil entering the well more rapidly than construction is progressing (dug wells); d. Sub-surface strata impeding progress; e. Large stones blocking progress (driven, bored wells). 2) Discuss possible ways of solving problems. 3) List problems and proposed solutions for future reference. (This list should continue to grow as construction progresses).	

I-D: WELL CONSTRUCTION--EQUIPMENT, TOOLS, TECHNIQUES, AND PROBLEMS

LESSON NO. 4

LESSON OBJECTIVE: Demonstrate the skills needed in order to repair inoperative construction tools and equipment.

TOPIC	INSTRUCTIONAL PROCEDURE	SUPPLEMENTAL MATERIALS / RELATED READING
Maintenance vs. Repair	1) Point out that materials and tools selected for use in developing countries should be simple in nature, low in maintenance requirement, and simple to repair. 2) Emphasize the importance of periodic maintenance as the simplest way to avoid costly time in repairing tools.	Instructions for repair or maintenance that came with any commercially built equipment or tools.
Simple Maintenance and Repair Skills	1) Demonstrate method of sharpening well bits, splicing cable; building tools for fishing lost pieces in the well shaft. 2) At the construction site supervise and assist trainees as the need arises to repair tools and equipment. 3) During the course of construction, each trainee should be given tasks which require his learning the function and use of tools from the basic construction trades: CARPENTRY PLUMBING MASONRY.	

I-D: WELL CONSTRUCTION--EQUIPMENT, TOOLS, TECHNIQUES, AND PROBLEMS

LESSON NO. 5*

LESSON OBJECTIVE: Summarize the performance of each team: indicate strengths, weaknesses and additional measures that should have been considered.

TOPIC	INSTRUCTIONAL PROCEDURE	SUPPLEMENTAL MATERIALS / RELATED READING
Criteria for Evaluation	1) Identify the steps to be used for evaluating each crew: a. Ability to build well within framework of original plan; b. Organization of work to perform all required tasks; c. Completeness of progress reports and well logs; d. Solution of unplanned problems; e. Overall quality of performance.	
Reports and Evaluation	1) Have foreman of each crew give a summary report, touching on all points above. 2) Question and comment on each report, indicating where and how performance could have been improved.	
	* Most likely additional sections of the manual will be covered before the wells are completed; this lesson should be held. One session devoted to performance evaluation should be held at the end of construction and not necessarily at the end of this section.	

SECTION I-E

DEVELOPING AND TESTING THE NEW WELL

OVERVIEW:

Up to this point in the training program field sessions have been directly related to the topics being discussed in "classroom" sessions. At this point in the program, group talks should begin to move ahead of the work being accomplished in the field. Each day, time should be spent discussing problems encountered in constructing the well, with the remainder of the group session spent introducing the material remaining in the manual.

Hence, when the well is ready for completion, development, and testing, the material will already have been introduced some time before. An effort should be made to have the completion of the well construction field phase coincide with the completion of Section II in group discussion. Section III will then concentrate on expanding the technical skills acquired thus far with the background material needed for implementing well construction programs.

The important factor to stress in this section is that proper development will assure a long-life well at full-capacity and that proper testing will give the information necessary for selecting the right size pump to be used with the well.

E. DEVELOPING AND TESTING THE NEW WELL

OBJECTIVE: Following construction of the well, develop and test the new well to assure full production capacity.

TASKS:

1. Determine the well development method to be used.
2. Secure the equipment essential for developing the well.
3. Perform the steps necessary to properly develop the well.
4. Grout and seal the casing to prevent pollution of the new well.
5. Calculate the hydraulic characteristics of the well, including static water level, dynamic water level, drawdown and yield.
6. Build a sanitary seal at the top of the well.
7. Disinfect the well to eliminate contamination caused during construction.

FUNCTIONAL SKILLS:

1. Identify the various methods used to develop a well, the equipment necessary for each method and conditions most suitable for each method, and the procedures to be followed with each method.
2. Perform the steps necessary for developing a well properly.
3. Identify the equipment needed to grout and seal a well casing.
4. Mix and pour cement.
5. Know when a well casing has been properly grouted and sealed.
6. Describe the hydrologic characteristics of wells (general principles).

7. Measure the drawdown and yield of a well.

8. Describe the requirements necessary for constructing a safe, sanitary seal at the top of a well.

9. Identify the solutions, methods, and reasons for disinfecting a new well.

TERMINAL PERFORMANCE TESTS:

1. In a field exercise, seal a well casing, using equipment that will most likely be available on assignment.

2. Explain the hydrologic characteristics of wells, and the steps taken to measure the drawdown and yield of a well.

3. In a field exercise, construct a sanitary well seal which meets all the necessary requirements.

4. In the field, disinfect a new well, preparing the mixture needed to perform this task.

WELL DEVELOPMENT

HYDRAULICS OF WELLS

Before being pumped, the level of water in a well is the same as the level of the water table in the water-bearing formation in which the well is completed. This is called the static level in the well and in the formation. The depth from the ground surface to the static water level is measured, and this distance is used to describe its position. Thus, if the water in the well is 25 feet below ground, the static water level is said to be 25 feet for this well. Elevation of the static water level above mean sea level can also be used to describe its position.

When a well is pumped, the water level drops. After several hours of pumping at a constant rate, it stabilizes itself in a lower position. This is called the pumping level or dynamic water level for this rate of pumping.

The distance that the water is lowered by pumping is called the drawdown. It is the difference between the static level and the pumping level. The drawdown in the well, resulting from pumping, lowers the water pressure in the well, but the surrounding water-bearing formation retains its original pressure. In response to this difference in pressure, water flows out of the pores of the formation into the well.

The water-bearing formation does not give up its water all at once to the pumped well. The flow of water into the well is held back by the frictional resistance offered by the formation to the flow of water through its pores. The resistance varies in each formation and is developed in direct proportion to the rate of movement or velocity of the water in the formation. It follows from this that the rate of flow resulting from a given pressure difference depends on the frictional resistance to flow developed in the formation. The term used to describe this characteristic of a porous material is "permeability".

To visualize what occurs when a well is pumped, consider the small voids, pores, and channels in the formation through which the water passes, as a complex system of pipes, all of which are connected and leading to the main well. If a full stream of water were run through a single pipe with a device for measuring the head or pressure of the water placed at both ends of the pipe, there would be less pressure at the discharge end than at the intake end. The "rubbing" of the water against the pipe walls and the rubbing of the molecules of the water against each other cause friction, and it requires some pressure to make up for, or overcome, that friction. In a complex system of pipes or in a system of

passageways like the openings in a sand formation, there are other causes of pressure loss such as bends and contractions, in addition to simple friction. It is this differential head, or difference in pressure measured by the amount of drawdown or drop in head, that moves the water through these passageways in the water-bearing formation and into the well.

The total pressure difference, represented by the drawdown in the well, distributes itself throughout the formation in every direction around the well. The water level in the formation slopes toward the well from every direction within the area of influence of the pumping well. The water surface within this area takes the form of a depression, shaped like an inverted bell, which is called the "cone of depression". At any point within the cone of depression, the distance that the water surface drops below the original static level is the drawdown at that point. This may be determined in an observation well at any desired location, just as the drawdown in the pumping well is measured. Figure 24 illustrates the drawdown at various distances from a pumping well. The shape and extent of the cone of depression vary with the rate of pumping and with the permeability of the aquifer.

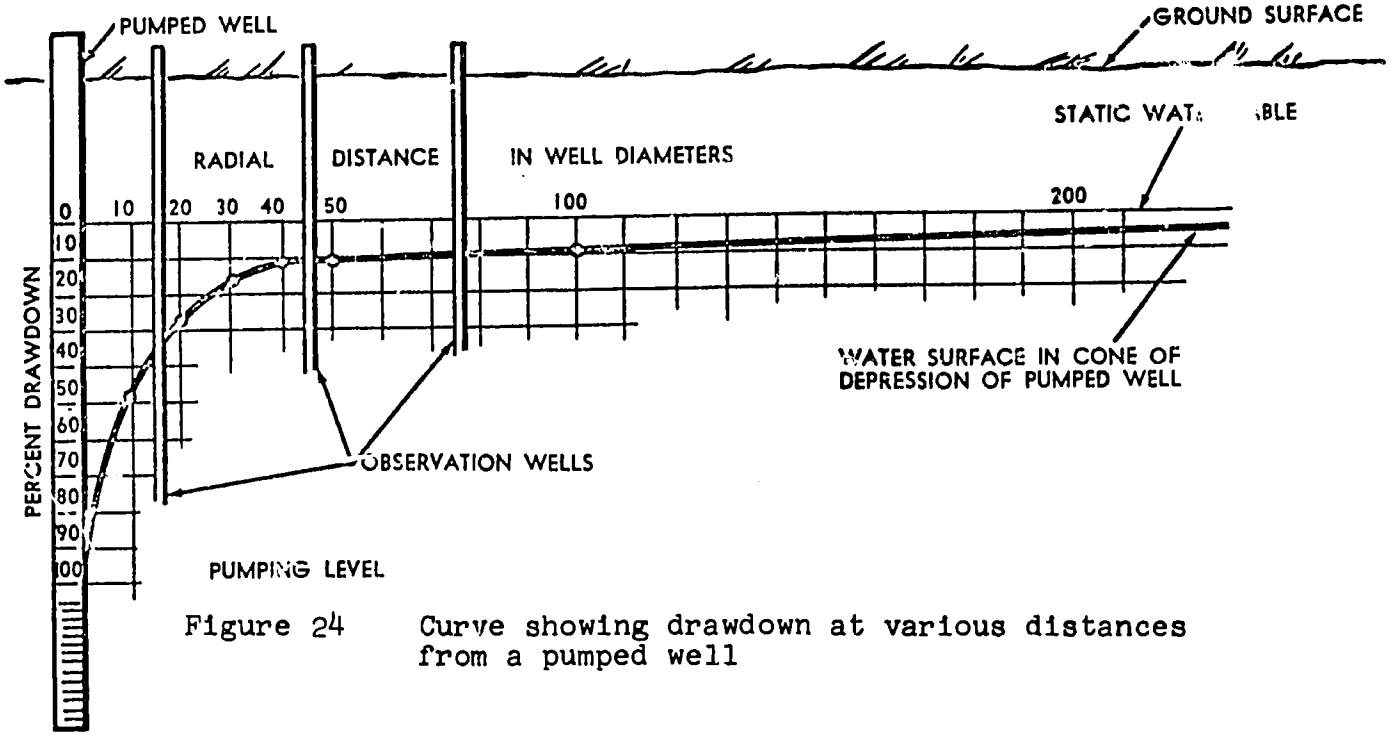

Figure 24 Curve showing drawdown at various distances from a pumped well

For a particular type of well to be constructed, the yield of the well for any given drawdown is directly proportional to the permeability of the formation. This property of the formation varies through wide ranges, the value for a coarse sand stratum being several hundred times that of a fine sand stratum of the same thickness. Yield increases with coarseness of the sand and decreases with the compactness of the material. It increases where the sand grains are more nearly uniform in size. It decreases when fine sand and silt fill the voids between larger particles. The permeability of a rock formation, like limestone, varies with the number and size of the fractures, crevices, and solution channels. Finally, the permeability varies directly with the thickness of the formation.

The importance of the uniformity of sand in its effect on hydraulic properties is often overlooked. For example, if some large stones are found in a sand stratum, it is usually assumed that these particles improve the permeability of the formation. However, if these stones are seen as simply floating in the formation, each one completely embedded in the sand, it is obvious that the stones actually obstruct the flow, because water must move around them through the sand. A formation would be more permeable if all the stones were replaced by an equal volume of the sand in which they are embedded.

In wells where the casing penetrates the full depth of the water-bearing stratum, the capacity of the well is directly proportional to the thickness of this stratum if the drawdown and other conditions remain the same. The deeper the well is driven into a water-bearing stratum, the greater the discharge for a given drawdown. Where the water-bearing formations are thick, there is a tendency to limit the depth of wells due to the cost. This cost, however, usually is balanced by the savings in operation resulting from the decreased drawdown.

If the water-bearing stratum is confined under a tight, impervious layer of other material, such as clay, the water will usually be under some pressure in the formation so that when a well is drilled into it the water rises in the well above the top of the formation. In such cases, the water in the formation is said to be under artesian pressure. A well completed in such a formation is performing under artesian conditions, in contrast to nonartesian conditions where the water in the formation is not confined by an overlying impervious stratum. The relationship between drawdown and yield is somewhat different for each of these conditions, as indicated by the curves shown in Figure 25. For example, under artesian conditions, 40 percent of the total available drawdown will develop 45 percent of the maximum yield of the well. Under nonartesian conditions, 40 percent of the total available drawdown will develop 64 percent of the maximum

yield of the well. It is evident that yield increases almost in direct proportion to drawdown under artesian conditions throughout the whole range of available drawdown. Under non artesian conditions, the yield increases about in direct proportion to drawdown up to the point where about 60 percent of the available drawdown has been utilized. Further drawdown beyond 60 percent will not give much additional yield.

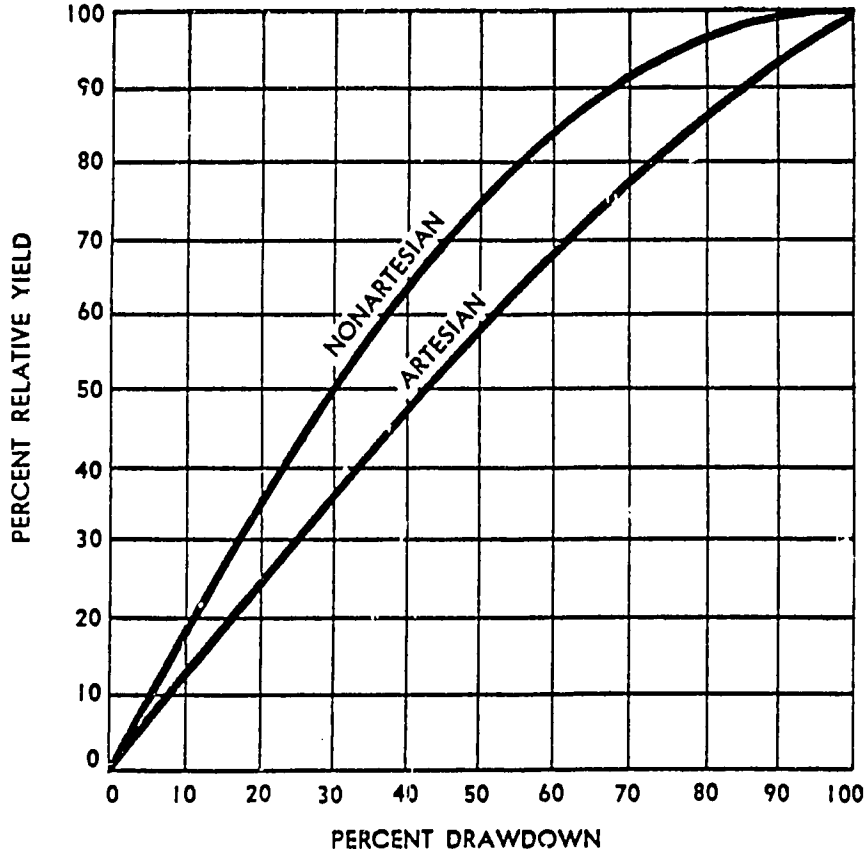

Figure 25 Ideal relation of drawdown to yield

DEVELOPMENT OF WELLS

Development work is most important in the completion of a screened well because the uniformity of the grading of the sand or gravel around the screen is improved by removing the finer particles. The type of screen openings, the spacing between openings, and the size of the openings all affect the extent to which the development work can be carried out. The openings should be of such a shape that they will not clog. The sizes of the screen openings are deliberately chosen large enough so that the desired proportion of the finer material in the water-bearing formation will pass through them. The development work can then exhaust the finer material from the formation. When these finer particles

are brought into the well by development, the coarser particles are held out by the screen envelope. The result is sometimes called "natural gravel packing" of the well, since the coarse and more permeable material left around the well screen is actually a part of the natural formation.

The uniformity of the sand or gravel is more important than the average size of the grains in its effect on the yield of the well. In addition to improving the yield, proper development of a sand or gravel formation also stabilizes the formation in the vicinity of the screen so that the well will always be sand-free after it is completed. The natural gravel pack is coarsest next to the screen where all the fine particles have been pulled through the screen openings. A little farther out, some of the medium-sized grains remain mixed with the largest grains. Still farther outside this zone, the whole envelope of material left around the screen grades gradually from the coarsest particles next to the screen to the unchanged natural formation at a distance outside the screen that is beyond the effective reach of the method of development employed.

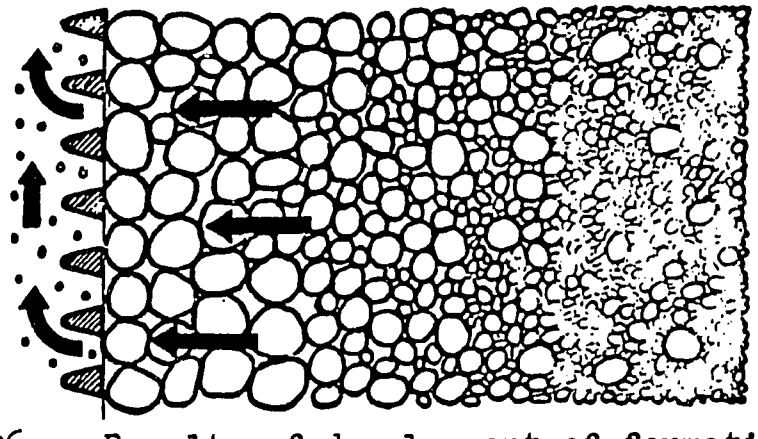

Figure 26 Results of development of formation

The methods of development and something about their relative effectiveness are discussed in the next few paragraphs. The fundamental purpose in each development operation is to induce alternate reversals of flow through the screen openings that will rearrange the formation particles, thus breaking down bridging of groups of particles (small particles bridge between large particles and across screen openings when the flow of water through the sand is in one direction only). In development, the direction of flow is alternately reversed by surging the well. The outflow portion of the surge cycle breaks down bridging, and the inflow portion then moves the fine material toward the screen and into the well.

Although a well site may have been properly selected, the strata correctly interpreted, and the presence of water accurately judged, a well may fail to yield water at first

because the sand around the well point is clogged with fine particles that need to be removed by development. This silt and fine sand may have also washed through the screen openings, partially filling the well point. This difficulty may be overcome with a pitcher-spout hand pump, usually supplied for drive-point wells. The common pitcher-spout pump has a plunger and a check valve so arranged that the check valve can be tripped when the pump handle is raised as high as possible. It is, therefore, possible to pump for a while and then trip the check valve to allow water to run back down the well pipe. By alternately applying a heavy suction on the well and tripping the valve to let the water run back, a surging action is produced through the screen openings. Even if there is only a small flow of water at first, the reversal of flow due to the surging tends to loosen the fine material plugging the screen openings and to bring the fine sand and silt into the well point. This fine material may be pumped from the well if continuous hard pumping is done for a few minutes. The well is ready for use once it has been pumped enough to clear up the flow. The pump should be checked to see that there is no sand on the valves or on the plunger.

If all the sediment cannot be cleared from the well point by pumping, one of the following methods may be used;

(1) Lower into the well a series of connected lengths of 3/4 inch pipe, with the lower end resting on the sediment in the well point. Clamp the pipe in position and attach a hand pump to the upper end. Run water into the well pipe (not the 3/4 inch pipe) and operate the hand pumps. By steadily pumping, the sediment will be lifted through the 3/4 inch pipe to the surface level until the well is cleared.

(2) Insert a string of 3/4 inch pipe into the well and fill the well with water. Repeatedly raise and lower the pipe sharply by hand. By holding the thumb over the top of the 3/4 inch pipe during the upward movement and removing thumb during downward movements, a jet of muddy water is expelled on each downward stroke. When the material has been loosened and put into suspension the muddy water can be pumped out.

(3) Water pumped into a string of 3/4 inch pipe resting on a sediment will remove the fine material by a jetting action. This procedure requires a large supply of water and a motor-driven or hand-force pump.

It may be impossible to develop a successful well if too fine a screen is used. The openings must be large enough to permit the finer particles of water-bearing soil to enter the well point while retaining the coarser particles. With properly sized screen openings, development expels the finer material adjacent to the well point and retains the coarser particles to form an envelope of highly porous and permeable material around the screen.

Where the water-bearing level is too deep to permit the use of a pump at ground surface, it may be possible to sink a shaft or pit to allow the installation of a pump within the suction lift above the water-bearing level.

This method consists of alternately lifting water to the surface by pumping and letting the water run back into the well through the pump-column pipe. About the only type of pump besides the air-lift that can be used practically for this purpose is a deep-well turbine pump without a foot valve. The pump is started, but as soon as water is lifted to the ground surface the pump is shut off. The water then falls back into the well through the column pipe. The pump is started and stopped as rapidly as the power unit and starting equipment will permit. The effect is to intermittently lower and raise the water level in the well which produces the inflow and outflow, respectively, through the screen openings. During the procedure, the well may be pumped to waste from time to time to remove the sand that has been brought in by the surging. After completing the surging, the pump must be removed and any material remaining in the screen must be bailed out.

A third method is to backwash by pouring water into the well as rapidly as possible, thus producing outflow through the screen openings. Inflow through the screen is then accomplished by bailing water out of the well as rapidly as possible. As can be seen, this is not a very rapid means of surging as the time required for a complete cycle will be several minutes under best conditions. If the static water level is high enough to permit pumping by suction lift, a small centrifugal pump can be used instead of the bailer and this will speed up the work. If there is room in the well casing, the discharge side of the pump can be connected to a string of small-diameter pipe that is let down in the well, so that the water added is pumped down inside the screen. The turbulence thus created inside the screen will assist in development of the formation.

GROUTING AND SEALING CASING

Cementing or grouting the casing involves filling the annular space between the outside of the casing and the inside of the drilled or bored hole with cement grout. When both an

inner and outer casing are used, the grouting may be required between the two casings. The grout is a fluid mixture of cement and water of a consistency that can be forced through the grout pipes and placed as required. Grouting and sealing the casing in water wells is done for four reasons--

(1) To prevent seepage of polluted surface water down along the outside of the casing.

(2) To seal out water of unsuitable chemical quality in strata above the desirable water-bearing formation.

(3) To make the casing tight in a hole that is larger than the pipe used.

(4) To make a protective sheath around the casing, increasing its life by protecting it against exterior corrosion.

Although quick-hardening cement is highly desirable and should be used to save time when it is available, Portland cement grout meets most requirements for grouting. Preferably about 5 gallons, and not more than 6 gallons of water per 94-pound sack of cement should be used. Where a considerable volume of grout is needed, 1 cubic foot of fine or medium sand can be added for each sack of cement. A small percentage of hydrated lime will improve the flow property of the grout. If cement is not available locally, the hole should be back-filled with compacted clay.

Grouting of the casing near the surface can be done by simply dumping the grout in the hole around the casing and puddling it with lengths of pipe. This method will provide a satisfactory seal around the casing. If possible, a pipe may be inserted in the hole between the casing and the earth side and grout forced down this pipe and into the space.

Whatever methods or materials are used, care should be taken to prevent surface water from entering the well and polluting the ground water source.

COMPLETING TOP OF WELL

The casing in any well should extend at least 1 foot above the general level of the surrounding surface. Once the space around the outside of the casing has been sealed securely as described above, a concrete platform (when cement is available) should be poured around the casing at the ground surface. For an open dug well, a watertight cover must be provided over the curbing. A concrete cover is preferable. Wood covers cannot be kept watertight. A well with pipe casing should be provided with a sanitary well seal at the top that fills the space between the pump

pipe and the well casing. This device consists of a bushing or packing gland that makes a watertight seal at the top of the casing.

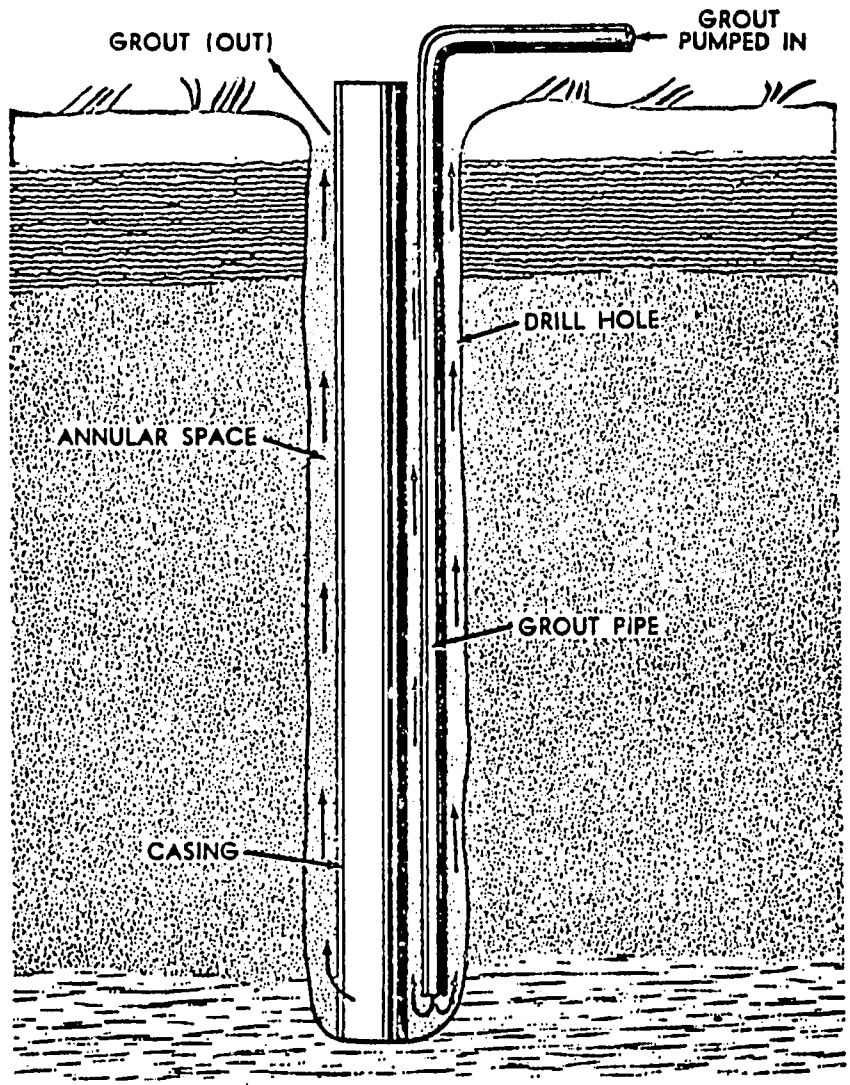

Figure 27 Grout pipe outside casing

WELL DISINFECTION

After a well is constructed and pumped clear, or after any improvements are made, it should be disinfected with a chlorine bleach. Bleaches containing 5.25 percent available chlorine are sold under such names as Clorox, Dazzle, Purex, White Sail, 101, etc. The procedure for disinfecting a well is as follows:

(1) Mix 2 quarts of bleach in 10 gallons of water. Pour the solution into the well while it is being pumped. Keep pumping until the chlorine odor appears at all taps. Re-circulate the water back into the well for at least an hour. Then close the tap and stop the pump.

(2) Mix 2 more quarts of bleach in 10 gallons of water and pour this chlorine solution into the well. Allow the well to stand idle for at least 8 hours and preferably 12 to 24 hours.

(3) Pump the well to waste until the odor of chlorine disappears. The chlorine may persist for 7 to 10 days depending on how much water is used.

After all the chlorine is pumped out, a water sample should be collected and tested by the health department, if this service is available, to determine whether all contamination has been eliminated. Make sure all chlorine has been pumped out of the well (no chlorine taste or odor in the water) before a sample is collected.

Remember that disinfection is no assurance that water entering the well or spring is free of pollution.

TESTING WELLS FOR YIELD AND DRAWDOWN

Pumping tests are made on wells to determine capacity and other hydraulic characteristics, and to secure information so that permanent pumping equipment can be intelligently selected. Preliminary tests of wells drilled as test holes are sometimes made to compare the yielding ability of different water-bearing formations or different locations in the same formation. This information is then used as a basis for selecting the best site for a supply well and the aquifer in which it should be completed.

MEASUREMENTS

The measurements that should be made in testing wells include the volume of water pumped per minute or per hour, the depth to the static water level before pumping is started, the depth to the pumping level at one or more constant rates of pumpage, the recovsry of the water level after pumping is stopped, and the length of time the well is pumped at each rate during the testing procedure. The testing described here is essentially the measurement of the hydraulic characteristics of a particular well. An additional term called "specific capacity," needs to be defined here. The specific capacity of a well is its yield per foot of drawdown, usually expressed as gallons per minute per foot of drawdown. The specific capacity is not constant for all values of drawdown, but is nearly so for wells tapping very thick aquifers and wells operating under artesian conditions. Normally, the specific capacity of a well decreases with increased drawdown.

PUMPING PROCEDURE

The pump and power unit used for testing a well should be capable of continuous operation at a constant rate of pumpage for several hours. If possible, the test pump should be large enough to test the well beyond the capacity at which it will eventually be pumped, but this may not be practicable. A rough idea of the yield of a small well can be gained by bailing water from the well rapidly, if no pump is available. Knowing the volume of water the bailer holds and counting the number of times per minute it is brought up full will give the gallons per minute removed from the well. No measurement of drawdown is possible, however, because the water level is continuously fluctuating from the static level to a varying pumping level.

For a fairly comprehensive test of a well, the pump should be operated first at a rate that will lower the water in the well about 1/3 of the maximum drawdown possible, or at about 1/3 of the capacity of the pump. Continue pumping at this

rate until the pumping level remains about constant. This will require from 1 to 4 hours in most cases. After making the necessary measurements, change the rate of pumpage to produce 2/3 of the maximum drawdown or to 2/3 of the capacity of the pump. Repeat the measurements when the pumping level becomes about stable. Increase the rate of pumpage to produce the maximum drawdown; or increase it to the capacity of the pump and make measurements a third time when the pumping level becomes about stable.

MEASURING RATE OF PUMPAGE

The simplest way to measure the water pumped is to catch it in a steel drum or other tank of known volume. The time required to fill the tank is determined as accurately as possible. The rate of pumpage in gallons per minute is then calculated. To get reasonable accuracy, the tank should be large enough to hold the water pumped during a period of at least 2 minutes. This limitation makes the method practical for relatively small wells, and therefore should be all the equipment necessary.

There are times when it is desirable to make a quick estimate of the flow from an open pipe. An approximate value of the discharge from a horizontal pipe, can be determined by measuring the distance from the end of the pipe to the point which is exactly 1 foot above the falling stream of water, as shown in Figure 28. This distance in inches multiplied by the area of the pipe in square inches is approximately equal to the discharge in gallons per minute. Table 2 gives values of discharge for various sizes of pipe and various values of the horizontal distance (D).

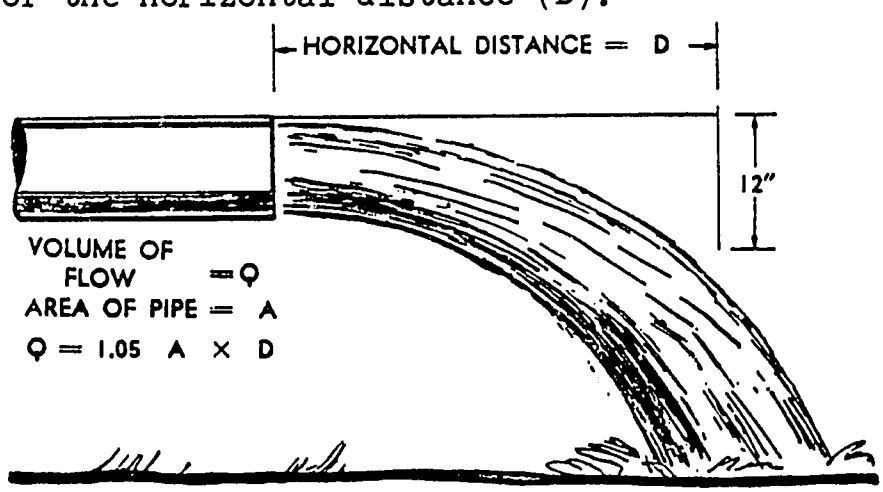

Figure 28 Method of estimating flow from horizontal pipe (full).

Table 2 Approximate flow from pipe running full, in gallons per minute

Diam. pipe	Horizontal distance (D)									
	12"	14"	16"	18"	20"	22"	24"	26"	28"	30"
2"	41	48	55	61	68	75	82	89	96	102
3"	90	105	120	135	150	165	180	195	210	225
4"	150	181	207	232	258	284	310	336	361	387
6"	352	410	470	528	587	645	705	762	821	880
8"	610	712	813	915	1,017	1,119	1,221	1,322	1,425	1,527
10"	960	1,120	1,280	1,440	1,600	1,760	1,930	2,080	2,240	2,400
12"	1,378	1,607	1,835	2,032	2,286	2,521	2,760	2,980	3,210	3,430

MEASURING DEPTH OF WATER

Chalked Tape Method

The most accurate way to measure depth to the static level and to the pumping level in a well is with a chalked tape. A steel tape with a weight to make it hang straight is chalked at the lower end with chalk and lowered into the well until a foot or two of the chalked lower end is submerged. The proper length to lower may have to be determined by experiment the first time. The wetted length of the tape, which shows up very clearly on the chalked portion of the tape, is subtracted from the total length lowered below the reference point; this gives the depth to water.

CALCULATIONS

The drawdown observed during a well test is the difference in feet between the pumping level and the static water level before pumping was started. The specific capacity of the well is the yield or discharge in gallons per minute divided by the drawdown in feet.

It is frequently desired to estimate the yield of a well at some value of drawdown beyond the limit of the actual pumping test. This can be done by using the pumping test data and the curves shown in Figure 25. In using the curves, the maximum possible drawdown is considered as being from the static level to the bottom of the well. In other words, 100 percent drawdown equals the depth of water in the well before pumping.

As an example, assume a well contains 100 feet of water and that the well is under a nonartesian condition. If the drawdown is 25 feet for a pumping rate of 80 gallons per minute, this is the yield corresponding to 25 percent drawdown.

Looking at the curve, it will be seen that 25 percent drawdown will develop about 45 percent of the maximum yield of the well, which in this example equals 80 gallons per minute. Following along the curve to 50 percent drawdown, it is seen that the yield would increase to 75 percent of maximum at drawdown of 50 feet. The yield for this drawdown would then be about $\frac{75 \text{ percent}}{45 \text{ percent}} \times 80 \text{ gpm} = 133.\text{gpm}$.

Any other combination of drawdown and yield can be estimated by similar calculations. Theoretically, the maximum yield of this well would be $\frac{100}{45} \times 80 \text{ gpm} = 178 \text{ gpm}$.

I-E: DEVELOPING AND TESTING THE NEW WELL

LESSON NO. 1

LESSON OBJECTIVE: Describe the characteristics of well hydraulics as they relate to the development of wells.

TOPIC	INSTRUCTIONAL PROCEDURE	SUPPLEMENTAL MATERIALS / RELATED READING
Effects of pumping water from a well on the water level of the well	1) Describe the variation that occurs in the water level of a well before and after pumping. 2) Define the terms static water level, dynamic water level, and drawdown; relating them to the description above.	
Permeability and Drawdown	1) Describe the effect that various types of rocks have on the drawdown of a well. 2) Illustrate how this influence is distributed in every direction around the well, thus creating the cone of depression. 3) Explain the significance of the cone of depression and its impact if wells are located too closely together.	Drawing illustrating the cone of depression
Yield and Permeability	1) Explain the direct relationship that exists between the permeability of a rock formation and the water yielding capacity of that formation. 2) Describe why the uniformity of a rock formation increases its permeability. 3) Define well development as the process of creating a uniform rock formation at the base of the well intake, thus increasing its yield.	

I-E: DEVELOPING AND TESTING THE NEW WELL

LESSON NO. 2

LESSON OBJECTIVE: Describe and illustrate the procedure for properly developing the various types of wells.

TOPIC	INSTRUCTIONAL PROCEDURE	SUPPLEMENTAL MATERIALS / RELATED READING
Need for Well Development	1) Demonstrate how sand can clog a well screen. 2) Define two purposes of well development: a. Increase the yield of the formation, b. Stabilize the formation so that well will always be sand-free.	
Methods of Well Development	1) Describe fundamental method of well development: To induce alternate reversals of water flow through the well screen so that formation particles will be rearranged. 2) Explain what happens to particles on both the outflow and inflow phase of surging. 3) Demonstrate various techniques of inducing this water surging effect in wells a. Using the common reciprocating hand pump; b. Raising and lowering a pipe placed inside the well casing, causing surging effect by hand. c. Jetting. 4) Have trainees practice the various methods of well development on the wells that have been constructed.	3/4" pipe lengths and fittings. Text of Section I-E, this manual. Additional methods, using more complicated materials are described in WHO Mimeograph #42.

I-E: DEVELOPING AND TESTING THE NEW WELL

LESSON NO. 3

LESSON OBJECTIVE: Demonstrate the proper methods of grouting and sealing the casing and completing the top of the well.

TOPIC	INSTRUCTIONAL PROCEDURE	SUPPLEMENTAL MATERIALS / RELATED READING
Reasons for Sealing the Casing.	1) Identify 4 major reasons for sealing the casing: a. Prevent entrance of polluted surface water into the well; b. Seal out unsuitable ground water above the water-bearing formation; c. To secure the casing tightly in the hole; d. Protect the casing from exterior corrosion. 2) Explain that a proper sealed well makes the difference between safe and polluted water.	
Grouting Mixture	1) Demonstrate the correct way to mix grout. 2) Point out the characteristics that indicate the right combination of cement and water. 3) Have trainees mix batches for each well and seal the casing.	Portland cement.
Well Top Completion	1) Demonstrate the proper techniques for pouring a concrete platform around the casing at ground surface. 2) Have each crew build the forms and pour a platform around each well.	Lumber for concrete forms; Portland cement, gravel, and sand.

I-E: DEVELOPING AND TESTING THE NEW WELL

LESSON NO. 4

LESSON OBJECTIVE: Disinfect each well and clean the well so that the water is safe for drinking purposes.

TOPIC	INSTRUCTIONAL PROCEDURE	SUPPLEMENTAL MATERIALS / RELATED READING
Method of Disinfection	1) Describe three steps to follow in disinfecting a well	
	2) Demonstrate method of making mixture of bleach and water	Bottles of Clorox; mixin containers.
	3) Observe as trainees mix batches and pour it into the well.	
	4) Pump each well clean the next day.	
	5) Have each trainee sample water from the well constructed (to insure proper procedures).	

I-E: DEVELOPING AND TESTING THE NEW WELL

LESSON NO. 5

LESSON OBJECTIVE: Explain measurements to be taken during test of well, the significance of these measurements, and procedures to follow in testing the yield and drawdown of a well.

TOPIC	INSTRUCTIONAL PROCEDURE	SUPPLEMENTAL MATERIALS / RELATED READING
Purposes for Testing Wells	1) Explain the importance of obtaining information so that pumping equipment may be intelligently selected.	
	2) List the measurements to be taken during the test.	Text of Section I-E, this manual.
Pumping Procedure	1) Describe while demonstrating, the correct pumping and measuring procedures to follow when testing.	
	2) Describe methods for measuring pumpage: a. Catching water in a tank of a known volume, b. Estimating discharge from a horizontal pipe.	Table in Section I-E
	3) Have trainees measure pumpage both ways, checking the measurement from one method against the findings of the other.	
	4) Once each crew has collected data, explain how drawdown, yield, and specific capacity are calculated.	
	5) Have each trainee calculate the three measurements for his well.	

SECTION II-A

TYPES OF PUMPS

OVERVIEW:

This section does not attempt to describe all the types of pumps that are presently used in small water systems today. Rather, the emphasis is on pumps that should be considered for use in developing countries.

The section briefly covers the major types of pumps used in small water systems, and discusses their characteristics: usual well pumping depth; capacity; efficiency range; simplicity of operation; ease of maintenance; method of power; and relative cost. The advantages and disadvantages of each are then summarized. This general discussion is then followed by a more detailed description of simple pumps that would be appropriate for use in village systems.

Memorizing the types of pumps or their characteristics is not important, as such studies are generally available for reference. It is important that the PCT recognize that there are various types of pumps suitable for varying situations and that it is critical that proper pump be selected for each well. The pump represents a considerable investment to those in developing countries and the trainee should be impressed with the significance of this investment.

SECTION II: PUMPS

A. TYPES OF PUMPS

OBJECTIVE: Categorize the types of pumps available for use in small water supply systems, and define the relative merits of each type.

TASKS:

(1) Identify the two major categories of pumps; displacement and velocity.

(2) Analyze the most commonly used pumps to ascertain the method by which they move water.

(3) Identify the factors used to evaluate the performance of any pump.

(4) Experiment with or test the various types of pumps to determine relative merits of each type of pump.

(5) Summarize the "advantages" and "disadvantages" of each type of pump.

FUNCTIONAL SKILLS:

(1) Illustrate (by written or graphic example) the two ways in which water is forced to the surface from a well.

(2) Explain the method of operation of the most common types of pumps.

(3) Identify, by nomenclature, the most common parts of commonly used pumps.

(4) List characteristics of pumps essential for a valid analysis of their relative merits. These characteristics should include: capacity; pumping depth limit; efficiency range; simplicity of operation; maintenance requirements; cost; power source requirements.

(5) Measure differences in pumps, relative to the characteristics above.

TERMINAL PERFORMANCE TESTS:

(1) Given graphic illustrations of various pumps in several steps of operation, describe how the water is being moved to the surface.

(2) Given several types of pumps, correctly identify the category in which each belongs.

(3) Given a number of well descriptions, select the type of well needed to satisfy pre-selected conditions.

PUMPS

TYPES OF WELL PUMPS

Two types of pumps are commonly used in individual water distribution systems. They are the positive displacement and the velocity. These pumps can be used in a water system utilizing either a ground or surface source. It is desirable in areas where electricity or other power (gasoline, diesel oil, or windmill) is available to use a power-operated pump. When a power supply is not available, a hand pump or some other manual method of supplying water must be used.

Special types of pumps with limited application for individual water supply systems include air lift pumps and hydraulic rams.

POSITIVE DISPLACEMENT PUMPS

The positive displacement pump forces or displaces the water through a pumping mechanism. These pumps are of several types.

One type of positive displacement pump is the reciprocating pump. This pump consists of a mechanical device which moves a plunger back and forth in a closely fitted cylinder. The plunger is driven by the power source, and the power motion is converted from a rotating action to a reciprocating motion by the combined work of a speed reducer, crank, and a connecting rod. The cylinder, composed of a cylinder wall, plunger, and check valve, should be located near or below the static water level to eliminate the need for priming. The pumping action begins when the water enters the cylinder through a check valve. When the piston moves, the check valve closes, and in so doing forces the water through a check valve in the plunger. With each subsequent stroke, the water is forced toward the surface through the discharge pipe.

Another type of positive displacement pump is the spiral rotor. The rotor consists of a shaft with a spiral surface which rotates in a rubber sleeve. As the shaft turns, it pockets or traps the water between the shaft and the sleeve and forces it to the upper end of the sleeve.

Other types of positive displacement pumps include the regenerative turbine type. It incorporates a rotating wheel or impeller which has a series of blades or fins (sometimes called buckets) on its outer edge and a stationary enclosure called a raceway or casting. Pressure several times that of pumps relying solely on centrifugal force can be developed.

VELOCITY PUMPS

Centrifugal pumps are pumps containing a rotating impeller mounted on a shaft turned by the power source. The rotating impeller increases the velocity of the water and discharges it into a surrounding casing shaped to slow down the flow of the water and convert the velocity to pressure. This decrease of the flow further increases the pressure.

Each impeller and matching casing is called a stage. The number of stages necessary for a particular installation will be determined by the amount of water required, the pressure needed for the operation of the water system, and the height the water must be raised from the surface of the water source.

When the pressure or amount of water required is more than can be practicably or economically furnished by a single stage, additional stages are used. A pump with more than one stage is called a multi-stage pump. In a multi-stage pump water passes through each stage in succession, with an increase in pressure at each stage.

Multi-stage pumps commonly used in individual water systems are of the turbine and submersible types.

Turbine Pumps

The vertical drive turbine pump consists of one or more stages with the pumping unit located below the drawdown level of the water source. A vertical shaft connects the pumping assembly to a drive mechanism located above the pumping assembly. The discharge casing, pumphousing, and inlet screen are suspended by a thrust bearing located in the pump head. The intermediate pump bearings may be lubricated by either oil or water. From a sanitary point of view, lubrication of pump bearings by water is preferable, since lubricating oil may leak and contaminate the water.

Submersible Pumps

When a centrifugal pump is driven by a closely coupled electric motor constructed for submerged operation as a single unit, it is called a submersible pump. The electrical wiring to the submersible motor must be waterproof. The electrical control should be properly grounded to minimize the possibility of shorting and thus damaging the entire unit. The pump and motor assembly are supported by the discharge pipe; therefore, the pipe should be of such size that there is no possibility of breakage.

TABLE: ADVANTAGES AND DISADVANTAGES OF VARIOUS TYPES OF PUMPS

	POSITIVE DISPLACEMENT			VELOCITY		
Types of pumps	hand pumps, plunger type	motor, wind driven, plunger type	chain or continuous bucket	centrifugal	deep-well turbine	jet
Usual well pumping depth (ft)	22-25Ft shallow well; up to 600 deep well	22-25 ft shallow well; up to 600 deep well	Depends on valve being lifted and type of power	10-20 ft.	50-300 ft.	15-20 ft. below ejector
Capacity Gallons/ Minute	3-15	10-25	4-20	Very wide range: 2 to unlimited	Very wide range: 25-5,000	5-125
Efficiency range (%)	Low; can be improved with double-acting cylinders; 25%-60%	Low; can be improved with double-acting cylinders; 25%-60%	Low	Good: 50%-85%	Good: 65%-80%	Low: 40%-60%
Operation	Very simple	Simple	Very Simple	Simple	More difficult; needs attention	Simple; air locks can cause trouble
Maintenance	Simple, but valves and plunger require attention; more difficult when pump cylinder is in the well	Same as hand pump; maintenance of motors sometimes difficult in rural areas	Simple	Simple, but attention is necessary	More difficult and constant; skilled attention is necessary	Simple, but attention is necessary
Cost	Low, but higher when cylinder is in the well	Low, but higher when cylinder is in the well	Reasonable	Reasonable	Higher, especially in deep wells	Reasonable

TABLE: ADVANTAGES AND DISADVANTAGES OF VARIOUS TYPES OF PUMPS (CONT.)

	POSITIVE DISPLACEMENT			VELOCITY		
Types of pumps	hand pumps, plunger type	motor, wind driven, plunger type	chain or continuous bucket	centrifugal	deep-well turbine	jet
Power	Hand or animal	Wind, motor	Hand, animal, wind, motor	Motor	Motor	Motor
Advantages	Low speed; easily understood by unskilled people; low cost	Low cost; simple; low speed	Simple; easy to operate and maintain	Efficient; wide range of capacity and head	Good for small-diameter boreholes; ease of operation	Moving parts on surface; ease of operation
Disadvantages	Low efficiency; limited use; maintenance more difficult when cylinder is in the well	Low efficiency; limited use; maintenance more difficult when cylinder is in the well	Low efficiency; limited use	Moving parts and packing require attention	Moving parts in well; rather expensive; requires good maintenance and operation	Limited application; low efficiency; moving parts require attention

The turbine or submersible pump forces water directly into the distribution system; therefore, the pump assembly must be located below the maximum drawdown level. This type of pump can deliver water across a wide range of pressures with the only limiting factor being the size of the unit and the horsepower applied. When sand is present or anticipated in the water source, special precautions should be taken before this type of pump is used since the abrasion action of the sand during pumping will shorten the life of the pump.

Jet (Ejector) Pumps

Jet pumps are actually combined centrifugal and ejector pumps. A portion of the discharged water from the centrifugal pump is diverted through a nozzle and venturi tube. A pressure zone lower than that of the surrounding area exists in the venturi tube; therefore; water from the source (well) flows into this area of reduced pressure. The velocity of the water from the nozzle pushes it through the pipe toward the surface where the centrifugal pump can lift it by suction. The centrifugal pump then forces it into the distribution system.

SIMPLE PUMPS

The choice of the right pump for any particular situation is of the utmost importance, for pumping problems are most often responsible for the breakdown or poor operation of small water-supply systems. It is important to remember that each pump has been developed by its manufacturer for a specific purpose, and has a definite range of application. It is your responsibility (if possible) to choose the pump that will do the best job at the least cost.

The selection of the pump for a water well depends on the size of the well, the quantity of water to be pumped, the drawdown and pumping level when pumping at the desired rate, and the type of power unit that is available. There are two general types of pump installation. One type is where the pump is set above ground, either on top of the well casing or near the top of the well. The other type is where the pump is installed inside the well casing at the required depth below the ground surface for proper operating conditions.

When a pump is installed above ground at the top of a well, the lowest pumping level at which the pump will operate is at a distance below the center of the pump equal to the maximum suction lift of the pump. Because of this limitation, the well pumps that are normally installed above ground are referred to as suction-lift pumps. This designation is used to distinguish such pumps from others called deep-well pumps, which are those that can be lowered inside the well casing to the desired depth.

SHALLOW WELL OPERATION

Suction lift or displacement pumps are those in which the piston and cylinder or other type of pumping mechanism has a practical suction lift capacity of 22 feet or less. Water is lifted by a partial vacuum being created within a cylinder or housing and the atmospheric pressure of air within the soil lifts it that distance. For any additional elevation the water must be raised by a positive pressure, such as a pump or air pressure.

These pumps are used in pumping water from shallow wells, springs, lakes, and streams. Theoretically, the suction lift capacity at sea level is 34 feet, but in actual practise is found to be about 22 feet. This value is further reduced 1 foot for each 1,000 feet of elevation above sea level.

The shallow well pump can be located directly over the water source or offset any distance from it as long as the suction lift of elevation,(22ft. max.) concerned is not exceeded. A pump for this type of operation normally has the pumping and driving mechanism built into one unit. It is low in initial cost, requires a minimum of space for installation and requires the least motor size for the gallons per hour rate desired. Below are a number of typical shallow well, suction, water lifting devices.

By far the largest category of pumps under this heading is the reciprocating plunger pump in which water is moved by the direct push of the plunger,piston, or bucket which reciprocates in a closed horizontal or vertical cylinder. By an arrangement of valves this reciprocating motion of the plunger produces a more or less steady stream of water flowing in one direction. In the simplest type, the plunger on the forward stroke pushes the water from the cylinder up a discharge pipe, while at the same time the space behind the plunger is filling from the suction pipe. The reverse stroke transfers the water from the suction to the forward side of the plunger (see Figure 29).

The reciprocating plunger pump is probably the most widely used throughout the world since it ranges from small, hand-operated plungers of an inch or two in diameter to huge, steam-driven pistons whose diameters may equal 3 feet or more. Very large pumps of this class are rarely installed today, since the centrifugal type has many advantages in the larger ranges; but for rural water supplies in sizes up to 6 in. in diameter, the reciprocating pump is extensively used in power-driven installations, and almost exclusively so in wind-, animal-, or hand-operated units.

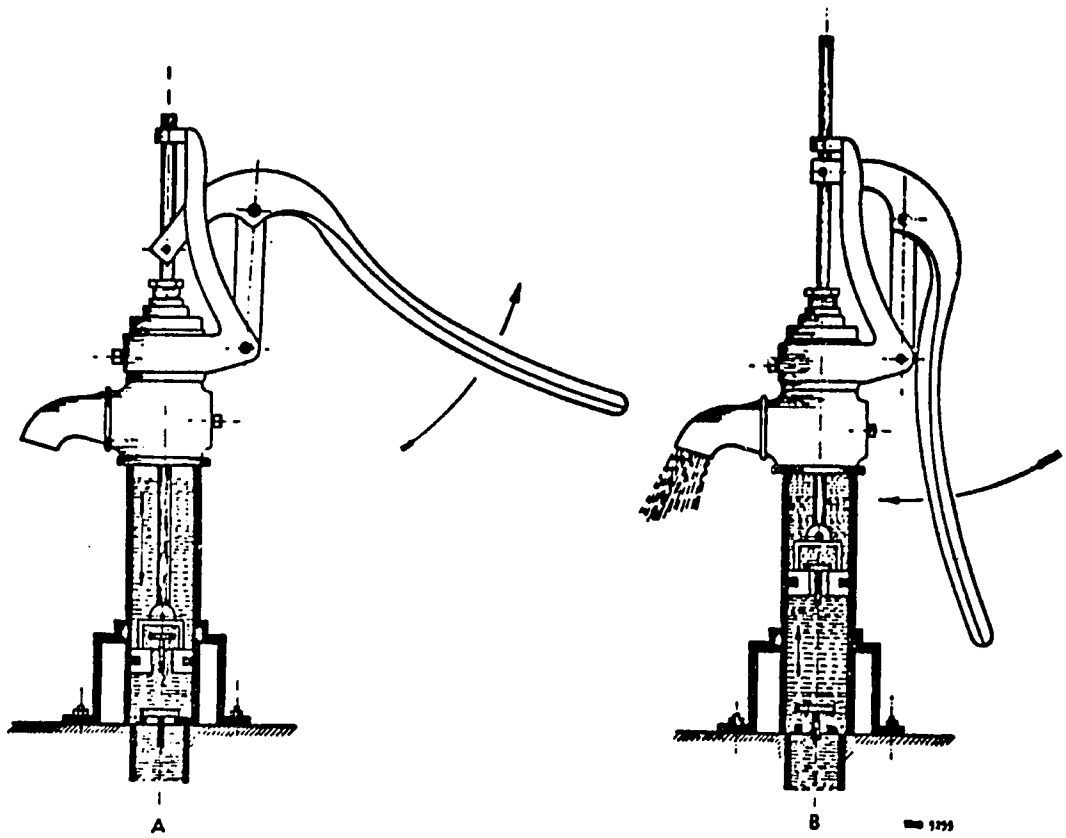

A — Down-stroke: Cylinder above plunger fills while valve at base of cylinder closes, and valve in plunger opens.
B — Upstroke: Cylinder full of water above plunger is expelled while, at the same time, valve at base of pump opens, filling cylinder below plunger. As plunger rises, a vacuum is formed below, pulling water into the cylinder.
When the cylinder is above ground, a foot valve is necessary to avoid pumping.

Figure 29 Hand Powered Positive Displacement Pump

Some of the main advantages of this type of pump in power-operated schemes are as follows:

(1) Flexibility: The delivery from a plunger pump is the volume of water displaced in the cylinder times the number of strokes of the plunger in a given time. Within wide limits the speed of the plunger can be varied, and the delivery varied in exact proportion. Only when too rapid a motion of the piston causes "slip", or movement of water backwards between the plunger and cylinder walls, is the limit of capacity reached. In addition, in most types performance can be adjusted by varying the length of stroke. Consequently, a pump of this type has a wide range of duty with little decrease in efficiency.

(2) Speed of operation: This type of pump normally needs a slower prime mover than a centrifugal type; consequently, wear is reduced, the life of

both the pump and the engine (if one is used) is prolonged, and less accuracy is required in adjustment.

(3) Ease of maintenance: With slow-moving bucket pumps little maintenance is required other than replacement of the leather bucket or plunger washers, and these are relatively easy to fix. The wear on these leathers is dependent on the purity of the water pumped. If it is free from silt or abrasive matter they may last for years without replacement. Properly used, these pumps rarely require any expensive replacements; and any work done on them can be carried out by relatively unskilled persons.

(4) Durability: There are few, if any, delicate parts in this type of pump; and it will stand mishandling better than centrifugal pumps, where dimensions may be critical. Should the water fail, for instance, and the plunger continue to operate without actually pumping, little damage will be done; a similar situation in a high-speed turbine pump would quickly ruin the whole mechanism.

(5) Initial cost: Because of their simplicity, the cost of reciprocating pumps is usually lower than that of other pumps with a similar capacity.

The hand-operated pump can be used in wells of any depth. In those which have a drawdown level of less than 16 ft., the cylinder is usually placed above ground. When the static water level is more than 16 ft. the cylinder is attached to a drop-pipe and placed in the well.

COMMON PITCHER PUMP

As the piston is raised the fixed check valve is open and water rises into the pump cylinder while at the same time water above the piston is raised and runs out the spout. On the down stroke the fixed check valve is closed but the check valve in the piston is open. There is no delivery on the down stroke. The cylinder, which might allow contamination to enter, and the fact that the piston leather may become dry and require priming are the main disadvantages of this pump. The water used for priming may be contaminated. This type of pump must not be placed more than 20 feet, measuring the distance from the check valve, above the lowest level of the water in the well. Since this

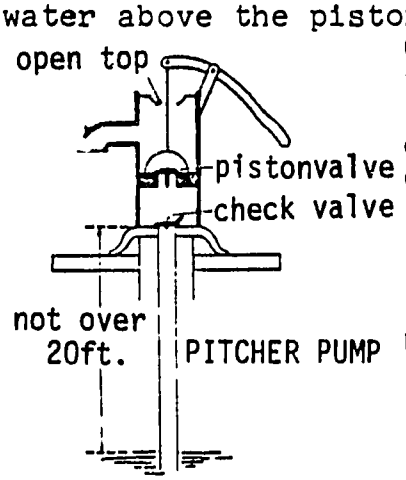

Figure 30 Shallow well, common pitcher pump

pump holds water in the cylinder and suction pipe, freezing with interruption of service and possible bursting may occur in severe weather.

SIMPLE FORCE PUMP

A variation of the pitcher pump, known as the simple force pump, allows water to be delivered through the faucet or, by closing the faucet valve, it may be forced out the discharge pipe and up into the storage tank. This pump requires a stuffing box and seal where the rod leaves the upper end of the cylinder. It should not be placed more than 20 feet above the lowest water level. This pump also is susceptible to freezing.

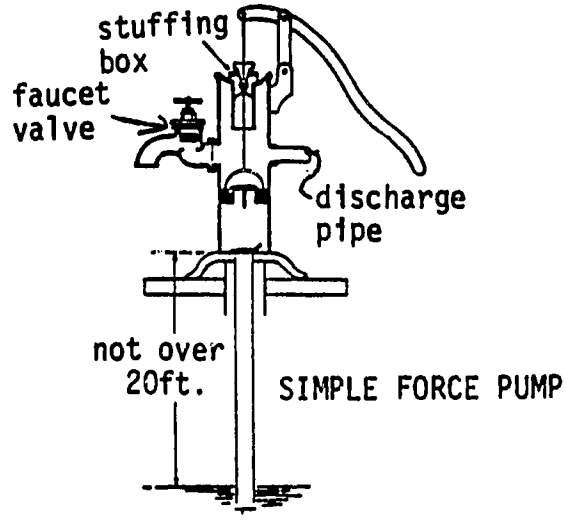

Figure 31 Shallow well; Simple Force Pump

Pumps driven by gasoline engines or electric power may be of the single-acting types already described or may be more elaborate. Double-acting pumps have two pistons moving in a cylinder in the well so that water is discharged in a continuous stream from the well. Some pumps, such as the examples above, have the lifting mechanism in a vertical; others in a horizontal position. The pump in Figure 33 is a double acting pump, meaning that water is lifted from the well on both directions of the stroke.

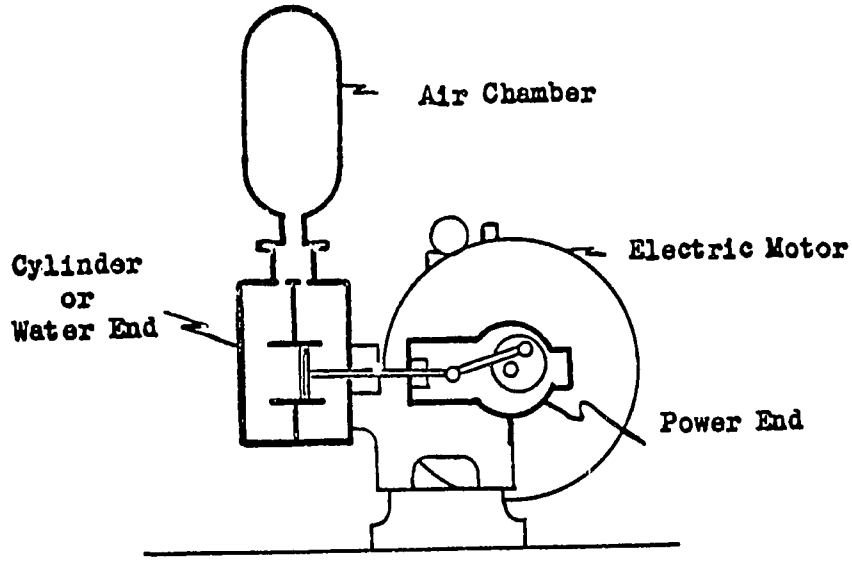

Figure 32 Shallow well or suction pump

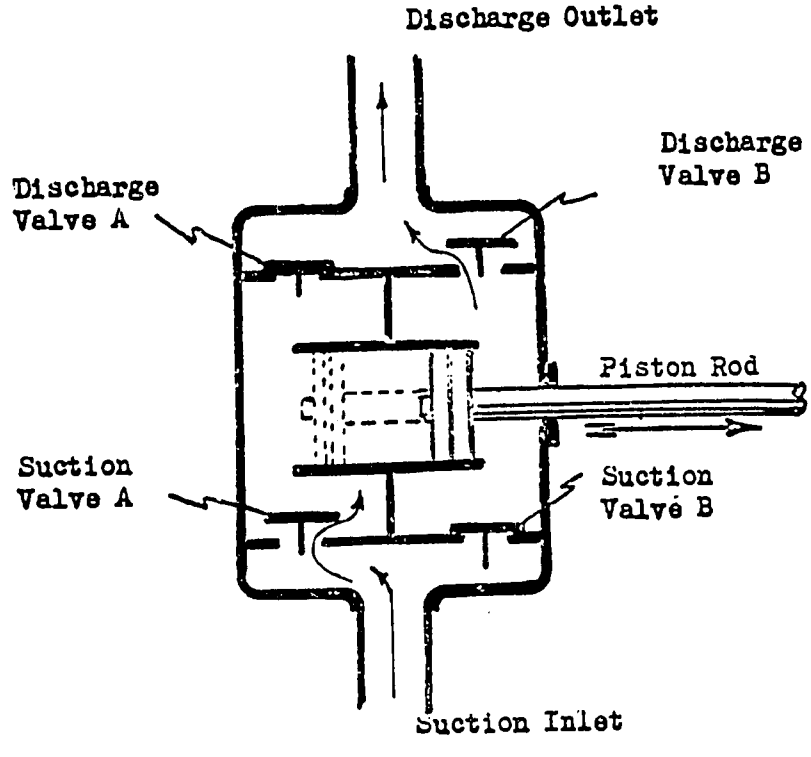

Figure 33 Water end or pumping mechanism of a shallow well double acting pump

DEEP WELL OPERATION

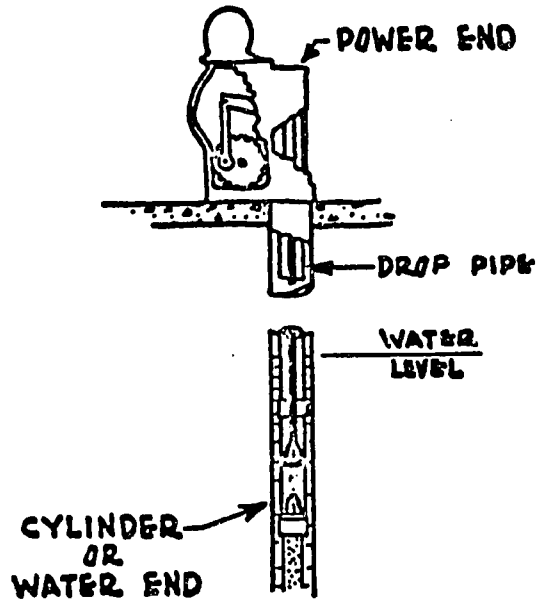

The deep well operating pump is one in which the driving mechanism (or power head) is separate from the pumping mechanism (or cylinder). The deep well operating pump must be located directly over the top of the water source, with the cylinder or pumping mechanism either submerged or within the suction lift (22 feet) of the water as indicated in Figure 34. Because the water table level changes at different seasons of the year, it is best to have the cylinder in or very close to the water.

Figure 34 Deep Well Pump

Figure 35 shows a typical deep well cylinder. This mechanism must be located in the drop pipe below the pumping head at the proper location such that water can be forced to the ground surface through the drop pipe.

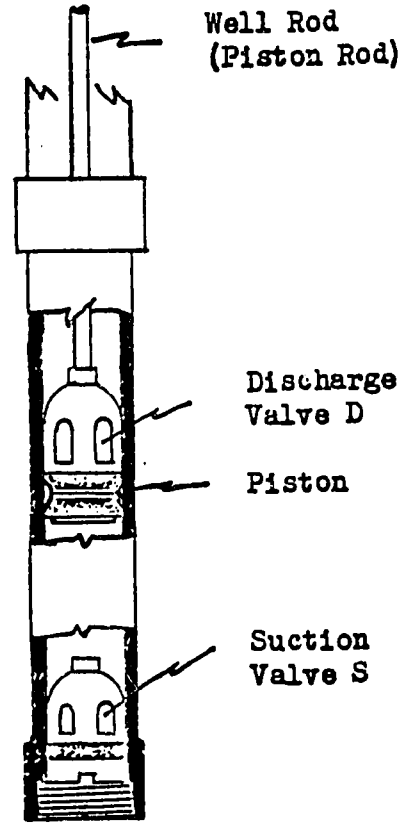

Figure 35 Single Acting Deep Well Cylinder

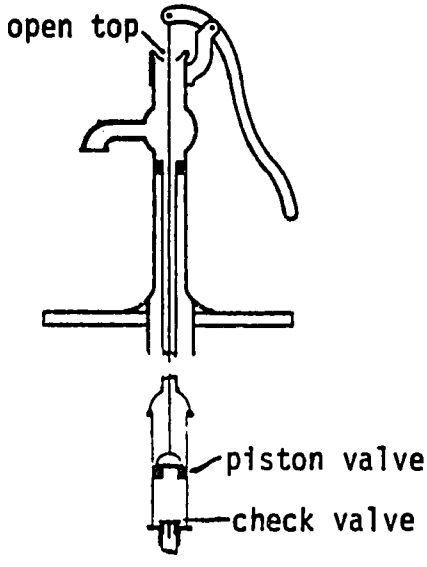

DEEP WELL LIFT PUMP

Figure 36 Deep well lift pump

DEEP WELL LIFT PUMP

The deep-well lift pump has the cylinder down in the well and submerged in the water. The intake is through the lower fixed check valve with another check valve in the piston; the method of operation of the piston and valves is the same as in the pitcher pump, or simple force pump. This pump can be protected from freezing by drilling a small hole, approximately one eighth of an inch in diameter, in the discharge pipe above the cylinder. This will permit the water in the pipe and pump barrel to leak slowly out into the well after the pump is stopped although it will, of course, also reduce the output through leakage while the pump is in operation.

DEEP WELL FORCE PUMP

This pump varies from the deep-well lift pump in that it has a stuffing box and air seal where the rod leaves the cylinder, and also has an enlarged section in the barrel above the faucet to form an air chamber. There is a faucet with a valve and also a connection for a pipe to a storage tank which may be elevated above the pump. With the air chamber full of air and the faucet valve closed, water is discharged up the pipe to the tank on the up stroke of the piston and the air in the chamber is also compressed. On the down stroke the air compression is relieved somewhat to permit the expanding air to force more water up the pipe to the tank. Even without actual delivery of water the air chamber serves to prevent knocking and pounding during pump operation.

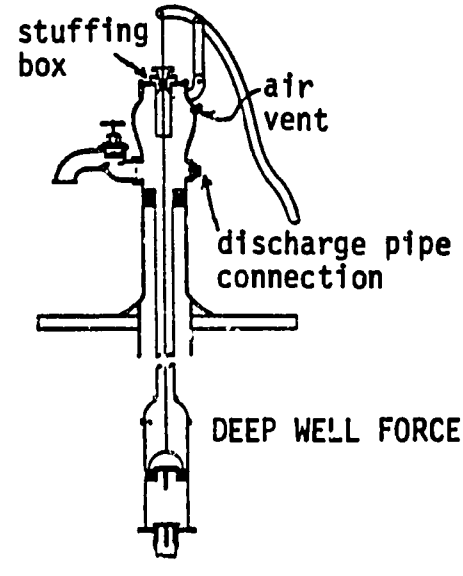

Figure 37 Deep well force pump

If the air priming is lost, it can be renewed by shutting a valve in the pipe between the pump and the tank and opening the air vent and faucet valve. An air chamber is sometimes placed on the discharge pipe of a pump. Its purpose and action, however, are the same.

CONTINUOUS-BELT BUCKET PUMP

Water is elevated in small buckets attached to a belt which continuously carries it to the surface. This is a fairly foolproof system, with little maintenance required. The original cost is considerable, but the pump could be made locally from local materials. Note the location of openings (A) of buckets.

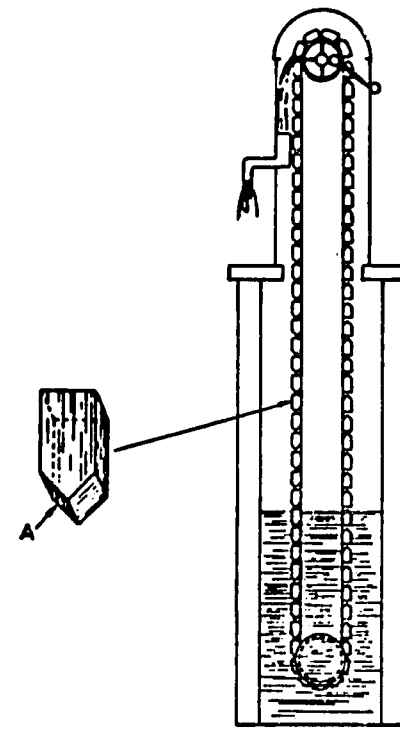

Figure 38 Continuous-belt Bucket Pump

SIMPLE PISTON PUMP

This basic design is common to most hand pumps. A valve is moved up and down in the pipe to lift water and a valve at the bottom keeps it from running out again. The valves can be made out of blocks of wood and pieces of rubber. Holes in the blocks permit water to pass through. The moving valve should not fit too tightly and the rubber part of the valve should form the seal (Fig. 39). If bamboo is used, plan to move the valve only within one segment. The lift restruction mentioned earlier applies only to the distance between the moving valve and the water level. How far you can lift water above the valve depends on how well it is made. The foot valve is mounted on a separate piece and must fit tightly(Fig. 42). It will probably have to be glued or otherwise secured in place to hold the pressure of the column of water. If the water is very dirty, so that objects clog the foot valve and cause it to leak, a screen may be necessary.

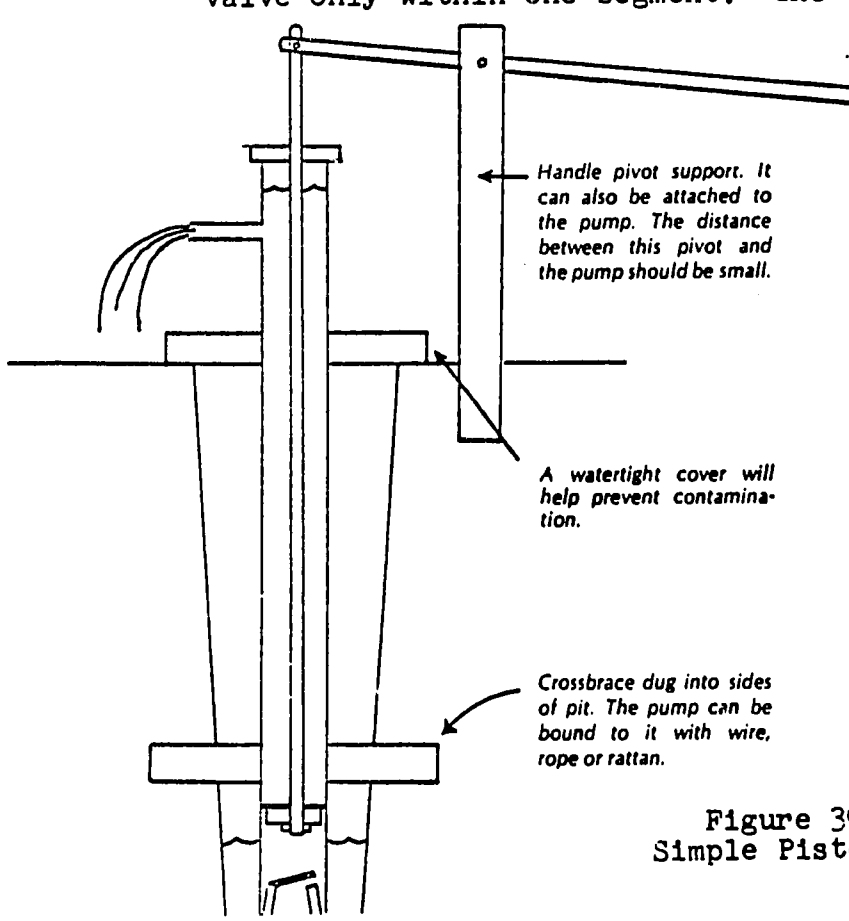

Figure 39
Simple Piston Pump

A simpler moving valve can be made by wrapping a cone of rubber or leather around the end of a stick. This is a design used in commercial bilge pumps for small boats. (Fig.40)

This pump can be used as is, holding the pipe with one hand and moving the stick with the other. For use in one spot, mount it in a frame to hold it firm and off the bottom of the well, and add a handle, top cover and spout.

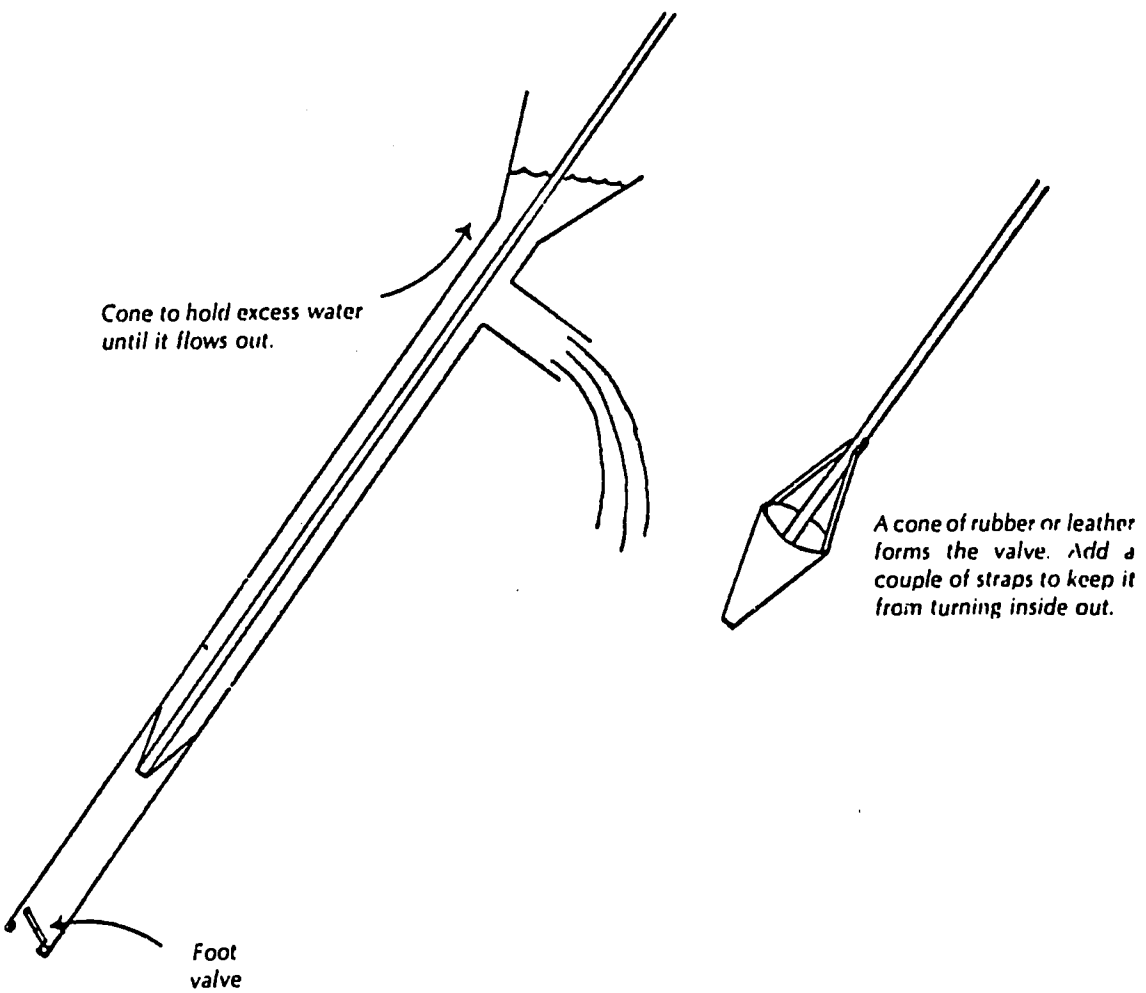

Figure 40 Typical Bilge Pump

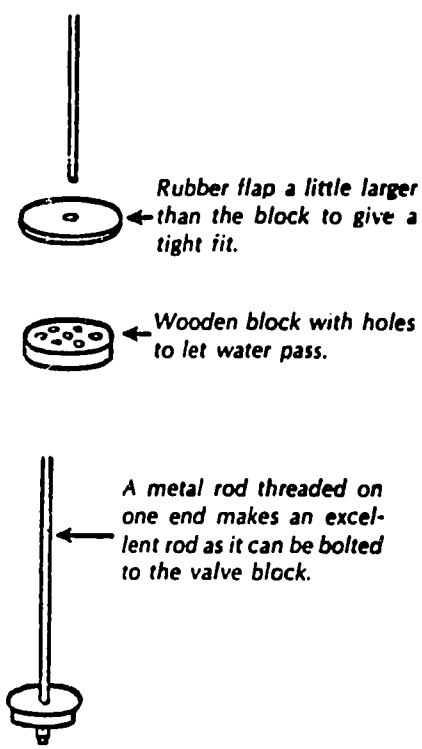

Figure 41 Piston Pump Moving Valve

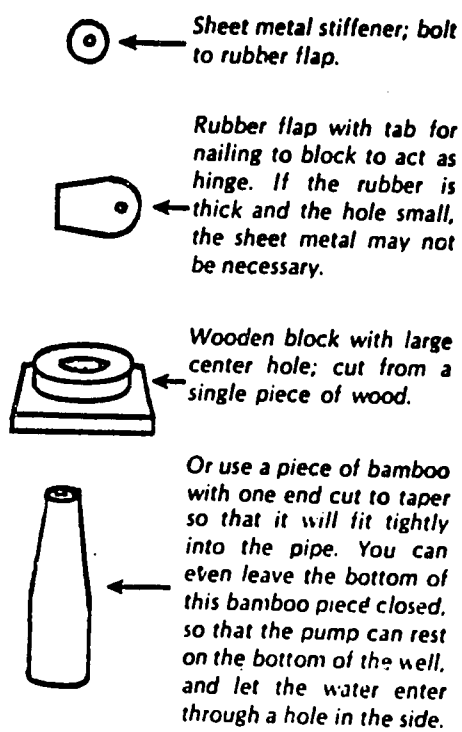

Figure 42 Piston Pump Foot Valve

Sanitary Rope and Bucket Mechanism

This design, for use with dug wells, is simple to maintain. It could be loosely classified as a "displacement pump" for use when other, more efficient pumps are not available. When carefully built, this simple pumping arrangement gives good service, and will protect the well from pollution.

Because it is fairly simple, details can be easily changed to fit local conditions.

For ease of maintenance, the cover should be removable. A reinforced concrete slab four inches thick and three feet in diameter can be moved by two men.

The obvious disadvantage of this type of water-lifting arrangement is its low capacity (gal/min of yield). But as a village community water source, it will perform most satisfactorily.

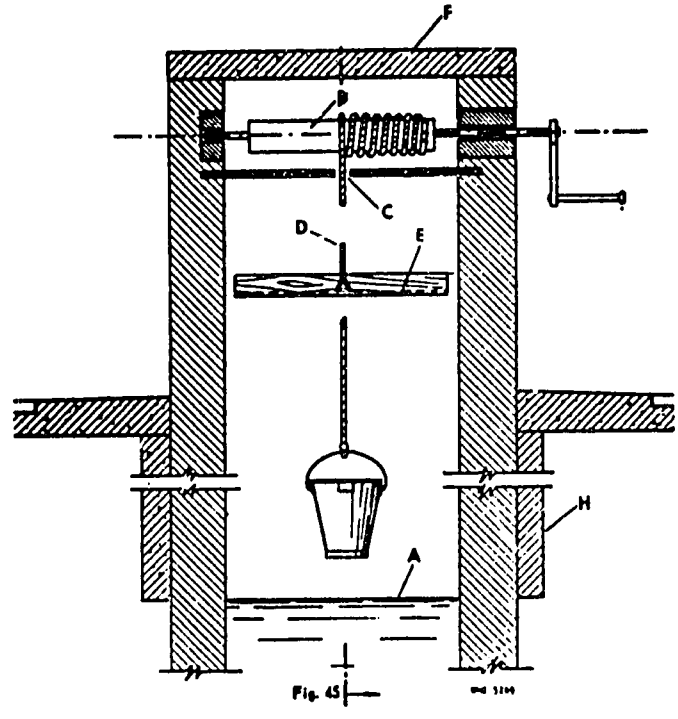

A = Water level in well
B = Windlass
C = Guide hole for rope
D = Stop hook
E = Trough
F = Tight cover, removable
H = Compacted clay, or concrete grout

Figure 43 A sanitary rope and bucket well (I)

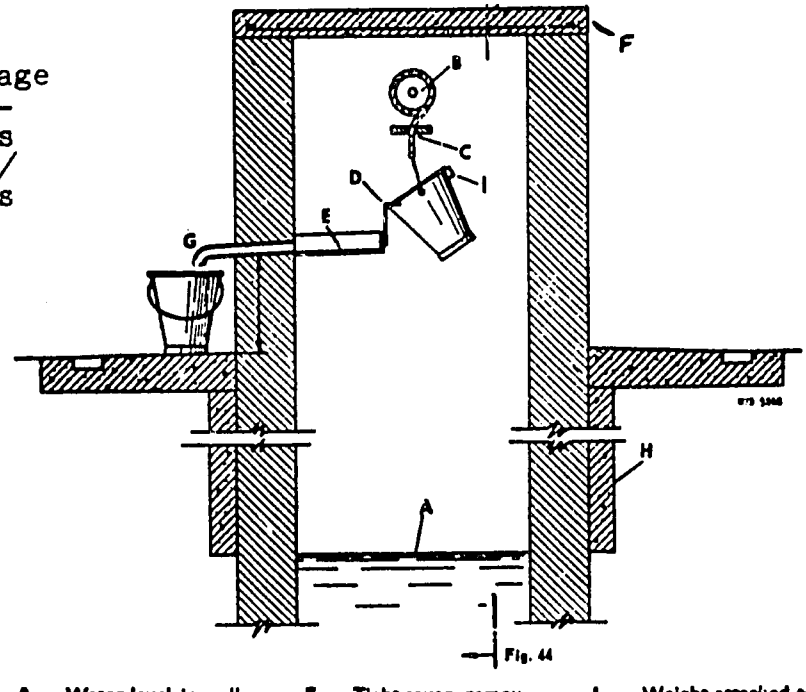

A = Water level in well
B = Windlass
C = Guide hole for rope
D = Stop hook
E = Trough
F = Tight cover, removable
G = Discharge opening
H = Compacted clay, or concrete grout
I = Weight attached to top side of bucket to make it tilt when bucket is lowered onto water surface

Figure 44 A sanitary rope and bucket well (II)

In general, water can be brought from a well to the surface in one of three general ways:

1. Lifting water by suction operation to the level of a pump located above the source. Such an example is the pitcher pump where the piston and cylinder are located at the discharge point.

2. Raising the water by forcing it to an elevation above a pump which is located in the source. An example of this class is the deep well pump where the piston and cylinder are located in the water and a mechanism located over the well to operate the piston thus raising the water above the cylinder to the surface or discharge point.

3. A combination of both suction and force in discharging water at a discharge point above the well. An example of this class is the pump with the cylinder down in the well not over 22 feet above the water source. Thus suction lift would raise the water to the cylinder and force would raise it from there to the discharge point.

The pumps on the preceding pages each illustrate one of these three methods. Only the simplest pumps have been described. This discussion should not be interpreted as a complete summary of all pumps that are available. Although it appears that an almost infinite number of different pump designs are available, most communities needing a well construction program must rely on simple, inexpensive, and easy to maintain pumps. Pumps may be considered impractical in many areas because of the difficulty in performing maintenance on them. To be successfully introduced a pump must be economical to buy and easy to install and maintain. Since local conditions vary and each individual situation has its own special considerations, great care should be taken in the selection of a pump. If more sophisticated pump designs are desired, you should consult the WHO monograph on rural water supplies and the Water Well Handbook before making a final selection.

II-A: TYPES OF PUMPS

LESSON NO. 1

LESSON OBJECTIVE: Identify the various types of pumps used in individual water systems and describe the general methods of operation of each type.

TOPIC	INSTRUCTIONAL PROCEDURE	SUPPLEMENTAL MATERIALS / RELATED READING
Pump Categories	1) Identify the two categories of pumps: a. Displacement b. Velocity 2) Briefly describe the general method by which each moves water from a well.	
Types of Pumps	1) Describe each of the following types of pumps: a. Positive Displacement hand pumps, b. Chain or continuous bucket c. Centrifugal d. Deep-well turbine e. Jet. 2) Illustrate the various major components of each type of pump. 3) Have trainees experiment with each type of pump to further examine how each works.	Examples (actual pumps or illustrations) of each type of pump.

II-A: TYPES OF PUMPS

LESSON NO. 2

LESSON OBJECTIVE: Discuss the Advantages and Disadvantages of the various types of pumps.

TOPIC	INSTRUCTIONAL PROCEDURE	SUPPLEMENTAL MATERIALS / RELATED READING
Shallow and Deep-Well Operation	1) Explain why pumps are able to only lift water a practical limit of 22 feet. 2) Explain how deep-well pumps are able to increase the practical lift of water.	Cross-section illustrations of shallow and deep-well pumps.
Evaluating Pumps	1) List the factors most commonly used to describe the water-lifting capabilities of various types of pumps: a. Usual well pumping depth b. Capacity c. Efficiency d. Simplicity of operation e. Ease of maintenance f. Cost g. Type of power required.	
	2) Have trainees measure these characteristics for various types of pumps. (Note: If pumps are not yet installed for this equipment, the instructor should move on to pump installation, returning to this lesson once pumps have been installed.)	Field demonstration pumps already installed.
	3) Have trainees summarize the operating characteristics of each type of pump. 4) Identify the relative advantages and disadvantages of each type of pump.	Section II-A, this manual; Table: Advantages and Disadvantages of Various Types of Pumps.

SECTION II-B

PUMP SELECTION, INSTALLATION AND MAINTENANCE

OVERVIEW:

Once the trainees have been exposed to the various types of pumps available for use in individual or village water systems, they have to be able to identify those factors in a given situation that have a bearing on the pump that will finally be selected.

In addition to identifying the factors that influence the selection of the proper pump, the rules for installing the pump properly are described. Proper installation is important to guard against contamination of the well, and this point should be stressed throughout this section. Whether the trainees can install a pump properly can be tested by having them install pumps for the wells they have constructed.

One of the major points to stress in this section is that the pump will continue to serve the people in the village long after the Volunteer has left. Therefore, in addition to selecting a pump that is simple to operate, the PCT must be able to make simple repairs to pumps, as well as prepare a maintenance schedule for the pump. By providing time for the PCT to repair instructor-inflicted pump mal-functions, he will become thoroughly familiar with pump operation and repair.

B. PUMP SELECTION, INSTALLATION AND MAINTENANCE

OBJECTIVE: Select and install an appropriate well pump, insuring that all sanitary safeguards have been taken during installation.

TASKS:

1. Of all pumps available, assess the merits of each relative to the well for which it is to be used.
2. Select the pump to be installed, stating reasons to justify the selection.
3. Prepare an order form for the pump, specifying the needed information to insure proper delivery.
4. Identify the sanitary safeguards to be taken in installing the pump.
5. Install the pump properly.
6. From the manufacturer's service book included with the pump, identify all maintenance procedures and required materials.
7. Prepare a maintenance schedule sheet including Task, Frequency, Tools and/or Materials Required, Procedure, and Precautions to be taken.
8. Design a form to record the fact that a maintenance task was performed, the date, by whom, and comments.
9. Perform all normal maintenance procedures.
10. If a malfunction occurs, assess the extent of the malfunction to determine appropriate corrective action.

FUNCTIONAL SKILLS:

1. Identify characteristics of wells that limit the type of pump to be selected.
2. Illustrate correlation between well pumping requirements and characteristics of different pumps.
3. List items which should be included in any pump equipment order form.

4. Follow directions for pump installation.

5. Define and illustrate the procedures which insure a sanitary installation.

6. Summarize technical literature.

7. Identify the most efficient methods available locally for insuring a satisfactory maintenance program.

8. Identify the major components of pumps.

9. Disassemble, repair, and reassemble commonly used pumps.

10. Distinguish between major and minor pump malfunctions.

TERMINAL PERFORMANCE TESTS:

1. Given a number of manufacturers' pump data sheets (catalog descriptions) prepare order forms, specifying the requirements necessary to satisfy the purchaser.

2. In a field exercise (well location site), determine the type of pump to be installed, prepare a written installation plan, and install the pump as planned.

3. Given the manufactuers' service book for a pump, prepare a maintenance schedule sheet including all items necessary for a complete record to be kept.

4. In a laboratory exercise, given a number of pumps in need of repair, assess the degree of damage for each pump, repair those possible, and identify those requiring a skilled mechanic.

PUMP SELECTION AND INSTALLATION GUIDELINES

SELECTING THE RIGHT PUMP

Although it is not possible to establish precise rules for selecting a pump for a particular installation, it is possible to identify a number of fundamental considerations:

(1) Ease of maintenance and availability of replacement parts (if skilled, reliable mechanics are not available locally, it is important to select a pump that needs infrequent care and is simple to repair).

(2) The initial cost of the pump and its power equipment.

(3) Types of power available locally.

(4) The capacity and lift required (this is matched against the yield of the well and the daily needs of the users).

(5) Difference in elevation between ground level and water level in the well during pumping. (Enables you to determine whether a shallow well or deep well pump is necessary.)

(6) If a storage tank is used, its size and/or pressure requirement.

(7) The number of pumps to be installed in the local area (when possible, standardization of pumps reduces the number and diversity of spare parts needed on hand)

As a general guide, the following points should be kept in mind when selecting pumps for rural water-supply systems:

(1) Pumps in which all moving parts are above ground and easily accessible are preferable and will, in most instances, give the best service simply because they are easier to maintain with means available in rural areas. However, if qualified maintenance can be assured, pumps with submerged cylinders enable pumping to greater depths.

(2) Where motor power is used, efficiency is a very important factor; and the more expensive the power, the more important becomes the efficiency. In many places a new pump installed to replace an old, inefficient one would pay for itself within a very short time simply by reducing the cost of motor operation.

(3) The pump selected should be one for which repair and replacement parts can be obtained easily and promptly.

(4) The pump equipment should be so constructed and installed as to prevent the entrance of contaminating water or material either into the well or into the water that is pumped.

(5) The size of the pump is most important. The pump should have a capacity equal to the safe yield of the well--or slightly less--so that it will make use of the well's potential and not over-pump it. A higher capacity pump than needed will merely draw the water level down in the well more quickly causing the system to pump air or lose its prime. Continued lowering of the water level by pumping may cause other difficulties with the well itself (decrease in yield, cloudy water, sand in water).

ORDERING PUMPS

When ordering or inquiring about a pump, the following information should be specified:

(1) the inside diameter of the smallest part of the casing or hole in which the pump is to be installed;

(2) the static water level in the well, or feet below land surface;

(3) the desired yield, in gallons per minute;

(4) the draw-down in feet or the lowest water level expected when pumping at the desired yield (in the case of a well, this should either be measured during a test of the well, or carefully estimated from the best available information on similar wells nearby);

(5) the desired water pressure at ground level; i.e. the operating pressure of any pressure tank (if any), the height of any elevated tank plus the friction in the delivery pipe;

(6) the type of power available (if electricity, full specifications--for example, 220 volts, 3-phase, 60 cycles, alternating current--should be given);

(7) the total depth of the well.

It should also be stated whether the well is straight, at least down to the depth where the pump is to be set.

For all reciprocating deep-well pumps, whether operated by hand or by one or another source of power, the important feature is the extractable cylinder. By specifying a cylinder size smaller than the riser pipe, it is possible to use a submerged cylinder with operating parts that can be drawn up through the riser pipe for inspection, repair, or replacement. The alternative is to use a riser pipe of the same diameter as the suction or tail pipe and to draw the whole system when repairs are needed. Another important point is to require that the handle, fulcrum, and bracket on such a pump not be made of cast iron, which is brittle and breaks under repeated shock or impact, as it often does in operation or transport.

SANITARY INSTALLATION GUIDELINES

The pump equipment for either power-driven or manual systems should be constructed and installed to prevent the entrance of contamination or objectionable material either into the well or into the water that is being pumped. The following factors should be considered.

1. The pump head or enclosure should be designed to prevent pollution of the water by lubricants or other maintenance materials used during operation of the equipment. Pollution from hand contact, dust, rain, birds, flies, rodents or animals, and similar sources should be prevented from reaching the water chamber of the pump or the source of supply.

2. The pump base or enclosure should be built so that a sanitary well seal can be installed within the well cover or casing.

3. When possible, the pumping portion of the assembly should be placed near or below the static water level in the well so that priming will not be necessary.

4. A pump drainage within the well, when necessary, should be possible for protection from frost.

5. Design the well site so that, overall, necessary maintenance and repair, including overhead clearance for removing the drop pipe and other accessories is made relatively simple.

When planning for sanitary protection of a pump, specific types of installations must be considered. The following points should be considered for the different types of installations.

OVER-THE-WELL INSTALLATION

The most common type of pump installation is the over-the-well type. The pump should be placed on a raised, concrete base rising at least 4 inches above the floor (or concrete slab) or on an approved metal base or pumpstand furnished with the particular pump. The top of the base should slope to allow for the drainage of any water that may collect on it.

HAND PUMPS

The pump heads on most force pumps are designed with a stuffing box surrounding the pump rod. This design provides reasonable protection against contamination. Ordinary lift pumps

with slotted pump head tops are open to contamination and should be avoided whenever possible. The pump spout should be closed and directed downward.

The pump base should be designed to serve a twofold purpose: first, to provide a means of supporting the pump on the well cover or casing top; and second, to protect the well opening or casing top from the entrance of contaminated water or other harmful or objectionable material. The base should be of the solid, one-piece, recessed type, cast integrally with or threaded to the pump column or stand. It should be of sufficient diameter and depth to permit a 6-inch well casing to extend at least one inch above the surface upon which the pump base is to rest. The use of a flanged sleeve imbedded in the concrete well cover or a flange threaded or clamped on the top of the casing to form a support for the pump base is recommended. Suitable gaskets should be used to insure tight closure.

The protective closing of the pump head, together with the pollution hazard incident to pump priming, makes it essential that the pump cylinders be so installed that priming will not be necessary.

POWER PUMPS

All well casings for power-pump installations should extend at least 6 inches above the pumproom floor or platform slab. The base plate of a power-operated pump placed over the well should be designed to form a watertight seal with the well cover or casing. The base should be recessed to permit the casing or pipesleeve to extend into it at least 1 inch above the foundation upon which the pump base rests. The annular space between the casing and the suction and/or discharge pipe should be closed tightly with an acceptable sanitary well seal. In installations where an open-type pump is used, the well casing or pipesleeve should extend at least 6 inches above the floor of the pumphouse. Powered pump equipment is the most commonly used type for well installations; but, of course, when power is not available hand-operated pumps are used.

Many times, when power pumps are used, a pressure water system is built. This system consists of a water pump, electric motor or engine to operate the pump, a closed metal storage tank into which water is pumped, and a number of valves and switches. Further details on the construction of pressure water systems are available in the following publications:

U. S. Dept. of Health, Education, & Welfare: Manual of Individual Water Supply Systems.

Bulletin of the Agricultural and Mechanical College of Texas: Rural Water Supply and Sewerage, Part II, Vol. 77, No. 10.

PUMP MAINTENANCE

Any pump that is purchased from a manufacturer is usually furnished with instructions for proper servicing. If these instructions are properly transmitted to the local villagers, many hours of trouble shooting, and costly replacements may be avoided.

As soon as the pump is put into operation you should take the time to prepare a maintenance schedule sheet for person(s) responsible for the continual operation of the pump. In most cases this person will not be a skilled mechanic, and care should be taken to be as clear as possible. (in other words, time will have to be taken to "translate" the manufacturer's instructions). The maintenance schedule sheet should include the following items:

TASK (identify the job to be completed: i.e. oiling handle bolt. If possible illustrate the positions of the handle bolt in a diagram).

TOOLS AND MATERIALS REQUIRED

PROCEDURE (a step-by-step description of what to do)

PRECAUTIONS TO BE TAKEN

If possible, malfunctions that commonly occur should also be defined, with the required corrective action to be taken. The items above would again be useful. In addition a description of the SYMPTOM should be included, as well as whether this is a simple malfunction or one requiring a skilled mechanic.

II-B: PUMP SELECTION, INSTALLATION AND MAINTENANCE

LESSON NO. 1

LESSON OBJECTIVE: Discuss factors to be considered when selecting a pump for a small individual water system.

TOPIC	INSTRUCTIONAL PROCEDURE	SUPPLEMENTAL MATERIALS / RELATED READING
Pump Selection Factors	1) Ask trainees to list what factors they can think of that should be considered when selecting a pump. 2) Once their comments have been recorded and discussed, list the factors that have been identified in Section II-B: a. Ease of maintenance and availability of replacement parts b. Initial cost of pump and its power equipment c. Types of power available locally d. Capacity and lift required e. Drawdown of well during pumping f. Size and pressure requirements (if storage tank is used) g. Total number of pumps to be installed in the local area. 3) Establish a set of hypothetical factors and have students individually select a pump based on these requirements. 4) Identify the pump that should have been selected and explain the reasons for that selection.	
Guide Lines for Selecting Pumps in Developing Countries	1) Identify the points that should be in mind when selecting pumps for use in rural villages. 2) Have trainees rate the pumps above based on these points. 3) Summarize and discuss their ratings.	See Text, Section II-B, this manual

II-B: PUMP SELECTION, INSTALLATION AND MAINTENANCE

LESSON NO. 2

LESSON OBJECTIVE: Discuss the information that must be given when ordering a pump.

TOPIC	INSTRUCTIONAL PROCEDURE	SUPPLEMENTAL MATERIALS / RELATED READING
Pump Ordering Procedure	1) Identify the information that must be given when ordering a pump. (This information assures the receipt of a pump that ; will accomplish the task for which it has been selected):	
	a. The inside diameter of the smallest part of the well casing;	Tape measure.
	b. The static water level in the well	
	c. The desired yield (GPM)	
	d. Drawdown	
	e. Desired water pressure at ground level	
	f. Height of any elevated storage tanks	
	g. Type of power available	
	h. Total depth of the well	
	i. Depth to which the well is straight	Plumb line.
	2) For the measurements not already obtained, demonstrate how to determine each item.	
	3) Have trainees gather this information for the well they have constructed.	

II-B: PUMP SELECTION, INSTALLATION AND MAINTENANCE

LESSON NO. 3

LESSON OBJECTIVE: Identify and demonstrate the application of sanitary guide lines to be followed when installing a pump.

TOPIC	INSTRUCTIONAL PROCEDURE	SUPPLEMENTAL MATERIALS / RELATED READING
Sanitary installation guide lines	1) Discuss the reasons why care must be taken to install the well in a manner that will protect the well against entrance into the well of unwanted materials. 2) List and describe the five factors to consider when building the well that will aid in the sanitary installation. 3) Discuss and illustrate the proper method of installing pumps--both hand and power--over the well. 4) Once the pumps have been selected, each crew should install a pump for their well, satisfactorily adhering to all proper sanitary requirements.	This discussion should occur at a well site where these factors can be pointed out.

II-B: Pump Selection, Installation, and Maintenance

LESSON NO. 4

LESSON OBJECTIVE: Discuss the need for, and methods of, establishing a clearly defined maintenance schedule that can be followed once the PCV has left the assignment.

TOPIC	INSTRUCTIONAL PROCEDURE	SUPPLEMENTAL MATERIALS / RELATED READING
Reasons for establishing a maintenance schedule	1) Emphasize the point that the term of service of each trainee will be relatively short compared to the anticipated life of the pumps they will be installing. 2) Discuss the differences between emergency repair and preventive maintenance, especially as it affects the life of the pump, cost, breaks in service, and loss of trust by the users.	
Method of establishing preventive maintenance schedule	a 1) Have trainees examine manufacturers' guide books to determine their applicability for use with local people. 2) Discuss strengths and weaknesses of the manuals regarding their use by local people. 3) Have trainees prepare a maintenance schedule for a pump, for use by villagers who will have to maintain their pumps. Schedule should include: a. Description of Task b. Tools and Materials required c. Procedure (step-by-step) d. Precautions to be taken	Sample pump maintenance books from manufacturers. As part of language training, these should be written in the language being taught during the training program.
Repairing Pumps	1) Create simple malfunctions to a number of pumps, and demonstrate how to correct them. 2) Have trainess practise fixing simple breakdown to pumps. 3) Have each trainee prepare a chart which describes SYMPTOM in addition to items A-D above.	A number of pumps in need of simple repairs.

SECTION II-C

POWER FOR PUMPS

OVERVIEW:

The most significant point to consider in the selection of a pump is the kind of power available to drive it. As pointed out in the text of this section, gravity is the cheapest source of power--and the one most often impossible to utilize. In addition to gravity, available power may include man or animal; wind; steam; electricity; or internal combustion engines.

Because the major cost of pumping is primarily the power needed to drive the pump, the PCT's should be familiar with all of the sources of power. In the field the cheapest practical source of power is usually hand power; therefore, each trainee should be given the opportunity to install a hand pump.

Field observations of various power-pump combinations should be scheduled if at all possible.

C. POWER FOR PUMPS

OBJECTIVE: Consider all the types of power locally available for operating the well pump, select the most appropriate power source, and install.

TASKS:

1. Identify the types of power locally available.
2. Determine the value of each type, relative to local resources and requirements.
3. Select the type of power to be used.
4. Prepare a plan for installing the power source.
5. Install the power mechanism to the pump already installed earlier.

FUNCTIONAL SKILLS:

1. List all the types of power that may be used for pumping.
2. Identify characteristics of each: relative costs; advantages and disadvantages.
3. Describe installation steps for each type of power source.

TERMINAL PERFORMANCE TESTS:

1. In a written exercise, list all the types of power available for pumping purposes, and the characteristics of each.
2. Using Task #5, perform the installation procedure as planned.

POWER FOR PUMPS

The cost of pumping is mainly the cost of power to operate the pump, so that in areas of limited economic means, the proper use of power is of the utmost importance. Anything that Nature has provided should be used to full advantage. As a matter of fact, the type of power available will be in many instances, the determining factor in the design of the rural water-system.

TYPES OF POWER

Man and Animal Power

Man power and animal power are the oldest, and in many places the only, kind available. Animal power can be completely adequate and should not be overlooked not underestimated.

Gravity

Gravity is the cheapest source of power when it is possible to use it. Extensive effort should be made to find a solution in which water will flow to the consumer by gravity. Considerable extra initial cost is justified for such a solution. Usually an economic formula can be worked out based on the life and cost of pumping and equipment as compared to the cost of a pipeline to bring in water by gravity. In hilly, rough country there are ample opportunities for gravity supplies. Almost without exception small towns with gravity systems are satisfactorily supplied with water at all times. Local materials can often be used to build gravity pipelines, thus further reducing the project cost.

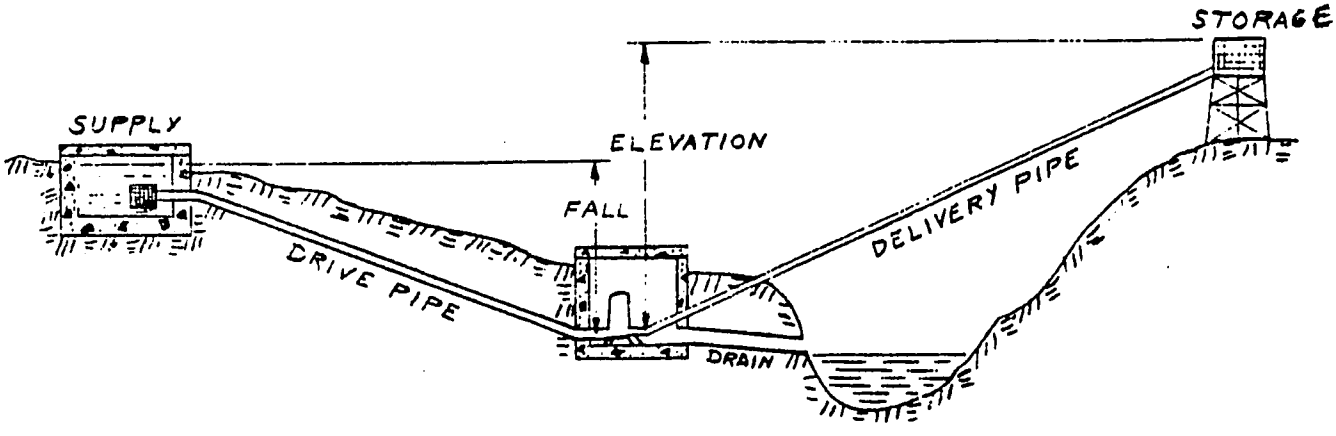

Figure 45 Gravity Water System

Wind

Wind is another very cheap source of power which should be given careful consideration in either individual or community supplies.

Steam

Steam is usually not practical; but in areas with dense vegetation and a lack of other resources, it may be a good possibility. Small woodburning boilers are not unreasonably expensive; and in jungle areas where wood is being produced prolifically, this source of power may be a good solution. A wood-burning boiler is a cheap and simple installation to maintain.

Electricity

Electricity is to be preferred if it is available at reasonable cost from some central supply. Electric motors are reasonably low in original cost and are cheap to operate. They require very little attention and give long service. Electricity has a very wide range of application, from the smallest fractional horsepower motors to "giants" far beyond the scope dealt with here. Small water-supplies in towns and homes require small units whose needs are perfectly met by the use of electric motors. But it is unwise, in most rural areas, to attempt to generate electricity for the specific purpose of driving electrical equipment. Small electric generating units often need repair, especially in the tropics, and need so much specialized maintenance, that their installation should not be contemplated except in extremely rare cases.

Internal Combustion Engines

Internal combustion engines (gasoline, diesel, kerosene), in spite of being expensive and, in some instances, difficult as well as costly to maintain, are the types of motor power which are often required for most small community supplies in rural areas. Diesel engines are generally the best from all points of view, even though they are the most expensive in original cost. Heavy, low rotary-speed, diesel engines can give long service with a minimum of maintenance and low operating cost. Gasoline and kerosene engines are high-speed motors with short life and high operating cost and are useful only in certain places--Venezuela, for example where gasoline is cheap. Besides the cost of power, the following items must be considered when the actual cost of pumping water is calculated: interest on, and depreciation of, the equipment; the wages of operators; the efficiency of the pumps; and the depreciation of the building cover.

Windmills

Energy which nature has provided, such as the wind, should be taken advantage of whenever possible. In many Northern European and Western Hemisphere countries, wind energy is used for pumping water for farms, homes, and small communities. This method (see Fig. 46) is excellent for obtaining a steady flow of water from a well at a very low cost.

For proper operation, the following conditions must be met:

(1) winds of more than 5 mph during at least 60% of the time;

(2) available windmill equipment;

(3) wells that can be pumped for many hours' duration each day;

(4) storage capacity of three days' supply (or more) to take advantage of long pumping periods and to provide for calm periods when there is no wind.

(5) clear sweep of wind to the windmill. This can be obtained by the use of a tower to raise the windmill 15-20 ft. or more above surrounding obstacles.

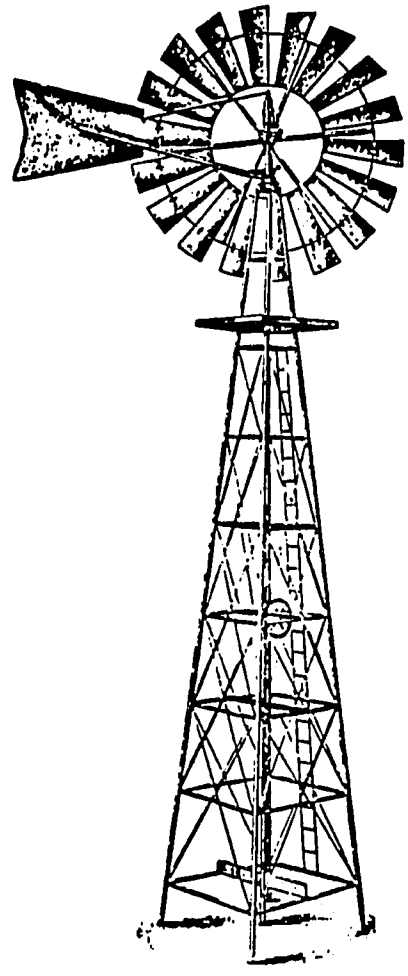

Figure 46 Windmill

The pump used in connection with windmills is usually of the reciprocating type and has an extension of the piston rod above the upper guide with a shole for connection with the pump rod from the windmill (see Fig. 47). Provision may also be made for pumping by hand or for using animal power when extremely long periods of calm are likely to occur. The gearing on windmills varies with manufacturers and wind conditions: some pump one stroke with each revolution of the mill, while others pump one stroke with three or four revolutions. The former requires more and higher-velocity winds; the latter is advantageous in areas where there are winds of low velocity much of the time.

All modern mills are designed in such a manner as to ensure that the windwheels will pivot freely and answer quickly to changes in the direction of the wind. They are also equipped with a "pull-out" system which will automatically turn the windwheel off to one side when the velocity of the wind is excessive--i.e., 30-35 miles per hour. Provision may be made for lubrication of the mechanism by an oil-pump system operated from the ground.

The size of windmills is usually expressed in terms of the diameters of their windwheels. Sizes of 5 ft. to 30 ft. may

be obtained from manufacturers. A 10 ft. mill in combination with a reciprocating pump cylinder 3-in. in diameter will produce about 200 gal. of water per hour with a wind velocity of 10 miles per hour. Similarly, a 25-ft. mill in combination with a 6-in. diameter pump cylinder could raise up to 16,000 gal. per day.

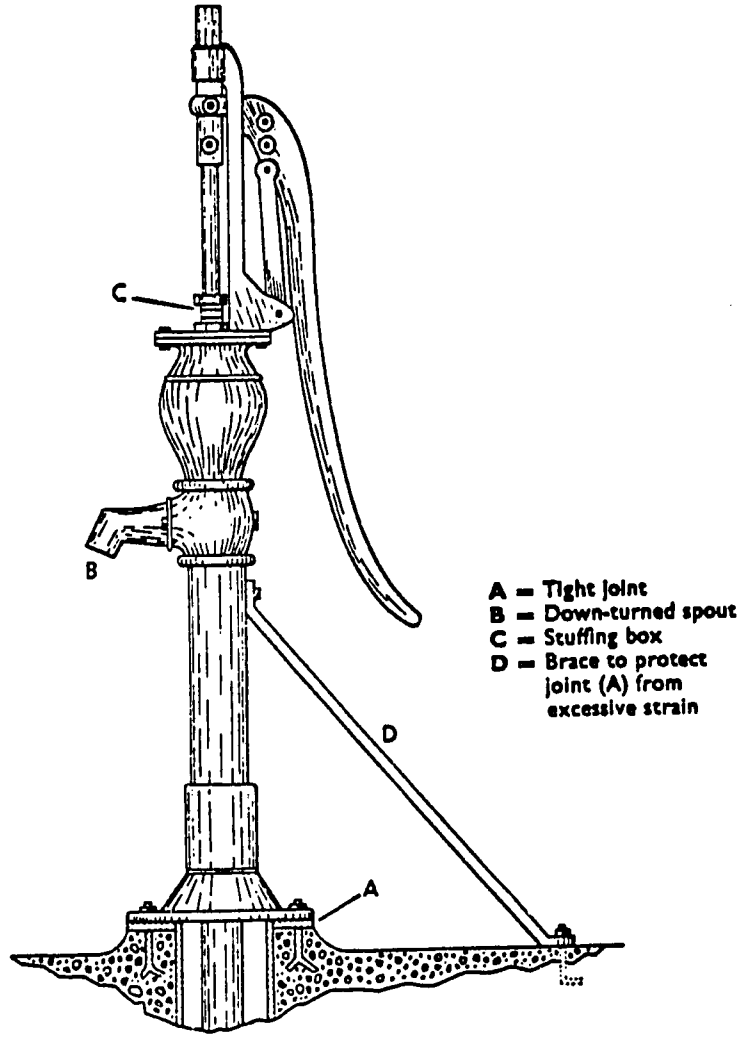

Figure 47 Properly designed hand or windmill pump with cylinder above ground.

When ordering a windmill, it is important to state the average velocity of the wind, in addition to the data mentioned under "Selection of pumps". Windmills will operate with wind velocities as low as 4 miles per hour. In places where this equipment must be imported from distant manufacturing countries, it is well to plan for the construction of a strong tower, at least, from local materials and to import the rest.

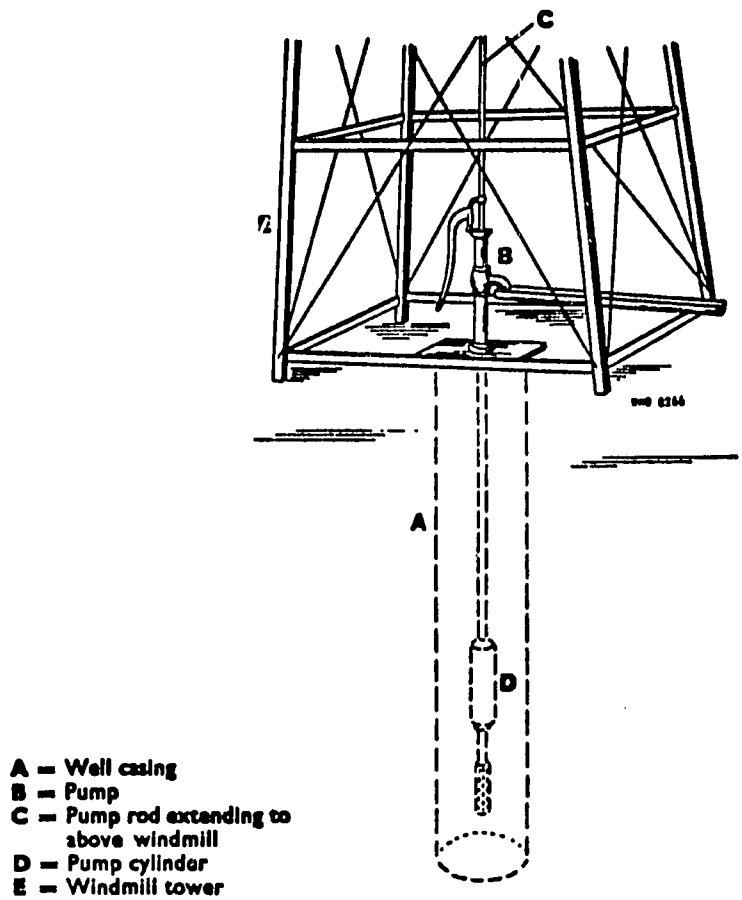

Figure 48 Typical arrangement of windmill tower, pump and well

II:C Power of Pumps

LESSON NO. 1

LESSON OBJECTIVE: Describe the Types of Power Available for D iving Pumps.

TOPIC	INSTRUCTIONAL PROCEDURE	SUPPLEMENTAL MATERIALS / RELATED READING
Types of Power	1) List and describe the characteristics of the types of power used to drive well pumps.	
	2) If possible, have trainees observe the application of each type of power in the field.	
Advantages & Disadvantages of each type	1) For each type of power, discuss the advantages of their applications in rural or village systems.	
	2) From the list of all types, rate the order of priority in which each type should be considered for use in developing countries.	
Installation	1) If time and resources permit, have trainees connect each type of power to an appropriate well.	
	2) More realistically, have each trainee install a pump with the appropriate source of power connected.	Electric motors, interna. combustion engines.

SECTION III-A

CONDUCTING A PRELIMINARY INVESTIGATION

OVERVIEW:

Section III concentrates on the skills needed to assess a village or rural area to determine what its local water requirements (needs) are, and to evaluate the water potential of the area. The emphasis here is on human relations. The last subject covered in the training program, it is the first task that will be facing each PCV as he reaches his location assignment.

Two purposes form the basis of the preliminary investigation:

(1) To conduct a complete population and geographic survey of the area to assess the resources available for the implementation of a well construction program;

(2) To become completely familiar with the community in which the volunteer will live and work for two years. If done properly, the information obtained in this survey will have an impact far beyond the well construction program.

The emphasis during training should be on the methods of collecting and recording data.

SECTION III: DEFINING A WATER WELL PROGRAM

A. CONDUCTING A PRELIMINARY INVESTIGATION

OBJECTIVE: Conduct an area survey to determine local water requirements based on present use, existing sources, future growth projections, and the sites of all potential well locations.

TASKS:

1. Prepare a census plan of the local community; include the following: number of families or persons; number and type of dwellings; type and yield of existing water sources; distribution and location of population and water sources; economic, geographic, and social factors affecting water usage; legal considerations relative to water use.

2. Determine most appropriate methods for collecting data; decision will be affected by such factors as local customs, available valid information sources, printed material resources, personal abilities.

3. Collect data.

4. Analyze data to determine: present water usage; present source yield, present water needs; future community growth potential, future water requirements.

5. Based on survey findings, establish local requirements criteria to be considered in defining final well construction plan. Criteria should be established for quantity, quality, location, and usage requirements.

6. Review reports (if any) of geological studies of the area which indicate the nature and possibility the characteristics of the underlying formations.

7. Examine existing wells to determine their profiles, production, water quality.

8. Map the water table elevation of the surrounding area.

9. Conduct a survey of area to identify nature, distance, and direction of sources of pollution in relation to all potential well sites.

FUNCTIONAL SKILLS:

1. Identify factors significant to a survey on local water requirements.

2. Recognize various types of water sources.

3. Estimate distance and scale this distance on a sketched map.

4. Measure water yield of a given water source.

5. List possible methods for collecting survey data.

6. Identify factors which indicate possible growth patterns.

7. State planning criteria and be able to justify.

8. Describe geologic characteristics and the hydrologic cycle as they relate to the occurrence and distribution of sub-surface water.

9. Recognize sources of pollution and define action to eliminate such sources.

10. Evaluate the quality of water by determining the probably chemical and physical characteristics of the potential sources under investigation, based on geologic nature of the water sources.

11. Identify the chemicals and minerals commonly found in water, the effects caused by excessive concentrations of each, and required treatment methods to reduce an excessive concentration to a permissible level.

TERMINAL PERFORMANCE TESTS:

1. Given a list of statements deseribing a rural community, be able to identify those statements that should be considered in assessing local water requirements.

2. In a field exercise, draw a topographic map of an area one square mile in size, including all dwellings, major geographic features, roads, bodies of water, sources of pollution.

3. Using the map drawn in the step above, locate potential well sites, defending the selections made by correctly summarizing the geologic considerations which were used in selecting these sites.

4. Measure the yield (volume of water available) of a well.

5. Given a description of a rural village, identify most probable growth patterns, and establish criteria to be used in planning a well program for this village

6. From a report of the water tested in a laboratory, determine whether the water can be used for drinking purposes; if excessive coliform bacteria is present, locate the source of pollution and propose corrective action; propose treatment measures to lower the chemical and physical content of the water to a permissible level.

DEFINING A WATER WELL PROGRAM

The water requirements are determined by simply matching the local water requirements of a village against the findings of a survey indicating what's available--both in fact and potentially. Local requirements are defined by identifying:

(1) How much water is presently required?
(2) What sources are presently available?
(3) What future growth projections can be forecast?
(4) What potential water sources exist?

It is most important that a survey of the locale be made if such a study has not already been completed by the time you arrive.

LOCAL WATER REQUIREMENTS

One of the first steps in defining the local water requirements is to prepare a census plan for the local community. This plan, if properly completed, will provide the data needed to assess the present situation of the village relative to water usage and requirements. The following elements of information need to be gathered:

(1) Number of families and/or persons in the village

(2) Number and type of dwellings (obviously, stores, small industries, etc. will require more water than the typical family dwelling).

(3) Type location and yield of existing water sources (be prepared to discover that well re-construction could quite possibly provide all the water needed.)

(4) Distribution and location of population relative to water sources.

(5) Economic, geographic, and social factors affecting water usage (how will wells be paid for--by co-operatives, by individuals? Are community services family, communal, or government controlled? Are there any social customs that will affect water usage--Monday wash days, farming by irrigation, long dry seasons?)

(6) Legal considerations relative to water use. (local laws governing ground water usage? This is often found in dry areas where water is at a premium. Rights-of-way to tap water on communal property.)

Once these, and other points significant to a particular situation, have been identified, you need to carefully consider how such information will be collected. It is during this phase of initiating a well construction program that you will be able to learn much about the community, expose yourself to a large number of people, and exhibit the fact that you're there to help effect change for the better. But, be sure to give careful consideration as to how you will collect this information. Improper methods of collecting this information could also create an atmosphere of distrust concerning your role in the villages. Before starting, be sure that you are aware of customs, traditions, and concerns that people might have in the village. If there is one person who speaks for the whole village, start there. If past studies are available, work from them. And most important, establish yourself as a builder of wells before you begin to compile statistics. If you were to mistakenly be thought of as a tax collector, your final statistics would almost certainly show a village much smaller than actually existed. If you remember that the people in the village will not know that you can help them until you have convinced them, you should have little trouble initiating the survey. The preliminary survey, if conducted diplomatically and persuasively, will stimulate a strong interest among the members of the local community for the construction of water wells.

DATA ANALYSIS

Once the necessary data has been collected, a number of factors must be determined to insure the selection of the most suitable type of well. These factors include:

PRESENT WATER USAGE:

The survey should reveal what percentage of the water is used for drinking purposes, irrigation, sanitation, cooking, washing, etc.

PRESENT SOURCE YIELD:

From the water sources that were located, how much water is available. This should be analyzed by usage. (The water for irrigation need not meet the requirements that water for home use will have to meet.)

FUTURE COMMUNITY GROWTH POTENTIAL:

This depends largely on future economic developments which may affect the town itself or the surrounding countryside. In a few instances these can be judged with reasonable accuracy,

but in most rural areas it is impossible to do so. It is necessary in estimating population growth to take into consideration such factors as the character and location of the town, the present status and possible expansion of agriculture on which it may depend, and the presence, or the possibility of establishment, of small industries in the surrounding area. It must be remembered, however, that most of these factors, especially industrial development, may produce sharp deviations from the estimated growth of rural populations. The availability of water may in itself be one of the biggest factors in the expansion of a town, particularly in the tropics.

An additional difficulty in population forecasting is that, in the great majority of cases, only vague information can be obtained as regards recent population and economic development in the area under study. Under such conditions no systematic estimate can be drawn up, and you must exercise considerable judgment in predicting future population.

FUTURE WATER REQUIREMENTS:

Although it is impossible to quote any specific studies which accurately describe growth patterns, it is essential that the well construction should include capacity for limited growth requirements. Too few wells for a population can have disastrous effects if the town develops much faster than anticipated. At the same time, over-building will require an exaggerated investment on the part of the present population.

In determining the maximum number of persons that can be served by one well, studies have indicated a wide variance. In Nigeria a figure of 500 persons per well was reported, while in Colombia 50 persons per well was estimated as the maximum figure. It would seem reasonable that in the majority of cases a well could provide water for a maximum population of 200 persons.

When calculating the maximum persons-per-well in your particular situation, usage will cause considerable variance. For example, in a village that depends largely on cattle-raising, the daily water requirements for one cow (drinking only) is approximately 15 gallons compared to 10 gallons for one person.

CONDUCTING A GEOLOGIC SURVEY

As either a part of the local water requirements survey, or separately, a survey of the local area is needed to identify all potential well locations. The skills and information needed to conduct this survey were discussed at some length in Section I-A: Occurence and Distribution of Ground Water. In addition to describing how and where ground water occurs, this survey will also pinpoint the exact locations where wells should be constructed, and the location of existing wells that might possibly be available as domestic water sources.

The purpose of the survey is to:

(1) locate all the possible sites for future wells;

(2) examine the geological profile of the area so that the proper well construction method will be used;

(3) discover the approximate depth that must be reached to locate ground water;

(4) identify all locations (houses, stores, schools, etc.) where water will be required, and all possible sources of contamination (septic tanks, sewage ditches, etc.).

In brief, you will be exploring to determine where a well can be constructed with successful results.

Before you begin the survey, locate all the maps that might exist for the area. These and any publications related to the geology and hydrology of the area can prevent many wasted hours redoing what has already been done.

Although there is no simple way of locating water, there is some water under the earth's surface almost everywhere. In nearly all humid areas, and in most arid areas as well, there is at least a little ground water in the rocks below the surface of the earth. The question is: How much? How free is it to come into a well? Can it come in fast enough to be useful?

Certain clues are helpful in locating ground water supplies. For instance, ground water is likely to occur in larger quantities under valleys than under hills. In arid regions, certain types of water-loving plants give the clue that there has to be ground water at a shallow depth underneath to feed them. Any area where water shows up at the surface--in springs, swamps, or lakes--has to have some ground water,

though not necessarily in large quantity, or of usable quality.

But, as was explained in Section I-A, the most valuable clues are the rocks. By determining the types of rocks in the area, the porosity and permeability of the sub-surface can be evaluated. A geologic definition of the area will reveal its general value as a ground water reservoir.

If any wells exist in the area, collect all the information possible about them--their location, depth, depth to water, amount of water pumped, and the kind of rocks they penetrate.

From the information gathered thus far, a contour map of the water table can be sketched. By making a cross-section map of the topographic map, and indicating all surface water levels, and existing well levels, you can determine the general shape of the water table in the same way that the topographic map shows the shape of the land surface. The water table map is especially important because it gives a clue not only to the depth below which ground water is stored, but also to the direction in which the water is moving.

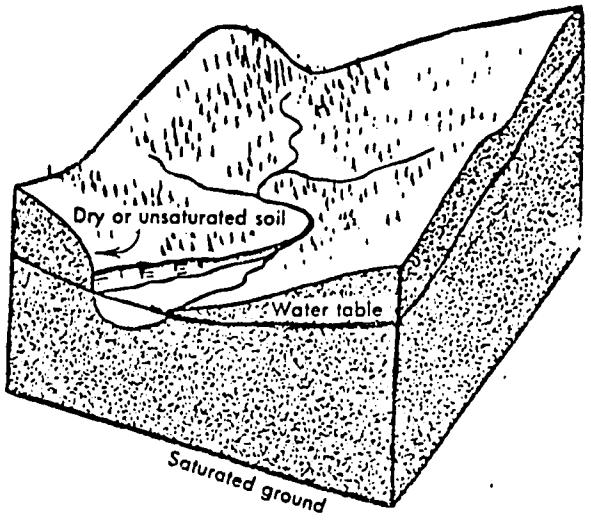

Figure 49 Example of water table map

Because quality is just as important as quantity, water samples should be collected and analyzed by a local health department, if one exists in the area. From these tests, the kind of water will be defined, and reveal further the chances of reaching acceptable water for domestic uses.

In conducting the geologic survey, collect all the clues available--rocks exposed to the earth's surface, quarries, tunnels and mines will reveal sub-surface rock formations; and data from existing wells. Take time to be as sure as possible that, once started, the well construction program will be successful.

DESIGN CRITERIA

The establishment of design criteria is important to prevent unnecessary labor and resources being expended on a construction program that will not provide water usable for drinking purposes. The objectives of any water-providing system are:

(1) To supply safe and wholesome water to the users, whether these constitute a family, a group of families, or a community;

(2) To supply water in adequate quantity;

(3) To make water readily available to the users, in order to encourage personal and household hygiene.

If these objectives are to be met, design criteria must be established for:

QUALITY
QUANTITY
LOCATION

WATER QUALITY

Quality of water is determined by the physical, chemical, and biological organisms contrived in the water. Once precipitation has reached the earth's surface, many opportunities are presented for the introduction of mineral and organic substances, bacteria and other forms of contamination. When surface water seeps downward into the soil and then through the underlying material to the water table, most of the particles held in suspension are filtered out so that the water recovered from wells and springs is generally clear. This natural process is ordinarily effective in removing bacteria and other particulate materials from the surface water as it passes through the soil to become ground water. However, certain soils and rocks contain soluble minerals and as a result ground water frequently contains more dissolved minerals than is usually found in surface water. These mineral or chemical substances are objectionable if dissolved in large quantities, and some are toxic or poisonous even in small amounts.

The physical qualities of water for human use pertain to its color and light transmission characteristics. Temperature also is a physical condition that affects the appeal of a water source.

Below is a list of physical, chemical, and biological factors of water significant to health.

Physical Factors

Turbidity:

The impact of raindrops on soil surfaces and the turbulence of streams place in suspension particles of sand, silt, and clay, which may remain in suspension and cause "turbidity." As a rule turbidities in excess of 5 units are usually discernible in a glass of water, while water with less than 1 unit turbidity is usually classed as excellent drinking water.

Color:

Dissolved organic matter, such as the tannins and lignins from decaying vegetation, may cause a characteristic brown color in some surface waters. Occasionally excessive blooms of algae or the growth of certain aquatic life may impart color to water. While color itself is not objectionable from the public health point of view, color in ground water often serves to indicate an association with objectionable surface waters.

Chemical Factors

Hardness

Compounds of calcium and magnesium, which may be found in soils or rock formations, may dissolve into percolating ground waters. If the concentration of these two elements in solution expressed in terms of calcium carbonate exceeds 150 parts per million, the water is said to be "hard." Such waters are known to destroy the cleaning action of soaps and form a scale in boilers.

Chlorides

Almost all natural water contains some chloride in solution resulting from leaching of marine sedimentary soils, contamination by sea water or brines, or pollution by domestic waste waters. Chloride concentrations in excess of 250 parts per million produce a noticeable taste in the drinking water. For domestic purposes, water should contain no more than 100 parts per million of chlorides.

Fluorides

Some water sources contain fluorides. Concentrations of about 1 part per million have been shown

to be beneficial in reduction of dental cavities in adolescent children. Fluorides in excess of approximately 2.5 parts per million may cause mottling of tooth enamel in some individuals.

Lead, Zinc, and Copper

These metals have been found in some natural waters where ore deposits have been developed. The corrosive action of some natural waters may cause the pick-up of small concentrations from piping made of, or coated with these metals. Limits: Copper--1.0 part per million, Lead--.05 part per million, Zinc--5.0 parts per million.

Arsenic and Selenium

In a few cases, small but highly toxic concentrations of arsenic or selenium have been found in natural waters. Drinking waters should not contain more than .05 parts per million of arsenic and .01 parts per million of selenium.

Nitrates

Nitrate nitrogen has been found to be the cause of methemo-globinemia (infant cyanosis or "blue baby disease") in infants who have been fed milk formulas prepared with high nitrate waters. Concentrations in excess of 45.0 parts per million as nitrate may be dangerous to infants. When the presence of nitrates is suspected, the advice of local health authorities should be requested.

Iron and Manganese

Many natural waters, particularly those which are highly acid, contain small amounts of iron and manganese. The oxides of these metals produce objectionable red (iron) and black (manganese) stains on enameled fixtures. In cases where iron concentrations are continuously excessive, a certain species of iron (Crenothrix) bacteria may develop in the distribution system producing "red water" and necessitating special treatment measures. It is generally recommended that the concentration of iron be less than .3 part per million and manganese .05 part per million.

Hydrogen Sulfide

The "rotten egg" odor which sometimes appears in water from drilled wells is the hydrogen sulfide gas formed by biochemical action within the water bearing formation. Mild concentrations of it can be sharply reduced by aeration or chlorination of the water.

Biological Factors

Water for drinking and culinary purposes must be free from pathogenic bacteria, protozoa, and other disease producing organisms. It should also be free from algae and aquatic micro-organisms, which can impart offensive odors or taste to the water and cause aesthetically objectionable color or turbidity.

Those organisms which may cause disease in man are foreign to natural water sources and usually originate with the fecal discharges of diseased individuals. It is seldom practical to completely monitor and control the activities of such disease carriers, but it is possible to exercise certain precautions against the possible contamination of an otherwise safe source or to institute treatment methods which will guarantee a safe water. Unfortunately, the actual agents of disease in any contaminated water are not easily identified. The available techniques for analysis are usually too complex and time consuming for routine use and so it has been necessary to develop tests which indicate the relative degree of contamination in terms of a more easily defined quantity.

The most widely used test involves estimation of the "most probable number" (MPN) of bacteria of the colidorm group, which are always present in sources of human fecal contamination and greatly outnumber disease producing organisms. These bacteria normally inhabit the intestinal tract of man, but may also be found in most domestic animals and birds, as well as certain wild species.

The State Department of Health and local health departments have adopted standards of bacteriological quality for domestic water supplies that limit the mean concentration of coliform bacteria in a series of water samples and the frequency at which

concentrations may exceed the mean. The recommended standards are roughly equivalent to restricting the coliform organism concentration to not more than 1 organism or bacterium for each 100 milliliters of water. One hundred milliliters is about 1/2 cup in volume. At this level of contamination by non-pathogenic coliforms, the risk of contracting disease by drinking the water is virtually zero.

Application of drinking water standards to individual water supplies is made difficult by limitations in the frequency with which the sample can be properly collected and analyzed. Bacteriological analysis show the presence or absence of contamination in the collected sample only and are only indicative of quality at the time of collection. A positive result is a good indication that the source may have been contaminated by ground surface washings or fecal material. On the other hand, a negative or satisfactory result cannot be considered assurance of a continuously safe supply, unless the results of a thorough sanitary survey of the surrounding area supports this position. The impracticability of frequently sampling an individual water supply gives special stress to the importance of safe location and sound construction so as to give assurance of a healthful supply once a satisfactory laboratory test is established.

Whenever available, you should rely on the public health department to collect samples, analyze and evaluate water that is to be used. If no health officials are available, and care is taken to build, seal, and disinfect the well as explained earlier, the ground water from the well should prove to be far superior to any sources available prior to the construction program.

WATER QUANTITY

The prime objective in initiating a well construction program will be to provide more water, more easily obtained. Although the quality of water will probably have the greatest long-range impact on the village, it will not be the prime factor to the local residents for some time after the project is completed. Therefore, careful calculation of the average daily water consumption, the maximum rate of demand, and the output of existing sources is most important. When the well construction program begins, know how much water you are looking for. Do not underestimate!

In the villages where such program will be implemented, water quantity estimates should be calculated for:

crop irrigation
stock watering
domestic water uses

Another important water consumption factor is the water that will be required during peak periods of demand. The rates of water consumption are generally greatest during mealtimes, during once-a-week occurrences (i.e. "wash day"). Ideally, the well should be able to satisfy the water requirements during these peak periods.

LOCATION

Locating a well has two important considerations: (1) the distance that water will have to be carried by the user, and (2) the distance from existing and potential sources of contamination. The maximum water-carrying distance should not exceed 300 feet. Every effort should be made to locate the well as close as possible to the user.

A safe distance between water source and the origins of contamination is dependent upon many local factors and its determination involves, among other things, an evaluation of:

(1) Character and location of sources of contamination;

(2) Permeability and structure of the water bearing formation;

(3) Type of well or spring and nature of construction;

(4) Natural slope of the water table;

(5) The influence of well pumpage on the depression of the water table at the well.

Where possible, the elevation of a ground water source should be above that of all surrounding sources of contamination. Furthermore, the property within a 50 foot radius of the water source should be owned by or controlled by the water source owner. (In the case of public water supplies a 100 foot radius of ownership or control is recommended.)

Because of property size limitations often occurring with individual water supply situations, it is frequently necessary to have water and contaminating sources closer to each other than is indicated above. In all circumstances, the type,

condition, and exact location of surrounding sources of contamination should be determined and the location of the water source established according to conditions and distances specified in the following table. Below are the recommended minimum distances between water supply sources and contamination sources when the soil porosity between sources is not greater than that of sand, free of gravel.

Source of Contamination	Distance to Well: Elev. same as water source	Distance to Well: Elev. higher than water source
Pit privy (max. pit depth--6 ft.)--	50 ft.	100 ft.
Sewer (tight bell & spigot joints)-	50 ft.	50 ft.
Septic tank (water tight concrete construction)----------	50 ft.	100 ft.
Subsurface sewage disposal trench (overflow from septic tank)---	100 ft.	200 ft.
Seepage pits (max. depth--8 ft.) (overflow from septic tank)---	100 ft.	250 ft.
Barnyards (no surface drainage closer than specified distance)----------	100 ft.	300 ft.
Cesspools (max depth--8 ft.)-------	150 ft.	300 ft.

Whenever the soil conditions and the distances for a shallow well do not fall within the limits recommended, every effort should be made to employ the consultative services of a local health official before using the water for domestic purposes.

III-A: Conducting A Preliminary Investigation

LESSON NO. 1

LESSON OBJECTIVE: Describe the Information that must be collected in a survey to establish the water needs of a rural or village area.

TOPIC	INSTRUCTIONAL PROCEDURE	SUPPLEMENTAL MATERIALS / RELATED READING
Define local Water Requirements	1) Describe the general steps to follow in determining the water requirements (needs) of a local area: total usage minus existing well yield equals water needs.	
	2) Guide trainees in the selection of data elements to be collected in a census survey of the local area.	
	3) Describe the use of a census-taking project as it could affect the relationship of the PCV to the local residents.	
	4) Discuss the various methods of collecting information, and general guidelines to follow when the census is initiated.	
	5) Identify the factors to be determined once the information has been collected.	
Geologic Survey	1) List the reasons why a geologic survey of the area is significant to a well-construction program.	
	2) In a field exercise demonstrate and have trainees practice the methods of geologic observation and recording.	Tape measures, compass, rock hammer, pencils, graph paper.
	3) Discuss additional "clues" that do not exist in the training area but that might be available in the assignment area.	
	4) Have each trainee draw a water table contour map of the training area.	

LESSON NO. 2

LESSON OBJECTIVE: Discuss the three areas for which design criteria must be established, the points in each area to be considered, and the minimum design specifications that should be established.

TOPIC	INSTRUCTIONAL PROCEDURE	SUPPLEMENTAL MATERIALS / RELATED READING
Objectives of any water-providing system	1) Discuss the need for establishing design guidelines, and the possible loss of labor and resources that might result if criteria are not established 2) List the three objectives of any water-providing system: a. To supply safe and wholesome water. b. To supply water in adequate quantities c. To make the water readily available 3) Define the three categories for which design guidelines must be established: a. QUALITY b. QUANTITY c. LOCATION	
Water Quality Guidelines	1) Explain that water quality is described by the <u>physical</u>, <u>chemical</u>, and <u>biological</u> organisms contained in the water. 2) List the types of organisms that are included in each category, their effect on humans, minimum allowable concentration, and how these minimum concentrations are achieved.	WHO Monograph #42
Water Quantity	1) Review the calculations that determine the quantity of water from a given source. 2) Discuss the various uses for which water consumptions must be calculated. 3) Have trainees practice calculations using sample figures provided by the instructor.	
Location	1) Identify the five factors that determine the proper location of a new well. 2) Establish minimum distances that must be between wells and potential sources of contamination.	

LESSON NO. 2 (page 2)

LESSON OBJECTIVE: Discuss the three areas for which design criteria must be established, the points in each area to be considered, and the minimum design specifications that should be established.

TOPIC	INSTRUCTIONAL PROCEDURE	SUPPLEMENTAL MATERIALS / RELATED READING
	3) For the wells constructed, have trainees locate all surrounding areas of contamination, measure distances to well, determine whether well meets all location criteria.	Tape measure

SECTION III-B

DESIGNING THE PROGRAM CONSTRUCTION PLAN

OVERVIEW:

Once the data has been collected, a plan outlining the proposed program needs to be completed. This plan will be the mechanism by which the PCV will obtain the necessary community support and financial backing to implement the program.

The plan should be complete, yet simple enough so that all local residents are aware of what the project is to which they are committing their labor, land, and money. Maps, sketches, and descriptions should be included, and the training should provide opportunities for these skills to be developed.

Before completing the program each PCT should have the opportunity to prepare an implementation plan. This plan, carried to the field, may prove to be an excellent guide when the actual task is initiated.

B. DESIGNING THE PROGRAM CONSTRUCTION PLAN

OBJECTIVE: Prepare a well-construction plan for the local village community, basing recommendations on survey data collected.

TASKS:

1. List all local requirements that must be satisfied: water needs, location of wells relative to users, cost limitations, right to land, etc.

2. Indicate on the survey map the location of each proposed well and probable yield.

3. For each well, indicate potential contamination sources and action required to insure protection of well from each source.

4. Indicate type of well, criteria for selection, and equipment requirements for each proposed well.

5. Schedule an implementation plan--which well will be constructed first, when, over what period of time, personnel assistance needed, OR,

5a. If requirements indicate that a well construction program is not feasible, prepare an analysis explaining why such a program is not advisable.

FUNCTIONAL SKILLS:

1. Be able to compare "requirements" factors with "potential water" factors, and determine whether a well construction program should be pursued.

2. Select well locations and explain geologic, economic, and social factors which support each selection.

3. Recall (list) most common sources of pollution found in rural areas, and methods generally used to eliminate such conditions.

4. Be able to select the type of well to be constructed, basing this selection on economic, geographic, and social considerations.

5. Identify personnel requirements of a construction program and be able to determine the ability of local residents to satisfy these requirements.

TERMINAL PERFORMANCE TESTS:

1. Given a written description of a rural community, be able to identify "water requirements" and "potential water" indicators, and determine the feasibility of a well construction program; select probable well locations and explain factors which support each selection; identify probable pollution sources and most appropriate methods to correct such conditions.

2. Using the test materials for #1 above, prepare an implementation plan covering: type of well to be constructed, period of time for the project to be completed; equipment, materials, and personnel requirements; estimated costs and sources of finance.

DESIGNING THE PROGRAM CONSTRUCTION PLAN

Once the survey of local requirements and geologic factors has been completed, the findings should be compiled as a well-construction plan for the local village or rural area. The following items should be included in the report:

(1) A listing of the local water requirements: water demands, present yields, existing needs; location of wells relative to users; cost limitations; rights to land.

(2) Location of each proposed well and probable yield.

(3) Potential contamination sources and proposed action required to insure protection of wells.

(4) Description of the type of well to be constructed, reasons for selection of that type, equipment and materials needed for construction.

(5) A schedule or implementation plan: start-complete dates for each well; personnel needed.

The local community must take an active role in the well construction program, and the program construction plan should serve as the basis for the coming work. The local government generally has jurisdiction over matters which affect the community and therefore, the plan should first be presented at this level. If you have carefully considered all the local factors, the plan should be possible within the framework of resources available to the local residents.

Many prominent citizens may not be members of the local administration; but, at the same time, they may bring even more influence to bear on the success of the proposed well construction program than the official administration. It is not uncommon to find that community leaders are outside the government. Such persons should be brought into the planning of the scheme. They need to understand and support the project and therefore must be approached with tact. Religious leaders in many communities are highly important and often cultured people who can appreciate the value of such a project and who may give vital support.

The people of the community must be given some understanding of the need for safe and wholesome water and of the part which the well project will play toward fulfilling that need. The enlistment of support from the local government and community leaders will help to attain this end. In general, health education techniques, applied at the earliest planning stages, will be of great value in marshalling public support for the rural program.

The various population components of the community (i.e. government leaders, community leaders, religious leaders, and the public), usually will not each back the project to the same extent; certain groups or individuals may be seeking personal advantage, but if the majority can be persuaded full community support will be the result.

FINANCING THE PROJECT

The stock reply to questions about financing is that the country, state, province, or community concerned is too poor to afford the cost of needed improvements. Upon investigation, however, it often turns out that public money is being spent for projects which are of much less importance and which cannot possibly give the same returns as those obtained when the same amount of funds is invested in the construction of public water-supplies. There is usually a way to obtain long-range financing for rural water programs if the individuals concerned with the problem will look far enough for a good case to present to their legislators or to financial institutions. Long-range plans have been effective in many countries throughout the world, both in the Western and Eastern Hemispheres. Most of them are the result of the work of a few people who have succeeded, after painstaking efforts, in convincing the right government or bank of the importance of sanitation work.

In almost all successful programs, federal or central governments have shouldered the responsibility for financing the construction of small rural water projects. In many cases this decision will have been made by the time you arrive. In many countries, the normal pattern is for the central government to loan the necessary funds directly to a local community at a low rate of interest or to make a partial grant, with the community, or community and state jointly, supplying the remainder. Loans or grants are made on the basis of projects presented through proper channels for approval by state or federal engineers. A sanitary engineering section in a central health department would be qualified and might be available to provide this technical service to rural communities.

In many financing plans the community is expected to contribute labor, land, local materials, and some services to the project, because these may be easily obtained locally and are often very reasonable in cost to the community. As a matter of fact, where the town or village is receiving a grant, it should at least be required to contribute those things that are available locally. Such a system offers an excellent opportunity to foster in the community a sense of ownership and pride in something which its members had to toil hard to achieve.

Co-operative projects are not always appreciated by government administrations, which often fail to understand their great advantages and significance from the standpoint of public relations and interest. It is true that such projects are slow of execution and that great patience and tact are demanded if they are to be carried through to successful conclusion. However, they are indispensable when large numbers of community water-supplies are to be construced in areas of poor economic possibilities. In some areas original cost estimates of new water-systems have been reduced by as much as 50% because the local people were able to furnish all the unskilled labor as well as services such as transportation, office space, warehouses, etc., plus all the local materials required.

Thus, by taking the initiative, you can successfully accomplish a great deal in the realm of providing improved water sources.

When estimating the cost of the project, you should carefully calculate costs for the following items:

MATERIALS
LABOR
TRANSPORTATION

As a general rule of thumb, labor should be about 25% of the cost of the project, materials about 70%, and transportation the remaining 5%. Although this will vary for particular situations, large variations from these guidelines should be carefully examined.

In countries where carefully planned well programs have been carried out, it has been determined that the total cost of the well can be recovered in 1-3 years by the reduction in cost of sickness and death from water-borne diseases and the actual money outlay to buy water from vendors. The capital savings for a ten year period can be as high as 800%. In addition to financial savings, pure water can reduce 75% of the sickness and death caused by water-borne diseases; at the same time, one well can increase the pure-water available many times over.

This information will be understood by local people and government administrators and should be used to promote necessary financing for rural well construction programs.

PERSONNEL SELECTION AND TRAINING

The well construction program should be conducted as an exercise in self-help; the bulk of the work being completed by local personnel. By the end of the program you should strive to have enough people trained so that future wells can be constructed without the presence of technical PCV.

When work crews are selected, choose a local person to act as foreman. You should direct your advice through the foremen, and assist them in both learning and teaching the skills involved in building a well.

To make training as simple and effective as possible, remember the following points:

(1) Teach skills, not knowledge. These men must be taught on a concrete level of understanding, not an abstract one. Concentrate on How To perform a task and not on Why it should be performed.

(2) As has been the case in your training program, demonstrate, then supervise as they attempt to copy the steps you followed.

(3) Reduce each skill to simple, easy-to-learn steps. Teach one step at a time, slowly and patiently.

Careful, patient, and well-planned preparation can result in a highly motivated crew, determined to complete a job successfully. The outcomes of such training as part of the program should easily be transferred to other community improvement projects once the village has acquired a satisfactory supply of water.

LESSON NO. 1

LESSON OBJECTIVE: Prepare an outline of a proposed well construction program, illustrating an understanding of all factors significant to such a proposal.

TOPIC	INSTRUCTIONAL PROCEDURE	SUPPLEMENTAL MATERIALS / RELATED READING
Over-all content of the report	1) Discuss the purposes that the report will serve.	
	2) Have trainees list all factors they think should be part of the reports.	
	3) Add to the list any topics that were overlooked, explaining why these additions are also important.	Section III-B, this manual
	4) Organize the list into an acceptable table of contents form.	
	5) Using material collected earlier in the training program, have trainees prepare a sample well-construction proposal.	
Presentation	1) Describe the various typical groups in a village society who should be consulted regarding a well construction proposal.	
	2) Have each trainee present his proposal to a small group; the small group should be prepared to ask the type of questions, exhibit the typical apprehensions, and express the type of doubts that a PCV will face in an actual situation.	

III-B: Designing the Program Construction Plan

LESSON NO. 2

LESSON OBJECTIVE: Discuss the various considerations relative to the financing of a well-construction program.

TOPIC	INSTRUCTIONAL PROCEDURE	SUPPLEMENTAL MATERIALS / RELATED READING
Typical Problems	1) Describe the typical types of problems usually facing efforts to raise the needed funds to implement the project. 2) Identify the normal organizational levels that should be considered as potential sources of funds for a well construction program.	
Methods of Financing	1) Describe the three major ways in which funds are usually secured for such projects: a. Grants b. Co-operatives c. Loans 2) Discuss the methods by which each of the above is administered, pointing out the pros and cons of each method.	
Distributing the Project Costs	1) Have students list the types of costs that have to be factored into an estimate of the project's cost. 2) Explain that, generally, these items can be grouped into three general categories: MATERIALS LABOR TRANSPORTATION 3) Describe how the total costs of such a project can generally be distributed for purposes of estimating whether the plan is fairly typical: Materials (70%), Labor (25%), Transportation (5%). 4) Give trainees a number of figures; have each categorize the items, and determine the total cost, and cost-distribution of the project.	

III-B: Designing the Program Construction Plan

LESSON NO. 3

LESSON OBJECTIVE: Describe the Methods of Teaching Local Villagers the Skills needed to Build and Maintain Individual Water Well Systems.

TOPIC	INSTRUCTIONAL PROCEDURE	SUPPLEMENTAL MATERIALS / RELATED READING
Methods of instruction	1) List the points around which any PCV training program should be built: a. Teaching skills b. Demonstration - Practice c. Simplicity 2) Select from this program manual one skill for each trainee. 3) Have each trainee "teach" this skill to three or four others. 4) Have the "students" evaluate the "instructor's" performance at the end of each instructional period.	
Purposes of Community Involvement	1) Discuss the importance of teaching local people technical skills. 2) Emphasize the value of changing attitudes that occur because of self-help programs.	

BIBLIOGRAPHY

A Primer on Ground Water, U.S. Department of the Interior (Geological Survey), Washington (U.S. Government Printing Office), 1963

A Pump Designed for Village Use, Abbott, Edwin; Philadelphia (American Friends Service Committee), 1955.

Bihar and Madhya Pradesh Tubewell Program, PC Training Program, Scio, Oregon, Development and Resources Corporation, 1968

Construction of Large Diameter Concrete Cased Wells, Selle, Leon O.; Garland, Robert; Maradi, Niger, 1965

Farm Pond Water Supply, Ohio Department of Health, 1959

Ground Water Hydrology, Todd, David K., New York (John Wiley & Sons), 1959

Ground Water Supply, Engineering Extension Service, Texas A. and M. College System

Home Waterworks (A Manual of Water Supply in Country Homes), Lynde, Carleton J., New York (Sturgis & Walton Company), 1911

How to Find a Large Low-Cost Water Supply on a Suburban Lot or Rural Land, Technical Bulletin #101, Opelike, Alabama (Deeprock Drilling Company)

Irrigation Wells and Well-Drilling Methods in California, Circular 361, Johnston, C.N., University of California, College of Agriculture, 1945

Know Your Watersheds, Leaflet No. 202, U.S.Department of Agriculture, Forest Services, 1963

Logging of Sedimentary Rocks, Development and Resources Corporation, (Unpublished)

Manual Of Individual Water Supply Systems, U.S.Department of Health, Education and Welfare, 1963

Manual of Well Construction and Pump Installation, Wisconsin State Board of Health, Madison, Wisconsin, 1953

Modern Well Equipment for Shallow Wells, Modern Agriculture Company, Washington, 1966

Planning and Developing Water Supply Programs in Developing Countries, International Conference on Water for Peace, Washington, 1967

Principles and Practical Methods of Developing Water Wells, Bulletin No. 1033, St. Paul (40P - Johnson Division), 1959

Rural Water Supply, New York State Department of Health, 1966

Rural Water Supply and Sewerage, Part II, Steel, E.W. and P.J., Alwin Zeller; College Station (Texas Engineering Experiment Station), 1940

Safe Water, Bulletin ES No. 4, Olympia, Washington

Shallow Well Hand Pumps, TIS 334, Washington (Internation Cooperation Administration), 1958

Small Water Supplies, Bulletin No. 10, London (The Ross Institute), 1967

The Hydrologic Cycle, Michael, Jerrold M., Atlanta (U.S. Department of Health, Education, and Welfare; Environmental Health Training Section,)1959

"Three Simple Pumps", Field, Make, Peace Corps TECH NOTES, Vol 1, No. 2, April 1968

Water Pumping Systems for the Farm, Rural Electrification Bulletin 6, Manhattan, Kansas (Kansas State College).

"Water", Reprint from Power, Reader Service Department, 330 W. 42nd St., N.Y., N.Y. 10036, 1966

Water Supply and Sanitation in Developing Countries, Monograph Series, University of North Carolina (International Program in Sanitary Engineering Design) Department of State, AID:

Series Item No. 3: "Water Supply Using Bamboo Pipe", October 1966

Series Item No. 6: "Individual Household Disinfection and Filter Unit for Turbid Waters", October 1966

Series Item No. 11:"Characteristics of the Unknown Pump", October 1966

Series Item No. 15:"Jetting Small Tubewells by Hand", June 1967

Series Item No. 16:"Temporary Chlorination of Small Water Supplies" July 1967

Series Item No. 17:"An Inexpensive, Truck-Mounted, Jetting-Driving, Well-Drilling Rig", August 1967

Water Supply for Rural Areas and Small Communities, Wagner, E.G.; Lanois, J.N.; Geneva (World Health Organization), 1959

"Water Well Drilling Methods", (Seven Papers from 1957 National Water Well Exposition), Water Well Journal, Urbana, Illinois, 1958

Water Well Handbook; Anderson, Keith E.; Rolla, Missouri (The Missouri Water Well Drillers Association), 1966