11025

V. I. T. A.

DESIGN GUIDE for LIGHT AIRCRAFT AIRPORT

EDITOR
HERMAN S. D. YANG

VOLUNTEERS FOR INTERNATIONAL TECHNICAL ASSISTANCE
LOCKHEED-GEORGIA VITA CHAPTER
LOCKHEED-GEORGIA CO, MARIETTA, GA, 30060
U. S. A.

PREFACE

The objective of this Design Guide is to provide the basic and necessary information for planning and constructing an airstrip or airport for light aircraft. The term "light aircraft" is used primarily to refer to current propeller airplanes weighing 12,500 pounds (5670 kg) or less when fully loaded. Rotary wing aircraft such as helicopters in the same gross weight range are also included. The air space and ground area requirements for the operation of a helicopter, however, are always much less than those for fixed wing airplanes of the same gross weight, and since an airport which is designed for fixed wing airplanes can certainly accommodate helicopters of the same weight category, this Design Guide, therefore, is addressed to the criteria for light airplanes.

Within the United States, the Federal Aviation Administration (FAA) of the Department of Transportation establishes regulations and rules for airport requirements and aircraft certification. Engineering and design information on airports such as listed in the reference and bibliography of this Guide have been compiled by the FAA and are available from the Department of Transportation, Distribution Unit, TAD844.3, Washington, D.C. 20590. For areas outside the United States, regulations and rules concerning airport requirements and aircraft operation may vary, but the essential technical data for designing and building a light aircraft airport are applicable.

No construction equipment or methods are specified in this Design Guide for the reason that they differ widely from one area to another, varying from the most sophisticated earth moving and paving machinery to mere hand implements such as shovels and rakes. The time and effort to construct the airstrip or airport, of course, will depend upon the size of the job and the equipment selected to do the job.

This Design Guide is prepared as a project of the VITA chapter at the Lockheed-Georgia Company, Marietta, Georgia 30060, U.S.A. It is available on request at this address or through the VITA Headquarters at the following address:

Volunteers for International Technical Assistance
College Campus
Schenectady, New York 12308

This is the first attempt in providing a Design Guide of this nature. The material selected for inclusion is brief and general. For more detail information on specific subjects, refer to the publications listed in the bibliography. If additional information is needed to solve particular problems arising from local conditions, contact VITA Headquarters for referral. Comments and constructive criticism regarding this Design Guide from a user's point of view are sincerely solicited.

ACKNOWLEDGEMENT

The project of preparing a handbook for building airstrips in remote areas for "Bush Pilots" was initiated in the VITA chapter at Lockheed-Georgia Company. The idea was supported by many members of the VITA chapter; and several planning sessions were held covering a period of two years. The collected material was finally compiled into the present form of a Design Guide for Light Aircraft Airport. Throughout the whole period, Bob Duggan, a charter member of Lockheed-Georgia VITA, was the prime mover of this project. Many Lockheed-Georgia VITA chapter members contributed effort in this undertaking including particularly Phil Spindell who collected some of the reference material and reviewed the draft, Joe Cornish and Bruce Mylrea who commented on the draft, and Stan Logan who advised on matters for publication. The editor wishes to express his sincere thanks to Mrs. Carl (Betty) Logan who did the clerical and typing work.

H.S.D. Yang
Editor

CONTENTS

		PAGE
	PREFACE	i
	ACKNOWLEDGEMENT	ii
	FIGURE INDEX	iv
	TABLES	v
1.	PLANNING CONSIDERATIONS	1
2.	DESIGN	3
3.	SITE SELECTION AND CONSTRUCTION	18
4.	MARKING AND LIGHTING	28
5.	FACILITIES	35
	REFERENCES AND BIBLIOGRAPHIES	40
	APPENDIX	41

FIGURE INDEX

	TITLE	PAGE
1.	Typical Layout of a Utility Airport	9
2.	Runway Surfaces	10
3.	Dimensions of Airport Surfaces	11
4.	Recommended Runway Lengths for Different Airplane Groups	12
5.	Airspace Clearance	17
6.	Penetrometer for Testing Soil Strength	22
7.	Degrees of Surface Roughness	24
8.	Edge and Hangar Markers	28
9.	Segmented Circle Marker and Wind Cone	31
10.	Runway and Taxiway Edge Lighting System and Runway End Identifier Light	33
11.	Typical Layout for Parking and Tie Down Provisions	36
12.	Typical Layout of an Administration Building	38
13.	Location of Buildings	39

TABLES

	TITLE	PAGE
1.	Groups of Light Aircraft	4
2.	Dimensions for Airport Layout	13
3.	Estimate of Rainwater Runoff	19
4.	Maximum Flow Velocity in Open Ditch	20
5.	Soil Strength Requirements for Unpaved Runways	23

1. PLANNING CONSIDERATIONS

1.1 INTRODUCTION

The purpose of planning is to achieve the goal with minimum available expenditure and effort. One adherent benefit of planning is that the goal becomes more clearly defined as the planning is being formulated. Good planning is necessary for efficient execution of the task.

Planning for building a small airport goes beyond the designing of the airport. No detailed planning can be done, however, unless a design of the airport or airstrip has been established. The following factors are the general planning considerations in designing and constructing a small airstrip. A typical check list covering the data required for designing and planning is included in the appendix.

1.2 FACTORS

a. Size - The types of airplanes to be accommodated and the expected air traffic volume at present and in the future should be estimated.

b. Location - Good ground access to the airport is essential for its usefulness. Ground transportation to the field both during the construction stage and after its completion should be planned.

c. Runway Direction - The prevailing wind direction during the hours of operation determines the orientation of the runway or runways.

d. Airspace Clearance - Removal of obstacles and maintaining vertical clearance around the airport is necessary for safe operation.

e. Construction - Land preparation in grading, drainage provision, and runway construction constitutes the major amount of effort needed to build the airport. Construction includes markings and also lighting provisions if night operations are contemplated.

f. Facilities - Planning should include the facilities for maintaining and servicing the airplanes, such as power and water supplies, sewage system, fuel and oil storage, parking, and tie-down provisions. Hangars and buildings are needed for the operation as an airport.

g. Security and Safety - Security of material and equipment during construction should not be overlooked in the planning. Security of the operational equipment, including the airplanes which are based at the airport, may require special provisions such as fences. Safety of personnel in construction and operation of the airport requires also detailed consideration.

h. Growth Potentials - An airport is a catalyst for growth of local development. Planning should not overlook the potential of increased air traffic volume accommodating larger airplanes and more sophisticated facilities, such as instrument approach installations.

2. DESIGN

2.1 AIRPLANE GROUPS

For the purpose of determining the runway size, the light airplanes having a gross weight less than 12,500 pounds (5670 kg) are tabulated into four groups. Table 1 shows the airplane types in each group. An airport that accommodates the airplanes in the higher numbered group can, of course, accommodate all the airplanes in the lower numbered group(s).

2.2 RUNWAY LENGTH AND DIMENSIONAL STANDARDS

Figure 1 shows a typical layout of a small utility airport. Figure 2 shows the plan and profile of the runway, and Figure 3 gives more detail of the surfaces with an additional taxiway parallel to the runway. The lengths of the runway required to accommodate the airplanes of the four groups listed in Table 1 can be determined from Figure 4, taking into consideration the elevation from sea level (S.L.) and the temperature at the location during operation hours in the hottest month of the year. Table 2 gives the acceptable ranges of the dimensions in layout of the airport surfaces.

2.3 WIND ANALYSIS AND RUNWAY ORIENTATION

Wind direction has a pronounced effect on small aircraft in takeoff and landing operation. Crosswind components are often a contributing factor in small aircraft accidents. Crosswind component is the equivalent wind at 90° to the runway direction, and it is equal to the wind speed multiplied by the trigonometric sine of the angle between the wind and runway directions. It is important to have an accurate wind analysis at the location to determine the runway direction for maximum wind coverage. Wind coverage is the percentage of time which is considered safe for aircraft operations insofar as the crosswind component is concerned. The desirable wind coverage is 95% based on the weather observations for the hours of the day when aircraft are in operation. Considering the combination of other factors, FAA has selected a crosswind component of 12 mph (10.5 knots) as an acceptable and convenient figure in determining runway orientation.

It is desirable to have a 10-year wind record summary on which the runway orientation will be based. Three years wind record by hourly observation is considered minimum by FAA standard. There are many localities, however, where no weather observation data or wind record is available. In this case, effort should be made to observe and record the wind direction and velocity for at least one year. Appendix 3 of Reference 1, Utility Airports describes the procedures for obtaining wind data and the example of using a "wind rose" in determining runway orientation.

TABLE 1

LIGHT AIRCRAFT - GROUP I

AIRCRAFT			SIZE, FT.			WEIGHT, LB.		TYPE
MANUFACTURER	MODEL	POPULAR NAME	SPAN	LENG.	HT	GROSS	EMPTY	
USA								
N. Amer-Rock	Thrush	Commander	44.6	28.3	9.1	6,000		Agric.
N. Amer-Rock	Sparrow	Commander	35.0	24.0	8.0	3,300		Agric.
N. Amer-Rock	Quail	Commander	35.0	24.0	8.0	3,600		Agric.
N. Amer-Rock	Darter	Commander	35.0	22.0	9.2	2,250	1,280	4-seater
N. Amer-Rock	Lark	Commander	35.0	22.5	10.5	2,450	1,450	4-seater
Internat'l	260B	Bellanca	34.1	22.8	6.2	3,000	1,935	4-seater
Maule	M-4C	Jelasen	29.5	22.0	6.0	2,100	1,100	4-seater
Maule	M-4-210C	Rocket	29.5	22.0	6.0	2,300	1,190	4-seater
Champion	7ECA	Citabria	33.3	23.5	6.7	1,650	950	2-seater
Piper	PA-18-150	Super Cub	35.3	21.5	6.6	1,750	930	2-seater
Grumman	G-164A		35.9	22.3	10.8	4,500		Agric.
ARGENTINA								
D.I.N.F.I.A.	IA-46	Ranguel	38.1	24.2	6.6	2,116	1,389	Agric. & Utility
D.I.N.F.I.A.	IA-51	Tehuelche	38.0	26.9	10.8	3,355	1,857	Agric. & Utility
AUSTRIA								
J. Oberler	JOB15-150	Falke	33.1	25.2	6.5	2,130	1,327	4-seater
BRAZIL								
S.C.A.N. Ltd	P-56-D	Paulistinha	35.3	22.0	8.2	1,300	880	2-seater
CZECH								
O.F.T. Corp.	Z-37	Cmelak	40.1	27.8	9.5	4,000	2,100	Agric.
FRANCE								
Avions C.P.	CP-320	Emeraude	26.4	21.5	7.9	1,540	950	2-seater
Avions C.P.	CP-605	Diamant	31.8	22.6	7.9	1,870	1,035	4-seater
Avions C.P.	CP-705	Beryl	26.3	22.6	8.6	1,500	925	2-seater
INDIA								
Socata	MS880B	Rallye	31.5	22.4	8.9	1,700	1,000	4-seater
Hindustan	H-UL-26	Pushpak	36.0	21.0	9.1	1,350	900	2-seater
ITALY								
Meteor	B15	Meteor	32.1	22.2	6.1	1.653	992	2-seater

TABLE 1 (Continued)

LIGHT AIRCRAFT - GROUP II

AIRCRAFT			SIZE, FT.			WEIGHT, LB.		TYPE
MANUFACTURER	MODEL	POPULAR NAME	SPAN	LENG.	HT.	GROSS	EMPTY	
USA								
Piper	PA-28B-235	Cherokee	32.0	23.5	7.0	2,900	1,410	4-seater
Piper	PA-32-260B	Cherokee	32.7	27.6	7.8	3,400	1.640	6-seater
Piper	PA-25-235	Pawnee C	36.2	24.7	7.2	2,900		Agric.
Cessna	150	Commuter	32.6	23.7	8.7	1,600	975	2-seater
Cessna	180	Skywagon	36.1	25.4	7.7	2,800	1,535	6-seater
Cessna	185	Skywagon	36.1	25.4	7.7	3,350	1,575	6-seater
Cessna	210	Centurion	36.7	28.1	9.7	3,400	1,960	6-seater
Cessna	AGN A	Agwagon	40.4	25.5	7.6	3,300		Agric.
Beech		Musketeer	32.7	25.0	8.1	2,550	1,410	6-seater
Beech	E33	Bonanza	32.8	25.4	8.1	3,050	1,862	5-seater
Beech	V35	Bonanza	33.4	26.3	6.4	3,400	1,958	6-seater
Beech	B55	Baron	37.7	27.1	9.5	5,100	3,075	6-seater
N. Amer-Rock	Skrike	Commander	49.1	35.1	14.4	6,750	4,520	8-seater
Champion	76CA-A	Citabria	33.3	23.5	6.7	1,650	1,050	2-seater
Lake Aircraft	LA-4	Amphibian	38.0	24.7	9.2	2,400	1,555	4-seater
Mooney	M10	Cadet	30.0	20.7	7.7	1,450	950	2-seater
Mooney	M20C	Ranger	35.0	23.1	8.3	2,575	1,525	4-seater
Ted Smith	600 series	Aerostar	34.2	35.7	12.3	6,000	3,800	6-seater
WACO	S220 ser.	Sirius	35.5	26.1	9.4	2,976	1,650	4-seater
WACO	TS250	Taurus	35.5	26.1	9.4	2,976	1,650	5-seater
ARGENTINA								
D.I.N.F.I.A.	IA-51	Tehuelche	38.0	25.2	7.0	2,700	1,500	3-seater
GREAT BRITAIN								
Beagle	D-5	Husky	36.0	22.2	8.2	2,400	1,420	

TABLE 1 (Continued)

LIGHT AIRCRAFT - GROUP II (Continued)

AIRCRAFT			SIZE, FT.			WEIGHT, LB.		TYPE
MANUFACTURER	MODEL	POPULAR NAME	SPAN	LENG.	HT.	GROSS	EMPTY	
FRANCE								
Avions, C.P.	CP.605	Diamont	31.8	22.6	7.9	1,870	1,035	2-seater
Centre	DR221	Dauphin	28.8	22.5		1,720	1,040	2-seater
INDIA								
Hindustan	H-AOP-27	Pushpak	37.5	19.8	10.8	2,800	1,970	4-seater
INDONESIA								
National		Gelatik	36.6	27.1	8.7	2,535	1,563	4-seater

TABLE 1 (Continued)

LIGHT AIRCRAFT - GROUP III

AIRCRAFT			SIZE, FT.			WEIGHT, LB.		TYPE
MANUFACTURER	MODEL	POPULAR NAME	SPAN	LENG.	HT.	GROSS	EMPTY	
USA								
N. Amer-Rock	Courser	Commander	49.0	41.5	14.5	8,500	5,449	11-seater
Beech	V35A	Bonanza	33.5	26.3	6.5	3,600	1,980	6-seater
Beech	B55	Baron	37.7	27.1	9.5	5,100	3,075	6-seater
Beech	A65	Queen Air	45.7	35.5	14.1	7.700	4,960	11-seater
Cessna		Cardinal	35.5	26.7	9.1	2,350	1,415	4-seater
Cessna		Skyhawk	36.1	26.7	8.7	2,300	1,315	4-seater
Cessna	Super	Skylane	36.5	28.2	9.7	3,600	1,835	6-seater
Mooney	M20C	Ranger	35.0	23.2	8.3	2,575	1,525	2-seater
Piper	PA-28-180	Cherokee D	30.0	23.3	7.3	2,400	1,300	4-seater
Piper	PA-28-200	Arrow	30.0	24.2	8.0	2,600	1,459	4-seater
Piper	PA-24B-260	Commanche	36.0	26.0	7.5	3,100	1,728	6-seater
Piper	PA-23-250	Aztec D	37.1	30.1	10.2	5,200	2,933	6-seater
CZECH								
Omnipol	Zlin 43		32.2	25.6	8.7	2,760	1,455	4-seater
FRANCE								
Centre	DR253	Regent	28.8	23.7	6.6	2,426	1,325	4-seater
GREAT BRITAIN								
Beagle	B-121	Pup-150	31.0	23.1	8.3	1,900	1,100	4-seater
ITALY								
Macchi	AL-60F5		39.3	28.9	10.5	4,500	2,300	6-seater
Laverda	F-8-L-4	Falco	26.1	21.3	7.1	1,808	1,212	2-seater
Meteor		Meteor Super	32.1	22.2	6.1	1,984	1,120	4-seater
Partenavia	P-66B	Oscar 150	32.7	23.3	8.5	2,048	1,341	3-seater
Marchetti	SA-202	Bravo	30.5	23.6	8.3	1,875	1,130	3-seater
SPAIN								
AISA	S-205-18F		35.6	26.2	9.5	2,645	1,565	4-seater

TABLE 1 (Continued)

LIGHT AIRCRAFT - GROUP IV

AIRCRAFT			SIZE, FT.			WEIGHT, LB.		TYPE
MANUFACTURER	MODEL	POPULAR NAME	SPAN	LENG.	HT.	GROSS	EMPTY	
USA								
Beech		Turbo Baron	37.7	29.0	9.2	5,990	3,650	6-seater
Beech	B80	Queen Air	50.2	35.4	14.2	8,200	4,995	11-seater
Beech	H18	Super	49.5	35.2	9.2	9,900	5,845	11-seater
Cessna	401A		39.8	38.7	11.5	6,300	3,669	8-seater
Cessna	421		39.8	33.7	11.5	6,800	4,252	7-seater
Mooney	Mark 22	Mustang	35.0	27.0	9.8	3,680	2,440	5-seater
Piper	PA-31	Turbo Navajo	40.5	32.5	13.0	6,500	3,759	8-seater
Piper	PA-35	Pocono	51.0	39.2	15.7	9,500	4,900	20-seater
GREAT BRITAIN								
B-N Ltd	BN-2A	Islander	49.0	35.7	13.7	5,995	3,500	10-seater
Hawker-Sid	DH-104	Dove 8	57.0	39.2	13.3	8,950	6.220	8-seater
INDIA								
Hindustan	H-LAS-28		53.5	36.0	13.8	8,000	5,000	10-seater
ITALY								
Rinaldo	P-166B		46.9	39.0	16.5	8,377	5,556	10-seater
Marchetti	S205/20F		35.6	26.2	9.5	2,866	1,630	4-seater
SWITZERLAND								
Pilatus	PC-6/340	Porter	49.7	33.3	10.4	4,850	2,420	10-seater

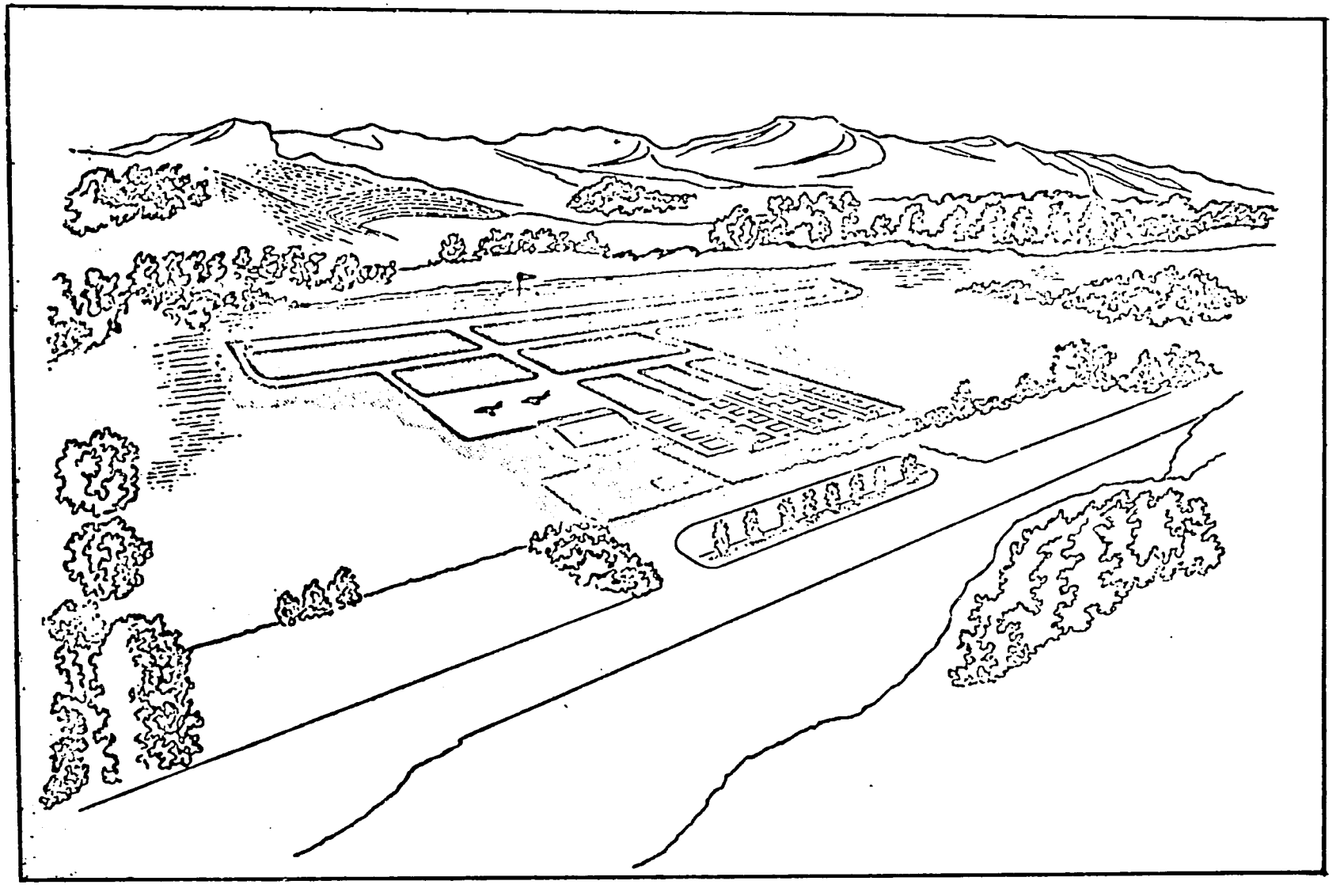

FIGURE 1 TYPICAL LAYOUT OF A UTILITY AIRPORT

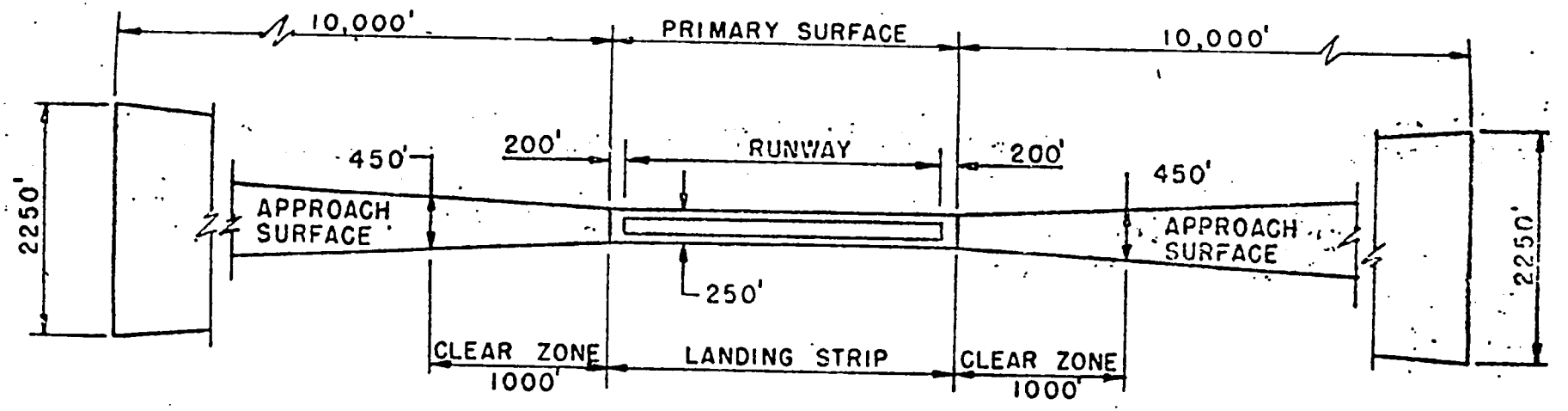

PLAN

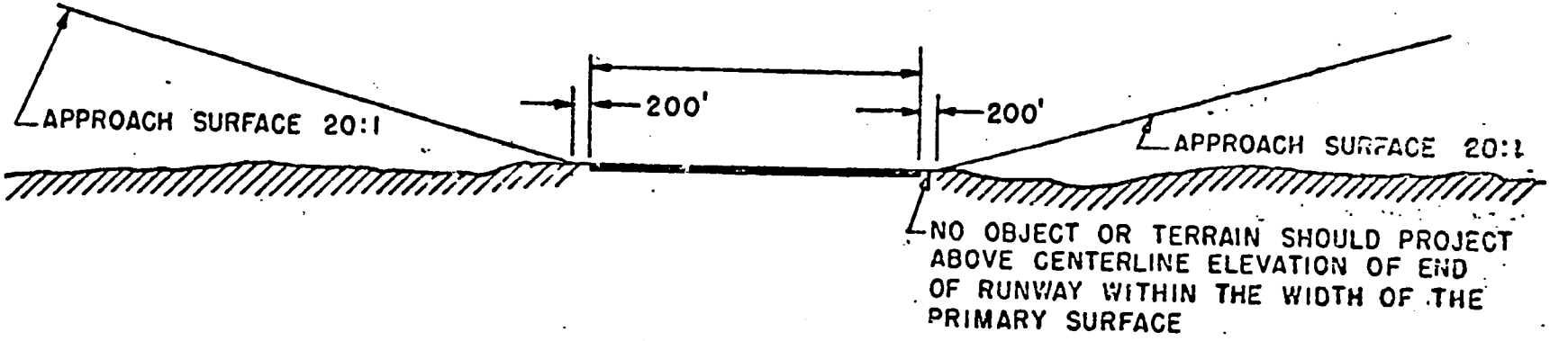

PROFILE

FIGURE 2 RUNWAY SURFACES

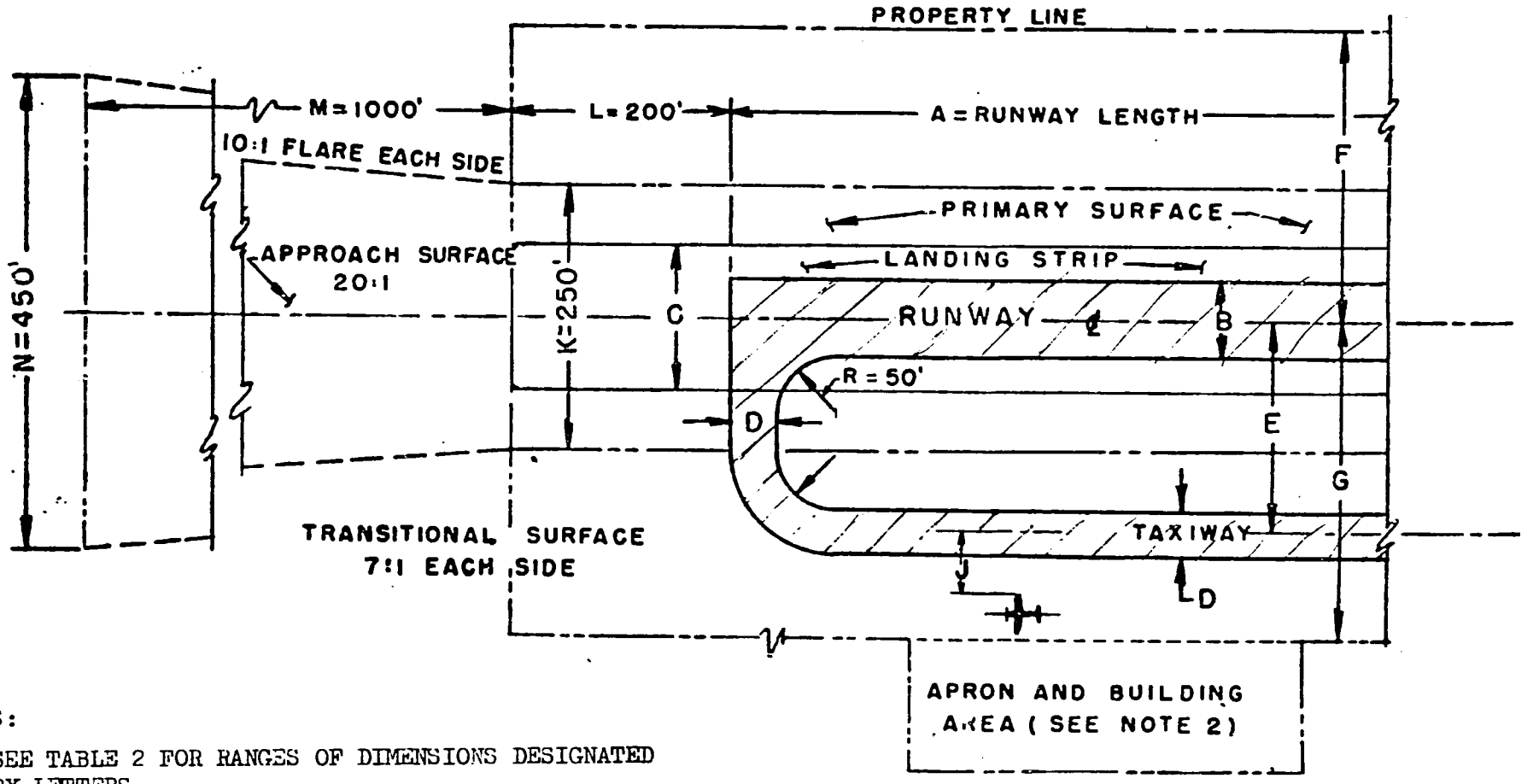

NOTES:

1. SEE TABLE 2 FOR RANGES OF DIMENSIONS DESIGNATED BY LETTERS.
2. PREFERRED LOCATION FOR BUILDING AND AIRPLANE PARKING AREA IS NEAR MIDPOINT OF RUNWAY. THE SIZE AND SHAPE ARE VARIABLE AS REQUIRED.

FIGURE 3 DIMENSIONS OF AIRPORT SURFACES

NOTE:

1. CHECK AIRPLANE MANUAL PERFORMANCE DATA FOR THE LONGEST FIELD LENGTH REQUIREMENT IN THE SPECIFIC GROUP.
2. DETERMINE RUNWAY LENGTH WITH RESPECT TO ALTITUDE OF THE LOCATION AND THE NORMAL MAXIMUM TEMPERATURE OF THE HOTTEST MONTH OF YEAR.

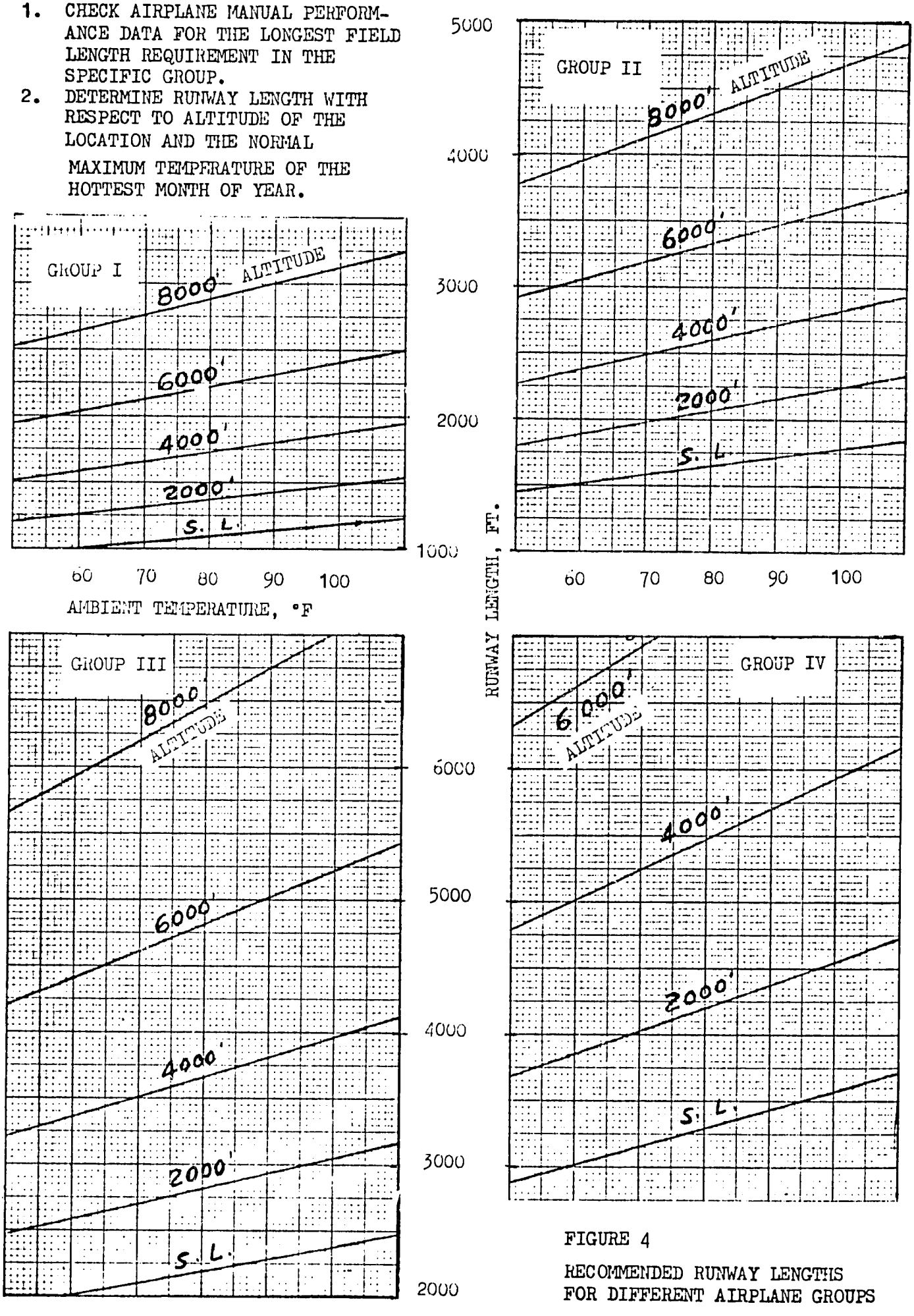

FIGURE 4

RECOMMENDED RUNWAY LENGTHS FOR DIFFERENT AIRPLANE GROUPS

TABLE 2

DIMENSIONS FOR AIRPORT LAYOUT

(Refer to Figure 3 for the definition of items)

Items	Acceptable Range of Design			
	Minimum		Maximum	
1. Runway Length - A (a)	Feet	Meters	Airplane manual performance data for the critical aircraft in the specific group.	
Group I	1,000	305		
II	1,500	458		
III	2,000	610		
IV	3,000	915		
2. Runway Width - B			Feet	Meters
Group I	40	12.5	60	18.5
II	50	15.5	75	23.0
III	60	18.5	75	23.0
IV	75	23.0	100	30.5
3. Landing Strip Width - C				
Group I	80	24.5	100	30.5
II	100	30.5	150	46.0
III	120	36.5	150	46.0
IV	150	46.0	200	61.0
4. Taxiway Width - D				
Group I	15	4.6	30	9.2
II	20	6.1	40	12.2
III	30	9.2	40	12.2
IV	30	9.2	40	12.2
5. Runway centerline to taxiway centerline - E All Groups	150	46.0	200	61.0
6. Runway centerline to property line (Non-taxiway side) - F (b) All Groups	200	61.0	350	107.0
7. Runway centerline to property line (Taxiway side) - G All Groups (b)	250	76.5	350	107.0
8. Taxiway centerline to aircraft tiedown area - J All Groups	75	23.0	Not applicable	

TABLE 2 (Continued)

Items	Acceptable Range of Design			
	Minimum		Maximum	
	Feet	Meters	Feet	Meters
9. Landing strip overrun length - L All Groups	100	30.5	200	61.0
10. Radius of fillet pavement - R	50	15.8	100	30.5
11. Runway centerline to building restriction line (c)				
Group I	200	61.0	300	91.5
II	250	76.5	350	107.0
III	250	76.5	350	107.0
IV	300	91.5	350	107.0
12. Taxiway centerline to obstruction All Groups	50	15.8	Not applicable	
13. Runway and taxiway longitudinal slope	Zero percent		3 percent	
14. Runway and taxiway transverse slope	1.0 percent		3 percent	
15 Runway shoulder transverse slope	3.0% for first 10 feet, (3.5 M) then 1.5% to edge of landing strip.		5% for first 10 feet (3.5 M) then 3% to edge of landing st strip.	
16. Taxiway should transverse slope (d)	3% for first 10 feet (3.5 M)		5% for first 10 feet (3.5 M)	
17. Rate of change of longitudinal grade for runway (e)	Zero percent		2% per 100 feet (3.5M) of vertical curve	
18. Slight distance for runway	Any two points 5 feet above runway must be mutually visible for one-half runway length		Runway end to runway end	

TABLE 2 (Continued)

Items	Acceptable Range of Design	
	Minimum	Maximum
19. Apron slope longitudinal or transverse (parking and holding aprons)	1.0 percent	3.0 percent

(a) Runway lengths are for sites at an altitude up to 500 feet (150 meters) above sea level and the hottest air temperature for operation is not higher than 70°F (21°C). For higher altitudes and temperatures, see Figure 4.

(b) Due to the configuration of existing property boundaries and the practicalities of land acquisition, it may not be feasible to obtain either the minimum or maximum clearances.

(c) Maximum clearance will vary with the apron configuration.

(d) Beyond 10 feet, engineering design for grading and drainage will dictate.

(e) Does not apply to taxiways which are controlled only by maximum grade and good engineering practice.

2.4 AIRSPACE CLEARANCE

In addition to the clearances for the approach surfaces on both ends of the runway, FAA standards call for a clearance area of 5000 ft. (1525 meters) radius from the center of the runway on which no obstruction is higher than 150 ft. (45 meters) above the runway surface. Furthermore, the air space surrounding the 10,000 ft. (3050 meters) diameter area shall be clear of obstacles above a conical surface at 20:1 slope rising from the center extending up to a horizontal distance of 16,000 ft. (4870 meters) in diameter. Figure 5 illustrates the airspace clearance requirement recommended by FAA.

2.5 CAPACITY

As a design reference, the capacity of an airport with a single runway can accommodate 75 take-offs or landings per hour by Visual Flight Rules (VFR) if the taxiway system is minimal. A higher number of take-offs or landings per hour can be achieved if the taxi-way system is complete. For Instrument Flight Rules (IFR), the capacity operation ranges from 4 to 15 take-off or landings depending on the installation and other conditions.

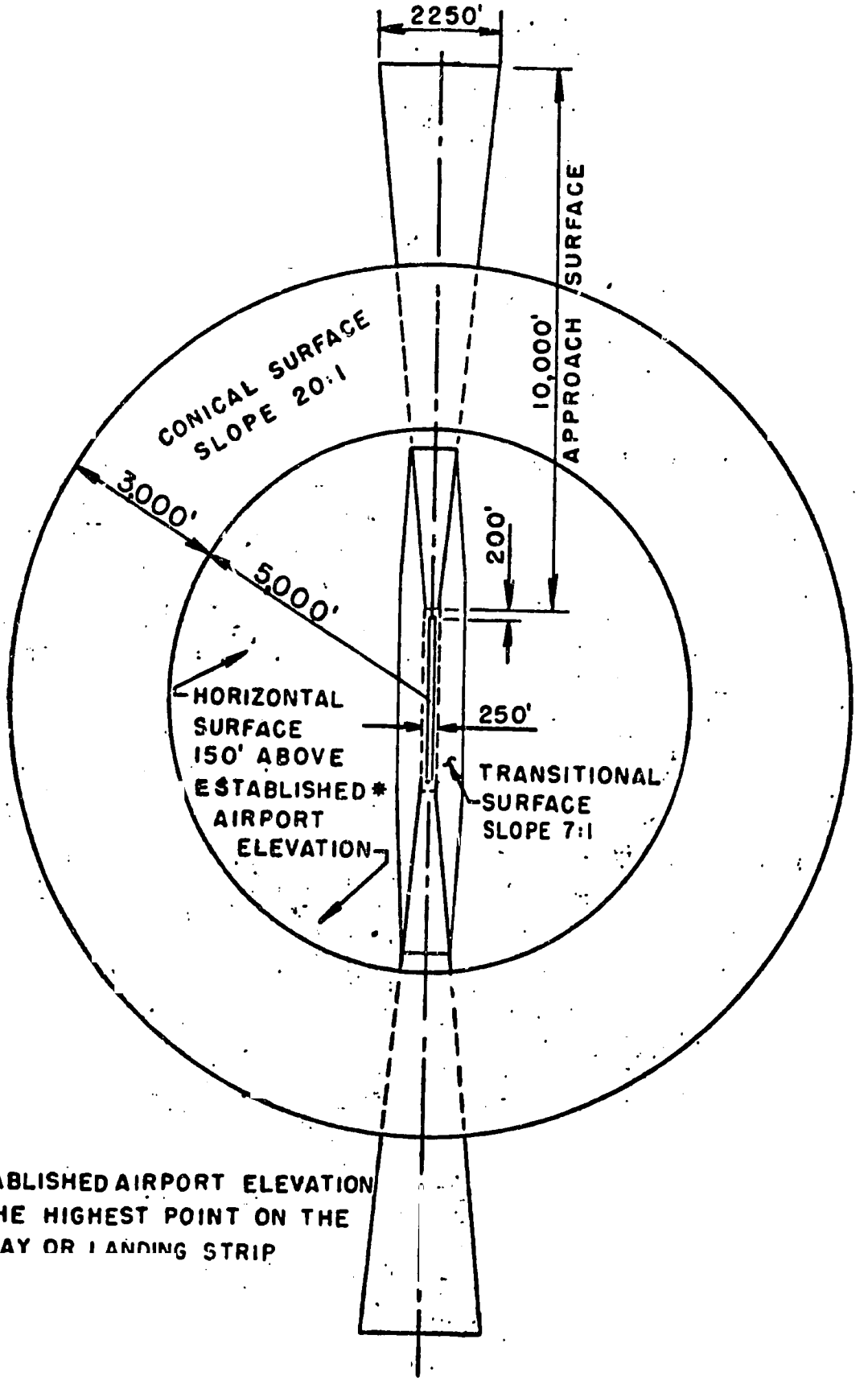

* ESTABLISHED AIRPORT ELEVATION IS THE HIGHEST POINT ON THE RUNWAY OR LANDING STRIP

FIGURE 5 AIRSPACE CLEARANCE

3. SITE SELECTION AND CONSTRUCTION

3.1 SITE INVESTIGATION

Many factors should be considered in selecting a site for the airport. The more important items are the following:

- Ease of getting to or from the airport.
- Effort to develop the site.
- Obstruction and surrounding restrictions.
- Interference with other nearby air traffic if any.
- Natural or man made undesirable conditions, such as fog from a lake or smoke from nearby process plants.

The major elements which must be included in the investigation are site clearing, soil conditions, drainage, grading, paving turfing, airfield lighting and utilities. Advisory Circular 150/5060-2 Airport Site Selection, published by FAA, U.S. Department of Transportation, discusses the factors in more detail.

3.2 GRADE

Grade is the measurement of levelness of the surface. It is usually denoted in percentage. A 1% grade is a slope surface that descends (or rises) one foot in elevation for a horizontal distance of 100 feet.

In the preparation of the land surface for the runway, it is neither desirable nor practical to grade the surface to a perfect level throughout the entire width and length. Some slope, either to one side of the runway or to both sides of the center line of the runway should be made to allow draining off of rain water on the runway. One and one-half percent grade is recommended for this purpose. Longitudinally along the runway, the rise and fall of the surface should be avoided as much as possible; however, for practical purposes, a 3% grade is allowable. The change of slope along the runway should be kept down to 2% or less. Generous round off of the "peak" or "valley" is necessary. One criterion of longitudinal runway grade is that two average height persons standing at any two points shall be able to see each other.

Lateral grade for taxi-way is also required. Along the taxi-way, it may have wider variation in grade change.

3.3 DRAINAGE

Drainage provision must be made in grading the land surface for the runway, taxi-way and parking ramp, etc. Generally, the rain runoff for an airport is designed for the maximum rainfall expected once in 5 years. In the investigation for drainage, it is important to include the areas beyond the airport boundary to assure adequate protection of flash flood from adjacent areas. FAA publication AC 150/5320-5A, Airport Drainage, discusses this subject and the related factors in detail.

Provision for drainage, in all cases, is planned together with grading for the surfaces. The drainage layout depends on the topography of the site. The collection of rain water runoff from the flight strip, taxiway, and parking area can be calculated if the surfaces are paved. For unpaved surfaces, Table 3 gives a guide in estimating the drainoff rate.

TABLE 3*

ESTIMATE OF RAINWATER RUNOFF

MAX RAIN FALL **	MAX RATE OF ANTICIPATED RUNOFF, CU FT/SEC													
	IMPERVIOUS SOIL							PERVIOUS SOIL						
	DRAIN OFF AREA, ACRES							DRAIN OFF AREA, ACRES						
	6	8	10	15	18	25	40	6	8	10	15	18	25	40
0.5	6	8	11	16	19	25	40	2	3	3	5	6	8	12
1.0	10	13	17	25	30	40	65	3	4	5	8	9	13	20
2.0	17	23	29	45	50	70	115	5	7	9	13	16	21	35
3.0	23	30	40	60	70	95	155	7	9	12	18	22	29	50

* Data compiled from U. S. Army Technical Manual TM-5-366
** Max Rainfall measured in inches/hour for one hour in a year.

The preferred drainage installation is the use of concrete or corrugated metallic pipes. For temporary provisions, open channels and ditches will serve the purpose. Estimate the drain ditch size according to the water runoff rate in cubic feet per second and the maximum velocity of flow in feet per second as given in Table 4.

TABLE 4

MAXIMUM FLOW VELOCITY IN OPEN DITCH*

Ditch Surface Condition		Flow Velocity ft/sec
Sand and gravel mixture	Mostly gravel	6-8
	Mostly sand	1-2
Silty Gravel and Silty Sand		2-3
Silty Clay Sand to Sandy Clay		2-4
Clays		2-3
Bare Rock		15-20
Average turf, clean bottom; bushes on sides		4-5
Dense turf, channel with tree stumps		6-8
Dense weeds		5-6
Dense brush		4-5
Paved or lined		15

*Data compiled from U.S. Army Technical Manual TM-5-366.

3.4 SOIL STRENGTH AND TESTING

The endurance of the runway and taxiway surfaces to sustain the planned number of operations, namely, takeoffs, landings and taxiing passes, depends on the factors such as tire load, tire size, tire pressure, and the strength of the surfaces. Whether or not the surfaces are planned to be paved or unpaved but somewhat prepared, the soil will have to support the repeated load of the tires which tend to follow a channelized pattern in traffic. Therefore, the soil strength of the airport particularly at the primary runway, taxiway, and parking areas should be evaluated.

Soil strength varies widely depending on composition, moisture content, and compaction. It therefore changes with depth even at the same spot. Usually soil strength increases with depth, but in some cases, a soil may have a thin hard crust over a deep, soft layer, or it may be composed of thin layers of solt and hard material. The climatic condition, water table, and drainage influence the soil strength to a great degree. No attempt is made here to explore the technology of soil mechanics or the various methods of testing and classification of soils. A simple testing device and a general evaluation criterion are given, however, as a guide in the planning and construction of the primary surfaces.

3.4.1 Penetrometer - Figure 6 is a simple soil strength tester adapted from the design of the airfield penetrometer, devised by the U.S. Corps of Engineers. The principle of the design and use of the cone penetrometer is very simple. The test is done by inserting the $\frac{1}{2}$ inch diameter steel rol, the end of which is ground to a 90° -inclusion-angle conical point, into the soil vertically to the depth at which the soil strength is to be tested. Then vertical force is applied to the hand bar on the upper end to see what force will cause the rod to sink down slowly. The applied force is measured by a spring, and the mark of the spring deflection is in tens of pounds. If the required force to move down the rod at the testing depth from the surface is 30 pounds, then the soil strength index at that level is said to be 3. A spring that can register a force up to 120 pounds is adequate for this purpose. In other words, the penetrometer as shown can register soil strength up to the index number of 12.

3.4.2 Penetrometer Test - It is rare that the soil strength is uniform in a large area enough for the runway and taxiway. The cone penetrometer test therefore should be done at fairly close spacings to get a good representation of the soil strength of the area. As a guide, the testing points along the centerline of the runway and taxiway should not be spaced more than 50 feet apart. At least 3 rows of testing points transverse the runway are recommended. If soft spots are suspected, additional test points should be selected.

Testing depths from the surface should be at 4, 8, 12, and 16 inches. For future reference, the test depth may run up to 24 inches or deeper at approximately 4-inch depth intervals. It should be noted that variation of test depth and spacing should be made according to the soil conditions. Caution should be exercised to avoid hitting small rocks which may register false soil strength index.

The penetrometer test should be conducted before grading in order to plan for the construction of the runway and taxiway. If no pavement is planned at the moment, the grading operation should include the surface preparation which is discussed in later paragraphs. The "finished" runway and taxiway should have the soil strength as recommended for different types of airplanes. If pavement is planned for the runway and taxiway, test by the penetrometer or by some other more elaborate method should be conducted after the grading to assure the proper soil strength for the planned pavement thickness.

3.5 UNPAVED RUNWAY, TAXIWAY AND SURFACE ROUGHNESS

If at all possible, plan to pave the runway and taxiway. There may, however, be instances when an unpaved airstrip has to be planned either for temporary duration or because of economic limitations. This paragraph gives guidance for preparing such airstrips. In any event, some kind of runway surface treatment should be performed to prevent drastic degradation of soil strength due to rainfalls and to suppress dust in dry seasons.

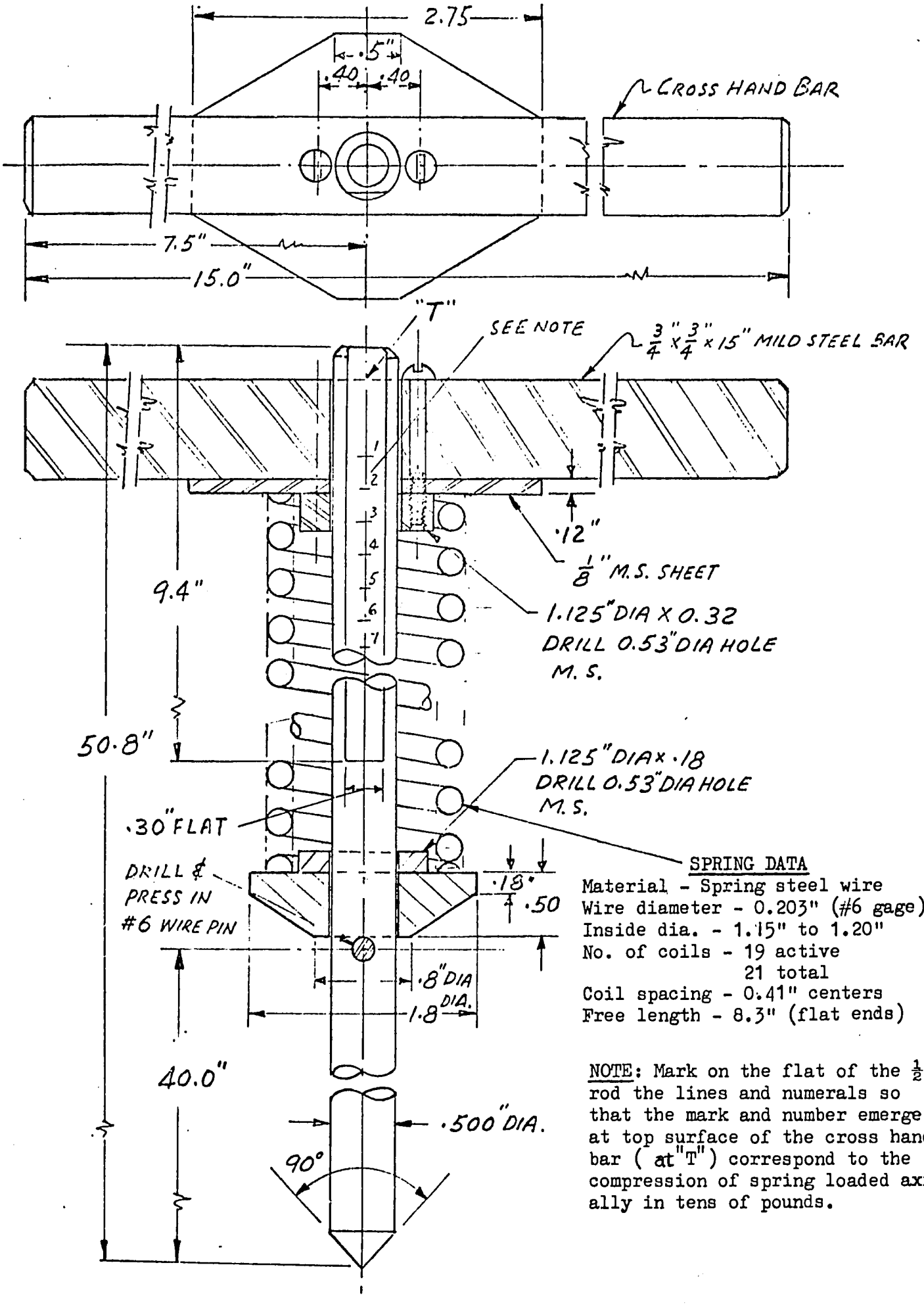

SPRING DATA

Material - Spring steel wire
Wire diameter - 0.203" (#6 gage)
Inside dia. - 1.15" to 1.20"
No. of coils - 19 active
21 total
Coil spacing - 0.41" centers
Free length - 8.3" (flat ends)

NOTE: Mark on the flat of the ½" rod the lines and numerals so that the mark and number emerge at top surface of the cross hand bar (at "T") correspond to the compression of spring loaded axially in tens of pounds.

FIGURE 6 PENETROMETER FOR TESTING SOIL STRENGTH

Two factors should be considered for the construction of unpaved runways: (1) runway strength, the ability to sustain repeated loads of the airplane tires for an expected number of operations, namely, take-offs, landings and taxiing passes; (2) surface roughness, the initial allowable roughness in terms of bumps and holes and the increased degree of roughness such as ruts and washboard waves after many operations. Both considerations are closely related to the soil strength. Table 5 shows the recommended soil strength for the designated airplane groups in terms of the penetrometer index. As for surface roughness, the capability of each airplane to negotiate roughness at different speeds is different. In general, larger tires with low tire pressure is an indication of higher runway roughness capability. Most airplanes are designed for pavement unless otherwise specifically noted for rough field operation. The operation of an airplane over "rough" runways should be evaluated for each airplane by the airplane manufacturer. Rough surfaces degrade the take-off performance, usually requiring longer take-off runs, and cause overload conditions on the landing gear and other structures resulting in premature failures or reduction in service life. Figure 7 attempts to define the degrees of unpaved runway surface roughness by the maximum depression depth as measured below a line stretched over two adjacent peaks at a horizontal distance along the runway. The pattern of rise or fall is assumed in a gentle rolling wave, not a steep rise or drop. The distance between the two adjacent peaks is called the wave length, and the depression depth is called the total amplitude. It should be noted that paved surfaces usually do not have the short wave-length roughness but contain long waves.

Loose rocks larger than 40% of the height which the rolling wheel flange can clear when the airplane is fully loaded should be removed. Pot holes or transverse ruts wider than 25% of the tire foot print (tire-ground contact area) length should be filled and repaired. Longitudinal ruts should be flattened. The formation of ruts is an indication that the soil strength is insufficient for the operation.

TABLE 5

SOIL STRENGTH REQUIREMENTS FOR UNPAVED RUNWAYS

RUNWAY FOR AIRPLANE GROUPS	PENETROMETER INDEX				
	DEPTH FROM SURFACE, INCHES (CENTIMETERS)				
	Top Layer*	4-8 (10-20)	8-12 (20-30)	12-16 (30-40)	16-24 (40-60)
I	3.7.1, 2, 3, 4	8 MIN	7+	6+	5+
II	3.7.2, 3, 4, 5	8	8+	7+	6+
III	3.7.2, 3, 4, 5	10	9+	8+	7+
IV	3.7.2, 3, 4, 5	12	11+	10+	9+

*SEE UNPAVED RUNWAY SURFACES (PARA. 3.7) FOR DEFINITION OF NUMBERS.

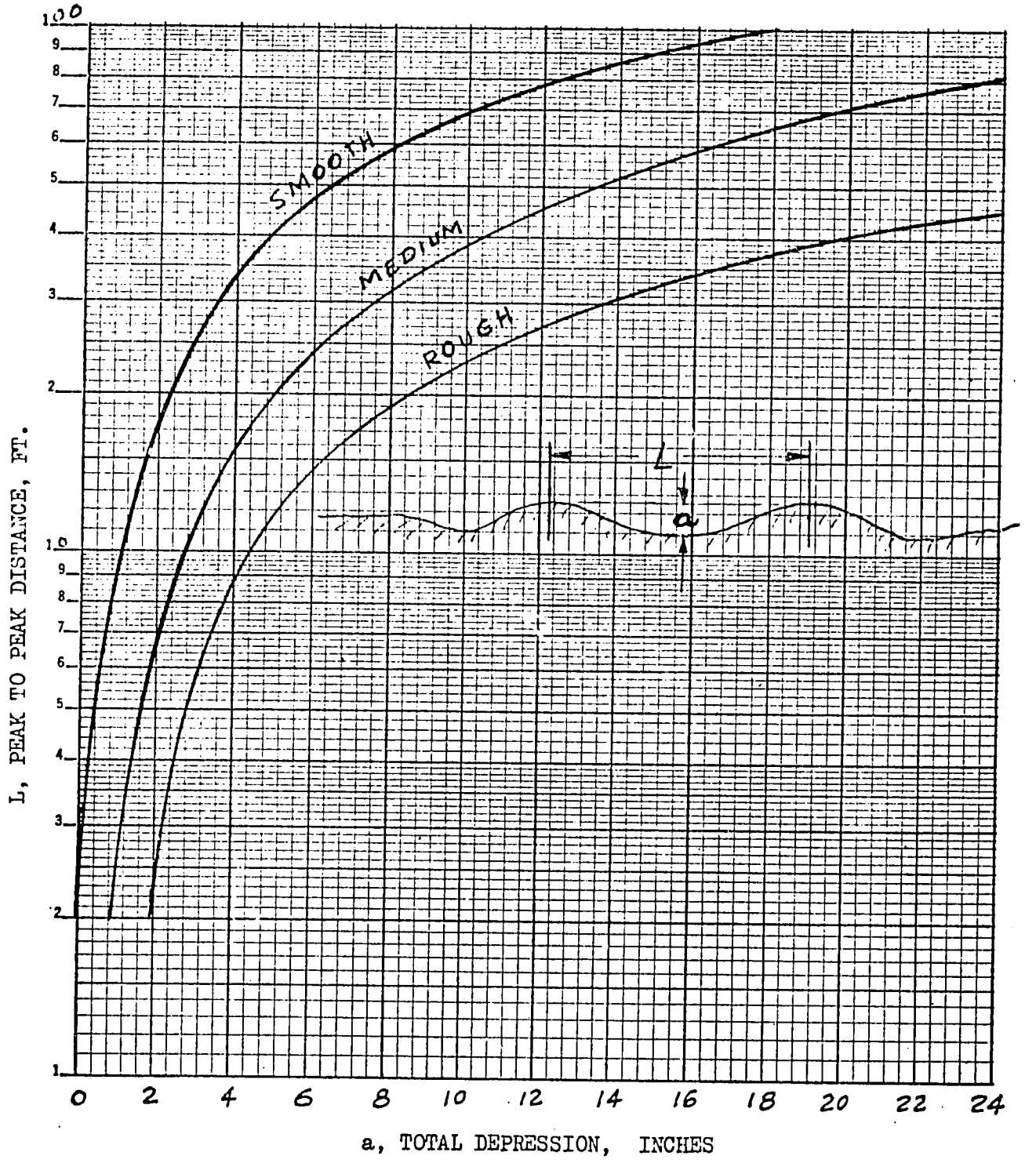

FIGURE 7 DEGREES OF SURFACE ROUGHNESS

3.6 UNPAVED SURFACES TREATMENT

The unpaved surfaces referred here are the clearance areas on both sides and ends of the runway and those about the taxiways, which are not subjected to airplane tire loads in normal operation. The surfaces, however, should be treated to prevent erosion and dust. Usually, turfs are best suited for these surfaces. Other methods of surface treatment for the unpaved runway and taxiway also can be applied to a lesser degree, depending on the local conditions and the planned usage of the airport.

3.7 UNPAVED RUNWAY SURFACES

The surface preparation of the unpaved runway should meet two requirements: (1) maintaining the runway strength under all climatic conditions and (2) suppressing dust. Soil strength is usually drastically degraded due to rainfalls if proper "water proofing" and drainage are not provided. On the other hand, extremely dry climate tends to produce excessive dust from the bare soil surface for airplane operation.

The preparation of unpaved runway surface then is dependent on the local climatic variation, soil type, and topography of the landing strip. A few typical methods of surface preparation are given below:

3.7.1 Sod - For very light tire loads and infrequent operation of the airstrip, sod surface may be satisfactory. Maintenance in keeping down turf growth and compaction of the surface is required.

3.7.2 Portland Cement and Soil Mixture - The runway surface treatment can be accomplished at the grading operation. Mixing portland cement into the top layer of soil improves the soil bearing strength and provides water resistance and dust control capability to the surface.

After final grading, the top 4 to 6 inches of soil is scarified and pulverized as best as possible at the prevailing moisture content. The approximate amount of cement, according to the following proportion, is evenly spread over the loose soil surface, either by hand or by a spreader. The soil and cement are then thoroughly blended by admixing, and the resulting mass is compacted to the attainable maximum densification. Compaction should be accomplished as quickly as possible after completion of the mixing, preferably no longer than one hour afterward. If the soil is predominantly clay, the existing soil moisture content will usually be greater than optimum for compaction. In silts or clayey silts, the moisture content may be less than desired, and in this case, water should be added to achieve good compaction. Care must be exercised to distribute the additional water evenly, thoroughly mixed with the soil and cement mass. If the soil is predominantly sand, additional water is necessary for compaction. Following compaction, the surface is shaped for the desired crown, longitudinal grade, and smoothness, then wetted down with water and allowed to cure for one to three days.

For good results, the following proportions of cement should be used:

Soil Type	% of Portland Cement by Dry Weight
Sands	3-5
Silts and Clayey Silts	4-6
Clays	6-8

3.7.3 Lime and Soil Mixture - Hydrated lime or quicklime may be used as additives to the soil instead of Portland cement as described in 3.7.2 above. Hydrated lime is noted for improving the strength and compaction property of clay soils or coarse soils containing excessive clay fines. Its reaction with the mixture is much slower than cement, however. Generally, seven days or longer curing time is required. "Quick" lime has an influence on the soil similar to hydrated lime except that the reaction time is much faster, a matter of 2 to 4 hours. The drying effect of the soil will be achieved almost immediately after quicklime has been blended with a wet soil. Caution should be taken in handling quicklime, since it can produce severe burns quickly when in contact with perspiring or moist skin.

The recommended proportions of lime additive for soil stabilization are as follows:

Soil Type	Approx.% of Lime by Dry Weight	
	Hydrated Lime	Quicklime
Clayey gravels	2-4	2-3
Silty Clays	5-10	3-8
Clay	3-8	3-6

3.7.4 Bitumen and Soil Mixture - Sandy or essentially cohesionless soils can be mixed with bituminous additives for improvement in water proofing, dust control and to a lesser degree, bearing strength. Soils having more than 30% dry weight of particles passing the No. 200 sieve and/or a plasticity index greater than 10 generally are not adaptable to bituminous treatment, however. Micaceous soils and those containing high organic content do not respond well to bituminous additives. The major disadvantages of using bituminous material in treating the soil surface are (a) a comparatively large quantity of bitumen is generally required; (b) the soil type should be favorable, (c) the results are highly dependent on the correct mixture proportion, and (d) the curing time is relatively long.

The addition of bitumen to the soil for surface treatment can be done in place as described in 3.7.2 and 3.7.3 above or by employing a traveling plant or stationary plant for mixing. The usual procedures are (a) pulverize the soil to the required depth, (b) adjust moisture content if necessary for proper mixing, (c) add bitumen and mix thoroughly, (d) aerate to proper consistency for compaction, (e) compact with sheepsfoot or rubber-tire roller,and (f) final grade of the surface. The quantities of bitumen to be used are recommended as follows:

Soil Type	Approx Proportion of Bituminous Material (Bitumen weight as % of soil dry wt.)	
	Asphaltic Cutbacks	Asphaltic Emulsion
Sands	5-7	5-7
Silty Sands	6-10	6-10
Clayey Sands	6-10	6-10

3.7.5 Gravel, Cement, and Soil Mixture - This surface preparation is essentially similar to the dry mixture of concrete. Depending on the availability of material and equipment, the mixture can be made in place or by a concrete mixer and spread over the runway area. Rolling compaction is needed after the mixture is spread, and the desired surface shape and grade can be controlled by adding or removal of mixture mass before compaction. The surface is then wetted down and allowed two to three days to cure.

3.8 PAVEMENTS

Two kinds of pavements are available for runways and taxiways as well as for parking area and ramps. The rigid pavement is Portland cement concrete, and the flexible pavement is an asphaltic concrete over an aggregate base and subbase of crushed stones and gravels. The design criteria and construction requirements of pavement for airport have been well established by the FAA, Corps of Engineers, and local government agencies, as well as by Portland Cement Associates and the Asphalt Institute. Refer to the appropriate organization for details.

4. MARKING AND LIGHTING

4.1 INTRODUCTION

For operational safety of aircraft, an airport needs markings for easy identification by the pilots from the air. For daytime operation, conspicuous markings to show the boundary of the airstrip and ends of the runway can be done by a number of ways, depending on the durability consideration of the markings. For night operation, lights to show the edges of the runway are needed. In addition, lights to give visual approach aids and to identify obstructions, if any, in the area should be installed. The Federal Aviation Administration of U. S. Department of Transportation can provide information on permanent installation of airport markings and lighting. The available publications are listed in the Reference section. The following paragraphs suggest a few simple samples of temporary installations.

4.2 AIRPORT MARKING

Two purposes should be achieved in airport markings: (1) boundaries of the runway and its approaches and (2) identification of the airport. These markings should be easily detectable by the pilots from the air and should not be confusing with the surrounding backgrounds.

4.2.1 Runway Boundary Marking - For unpaved runways, the edges of the landing strip can be marked by painted 55-gallon drums or other similar objects placed about 60 to 80 feet apart along both sides of the strip in two straight lines about 10 feet away from the designated runway edges. Another simple way of making markers is to nail two pieces of wooden boards, about two feet wide, three feet long, each, into an A-shape gable roof type structure with two bars at ends as braces -- the longer dimension of the boards being joined together as the ridge. A sufficient number of markers should be made and placed along the edge of the landing strip. The markers should be painted with light color. Make the markers in the same shape and size, and paint them the same color. Figure 8 illustrates a typical construction of an edge marker and the locations of the edge markers.

Many other varieties of markers can be used for the purpose of edge marking. Good contrast from the surrounding background and uniformity in shape are the basic rules. For marking the runway ends and the approaches, the important considerations are: (1) conspicuousness and (2) that the airplane wheels will roll over the markers. The markers at the ends of the strip should therefore be flush with the surface -- preferably with three or four strips spanning across the full width of the designated runway, each stripe being one to two feet wide and spaced about 4-5 feet apart. These stripes can be made by using differently colored soil or small rocks which are compacted into the unpaved surface and yet are readily distinguishable from the basic soil or surface of the landing strip.

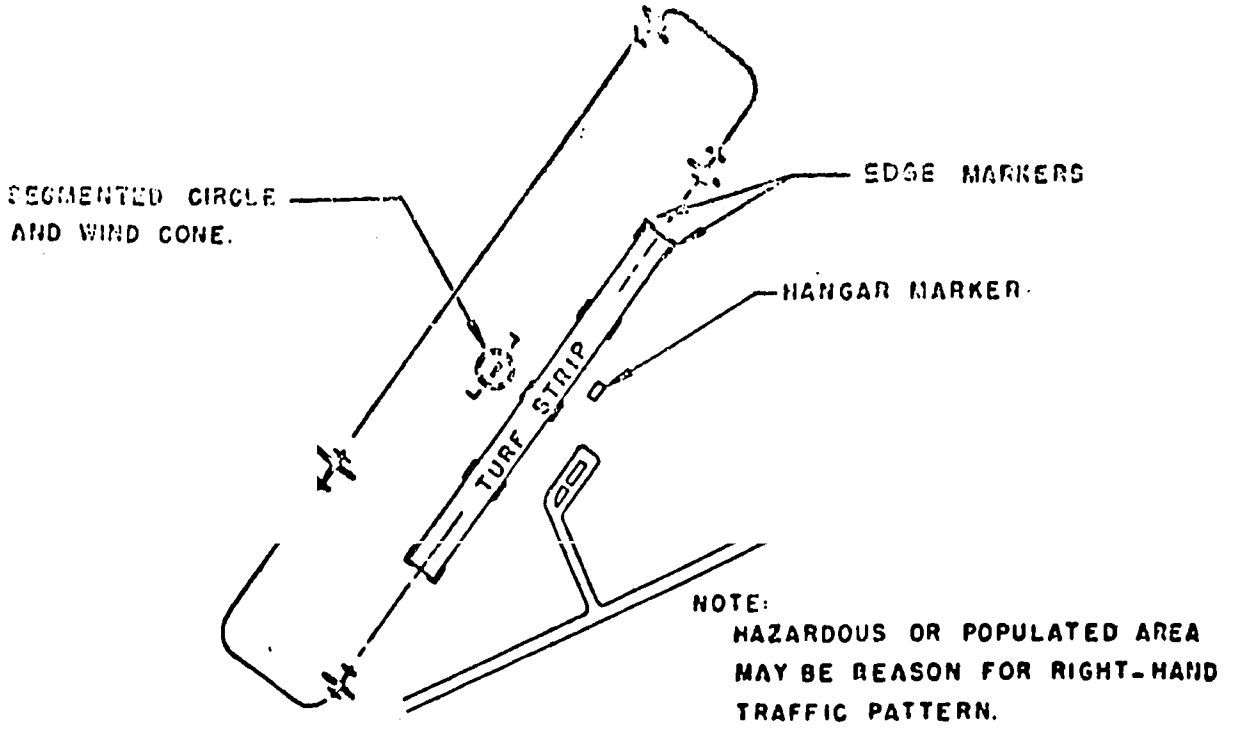

LOCATION OF MARKING

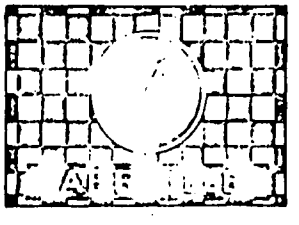

NOTE:
ARROW INDICATES TRUE NORTH

HANGAR MARKER

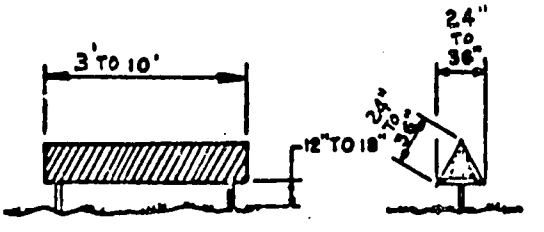

EDGE MARKER

FIGURE 8 EDGE AND HANGAR MARKERS

In some areas snow may cover the landing strip for some period of time. For runway marking in this case, panels in the form of a "T" in black or other dark color should be placed at each end of the runway. The horizontal bar of the T should be at the end of the runway and the vertical bar of the T designates the center line of the runway.

For paved runways, the markings are painted on the surface. Usually a center line is painted instead of the runway edge markings. The runway ends and approaches are also painted with desired designations.

4.2.2 Identification Markings - One of the principal means of identifying the airport is the Segmented Circle Airport Marker System recommended by the Federal Aviation Administration of U.S. Department of Transportation. Basically, it consists of a 100-foot diameter circle composed of at least 18 segments with a wind direction indicator in the center. When deviation from the standard left-hand traffic pattern is necessary due to obstruction or the avoidance of hazard or over a populated area, a marker indicating the prescribed traffic pattern should also be installed.

The construction of the Segmented Circle Marker is similar to that for the runway edge markers. One construction of the marker is illustrated in Figure 9. If paving material is available, the markers can be made by placing the surfacing material in the prescribed locations and shapes. Painted concrete slabs, either cast in place or prefabricated, are perhaps the best permanent markers.

Other identification markings for the airport can be used on the buildings such as hangars and storages. White and orange are the preferred colors for easy visual detection. Figure 8 shows a typical hangar marker.

If obstructions are present in the airspace as defined in Chapter 2, the obstruction should be marked by painting alternate bands or checker squares of orange and white.

Another type of marking is the signs showing directions to service areas and other designated locations. Sign boards should be placed at conspicuous places, easy for the pilot to see but not interfering with the aircraft operation. Ground transportation to and from the airport also requires good direction signs for efficient operation of the airport.

4.3 AIRPORT LIGHTING

For night operation of the airport, the following light installations are required. An electrical lighting system provides good control with minimum operational and maintenance effort once installed. Electric power can be generated by an independent generator unit if the power source is not

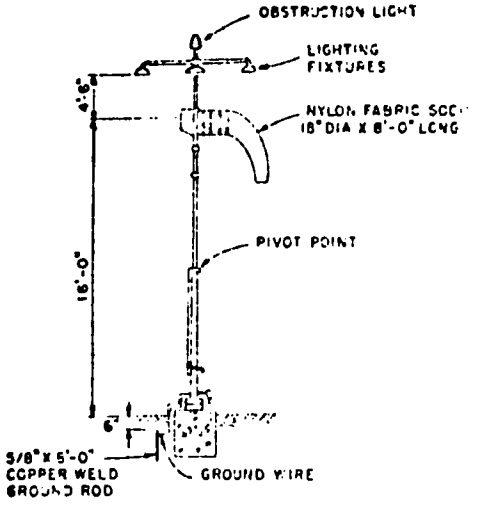

EIGHT FOOT WIND CONE

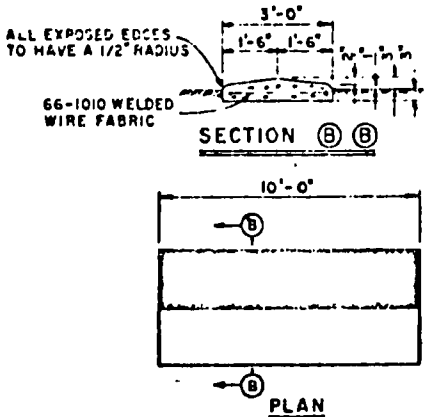

CONCRETE SEGMENTED CIRCLE DET.

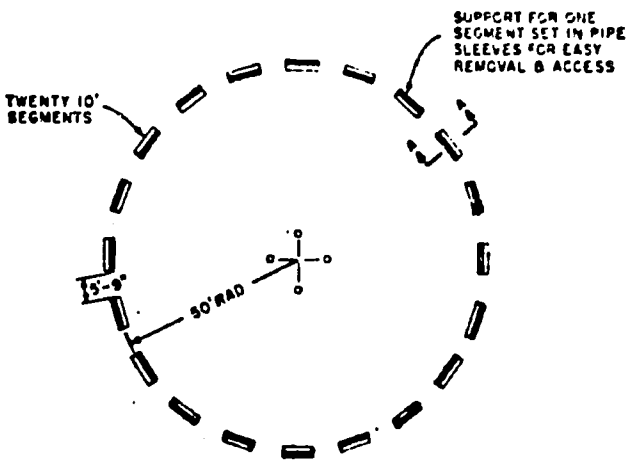

PLAN

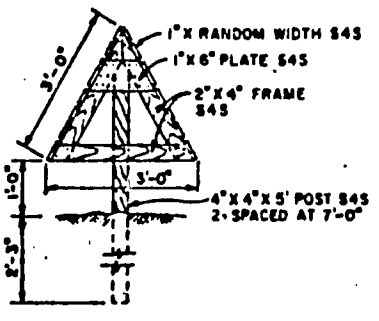

SECTION "A-A"

NOTES:

1. WHITE
   INTERNATIONAL ORANGE
2. SEE DETAIL OF ALTERNATE CONCRETE TYPE SEGMENTED CIRCLE MARKER.

FIGURE 9 SEGMENTED CIRCLE MARKER & WIND CONE

readily available. For special isolated cases, kerosene lanterns, smudge pots, vehicle head lights, or reflectors can be used to indicate the runway edge limits. Consult the cognizant government agencies in designing the light installations so as to be compatible with the regulations.

4.3.1 Runway and Taxiway Edge Light - Medium-Intensity Runway Lighting System (MIRLS) is an economical design to delineate the runway and taxiway edges at night. Figure 10 shows a typical layout of a MIRL system. The runway edge lights are elevated, omnidirectional, fixed (i.e. steady burning lights with clear lenses). The runway threshold lights are green and outline the limits of the runway length. Taxiway edge lights are blue. Lighted guidance signs are installed at the intersections of a taxiway and the runway.

4.3.2 Approach Lighting - These are installed for helping the pilots to locat the runway at night or during restricted visibility conditions. Several types are available, some are adaptable to instrument approach procedures. Consult the government agencies and specialists in this field before making plans for installation. Two simple types are described below:

a. Runway End Identifier Light System (REILS). The system has two flashing lights, located at the end of the runway which har the runway edge and threshold lights installed as shown in Figure 10. The best location of the REIL is at 40 feet out on each side of the runway edge lights and in line with the threshold lights. The beam axis of each unit is oriented 15° outward from the runway centerline and inclined at an angle of 10° above the horizontal. These flashing lights emit white light and have no intensity adjustment.

b. Abbreviated Visual Approach Slope Indicator System (AVASI) or Lockheed Visual Approach Path Indicator (VAPI). AVASI system has two light units located 50 feet from the left edge of the runway when the system is viewed from the approach zone. The light units are installed in a line parallel with the runway edge. Each light unit emits a two-color (red and white) light beam. When the lights are properly aimed toward the approach zone, the pilot in an approach aircraft sees the while light when he is coming in within the allowable glide slope; otherwise, he sees the red light is he is approaching either too high or too low. The Lockheed VAPI emits three controlled beams of light in three colors, red, green and amber. The beam angles from the light source is set for the desired approach slope from the horizontal to aid the approaching pilot in a correct glide path.

4.3.3 Beacon Light - The purpose of a rotating beacon is to aid pilots for locating the airport at night. The rotating beacon flashes alternate white and green beams with the white flash of the basic signal double peaked. The number of total flashes is 12 to 15 per minute. The station beacon should be located not closer than 650 feet nor more than 4500 feet from the control tower and so positioned that it is not in the line of sight between the control tower and the final approach of the runway or any runway if

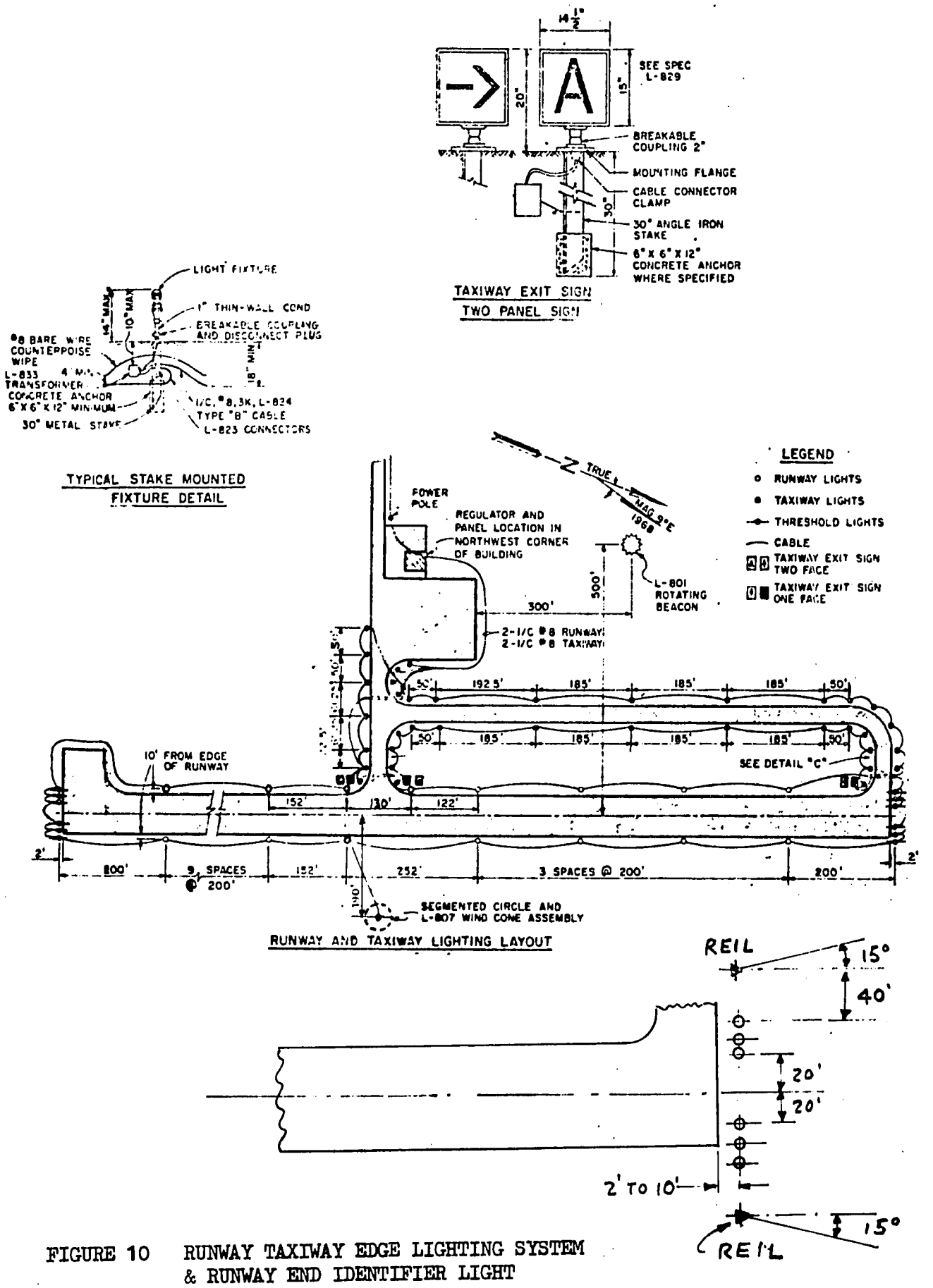

FIGURE 10 RUNWAY TAXIWAY EDGE LIGHTING SYSTEM & RUNWAY END IDENTIFIER LIGHT

there are more than one. The beacon should be so installed that its base is not less than 15 feet above the level of the floor of the operation room of the control tower or platform.

4.3.4 Wind Indicator Light and Obstruction Light - The wind indicator or wind sock should be illuminated for night operation. The illumination may be provided by shielded lights shining on the indicator, or the lighting may built-in with the indicator. For obstruction or hazard warning, 100-watt obstruction light or flashing red hazard lights should be installed at the appropriate place(s). The obstruction light is installed on the top of a pole, building, or structure. For structure that is higher than 120 feet, additional warning lights should be installed at different levels which will aid the pilot to notice the tall obstruction readily. If hills and tall trees are near the airport area, even though below the airspace requirement, it is good practice to install warning light poles at the appropriate location to enhance operational safety at night.

4.4 WIND INDICATOR

The simplest and also most useful ground surface wind indicator is the wind sock. The sock, or the cone as it is also called, is made of light cloth, white in color, preferably of nylon for durability in weather, in the shape of a cone. The base diameter of the cone is about 18"; the cone is open and attached to a ring formed by steel wire, aluminum tubing or strap. The ring is mounted vertically with the vertical diameter as the pivoting axis. A typical wind cone construction is shown in Figure 9. It is important that the pivot is free to rotate so that any slight breeze will orient the tail of the cone to the down wind direction. The cone is mounted on a pole or a simple stand with the center of the base cone about 16 feet above the ground. If there is a segmented circle identification marking, the center of the circle is a good place for the wind cone. The wind sock should be lighted by shielded overhead lights to give the pilot ground wind information if no ground radio communication is available for night operation.

There are other ways to construct a wind indicator. Some more sophisticated designs also give the wind speed as well as the ground wind direction. In other cases, wind condition is transmitted to the pilot by radio from a ground controller.

5. FACILITIES AND EQUIPMENT

5.1 INTRODUCTION

The facilities for an airport are planned to suit the need. As the need increases, the facilities will have to be expanded either in size or in additional installation. This section discusses only the minimum essential facilities related to the operation of an airstrip or a utility airport.

5.2 PARKING AND TIE DOWN

The requirement of this facility is obvious but is not readily known for a new airport. In general, consider the requirements of the itinerant aircraft and the based aircraft. The itinerant aircraft parking apron should be located close to the terminal building, the refueling, or other service areas. Usually more space is allowed for parking the transient aircraft. As for the based aircraft, the parking apron should be separate and require less space per airplane. Usually, 300 square yards is sufficient for most single engine or twin engine light aircraft.

For paved parking aprons, the tie-down rings are similar to anchor bolt installations in the pavement. If the parking apron is not paved, the tie-down rings can be anchored into the ground by a steel rod or bolt, $\frac{1}{2}$ inch in diameter or larger, 18 inches or longer with an end plate 10 inches square or larger. The end plate is buried into the ground with the top of the rod in the shape of a hook or a ring flush with the ground surface. Compact the soil around the tie-down rings. Three tie-down rings are required for one airplane: one for each wing and the third for the tail (or nose as the case may be). Figure 11 shows two typical layouts of tie-down provisions.

5.3 POWER, WATER, AND SEWAGE

In many areas electric power and water supply are not problems in planning and building an airport. For some isolated remote locations, however, the requirements for power and water during construction and operation of the airport may be extremely difficult to provide. No attempt is made here to specify the quantitative requirements of electric power supply and water and sewerage provisions except to point out the need of these in the planning. Each item, indeed, can be locally supplied, such as independent electric power generator unit, water well and pumping unit, and septic tank installation for sewage disposal.

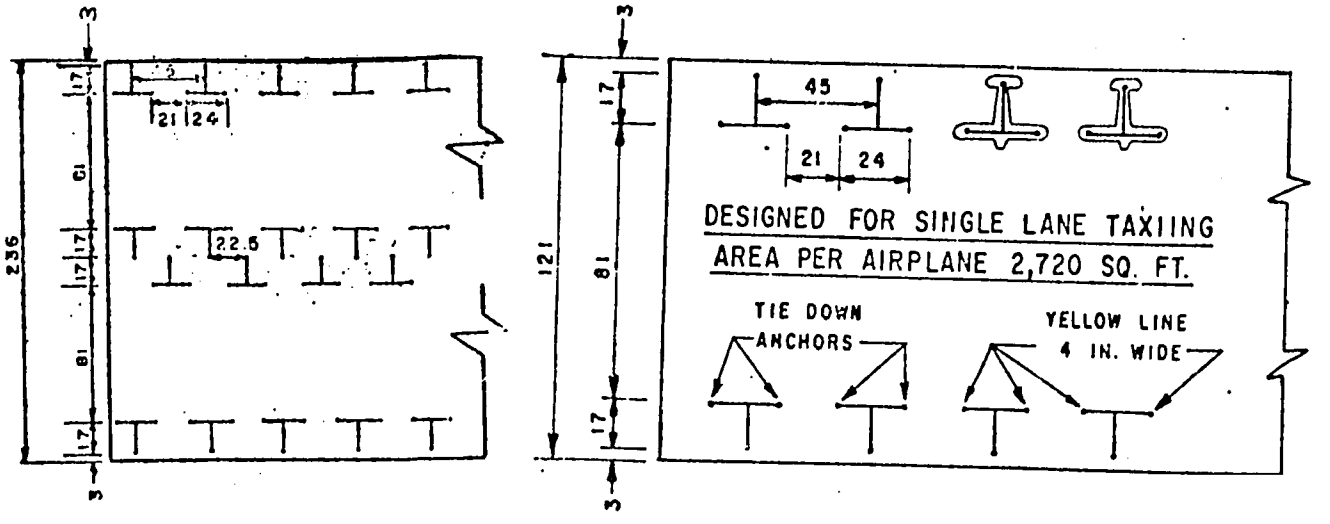

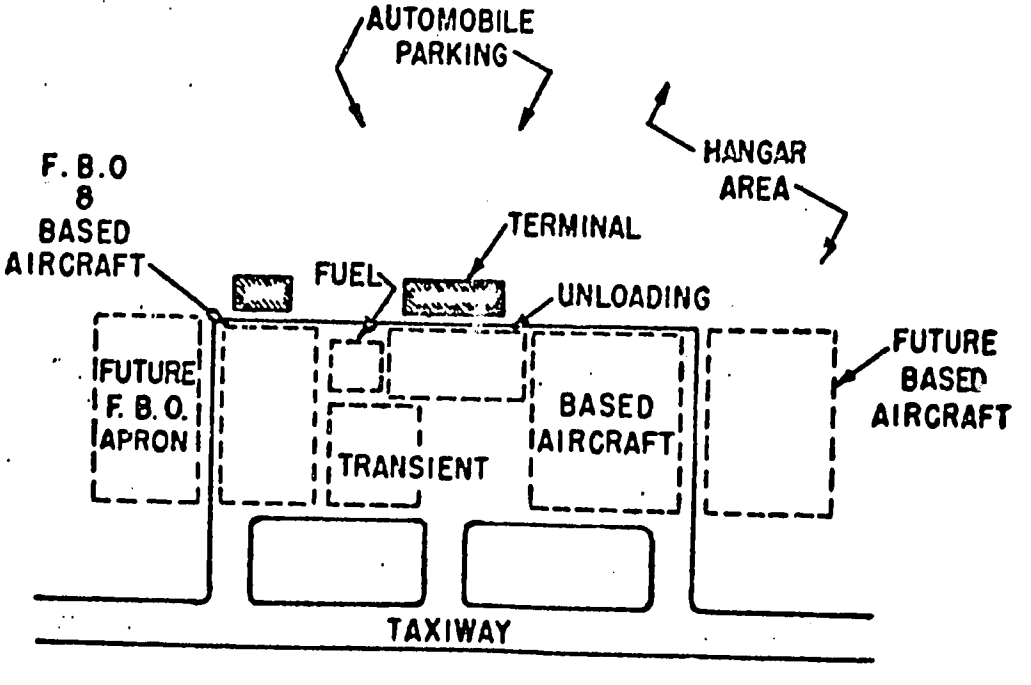

FIGURE 11 TYPICAL LAYOUT FOR PARKING & TIE DOWN PROVISIONS

5.4 FUEL AND OIL STORAGE

Fuel and oil sotrage usually is planned and cared for by the franchised commercial company at the airport supplying aviation fuel and oil. The planning is then limited only to the designation of space and location for the storage and refueling facilities. If a commercial contract for supplying fuel and oil is not in effect with an established company, however, the supply of aviation fuel and oil will have to be stored at the airport. The storage area should be fenced and be at least 450 feet away from the immediate vicinity of the air traffic area. Fuel tank trucks or carts for refueling should also be provided.

5.5 CONTROL TOWER

Where provided, the control tower is located adjacent to any landing strip which requires traffic control, usually a minimum of 100 feet from the nearest edge of the runway shoulder and preferably beyond any parallel taxiway. The design height above ground level and the location should be such as to permit the control tower operator to see aircraft at any point on the runway and taxiway and to see all airborne aircraft in the vicinity of the field, atmospheric conditions permitting.

5.6 BUILDINGS AND HANGARS

Airport buildings are constructed to fulfill the needs of specific aviation activities. The Fixed-Base Operator's (FBO) building usually provides space for the commercial activities - maintenance and repair of aircraft, air charter, etc. The administration building accommodates the public, the pilots, passengers, and visitors. It may also house the airport manager's office. Small aircraft hangars generally are constructed only for the storage of the aircraft. Figure 12 illustrates a typical layout of the building area suitable for a utility airport.

Whether an administration building is required at an airport is a question to be answered after weighing at least two factors: (1) operationally, if a building other than a tent for housing a flight information center is needed; and (2) economically, if an administration building is justified depending on the utilization and the financial capability for this facility. A typical layout of a small administration building together with the usually required functional areas is shown in Figures 12 and 13.

Various types of hangars are designed for the specified purpose. Prefabricated T-hangars are available in many sizes and lengths. Detail on the construction and erection can be obtained from many manufacturers. For the airplane types which are described in Table 1, the clearance of 75 feet between T-hangars is sufficient for one-way traffic. For two-way traffic between T-hangars, 125 feet clearance is required.

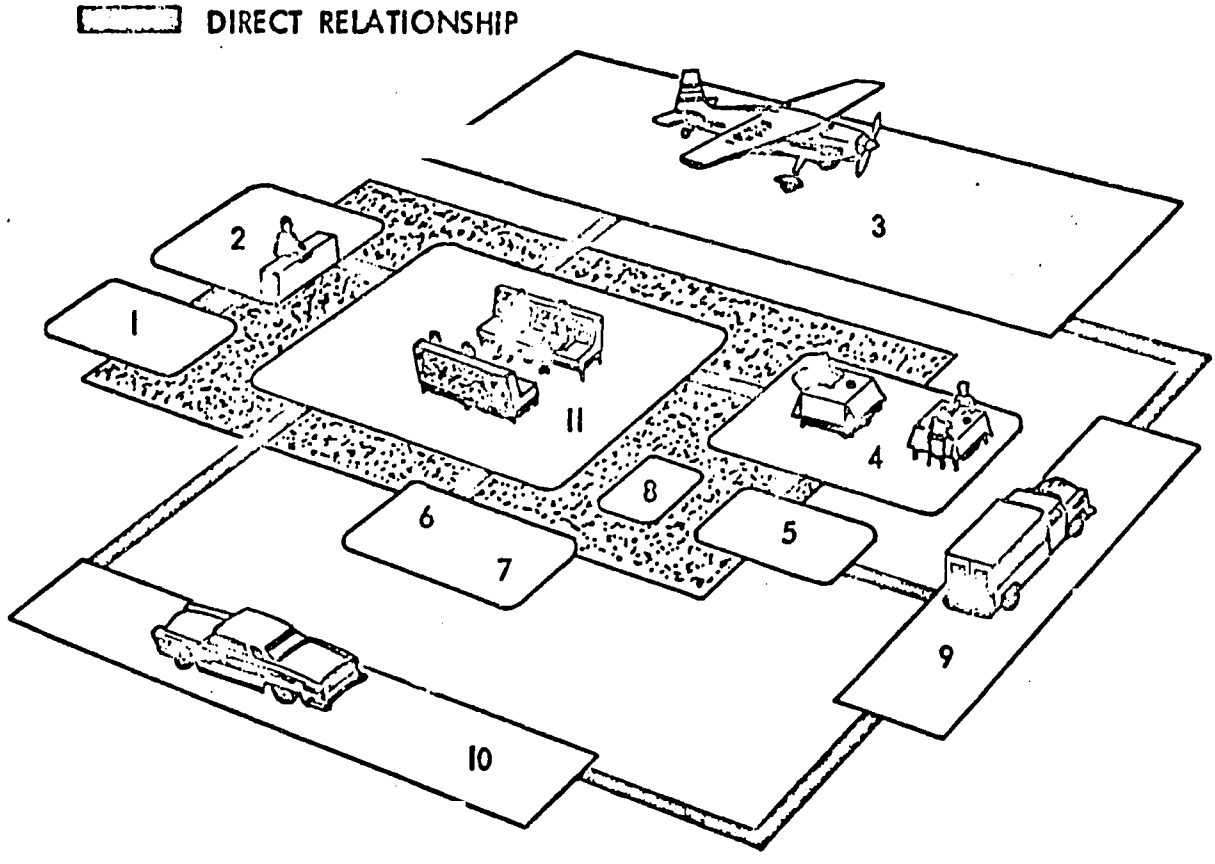

1 STORAGE
2 OPERATION MANAGEMENT
3 AIRCRAFT LOADING APRON
4 DINING AREA
5 KITCHEN
6 REST ROOMS
7 JANITOR CLOSET
8 UTILITIES
9 SERVICE AND APRON ACCESS DRIVE
10 ADMINISTRATION BUILDING DRIVE
11 WAITING AREA

FIGURE 12 TYPICAL LAYOUT OF AN ADMINISTRATION BUILDING

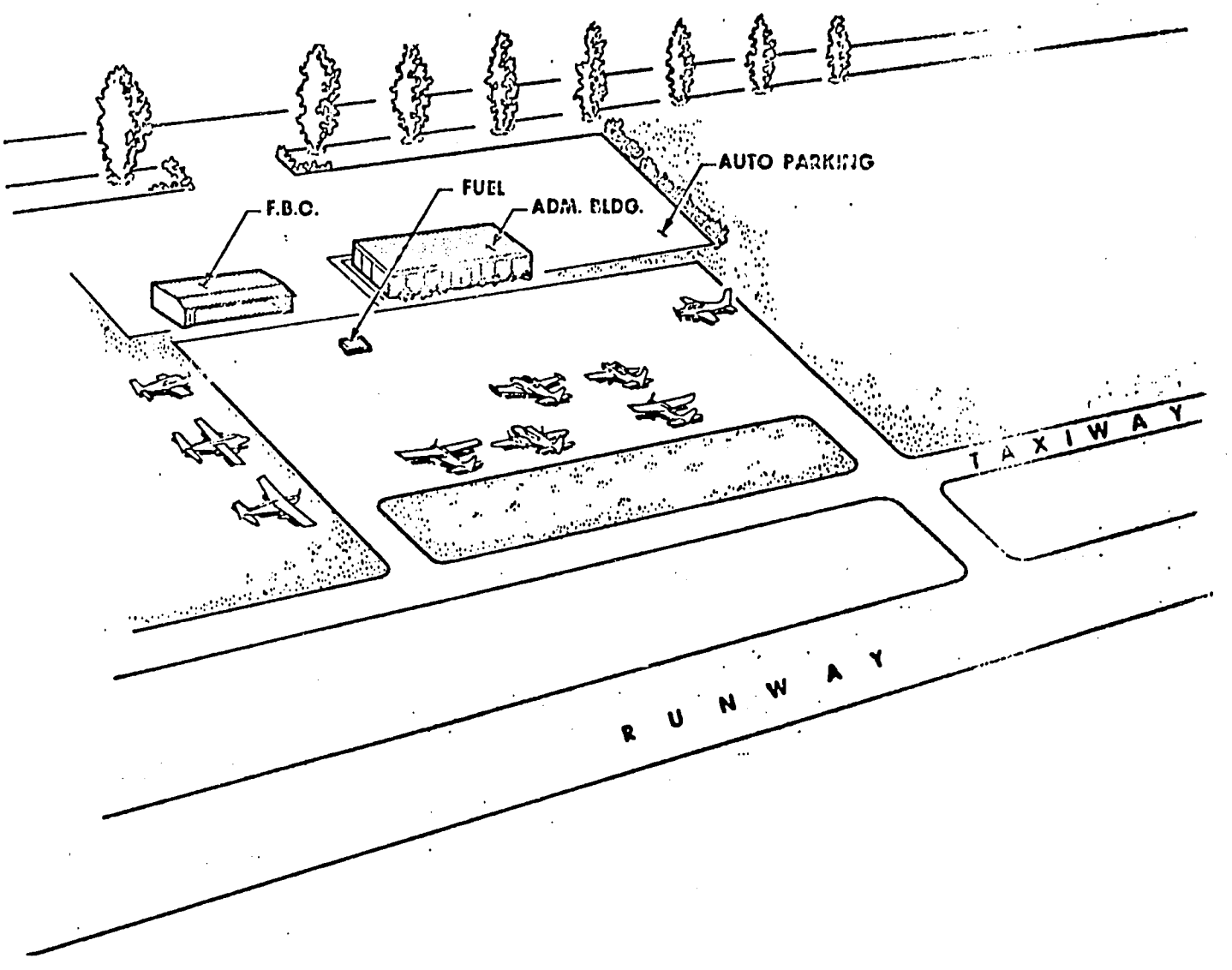

FIGURE 13 LOCATION OF BUILDINGS

REFERENCES

1. Utility Airports AC 150/5300-4A, Federal Aviation Administration, U.S. Dept. of Transportation, Washington, D.C.,November 1968.

2. Planning and Design of Roads, Air Bases, and Heliports in the Theater of Operations, AFM 86-3 Vol. II, Dept. of Air Force, U.S. Government Printing Office, September 1968.

3. FAA: BIBLIOGRAPHY, Federal Aviation Regulation Part 151, Federal Aid to Airports.

4. FAA: Airport Drainage, AC 150/5320-5A.

5. FAA: Obstruction Marking & Lighting, AC 70/7460-1.

6. FAA: Tie Down Sense, AC 20-35.

7. FAA: Airport Site Selection, AC 150/5060-2.

8. FAA: Airport Planning and Airport Layout Plans, AC 150/5310-2.

9. FAA: Airport Paving, AC 150/5320-6A.

10. FAA: Marking of Serviceable Runways & Taxiways, AC 150/5340-1A.

11. FAA: Segmented Circle Airport Marker System, AC 150/5340-5A.

12. FAA: Economy Approach Lighting Aids, AC 150/5340-14A.

13. FAA: Taxiway Edge Lighting System, AC 150/5340-15A.

14. FAA: Airport Maintenance, AC 150/5380-1.

15. FAA: Security of Aircraft at Airports, AC 150/5200-6.

16. Add an Airpark, Piper Aircraft Corp., Lockhaven, Penn. 17745, 1963.

17. Master Plan Guide for Airports, Michigan State Aeronautics Commission, Lansing, Mich. 48933, June 1966.

18. 8 Steps to Airport Development, Utility Airplane Council, Aerospace Industries Association of America, 1725 de Sales St. NW, Washington, D.C. 20036.

19. Planning and Design for Rapid Airfield Construction, TM5-366, Department of the Army, U.S. Government Printing Office, November 1965.

APPENDIX

CHECK LIST FOR PLANNING

The following check list is from Reference 1 with modifications to illustrate the typical data items required for designing and planning for construction of a small airport.

I. Local Name of Site

(a) Purpose

(b) Type of aircraft to be served

II. Location

(a) Coordinates: Latitude, Longitude.

(b) Elevation.

(c) Section of township.

(d) Relation to nearest community.

(e) Relation to other airports.

(f) Other local or government required information.

III. Climatological Data

(a) Annual rainfall, frost penetration, snowfall.

(b) Prevalence of smoke, fog, flood.

(c) Prevailing winds, summer, winter.

(d) Normal maximum temperature of hottest month.

(e) Source of meteorological data.

(f) Unusual weather conditions.

IV. Preliminary Design Data

(a) Runway size

(b) Percentage wind coverage

(c) Additional runway planned.

(d) Taxiway systems.

(e) Others.

V. Site Clearing

(a) On site acreage.

(b) Approach area acreage.

(c) Other obstructions.

VI. Soil Conditions

(a) Penetrometer index.

(b) Other soil test or sampling.

(c) Estimate depth of water table.

(d) Features (stony, swampy, surface cover, etc.)

VII. Drainage

(a) Natural drainage courses.

(b) Draining acreage.

(c) Estimated runoff.

(d) Drainage structure.

VIII. Grading

(a) Estimated excavation (cut and fill).

(b) Borrow material.

IX. Soil Stabilization

(a) Stabilization mixture.

(b) Estimated volume.

X. Pavement

(a) Compaction of subgrade.

(b) Subbase.

(c) Base course.

(d) Wear surface.

(e) Access provisions for paving.

XI. Turfing

(a) Specie.

(b) Areas.

XII. Airfield Lighting

(a) Type of lighting.

(b) Other visual aids.

(c) Obstruction lighting.

XIII. Utilities

(a) Water supply source.

(b) Sewerage-disposal system.

(c) Telephone.

(d) Electric power.

(e) Gas supply.

XIV. Cost Estimate

(a) Clearing, on site.

(b) Clearing, off site.

(c) Obstruction removal.

(d) Unclassified excavation.

(e) Borrow.

(f) Drainage.

(g) Surface treatment or pavement.

Airport
Roads

(h) Turfing

(i) Lighting

Runway, taxiway, apron, beacon
Visual aids
Obstruction

(j) Utilities

Water
Sewerage
Others

(k) Miscellaneous

Fencing
Runway marking
Segment circle and wind cone
Others