PN-AAN-029
ISN = 29593

CATIE
CENTRO AGRONOMICO TROPICAL DE INVESTIGACION Y ENSEÑANZA
Program of Annual Crops

AN ECOLOGICAL SYSTEMS CONCEPTUAL FRAMEWORK FOR AGRICULTURAL RESEARCH AND DEVELOPMENT

Robert D. Hart

Presented at a Iowa State University-CATIE-IICA-Seminar on Agricultural Production System Research.

Turrialba, Costa Rica
February, 1979

AN ECOLOGICAL SYSTEMS CONCEPTUAL FRAMEWORK FOR AGRICULTURAL RESEARCH AND DEVELOPMENT

Robert D. Hart*

Traditional agricultural disciplines have evolved by dividing the agricultural production process into smaller and smaller units. Some of these divisions are structural, such as the separation of plants and animals, while others, such as the difference between the disciplines of physiology and economics, are based on functional characteristics. When multidisciplinary teams are formed to study a unit that encompasses structural and functional components and processes that have traditionally been assigned to different disciplines, integration of the team is often hindered by the lack of a common conceptual framework.

A conceptual framework must be more than a set of definitions agreed upon by a multi-disciplinary team. The framework should function as an integrative tool that allows all team members to understand the relationship between disciplines, as well as the relationship between specific disciplines and the larger unit that is the subject of study.

The decision to form a multi-disciplinary team often occurs after it has been demonstrated that different disciplines working separately have been less successful than expected. This has occurred in tropical agricultural research and development programs. Research scientists have recently recognized the necessity of working with units larger than the individual crop or with specific processes such as economic transactions. As a result, cropping system and farming system multi-disciplinary teams are being formed

* Ph. D., Production Systems Agronomist, CATIE, Turrialba, Costa Rica.

in many tropical agricultural research institutions. The conceptual frameworks used by existing teams have usually developed by an evolutionary process as the team attempts to conceptualize the unit being studied and integrate different disciplines.

The primary purpose of this paper is to describe a general agricultural systems conceptual framework that can serve as a starting point for a multidisciplinary team. A conceptual framework is a model, and like any model, represents a simplification of reality. Simplification involves assumptions, which in effect are hypotheses as to the structure and function of the unit under study. The validity of these assumptions and the potential of the conceptual framework can best be evaluated by applying the model to reality and analyzing the results. In this paper I describe an ecological systems conceptual framework and apply this model to the reality of the agricultural production process of Central American small farmers.

The ecological systems model

A system is an arrangement of components that function as a unit. Biological and physical systems are open systems, i.e., they interact with their environments, processing inputs to produce outputs. The systems approach was pioneered in biology by Smuts with his introduction of the concept of Holism in 1926 (Becht, 1974). In the early 1930's, von Bertalanffy (1968) formulated what he defined as a General Systems Theory.

The systems approach has been applied to all biological disciplines, but is probably most associated with ecology. In 1935 Tansley proposed the term Ecosystem (Evans, 1956). The concept has been developed by many others,

such as in the classic papers on trophic levels by Lindeman (1942) and energy flow through ecosystems by H.T. Odum (1957). Development of the ecosystem concept into a larger ecological systems concept is probably most associated with E.P. Odum (1971) and his Fundamentals of Ecology text and the energy circuit approach of H.T. Odum (1971).

E.P. Odum defines an ecosystem as "any unit that includes all the organisms in a given area interacting with the physical environment so that a flow of energy leads to clearly defined trophic structure, biotic diversity, and macerial cycles within the system". The flow of energy and cycling of materials associated with ecosystems can be found in other ecological systems both larger and smaller than ecosystems. In systems terminology, ecosystems are subsystems of other systems as well as composed of subsystems. The conceptual framework of ecology is based on the assumption that there exists a series of hierarchically interacting systems from the universe to the smallest subatomic particle.

Ecological studies are usually applied to only one or two levels of the universe-to-subatomic particle hierarchy. Ecosystems, communities, and populations are probably the most common units studied in ecology. Each hierarchical level is conceptualized as a system composed of a set of subsystems. Interaction between two subsystems of the same system can be defined as horizontal system integration. Horizontal system interaction ca be superimposed upon the vertical system interaction implied by the univers to-subatomic hierarchy. This vertical and horizontal ecological systems model can also be applied to the agricultural production process.

Hierarchical agricultural systems

If the hierarchical ecological systems conceptual framework is applied to an agricultural production process, a set of hierarchically related agricultural systems emerge (Fig. 1). As in the case of the ecological systems framework, agricultural systems exhibit not only vertical hierarchical system interaction, but also horizontal system interaction. Each hierarchical level is a functioning set of subsystems with the outputs of some subsystems acting as inputs to others. While it is possible to describe a global level agricultural system, from the point of view of agricultural research and development, the geographic region is probably the largest unit of interest.

A regional agricultural system includes all the farms in the geographic region; the marketing, credit and information centers; and the infra-structure that ties these regional subsystems together. A region can be analized as a system with materials, energy, money and information flowing into and out of the region and between subsystems within the region. From an agricultural research point of view the farms within the region are the most important subsystems and form the next lower hierarchical level under the region.

A farm is also a system made up of subsystems. A farm system can be viewed conceptually as a set of spatially definable areas in which either crops, animal or both are produced, and a homestead area where the farm house is located. The crop or animal production areas form units, analogous to the ecosystem unit in ecology, and can be defined as agroecosystems. The farm house area in which the farm family is fed and clothed and the economic transactions and management decisions that occur on a farm can be combined

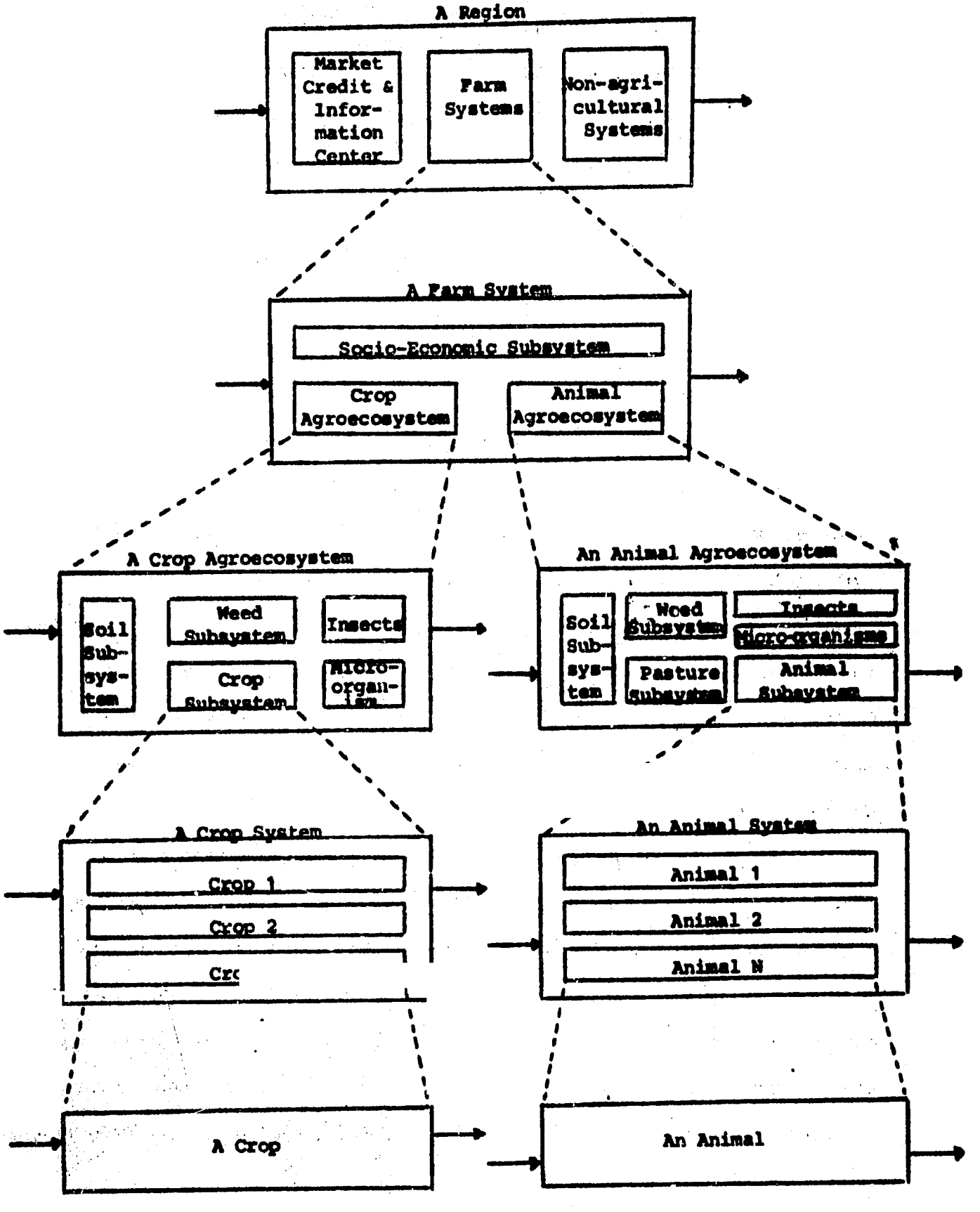

Figure 1. Hierarchical relationship between agricultural systems.

to form a socio-economic subsystem of the farm system. The socio-economic subsystem and the agroecosystems interact to form a farm system. If agricultural research is of primary concern the agroecosystems of a farm system are the most logical next-lower hierarchical level to be analyzed in more detail.

An agroecosystem is also a system made up of subsystems. As in the case of natural ecosystems, it is composed of a biotic community of plants, animals and micro-organisms and the physical environment in which the community functions. Energy flows between trophic levels and materials are cycled. An agroecosystem differs from a natural ecosystem in that at least one plant or animal population is of agricultural value and that man plays an important management role. Soil, crops, weeds, insects and micro-organisms can be defined as subsystems of crop-dominated agroecosystems. In a domesticated animal-dominated agroecosystem, soils, pasture, weeds, insects, micro-organisms, and domesticated animals make up the subsystems that function as a unit in the agroecosystem. Agronomic research has been done on all of these subsystems, but crop systems and animal systems have received the most attention.

A crop system is an arrangement of crop populations that process energy (solar radiation) and material inputs (soil nutrients, water) to produce outputs, (crop yield). The crop population can be arranged both spatially (planting distances) and chronologically (date of planting). When more than one crop species are combined in space and time, the resulting assemblage can be exceedingly complex. The individual crop species are subsystems of the crop system and make up the next hierarchical level under the crop system.

The individual crops can also be subdivided into hierarchically lower subsystems as physiological processes. In agronomy considerable attention has been given to this hierarchical level with the recent emphasis on the study of crop architecture and crop genetic systems as part of crop breeding programs.

A domesticated animal system is an arrangement of animal populations that processes energy and material inputs (pasture, feed supplements, etc.) to produce outputs (meat, or animal products). An animal system is on the same hierarchical level as a crop system. Animal populations made up of individual animals composed of interrelated physiological systems form the next-lower hierarchical level.

In applying the agricultural systems conceptual framework to a specific case, it is not always necessary or practical to use the entire hierarchy. Emphasis can be placed at one level, as for example in the case of a cropping systems project. In principal, however, it will always be necessary to study at least three levels: the unit of interest, and the next higher and next lower levels. The next higher system must be studied in order to measure the inputs into the system, and the next lower level must be studied in order to understand how the system functions. In the case of a cropping systems project, activities will need to be applied to the agroecosystem, crop system, and crop levels. A farming system project must study regions, farm systems and agroecosystems.

The first step in either a region, farm, agroecosystem, crop or animal system study is the construction of a qualitative model of the unit under consideration. In the context of this framework, model building involves

identifying the inputs and outputs of the system of interest, the subsystems of the system, and the circuitry conecting these subsystems. The next step is to begin to quantify the relationships hypothesized in the qualitative model, and to construct a quantitative model of the system. The precision required depends upon how the model will be used.

The qualitative models that would be developed by a multi-disciplinary team if the hierarchical agricultural systems model were used, would vary with the ecological and socio-economic conditions of a specific region, farm, agroecosystem, or crop or animal system. However, these systems have general inherent characteristics that make it possible to outline general qualitative models for each level of the hierarchy. I have assumed that these models would be used for research and development purposes.

Regional Development

Figure 2 is a qualitative model of a regional system. The major input and outputs into a region can be classified into energy, materials, money, and information. The first step in any regional study would be to identify these inputs and outputs. Energy, materials, money and information also flow between the subsystem of a region. In the model, agricultural subsystems of a region are defined as market, credit and information centers, and the different types of farm systems within the region. In a specific regional development study these farms systems would be identified and classified. This same information would, of course, also be necessary for a farm system study, since the first step in a farm system study would be the selection of a specific farm system type, and the region would have to be studied in

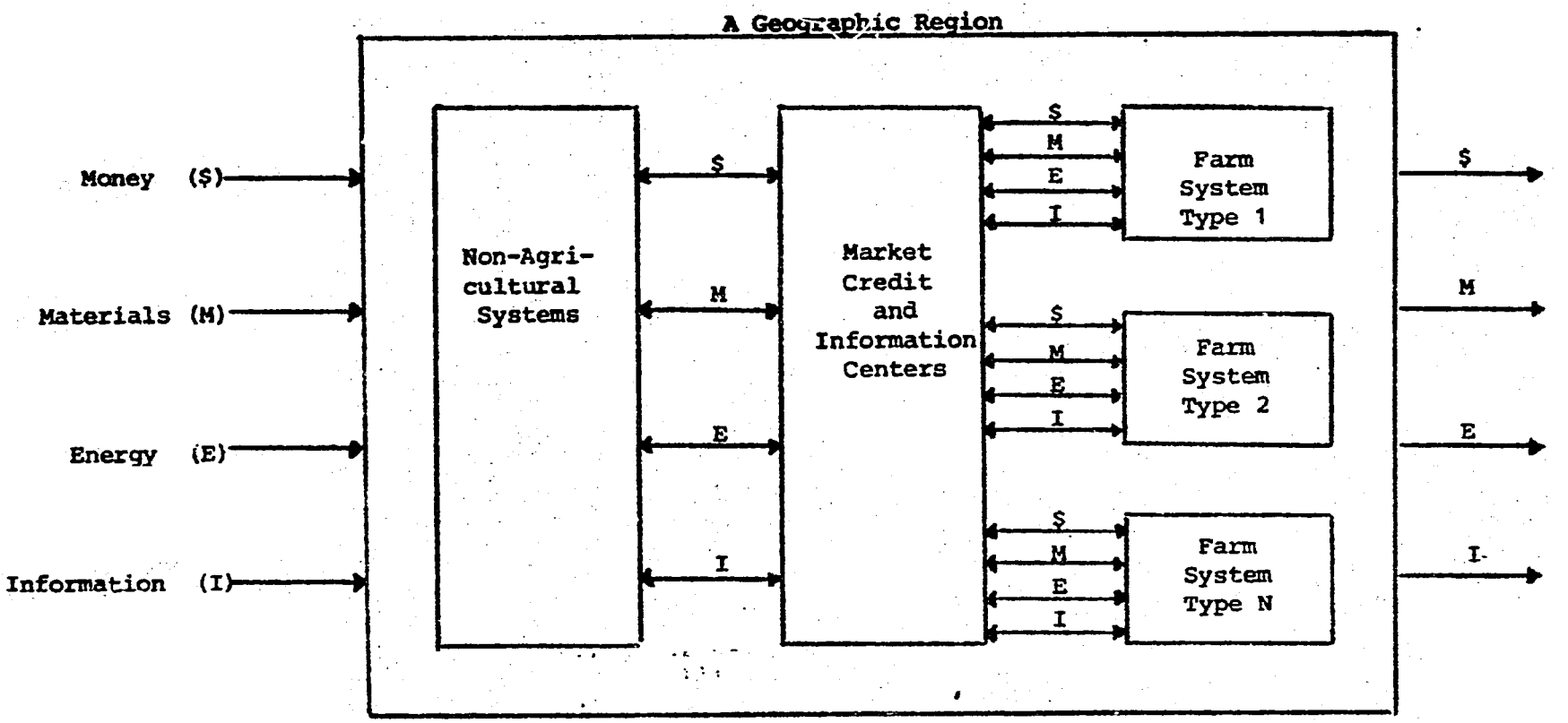

Figure 2. Flow of money, materials, energy and information through a geographic region.

order to identify the inputs and outputs into the farm system.

Farm System Research

Figure 3 is a qualitative model of a farm system. The farm is divided into a socio-economic subsystem and agroecosystems. The inputs and outputs into a farm system can also be classified into energy, materials, money and information. The inputs and outputs into the agroecosystems of the farm system can be grouped into information, energy, and materials categories. Information enters an agroecosystem in the sense that human, animal, or machine energy enters an agroecosystem as part of a management plan. Farm system research requires not only the construction of a qualitative model describing these relationships, but also a quantitative model where real numbers are assigned to the farm system inputs and outputs and the flows between the subsystems of the farm. The primary objective of farm system research would be to use the model to identify possible modifications of an existing farm system or to design a new farm system. The constraints upon this design process, such as labor availability, nutrition requirements of the family, etc. would be determined before the generation of a new farm systems begins. The regional system and the socio-economic subsystem of the farm would be studied to identify socio-economic restraints, and the agroecosystems would be studied to identify the physical and biological constraints.

Agroecosystem Research

Figure 4 is a qualitative model of a crop agroecosystem. In the diagram, physical and biological sources of inputs such as solar radiation, crop seed herbivores, etc, are shown entering the system on the left side; agricultural

Best Available Document

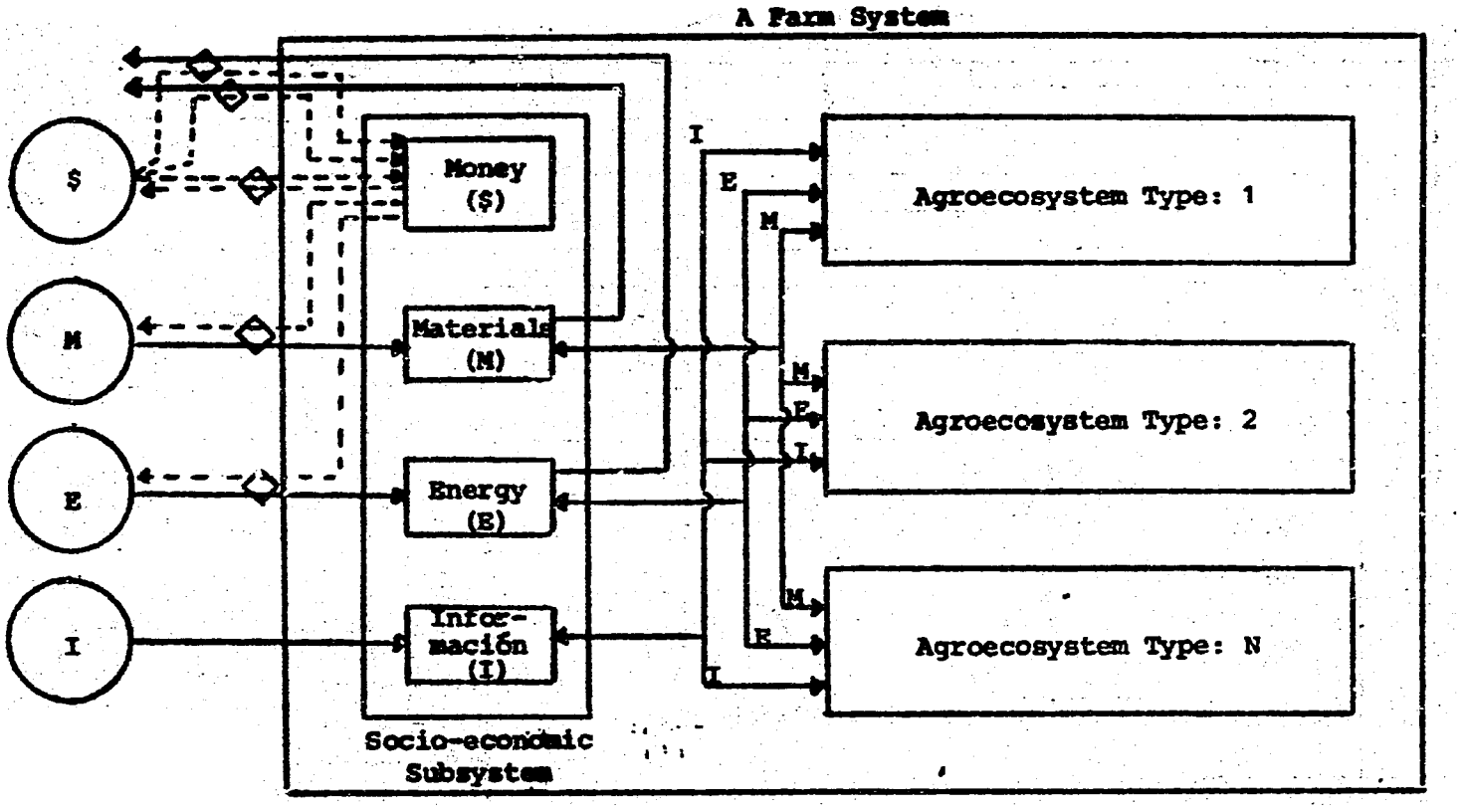

Figure 3. Flow of money, materials, energy and information through a Farm System.

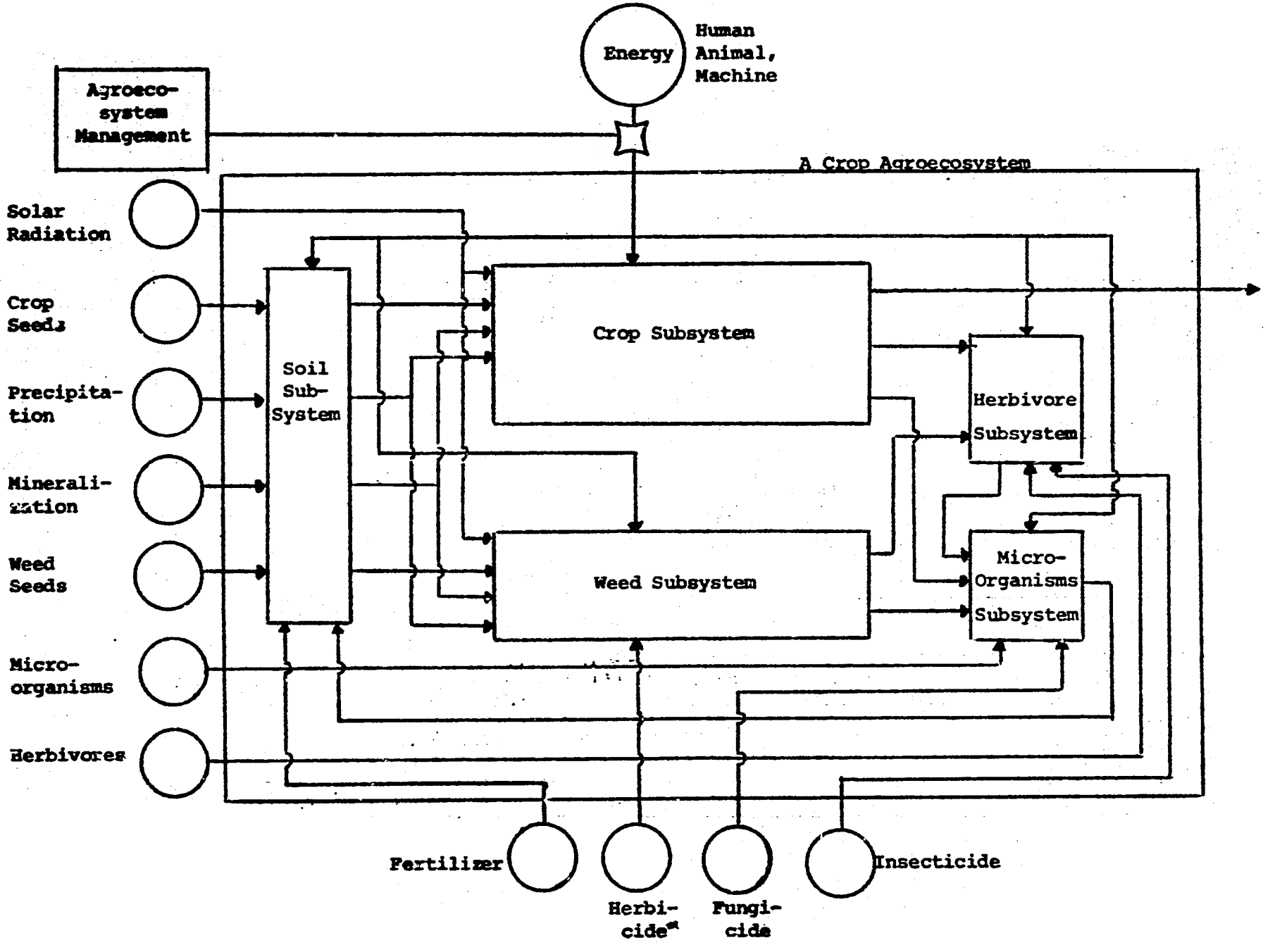

Figure 4. Flow of materials and energy through an agroecosystem with a crop subsystem.

chemicals such as fertilizer, herbicide, etc. enter from the bottom; and human, animal, and machine energy enter from the top as determined by an agroecosystem management plan. The agroecosystem is an extremely important research unit, primarily because it is the unit that the farmer manages. While the performance of the crop system within the agroecosystem is the key to agricultural production, this performance is regulated by managing the agroecosystem. The Agroecosystem Management Plan is a convenient information package for transfering alternative technology to a farmer.

The subsystems of crop agroecosystems are soil, weed, herbivore, micro-organism, and crop systems. Water and nutrients are outputs of the soil system and, along with solar radiation form potential inputs that are competed for by crops and weeds. Crops and weeds process these inputs to produce biomass that is an input to herbivores and micro-organisms that in turn recycle nutrients to the soil subsystem for subsequent uptake by crops and weeds. As in any ecosystem, the cycling of materiales is powered by a flow of energy through the system. From an agronomic perspective the output of economic crop biomass (yield) is the most important output from the system.

Agroecosystem research has the ultimate objective of modifying either the management of the agroecosystem, the crop system, or both. Research with this objective will require experiments with analytical objectives in order to understand how the system functions (build qualitative and sometimes quantitative models), as well as experiments comparing potential modifications with existing agroecosystems in specific areas.

Figure 5 is a qualitative model of an animal agroecosystem. Ecologically, animal agroecosystems and crop agroecosystems are very similar. In animal agroecosystems, natural herbivores are replaced by domesticated animals and

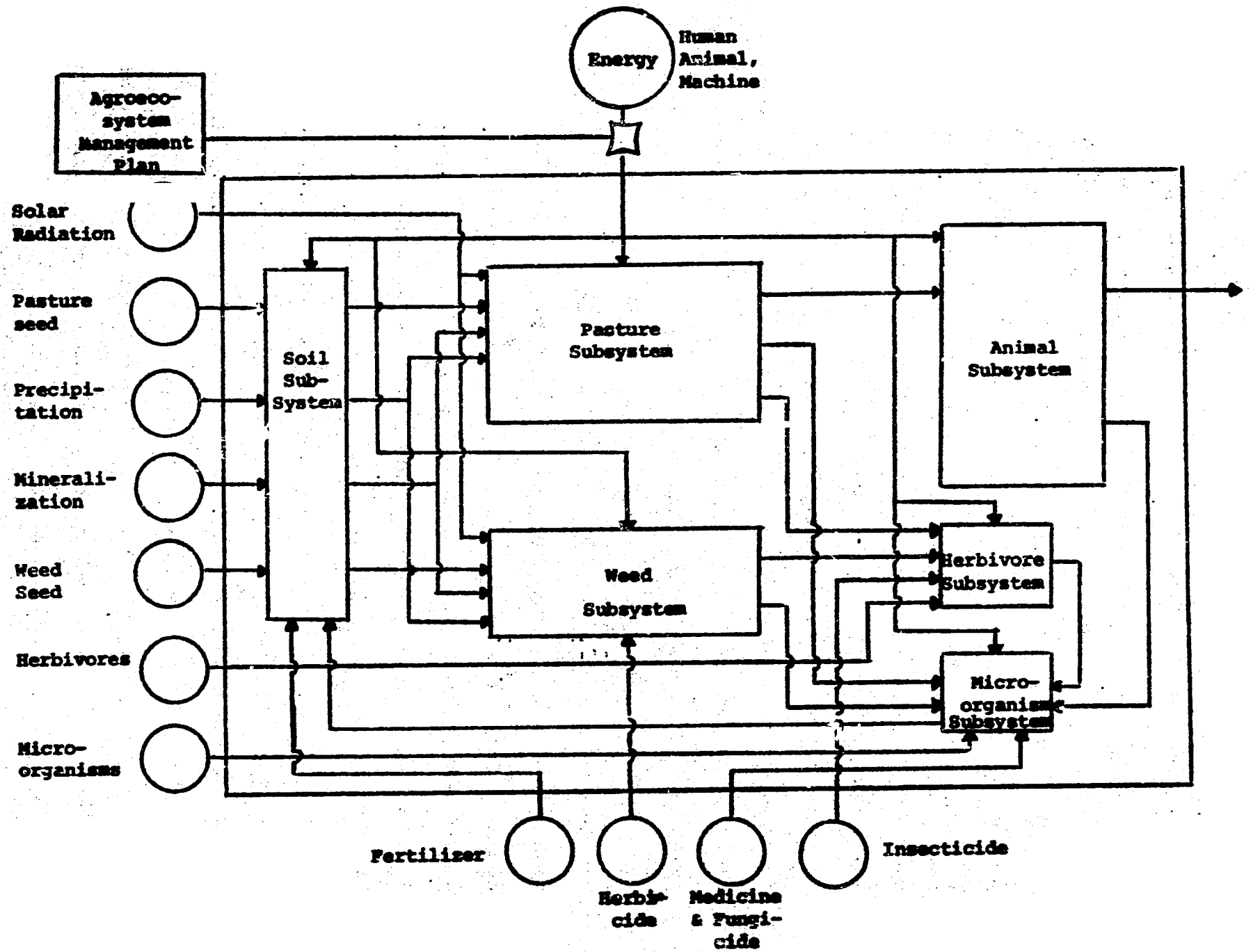

Figure 5. Flow of materials and energy through an agroecosystem with an animal subsystem.

pasture is substituted for natural plants, while in a crop agroecosystem only the natural plants are replaced. This substitution is not 100% effective and weeds and natural herbivores are still part of agroecosystems. Animal and crop agroecosystems are sufficiently similar so that the same methodology suggested for crop agroecosystems can be followed with animal agroecosystems. Animal agroecosystems can be improved by modifying the management and inputs into the agroecosystem or modifying the animal subsystem.

Crop System and Animal System Research

Figure 6 is a qualitative model of a crop system and an animal system. Crop or animal system research need not always be done while the systems function as subsystems of an agroecosystem, but research at the agroecosystem level will definitely be necessary to define the crop or animal system properties that can be studied in isolation.

A crop system can be modified by changing the spatial arrangement between crop populations (planting distances), the chronological arrangement of the crop populations (time of planting), or the crop components (either variety or species) of the system, or any combination of these modifications. One crop can be substituted for another (substitution), crop species can be added (diversification), populations of existing crops increased (intensification), or substitution, diversification, and intensification can be combined.

In the crop system diagram (Figure 6), crop populations (1,2,..N) are arranged within a space x time dimension. This crop arrangement forms a pattern, and is sometimes defined as a cropping pattern. Ideal cropping patterns are determined by input functions (e.g. rainfall distribution) and the available crop components. If these input functions and available genetic

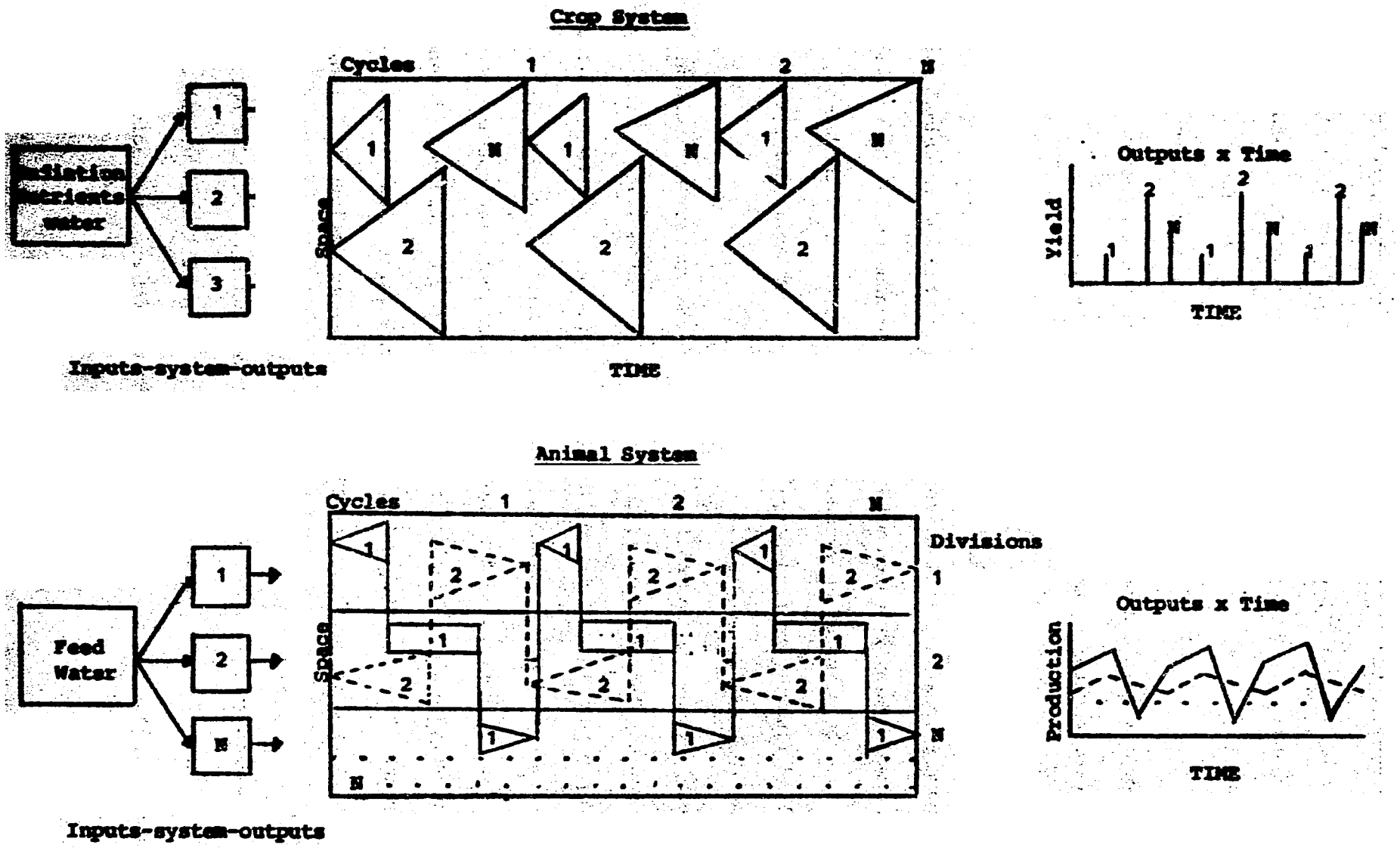

Figure 6. Crop and animal systems as spatial and chronological arrangements of crop and animal populations, respectively.

material remain constant for a sufficient length of time, farmers usually evolve cropping patterns that are in equilibrium with these constraints. Unless new varieties of crops or new inputs are made available it is highly unlikely that a better cropping pattern can be found than the pattern already evolved by farmers.

Crop system research can have short-term objectives such as the identification of better crop systems through a trial and error approach of comparing potential systems with the farmers system, or long-term objectives such as the identification of crop system design principals and an understanding of how crop systems function. The long term objectives are, of course, only long term in the sense that the period of time before the first practical recommendation is available will be quite long; ultimately, an understanding of how the system functions is the fastest way to produce viable recommendations.

Animal systems are spatial and cronological arrangements of animal populations. The animal populations in an animal system are usually different age and sex classes of the same species, although in some cases different species, such as pigs and chickens, occupy the same space and compete for some of the same resources. In the animal system diagram (Figure 6) the space dimension is divided into N subareas. Some animal populations are rotated between subareas; others are confined in one area. All animal populations interact in either space or time with at least one other populati The arrangement of animal populations form a pattern analogous to the cropping pattern of a crop system.

An animal system can be modified by changing the spatial or chronological

arrangement of the animal population, the animal components of the system, or both. The animal populations can change through substitution, diversification, intensification, or combinations of these modifications.

The agricultural systems framework as a team integrator

Traditional agricultural disciplines can be divided into horizontal one-level disciplines and vertical disciplines that cross hierarchical levels. Examples of the former are crop genetics, soil fertility and entomology. Economics and ecology are examples of vertical disciplines. Economics concentrates primarily on vertical relationships such as the chain from the farm to the market to the consumers, while ecology encompasses both vertical and horizontal systems relationships.

A multidisciplinary team should include both vertical and horizontal disciplines. If the entire agricultural system hierarchy from a region to the crop or animal level is under study, integration of the regional and farm systems study can probably best be done by an economist, as almost all flows of energy and materials between these levels are associated with a flow of money. Farm system to crop or animal integration should be done by an ecologist since the interaction of physical and biological factors dominate these systems. Horizontal-discipline scientists should be assigned responsibilities within hierarchical levels. If the methodology of first building qualitative models and then proceeding to quantify relationships is followed, all disciplines should concur that the qualitative model represents a first approximation of reality. Different disciplines can then be assigned the responsibility of quantifying different qualitative relationships.

The agricultural systems hierarchical conceptual model described in this

paper is only a preliminary framework for a multidisciplinary team. As relationships between systems are better understood the conceptual framework will need to be modified to reflect the characteristics of the phenomenon under study.

Literature Cited

1. Becht, G. 1974. Systems Theory, the Key to Holism and Reductionism. Bioscience 24(10) 596-579.

2. Evans, F.C. 1956. Ecosystems as the basic unit in Ecology. Science 123:1127-1128.

3. Lindeman, R.L. 1942. The Trophic-Dynamic Aspect of Ecology. Ecology 23:399-418.

4. Odum, E.P. 1971. Fundamentals of Ecology. Washington, D.C., Saunders. 574 p.

5. Odum, H.T. 1957. Trophic Structure and Productivity of Silver Springs, Florida. Ecological Monographs 27:55-112.

6. Odum, H.T. 1971. Environment, Power, and Society. New York, Wiley. 331 p.

7. von Bertalanffy, L. 1968. General Systems Theory. George Braziller, Inc. New York. 295 p.

FITO 898-79
agosto, 1979

PROJECT NUMBER:
PROCESS: ACTION: DATES: INITIALS:
CATALOGUE
ABSTRACT
INDEX X
RAN DD X
COMMENTS
DISPOSITION