PN-AAM-710
ISN = 28109
263001/62

EWUP TECHNICAL REPORT NO. 22

THE HYDRAULIC DESIGN OF MESQA 10

AN EGYPTIAN IRRIGATION CANAL

By

W. O. Ree Mona El-Kady

J. W. Wolfe Wadie Fahim

AFD/NE-C-1351

November 1982

EGYPT WATER USE AND MANAGEMENT PROJECT

22 El Galaa St., Bulak, Cairo, Egypt

THE HYDRAULIC DESIGN OF MESQA 10

AN EGYPTIAN IRRIGATION CANAL

TECHNICAL REPORT NO. 22

Prepared under support of

WATER DISTRIBUTION RESEARCH INSTITUTE, WATER RESEARCH CENTER

MINISTRY OF IRRIGATION, GOVERNMENT OF EGYPT

Contracting agencies

Colorado State University
Engineering Research Center
Ft. Collins, Colorado 80523
USA

Consortium for International
Development
5151 E. Broadway, Ste., 1500
Tucson, Arizona 85711 USA

All reported opinions, conclusions or
recommendations are those of the writers
and not those of the supporting or contracting agencies.

Abstract

New mesqa 10 replaces the present earth mesqa which delivers water below the level of the adjacent land, an area of about 57 Feddans (24 ha). It is a rectangular channel 0.71 meters wide and 0.60 meters deep built of concrete blocks. The concrete floor of the mesqa lies on the surface of the left bank of the old mesqa with but slight cut or fill beneath it, so it will have a uniform slope of 0.0001.

The water level in the new mesqa is high enough to permit gravity flow to the marwas and thus eliminate the eight saqias which the old mesqa required. The capacity of the new mesqa is 60 liters per second, a flow sufficient to meet peak season water demand. Water is supplied by pumping from the Beni Magdul canal at the head of the mesqa.

The design started with a study of the land elevations to locate the highest point.

The depth of water on the land, the head losses through a cut-throat flume and a pipe turnout were added to the land elevation to determine the required water level in the mesqa. Water suface profiles were calculated by back water curve methods to establish the depths in the mesqa. A program for the HP 97 calculator was prepared to determine the distribtuion of the total flow among several open turnouts.

75 pages, 5 Table, 12 Figures

مستخلـــــــص

تحل مسقى ١٠ الجديدة محل المسقى الحالية الترابية التى توفر المياه تحت مستوى الأرض المجاورة وهى مساحة ٥٧ فدانا تقريبا (٢٤ هكتـــــار). ومسقى ١٠ الجديدة عبارة عن مجرى مستطيل عرضه ٧١ر٠ وعمقه ٦٠ر٠ م مبنـــى من الطوب الخرسانى . وتقع الأرضية الخرسانية للمسقى على سطح الجسر الايسر للمسقى القديمة مع وجود قليل من الحفر أو الردم تحتها حتى يكون الجسر منتظم (٠٠٠١ر٠)

ويكون مستوى المياه فى المسقى الجديدة عاليا بما فيه الكفايـــة للانسياب الطبيعى الى المراوى (الرى بالراحة) وبذلك يسمح بالغاء الثمانية سواقى التى كانت المسقى القديمة تحتاجها . وتبلغ سعه المسقى الجديـــدة ٦٠ لتر / الثانية ، مما يوفر انسيابا كافيا لسد احتياج المياه فى موســم اقصى الاحتياجات . هذا وتوفر المياه بواسطة الضخ من ترعة بنى مجدول عند فم المسقـــى

وقد بدأ التصميم بدراسة ارتفاعات الأرض لتحديد اعلى نقطة

ولكى يتحدد مستوى المياه المطلوب فى المسقى كان من الضرورى تحديد عمق المياه وكمية الفاقد عند المأخذ من خلال العبارة ذات العنق المقطـــوع Cut-throat flume وفتحة الرى Pipe turnout . وقد تم حســاب خط سطح المياه بواسطة منحنى الرمو لتحديد الأعماق فى المسقى . وقد تم ايضا وضع برنامج للحاسب الآلى HP- 97 لتحديد توزيع الانسياب الكلى على فتحات متعددة .

٧٥صفحة ٥ جـداول ١٣ شكـــل

TABLE OF CONTENTS

Abstract (English&Arabic) i
Table of Contents iii
List of Tables iv
List of Figures v
Acknowledgements vi
Introduction 1
Description of the Present Mesqa 3
Water Requirement 3
The New Mesqa 5
Channel Design 5
Turnout Design 8
Full Pipe Flow 9
Part Full Flow 13
Setting Elevation of the Mesqa 16
The Pump Station 21
The Mesqa Crossing 26
The Mesqa Profile 26
The Emergency Weir 30
Flow Distribution For Multiple Turnout Operation 30
Appendix A 33
Appendix B 37
Appendix C 41
Appendix D 45
Appendix E 49

LIST OF TABLES

Table 1. Values of n to be used with the Manning Equation 6

Table 2. A comparison of Capacities of Pipe Turnouts as Determined by Various Researchers..... 13

Table 3. Calculated on-off times 25

Table 4. Water Surface Elevations in Mesqa 26

Table 5. Mesqa 10- Flow Distribution Through Turnouts. 31

LIST OF FIGURES

Fig. 1. The Area Served By Mesqa 10 4

Fig. 2 The Mesqa Gross-Section 7

Fig. 3. Pipe Turnout In Full Pipe Flow 10

Fig. 4. Discharge of Pipe Turnouts Under Full Pipe Flow 11

Fig. 5. Pipe Turnout With Free Out Fall 14

Fig. 6 Head Requirements For Turnouts..... 17

Fig. 7. Ground Elevations In The Vicinity of Mesqa 10 20

Fig. 8. Mesqa Cross -Section At Station 500 22

Fig. 9. Plan View of Pump Station and Weirs Proposed For Mesqa 10 23

Fig. 10. Gross-Section Of Pump Station and Weirs 24

Fig. 11. The Mesqa Crossing 27

Fig. 12. The Mesqa Profile..... 28

Fig. 13.A. Water Surface Profile For All Flow (.06 M^3 / S) Through Turnout at Station 500 29

Fig. 13.B. Water Surface Profile For All Flow (.06 M^3 / S) Through Turnout At Station 50 29

ACKNOWLEDGEMENTS

The authors wish to express their thanks and appreciation for the contributions made to this paper by the staff of the Egypt Water Use and Management Project, and to the field teams at Mansuriya, Kafr El-Sheikh and El-Minya.

The Project is funded jointly by the Arab Republic of Egypt, and by the United States Agency for International Development. The United States Agency for International Development in Egypt is under the directorship of Mr. Michael P. W. Stone. Mr. Robert Fulton is the United States Agency for International Development Project Officer for the Egypt Water Use and Management Project.

The Egypt Water Use and Management Project is implemented under the auspices of the Ministry of Irrigation's Water Management and Irrigation Technologies Research Institute and in collaboration with both the Ministry of Irrigation and the Ministry of Agriculture through the Soil and Water Research Institute and the Agriculture Economics Institute, which provide the Project with personnel and services.

The Consortium for International Development, with executive offices in Tucson, Arizona, is the United States Agency for International Development contractor for the Project. American Project personnel are drawn from the faculties of Colorado State University, the lead American university taking part in the Project, Oregon State University, New Mexico State University, and Montana State University. The Project Director is Dr. Hassan Wahby and the Project Technical Director is Dr. Eugene Quenemoen. Dr. E. V. Richardson is the Campus Project Coordinator at Colorado State University.

The Hydraulic Design of Mesqa 10, An Egyptian Irrigation Canal

By

W. O. Ree, Mona El Kady, J. W. Wolfe,
And Wadie Fahim Mankarious

INTRODUCTION

This paper describes the design of a raised, private irrigation canal (mesqa), which replaces an existing, below grade, canal.

The private irrigation canals receive water from the extensive network of government canals which in Egypt have a total length of 30309.2 km. The Ministry of Irrigation is responsible for the construction and maintenance of the government canals and must maintain an adequate and clean cross section in them. It also reviews and authorizes all outlets to the priviate canals. The operation of the private canals is the responsibility of the adjoining land owners who must maintain the canals and see that each farmer receives his share of water depending on the area of land he owns. If the farmers fail to clean the mesqa, then, according to Egyptian law, the government has the right to clean the canal and charge for the service. Because farmers fail to clean the private irrigation canals these cleanings are a big problem for the irrigation authorities. Some of the factors in the problem are:

1. The farmers in most case are not able to maintain the mesqas as well as the government. As a result, farmers on the lower reaches may suffer from a shortage of water.

2. Farmer organizations to provide an irrigation schedule which would insure water at the proper time for each farmer and to maintain the mesqas are lacking. Failure to provide water could provoke serious trouble because farmers would fight desperately for water. Without it, they cannot survive.

3. The Egyptian irrigation system requires water-lifting devices for each farmer or a small group of farmers (pump, saqia, or tambour). Thus, a number of lifting devices are relatively inefficient so far as energy consumption is concerned when compared with one device for the entire mesqa.

4. The present private mesqas lose 13 to 20% of the water to seepage and to spillage*.

These problem factors indicate the nature of desirable improvement, which include reduced maintenance requirements, elimination of the various water-lifting devices, reduction of seepage loss, and better control and scheduling of water to avoid spillage losses.

The Egypt Water Use and Management Project (EWUP) is working to improve on-farm water management. It seeks alternatives for better water control and delivery systems within the limits of reasonable economic feasibility. In the case of mesqa 10, an open conduit was chosen for the new canal. An economic study of the proposed new mesqa states "the interpretation of the evaluation results for mesqa 10 shows also that the raised mesqa is going to provide the proper quantity of water to the farm level to permit more efficient on-farm irrigation".[a] One reason for the choice is that the open conduit would be more acceptable to the farmers of the area. (Being able to see the water gives the farmer more trust).

The procedures used in the hydraulic design of the new canal can be used in the design of other similar canals. Thus, the authors felt that a description of the procedures used in the design of mesqa 10 would be of value to others who are confronted with similar needs. So they have assembled in this paper descriptive material and computations in sufficient detail to serve as a working tool for private irrigation canal design.

---

* Farouk Shaheen and M. Saif; Egyptian Canals Face Problems. Egypt Water Use and Management Project, Ministry of Irrigation, Government of Egypt, Cairo, ARE.

(a) Farouk Abdel Al, Gamal Ayad, and Gamal Fawzi; Pre-feasibility Study - Economic Evlatuion of Elevating Mesqa 10 at Beni Magdul. Papaer No. 2. Staff Paper, Egypt Water Use and Management Project, Ministry of Irrigation, Government of Egypt, Cairo, ARE.

The paper begins with a description of the area served by the mesqa, its size and water requirement. The design of the various components of the water control and delivery system to meet the water requirement is described. Finally, an analysis of various operating modes for the mesqa is presented. Computer programs developed during the design are placed in the Appendix.

DESCRIPTION OF THE PRESENT MESQA

Mesqa 10 is a typical Egyptian unlined, earth mesqa. It is fed by Beni Magdul Canal and serves an area of 57 feddans (24ha) with 23 fields on the right hand side and 24 fields on the left. It is about 600 meters long and terminates at the Nahia Drain. There are two sharp turns, about 90 degrees each, in the mesqa. Eight saqias pump from the mesqa into the field ditches. Figure 1 is a map of the mesqa and area served. The mesqa is the next to last on the left hand side of the Beni Magdul Canal. At times the water level is too low in the Beni Magdul Canal to provide the head for the required flow for mesqa 10. A well and pump at the downstream end of mesqa 10 then supply the needs of the area in the vicinity of the pump. Occasionally water is pumped from the nearby Nahia Drain to make up the deficit. However, the well water and especially the drain water contains more salt than the canal water does. The new mesqa will eliminate the need to use these lower quality waters.

WATER REQUIREMENT

The water requirement for the area was determined to be 60 liters per second (0.06 M^3/S). It was calculated as follows;

$$Q = \frac{Ad}{100\ E\ H\ 3600}$$

where Q = Supply rate in $M^3/5$

A = Area irrigation, M^2

E = Application efficiency

H = Hours irrigated per day

d = Consumptive use for peak day, cm

Substituting 57x 4200 for A, 1 for d, .65 for E, and 16 for H yields $Q = 0.06\ M^3/S$.

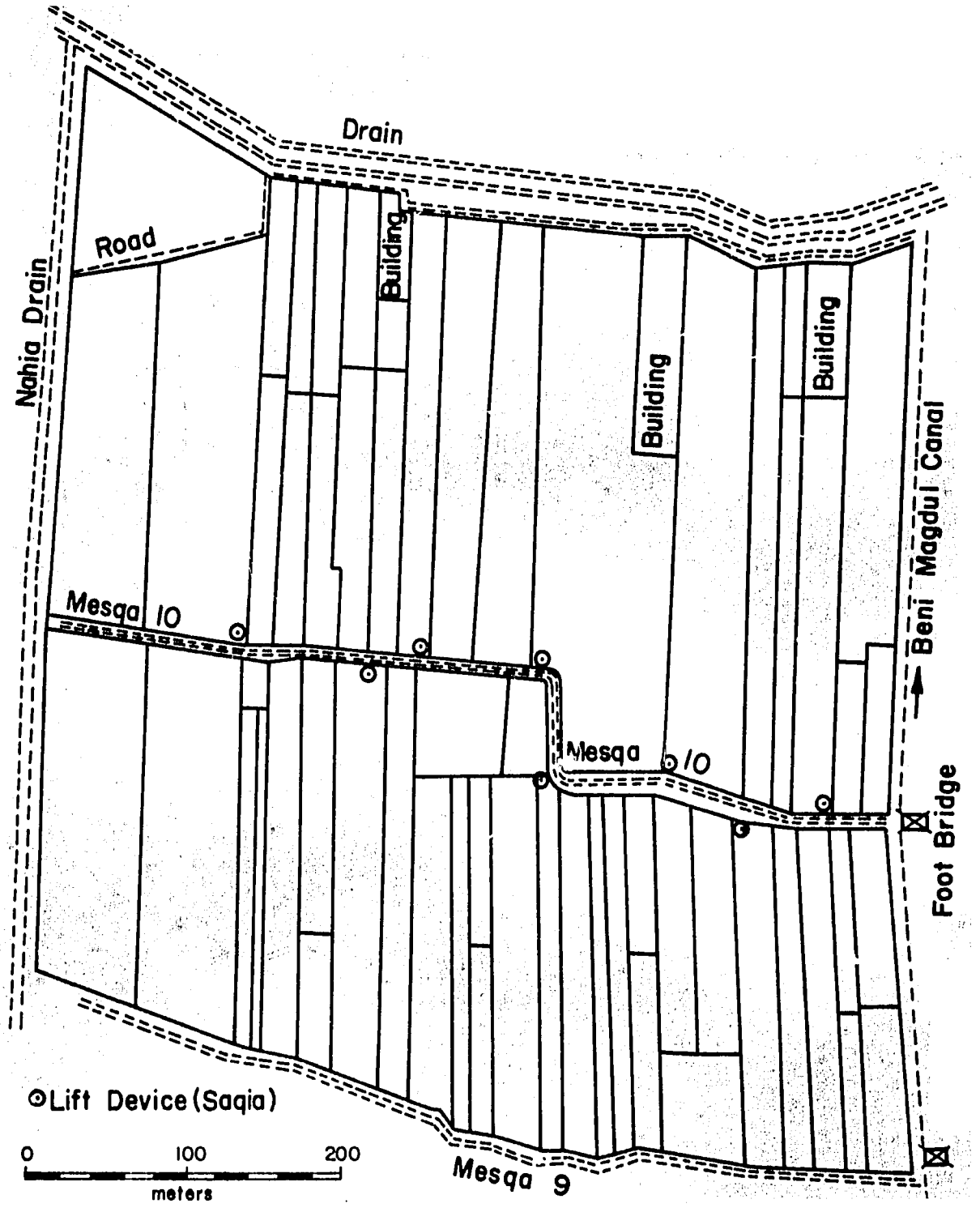

FIGURE 1. The Area Served by Mesqa 10

This rate will supply the peak daily requirement if water is applied for 16 hours. Since water is continuously available this was thought to be a realistic approach to establishing the discharge capacity for the mesqa.

THE NEW MESQA

The decisions which set the conditions for the hydraulic design were:

1. The new mesqa would be concrete or masonry channel.

2. It would parallel the old mesqa and be as close to it as possible to keep encroachment on the adjacent fields to a minimum.

3. It would be set at an elevation which would permit gravity irrigation to all parts of the area but no higher than necessary.

4. It would be supplied by pumping from the Beni Magdul Canal.

5. The turnouts would be at the present saqia locations.

6. Each turnout would be capable of delivering the full flow of 0.06 M^3/S.

7. The flow would be measured at each turnout.

8. The auxiliary pump at the lower end would be eliminated.

These conditions also led to farmer acceptance of the new mesqa. Especially helpful was the assurance that water would be available at the tail end. Thus, the farmers were willing to give the land for the new mesqa without being paid for it. Also, the farmers will establish an organization to schedule the irrigation along the mesqa and to enforce good water management.

CHANNEL DESIGN

Early in the design process, various cross sections for the channel were investigated with the object being to find the most practical section.

Some of the considerations in this investigation were:

1. Precast sections, or built in place.
2. Shape: semi-circular, trapezoidal, or rectangular.
3. Material: concrete, brick, or concrete block.

The appeals of a precast section were certainty of maintaining the design cross section and speed of construction. Disadvantages appeared to be the weight of the section required and the uncertainty of delivery date or even availability.

The decision was to build the mesqa in place with a concrete floor and with concrete block sides as shown in Figure 2. This was the best choice for this installation. The other possibilities are mentioned to remind designers to weigh the choice of section very carefully. Availability of material and construction conditions will probably govern.

The concrete blocks are 20 cm high. Three blocks would provide a channel with a total depth of 0.6 meters. Several trial calculations were made to select a slope and width for the channel. But first it was necessary to select a roughness factor for the channel. Kings Handbook* pages 7-22 suggests the following values:

Table 1. Values of n to be used with the Manning Equation

Surface	Best	Good	Fair	Bad
Brick in cement mortar	0.012	0.013	0.015*	0.017
Neat cement surfaces	0.010	0.011	0.012	0.013
Cement mortar surfaces	0.011	0.012	0.013*	0.015
Concrete-lined channels	0.012	0.014*	0.016*	0.018

* Values commonly used in design.

After a study of the Manning n values and a consideration of the need to provide for eddy losses caused by minor changes in channel alinement 0.017 was chosen as an appropriate conservative value.

---

* Handbook of Hydraulics, Ernest F. Brater and Horace Williams King, Sixth Edition, McGraw-Hill Book Co., 1976.

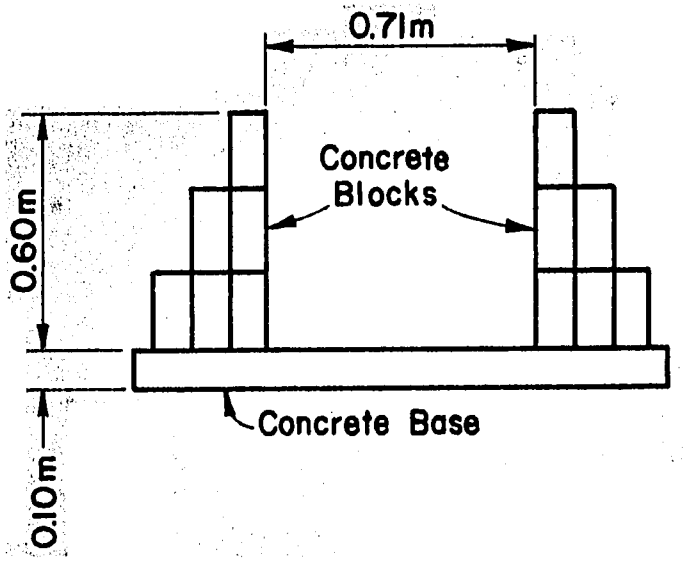

FIGURE 2. The Mesqa Cross-Section

The Manning Equation is:

$$Q = A\frac{1}{n}R^{2/3}S^{\frac{1}{2}}$$

where Q = Flow rate, M^3/S

A = Cross sectional area, M^2

R = Hydraulic radius, M, Calculated as A/P where P is wetted perimeter, M

S = Slope

The Manning Equation is most readily solved by programmable calculators using available programs. In this design a Hewlett-Packard Model 97 Calculator was used with a program written by Thomas E. Croley, II*. The program and its use are described in the Appendix. Suffice it to list here the hydraulic characteristics of the selected cross section.

Q = 0.06 M^3/S

S = .0001

W = 0.71 M

d = 0.43 M (normal flow depth)

n = 0.017

Generally, the slope of a mesqa is the land slope in the direction of flow. If this slope is too steep regulators are placed along the mesqa. However, in the case of mesqa 10 the land was nearly level. So both slope and cross section were considered together to find an economic cross section. At the same time cut or fill under the mesqa floor were kept to a minimum.

With the selection of the size and slope of the mesqa accomplished, the next step was to establish its elevation. This started with a study of the field elevations and the turnout design.

TURNOUT DESIGN

The turnouts are straight pipes of lengths to suit the various locations. They are provided with a slide gate which will be either fully opened or fully

---

* Croley, Thomas E., II, Hydrologic and Hydraulic Computations on Small Programmable Calculators, Iowa Institute of Hydraulic Research, the University of Iowa, Iowa City, Iowa.

closed. Since it is possible that a turnout would flow full with the exit submerged, or with free fall, head-discharge relationships were developed for each flow mode.

Full Pipe Flow

When the exit is submerged the turnout will flow full with the differential head, H_p, governing the flow rate. This flow condition is shown in Figure 3.

The equation for the head-discharge relation is:

$$H_p = (f\frac{\ell}{d} + 1 + K_e)\frac{V^2}{2g} \qquad (1)$$

where d = Diameter of pipe, M

f = Darcy-Weisbach friction factor

ℓ = Length of pipe, M

K_e = Entrance loss coefficient

V = Velocity in pipe, M/S

g = Acceleration of gravity, 9.81 M/S^2

The "one" within the parentheses is for the velocity head in the pipe which is considered lost at the exit.

The Darcy-Weisbach friction factor is a function of the Reynold's number of the flow and the relative roughness of the pipe. This relationship is usually portrayed graphically. An example is given in Fig. 6-4, King's Handbook*. Since the friction factor depends upon the velocity of the flow, the very quantity being sought, a trial and error type solution is required. This approach is justifiable for long pipes where friction loss is the major loss component, but for short pipes like turnouts where friction loss is but a small part of the total loss a single value for f is satisfactory. Also, in the fully turbulent flow range f becomes constant being a function of relative roughness only. For concrete pipe with wood-floated or brushed surface in good condition and with good joints, Kings Handbook (pages 6-12) gives roughness heights from .00037 M to .00018 M. For the mean of these two values, .00027, the relative roughness of good concrete pipe will range from 0.0018 for 15 cm diameter pipe to .0009 for 30 cm diameter pipe.

---

* Previously cited.

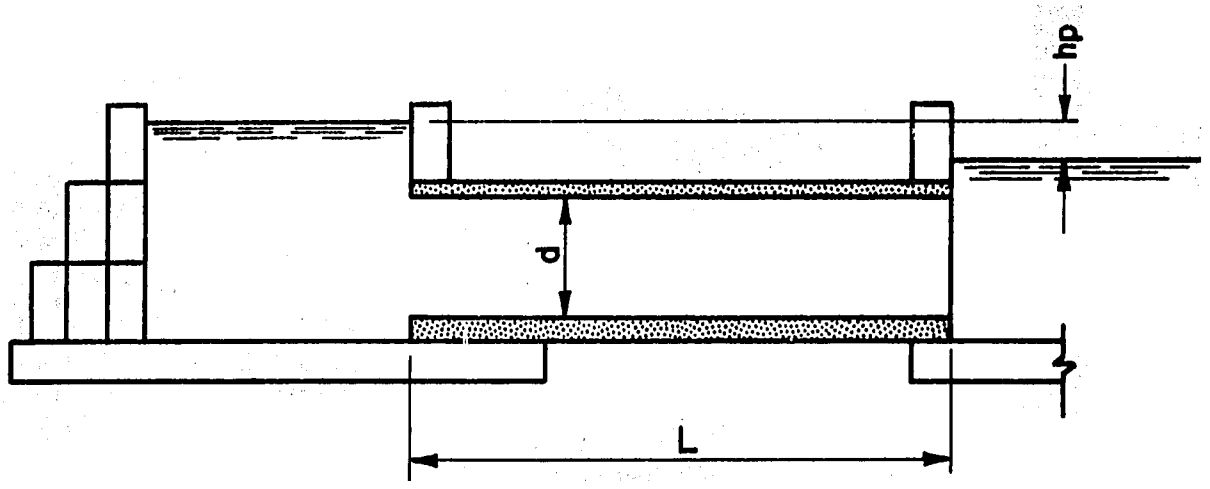

FIGURE 3. Pipe Turnout in Full Pipe Flow

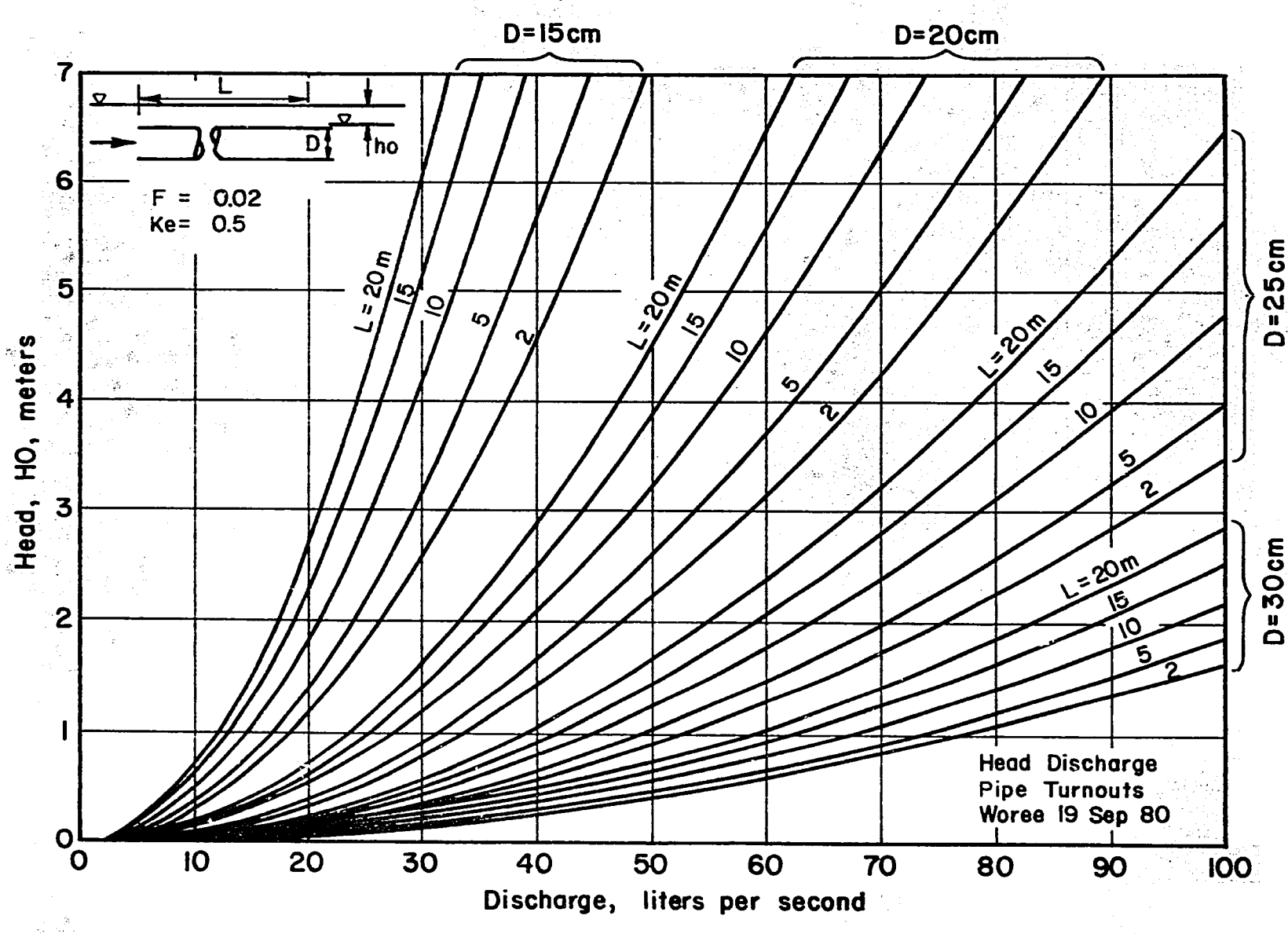

FIGURE 4. Discharge of Pipe Turnouts under Full Pipe Flow

Figure 6-4 in King's Handbook shows the f values for these pipe sizes to range from 0.023 to 0.019. A value of 0.020 was selected for the turnout design as being representative of the pipe sizes most used.

The entrance loss coefficient, K_e, was assumed to be 0.5, a typical value for flush, square edge inlets.

Substituting the values for f and K_e into equation (1) and solving for velocity yields:

$$V = \left[\frac{2g\,H_p}{.02\frac{\ell}{d} + 1 + 0.5} \right]^{\frac{1}{2}} \qquad (2)$$

The equation for discharge is obtained by multiplying equation (2) by the cross sectional area of the pipe. The equation is:

$$Q = \frac{3.4\,H_p^{\frac{1}{2}} D^2}{(.02\frac{\ell}{d} + 1.5)^{\frac{1}{2}}} \qquad (3)$$

where Q = Discharge, M^3/S

The equation for head loss is:

$$H_p = \frac{Q^2}{D^4} \frac{(.02\frac{\ell}{d} + 1.5)}{12.11} \qquad (4)$$

The solution for equation (3) is shown in Figure 4, with discharge expressed in liters per second. The HP-97 program for the solution is in the Appendix.

The discharge values calculated by equation (3) were compared with values obtained in experiments by others. A paper by El Darwish and Nadar* contains a table showing results of experiments by Depuis, Hindmarch and Butcher. The table is reproduced here together with an added column showing values calculated by equation (3). The agreement with the work of Butcher is very good and lends confidence in the choice of f and K_e values in the original derivation.

---

* El Darwish, A.A. and Nadar, M. Kotb; New Design for Fair Irrigation Water Distribution by Field Outlets.

Table 2. A Comparison of Capacities of Pipe Turnouts as Determined by Various Researchers

Diameter of pipe ms	Discharge m^3: sec. under 0.25 m head			Capacity calculated with Eq. 3*
	Depuis	Hindmarch	Butcher	
0.10	0.006	0.009	0.009	0.009
0.15	0.020	0.025	0.024	0.023
0.20	0.040	0.047	0.048	0.044
0.25	0.060	0.082	0.078	0.072
0.30	0.100	--	0.116	0.106
0.40	0.180	--	0.214	0.197
0.50	0.290	--	0.342	0.316
0.60	0.440	--	0.498	0.463
0.70	0.610	--	0.685	0.638
0.80	0.810	--	0.897	0.842
0.90	1.040	--	1.138	1.074
1.00	1.290	--	1.414	1.335

* Length, ℓ, = 10 meters.

Part Full Flow

With a raised mesqa and without a flume or other obstruction below the outlet as would be the usual case for an elevated mesqa the flow would be free. Thus for a relatively small head, the flow at outlet will be at critical depth as shown in Figure 5.

For a short length of pipe with small change in depth, V_p and V_c are approximately equal and:

$$h_w = D_c + h_f + 1.2\frac{V_c^2}{2g} \qquad (5)$$

where V_p = Velocity of flow in pipe at entrance
V_c = Velocity of flow in pipe at exit (velocity at critical depth)
h_w = Head above invert at outlet entrance
h_f = Friction head loss
D_c = Critical depth

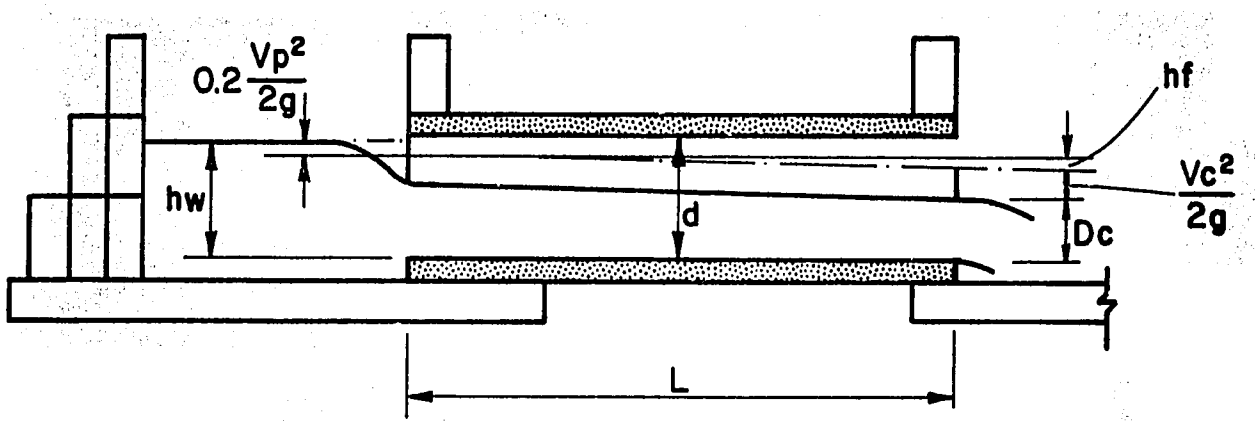

FIGURE 5. Pipe Turnout with Free Out Fall

A program for the calculation of Q and h_w is in Appendix C. The calculation of Q requires the use of table 8-10 from King's Handbook. A word of caution is given here. This table is for English units and should be used directly only with English units. However, in the program provided the appropriate conversions are built in to premit the use of the table.

The determination of the h_w - Q relation was done as follows:

1. Seclect D_c
2. Calculate $Q = K'_c\ d^{5/2}$

   where K'_c values are from Table 8-10, King's Handbook.

   See Appendix C, table 8 - 10

3. Calculate $V_c = \frac{Q}{A_c}$

The value of the cross sectional area, A_c, corresponding to D_c is calculated from the characterisitics of a segment of a circle. This calculation is incorporated into the program for computing Q and h_w. The program is included in the Appendix.

4. Calculated $h_f = L\ S_f$

   For a small change in depth $S_f = S_c$

   Where S_f is the friction slope

   S_c is the hydraulic slope corresponding to V_c

   $$S_f = \frac{(V_c\ n)^2}{R^{2/3}} \quad \text{(The Manning Equation)}$$

   This step is in the aforementioned program.

5. Calculate h_w

   This step is also included in the program.

For the analysis of the turnouts in mesqa 10, a simple power function relation between Q and h_w was used. This relationship was determined by calculating pairs of values of Q and h_w for a D_c range from 0.05 to 0.19

meters. These pairs were used in the standard pack curve fitting program to yield the equations:

$$h_w = 1.14\ Q^{.468} \qquad (5)$$

$$R^2 = .9956$$

and

$$Q = .74\ h_w^{2.1129} \qquad (6)$$

These equations are for a pipe 30 cm diameter, 5 meter length and a Manning n of 0.012 only.

SETTING ELEVATION OF THE MESQA

The water level in the mesqa needs to be high enough to supply water to the highest point in field being irrigated. The depth and cross sectional area of the flow in the mesqa need to provide for efficient conveyance of the flow to the turnouts. The determination of the required water level in the mesqa involved a series of steps each of which is discussed in turn.

Determine the elevation of the highest point in the field to be supplied by the turnout. Add to this elevation the depth of water needed at the head of the field or furrow to produce a satisfactory flow rate over the field or in the furrow. Then add the head loss through a measuring device, if any, and the head loss through the turnout to obtain the elevation of the required water level in the mesqa. The flow system is illustrated in Figure 6.

The floor of the mesqa should be set so a satisfactory depth of flow is provided. Another consideration in setting the floor elevation of the mesqa is to avoid having to place fill beneath it.

The largest head requirement in the flow system is probably the depth of water, Y, above the ground elevation. So its determination should be based on careful study. The Soil Conservation Service National Engineering Handbook* provides good guidance for this determination. In the case of

---

* SCS National Engineering Handbook, Section 15, Irrigation, Chapter 4 Border Irrigation, Soil Conservation Service, United States Department of Agriculture, Washington, D. C., August 1974.

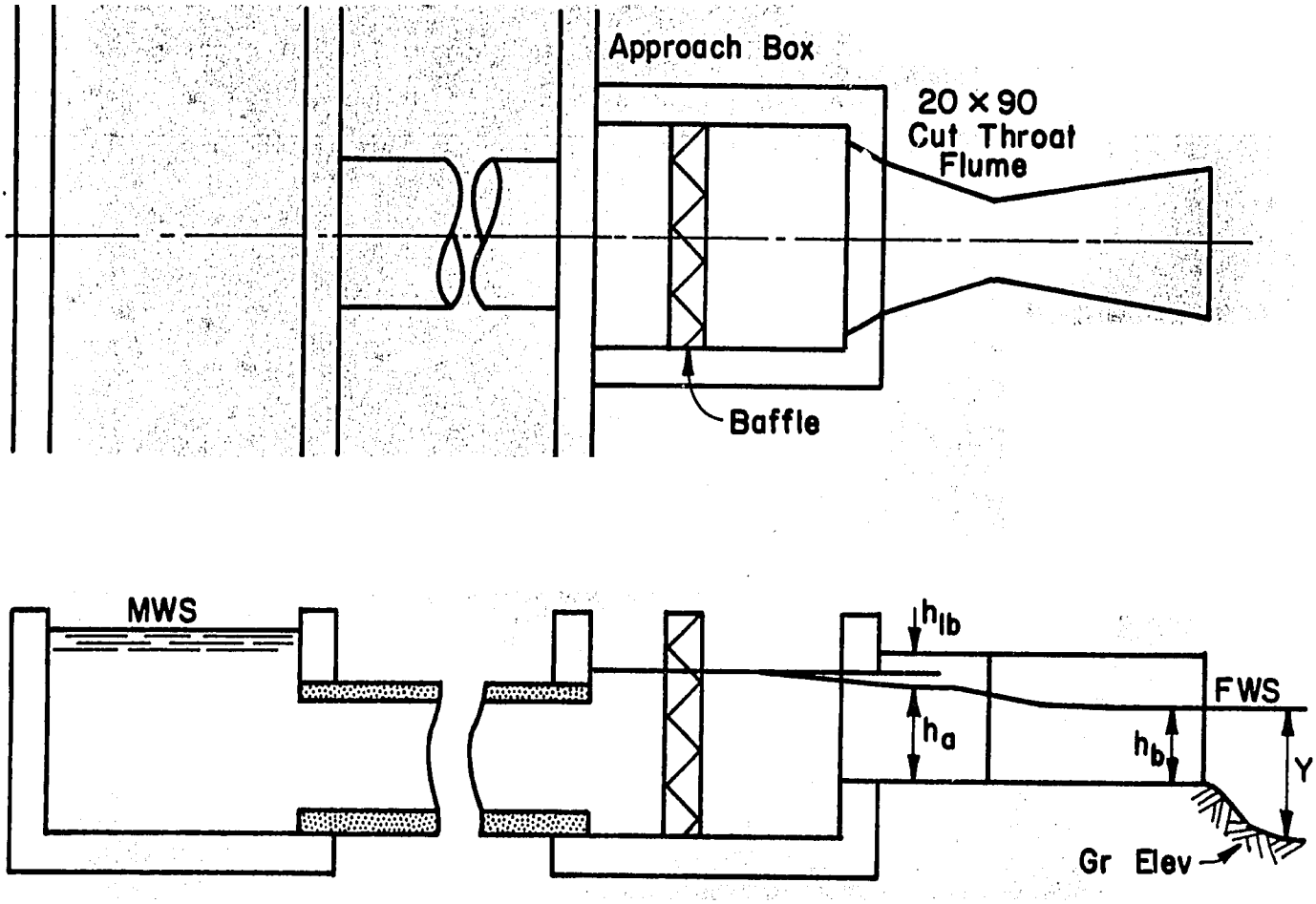

FIGURE 6. Head Requirements for Turnouts.

mesqa 10, water is supplied by a pump so there is no physical constraint upon the depth selected. However, energy conservation dictates that care still be exercised in determining the depth. A depth of 0.18 was chosen for mesqa 10, a rather conservative value.

Flow measurement is needed at each turnout of mesqa 10. A cutthroat flume was selected for this purpose, but it is possible that a change to another type of measuring device may be made. Nevertheless the procedure for installing the cutthroat will be described because this offers a description of the principles involved.

The loss through the cutthroat flume is the difference between h_a and h_b. Calculate h_a for free fall using the metric equation developed by Helal*.

$$Q = (3.281)^{(1.025 + n_1 - 3.0)} K_1 W^{1.025} h_a^{n_1} \qquad (7)$$

Helal also provides equations for K_1 and n_1 as functions of the flume length. Solved for the 0.9 meter long flume they yield:

$$K_1 = 2.962 + \frac{1.448}{L} = 2.962 + \frac{1.488}{0.9} = 4.571 \qquad (8)$$

$$n_1 = 1.418 + \frac{0.405}{L} = 1.418 + \frac{0.405}{0.9} = 1.868 \qquad (9)$$

where L = Flume length, meters

The equation for transition submergence at the change from free flow to submerged flow is:

$$S_t = .485 + .1887\ L - .0269\ L^2 + \frac{.0102}{L^2} \qquad (10)$$

where $S_t = \frac{h_b}{h_a}$

For the 0.9 M long flume $S_t = 0.65$, the ratio of h_b to h_a.

---

* Helal, M.; Cutthroat Flume Metric Equations, EWUP Staff Paper #6, May, 1980.

Substituting K_1 and n_1 in the free flow equation with w = 0.2 yields:

$$Q = 0.773\ h_a^{1.868} \qquad (11)$$

or

$$h_a = \left(\frac{Q}{.773}\right)^{\frac{1}{1.868}} = 1.148\ Q^{.535} \qquad (12)$$

For Q = 0.06 M^3/S, h_a = .255 meters. For free flow h_b = .255 x .65 = .166 meters or less. The flume head loss is therefore 0.255 - 0.166 = 0.089 meters. The bottom of the flume should be set at Gr. Elev. + 0.30 - h_b = Gr. Elev + 0.134.

The head loss through the entrance box was assumed to be equal to the velocity head at the h_a measuring point plus 0.02 meters for turbulence and screen loss in the entrance box. The width of the flume at the h_a measuring point is equal to $0.20 + (\frac{2}{3})(\frac{2}{3})(.30) = 0.333$ M. For a depth of 0.255 M the cross section area is 0.85 M^2. For a flow of 0.06 M^3/S the velocity head then is 0.025 M. Thus, $h_{\ell b}$ = 0.025 + .02 = 0.045 M.

Head loss through the turnout pipe is calculated with equation (4). For a length of 2 meters and a diameter of 0.3 M the head loss is 0.06 M for a discharge of 0.06 M^3/S.

The required elevation of the water surface in the <u>mesqa</u> is:

MWS = Ground Elevation (high point in field)	
+ depth on field Y,	0.18
+ head loss in flume,	0.089
+ head loss in entrance box,	0.045
+ head loss through turnout pipe	0.06

MWS = Ground Elevation + 0.374

The highest ground elevation, 16.65, was at the <u>saqia</u> farthest downstream (see Figure 7). It was evident, therefore, that this point controlled the <u>mesqa</u> water surface elevation and it was not necessary to examine the other <u>saqia</u> locations for control possibilities.

16.65 + 0.37 = 17.02

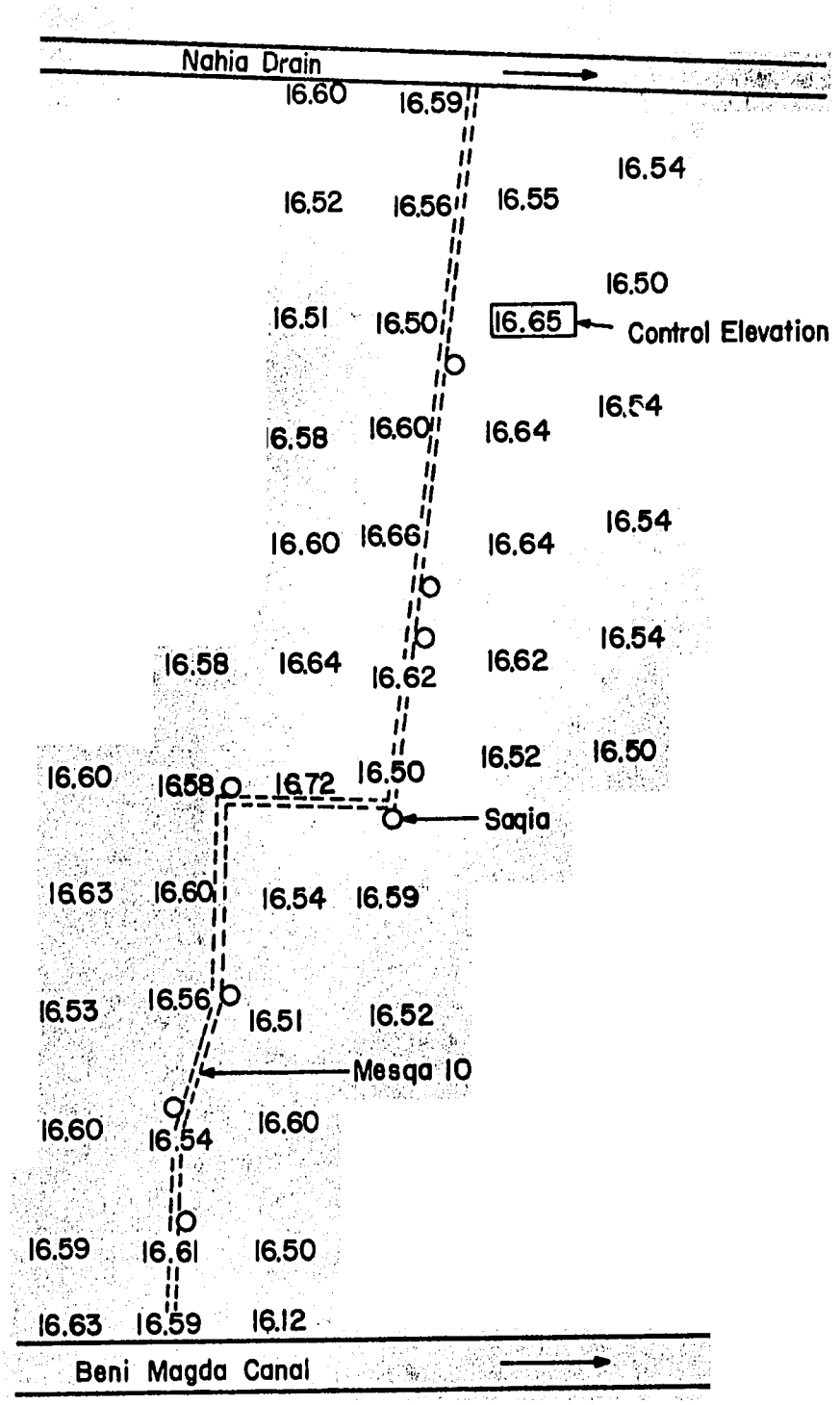

FIGURE 7. Ground Elevations in The Vicinity of Mesqa 10

The next step was to establish the bottom elevation of the mesqa. The factors involved were:

1. The water depth should be approximately equal to normal flow depth, 0.43 meters.

2. The bottom should be set on original ground or in cut. Avoid fill, if possible.

3. Provide sufficient free board to permit 0.05 M fluctuation of the water surface plus 0.05 M for wave action.

4. Limit depth of mesqa to 0.6 M at the upper end and 0.66 M at the lower end.

These conditions are shown in Figure 8 for station 500.

The floor elevation of the mesqa at station 500 was set at 16.62, an elevation which met the previously stated requirements. The floor slope of 0.0001 places the floor elevation at the upper end of the mesqa at elevation 16.67.

THE PUMP STATION

The pump station plan is shown on Figures 9 and 10.

One of the features of the pumping arrangements is the use of the mesqa as a storage reservoir. Limit switches are operated by the water surface elevation in the mesqa. If the withdrawal rate from the mesqa is less than the pumping rate, the water level will rise in the mesqa. When it reaches a predetermined maximum level, pumping will be stopped. Then the water level will fall until it reaches a lower limit. This operating arrangement eliminates water waste and saves energy. The cycling times are estimated in the following calculation:

Assume surges in mesqa are damped out
Assume pump discharge = 0.080 M^3/S
Assume pump shuts off at a water depth in the mesqa of 50 cm.
(The emergency spillway elevation)

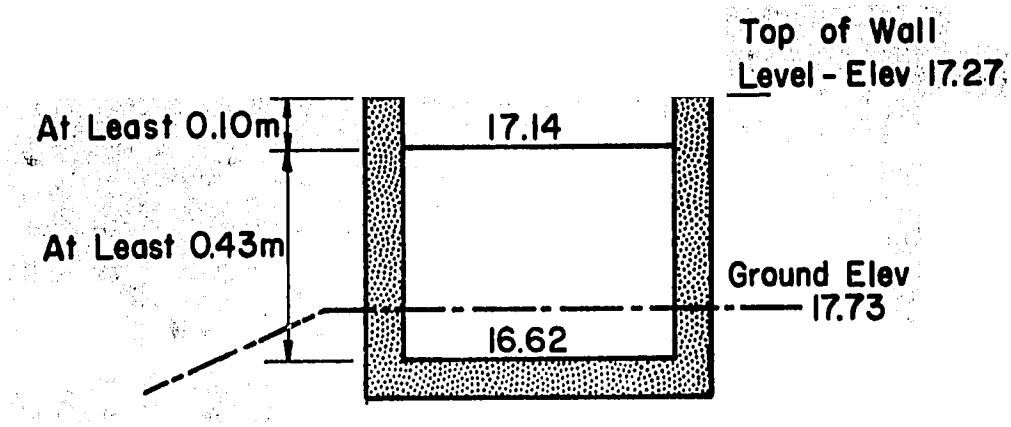

FIGURE 8. Mesqa Cross-section at Station 500

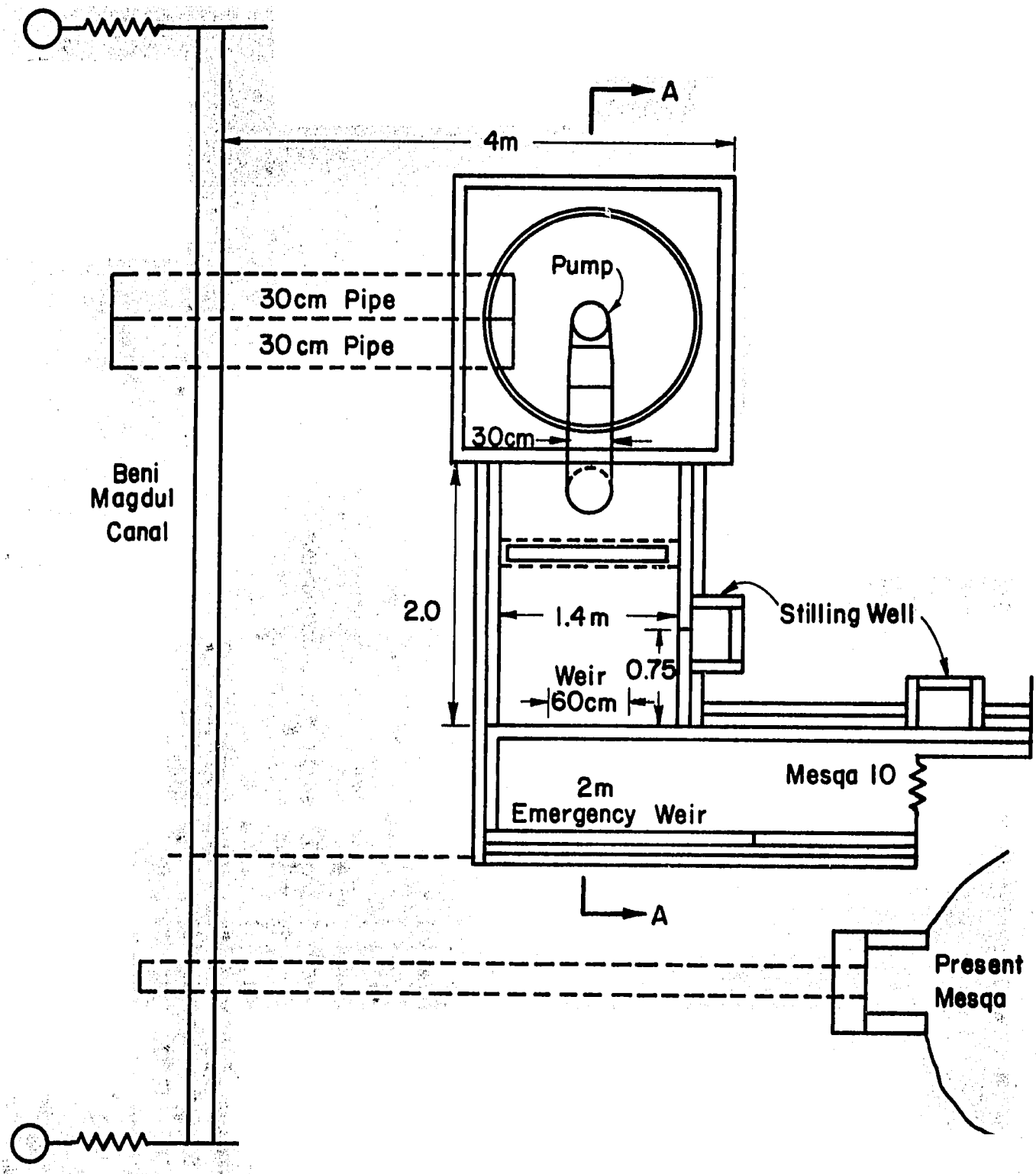

FIGURE 9: Plan View of Pump Station and Weirs Proposed for Mesqa 10

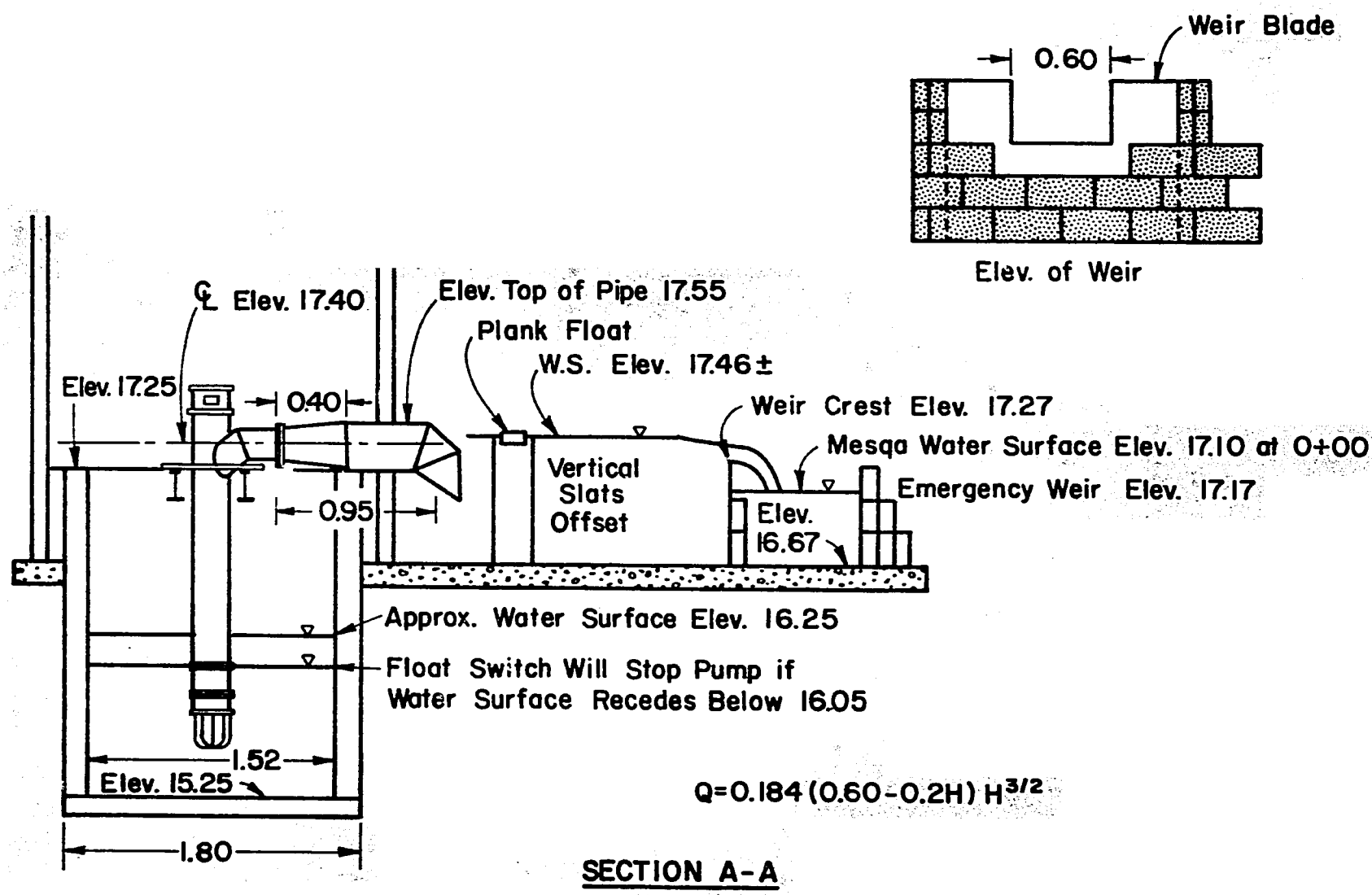

FIGURE 10. Cross-Section of Pump Station and Weirs

Assume mesqa is 0.71 m wide and 600 m long.
Assume turn on depths of 35 and 40 cm.

$$\text{On Time (min)} = \frac{\text{mesqa length} \times \text{mesqa width (off depth - on depth)}}{(0.080 - \text{use rate})60}$$

$$\text{Off Time (min)} = \frac{\text{mesqa length} \times \text{mesqa width (off depth - on depth)}}{\text{use rate} \times 60}$$

The calculated on-off times are given in the following table:

Table 3.

Water Use Rate by Farmers	Turn on switch set at			
	40 cm		35 cm	
	On	Off	On	Off
M^3/S	min	min	min	min
.07	71.0	10.1	106.5	15.2
.06	35.5	11.8	53.2	17.8
.05	23.7	14.2	35.5	21.3
.04	17.8	17.8	26.6	26.6
.03	14.2	23.7	21.3	35.5
.02	11.8	35.5	17.8	53.2

The cycling times are not short and "hunting" or frequent change will not be a problem.

One of the disadvantages of the fluctuating water level in the mesqa is the changing head on the turnouts. As the water level approaches the lower limit the flow rate through the turnouts will decrease. For example, a 30 cm turnout at a differential head of 0.06 m will discharge 0.06 M^3/S. Reduce the head to 0.03 m and the flow rate will drop to 0.043 M^3/S and the off times may become unduly long. The problem can be reduced by raising the lower limit switch. It is expected that some trials will be needed to find the appropriate setting for the limit switches. Despite some problems with unsteady flow, the system, as designed, is favored for its energy saving characteristics.

THE MESQA CROSSING

A crossing over the mesqa is required for movement of farm equipment. The practical solution is a culvert placed in the mesqa as shown in Figure 11. The head loss caused by the culvert was estimated for full flow to be 0.019 m for a flow of 0.06 M^3/S. This head loss increases the head on the turnouts upstream from the culvert and increases the flow through them at the expense of the downstream turnouts. This becomes of importance only when turnouts are open above and below the culvert. This will be discussed further in the section on Water Surface Profiles.

THE MESQA PROFILE

The profile of the mesqa is shown in Figure 12. The station values are approximate but close. The actual values will depend upon the locations for the turnouts and the crossing as determined in the field.

The invert elevations of turnouts 1, 2 & 3 are 10 cm above the floor of the mesqa and the elevations of turnouts 4 through 8 are 5 cm above the floor. The difference provides a more uniform flow distribution as described in the section on multiple turnout operation.

Water surface profiles are shown in Figure 13a for all flow (.06 M^3/S) through the turnout farthest downstream (station 500) and in Figure 13b for all flow through the uppermost turnout (Station 50). Since the head on the turnout requires a depth in the mesqa greater than normal depth backwater curve calculations were needed to determine the profile. The calculator program is described in Appendix D.

The elevation at the two ends are shown in the following table:

Table 4. Water Surface Elevations in Mesqa

	Flow through turnout 50	Flow through turnout 500
Sta 0	17140	17189
Sta 600	17140	17140

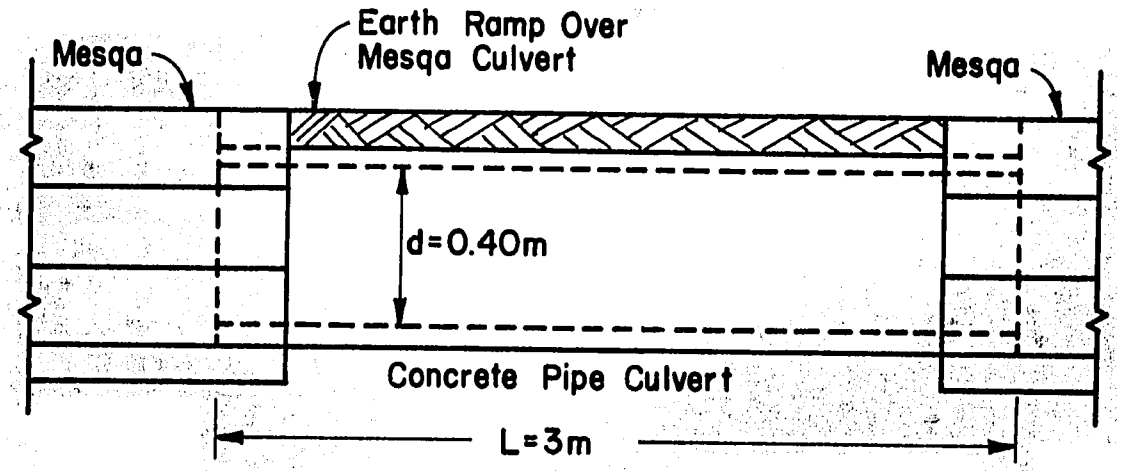

Figure 11. The Mesqa Crossing

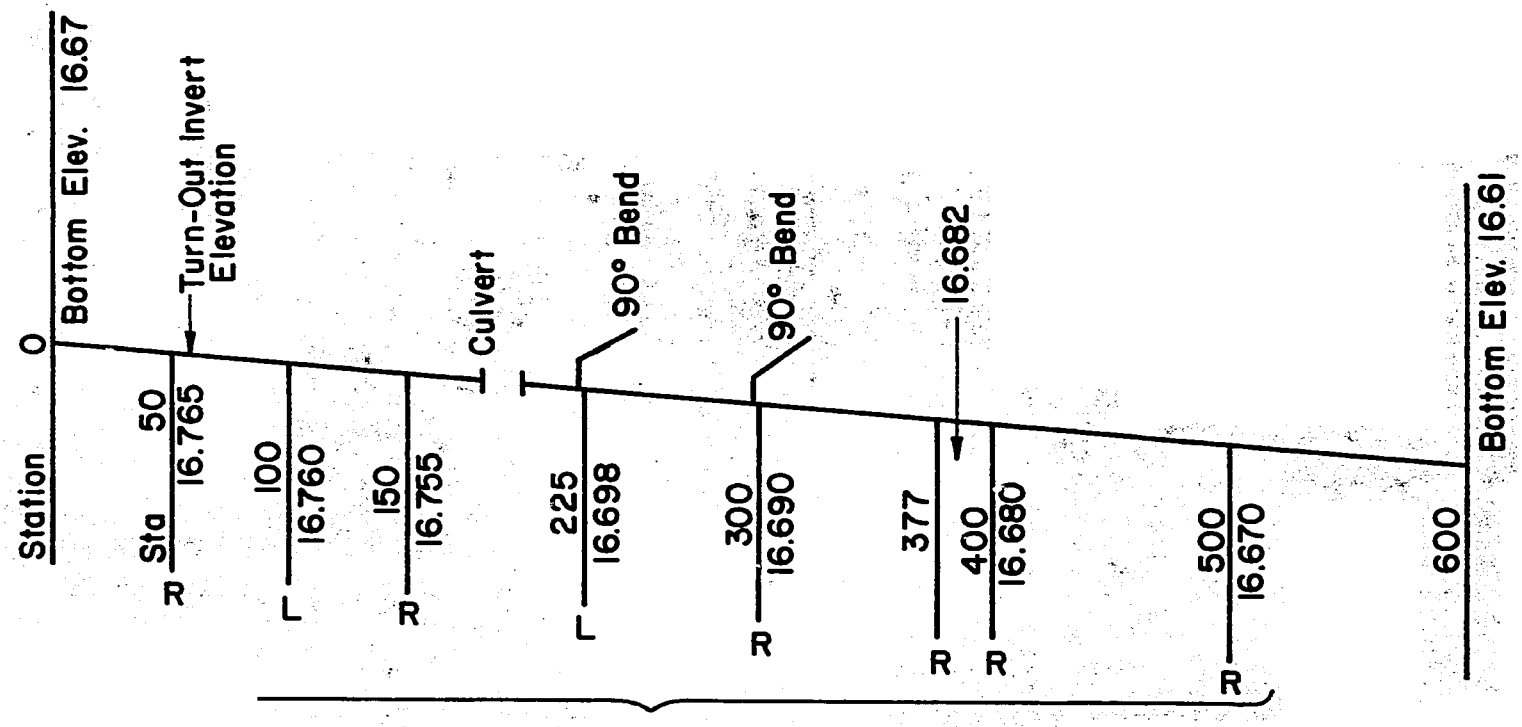

Turn-Out Locations and Invert Elevations

R= Right Side L=Left Side (Facing in the Direction of the Flow)

Elevations are of Turn-Out Inverts

Figure 12 THE MESQA PROFILE

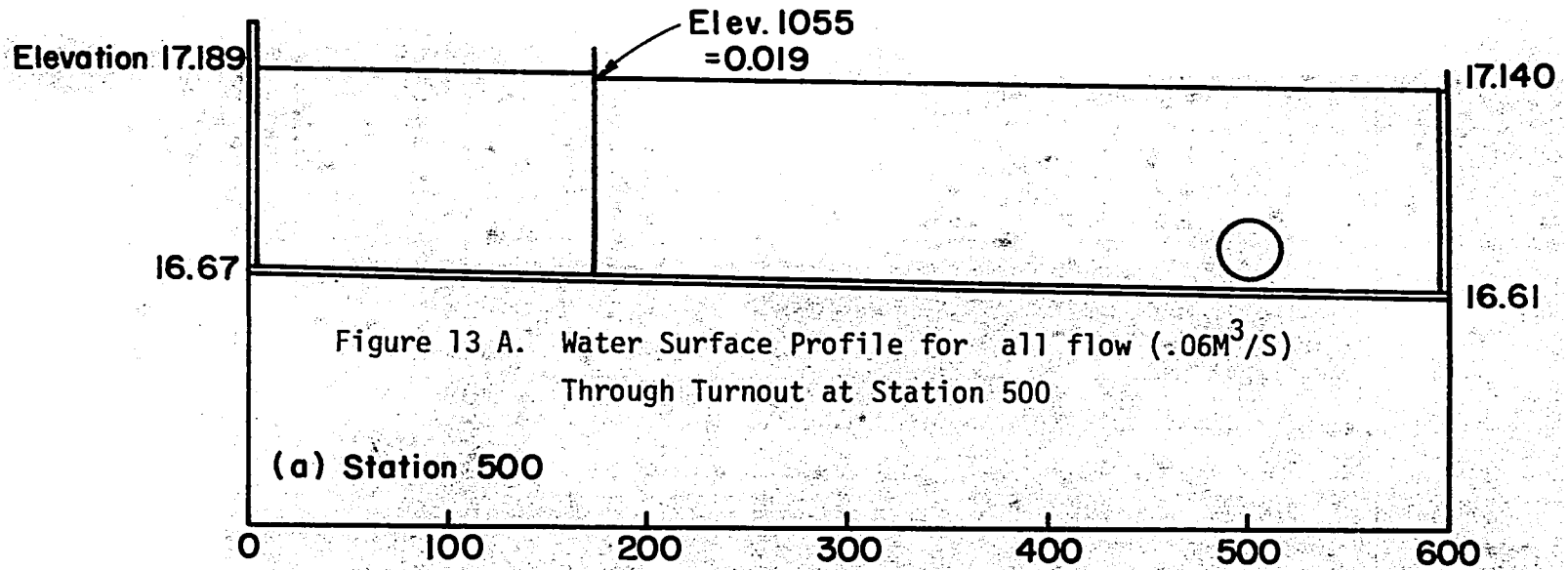

Figure 13 A. Water Surface Profile for all flow (.06M^3/S) Through Turnout at Station 500

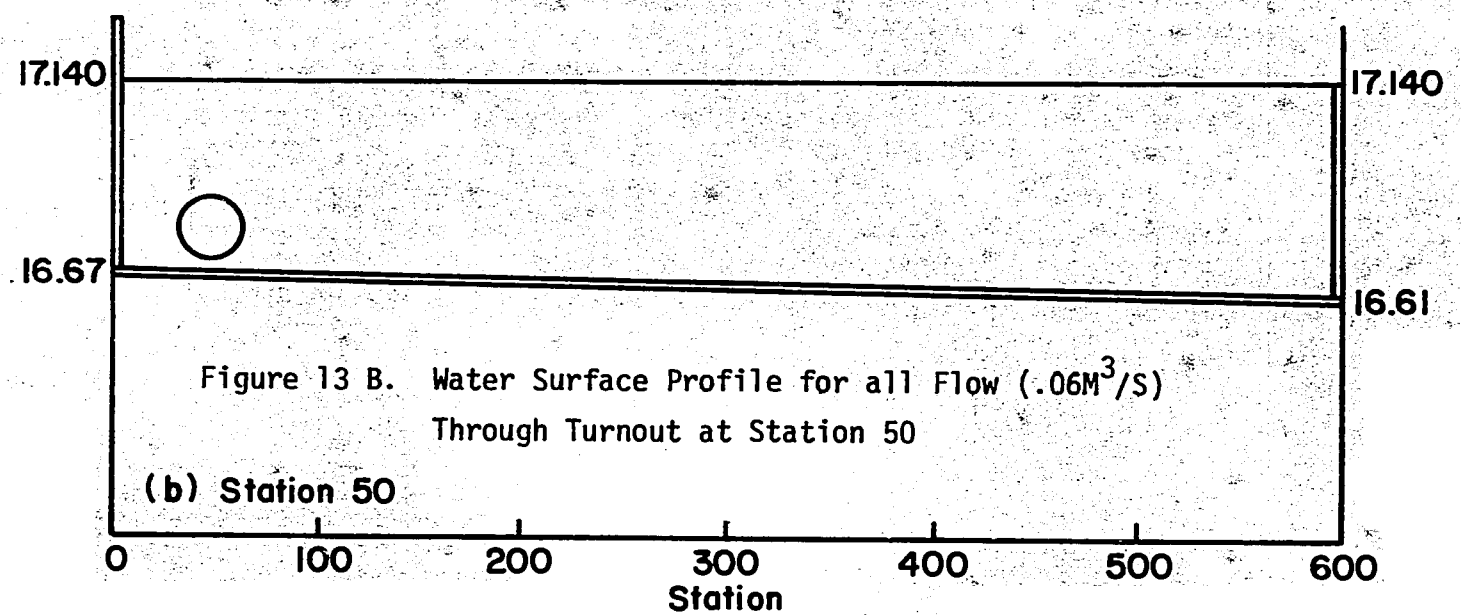

Figure 13 B. Water Surface Profile for all Flow (.06M^3/S) Through Turnout at Station 50

The water surface elevation of the downstream end of the mesqa is the same (17.140) for both flow cases. This is not necessarily ture for all mesqas. It is possible that the head on the uppermost turnout could cause the highest elevation at the downstream end. So this possibility must be investigated when establishing the elevation of the crest of the tail escape weir.

THE EMERGENCY WEIR

An emergency over flow weir was provided in the mesqa wall at the upper end of the mesqa. This weir was designed on the assumptions that the pumped inflow rate would be 0108 M^3/S, all turnout gates were closed, and the upper limit switch on the mesqa level failed to shut off the pump.

The weir crest was set 0.5 meters above the mesqa floor, or elevation 17.17. This allows a depth of notch of 0.1 meter. A crest 2 meters long requires a head of 0.08 meter to pass the flow. The free board of 2 cm is satisfactory for a short time, emergency condition because the pump operator would be available to take corrective action.

FLOW DISTRIBUTION FOR MULTIPLE TURNOUT OPERATION

The mesqa was designed on the assumption that all flow would be diverted through one turnout at a time. This is probably unlikely but it defines the upper limit for system capability and is the basis for conservative desgin. Recognizing that in all probability more than one turnout would be open at one time, a limited study was made of flow distribution for various settings. There are 255 combinationsof turnout openings from one at a time to all 8 at one time. It was decided not to invest the effort to study all of these. Instead 22 were selected for calculation. The combinations and results are shown in Table 5.

When this calculation was first attempted all turnout inverts were set 5 cm above the mesqa floor. It was found then that when turnouts were open both above and below the culvert (between turnout 3 and 4) that those upstream would have a larger discharge than those downstream of the culvert. So the first 3 turnouts were raised to place their inverts 10 cm above the mesqa floor. This is the condition represented by the table.

Table 5 :

Mesqa 10 - Flow Distribution Through Turnouts. Inverts of turnouts 1,2 and 3 set 0.10 meters above mesqa floor. The remainder are 0.05 meters above.

	1 50	2 100	3 150	4 225	5 300	6 377	7 400	8 500	Total
				Liters per second					
8	10.2	7.9	6.3	9.0	7.1	6.3	6.3	7.4	60.6
4					18.0	14.1	14.0	15.0	61.1
4				17.9	14.5	13.7	14.0		60.1
4			13.1	16.4	15.4	16.0			60.9
4		12.8	11.1	18.1	18.5				60.5
4	13.8	12.4	12.1	22.5					60.8
4		13.1		15.6		13.7		15.0	57.4
4	13.7		10.8		16.6		17.5		58.6
3						19.4	19.1	20.0	58.5
3					21.6	19.7	20.0		61.3
3				21.0	19.1	19.8			59.9
3			15.3	22.3	22.5				60.1
3		16.2	15.5	27.0					58.8
3	19.5	19.4	20.0						58.9
3				22.2		18.4		19.5	60.1
3			17.2		20.6		21.5		59.3
3		17.3		22.0		22.0			61.3
3	17.2		15.9		25.5				58.6
2						29.4		30.0	59.4
2			23.4		34.0				57.4
2	29.0		30.0						59.0
4.	14.5	13.2					16.5	17.3	61.5

Some explanation of the results may be needed. For example when all turnouts are open turnout 8 has a flow of 7.4 litres per second while turnout 6,123 meters upstream, has a flow of only 6.3. This seems wrong to those who have had considerable experience with other distribution systems wherein they usually found the smallest flow at the last outlet. However, in this case with a relatively smooth channel, friction loss is less than the rise of the channel bottom thereby causing a smaller head on the turnout. With discharge varying as the 2.113 power of the head a small change in head can have considerable impact. Thus, the calculated distributions seem reasonable. The program for this calculation is given in Appendix E.

APPENDIX A

HP-97 Program

Hydraulics of a rectangular channel

W, channel width, meters, store B

$\frac{1}{n}$, $\frac{1}{\text{Manning n}}$ store C

S , slope store D

Input depth, meters, press A, output Discharge M^3/S

Input discharge, M^3/S, press B, output Depth, M

Input depth (meters) press C, output Area, M^2

Enter discharge, Input depth, press D, output Slope

001	*LBLB	21 12	042	4	04
002	ENT↑	-21	043	Y^X	31
003	0	00	044	RCLI	36 46
004	X⇄Y	-41	045	x	-35
005	RCLC	36 13	046	GTO5	22 05
006	RCLB	36 12	047	*LBLC	21 13
007	x	-35	048	RCLB	36 12
008	RCLD	36 14	049	x	-35
009	$\sqrt{X}$	54	050	RTN	24
010	x	-35	051	*LBLA	21 11
011	÷	-24	052	ENT↑	-21
012	•	-62	053	GSBC	23 15
013	6	06	054	STOI	35 46
014	Y^X	31	055	X⇄Y	-41
015	STO1	35 46	056	2	02
016	*LBL5	21 05	057	x	-35
017	-	-45	058	RCLB	36 12
018	LSTX	16-63	059	+	-55
019	÷	-24	060	÷	-24
020	LSTX	16-63	061	2	02
021	X⇄Y	-41	062	ENT↑	-21
022	ABS	16 31	063	3	03
023	EEX	-23	064	÷	-24
024	3	03	065	Y^X	31
025	CHS	-22	066	RCLI	36 46
026	X⇄Y	-41	067	RCLC	36 13
027	X≤Y?	16-35	068	x	-35
028	SF2	16 21 02	069	x	-35
029	R↓	-31	070	F2?	16 23 02
030	R↓	-31	071	RTN	24
031	F2?	16 23 02	072	RCLD	36 14
032	RTN	24	073	$\sqrt{X}$	54
033	ENT↑	-21	074	x	-35
034	ENT↑	-21	075	RTN	24
035	2	02	076	*LBLD	21 14
036	x	-35	077	SF2	16 21 02
037	RCLB	36 12	078	GSBA	23 11
038	+	-55	079	÷	-24
039	RCLB	36 12	080	X^2	53
040	÷	-24	081	RTN	24
041	•	-62	082	R/S	51

APPENDIX B

Outlet for Mesqa - Head on Pipe

$$h_o = (f \frac{\ell}{D} + 1.5) \frac{V^2}{2g}$$

$\frac{\ell}{D}$ will range from 20 to 20

f will be approximately .02

$$V = \frac{\sqrt{2gh_o}}{(f \frac{\ell}{D} + 1.5)^{1/2}} \quad , \quad Q = \frac{\pi D^2}{4} \frac{\sqrt{2gh_o}}{(f \frac{\ell}{D} + 1.5)^{1/2}}$$

$$Q = \frac{3.48\ h_o^{1/2}\ D^2}{(.02\ \frac{\ell}{D} + 1.5)^{1/2}}$$

See Plot of h_o vs. Q with DZℓ as parameters

$$h_o^{1/2} = \frac{Q\ (.02\ \frac{\ell}{D} + 1.5)^{1/2}}{D^2\ 3.48}$$

$$h_o = \frac{Q^2\ (.02\ \frac{\ell}{D} + 1.5)}{D^4\ 12.11}$$

To Operate

Input diameter, D, meters
Press A

Input length, L, meters
Press B

Input head, h_o, meters
Press C

Output

D
L
h_o
Q, discharge, M^3/S

001	*LBLA	21	11
002	PTRX		-14
003	STO1	35	01
004	RTN		24
005	*LBLB	21	12
006	PRTX		-14
007	STO2	35	02
008	SPC	16	-11
009	RTN		24
010	*LBLC	21	13
011	PRTX		-14
012	STO3	35	03
013	√X		54
014	3		03
015	•		-62
016	4		04
017	8		08
018	x		-35
019	RCL1	36	01
020	x^2		53
021	x		-35
022	STO4	35	04
023	RCL2	36	02
024	RCL1	36	01
025	÷		-24
026	•		-62
027	0		00
028	2		02
029	x		-35
030	1		01
031	•		-62
032	5		05
033	+		-55
034	√X		54
035	RCL4	36	04
036	X=Y		-41
037	÷		-24
038	PRTX		-14
039	SPC	16	-11
040	RTN		24
041	R/S		51

APPENDIX C

Mesqa 10

Part full flow in a pipe tunrout, level bottom.
Flow at outlet will be at critical depth for free fall.

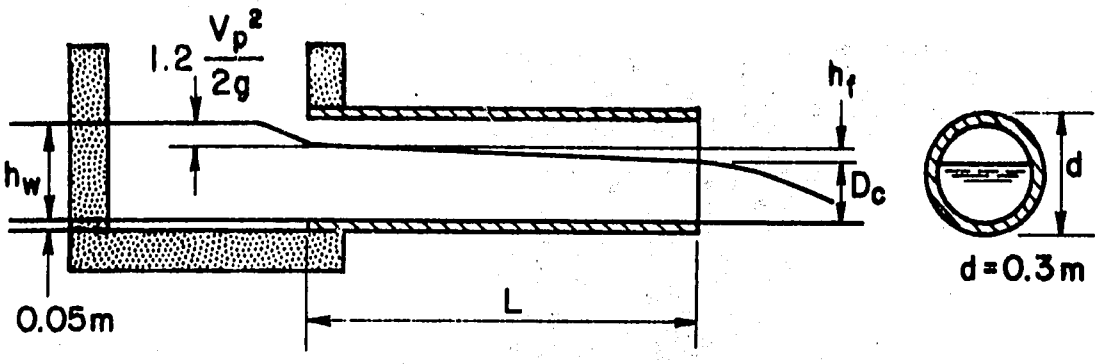

$$h_w = D_c + h_f + 1.2 \frac{V_p^2}{2g}$$

1 - select D_c .

2 - calculate $Q = K_c' \, d^5/2$

K_c values from table 8-10, King's Handbook, 6th Edition

Table 8-10. For Determining the Discharge Q of a Circular Channel Flowing Part Full When Flow Is at Critical Depth

Let $\frac{\text{depth of water}}{\text{diameter of channel}} = \frac{D_c}{d}$ and let K_c' = tabulated value

Then $Q = K_c' \, d^5/2$.

$\frac{D_c}{d}$	.00	.01	.02	.03	.04	.05	.06	.07	.08	.09
0.0		.0006	.0025	.0055	.0098	.0153	.0220	.0298	.0389	.0491
0.1	.0605	.0731	.0868	.1016	.1176	.1347	.1530	.1724	.1928	.2144
0.2	.2371	.2609	.2857	.3116	.3386	.3666	.3957	.4259	.4571	.4893
0.3	.523	.557	.592	.628	.666	.704	.743	.784	.825	.867
0.4	.910	.955	1.000	1.046	1.093	1.141	1.190	1.240	1.291	1.343
0.5	1.396	1.449	1.504	1.560	1.616	1.674	1.733	1.792	1.853	1.915
0.6	1.977	2.041	2.106	2.172	2.239	2.307	2.376	2.446	2.518	2.591
0.7	2.666	2.741	2.819	2.898	2.978	3.061	3.145	3.231	3.320	3.411
0.8	3.505	3.602	3.702	3.806	3.914	4.028	4.147	4.272	4.406	4.549
0.9	4.70	4.87	5.06	5.27	5.52	5.81	6.18	6.67	7.41	8.83

3 - calculate $h_f = LS_f$

for small change in depth $S_f = S_c$

$$S_f = \left(\frac{V_c n}{R_c^{2/3}} \right)^2$$

also, vp = vc

4 - Program for HP-97 provides solution for h_w.

HP-97 Program

Flow at critical depth at exit of a segment of circle solve for Q, head on pipe turnout, length L

Enter d - Press A

Enter D_c - Press B

At halt enter K'_c

Press C - calc Area

Press D - calc Hyd Rdd

Press E

at halt key L

R/S - answer h_w

[for n = 0.012]

001	*LBLA	21 11
002	PRTX	-14
003	STO1	35 01
004	RTN	24
005	*LBLB	21 12
006	PRTX	-14
007	STO2	35 02
008	SPC	16-11
009	RCL1	36 01
010	÷	-24
011	R/S	51
012	STO3	35 03
013	RCL1	36 01
014	3	03
015	•	-62
016	2	02
017	8	08
018	1	01
019	x	-35
020	2	02
021	•	-62
022	5	05
023	Y^X	31
024	RCL3	36 03
025	x	-35
026	3	03
027	5	05
028	•	-62
029	3	03
030	1	01
031	÷	-24
032	PRTX	-14
033	STO4	35 04
034	SPC	16-11
035	RTN	24
036	*LBLC	21 13
037	RCL1	36 01
038	X^2	53
039	Pi	16-24
040	x	-35
041	7	07
042	2	02
043	0	00
044	÷	-24
045	STO5	35 05
046	RCL1	36 01
047	2	02
048	÷	-24
049	STO6	35 06
050	RCL2	36 02
051	-	-45
052	RCL6	36 06
053	÷	-24
054	COS^{-1}	16 42
055	STO7	35 07
056	RCL5	36 05
057	x	-35
058	STO8	35 08
059	RCL1	36 01
060	RCL2	36 02
061	-	-45
062	RCL2	36 02
063	x	-35
064	$\sqrt{X}$	54
065	RCL6	36 06
066	RCL2	36 02
067	-	-45
068	x	-35
069	RCL8	36 08
070	X⇄Y	-41
071	-	-45
072	STO9	35 09
073	PRTX	-14
074	RTN	24
075	*LBLD	21 14
076	RCL1	36 01
077	Pi	16-24
078	x	-35
079	RCL7	36 07
080	x	-35
081	1	01
082	8	08
083	0	00
084	÷	-24
085	RCL9	36 09
086	X⇄Y	-41
087	÷	-24
088	PRTX	-14
089	STO0	35 00
090	SPC	16-11
091	CLX	-51
092	RTN	24
093	*LBLE	21 15
094	RCL4	36 04
095	RCL9	36 09
096	÷	-24
097	P⇄S	16-51
098	STO0	35 00
099	X^2	53
100	1	01
101	9	09
102	•	-62
103	6	06
104	3	03
105	÷	-24
106	STO1	35 01
107	RCL0	36 00
108	•	-62
109	0	00
110	1	01
111	2	02
112	x	-35
113	P⇄S	16-51
114	RCLB	36 00
115	•	-62
116	6	06
117	6	06
118	6	06
119	7	07
120	Y^X	31
121	÷	-24
122	X^2	53
123	R/S	51
124	PRTX	-14
125	x	-35
126	RCL2	36 02
127	+	-55
128	P⇄S	16-51
129	RCL1	36 01
130	1	01
131	•	-62
132	2	02
133	x	-35
134	+	-55
135	PTRX	-14
136	P⇄S	16-51
137	SPC	16-11
138	RTN	24
139	R/S	51

APPENDIX D

HP-97 Program

Backwater computation, for constant discharge for the full length of channel

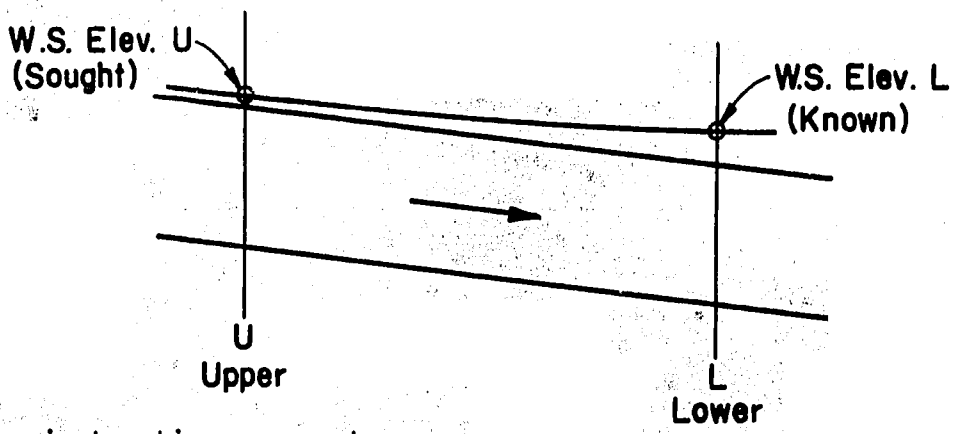

Program instructions on next page.

001	*LBLA	21 11
002	STO1	35 01
003	R↓	-31
004	STO2	35 02
005	RTN	24
006	*LBLB	21 12
007	RCL1	36 01
008	RCLC	36 13
009	x	-35
010	RCLE	36 15
011	+	-55
012	RCL2	36 02
013	-	-45
014	CHS	-22
015	STO4	35 04
016	RCLA	36 11
017	x	-35
018	STO5	35 05
019	RCL4	36 04
020	2	02
021	x	-35
022	RCLA	36 11
023	+	-55
024	RCL5	36 05
025	X⇄Y	-41
026	÷	-24
027	STO6	35 06
028	RCLI	36 46
029	RCL5	36 05
030	÷	-24
031	STO7	35 07
032	X^2	53
033	1	01
034	9	09
035	•	-62
036	6	06
037	3	03
038	÷	-24
039	STO8	35 08
040	RCL2	36 02
041	+	-55
042	STO9	35 09
043	RCL7	36 07
044	RCLD	36 14
045	x	-35
046	STO3	35 03
047	RCL6	36 06
048	•	-62
049	6	06
050	6	06
051	7	07
052	Y^X	31
053	RCL3	36 03
054	÷	-24
055	1/X	52
056	X^2	53
057	STO0	35 00
058	P⇄S	16-51
059	RCL0	36 00
060	+	-55
061	2	02
062	÷	-24
063	P⇄S	16-51
064	STO3	35 03
065	RCL1	36 01
066	P⇄S	16-51
067	RCL1	36 01
068	-	-45
069	P⇄S	16-51
070	RCL3	36 03
071	x	-35
072	P⇄S	16-51
073	RCL9	36 09
074	+	-55
075	STO6	35 06
076	P⇄S	16-51
077	RCL9	36 09
078	-	-45
079	ABS	16 31
080		-62
081	0	00
082	0	00
083	1	01
084	X>Y?	16-34
085	GTO1	22 01
086	GTO2	22 02
087	*LBL1	21 01
088	RCL1	36 01
089	PRTX	-14
090	P⇄S	16-51
091	STO1	35 01
092	P⇄S	16-51
093	RCL2	36 02
094	PRTX	-14
095	R/S	51
096	+	-55
097	PRTX	-14
098	P⇄S	16-51
099	STO2	35 02
100	P⇄S	16-51
101	RCL9	36 09
102	R/S	51
103	+	-55
104	P⇄S	16-51
105	STO9	35 09
106	P⇄S	16-51
107	RCL0	36 00
108	P⇄S	16-51
109	STO0	35 00
110	P⇄S	16-51
111	SPC	16-11
112	RTN	24
113	*LBL2	21 02
114	P⇄S	16-51
115	RCL6	36 06
116	P⇄S	16-51
117	RCL8	36 08
118	-	-45
119	STO2	35 02
120	GTOB	22 12
121	R/S	51

HP-97 Program

Backwater computation, for constant discharge for the full length of channel.

Prestore: Width, W in A; Slope, S, in C; Manning n in D; Bottom elevation at downstream end of channel in E.

Water surface elevation at L in 1
Energy Line elevation at L in 9
Station at L in 2

f(p ↔ s)

Enter water surface elevation at L
Input station at L

PRESS A
PRESS B

At pause enter 0, R/S
At second pause enter 0, R/S

output - Station identification
W.S. elevation at station
W.S. elevation at station

The foregoing procedure was necessary to place a friction slope value in storage for the lower reach.

XX Enter estimated water surface elevation at U.
Enter station at U

PRESS A
PRESS B

At pause enter eddy loss in reach, R/S
At second pause enter eddy loss in reach, R/S

output - Station identification
Water Surface elevation at station
Water Surface elevation at station
corrected for eddy loss

RETURN TO XX and continue process until upper end of channel is reached.

APPENDIX E

Procedure for Estimating Division of Flow Among Two or More Open Turnouts

Definition Sketch

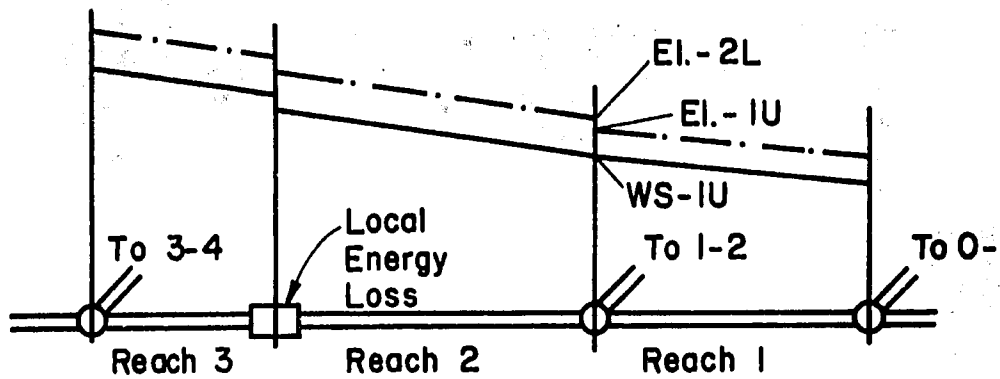

Nomenclature

Reach - The channel between two turnouts. The reach farthest downstream shall be reach 1.

TO - Turnout. TO 1-2 is the turnout between reaches 1 & 2.

L - Lower end of reach e.g., 2L is the lower end of reach 2 just immediately above TO 1-2. Therefore, immediately below TO 1-2 is location 1 U. Though both of these points are of the same station they may have different discharges because of diversion at turnout.

U - Upper end of reach.

Procedure

1. Select the turnouts which are to be open. In this example calculation, the turnouts at stations 100 and 500 will be open. The downstream turnout (500) is TO 0-1 and the reach approaching it is reach 1. See definition sketch.

2. Prepare a list of stations at which energy line calculations are required. This list will include each turnout, each local energy loss point, and additional intermediate points so that no reach length will exceed 50 meters (the criterion of 50 meters is suitable for channels with gradually changing water surface slope). The list for this calculation is given in the following table:

A list of stations requiring energy line elevation calculations. Two turnouts are shown open. This is the condition for the sample calculation.

Station		Description	Height of invert above mesqa floor	Loss Coefficient	Turn-out open
Turnout	Intermediate point				
	0	Beginning			
50			0.1		
100			0.1		X
150			0.1		
	200	Culvert		4	
	220	Bend		1	
225			0.05		
	260				
	295	Bend		1	
300			0.05		
	340				
377			0.05		
400			0.05		
	450				
500			0.05		X
	600	End			

The table includes information on the height of the turnout invert above the mesqa bottom and the coefficients for energy loss calculations.

3. Estimate the discharge through TO 0-1. A starting assumption is that it is the total inflow discharge divided by the number of open turnouts. In the example the total inflow discharge is 0.06 M^3/s and the number of turnouts is 2. Therefore the discharge through TO 0-1 is estimated as 0.030 M^3/s

4. Calculate the following quantities for station 1 L.

   Depth of flow - a function of discharge and head requirement
   Water surface Elevation
   Energy Line Elevation
   Firction Slope.

5. Proceed to next station upstream and calculate the quantities listed in step 4 for station 1 U. This requires a calculation of the water surface profile from the lower to the upper station by backwater curve methods. The calculation is reiterated until the energy line elevation of the upstream station is correctly estimated. The details are incorporated into the computer program and will not be described here. For more information on this technique, the reader is referred to hydraulic works describing the standard step procedure.

6. If the upstream station is an open turnout (in this case this is station 100 which is not reached until near the end of the calculation), calculate the discharge diverted at the open turnout. This is a function of the water surface elevation at the upper end of the reach immediately downstream.

   At each diversion point it is necessary to calculate the friction slope immediately upstream. It is not the same as that immediately downstream because the discharge has increased.

7. If the upstream station is a local loss point, say a bend or culvert, calculate the energy loss. A satisfactory approximation where velocity is small as in this case is to assume all loss is reflected in water surface drop. This procedure was used because of limitations of program steps in the computer.

8. Continue the process until the discharge through the uppermost open turnout has been calculated and the total discharge has been determined. If this differs from the planned inflow, 0.060 M^3/S here, repeat the calculation starting with step 3 adjusting the estimated value up or down as needed.

9. The calculation can be continued to station 0 to determine the water surface elevation at the head of the channel.

HP-97 Program for division of mesqa flow among turnout

STORAGE REGISTERS

		Primary		Secondary	
A	W, mesqa width	1.	W.S. elevation L	1.	W. S. elevation U
B		2.	E.L. elevation L	2.	E.L. elevation U'
C	S_o, bottom slope	3.	d L	3.	du
D	n, Manning n	4.	q	4.	q
E	Bottom elevation at 0	5.	Station L	5.	Station U
		6.		6.	A_u
		7.		7.	V_u
		8.		8.	$V_u^2/2g$
		9.	S f L	9.	S f U
		0.		0.	E.L. elevation U"

Within a reach qu = qL

ENTER Q TO 0-1

Key Station L

PRESS E

183	*LBLE	21 15
184	STO5	35 05
185	R↓	-31
186	PRTX	-14
187	STO4	35 04
188	•	-62
189	4	04
190	7	07
191	Yx	31
192	1	01
193	•	-62
194	1	01
195	4	04
196	x	-35

At halt Key height of invert above mesqa bottom

PRESS R/S

197	R/S	51
198	+	-55
199	STO3	35 03
200	RCL5	36 05
201	RCLC	36 13
202	x	-35
203	RCLE	36 15
204	-	-45
205	CHS	-22
206	RCL3	36 03
207	+	-55
208	STO1	35 01
209	RCL3	36 03
210	RCLA	36 11
211	x	-35
212	RCL4	36 04
213	X⇄Y	-41
214	÷	-24
215	X^2	53
216	1	01
217	9	09
218	•	-62
219	6	06
220	2	02
221	÷	-24
222	STO8	35 08
223	RTN	24
224	R/S	51

Manually RCL 1
+
STO 2

HP-97 Program - Mesqa Flow Division (Continued)

Enter 0 for no diversion
or
1 for diversion

Enter 0 for no loss
or
1 for loss

Key Station U

PRESS A

001	*LBLA	21 11
002	P⇄S	16-51
003	PRTX	-14
004	STO5	35 05
005	R↓	-31
006	STOB	35 12
007	R↓	-31
008	STOI	35 46
009	P⇄S	16-51
010	RTN	24

Key estimated
WS-U
Usually RCL 2
PRESS B

011	*LBLB	21 12
012	P⇄S	16-51
013	STO1	35 01
014	RCL5	36 05
015	RCLC	36 13
016	x	-35
017	RCLE	36 15
018	X⇄Y	-41
019	-	-45
020	RCL1	36 01
021	-	-45
022	CHS	-22
023	STO3	35 03
024	RCLA	36 11
025	x	-35
026	STO6	35 06
027	P⇄S	16-51
028	RCL4	36 04
029	X⇄Y	-41
030	÷	-24
031	P⇄S	16-51
032	STO7	35 07
033	X^2	53
034	1	01
035	9	09
036	•	-62
037	6	06
038	2	02
039	÷	-24
040	STO8	35 08
041	RCL1	36 01
042	+	-55
043	STO2	35 02
044	RCL3	36 03
045	2	02
046	x	-35
047	RCLA	36 11
048	+	-55
049	RCL6	36 06
050	X⇄Y	-41
051	÷	-24
052	4	04
053	ENT↑	-21
054	3	03
055	÷	-24
056	Y^X	31
057	RCL7	36 07
058	RCLD	36 14
059	x	-35
060	X^2	53
061	X⇄Y	-41
062	÷	-24
063	STO9	35 09
064	P⇄S	16-51
065	RCL9	36 09
066	+	-55
067	2	02
068	÷	-24
069	RCL5	36 05
070	P⇄S	16-51
071	RCL5	36 05
072	-	-45
073	x	-35
074	P⇄S	16-51
075	RCL2	36 02
076	+	-55
077	P⇄S	16-51
078	STO0	35 00
079	RCL2	36 02
080	-	-45
081	ABS	16 31
082	•	-62
083	0	00
084	0	00
085	1	01
086	X>Y?	16-34
087	GTO1	22 01
088	GTO2	22 02
089	*LBL1	21 01
090	RCL1	36 46
091	X=0?	16-43
092	GTO4	22 04
093	GTO3	22 03
094	*LBL3	21 03
095	RCL3	36 03

At halt Key height
of invert above <u>mesqa</u>
bottom
PRESS R/S

096	R/S	51
097	-	-45
098	2	02
099	•	-62
100	1	01
101	1	01
102	3	03
103	Y^X	31
104	•	-62
105	7	07
106	4	04
107	x	-35
108	PTRX	-14
109	P⇄S	16-51

HP-97 Program - Mesqa Flow Division (continued)

109	P⇄S	16-51
110	RCL4	36 04
111	+	-55
112	PRTX	-14
113	STO4	35 04
114	P⇄S	16-51
115	GSBD	23 14
116	RTN	24
117	*LBL4	21 04
118	RCLB	36 12
119	X=0?	16-43
120	GTO5	22 05
121	GTO6	22 06
122	*LBL6	21 06
123	RCL8	36 08

At halt key
loss coefficient
PRESS R/S

124	R/S	51
125	x	-35
126	PRTX	-14
127	RCL1	36 01
128	+	-55
129	STO1	35 01
130	RCL3	36 03
131	RCL8	36 08
132	+	-55
133	STO3	35 03
134	RCLA	36 11
135	x	-35
136	RCL4	36 04
137	X⇄Y	-41
138	÷	-24
139	X^2	53
140	1	01
141	9	09
142	.	-62
143	6	06
144	2	02
145	:	-24
146	RCL1	36 01
147	+	-55
148	STO2	35 02
149	GSBD	23 14
150	RTN	24
151	*LBL5	21 05
152	GSBD	23 14
153	RTN	24
154	*LBL2	21 02
155	RCL0	36 00
156	RCL8	36 08
157	-	-45
158	P⇄S	16-51
159	GTOB	22 12
160	*LBLD	21 14
161	RCL1	36 01
162	PRTX	-14
163	SPC	16-11
164	P⇄S	16-51
165	STO1	35 01
166	P⇄S	16-51
167	RCL2	36 02
168	P⇄S	16-51
169	STO2	35 02
170	P⇄S	16-51
171	RCL3	36 03
172	P⇄S	16-51
173	STO3	35 03
174	P⇄S	16-51
175	RCL5	36 05
176	P⇄S	16-51
177	STO5	35 05
178	P⇄S	16-51
179	RCL9	36 09
180	P⇄S	16-51
181	STO9	35 09
182	RTN	24

OUTPUT

Q to 01	0.036	***
Sta 1	500.000	***
WS 1L	16.909	***
Std.	450.000	***
WS elev.	16.914	***
	400.000	***
	16.919	***
	377.000	***
	16.921	***
	300.000	***
	16.929	***
	295.000	***
Bend loss-	0.002	***
	16.931	***
	260.000	***
	16.936	***
	225.000	***
	16.939	***
	220.000	***
Bend loss-	0.002	***
	16.941	***
	200.000	***
Culvert →	0.006	***
loss	16.950	***
	150.000	***
	16.959	***
	100.000	***
Q	0.025	***
Total Q	0.061	***
WS elev	16.961	***
	50.000	***
	16.965	***
	0.000	***
	16.970	***
	0.061	***

AMERICAN EQUIVALENTS OF EGYPTIAN ARABIC TERMS AND MEASURES COMMONLY USED IN IRRIGATION WORK

Land Area	In Sq. Meters	In Acres	In Feddans	In Hectares
1 acre	4,046.856	1	0.96335	0.40469
1 feddan	4,200.8335	1.03805	1	0.42008
1 hectare (ha)	10,000.00	2.47105	2.38048	1
1 sq. kilometer	100×10^4	247.105	238.048	100.00
1 sq. mile	259×10^6	640.00	616.4	259.00

Water Measures

1 billion m^3 = 810,710 acre-feet

1000 m^3 = 0.81071 acre-foot = 9.72852 acre-inch

1000 m^3/feddan = 0.781 acre-foot/acre = 9.372 acre-inch/acre

(= 238 mm of rainfall)

Other Conversions

1 ardab = 198 liters = 5.62 bushels (U.S.)

1 ardab/feddan = 5.41 bushels/acre

1 kg/feddan = 2.12 lb/acre

1 donkey load = 100 kg

1 camel load = 250 kg

1 donkey load of manure = 0.1 m^3

1 camel load of manure = 0.25 m^3

Egyptian Unit for Field Crops

Crop	Eg. Unit	In Kg.	In Lbs.	In Bushels
Lentils	ardab	160.0	352.42	5.87
Clover	ardab	157.0	345.81	5.76
Broad Beans	ardab	155.0	341.41	6.10
Wheat	ardab	150.0	330.40	5.51
Maize, Sorghum	ardab	140.0	308.37	5.51
Barley	ardab	120.0	264.32	5.51
Cottonseed	ardab	120.0	264.32	8.26
Sesame	ardab	120.0	264.32	
Groundnut	ardab	75.0	165.20	7.51
Rice	dariba	945.0	2081.50	46.26
Chick-peas	ardab	150.0	330.40	
Lupine	ardab	150.0	330.40	
Linseed	ardab	122.0	268.72	
Fenugreek	ardab	155.0	341.41	
Cotton (unginned)	metric qintar	157.5	346.92	
Cotton (lint or ginned)	metric qintar	50.0	110.13	

Egyptian Farming and Irrigation Terms

fara = branch
marwa = small distributer, irrigation ditch
masraf = field drain
mesqa = small canal feeding from 10 to 40 farms
qirat = cf. English "Karat," a land measure of 1/24 feddan, 175.03 m^2
qaria = village
sahm = 1/24th of qirat, 7.29 m^2
saqia = animal powered water wheel
sarf = drain (vb.), or drainage. See also masraf, (n.)