PN-AAM-491
ISN-27759

Inshore and Nearshore Resources
Training Workshop
University of the South Pacific
Suva, Fiji
13-17 July 1981

Working paper
CCOP/SOPAC

ENVIRONMENTAL IMPACT OF SAND EXTRACTION ACTIVITIES ON THE INSULAR SHELF

Document prepared by Gilberto Cintrón, Director of the Marine Resources Division, Department of Natural Resources of the Commonwealth of Puerto Rico, and Research Associate of the Island Resources Foundation, U.S. Virgin Islands.

Inshore and Nearshore Resources
Training Workshop
University of the South Pacific
Suva, Fiji
13-17 July 1981

Working paper
CCOP/SOPAC

ENVIRONMENTAL IMPACT OF SAND EXTRACTION ACTIVITIES ON THE INSULAR SHELF

Document prepared by Gilberto Cintrón, Director of the Marine Resources Division, Department of Natural Resources of the Commonwealth of Puerto Rico, and Research Associate of the Island Resources Foundation, U.S. Virgin Islands.

CONTENTS

		Page
1.	Introduction	1
2.	Sources and Sinks of Shelf Sediments	2
3.	Impact of Sand Extraction on Beach Processes	3
4.	Biological Considerations	7
	4.1 Coral reefs	8
	4.2 Sedimentation and coral reefs	9
	4.3 Sedimentation and seagrass beds	10
	4.4 Importance of reefs and seagrass beds	12
5.	Impact of Dredging on Biological Systems: A Review	12
6.	Recovery of Damaged Systems	15
7.	Dredging Methods	16
8.	Conclusions	18
9.	Literature Cited	20

1. Introduction

The submarine shelves of continents and islands often harbor many valuable natural resources. We may think first of petroleum, natural gas, some metals, precious corals, or fish, but the unconsolidated sediments of the shelf itself are attracting increased attention; some of these sediments may be suitable for use as fine aggregate in the construction industry. Offshore sand deposits represent a potential solution to the sand needs of a concrete-based construction industry in areas where suitable land-based sources are incapable of supplying the local demand.

Islands, in particular, often suffer rapid depletion of land-based sand sources. Importation of sand is generally costly because of the high and rising costs of maritime transport (tied more or less directly to fossil fuel prices). Traditionally, sand has been obtained from beaches, dunes, or river mouths. This practice can lead to drastic shoreline changes when people interfere with natural deposits to a significant degree, over a period of time.

Along exposed or high energy coasts, alterations to the natural flow of sand cause immediate changes in beach morphology. On leeward (protected) shores, where littoral processes are slower and changes probably take place in a discontinuous, episodic manner, human interference may result in drastic beach recession only after rare episodes of severe swells or storms. Many years may elapse between man's actions and nature's response. When the response occurs, however, it is always detrimental to human needs and desires, involving the loss of valuable beaches (assets to the tourism industry of our islands) and sometimes

the destruction of costly beachfront property.

When sand concentrates in the form of dunes along high energy coasts, these too are often "mined" for sand. Unfortunately, dunes may be crucially important as physical barriers protecting low-lying coastal areas from wave damage and flooding during storms. Dunes are very effective in absorbing such storm-generated wave energy and although they may suffer intense periodic erosion at these times, they rebuild themselves naturally in the intervening storm-free years. Sand extraction from dunes, even if only partial, may upset the delicate balance between buildup and breakdown, lessening the dunes' resistance to subsequent storm waves. Extraction of sand from coastal dunes exposes the low ground behind to direct wave damages and flooding. Since catastrophic storms recur at long time intervals, their potentially disastrous effects may not be seen immediately.

2. Sources and Sinks of Shelf Sediments

Shelf sediments are admixtures of terrigenous and marine derived materials. These sediments are deposited as blankets of varying thickness over the shelf and are moved onshore toward beaches by waves. Once there, the wind shapes them to form dunes.

In figure 1, four source areas for shelf sands are identified: (1) upland deposits - rocks and soils; (2) *in situ* production, by carbonate-fixing organisms; (3) cliff and coastal erosion; and (4) chemical precipitation.

The movement of sand from its source to the coastal areas is accomplished by energy in the form of river flows (driven by rainfall), wind, waves, and tides. Calcium incorporated into organic tissues by

organisms contributes to form new calcareous deposits. As shown in figure 1, rain is the agent that erodes upland soils and carries these terrigenous sediments to the coastal shelf. Rain also increases the rate of weathering or breakdown of the parent rocks. In very moist environments soils are often deep and there is more erosion and soil transport to the coast by rivers.

Sediments are also formed in situ by the activity of echinoderms, molluscs, reef corals, and some green and red algae that fix calcium carbonate into their skeletons. After death, the remains of these organisms are added to the sediment pool by natural erosive processes. The reef front is a very active source of biogenic sediments. Seagrass beds, which have a large associated flora and fauna of organisms with calcareous skeletons, are also important areas of carbonate production. Calcareous sediments are thus composed of:

1. reef skeletal particles,
2. molluscan fragments,
3. coralline (red) and calcareous (green) algae,
4. echinoderm fragments.

The shelves of islands which receive little fluvial influence contain sediments that are primarily derived from these sources.

The skeletal material produced in the reef front, shallow lagoons and seagrass beds is broken up by abrasion, grinding, boring, and ingestion by many reef organisms (such as parrot fish, sea urchins, holothurians, etc.). Physical processes also play an important role in this breakdown. After death, organic binding materials are lost and the large skeletons break into smaller structural units. These processes lead to the formation of gravels, sands, and silts. The fine fraction

may be winnowed and sorted in high energy environments and deposited in lower energy environments.

Cliff and coastal erosion may also contribute significant amounts of sands to the coast. Where the cliffs are composed of sands or other poorly consolidated deposits, and subjected to an intense wave regime, cliff recession may be rapid and occur at rates exceeding 1 m/yr.

Sediment gains to the shelf are offset by losses which occur at varying rates, depending on the environment's energy regime and geomorphology. Invariably, some of the material on the shelf is constantly lost to deep water by cascading thru sediment filled chutes at the shelf edge or by periodic slumping of talus slopes. Often sediments are lost through canyon heads which cut into the shelf. Some are carried away from land and into deep water, by currents. These losses are greater during storms. Figure 2 illustrates graphically the movement of sand along a hypothetical shelf. This figure shows that sand may be impeded from entering the littoral cells by land barriers like reservoirs which trap river-borne sediments. Also shown are sand deposits that may occur in river beds and estuaries, in large coastal plain deposits (including the bottoms of coastal lagoons) and as dunes. In the shelf sand is found as blankets of varying thickness and along the shore it forms beach deposits. Losses through canyon heads are also illustrated.

Sediments deposited on the beach are not static. They move along the shoreline as a result of wave induced littoral drift. Along any shore segment, however, there may be neither growth (accretion) or erosion (loss), if the inputs of sediments compensate for the losses.

There is also a cyclic onshore-offshore movement of beach deposits. This cycle is driven by variation in the wave height and length and in

the direction of the incoming wave trains. Thus over a year, there is and exchange of material between the beach berm and offshore bars. When there are small net losses or gains of materials, the "calm weather" beach profile in succeeding years may be very similar.

3. Impact of Sand Extraction on Beach Processes

It has become very evident that extraction of sand from beaches and nearshore shallow areas is undesirable. Here, human intervention brings an immediate response. We have identified this area, therefore, as a critical zone. It is a zone of high energy and rapid movement of materials. Often the system is delicately balanced and, as soon as materials are removed, the system begins to show effects: erosion and beach recession occur.

As one moves away from this critical zone, in either direction, the response time is increased. Eventually, changes may only become evident after infrequent high energy events like storms.

To minimize adverse impacts on shorelines, we need to tap only stable sand deposits (those in deeper water; those located farthest from shore, or those in which net sand movement if any is away from land). These deposits are not part of the nearshore sediment budget, that is, they are outside of the littoral cells. Care must be taken not to remove sand from structures that provide shelter to inshore systems. For example some offshore bars, shoals or spits act as filters: They allow small waves to pass, whereas large waves break, dissipating their energy. Although these waves may reform, they do so only as waves of very small amplitude and energy.

On the basis of the previous discussion, it is clear that sand extraction must be planned to avoid altering littoral deposition and transport as well as dune-building processes.

The problem, then, lies in accurately defining the seaward limit of sediment motion; the depth beyond which sediments are not likely to be moved inland by waves.

According to Trask (1955), there is little or no movement of sediments below 18 m, and movement in the 9 to 18 m zone is sporadic. Above 9 m and extending to the beach and surf zone, there is a zone of active movement. Harris (1955) described the fate of sediments deposited offshore at a depth of 12 m for beach nourishement. This sand moved very little in a four year span . An analysis of the impinging wave regime at the site, however, demonstrated that only a small percentage of the incoming waves (3.4%) were capable of imparting motion to the sediments.

Thus, although 9 m is often cited as the depth below which sediment motion is negligible, the exact depth is a function of the characteristics of the energy regime in any given coastal sector.

There is evidence from various studies that wave induced bottom velocities between 12 and 30 cm/sec are necessary to initiate sand motion. Assuming that the critical velocity is about 20 cm/sec, I have prepared figure 3 which shows the wave conditions that can produce critical values at the bottom. This figure was prepared based on the relation:

$$U_B = \frac{H\pi}{T \sinh 2\pi d/L} \quad \text{(Inman 1963)}$$

where,

U_B = maximum orbital velocity
H = wave height (meters)
T = wave period (seconds)
d = water depth

Figure 3 shows that long period and large amplitude waves can generate orbital velocities high enough to impart movement to sand size sediments at depths well in excess of 20 m. In general, the more exposed a location and the higher the energy regime, the deeper the littoral cell will extend.

The seaward limit of sediment motion may be estimated by various other methods. These include: (1) the insertion of marked stakes in the bottom to ascertain seasonal changes; (2) repeated high precision bathymetric surveys; (3) the presence of ripples; (4) the presence or absence of filamentous algal covers (usually Schizotrix) or other benthic macrophytes (benthic plants require stable substrates).

The first two techniques are the best methods but they require a long period of observations. It is possible to estimate the seaward limit by a combination of these techniques; for example, by first determining the theoretical maximum depth from wave climate data, and then by on-site observations to confirm or modify the first estimate.

4. Biological Considerations

Once it has been determined with some degree of certainty that the sand deposit is stable, then we must look at the impact of the dredging activity on the nearby biological systems. Potentially, dredging activities can have both primary and secondary (or indirect) effects on marine

ecosystems. For example, dredging will cause direct habitat destruction as reef frameworks are destroyed or undermined. In addition, and secondarily, there is an increase in water turbidity and sedimentation in the vicinity of the operation.

In tropical shallow waters, the marine ecosystems which may be affected most severely by these activities are coral reefs and seagrass beds. As we shall see, both of these systems are very sensitive to increased turbidity and sedimentation levels.

4.1 Coral reefs

Coral reefs are one of the most productive and important biological systems in tropical shallow waters. Reefs are built as a result of the slow but continuous growth of countless minute animals or polyps. Active growth allows the colonies to increase in size upwards and laterally. Eventually, a massive but porous structure is created. This structure with its many crevices and rugged topography serves as a habitat to numerous organisms, many of which are harvested by man.

Although corals are animals, they contain within their tissues microscopic algae. These algae live in intimate association with the coral polyps and assist in the formation of the calcareous skeleton. Light is required for photosynthesis and thus stony corals are mainly limited to well illuminated shallow areas. In transparent, well lit tropical waters stony corals grow actively only in the upper 30-40 meters. Below this zone light levels are too low and become limiting.

4.2 Sedimentation and coral reefs

In waters containing large loads of suspended sediments, light penetration is greatly reduced. The greater the amount of suspended

sediments the less the radiant energy reaching the bottom. This reduces the amount of light available for photosynthesis by the associated endozoic algae and constitutes a severe stress.

However, sediments also directly affect coral polyps. Corals are filter feeders and high sediment loads interfere with their feeding activities. In addition, calcareous sediments which become deposited over coral tissues are known to form an anoxic layer and cause tissue mortality. Studies on three species of framework builders in the Caribbean (Siderastrea siderea, Montastrea cavernosa, and Diploria strigosa) showed that all of these species did not tolerate more than 3 mm of sediment accumulation (Siderastrea polyps were killed by an accumulation of only 1.5 mm). Corals covered by sediments lost their color, possibly due to the expulsion or loss of the endozoic algae; and at the end of 30 hours coral tissues had disintegrated (Kolehmainen).

Corals may rid themselves of smaller amounts of sediments accumulated at their surface by ciliary motion and exudation of mucus. These two strategies work together. Sediment particles are bound to the mucus and are then transported to the edge of the colony by ciliary motion. The mucus may also be cast away and carried by currents. This effort represents an energy expenditure which reduces the amount of energy available for growth and reproduction.

Hubbard and Pocock (1972) studied sediment rejection patterns in corals and found that corals are generally size-specific rejectors. Species with small calices and calical relief can only move finer sediments. Those with larger calices, more septa and greater calical relief (for instance Montastrea annularis and M. cavernosa) are capable of

moving both large and fine particles. All polyps reject sediment by distention through water take-up.

Corals reproduce by the production of microscopic larvae. These eventually settle over hard, sediment-free, stony substrates. Sediment covered substrates are not suitable for attachment. In areas where sedimentation rates are high the former framework structures are covered by algae.

Sedimentation rates within well developed reefs in Puerto Rico are usually less than 10 $mg/cm^2 \cdot day$. In a study performed in western Puerto Rico (Loya 1976) the greatest diversity (H'_n = 2.196) and cover (79%) were associated with low turbidity values (1.5 FTU) and sedimentation (3.0 $mg/cm^2 \cdot day$). Diversity was lower (H'_n = 1.830) and cover reduced (30%) where sedimentation and turbidity were higher (15 $mg/cm^2 \cdot day$ and 5.5 FTU, respectively).

In another site in Puerto Rico (Rogers 1977) sedimentation levels during a two year period in the upper reef varied from 1.1 - 4.6 $mg/cm^2 \cdot day$. In the lower slope, sedimentation rates varied from 4.6 - 21.0 $mg/cm^2 \cdot day$. Suspended sediments during this study varied from 0.5 - 1.9 mg/L and the extinction coefficient (K_e) varied between 0.28 and 0.34. With a K_e of 0.34, the 1% light level is at 13 m depth.

In general, best reef development occurs where sedimentation rates are less than 5 $mg/cm^2 \cdot day$, suspended sediments are less than 1.0 mg/L and the coefficient of extinction is less than 0.17 or turbidity is between 0.3 and 1.0 FTU.

4.3 Sedimentation and seagrass beds

Seagrass beds are another important component of the shallow tropical

coastal environment. They are highly productive, and high standing crops develop under optimum conditions. In shallow, well illuminated waters, seagrasses may form extensive meadows with a standing crop generally in the order of 2 kg/m^2. Standing stocks are determined by light availability. Dense stands occur only in shallow waters that are well illuminated. In deeper water the meadows become very thin. Their depth limit is found between 10 and 15 meters.

Seagrass productivity (8 - 6g dry organic $matter/m^2 \cdot day$) is among the highest measured in the marine environment. Assuming a standing stock of 2 kg/m^2 and a production of 4 kg $O.M./m^2 \cdot yr$, this means that there is a turnover of two times each year. Much of this production is exported although a portion is utilized <u>in situ</u> by many species of fish.

Seagrasses do not develop over unstable bottoms - that is, those subject to intense distruption by wave motion. The wave energy regime determines the distribution and species composition of seagrass beds. The slow succession of species as the bottom is colonized by benthic vegetation leads to sediment stabilization (Fig. 4). Well developed beds have a dense root system which can only be distrupted by storm waves or currents. "Blow-outs" are formed at these times.

Seagrasses develop over a wide range of sediment types. Sediments from seagrass beds may contain large percentages of fines (10 - 40% silts and clays) which may be re-suspended when beds are dredged. Because they buffer water motion they are a suitable depositional environment for fine particles. A diverse and abundant carbonate fixing flora and fauna is normally associated with the seagrass beds and these are very active calcareous sediment producers. Thus, sediments in mature beds may be poorly sorted and contain substantial amounts of fines.

4.4 Importance of reefs and seagrass beds

Coral reefs and seagrass areas have very high sustained yields of fin-fish. In Jamaican reefs this yield has been estimated to be in the order of 4.1 tons/$km^2 \cdot yr$ (Munro 1978). In the Pacific, maximum yields from four atolls was 4.4 tons/$km^2 \cdot yr$ (Lakeba, Fiji, reported by Bayliss-Smith; unpublished MS).

Fish standing crops in reefs have been estimated to be between 38 and 40 tons/km^2 (Randall 1963; Bardach 1959).

Bare sand substrates in the Bahamas, on the other hand, have fin-fish yields in the order of only 0.2 - 0.8 tons/$km^2 \cdot yr$.

Reef and seagrass bed fish and shellfish populations constitute important renewable protein sources for the inhabitants of many islands. Degradation of the reef and seagrass beds by poorly planned or indiscriminate dredging can reduce these fin-fish yields substantially.

5. Impact of Dredging on Biological Systems: A Review

Since both coral reefs and seagrass beds require high light intensities it is not surprising that they are not tolerant of increased turbidities. Dredging operations that produce turbidity plumes and high sedimentation rates can have severe negative impacts.

Levin (1971) and Wood and Johannes (1975) have prepared excellent reviews of the literature related to dredging in reef and seagrass areas. An examination of these reviews indicates that poorly planned and executed projects are a serious hazard to these systems.

For instance, at Johnston Island, 28 km^2 of reef and lagoon were affected by silt laden water, with death of reefs and decreases in fish and echinoderm populations (Brock et al., 1965, 1966). Degradation of

the reefs continued for more than a year after dredging had ceased, due to periodic resuspension of fines by waves.

Marzalek (1981) reported on the impact of a large dredging project (11 million m^3) underway near Miami Beach, Florida. Here before and after studies at the site indicate that scleractinian (stony) corals were found to be tolerant of short term (few days duration) sediment loading only. Marshall and Orr (1931) and Vaughan (1916) had made similar observations. Marzalek also reported that prolonged exposure to both siltation and high turbidity caused loss of zoozanthellae, polyp swelling, abnormal rates of mucus secretion, and, eventually, death.

Amesbury (1981) has reported that although fish assemblages in Truk were not disturbed by high turbidity, fish abundance and diversity were significantly reduced in areas subjected to intense deposition of fine sediments. Similar decreases in fish diversity and abundance were observed as a result of dredging for coral sand in the "Grand Cul de Sac Marin" in Guadeloupe (Galzin 1981).

In Bermuda, the construction of an airport in Castle-Harbor eliminated the dominant coral, Diploria (J. Burnette-Herkes, cited by Johannes, 1975). Similar dredging operations in Guam (Marsh and Gordon, 1974) and Samoa (Sverdloff 1973) also resulted in reef damage. In St. Croix dredging inside Christianstead Harbor caused damage of the barrier reef that shelters the bay. In Puerto Rico dredging for sand in a coastal lagoon killed reefs more than 2 km away from the lagoon inlet.

Unexpected problems may arise when dredging exposes beds of fine sediments which may then resuspended continually by waves. Dredging

of a shallow embayment (Playa Minitas) in the Dominican Republic, to create a bathing beach, removed the overlying sediments and exposed a fine clay that is now persistently resuspended by waves.

Similarly, dredging close to shore in Water Bay, St. Thomas, cut into lenses of clay buried under sand. This dredging also caused beach sands to slump offshore, exposing clays to wave action and resuspension. Here coral reefs were killed by the dredging-induced turbidity and by the turbid waters caused by the exposure of the clay bed (vanEepoel 1969).

In all dredging operations studied in the U.S. Virgin Islands by Grigg and associates (Grigg 1970), fines had remained in suspension reducing visibility for up to two years after the termination of dredging.

Seagrass beds are similarly impacted by dredging although these are more often killed outright by the direct habitat destruction. However, seagrass beds adjacent to dredged areas have been destroyed by high turbidities. For instance, in Lindbergh Bay, St. Thomas, seagrasses used to be well developed even below 10 m (vanEepoel et al. 1971). By 1971, however, after a dredging operation, seagrasses had receded to the shallower portions of the bay and were not found below 1.5 m. A similar situation is known from Brewer's Bay, also in the U.S. Virgin Islands (Grigg et al., undated).

Waterborne fines originating from a dredging operation at the Hess oil terminal in St. Croix (U.S. Virgin Islands) caused a turbid plume that extended more than 5 km downcurrent. The reduced light levels were responsible for the partial elimination of seagrass stands along the affected strip. Loss of the seagrasses resulted in enhanced

beach erosion due to higher wave energy levels and loss of sediment stability (Island Resources Foundation 1977).

6. Recovery of Damaged Systems

The time required for a reef or seagrass bed to recover from the impact of dredging is dependent on the magnitude of the stress and the changes effected. Reefs are fragile but resilient systems. Most reef areas are subjected to periodic widespread destruction by intense waves created in cyclonic disturbances. This mechanical damage is usually repaired within a period of a few decades and reef function is not irrevocably impaired. Residual stresses may, however, chronically slow down or impede natural restoration. Fine sediments covering the reef surfaces will impede or reduce the rates of larval settlement. Studies in Guam have shown that recruitment of corals is more a function of the number of cleared patches than the size of the patch (Birkeland and Rowley 1981). Loya (1975) notices that recovery in a chronically stressed reef flat was by regeneration of old colonies rather than by colonization. This slowed down the rate of recovery of the system dramatically. Recovery is often faster when remnant patches of coral remain within the disturbed area.

Assuming no residual stresses (eg. resuspended fines, sediment covered surfaces, etc.), reef frameworks may be recolonized within the span of a few decades after a single acute stress episode. Seagrass beds, however, may not recover as readily. Dredging in sandy bottoms often significantly increases depth. Craters formed by hydraulic dredges may extend to 20 m, from original depths of 2 to 5 meters. Often turbidity remains high in these holes and the bottom may be

filled with very fine calcareous muds.

Since the amount of radiant energy reaching the bottom is greatly reduced by the greater depth and higher turbidity these holes may remain unvegetated. Because of the steep slopes there is frequent slumping and accumulation of detrital material. In geneal, the destruction of seagrass beds is irreversible when the depth is increased much below 10 m.

Cratering of this type in areas of restricted circulation may also lead to the formation of anoxic basins. This happened in Puerto Rico, where dredging for sand in coastal lagoons increased depth from 2 m to 18 m. As a result, the waters are persistently anoxic below 2 m. These basins serve as traps for organic materials which decompose and consume the oxygen in the trapped saline waters. Since the lagoons receive fresh water from inland sources, there is a density stratification and stagnation. The BOD_5 in the bottom water often exceeds 200 mg/L and NH_4 as (N) may be in excess of 15 mg/L (Ellis 1976). Secchi disc depths in these lagoons are usually less than one meter (0.6 m) for an equivalent extinction coefficient (K_e) of 2.83 - 1.70.

7. Dredging Methods

The type of dredge influences the potential impact of a dredging operation. Dredges are of two types, mechanical and hydraulic. Mechanical dredges are of the bucket, dragline, dipper or ladder type. They are basically excavating machines where the material is discharged alongside the dredge in barges. Mechanical dredges are usually limited to shallow depths and small projects. They cause severe disturbance of the bottom and a great deal of turbidity.

Hydraulic dredges use powerful centrifugal pumps that discharge

the dredged material into hoppers within the dredge, into barges, or pump it ashore. Hydraulic dredges may be of the plain-suction type, often with powerful water jets installed at the end of the suction pipe to loosen the material. This type of dredge is most efficient when stationary, dredging a hole into which sand flows.

Another type of hydraulic dredge is the draghead dredge. This is a plain-suction dredge equipped with suction head at the end of the intake. The drag is held against the bottom while the dredge is in motion. These dredges are self propelled and have molded hulls. The dredge material is pumped and retained aboard. The capacity of these dredges is between 380 and 6,000 m^3 and it may operate in waters slightly over 30 m deep. When the hoppers are full the dredge must stop dredging and carry the material ashore.

The next type of dredge is the most widely used today and the most versatile. This is the cutterhead dredge. These dredges are equipped with a hydraulically driven cutter head at the end of the suction pipe. The cutter head rotates and cuts into the bottom material loosening it and allowing it to be sucked into the intake pipe.

Hydraulic dredges have a greater capacity in terms of volume of material and depth. If dredging is done from an anchored dredge large deep craters may be formed; the slope of the crater walls is near 30° and they are unstable, frequently slumping.

A trailing dredge on the other hand covers a large area but forms only shallow trenches.

Hopper dredges must dewater the slurry of sand and sea water brought aboard. The coarse sediments remain in the barge while the sea water and fines are drained overboard. This creates a turbid plume

behind the dredge. Slotta et al. (1973) reported turbidity levels of 80 Jackson Turbidity Units (JTU) before dredging and more than 400 JTU in the wake of a hopper dredge.

This plume containing fines may disperse and cover large areas. This is also true for all types of dredging activities that cause significant disruptions of the bottom, especially where fines constitute a large percentage of the sediments. This is evident from table 1, where the sinking rates for various sized particles is shown. Assuming a current of 0.6 km/hr, it may be seen that fines may travel many kilometers before settling.

8. Conclusions

Shelf sand deposits are definitely a solution to the demand for aggregate in territorially limited islands. Because of the intense physical processes characterizing nearshore areas and the highly complex and productive ecosystems found there, it is necessary to plan the activity so as to cause the least irreversible damage to the environment.

The following guidelines are suggested to minimize the impact of these operations in the marine coastal environment:

1. Allow sand dredging within the littoral sand movement cell only for beach nourishment.

2. Prohibit sand extraction from beaches, active dunes, and river mouths.

3. Conduct regional surveys to identify the quality, quantity,

and geographic position of suitable sand deposits. Ascertain by coring the quality of the underlying material to the proposed dredging depth.

4. Identify those sand bodies with greater potential for extraction because of their greater stability and minimal silt content.

5. At these sites, conduct studies to ascertain wave, wind, and tide-induced current patterns. Determine base levels for turbidity, transparency, and suspended sediments.

6. Map the location of reefs and seagrass beds in the vicinity. Avoid dredging in bottoms containing seagrass stands or in the immediate vicinity of coral reefs.

7. Carefully select stockpiling areas ashore. These areas must be large enough to accommodate the sand, processing equipment and support and maintenance activities. Avoid filling mangrove or other wetland areas for this purpose.

8. Monitor the dredging activity to ascertain that minimal amounts of sediments are suspended. If possible select dredging equipment that will minimize resuspension of sediments.

9. In some instances, it may be desirable to dredge only a selected times when the sediments may be carried away from vulnerable systems.

10. When possible utilize sands obtainable from port development

projects. These sediments could be stockpiled for later use.

Because of the limited and fragile nature of island ecosystems, it is imperative that activities that may have severe environmental impact be carefully planned and their impact carefully assessed. If it is advisable to proceed, then the operation must be carefully executed and monitored.

Responsible planning, giving due consideration to the constraints imposed by physical and biological characteristics at each site should allow the successful exploitation of underwater sand resources with the least risk and least conflict with other uses of the shelf.

9. Literature Cited

Amesbury, S. S. 1981. Effects of turbidity on shallow-water reef fish assemblages in Truk, Eastern Caroline Islands. Fourth International Coral Reef Symposium. Marine Sciences Center, Univ. of the Philippines. Abstract.

Bardach, J. E. 1959. The summer standing crop of fish on a shallow Bermuda reef. Limnol. Oceanogr. 4:77-85.

Birkeland C., and D. Rowley. 1981. Coral recruitment patterns at Guam. Fourth International Coral Reef Symposium. Marine Sciences Center, Univ. of the Philippines. Abstract.

Brock, V. E., R. S. Jones, and P. Helfrich. 1965. An ecological reconnaissance of Johnston Island and the effects of dredging. Annual Report to U. S. Atomic Energy Commission, Hawaii Marine Laboratory Tech. Rept. 5.

Brock, V. E., W. van Heukelem, and P. Helfrich. 1966. An ecological reconnaisance of Johnston Island and the effects of dredging. Hawaii Inst. Mar. Biol. Tech. Rept. 11. 56 p.

Ellis, S. R. 1976. History of dredging and filling of lagoons in the San Juan Area, Puerto Rico. U. S. Geological Survey Water Resources Investigations. 38-76.

Galzin, R. 1981. Some effects of coral sand dredging in the lagoon of the "Grand Cul de Sac Marin" Guadeloupe - French West Indies. Fourth International Coral Reef Symposium. Marine Sciences Center, Univ. of the Philippines. Abstract.

Grigg, D. I. 1970. Some effects of dredging on water quality and coral reef ecology. Caribb. Cons. Assoc. Newsl. 1:22-27.

Grigg, D. I., R. F. Crean, and R. P. VanEepoel. (Undated). Marine environment of Brewer's Bay, St. Thomas, V. I., with a summary of recent changes. Caribb. Res. Inst. Water Pollution Rept. No. 15.

Harris, R. L. 1955. Restudy of test shore nourishment by offshore deposition of sand, Long Branch, New Jersey. TM-62, U. S. Corps of Engineers Beach Erosion Board, Wash., D. C.

Hubbard, J. A. E. B., and Y. P. Pocock. 1972. Sediment rejection by recent scleractinian corals: a key to palaeo-environmental reconstruction. Geologischen Rundschau. Band 61:2, 598-626, Ferdinand Enke Verlag, Stuttgart.

Inman, D. L. 1963. Ocean waves and associated currents. Chapter III in F. P. Shepard "Submarine Geology." Harper and Row, N. Y. and London. 557 p.

Island Resources Foundation. 1977. Marine Environments of the Virgin Islands. Technical Supplement No. 1, Virgin Islands Planning Office, Coastal Zone Management Program.

Johannes, R. E. 1975. Pollution and degradation of coral reef communities. In: E. J. F. Wood of R. E. Johannes, ed., Tropical Marine Pollution. Elsevier Scientific Pub. Co. Oxford, England. P. 13-51.

Kolehmainen, S. F. (Manuscript). Siltation experiments on corals in situ. Puerto Rico Nuclear Center. Mayaguez, Puerto Rico. 13 p.

Levin, J. 1971. A literature review of the effects of sand removal on a coral reef community. UNIHI-SEAGRANT-TR-71-01.

Loya, Y. 1976. Effects of water turbidity and sedimentation on the community structure of Puerto Rican corals. Bull. Mar. Sc. 26:450-466.

Loya, Y. 1975. Possible effects of water pollution on the community structure of Red Sea Corals. Marine Biology 29, 177-185.

Marsh, J. A., Jr. and G. D. Gordon. 1974. Marine environmental effects of dredging and power plant construction. Univ. Guam. Mar. Lab. Tech. Rept. 8. 56 p.

Marshall, S. M., and A. P. Orr. 1931. Sedimentation on Low Isles Reef and its relation to coral growth. Great Barrier Reef Expedition 1928-1929. Sci. Rep. Brit. Mus. (N. H.) Vol. 1 (5):94-133.

Marszalek, D. S. 1981. Impact of dredging on a subtropical reef community, Southeast Florida Coast, U. S. A. Fourth International Coral Reef Symposium. Marine Sciences Center, Univ. of the Philippines. Abstract.

Munro, J. L. 1978. Actual and potential fish production from the coral-line shelves of the Caribbean Sea. In: Cooperative Investigations of the Caribbean and Adjacent Regions II. FAO Fish. Rept. 200, pp. 301-321.

Randall, J. E. 1963. An analysis of the fish populations of artificial and natural reefs in the Virgin Islands. Carib. J. Sci. 3:31-48.

Rogers, C. S. 1977. The response of a coral reef to sedimentation. Ph. D. Dissertation. Univ. of Florida, Gainesville, Fla. 196 p.

Slotta, L. S., C. K. Sollitt, D. A. Bella, D. R. Hancock, J. E. McCauley, and R. Parr. 1973. Effects of hopper dredging and in channel spoiling in Coos Bay, Oregon. Oregon State Univ., Corvallis. 141 pp.

Sverdloff, S. N. 1973. The status of marine conservation in American Samoa. In: Regional Symposium on Conservation of Nature - Reefs and Lagoons. South Pacific Commission, pp. 23-28.

Trask, P. D. 1955. Movement of sand around southern Californian promontories. Beach Erosion Board TM-76, U. S. Corps of Engineers, Beach Erosion Board, Wash., D. C.

VanEepoel, R. P. 1969. Effects of dredging in Water Bay, St. Thomas. Caribbean Research Institute, 8 p.

VanEepoel, R. P., D. I. Grigg, R. W. Brody, and W. Raymond. 1971. Water quality and sediments of Lindbergh Bay, St. Thomas. Caribb. Res. Inst. Water Pollution Rep., No. 11:33 pp.

Vaughan, T. W. 1916. The results of investigations of the ecology of the Floridian and Bahaman shoal-water corals. Proc. Nat. Acad. Sc. 2(2):95-100.

Wood, E. J. F. and R. E. Johannes. 1975. Tropical Marine Pollution. Elsevier Scientific Pub. Co. Oxford, England.

Fig. 1
CO'.STAL ZONE SAND BUDGET

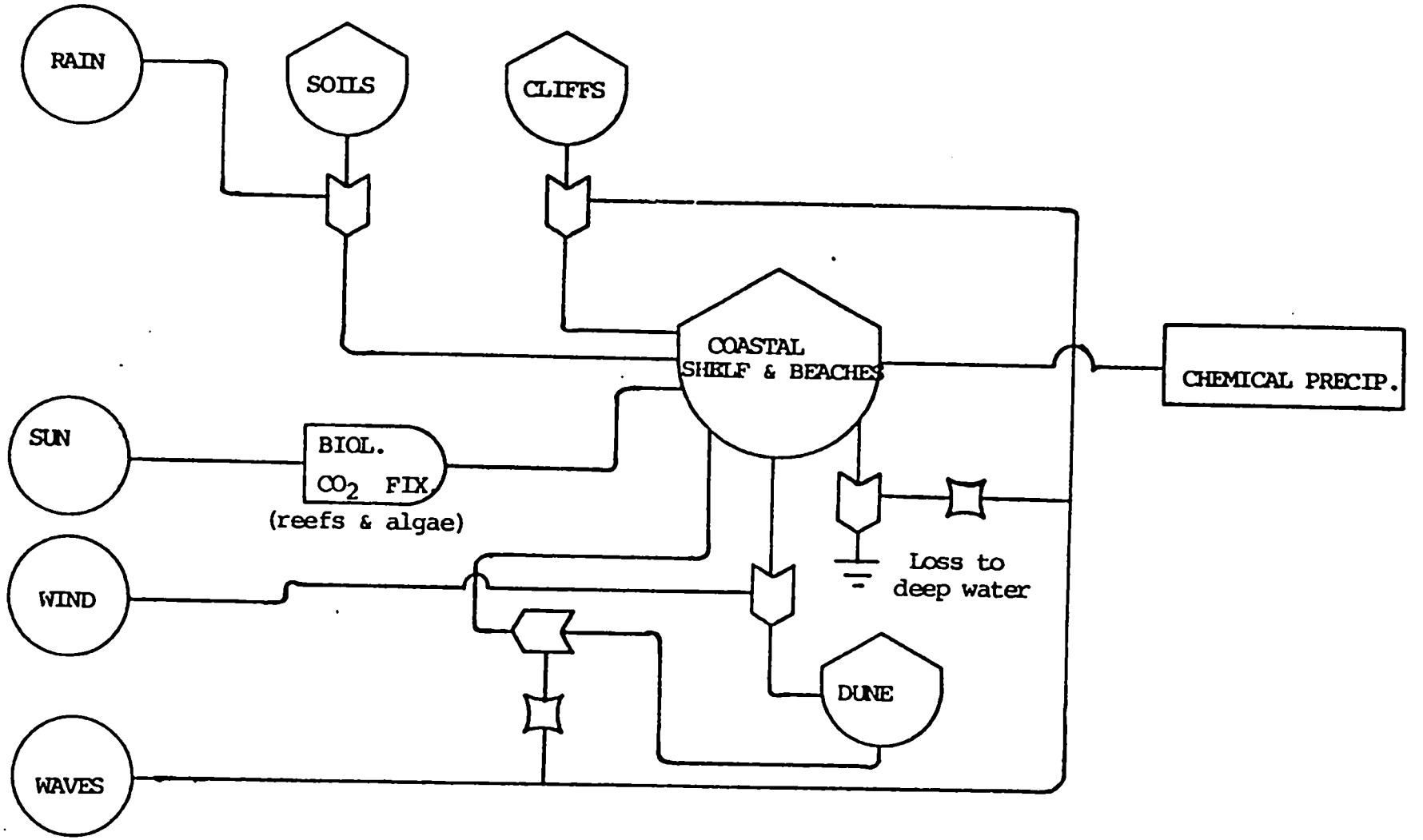

Fig. 2

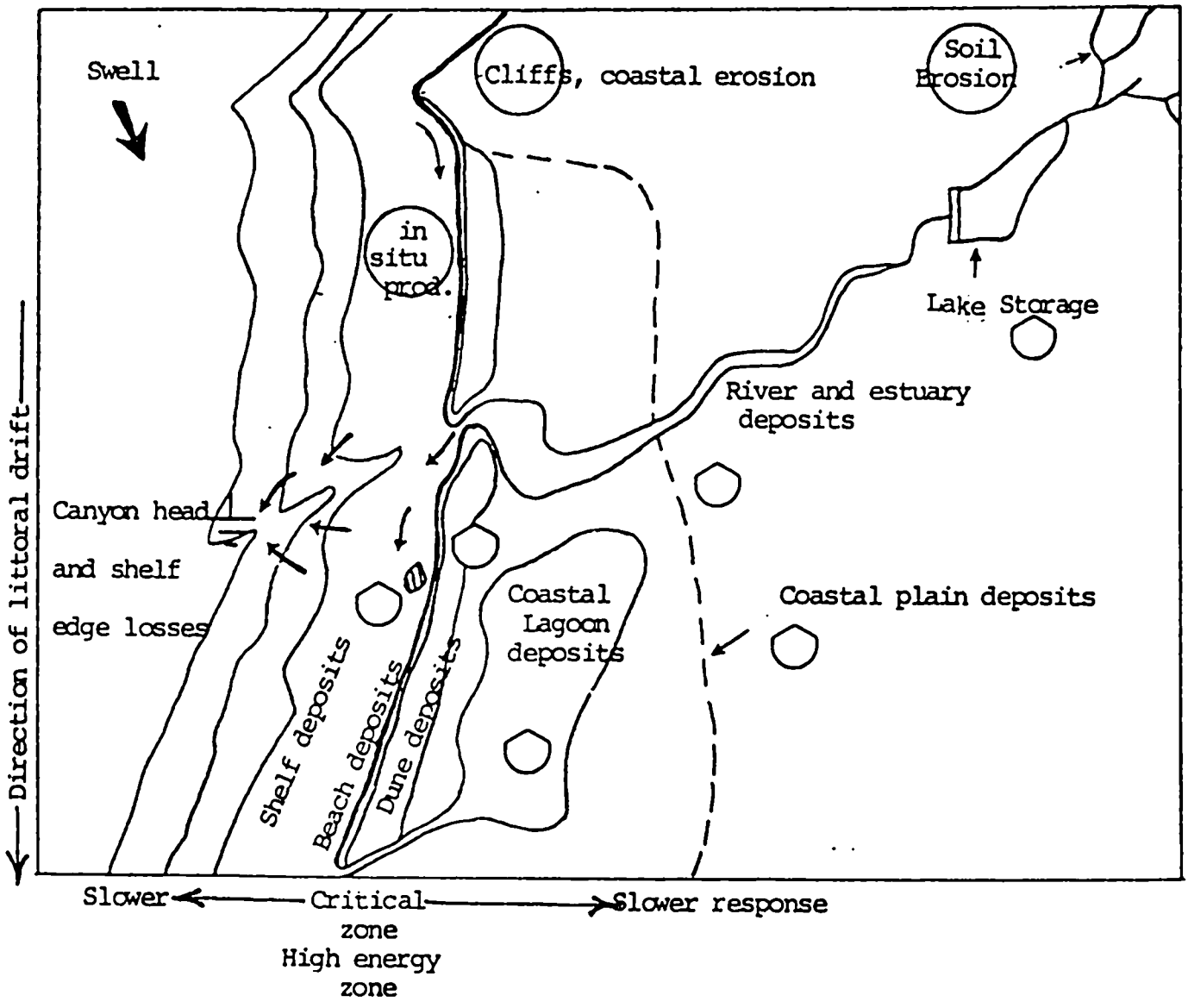

Diagram showing source areas, sinks and storages of sand along a coastal segment.

Figure 3

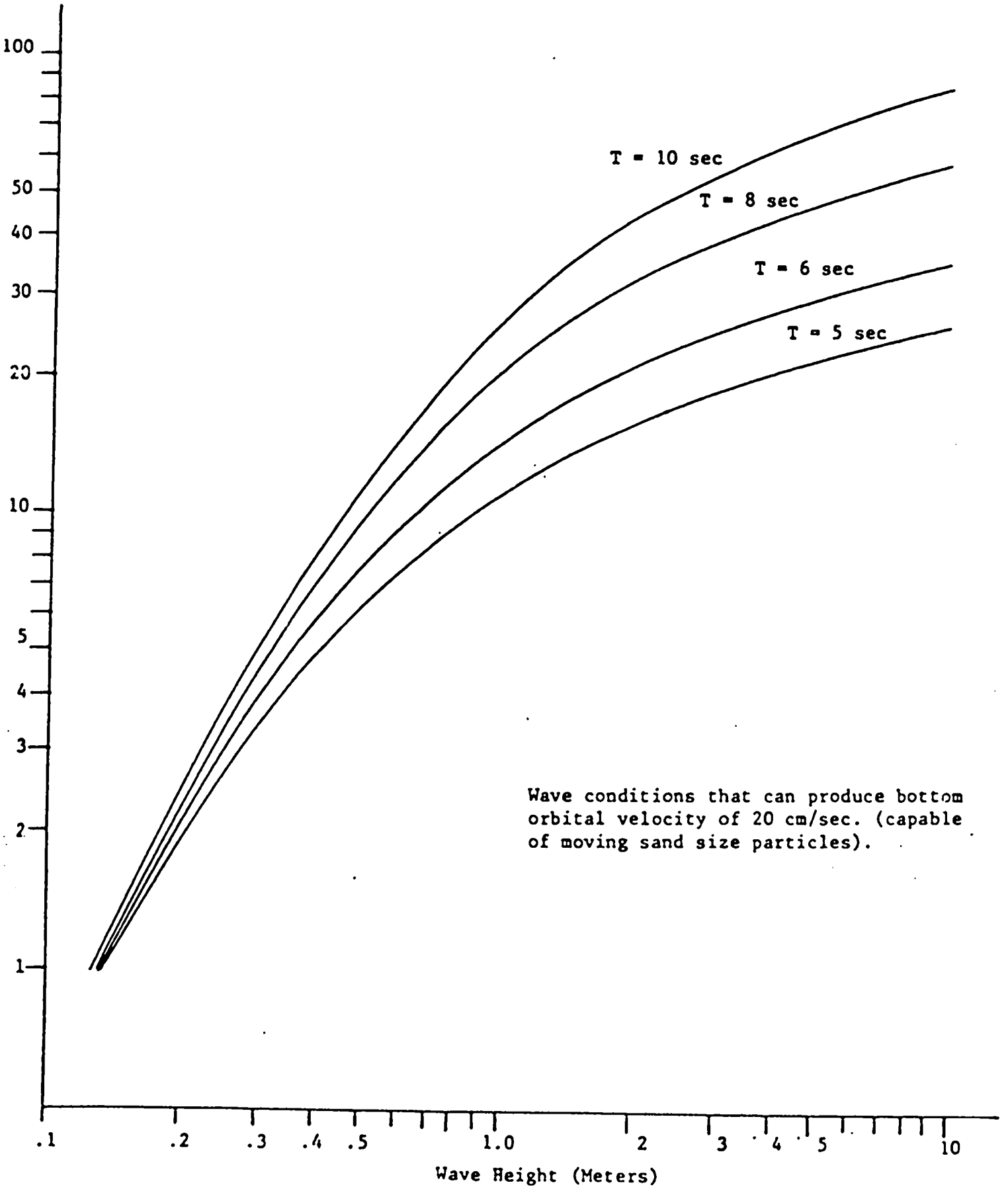
100
50
40
30
20
10
5
4
3
2
1
T = 10 sec
T = 8 sec
T = 6 sec
T = 5 sec
Wave conditions that can produce bottom orbital velocity of 20 cm/sec. (capable of moving sand size particles).
.1
.2
.3
.4
.5
1.0
2
3
4
5
10
Wave Height (Meters)

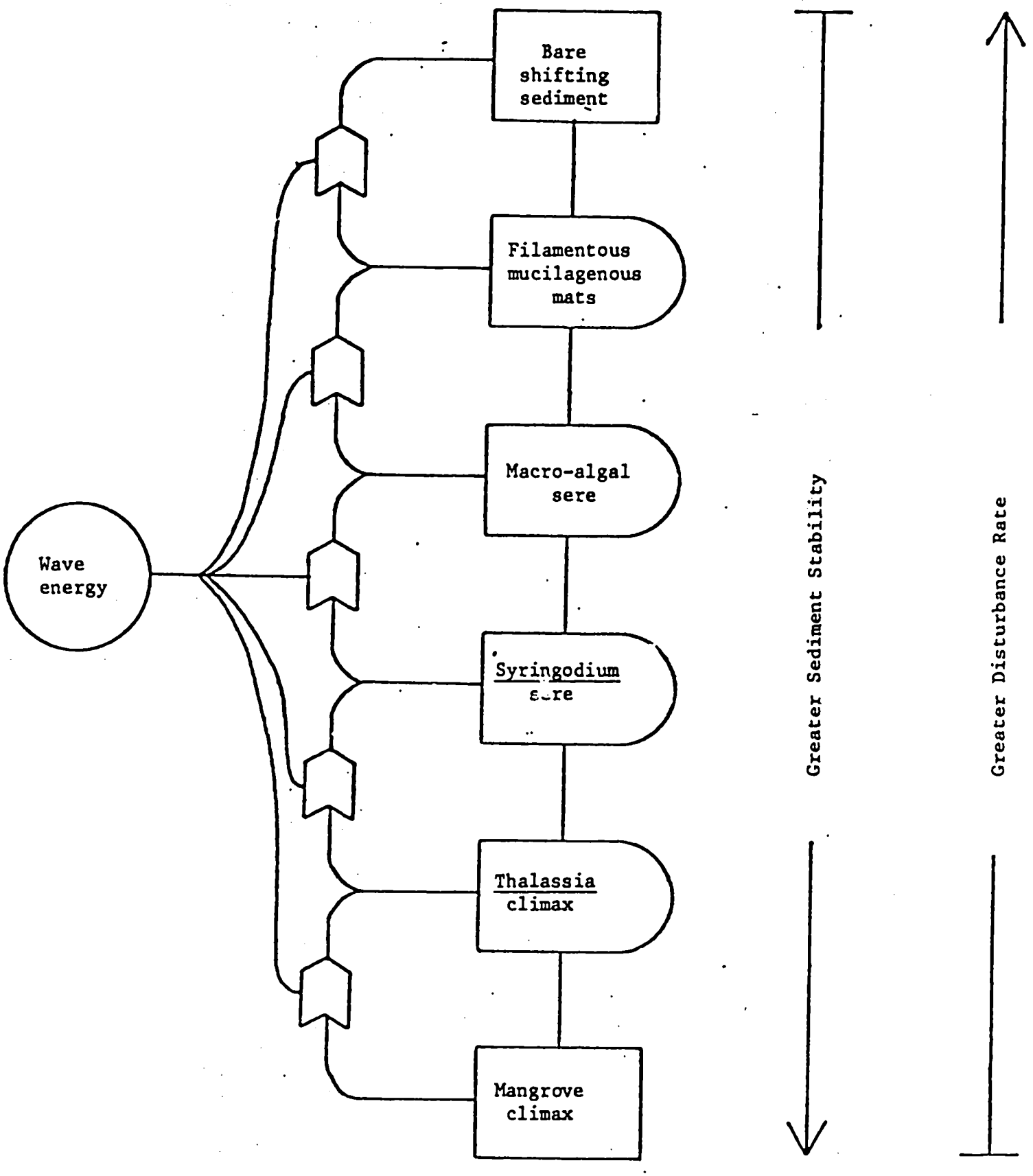
Wave energy
Bare shifting sediment
Filamentous mucilagenous mats
Macro-algal sere
Syringodium sere
Thalassia climax
Mangrove climax
Greater Sediment Stability
Greater Disturbance Rate

Figure 4

TABLE 1

DIAMETER		SINKING RATE	TIME TO SINK 20 M	DISTANCE OF TRAVEL *
(MM)	(ø)	(M/HR)	(HRS)	(KM)
1.0	0	238	0.084	.05
0.5	1	158	0.126	.08
0.1	3.3	29	0.690	.4
0.03	5.06	3.2	6.25	3.7
0.008	7.00	0.18	111	66.7

SETTLING RATES AND DISTANCE OF TRAVEL (A 0.6 KM/HR DRIFT) FOR DIFFERENT SIZED PARTICLES. THESE SETTLING RATES ARE FOR QUARTZ SPHERES, CALCAREOUS PARTICLES, LIGHTER IN DENSITY AND CONTAINING VOIDS HAVE MUCH SMALLER SINKING RATES.