PN-AAM-269
ISN=15709

U.S. Agency For International Development

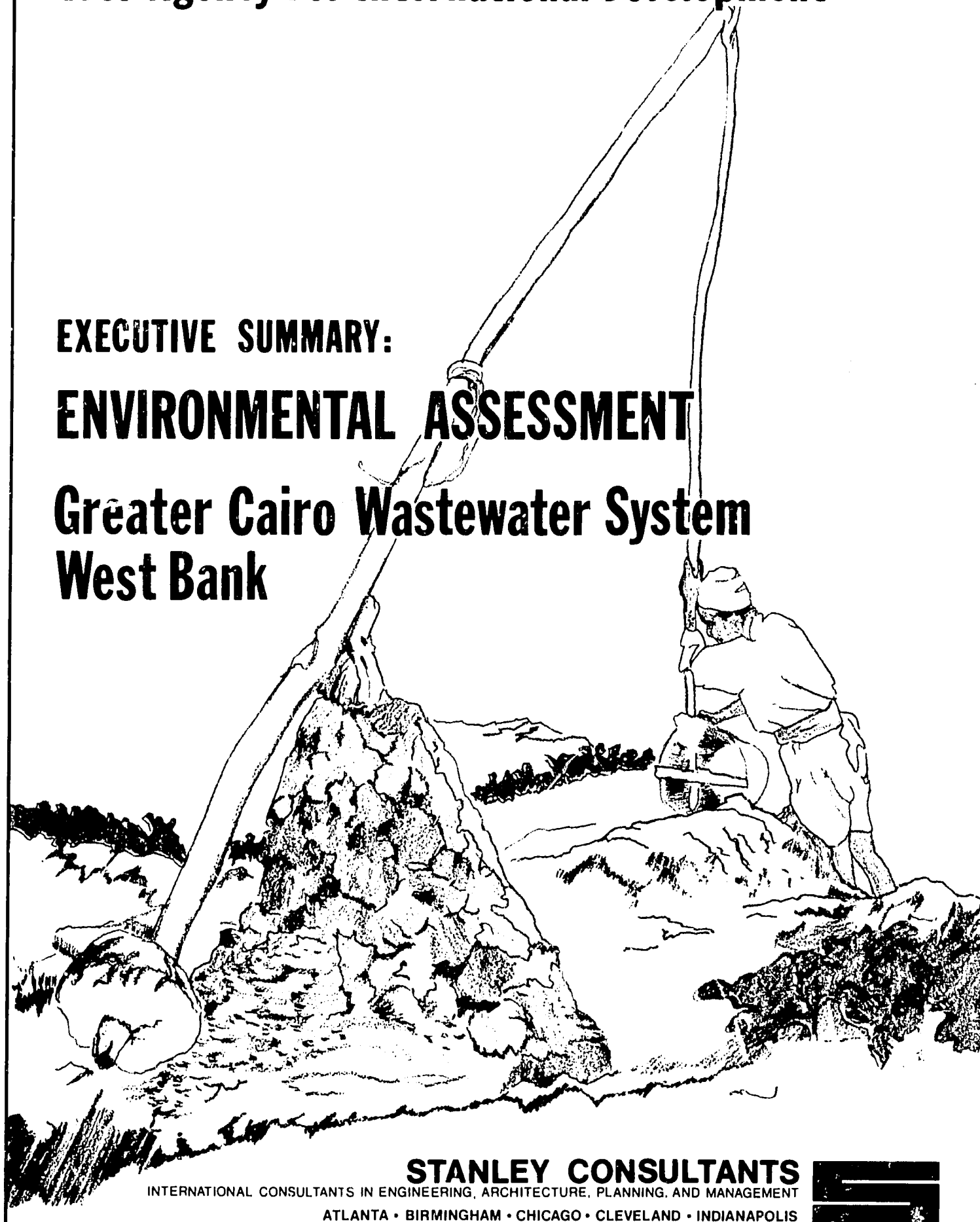

EXECUTIVE SUMMARY:

ENVIRONMENTAL ASSESSMENT

Greater Cairo Wastewater System
West Bank

STANLEY CONSULTANTS
INTERNATIONAL CONSULTANTS IN ENGINEERING, ARCHITECTURE, PLANNING, AND MANAGEMENT
ATLANTA • BIRMINGHAM • CHICAGO • CLEVELAND • INDIANAPOLIS
MUSCATINE • WASHINGTON, DC • JORDAN • LIBERIA • MALAYSIA • PHILIPPINES

STANLEY CONSULTANTS, INC.

SUITE 200
2600 CENTURY PARKWAY, NE
ATLANTA, GEORGIA 30345
TELEPHONE: 404/325-5858

September 30, 1982

U.S. Agency for International Development
Bureau of Near East
Washington, D.C. 20523 U.S.A.

RE: Environmental Assessment - West Bank
Greater Cairo Wastewater Project (AID/OTR-C-1628, W.O. No. 9)

Attention: Mr. Stephen F. Lintner, Bureau Environmental Coordinator (AID/Washington)
Mr. Frederick Guymont, Project Officer (AID/Cairo)

Gentlemen:

We are pleased to present our "Executive Summary" which provides an overview of the Environmental Assessment of the West Bank portion of the Greater Cairo Wastewater Project.

Supplementing and providing the basis for this document is our "Main Report".

Respectfully submitted,

STANLEY CONSULTANTS, INC.

R. H. Anderson, Vice President
Contracting Officer

R. L. Thoem, P.E.
Project Manager

RHA/RLT:sjs:8098

U.S. Agency For International Development

EXECUTIVE SUMMARY:

ENVIRONMENTAL ASSESSMENT

Greater Cairo Wastewater System
West Bank

September, 1982

STANLEY CONSULTANTS
INTERNATIONAL CONSULTANTS IN ENGINEERING, ARCHITECTURE, PLANNING, AND MANAGEMENT
ATLANTA • BIRMINGHAM • CHICAGO • CLEVELAND • INDIANAPOLIS
MUSCATINE • WASHINGTON, DC • JORDAN • LIBERIA • MALAYSIA • PHILIPPINES

TABLE OF CONTENTS

Page

CHAPTER 1 - PURPOSE AND NEED

AID Requirements 1
Potential Significant Inpacts 1
Proposed Improvement Program 1

CHAPTER 2 - ENVIRONMENTAL SETTING

Study Area 4
Population 4
Land Use 5
Potable Water Supply 5
Wastewater Flows and Characteristics 6
Industrial Wastewater 6
Wastewater Treatment and Disposal 7
Wastewater Collection 9
Water Quality 9
Soil Characteristics 10
Public Health 10
Institutional 11
Food Resources 12
Energy Resources 12

CHAPTER 3 - ALTERNATIVE WASTEWATER MANAGEMENT PLANS

No Action 14
Collection Options 14
Treatment Options 15
Disposal Options 16
Alternative Plans for Environmental Assessment 16
Collection 16
Alternative A - No Action (Existing System) 16
Alternative B - Complete Collection and Limited Conveyance (Minimum Treatment and Drain Disposal). 19
Alternative C - Complete Collection and Conveyance (for Alternative 1-6) 20
Treatment and Disposal
Alternative C-1 - Secondary Treatment and Drain Disposal 21
Alternative C-2 - Secondary Treatment with Partial Land Disposal 21
Alternative C-3 - Primary Treatment with Drain Disposal 22
Alternative C-4 - Primary and Land Treatment/ Disposal 23

TABLE OF CONTENTS (cont.)

	Page
Alternative C-5 - Desert Lagoon Treatment with Land Disposal	24
Alternative C-6 - Desert High Rate Infiltration Treatment with Land Disposal	25
CHAPTER 4 - ENVIRONMENTAL CONSEQUENCES OF COLLECTION ALTERNATIVES	
Criteria for Alternative Comparison	26
Economics	27
Reliability	29
Public Health	29
Institutional/Social	31
Summary Comparison	31
CHAPTER 5 - ENVIRONMENTAL CONSEQUENCES OF TREATMENT AND DISPOSAL	
Criteria for Alternative Comparison	34
Economics	36
Reliability	36
Public Health	39
Institutional/Social	39
Summary Comparison	39

TABLES

Number	Title	Page
1	AMBRIC Proposed First Stage Improvement Program Costs (1985-86 Completion)	3
2	Current and Projected Population	4
3	Projected Year 2000 Land Use	5
4	Projected West Bank Wastewater Flows	6
5	Summary of Collection, Treatment and Disposal Alternatives	17
6	Life-Cycle and Annual Costs for Collection Alternatives	27
7	Economic Comparison of Collection Alternatives	28
8	Reliability Comparison of Collection Alternatives	30
9	Public Health Comparison of Collection Alternatives	31
10	Institutional/Social Comparison of Collection Alternatives	32
11	Summary Comparison of Collection Alternatives	33

TABLE OF CONTENTS (cont.)

TABLES (cont.)

Number	Title	Page
12	Economic Costs for Alternatives	35
13	Economic Comparison of Treatment-Disposal Alternatives ..	37
14	Reliability Comparison of Treatment-Disposal Alternatives	38
15	Public Health Comparison of Treatment-Disposal Alternatives	40
16	Institutional/Social Comparison of Treatment-Disposal Alternatives	41
17	Summary Comparison of Treatment-Disposal Alternatives ...	42

FIGURES

Number	Title	Page
1	Proposed First Stage Works (AMBRIC).....Follows	2
2	Greater Cairo Area .....Follows	4
3	Cairo Regional Area .....Follows	4
4	Alternative A - No Action (Existing System)	19
5	Alternative B - Complete Collection and Limited Conveyance (Minimum Treatment and Drain Disposal)	20
6	Alternative C - Complete Collection and Conveyance (For Alternatives 1-6)	21
7	Alternative C-1 - Secondary Treatment with Drain Disposal .....Follows	21
8	Alternative C-2 - Secondary Treatment with Land Disposal .....Follows	21
9	Alternative C-3 - Primary Treatment with Drain Disposal..	22
10	Alternative C-4 - Primary and Land Treatment/Disposal....	23
11	Alternative C-5 - Desert Lagoon Treatment with Land Disposal	24
12	Alternative C-6 - Desert High Rate Infiltration Treatment with Land Disposal	25

TABLE OF CONTENTS (cont.)

ARABIC SUMMARY

	Page
Summary	AS-1
Contents	AC-1
Title Page	--

CHAPTER 1 - PURPOSE AND NEED

AID Requirements

The provisions of 22 CFR 216, "AID Environmental Procedures" (October 23, 1980) require the United States Agency for International Development (AID) to prepare environmental assessments for all projects which could potentially have a "significant effect" on the environment. The enormous size and scope of the wastewater management improvement program for greater Cairo necessitates completion of an environmental assessment.

The objective of an assessment is to identify potential environmental consequences of the proposed project to ensure initiation of appropriate safeguards by AID and the host country prior to a decision to proceed.

Contrary to the standardized procedures followed for domestic U.S.-projects, the scope of environmental assessments conducted in foreign locations are dictated by the potential significant effects expected from the project.

Potential Significant Impacts

The scope of this environmental assessment, as initially outlined by AID, and refined through a "Scoping Session" held in Cairo on November 4, 1981, focuses on assessment of the following potential significant effects:

1. Sequence of facilities construction.
2. Alternatives for wastewater treatment.
3. Alternatives for effluent disposal.

Proposed Improvement Program

American British Consultants (AMBRIC) has been under contract with the General Organization for Sewerage and Sanitary Drainage (GOSSD) and is now being directed by the Organization for Execution of the Greater Cairo Wastewater Project (CWO) to develop a program designed to rehabilitate and expand the greater Cairo wastewater system. The Cairo system

is divided into two major areas by the Nile River: East Bank and West Bank. Funds are being sought from AID to implement the wastewater management plan on the West Bank and this study considers only that area.

The wastewater facilities in Cairo have been neglected for many years and have not kept pace with the rapid urban growth. AMBRIC has proposed a large scale program which will require an extensive construction, operation and maintenance effort to solve existing problems and avoid future ones. The planned improvements will be accomplished in several stages and the first-stage, high-priority projects are those of concern to this environmental assessment. Later project stages will expand service to new areas or provide increased capacities for first-stage facilities.

Figure 1 shows the general layout and location of West Bank first-stage projects and major portions of the existing system. The main goals for the proposed program to relieve existing overloaded primary collector sewers, provide sewer service to areas which currently (or in the near future) lack such facilities, improve treatment by upgrading the existing Zenein wastewater plant and constructing new facilities at Abu Rawash.

Table 1 summarizes the capital costs of the proposed first stage improvement program. The improvements are categorized by primary funding source into Group A and Group B projects for foreign funding and Egyptian funding, respectively. About 30 percent of the total 1.2 billion Egyptian pounds (LE) will be spent for wastewater system improvements on the West Bank.

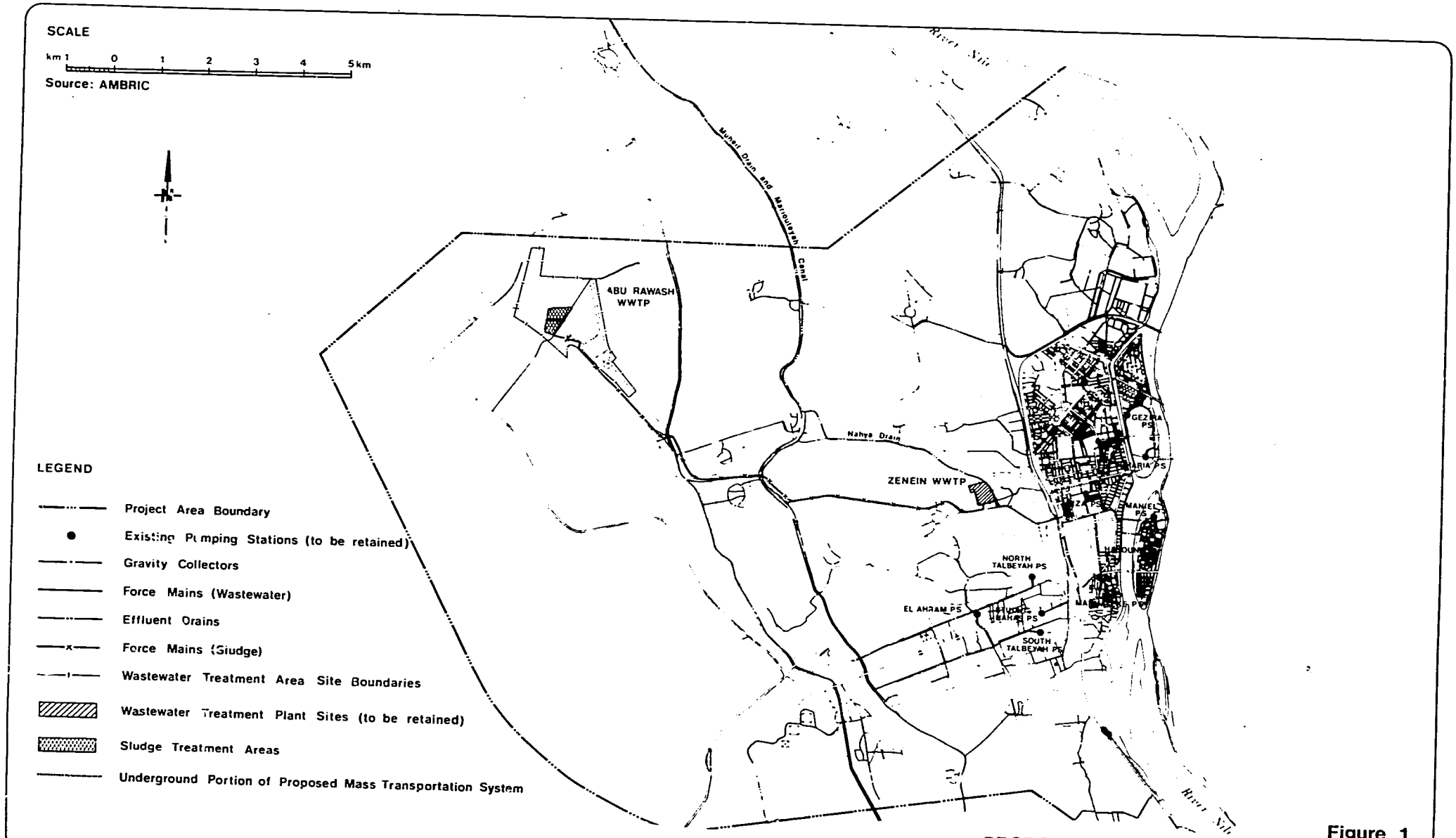

Figure 1
PROPOSED FIRST STAGE WORKS (AMBRIC)

STANLEY CONSULTANTS

TABLE 1

AMBRIC PROPOSED FIRST STAGE IMPROVEMENT PROGRAM COSTS (1985-86 Completion)

		1980 Estimated Cost ** (LE 10^6)	
WEST BANK			
Group A Projects (Requiring Significant Foreign Funding)			
North West Project			
Primary Drains & Pump Stations to Abu Rawash	37.0		
Secondary Collectors & Branch Sewers	46.7		
Subtotal:		83.7	
Giza Relief Collector Project		15.7	
Pyramids Collector Project			
Primary Drains & Pump Stations to Abu Rawash	30.0		
Secondary Collectors & Branch Sewers	18.5		
Subtotal:		48.5	
Abu Rawash Treatment Facilities		90.4	
Subtotal - West Bank Group A Projects:			238.3
Group B Projects (Primary Egyptian Funding)			
Zamalek Project		1.5	
West Bank Effluent Disposal		5.0	
Secondary Sewers & House Connections (estimate)		105.7	
Subtotal - West Bank Group B Projects:			112.2
TOTAL WEST BANK - GROUP A & B PROJECTS:			350.5
EAST BANK			
Group A Projects			
Principal Tunnel Project		169.8	
Main East Bank Project		252.8	
Subtotal - East Bank Group A Projects:			422.6
Group B Projects			
Maadi & Nasr City Projects		73.7	
Berka & Shoubra el Kheima Plants		127.4	
East Bank Effluent Disposal		25.9	
Secondary Sewers & House Connections (estimate)		161.0	
Subtotal - East Bank Group B Projects:			388.0
TOTAL EAST BANK - GROUP A & B PROJECTS:			810.6
EAST & WEST BANKS			
General Group A Projects			
Rehabilitation of Pumping Stations		32.1	
Rehabilitation of Zenein		16.7	
Training		4.2	
TOTAL - GENERAL GROUP A PROJECTS			53.0*
TOTAL EAST AND WEST BANK FIRST STAGE PROJECTS:			1214.1

* Excludes any capital costs required for sewer cleaning programs.
** Approximately $U.S. 1,734,000,000 using 0.7 LE per U.S. $.
Source: AMBRIC "Design Inception Report", June 1981.

8098

CHAPTER 2 -- ENVIRONMENTAL SETTING

Study Area

The study area includes only the West Bank portion of the greater Cairo wastewater project area. The entire project area, shown in Figure 2, encompasses approximately 875 square kilometers.

Most of the developed West Bank area is within the Governorate of Giza. The western part of the study area extends into undeveloped areas beyond the Alexandria-Cairo desert road.

Figure 3 shows Cairo with respect to geographical features of the surrounding region, including where the River Nile splits into the Rosetta and Damietta Branches forming the delta region prior to discharging into the Mediterranean Sea.

Population

The 1980 population for the total project area was estimated at 7.7 million and the population of the study area was estimated at 1.8 million. Population of greater Cairo has grown steadily, but the sharpest increases have taken place in the last decade. Expected population growth is as summarized in Table 2.

TABLE 2

CURRENT AND PROJECTED POPULATION

	Population (1000)		
Year	West Bank Study Area	Project Area	Greater Cairo Area
1980	1,806	7,417	9,074
1985	2,088	8,631	10,572
1990	2,350	10,076	12,279
2000	3,204	13,586	16,319

Source: AMBRIC "Design Inception Report", June 1981.

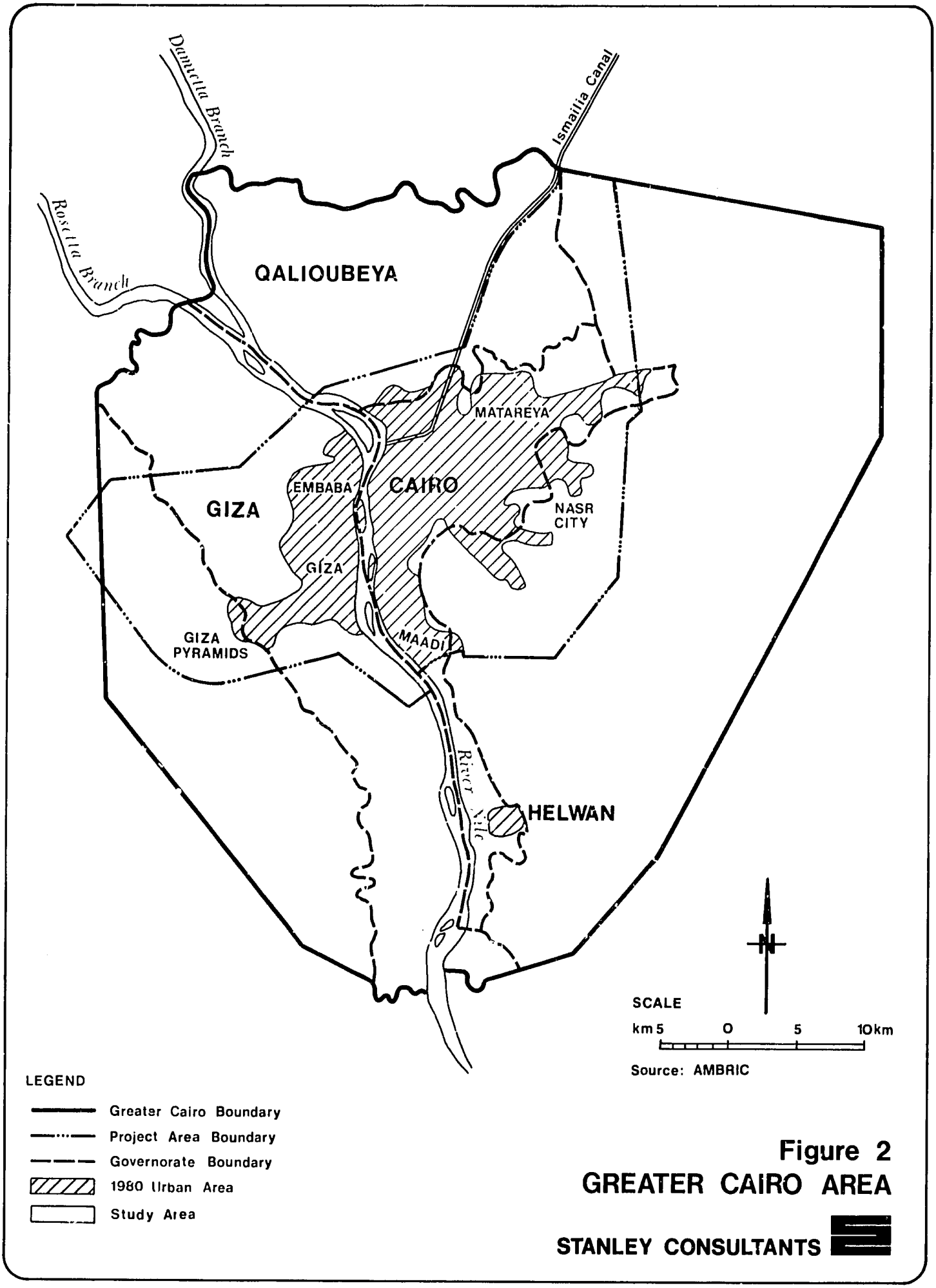

Figure 2
GREATER CAIRO AREA

STANLEY CONSULTANTS

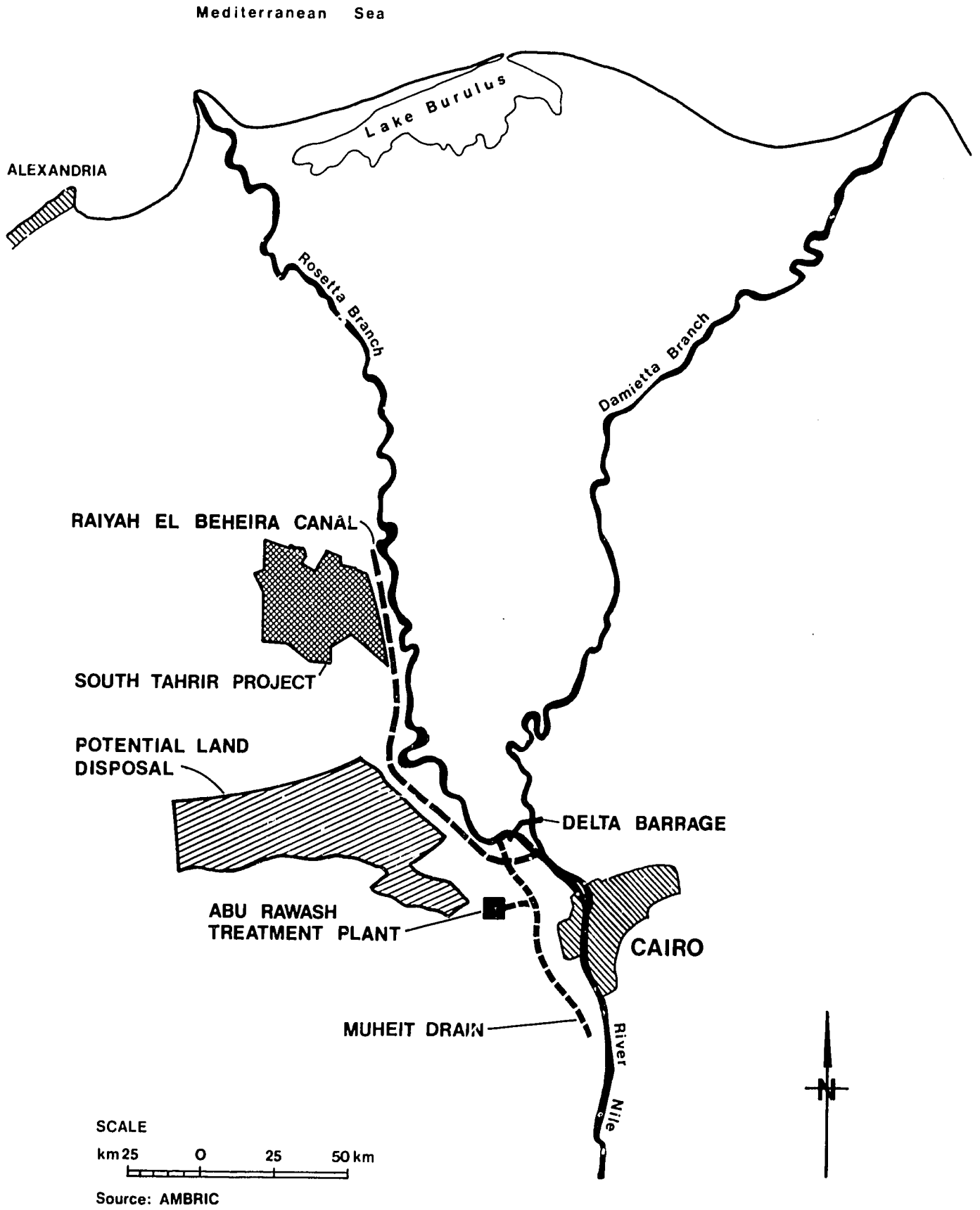

Source: AMBRIC

Figure 3
CAIRO REGIONAL AREA

STANLEY CONSULTANTS

Land Use

Residential areas dominate current and projected land use in the West Bank study area as shown in Table 3.

TABLE 3

PROJECTED YEAR 2000 LAND USE

	Area	
	(ha)	(%)
Residential	7,046	76.6
Commercial	85	0.9
Government	318	3.5
Industrial	1,744	19.0
TOTAL	9,193	100.0

Source: AMBRIC "Design Inception Report", June 1981.

Population density in residential areas ranges from fairly low values in the western rural areas to isolated pockets of high densities approaching 1,500 persons per hectare (ha). The average projected density for the study area is in the moderate range of 450 persons per hectare, however, lower income residential areas will continue to experience severely overcrowded conditions.

Potable Water Supply

Water serving the greater Cairo area is primarily from the Nile, with supplementary supply derived from shallow wells. Several water treatment facilities provide the necessary supply and a new one is under construction on the West Bank in the Embaba area.

Water is extensively distributed on the West Bank either through direct house connections or at public standpipes. The water network seems to be expanding slightly in advance of sewers and continued monitoring

of this needs to take place to ensure that no new sewers are installed prior to water service house connections. Similarly, water connections should not be initiated without satisfactory sewer service.

Wastewater Flows and Characteristics

Numerous factors affect the quantity and characteristics of urban wastewater. The mix of residential, commercial, and industrial development, and the per capita water use are the primary factors.

The projected sewered population and wastewater flows for the West Bank are summarized in Table 4. The quantity of wastewater is expected to increase from approximately 326,000 cubic meters per day (cmd) in 1985 to approximately 1,188,000 cmd at the planning horizon (year 2010).

TABLE 4

PROJECTED WEST BANK WASTEWATER FLOWS

	Sewered Population (1000)	Percent Population Served (%)	Wastewater Flow (1000 cmd)
1980	861	47.7	187
1985	1,427	68.3	326
1990	1,872	79.7	479
2000	3,117	97.3	1,052
Planning Horizon	3,497	97.6	1,188

Source: AMBRIC "Design Inception Report", June 1981.

The strength of the Cairo wastewater is moderately high. Wastewaters are primarily of domestic origin. Industrial wastes are not expected to pose significant treatment difficulties. Characteristics of the wastewater and the sludge removed during treatment are not expected to limit their agricultural use.

Industrial Wastewater

The presence of industrial wastes in municipal sewage can have a significant adverse impact on the collection, transmission, treatment

and disposal systems. These materials may reduce the performance of biological waste treatment systems or prevent utilization of the effluent and sludge for agriculture purposes.

A limited industrial waste survey was conducted to provide a preliminary assessment of industrial wastes. Fifty-nine public sector industries which contribute the majority of the industrial waste flow and load were identified. Industries were grouped by manufactured product and general wastewater characteristics. Analyses indicate the following:

1. The total industrial flow is less than 10 percent of the 1985 projected West Bank municipal flow.
2. Less than 2 percent of the projected municipal flow contains industrial wastes that are harmful to the system and require more than on-site pretreatment prior to discharge. The vast majority of industrial sites are small fabricators or specialty shops that discharge small volumes of generally innocous or readily manageable wastewater.
3. The existing and projected West Bank industries have no significant effect on the proposed primary or secondary biological waste treatment systems. The use of sludge and treated effluent for land reclamation does not present an immediate health or crop toxicity problem.
4. Available data for adequate characterization of industrial wastes are not reliable, not available, or nonexistent. A comprehensive wastewater survey of West Bank industry is recommended.

Wastewater Treatment and Disposal

There are three treatment works which serve the West Bank area. The plants at Nahya and Zenein were designed to provide primary and secondary levels of sewage treatment, respectively. The plant at Abu Rawash treats only sludge from the other West Bank facilities. Sludge is dried on sand beds and sold to local farmers for agriculture use.

The Nahya and Zenein plants have exceeded their design treatment capability and are performing significantly below design expectations because of uncontrolled growth of population and an increase in sewered area. Poor design and construction and operation and maintenance deficiencies in collection and treatment systems have aggravated the poor treatment performance caused by overloaded conditions. Approximately 120,000 cmd of untreated sewage are bypassed directly to the Muheit Drain at the Zenein facility and both plants are in gross violation of Government of Egypt (GOE) effluent discharge criteria.

The Zenein plant is currently undergoing expansion to increase secondary treatment capacity by 50 percent. Rehabilitation is also needed to ensure secondary treatment performance by the existing facilities. This work task is included in the AMBRIC plan and is badly needed.

The AMBRIC treatment-disposal plan for the West Bank assumes that the Zenein works will be expanded and upgraded and that the Nahya plant will be abandoned. A new mechanical biological treatment plant will be built at Abu Rawash to treat an initial flow of 400,000 cmd and all additional flow to the design horizon. The Zenein and Abu Rawash plants will discharge secondary treated sewage to the Rosetta Branch of the Nile River via the Muheit Drain. A portion of the Muheit Drain flow will be withdrawn downstream from the treatment plant discharge and utilized for desert land reclamation and crop irrigation.

The AMBRIC plan satisfies the existing effluent quality discharge criteria of the Government of Egypt and potentially allows reuse of effluent for agricultural purposes in accordance with national policy. There is concern, however, about the high level of operational expertise needed to maintain and ensure reliable treatment performance of the biological secondary treatment works proposed for Abu Rawash. It is primarily this concern and the expressed concern of the Government of Egypt about discharge to the Nile which have led the Stanley Consultants study team to re-evaluate treatment-disposal alternatives that minimize operational skills and avoid discharge to the Nile.

Wastewater Collection

Initial sewer construction on the West Bank did not occur until around 1939. Deteriorated conditions brought a surge of system development in the mid-1960's, including construction of the Zenein treatment facility which began operation in 1970. Since that time, population growth and urban development have taken place but wastewater facilities have not expanded correspondingly. Large populations live in unsewered high density areas which, when coupled with lack of other sanitation programs, has created a major public health hazard. It is estimated less than half the West Bank population has sewer service.

Many of the existing sewers are overloaded causing raw sewage to backup and flood streets in high density urban areas. Lack of sewer cleaning and resident misuse of the sewers through dumping of solid waste have created further clogging problems. Of over 190 sewage pumping facilities in the greater Cairo area, only 53 are operational. Electrical service to these facilities is undependable and power interruptions are routine, further compounding the overloaded situation.

Close coordination between water and wastewater authorities is necessary to avoid additional operational problems. In areas where sewers were installed before house water services, the system became plugged due to lack of sufficient water to convey wastes.

Water Quality

Wastewater from the existing Zenein and Nahya treatment facilities discharge to the Nahya Drain. This drain flows to the Mariouteyah Canal which parallels the Muheit and Lebbeni Drains with several interconnections among them (Figure 1). Wastewater in this drainage system flows until it meets the Rosetta Branch of the Nile (Figure 3).

Due to poor treatment facility performance, the Nahya and Muheit Drains are essentially open sewers to the Nile. Residents living along the drains are generally aware of the polluted conditions and do not use the water for purposes other than supplemental irrigation. The Rosetta Branch is used for domestic and industrial water supply, irrigation, and as a fishery resource. The nearest major water withdrawal for

domestic/industrial purposes is at Kafr el Zayat, some 100 km downstream of the confluence with the Muheit Drain.

Available water quality data suggest a moderate impact of West Bank effluents upon the Rosetta Branch of the Nile; however, sufficient information is not available to determine the extent of present river water quality deterioration. Flows and dilution water available in the Rosetta Branch are periodically low because of the large diversion of water to the Raiyah el Beheira Canal at the barrage.

Soil Characteristics

Figure 3 shows desert areas identified by the Government of Egypt as potential land reclamation sites. The areas lie on either side of the Alexandria-Cairo road and soils are coarse textured consisting primarily of sands and gravels.

These desert lands (identified as W1 through W4 by AMBRIC) are considered marginal for agricultural development. However, available data indicates the soils could be successfully irrigated with wastewater effluent using the sprinkler or drip methods. The impact of intensive wastewater irrigation on the local groundwater is expected to be negligible. Groundwater in the Nile River Valley is primarily fed from the Nile River. The identified desert lands adjacent to the Nile Valley are at a higher elevation and the local water table is relatively deep. Additional information is needed to verify these preliminary conclusions.

Public Health

Rapid population growth and urban development over the past quarter century have created severely overcrowded and unhealthy conditions in Cairo. The infant mortality rate is one of the highest in the world. Although Egypt has numerous health problems resulting from poverty, malnutrition and uncontrollable environmental factors, a common thread throughout the fabric of poor health is the existence of human waste. Because of the pervasiveness of excreta-related infections, which can readily transform malnutrition and other diseases into life-threatening situations, human waste is the largest source of death and disease in the country. Water-related diseases constitute a large portion of this.

The majority of water-related diseases originate from contamination of water and food through the following mechanisms:

1. Transport and storage of otherwise safe water.
2. Interrupted services and social customs which foster use of canal water for bathing, washing clothes and cooking utensils and in rare cases, drinking.
3. Poor personal hygiene.

The single most important step in reducing exposure to water-borne disease is to contain and remove sources of human fecal matter. Thus, an improved wastewater system is a necessary element to achieve improvements in public health. Numerous other health-related efforts are required in order to fully realize the potential health benefits which may accrue from improved sanitation. Additional programs include provision and protection of potable water, removal of solid waste and effective health education.

Institutional

Numerous Egyptian laws and executive regulations have established policies and procedures which effect the greater Cairo wastewater management program. Several governmental agencies are involved in various elements of the potential wastewater system. Many lateral rather than superior organizational relationships exist among agencies. These agencies have overlapping responsibilities and/or activities, creating potential inefficiency. Pollution control enforcement is hampered due to scarcity of funds, inadequately trained personnel and improper or insufficient equipment and supplies.

National policies such as population redistribution and food self-sufficiency are pertinent to selection of a specific wastewater management program. Utilization of wastewater for agricultural purposes in d sert lands can assist in meeting national goals by reducing dependence on foreign sources of food.

The cultural value of the Nile to Egypt and Egyptians is important. From time immemorial the Nile has been revered and considered to have baraka or blessing. The Nile is prominent in ceremonial life to many

rural Egyptians and is considered good, for both mystical and medicinal reasons. Thus, even with proper wastewater treatment, discharge of wastes into the Nile has a ritually polluting effect.

Much of the inadequacy and poor performance of existing sewerage facilities can be related to personnel management, operation and maintenance. Government programs ensuring guaranteed jobs has reduced productivity and efficiency. Wages are low and not competitive with private enterprise or foreign governments. Migration of technically trained Egyptian engineers and technicians to neighboring countries offering higher wages is uncontrolled. In addition, social values tend to place a stigma on workers engaged in sewerage agencies due to the cultural aversion to human waste.

Food Resources

Agriculture represents the largest sector in the Egyptian economy employing over 40 percent of the work force. The Government of Egypt has invested heavily in reclamation of marginal soils on desert fringes as an attempt to offset agricultural losses suffered to urban expansion. High costs, poor physical performance and management problems have characterized these government investments in desert or "new lands".

The government has extensively intervened in management of the agricultural sector through pricing and marketing policies, income and employment programs and direct investment. Complex controls and programs appear to have hindered rather than stimulate development and increased agricultural production is required to meet the needs of rising population. The use of treated wastewater can potentially be integrated to partially assist in agricultural production.

Energy Resources

Approximately 50 to 60 percent of the total electric demand in Egypt is met by hydroelectric power, with the remaining generated by petroleum and natural gas. Energy growth in the recent past has averaged over 14 percent per year. This extensive growth has strained existing generation capacity and distribution networks. This is particularly

evidenced by numerous power interruptions in Cairo.

Prices for energy products are highly subsidized; thus existing rates in Egypt do not truly reflect world market prices. This pricing policy results in wasteful consumptive practices and contributes to the high demand growth.

CHAPTER 3 - ALTERNATIVE WASTEWATER MANAGEMENT PLANS

No Action

One option concerning the Cairo West Bank wastewater system includes taking no action to provide improved service. This would result in continued public health and operational problems. Further West Bank development would either be curtailed or cause continued overloading of the existing system and result in severe deterioration of environmental conditions.

Collection Options

Transport of sewage away from the living environment is the primary objective of any wastewater collection system. Removal of wastewater from the populated West Bank areas should have the highest priority over other system improvements, including upgraded and expanded treatment facilities and disposal methods. Sewage collection will provide the greatest benefit to the largest number of people.

A conventional gravity and pump wastewater collection system has been proposed by AMBRIC. It is the only feasible long-term solution in the densely populated urban areas. Collection and conveyance of wastes to the Zenein plant and the proposed Abu Rawash treatment facilities appear desirable in comparison with treatment at numerous smaller facilities located around the urban area. Figure 1 shows the proposed AMBRIC collection system for the West Bank. The combined collection and treatment system enables minimum conveyance of effluent to either drains or desert land for ultimate disposal.

If capital funding is not adequate to complete the entire first-stage collection system, staging priorities must be established. Those projects which convey the most wastewater away from the most densely populated areas should have the highest priority. Using this priority system, collection system development should be undertaken first with the North West Project followed by the Zenein and Pyramids Projects (project areas as designated by AMBRIC). The North West Project includes the Embaba sewerage system and a major collector to the Abu Rawash

plant. The Zenein Project primarily includes relief collectors in the Giza area. The Pyramids Project involves a major collector to Abu Rawash.

There may be several components within each of the above major projects which should have differing priorities. A detailed study of the system would be required if further differentiation is needed. For selecting individual components within a project area, it is recommended that collection service be provided in the following order:

1. Unsewered areas with existing house service water supply.
2. Malfunctioning sewered areas with existing house service water supply.
3. Unsewered areas with planned/impending house service water supply.
4. Unsewered areas with standpipe water supplies.
5. Unsewered areas with no water supply and potential urban settlement areas.

Provision of communal waste facilities should be considered as a socially feasible option only where conditions are not practical for private household connections. In all areas where housing and infrastructure upgrading are possible, separate house connections should be first priority.

Treatment Options

A range of processes capable of providing the necessary levels of treatment performance were reviewed for the West Bank system. It was assumed that the Nahya plant would be abandoned, the Zenein works would be upgraded and expanded using activated sludge and that treatment would be provided at Abu Rawash or at remote desert sites. Treatment levels at Abu Rawash could be secondary using mechanical-biological processes (the AMBRIC plan) or primary only. Treatment at the desert sites would use land intensive systems that include anaerobic lagoons followed either by direct application on cropland or by a rapid infiltration system prior to application on land. The lagoon system can provide primary or better treatment while the infiltration system can provide an effluent quality better than secondary treatment.

Selection of wastewater and sludge treatment processes for the treatment-disposal alternatives emphasized equivalent treatment performance with minimum operation and maintenance and high performance reliability.

Disposal Options

Transport and discharge of treated wastewater to the Mediterranean Sea is a possible disposal option. It has several advantages and disadvantages. The high transport costs and loss of a water resource are serious disadvantages which make this option undesirable.

Pumping wastewater to remote desert lands for final disposition is another possibility. However, due to the pumping costs required for the higher desert elevations, mere disposal of the wastewater without reuse for agricultural purposes makes this option unattractive.

Treatment of wastewater with subsequent discharge to area drains or pumping to desert lands for crop irrigation are the two wastewater treatment-disposal concepts evaluated in this study. Treatment and discharge to the drains and Nile River is comparable to wastewater practices in many parts of the world. Application of wastewater to the sandy desert soils is technically feasible using either sprinkler or drip irrigation methods.

Alternative Plans for Environmental Assessment

For purposes of assessing potential environmental impacts, it has been assumed the Zenein treatment facility will be upgraded and operated at a secondary treatment level. Wastewater flows exceeding the Zenein treatment facility capacity will be conveyed for treatment either at Abu Rawash or at desert reclamation sites proposed by the Government of Egypt. Technical screening of a large combination of treatment-disposal measures has identified several alternatives for evaluation of their potential impacts. These alternatives are graphically presented in Figures 4 through 12 and are summarized in Table 5.

Collection -

Alternative A - No Action (Existing System) - The existing system shown schematically in Figure 4, represents the "no action" alternative. Collection and conveyance facilities serve only a portion of the West Bank population. At best, the Nahya and Zenein treatment plants will provide

TABLE 5

SUMMARY OF COLLECTION, TREATMENT AND DISPOSAL ALTERNATIVES

Alternative - (Description)	System Component			
	Collection	Conveyance	Treatment	Disposal
A - (No Action)	Existing system.	Existing system.	Nahya primary; Zenein primary; Abu Rawash sludge drying.	Nahya to drain; Zenein to drain; sludge to Abu Rawash and agricultural use.
B - (Complete Collection and Partial Treatment)	Add AMBRIC primary collectors.	Add conveyance of AMBRIC collectors to Muheit Drain.	Abandon Nahya; upgrade/expand Zenein to secondary.	Zenein to drain; AMBRIC collectors to drain.
C - (Complete Collection and Treatment)	Add AMBRIC primary collectors.	Add conveyance of AMBRIC collectors to treatment sites.	Abandon Nahya; upgrade/expand Zenein to secondary. Other plants as described below.	Zenein to drain. Other plants as described below.
C-1 - (Secondary Treatment and Drain Disposal)	Add AMBRIC primary collectors.	Add conveyance of AMBRIC collectors to Abu Rawash.	Add secondary treatment at Abu Rawash.	Abu Rawash to drain.
C-2 - (Secondary Treatment and Partial Land Disposal)	Add AMBRIC primary collectors.	Add conveyance of AMBRIC collectors to Abu Rawash and Muheit Drain to desert.	Add secondary treatment at Abu Rawash.	Abu Rawash to drain and desert sites for reclamation.

TABLE 5

SUMMARY OF COLLECTION, TREATMENT AND DISPOSAL ALTERNATIVES (cont'd)

Alternative - (Description)	System Component			
	Collection	Conveyance	Treatment	Disposal
C-3 - (Primary Treatment and Drain Disposal)	Add AMBRIC primary collectors.	Add conveyance of AMBRIC collectors to Abu Rawash.	Add primary treatment at Abu Rawash.	Abu Rawash to drain.
C-4 - (Primary and Land Treatment/Disposal)	Add AMBRIC primary collectors.	Add conveyance of AMBRIC collectors to Abu Rawash and to desert sites.	Add primary treatment at Abu Rawash; use desert land for further treatment.	Abu Rawash to desert sites for reclamation.
C-5 - (Desert Lagoon and Land Disposal)	Add AMBRIC primary collectors.	Add conveyance of AMBRIC collectors to desert sites.	Add lagoon at desert sites.	Desert sites for reclamation.
C-6 - (Desert Infiltration and Land Disposal)	Add AMBRIC primary collectors.	Add conveyance of AMBRIC collectors to desert sites.	Add infiltration at desert sites.	Desert sites for reclamation.

Source: Stanley Consultants.

primary treatment with discharge to the Nahya Drain. Sludge is processed at Abu Rawash.

FIGURE 4

ALTERNATIVE A - NO ACTION (EXISTING SYSTEM)

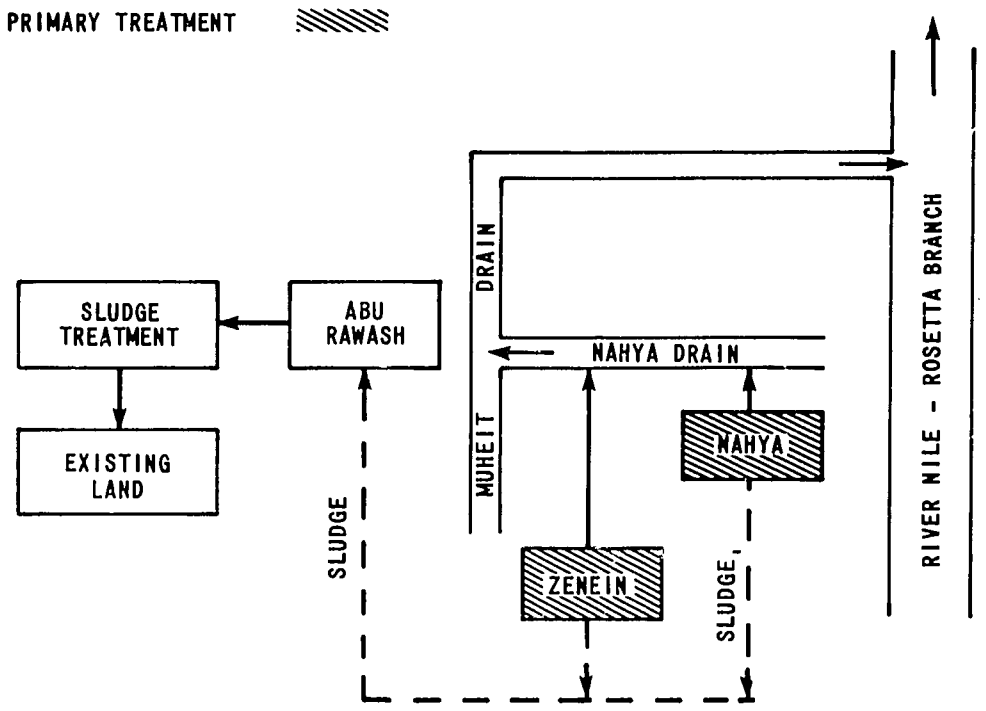

Alternative B - Complete Collection and Limited Conveyance (Minimum Treatment and Drain Disposal) - This alternative (Figure 5) provides for construction of the primary collector system proposed by AMBRIC but no conveyance of collected wastewater to Abu Rawash. Zenein would provide secondary treatment and discharge to the Nahya Drain. Collected wastewater not going to Zenein would be discharged untreated to drains. This collection alternative assumes that financial resources are limited and that new treatment facilities cannot be immediately provided. Temporary exemption of Egyptian wastewater discharge standards would be necessary.

FIGURE 5

ALTERNATIVE B - COMPLETE COLLECTION AND LIMITED CONVEYANCE (MINIMUM TREATMENT AND DRAIN DISPOSAL)

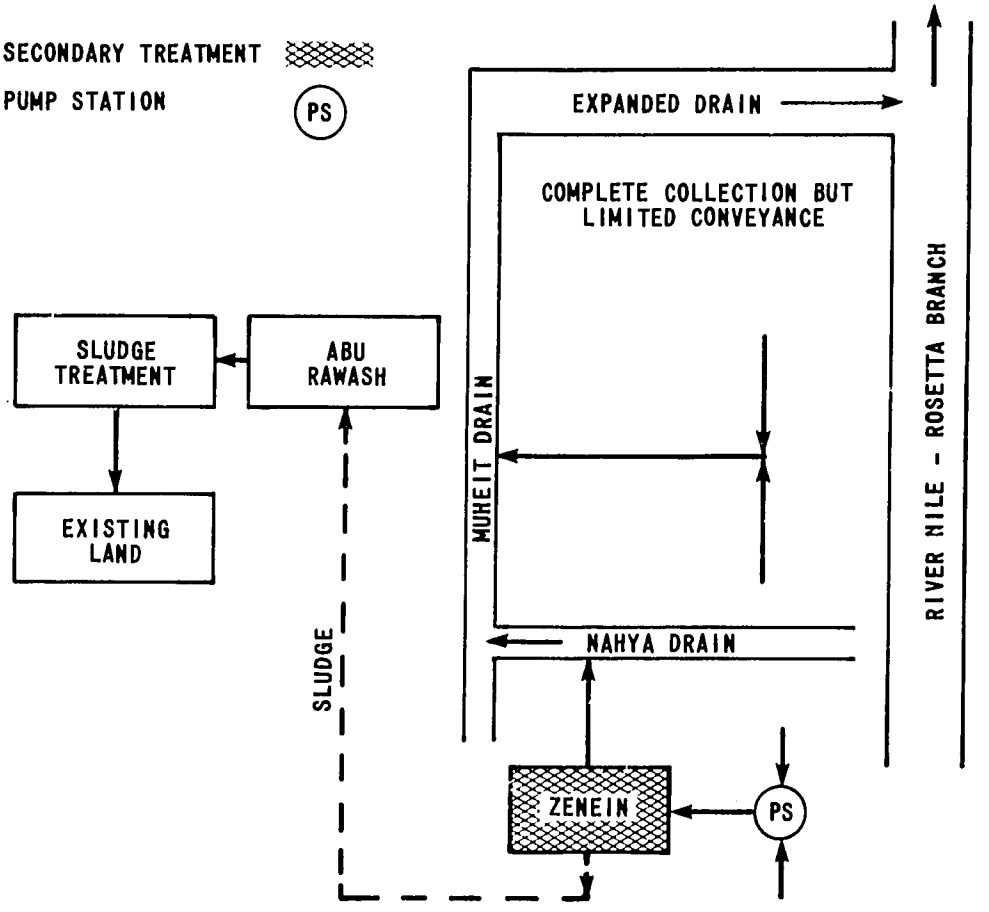

Alternative C - Complete Collection and Conveyance (for Alternatives 1-6) - Collection Alternative C (Figure 6) represents the complete primary sewer system proposed by AMBRIC, including pumping collected wastewater to a new treatment facility rather than discharging to local drains as in Alternative B. Zenein would be upgraded and expanded to secondary treatment and additional treatment would be provided at Abu Rawash and/or in the desert. All treatment and disposal options require the Alternative C collection and conveyance system be in place.

FIGURE 6

ALTERNATIVE C - COMPLETE COLLECTION AND CONVEYANCE (FOR ALTERNATIVES 1-6)

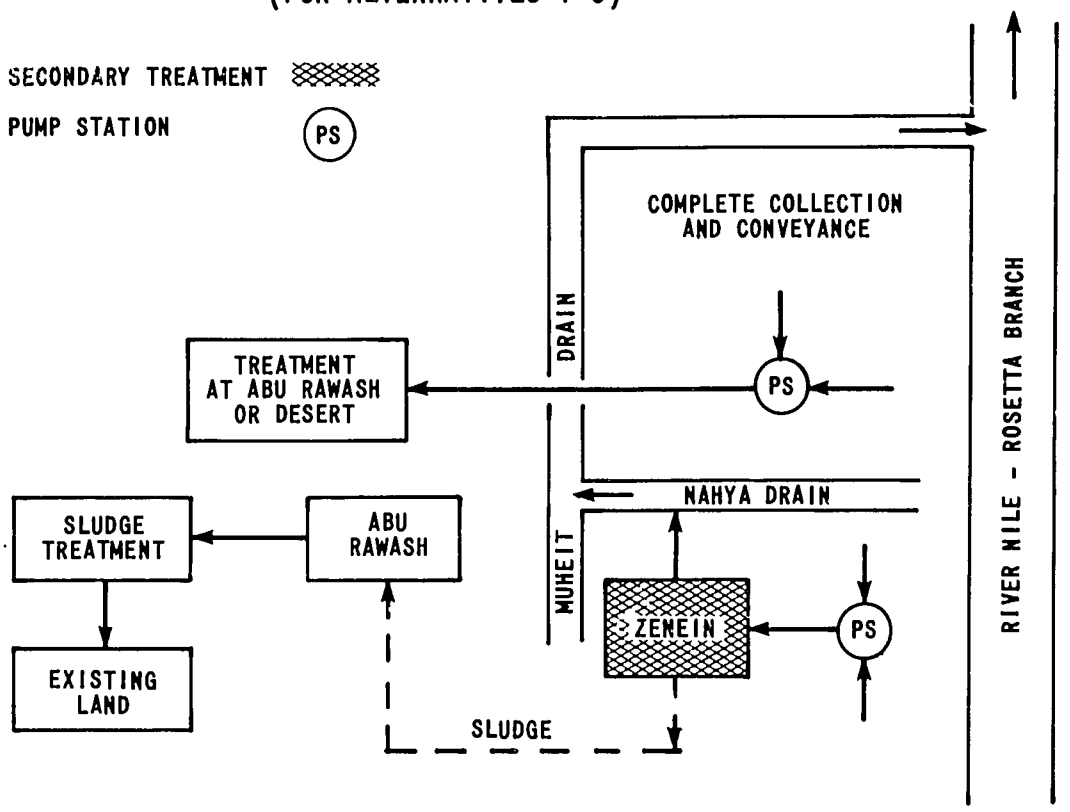

Treatment and Disposal -

Alternative C-1 - Secondary Treatment and Drain Disposal - This alternative provides secondary treatment at both Zenein and Abu Rawash with discharge of effluent to nearby drains (Figure 7). This alternative is the proposed plan for the West Bank area as contained in AMBRIC documents.

Alternative C-2 - Secondary Treatment with Partial Land Disposal - This slight variation of Alternative C-1 has a portion of the flow from the Muheit Drain pumped to land disposal areas (Figure 8). Alternative C-2 is the improvement plan proposed by AMBRIC assuming the Government of Egypt obtains appropriate land areas to utilize the effluent for agricultural purposes.

FIGURE 7

ALTERNATIVE C-1 - SECONDARY TREATMENT WITH DRAIN DISPOSAL

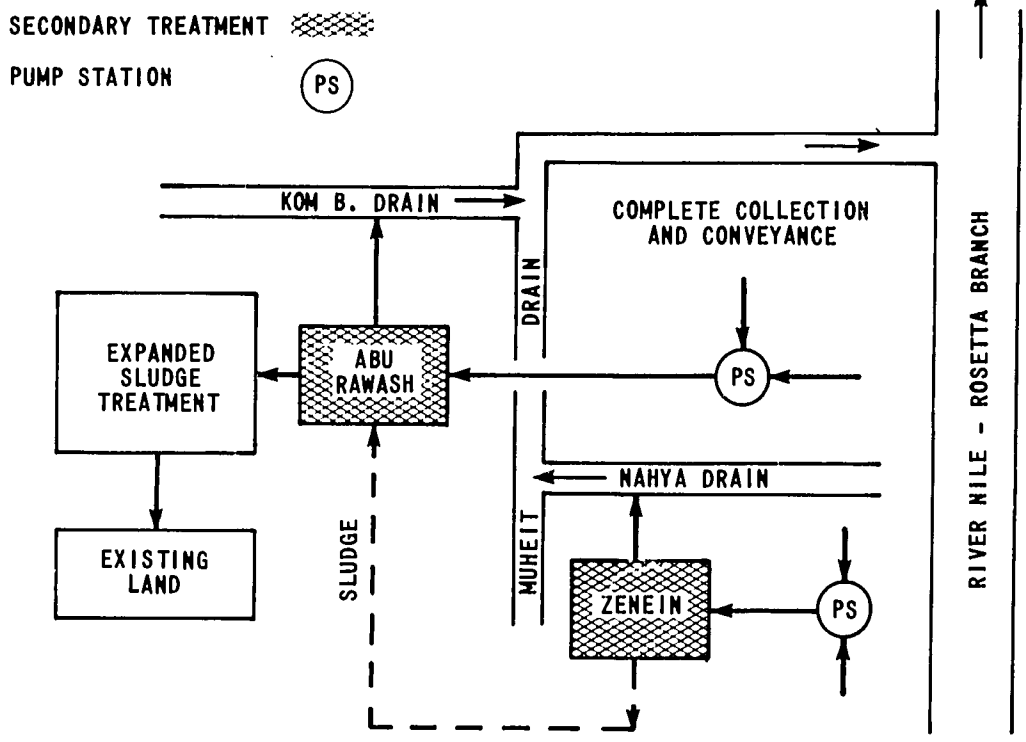

FIGURE 8

ALTERNATIVE C-2 - SECONDARY TREATMENT WITH PARTIAL LAND DISPOSAL

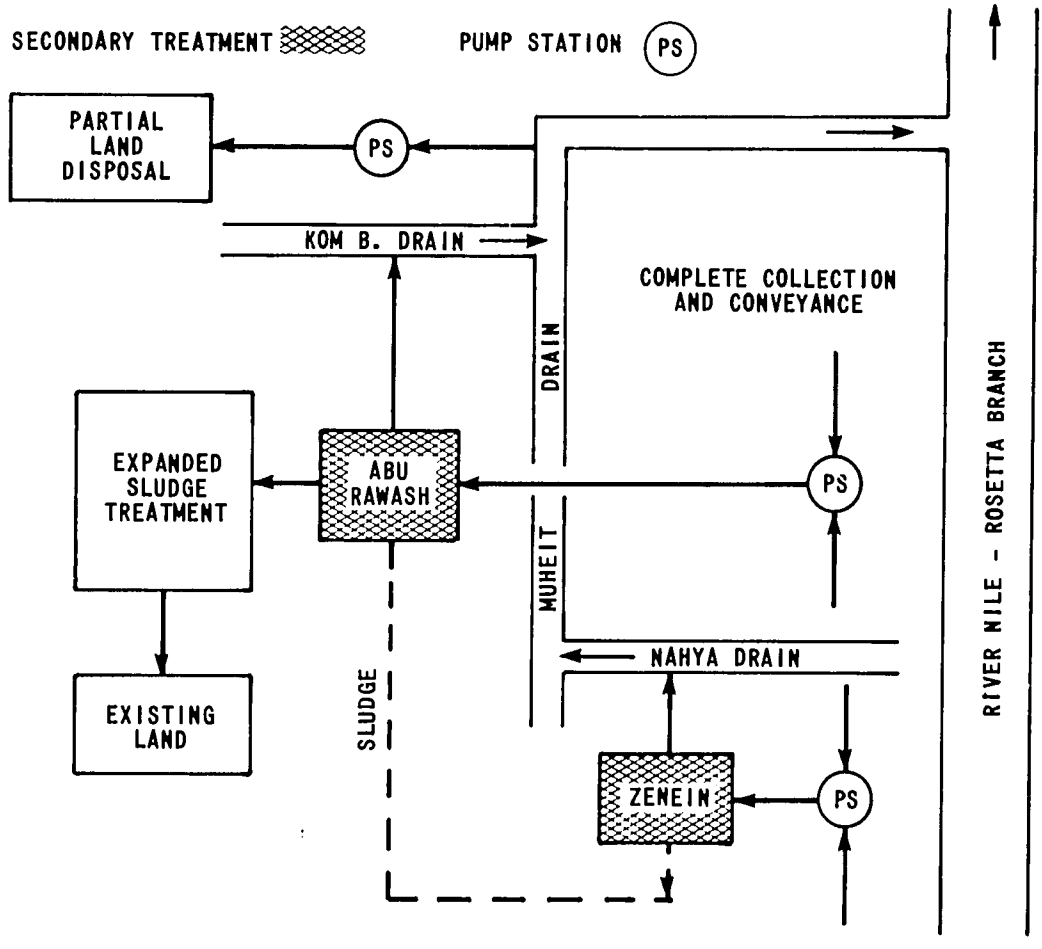

Alternative C-3 - Primary Treatment with Drain Disposal - This alternative modifies the proposed AMBRIC scheme by providing only primary treatment facilities at Abu Rawash with effluent discharged to existing drains (Figure 9). Assessment of this alternative indicates the impact of a short-term interim plan that could result from curtailed financial resources. This plan evaluates the consequences of a staged treatment program just as Alternative B assesses a staged collection program. Alternative C-3 would require temporary exemption of Egyptian wastewater discharge standards.

FIGURE 9

ALTERNATIVE C-3 - PRIMARY TREATMENT WITH DRAIN DISPOSAL

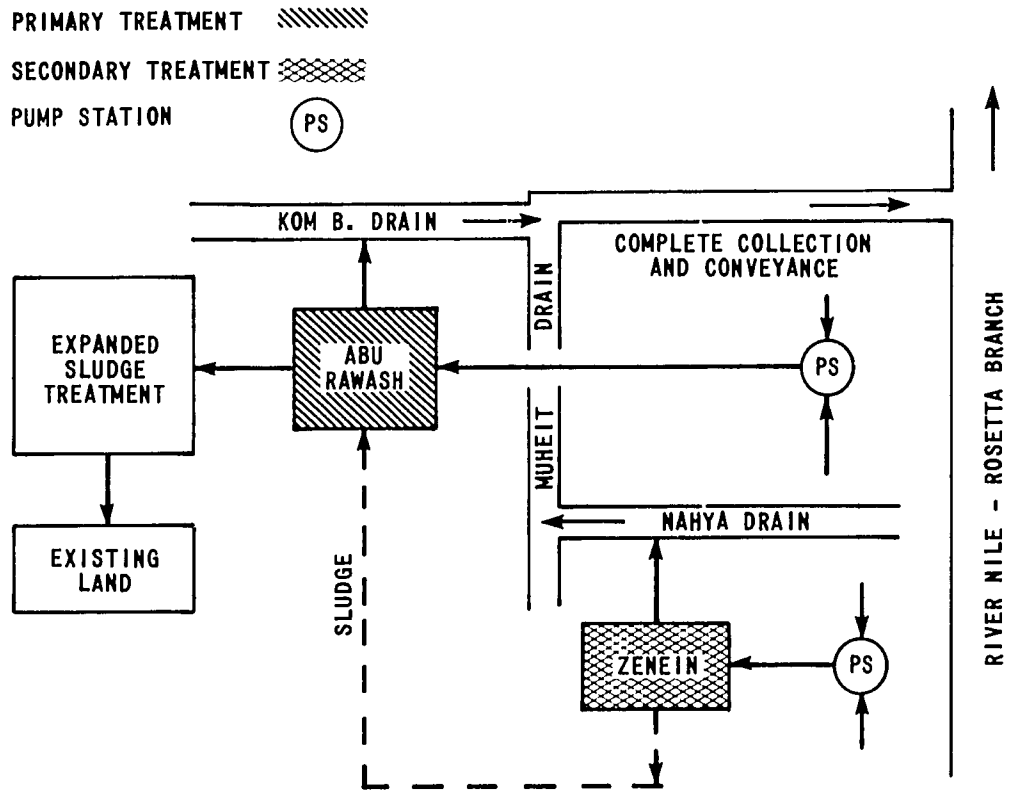

Alternative C-4 - Primary and Land Treatment/Disposal - This alternative (Figure 10) is a modification of Alternative C-3 with primary effluent being pumped to desert sites for further treatment and disposal on agricultural land rather than discharging to drains. Reduced investment in secondary treatment facilities at Abu Rawash is transferred to investment in pumping and transmission facilities needed to reach remote land treatment areas.

FIGURE 10

ALTERNATIVE C-4 - PRIMARY AND LAND TREATMENT/DISPOSAL

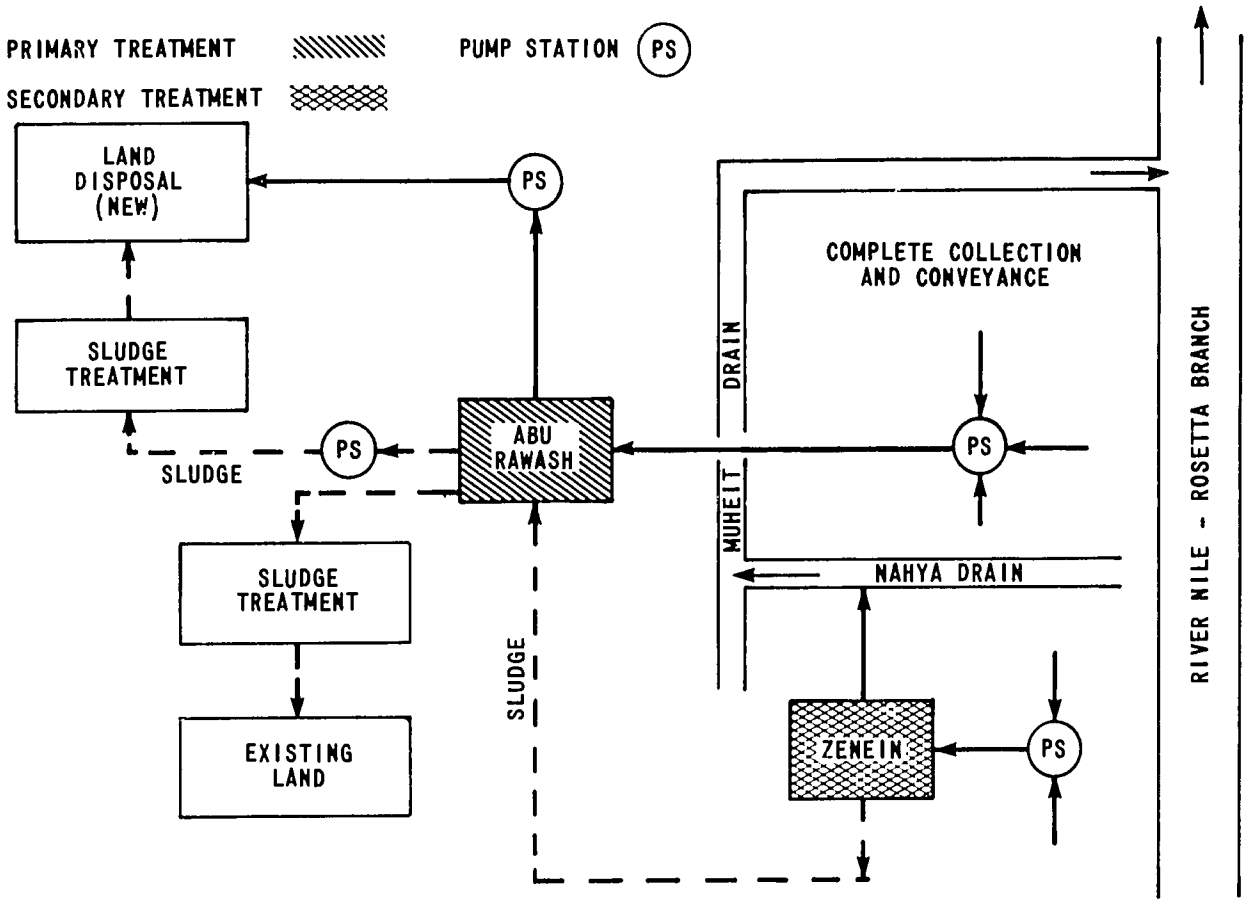

Alternative C-5 - Desert Lagoon Treatment with Land Disposal - Figure 11 shows this alternative which provides collection and conveyance of wastewater to remotely located desert lagoons in the Alexandria-Cairo road vicinity. Effluent from the lagoons would be pumped to land disposal areas for irrigation purposes. This plan offsets some of the inherent disadvantages associated with the mechanical treatment system at Abu Rawash, as proposed in Alternatives C-1 through C-4.

FIGURE 11

ALTERNATIVE C-5 - DESERT LAGOON TREATMENT WITH LAND DISPOSAL

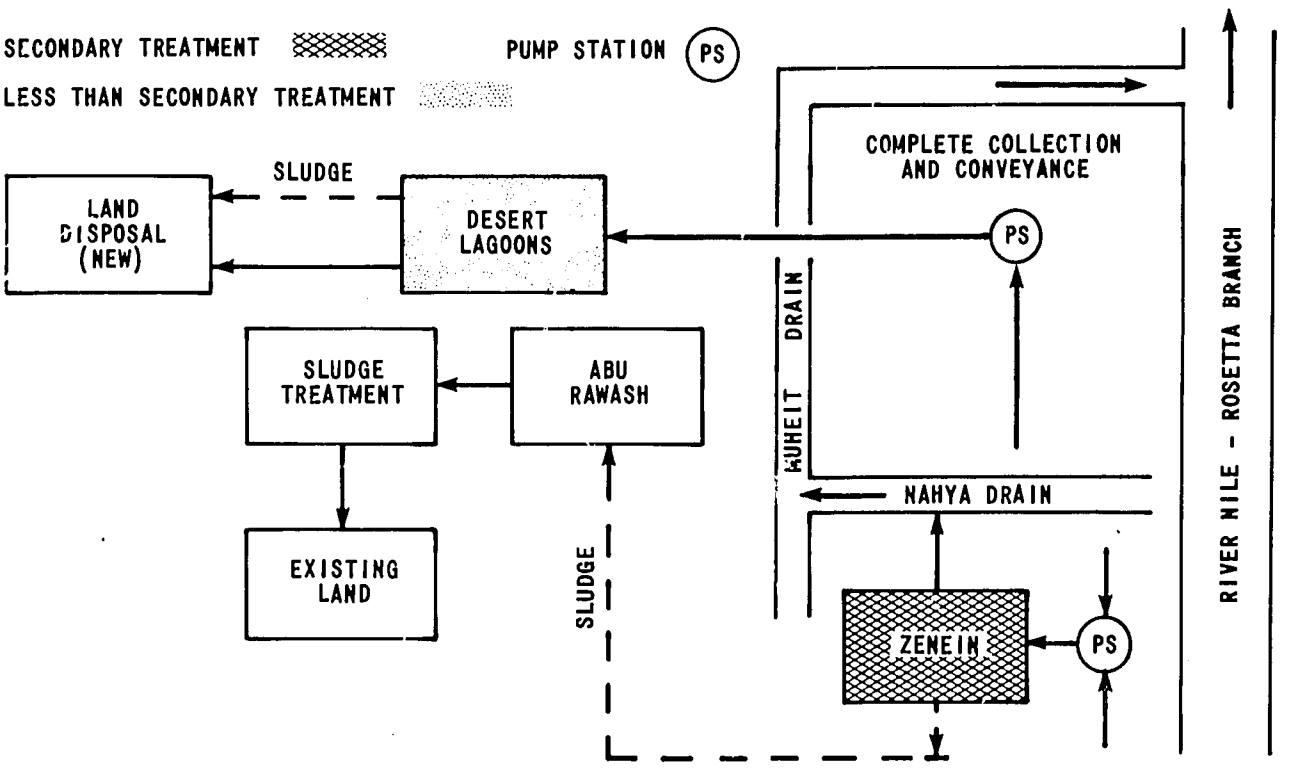

Alternative C-6 - Desert High Rate Infiltration Treatment with Land Disposal - This alternative is comparable to Alternative C-5, except that treatment at desert sites is by infiltration into the soil instead of flow-through lagoons. Treated effluent would be collected in underdrains or the groundwater aquifer and used for agricultural production. This plan provides better treatment than others and is less dependent on mechanical systems.

FIGURE 12

ALTERNATIVE C-6 - DESERT HIGH RATE INFILTRATION TREATMENT WITH LAND DISPOSAL

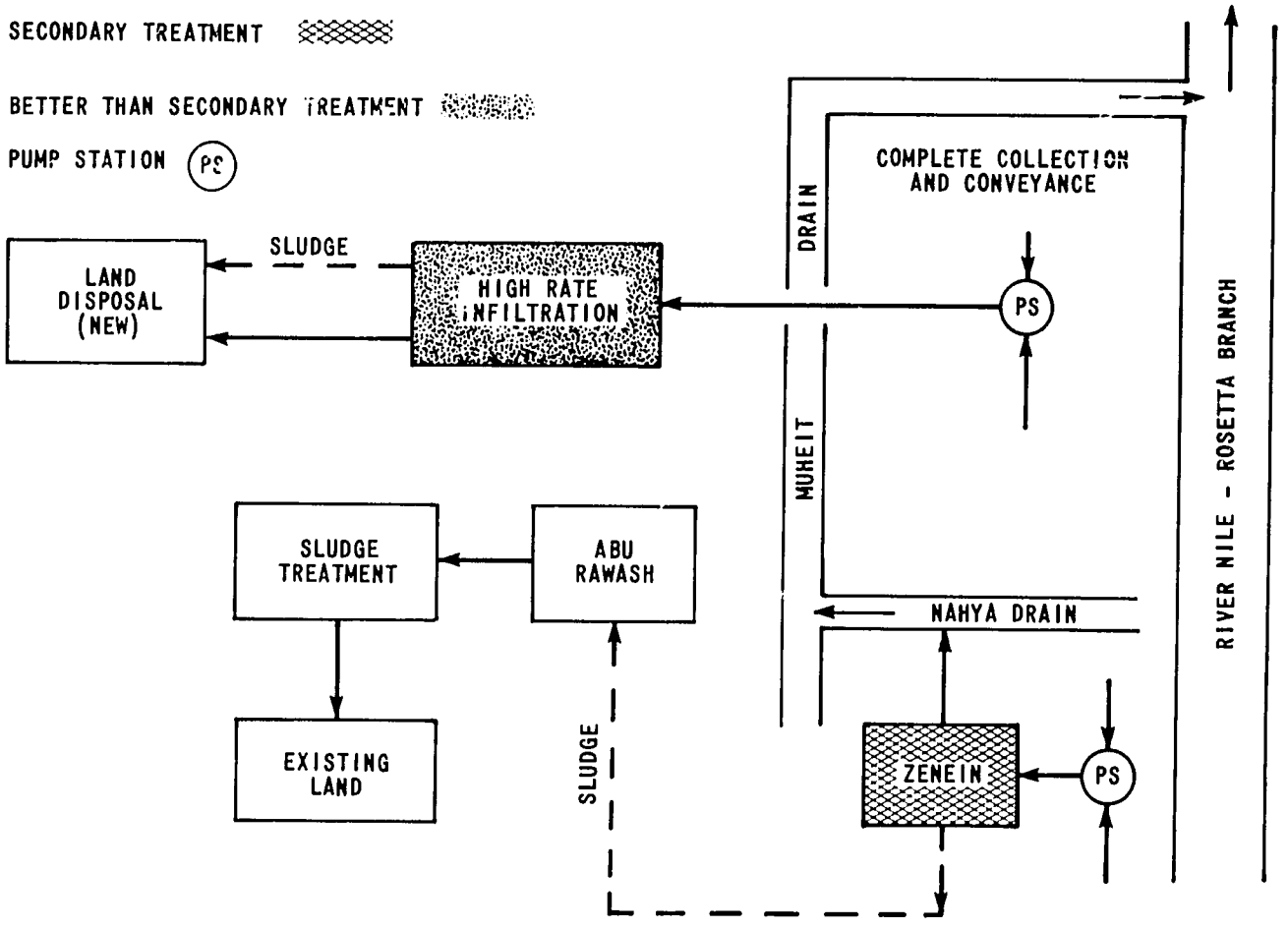

CHAPTER 4 - ENVIRONMENTAL CONSEQUENCES OF COLLECTION ALTERNATIVES

Criteria for Alternative Comparison

Impact evaluations of the collection alternatives have concentrated on four criteria:

1. Economics.
2. Reliability.
3. Public Health.
4. Institutional/Social.

Evaluations of these factors utilize quantitative methods whenever justified by study conditions and available data. In many instances, however, the assessments were necessarily based on experienced professional judgment. Assessment of the alternatives considers not only impacts resulting from a well-conceived and well-run system, but also those that could result when portions of the system do not function as intended. Consequently, operation and maintenance of facilities was given particular attention in the evaluation as regards long-term environmental acceptability. This analytical approach assesses the risk inherent with any particular system and the potential means for mitigating such risks. Sensitivity of the systems to possible future conditions is assessed where appropriate.

The rank order (1, 2, or 3) of each alternative indicates the preferred alternative for each evaluation criterion. For example, a rank of one (1) for the Economic and Institutional/Social criteria indicates the alternative is preferred since it is the least cost option and is most compatible with existing institutional and social programs. A rank of one (1) for the Public Health and Reliability criteria indicates the alternative has the most public health benefits and is the most reliable alternative. It is strongly emphasized that an alternative's individual ranking for each of the evaluation factors are not additive; that is, the lowest sum of rankings does not necessarily identify the best alternative since the ranking system for each criterion does not quantify the degree of difference among alternatives. An overall rank for collection options is indicated based on analysis of the impact evaluation criteria rankings and professional judgment.

Economics

Table 6 summarizes the comparative capital and operation and maintenance costs for the three collection system alternatives in both present value and annual cost terms. Alternative A is the least costly because there is no capital outlay. Alternative C is approximately 50 percent more costly than Alternative B; however, Alternative B represents a staged option or interim solution and thus it is not directly comparable to Alternative C on a least cost basis.

TABLE 6

LIFE-CYCLE AND ANNUAL COSTS FOR COLLECTION ALTERNATIVES

	Alternative A No Action	Alternative B Complete Collection/Limited Conveyance	Alternative C Complete Collection/ Conveyance
Life-Cycle Costs (LE 10^6)[1]			
Present Value of Capital Investment	0	114.4	162.6
Salvage Value	0	8.7	13.0
Net Present Value:	0	105.7	149.6
Present Value of O&M	--[3]	1.6	2.4
Total Present Value	--	107.3	152.0
Annual Costs (LE 10^6)[1]			
Capital[2]	0	12.4	17.6
O&M	--[3]	.2	.3
Total	--	12.6	17.9

1) Costs are mid-1980 financial values with 0.7 LE per U.S. $.

2) Annual debt service costs figured on 20-year project life with 10% discount rate.

3) Not estimated but expected to be higher than either Alternatives B or C, if Alternative A could be adequately operated and maintained. This occurs because Alternatives B and C have fewer pumping stations than the existing collection system (Alternative A) and because relieving overloaded sewers should reduce sewer cleaning requirements.

Source: Stanley Consultants.

A comparison of the economic ranking of the collection alternatives is shown in Table 7.

Alternative A receives the highest rank, followed by Alternative B and then Alternative C. Alternative C, which provides complete collection and conveyance to treatment, has the highest cost. However, the nonquantifiable monetary benefits of public health and aesthetic improvements have not been considered in the economic assessment of Alternatives B and C.

Though wastewater collection should necessarily be provided by the responsible governmental body, competing demands for limited financial resources dictate that interim measures must be available and the effects of these options known. Consideration of reliability, public health and institutional/social impacts of the alternative collection systems are addressed in the following sections.

TABLE 7

ECONOMIC COMPARISON OF COLLECTION ALTERNATIVES

	Ranking Comparisons*		
Criteria	Alternative A No Action	Alternative B Complete Collection/Limited Conveyance	Alternative C Complete Collection/ Conveyance
Present Value of Capital Costs	Low	Medium	High
Annual O&M Expenses	High	Medium	Medium
Total Life-Cycle Costs	Low	Medium	High
Ranking of Alternatives	1	2	3

*Alternative rankings are relative to each other with "1" being the most desirable option and "3" the least desirable option.

Source: Stanley Consultants.

Reliability

Table 8 summarizes the relative ranking of collection alternatives for various reliability factors.

Alternative A is considered the most complex and difficult to operate because of the large number of isolated pumping stations and the condition of the existing system. The system has a history of poor performance and its operation results in overflows of wastewater in high density population areas. This alternative is the least desirable choice.

Alternative B will be the simplest and easiest to operate; however, its main disadvantage is that wastewater is only displaced to open drains. From the standpoint of collection only, this alternative ranks high because of ease of operation and dependability.

Alternative C provides the best performance when compared with the other two alternatives, but it is more difficult to operate because of the long conveyance system and associated large pumping stations. From the standpoint of collection system reliability, this alternative ranks just slightly below Alternative B.

Public Health

Table 9 summarizes the comparison of public health aspects of the collection alternatives. Alternative C provides complete collection and conveyance of wastewater to treatment and is much preferred over the other two options. Alternative B, which provides complete collection, but conveyance to nearby drains without treatment, is more desirable than Alternative A which provides no action.

Without collection system improvements in the West Bank area, excreta-related diseases are not likely to decline. Provision of adequate wastewater collection will provide a much better opportunity to decrease these infections by reducing the current high levels of contact with human waste. Numerous other public health and environmental programs are required to fully realize the potential health benefits from a sewage collection system. Nevertheless, provision of adequate sewage collection will be a very important first step to achieve improved public health and aesthetic conditions in the West Bank urban area.

TABLE 8

RELIABILITY COMPARISON OF COLLECTION ALTERNATIVES

Criteria	Ranking Comparisons* Alternative A No Action	Alternative B Complete Collection/Limited Conveyance	Alternative C Complete Collection/ Conveyance
Minimize level of training for operation, maintenance and management	Medium	High	Medium
Minimize replacement parts and equipment	Low	High	Medium
Minimum equipment or system complexity	Low	High	Medium
Minimum dependence on electric utilities to function	Low	High	Medium
Minimum manpower to operate	Medium	High	Medium
Good system performance based on equivalent system experience	Low	Medium	Medium
Removal of sewage from human contact	Low	Medium	High
Ranking of Alternatives	3	1	2

*Alternative rankings are relative to each other with "1" being the most desirable option and "3" the least desirable option. Ranking considers collection system only.

Source: Stanley Consultants.

TABLE 9

PUBLIC HEALTH COMPARISON OF COLLECTION ALTERNATIVES

Criteria	Relative Comparisons*		
	Alternative A No Action	Alternative B Complete Collection/Limited Conveyance	Alternative C Complete Collection/ Conveyance
Public health benefits from reduction of water-related diseases	Low	Medium	High
Avoid deterioration of present conditions	Low	Medium	High
Minimize transfer of problems to another area	Medium	Low	Medium
Avoid creation of temporary health hazards	Medium	Low	Low
Ranking of Alternatives	3	2	1

*Alternative rankings are relative to each other with "1" being the most desirable option and "3" the least desirable option.

Source: Stanley Consultants.

Institutional/Social

Table 10 summarizes the comparison of collection alternatives concerning institutional and social factors.

Alternative C is the highest ranking system, primarily due to the potential for meeting national policy goals and cultural/aesthetic values when it is coupled with adequate treatment and disposal. Institutional differences between Alternatives B and C are relatively minor, however, Alternative B does require temporary waiver of existing Egyptian wastewater discharge standards. The no action option has little impact on institutional structures and thus Alternative A ranks lowest.

Summary Comparison

A summary comparison of collection Alternatives A, B, and C is shown in Table 11. Comparisons are based on economics, reliability, public health, and institutional/social criteria. The economic comparison

TABLE 10

INSTITUTIONAL/SOCIAL COMPARISON OF COLLECTION ALTERNATIVES

Criteria	Ranking Comparisons*		
	Alternative A No Action	Alternative B Complete Collection/Limited Conveyance	Alternative C Complete Collection/ Conveyance
Meeting national policy goals	Low	Medium	High
Cultural/aesthetic values maintained	Low	Low	High
Public acceptance of system	Low	Medium	Medium
Minimum skilled labor needs	Medium	Low	Low
Minimum organizational complexity	Medium	Medium	Medium
Ranking of Alternatives	3	2	1

*Alternative rankings are relative to each other with "1" being the most desirable option and "3" the least desirable option.

Source: Stanley Consultants.

reflects capital and partial O&M costs but ignores nonquantifiable monetary benefits, such as improved public health and aesthetics. For the overall ranking, Alternatives B and C appear to be nearly equal. However, professional judgment places the ranking of Alternative C above Alternative B.

In conclusion, Alternative C is the preferred collection system, if sufficient funding can be obtained for construction. High ranking in contributing to national goals and maintaining cultural values gives Alternative C an advantage over Alternatives A and B. If funding is constrained, Alternative B will be the next best approach, as it provides major health benefits through removal of sewage from the highly populated

areas. Alternative B can be a first step toward ultimate construction of Alternative C and treatment facilities. Conveyance facilities in Alternative C must be completed before treatment facilities at Abu Rawash can be used as intended by AMBRIC. Thus, the discussion of treatment and disposal options in Chapter 5 assume that the Alternative C collection system is in place.

TABLE 11

SUMMARY COMPARISON OF COLLECTION ALTERNATIVES

	Ranking Comparisons*		
	Alternative A No Action	Alternative B Complete Collection/Limited Conveyance	Alternative C Complete Collection/ Conveyance
Economics	1	2	3
Reliability	3	1	2
Public Health	3	2	1
Institutional/Social	3	2	1
Overall Ranking of Collection Alternatives	3	2	1

* Overall rankings from tables in preceding sections of this chapter, considering collection system only. Alternative rankings are relative to each other with "1" being the most desirable option and "3" the least desirable option.

Source: Stanley Consultants.

CHAPTER 5 - ENVIRONMENTAL CONSEQUENCES OF TREATMENT AND DISPOSAL

Criteria for Alternative Comparison

Impact evaluations of the treatment and disposal alternatives have concentrated on four criteria, just as the collection analyses:

1. Economics.
2. Reliability.
3. Public Health.
4. Institutional/Social.

Evaluations of these factors utilize quantitative methods whenever justified by study conditions and available data. In many instances, however, the assessments were necessarily based on experienced professional judgment. Assessment of the alternatives considers not only impacts resulting from a well-conceived and well-run system, but also those that could result when portions of the system do not function as intended. Consequently, operation and maintenance of facilities was given particular attention in the evaluation as regards long-term environmental acceptability. This analytical approach assesses the risk inherent with any particular system and the potential means for mitigating such risks. Sensitivity of the systems to possible future conditions is assessed where appropriate.

The rank order (1 through 6) of each treatment-disposal alternative indicates the preferred alternative for each evaluation criterion. For example, a rank of one (1) for the Economic and Institutional/Social criteria indicates the alternative is preferred since it is the least cost option and is most compatible with existing institutional and social programs. A rank of one (1) for the Public Health and Reliability criteria indicates the alternative has the most public health benefits and is the most reliable alternative. It is strongly emphasized that an alternative's individual rankings for each of the evaluation factors are not additive; that is, the lowest sum of rankings does not necessarily identify the best alternative since the ranking system does not quantify the degree of difference among alternatives.

Table 12 presents a comparison of the order-of-magnitude economic costs for the alternatives assessed. Both present value and annual costs are included in Table 12 for the collection, conveyance, treatment and disposal system components. Alternative B, which represents an interim plan if funding is limited, is included in Table 12 for comparison with other options. Alternative C-3 is the lowest cost plan which has a complete collection and conveyance system. However, Alternative C-3 also represents a short-term option that could be selected if funds are limited.

TABLE 12

ECONOMIC COSTS FOR ALTERNATIVES

	Present Value (LE 10^6)*			Annual Costs ILE 10^6)*		
	Net Capital	O&M	Total	Net Capital	O&M	Total
Alternative B (Partial Treatment & Drain Disposal)	164	20.8	184.8	19.3	2.4	21.7
Alternative C-1 (Secondary Treatment & Drain Disposal)	332	91.9	423.9	39.0	10.7	49.7
Alternative C-2 (Secondary Treatment & Partial Land Disposal)	369	100.4	469.4	43.3	11.8	55.1
Alternative C-3 (Primary Treatment & Drain Disposal)	262	59.6	321.6	30.8	7.0	37.8
Alternative C-4 (Primary & Land Treatment/Disposal)	371	93.0	464.0	43.6	10.9	54.5
Alternative C-5 (Desert Lagoon & Land Disposal)	375	64.4	439.4	44.1	7.6	51.7
Alternative C-6 (Desert Infiltration & Land Disposal)	451	79.1	530.1	53.0	9.3	62.3

*Costs include collection, conveyance, treatment and disposal at mid-1980 values. Analyses use a 20-year project life and a 10% discount rate (0.7 LE per U.S. $).

Source: AMBRIC and Stanley Consultants.

Economics

Table 13 summarizes the assessments of the economic ranking of the treatment-disposal alternatives. The main economic factor in determining relative ranking is the net annual cost.

Alternative C-3 is ranked highest but it represents an interim plan. Land disposal options, Alternatives C-2, C-4, and C-5, hold the next three positions with agricultural benefits offsetting some of the investment costs. The high investment and pumping costs for Alternative C-6 exceed secondary treatment costs for Alternative C-1, thus placing Alternative C-6 in the lowest rank.

Of secondary importance in ranking alternatives is the operation and maintenance expenditures required, since this will be the Government of Egypt responsibility. Alternatives C-3, C-5, and C-6 represent the least costly operation and maintenance options. Secondary treatment proposed in Alternatives C-1 and C-2 rank lowest as regards operating requirements.

Reliability

Comparisons of treatment-disposal reliability factors are presented in Table 14.

Alternative C-3 is the most reliable system but also the most polluting since it represents an interim plan. Alternative C-5 would be simple and reliable and ranks slightly ahead of Alternative C-4 because of effluent quality for irrigation. Alternative C-1 is judged next most reliable because it contains the complex coupled biofilter and activated sludge system and it will require significant resources for adequate operation and maintenance. Alternative C-6 ranks low primarily due to lack of experience in Egypt and potential groundwater pollution risks. The least reliable option is Alternative C-2 which combines the complex treatment plant with irrigation system operations.

TABLE 13

ECONOMIC COMPARISON OF TREATMENT-DISPOSAL ALTERNATIVES

	Ranking Comparisons**					
	Alt. C-1*	Alt. C-2*	Alt. C-3*	Alt. C-4*	Alt. C-5*	Alt. C-6*
Financial Cost Basis						
Minimize Present Value Capital	High	Medium	High	Medium	Medium	Low
Minimize Annual O&M	Medium	Low	High	Medium	High	High
Minimize Total Life-Cycle	High	Medium	High	Medium	Medium	Low
Economic Cost Basis						
Minimize Present Value Capital	High	Medium	High	Medium	Medium	Low
Minimize Annual O&M	Medium	Low	High	Medium	High	High
Minimize Total Life-Cycle	High	Medium	High	Medium	Medium	Low
Economic Benefits & Costs						
Maximize Annual Agricultural Benefits	Low	Medium	Low	High	High	High
Minimize Net Annual Project Cost	Medium	Medium	High	Medium	High	Low
Ranking of Alternatives	5	4	1	3	2	6

*C-1 = Secondary Treatment & Drain Disposal; C-2 = Secondary Treatment & Partial Land Disposal; C-3 = Primary Treatment & Drain Disposal; C-4 = Primary & Land Treatment/Disposal; C-5 = Desert Lagoon & Land Disposal; C-6 = Desert Infiltration & Land Disposal.

**Alternative rankings are relative to each other with "1" being the most desirable option and "6" the least desirable option.

Source: Stanley Consultants.

TABLE 14

RELIABILITY COMPARISON OF TREATMENT-DISPOSAL ALTERNATIVES

	Ranking Comparisons**					
	Alt. C-1*	Alt. C-2*	Alt. C-3*	Alt. C-4*	Alt. C-5*	Alt. C-6*
Minimize Personnel and Management Requirements	Medium	Low	High	Medium	High	Medium
Dependence on Equipment, Parts, and Supplies	Low	Low	Medium	Medium	High	Medium
Potential Reliable Process Performance	Medium	Low	High	Medium	Medium	Low
Minimize Environmental and Financial Consequences	Medium	Medium	Medium	Medium	Medium	Low
Ranking of Alternatives	4	6	1	3	2	5

*C-1 = Secondary Treatment & Drain Disposal; C-2 = Secondary Treatment & Partial Land Disposal; C-3 = Primary Treatment & Drain Disposal; C-4 = Primary & Land Treatment/Disposal; C-5 = Desert Lagoon & Land Disposal; C-6 = Desert Infiltration & Land Disposal.

**Alternative rankings are relative to each other with "1" being the most desirable option and "6" the least desirable option.

Source: Stanley Consultants.

Public Health

Table 15 summarizes the potential impacts of the various treatment-disposal alternatives on public health.

Alternative C-6 ranks high because wastewater is removed from drain disposal and the high quality treated effluent minimizes risks of worker exposure and crop production. Alternatives C-1 and C-2 provide a high degree of treatment prior to drain or land disposal. Thus, assuming reliable treatment operations, these alternatives are judged slightly higher than Alternatives C-3, C-4 and C-5 which provide lower levels of treatment prior to discharge or irrigation use.

Alternatives C-4 and C-5 are close in rank, but better than Alternative C-3 which discharges a primary effluent to the drains and the Nile River.

Institutional/Social

Summarized in Table 16 is a comparison of the institutional factors related to treatment-disposal alternatives.

Alternative C-6 ranks high primarily because of opportunities to meet national policy goals and maintain cultural/aesthetic values. This high ranking occurs despite the rather significant organizational requirements necessary to implement the land treatment and disposal scheme. Alternatives C-4 and C-5 rank relatively high due to satisfaction of national policy goals and the lower level of skilled labor supply required. Alternative C-2 ranks higher than C-3 and C-1, primarily due to achievement of national policy goals and cultural values. Even though Alternative C-3 fails to meet national policy goals, it does have a reduced commitment to a skilled labor force and simpler organizational requirements in comparison with Alternative C-1. Assuming the Zenein treatment plant is rehabilitated to provide secondary treatment, only Alternative C-3 would require a temporary waiver of existing Egyptian wastewater discharge criteria.

Summary Comparison

Comparisons of the economics, reliability, public health and institutional/social rankings of the various treatment and disposal alternatives are presented in Table 17.

TABLE 15

PUBLIC HEALTH COMPARISON OF TREATMENT-DISPOSAL ALTERNATIVES

	Ranking Comparisons**					
	Alt. C-1*	Alt. C-2*	Alt. C-3*	Alt. C-4*	Alt. C-5*	Alt. C-6*
Produce maximum health benefits by pathogen removal	Medium	Medium	Low	Low	High	High
Minimize occupational hazard	Low	Low	Medium	Medium	Medium	Medium
Reduce exposure of general public	Low	High	Low	High	High	High
Avoid deterioration of present disposal pathways	Medium	High	Low	Medium	Medium	High
Minimize transfer of problems to disposal areas	High	Medium	High	Low	Low	Medium
Avoid creation/extension of vector habitat	High	Medium	High	Medium	Low	Medium
Avoid temporary hazards	High	Medium	High	Medium	Low	Medium
Ranking of Alternatives	3	2	6	5	4	1

*C-1 = Secondary Treatment & Drain Disposal; C-2 = Secondary Treatment & Partial Land Disposal; C-3 = Primary Treatment & Drain Disposal; C-4 = Primary & Land Treatment/Disposal; C-5 = Desert Lagoon & Land Disposal; C-6 = Desert Infiltration & Land Disposal.

**Alternative rankings are relative to each other with "1" being the most desirable option and "6" the least desirable option.

Source: Stanley Consultants.

TABLE 16

INSTITUTIONAL/SOCIAL COMPARISON OF TREATMENT-DISPOSAL ALTERNATIVES

Criteria	Ranking Comparisons**					
	Alt. C-1*	Alt. C-2*	Alt. C-3*	Alt. C-4*	Alt. C-5*	Alt. C-6*
Meeting national policy goals	Low	Medium	Low	High	High	High
Cultural/aesthetic values maintained	Medium	High	Low	High	Medium	High
Minimum skilled labor needs	Low	Low	Medium	Medium	High	High
Minimum organizational complexity	High	Medium	High	Low	Low	Low
Ranking of Alternatives	6	4	5	3	2	1

*C-1 = Secondary Treatment & Drain Disposal; C-2 = Secondary Treatment & Partial Land Disposal; C-3 = Primary Treatment & Drain Disposal; C-4 = Primary & Land Treatment/Disposal; C-5 = Desert Lagoon & Land Disposal; C-6 = Desert Infiltration & Land Disposal.

**Alternative rankings are relative to each other with "1" being the most desirable option and "6" the least desirable option.

Source: Stanley Consultants.

TABLE 17

SUMMARY COMPARISON OF TREATMENT-DISPOSAL ALTERNATIVES

	Economic Rank*	Reliability Rank*	Public Health Rank*	Institutional/ Social Rank*
Alternative C-1 (Secondary Treatment & Drain Disposal)	5	4	3	6
Alternative C-2 (Secondary Treatment & Partial Land Disposal)	4	6	2	4
Alternative C-3 (Primary Treatment & Drain Disposal)	1	1	6	5
Alternative C-4 (Primary & Land Treatment/Disposal)	3	3	5	3
Alternative C-5 (Desert Lagoon & Land Disposal)	2	2	4	2
Alternative C-6 (Desert Infiltration & Land Disposal)	6	5	1	1

* Overall rankings from tables in preceding sections of this chapter. Alternative rankings are relative to each other with "1" being the most desirable option and "6" the least desirable option.

Source: Stanley Consultants.

Each of the alternatives has strong and weak points. Alternative C-3 is low in cost and highly reliable because of minimal treatment and disposal facilities. However, it is only considered as interim plan, thus its desirability from the public health and institutional standpoint are low. In contrast, Alternative C-6 ranks rather low from the economic and reliability standpoint, but has strong public health and institutional advantages. Other alternatives show a more intermediate ranking across the four major areas.

Selection of a particular plan for implementation requires consideration of the assessments and rankings presented herein, as well as other information which is not included as a part of this study effort. For

example, if funds are severely limited, then the system with low initial capital costs and/or low life-cycle costs would be more desirable than other choices, at the expense of reliability, public health, and institutional factors. If the Government of Egypt makes a strong commitment to finance wastewater treatment facilities; provides for training operational, maintenance, and management personnel; and establishes the appropriate organizational framework; then any selected alternative would likely have a better chance of success than one which the Government of Egypt does not give full institutional backing.

From a public health standpoint, all of the alternatives provide for achieving potential public health benefits. As indicated earlier, numerous other public health programs need to be initiated in order to actually realize the benefits from improvements in wastewater system management. Here again, the commitments the Government of Egypt is willing to make for related public health programs may dictate one specific alternative as being more or less desirable than another.

Reliability of the treatment and disposal systems implemented must receive extremely high priority by the Government of Egypt. The proposed program is very large and failure to provide the suitable programs necessary to insure reliability of system performance once it is built could cause major environmental impacts. Reliability choices among alternatives basically revolve around which systems can really be made to function properly in Egypt.

In summary, the priorities and commitments which the Government of Egypt and funding agencies, such as AID, place upon various elements of the program will dicate the plan which best suits area needs.

ان جميع النظم المعروضه للمعالجه والتخلص من مياه الصرف الصحى لهـــا حساناتها ومساؤها من حيث اثرها البيئى كمثال لذلك البدائل (ج ٣) يعتبر الاقل تكلفه والاكثر وثوقا ولكن له اثار جانبيه من حيث الصحه العامه والتنظيم والعكس فى حاله البديل (ج ٦) اما البدائل الاخرى فتعتبر حلا وسطا بين المعاييـر الاربعه •

ان اختيار الخطه النهائيه القابله للتنفيذ للمعالجه والتخلص من مياه الصرف الصحى فى البر الغربى تعتمد اساسا على اولويات والتزامات الحكومه المصريه والهيئه الامريكيه للتنميه الدوليه • ان العوامل الاقتصاديه ودرجه الاستيثاق يجب ابرازها بدرجه كافيه للتأكد من ان النظام المطبق يحتوى على تكلفه فعاليه ونظام جيد للتشغيل فى حالوجود تمويل كافى والتزام قوى من حيث فعاليه تشغيل النظـــام عند اتمامه فان اى من البدائل المطروحه يمكن اختيارها ولكن نقص الحافز والالـتزام من اى من الجهات المشتركه فى البناء والتشغيل والاداره والمتابعه سوف يـــؤدى الى مخاطر بيئيه كما هو موضح فى هذه الدراسه •

جـــــــدول (٣٠١)

ترتيب بدائل المعالجه والتخلص من حيث الاثر البيئى

البدائل / المعايير	الرتبه فى المعيار الاقتصادى	الرتبه فى درجه الاستيثاق	الرتبه فى الصحه العامه	الرتبه فى التنظيم الاجتماعى
البديل (ج ١) معالجه ثانويه وتخلص فى المصرف	٥	٤	٣	٦
البديل (ج ٢) معالجه ثانويه وتخلص جزئى فى التربه	٤	٦	٢	٤
البديل (ج ٣) معالجه اوليه مع صرف فى المصارف	١	١	٦	٥
البديل (ج ٤) معالجه اوليه مع معالجه وتخلص فى التربه	٣	٣	٥	٣
البديل (ج ٥) معالجه عن طريق اللاغون فى الصحراء والتخلص فى التربه	٢	٢	٤	٢
البديل (ج ٦) المعالجه عن طريق الترشيح الصحراوى والتخلص فى التربه	٦	٥	١	١

* ترتيب البدائل متناسب مع بعضه البعض من حيث ان الترتيب (١) يعتبر الاكثر تفضيلا والترتيب (٦) الاقل تفضيلا (المصدر : بيت الخبره استانلى) .

لانشاء تسهيلات للمعالجه الثانويه الكامله • وهذا البديل يتطلب استثناء من الاحكام الرسميه الخاصه بنوعيه المياه الملقاه فى النيل وهذا الاستثناء لن يأتى من وزاره الرى ولا من هيئه مياه مجارى القاهره الكبرى ويتطلب موافقه من جهه اعلى : البديل (ج ٤) يشمل على جمع ونقل مياه الصرف الصحى الى محطه زينين والى محطه جديده للمعالجه الاوليه فى ابو رواش • والتخلص من مياه الصرف الصحى فى ابو رواش سوف تعالج اهاقيا فى الصحراء وهذا البديل يتلائم مع معايير الحكومه • البديل (ج ٥) يشتمل على جمع ونقل مياه الصرف الصحى الى محطه زينين والاستمرار فى التخلص من الرواسب فى ابورواش فقط • ومياه الصرف الصحى الغير معالجه فى محطه زينين • سوف يتم التخلص منها فى الاماكن المحدده فى الصحراء حيث تعالج فى اللاغونات ومياه اللاغونات سوف تضخ الى الاراضى لتستخدم فى الانتاج الزراعى وهذا البديل يتلائم مع معايير الحكومه • البديل (ج ٦) هو نفسه البديل (ج ٥) مع اختلاف ان معالجه مياه الصرف الصحى فى الصحراء سوف يكون عن طريق تسرب المياه فى التربه عن طريق ترشيح وبعد ذلك تجمع فى مصارف عميقه او فى مصادر المياه الجوفيه •

والمياه المعالجه سوف تستخدم لرى الاراضى الزراعيه • ان جمع ونقل ومعالجه والتخلص فى هذه البدائل ملخصه فى الجدول (١-١) وكل بديل للجمع والتخلص قد قيم طبقا للمعايير الاربعه الاقتصادى وهرجه الاستيثاق والصحه العامه والتنظيم الاجتماعى • كما كان الحال عند تقييم بدائل الجمع فان رأى الخبراء قد اخذ عند تقييم بدائل المعالجه والتخلص من مياه الصرف الصحى • وهذا التقييم يعتبر مرشد عند اختيار البرنامج المفضل ولا يعتبر اساسا لاقتراح خطه محدده • الجدول (١-٣) يعطى تلخيص ترتيب بدائل المعالجه والتخلص من مياه الصرف الصحى من حيث الاثر البيئى •

البديل (ج) للجمع قد ادمج مع ست بدائل للمعالجه والتخلص وذلك لتقييم الاثار البيئيه :-

البديل (ج ١) معالجه ثانويه مع التخلص في المصرف •

البديل (ج ٢) معالجه ثانويه وتخلص جزئي في التربه •

البديل (ج ٣) معالجه اوليه مع صرف في المصرف •

البديل (ج ٤) معالجه اوليه مع معالجه وتخلص في التربه •

البديل (ج ٥) معالجه عن طريق اللاغون في الصحراء والتخلص في التربه •

البديل (ج ٦) معالجه عن طريق الترشيح الصحراوي والتخلص في التربه •

كل هذه البدائل تفترض ان كفاءه محطه زينين سوف تتحسن وتطور طبقا لاهداف الحكومه المصريه وسوف نستخلص من المياه الصرف الصحي في مصرف محيط • البديل (ج ١) يشمل على نظام كامل للجمع ونقل مياه الصرف للمعالجه الثانويه في محطه زينين ومحطه معالجه ثانويه جديده في ابو رواش • التخلص من مياه الصرف الصحي المعالجه سوف يكون في مصرف محيط وهذا سوف يلائم تخطيط الحكومه المصريه الموجود حاليا • وهذا البديل هو المطروح عن طريق بيت الخبره اميريك البديل (ج ٢) يشمل على كل مكونات البديل (ج ١) فيما عدا ان بعض مياه الصرف الصحي المعالجه والمصرفه الى مصرف محيط سوف تضخ الى الصحراء في اماكن محدده عن طريق الحكومه المصريه وهذا البديل سوف يساعد على استصلاح الصحراء ويتلائم مع المعايير الرسميه لنوعيه مياه الصرف الصحي •

البديل (ج ٣) يشمل على جمع ونقل مياه الصرف الصحي الى محطه زينين والى ابو رواش للمعالجه الاوليه • والتخلص من مياه الصرف الصحي المعالجه في ابو رواش سوف يكون في مصرف المحيط طريق مصارف كوم بركات رمال هذا البديل يعتبر حلا مؤقتا ويمكن تنفيذه في حاله عدم وجود تحويل كافي

البديل (ج) هو الاكثر تفضيلا اذا توافرت الامكانيات الماديه • حيث ان البديل (ج) يوفر نظام جمع ونقل كامل الى مكان المعالجه • لقد ارتبط هذا البديل مع عده بدائل للمعالجه والتخلص لمزيد من التحليل واذا لم تتوفر الامكانيات الماديه لتنفيذ البديل (ج) فيمكن الاستعاضه عنه بالبديل (ب) •

اثار نظام المعالجه والتخلص :

هناك عده احتمالات لمعالجه والتخلص من المياه الصرف بالبر الغربي وهناك التزاما قويا من ناحيه الحكومه المصريه فى تخطيط وتحويل وتطوير محطه زينين سوف تتحسن لدرجه كبيره لتوفير معالجه سنويه قبل وصول مياه الصرف الصحى الى مصرف الناحيه •

ان الامكانيات الزائده عن طاقه محطه زينين سوف تحول الى ابو رواش او الى الصحراء لمعالجتها • وفى حاله عدم تطوير محطه زينين او فى حاله عدم تحويل عوادم البر الشرقى التى تذهب الان الى البر الغربى فان الطاقه الاستيعابيه لابورواش والصحراء الموضحه هنا يجب ان تزداد •

ان التخلص من مياه الصرف فى الصحراء عن طريق التبخير والترشيح بدون اعادة استخدام لايعتبر بديلا حتميا حيث ان تكلفه الضخ تملى مزيدا من الاستخدام لفائض المياه فى الاغراض الزراعيه • ولقد اخذ فى الاعتبار ايضا التخلص من مياه الصرف الصحى فى البحر الابيض كبديل ولكن هذا البديل مكلف للغايه ويعتبر مضيعه للثروات الطبيعيه من حيث ان المياه لاتستخدم اى استخدام نافعا • ان البدائل العمليه لمعالجه والتخلص المعروضه للبر الغربى تشتمل على معالجه فى ابورواش او فى الصحراء تتبعها التخلص اما فى قنوات الصرف او فى الاراضى الزراعيه كمياه للرى •

والتخلص فى الصحراء فى الاماكن المحدده على امتداد الطريق القاهره الاسكندريه تعتبر صالحه من حيث انتاج المحاصيل باستخدام مياه الصرف الصحى •

الاكثر تكلفه ولكنه الاعلى من حيث التقييم العام وذلك يرجع الى قدرته الكبيره على تحقيق الصحه العامه وملائمه للنواحى التنظيميه والاجتماعيه •

البديل (ب) يعتبر اكثر وثوقا من البديل (ج) وذلك يرجع لاحتوائه على عدد اقل من محطات الضخ ولان نظام النقل به اقل طولا •

جدول (١-٢)

ترتيب بدائل الجمع من حيث الاثر البيئى

المعيار / البدائل	الرتبه فى المعيار الاقتصادى	الرتبه فى درجه الاستيثاق	الرتبه فى الصحه العامه	الرتبه فى التنظيم والاجتماعى	الرتبه فى الترتيب العام
البديل (أ) (بدون تطوير)	١	٣	٣	٣	٣
البديل (ب) جمع كامل / نقل محدود •	٢	١	٢	٢	٢
البديل (ج) جمع ونقل كامل	٣	٢	١	١	١

* ان الترتيب هنا متناسب مع بعضه البعض بمعنى ان الترتيب (١) هو الاعلى والاكثر تقديرا والترتيب (٣) هو الاقل تفضيلا (المصدر : بيت الخبره استانلى)

ان تقييم هذه البدائل الثلاثه يعتمد اساسا على اربعه معايير :

١ — معيار اقتصادى .

٢ — درجه الاستيثاق .

٣ — الصحه العامه .

٤ — النواحى التنظيميه والاجتماعيه .

ان تقييم بدائل الجمع قد اعتمد مبدئيا على رأى الخبراء نتيجه للنقص الشديد فى المعلومات فى كثير من النواحى . والجدول (١-٢) يوضح ترتيب البدائل طبقا لهذه المعايير الاربعه ان الترتيب (١-٢ أو ٣) المعطى لكل بديل يوضح مدى تحقيق البدائل لكل معيار . كمثال لذلك اذا اعطى الترتيب (١) فى المعيار الاقتصادى والمعيار التنظيمى والاجتماعى لاحد البدائل فهذا يوضح ان هذا البديل هو المفضل لانه يعتبر الاقل تكلفه والاكثر ملائمه للنواحى التنظيميه والاجتماعيه السائده . ان الترتيب (١) اذا اعطى للصحه العامه ودرجه الاستيثاق توضح ان هذا البديل يحقق اكبر قدر من الصحه العامه ويعتبر اكثر النظم الموثوق فيها . ويجب الاشاره وتوضيح ان الرتب المعطاه لكل بديل من حيث تحقيقه لاى من المعايير لا يمكن جمعها . بمعنى اخر ان اقل مجموع لهذه الرتب ليس بالضروره يعنى ان هذا النظام هو الافضل بما ان نظام الترتيب المعطى لكل معيار لا يحدد درجه الاختلاف بين البدائل . الجدول رقم (١-٢) يعطى صوره شامله لهذا الترتيب مبنيا على معايير التقييم السالف ذكرها ورأى الخبراء . ان المعيار الاقتصادى يوضح مبدئيا التكاليف الرأسماليه ولا يشمل على الفوائد الغير مبينه كالصحه العامه وغيرها . البديل (ج) يعتبر

جـــــــــدول (١-١)

تابع ملخص جمع ومعالجه التخلص من مياه الصرف الصحى

البديل (الوصف)	عناصر النظام			
	الجمع	النقل	المعالجه	التخلص
(ج ٦) المعالجه عن طريق الترشيح والتخلص فى الترعه •	اضافه وسائل الجمع اميريك الابتدائيه	اضافه ونقل نواتج الجمع طبقا لمقترحات اميريك الى مناطق صحراويه •	اضافه ترشيح صحراوى	مناطق صحراويه للاستصلاح •

* المصدر : بيت الخبره استانلى •

جـــــــــــدول ١-١

تابع ملخص بدائل جمـــع ومعالجـــه التخلص من مياه الصرف الصحى

البديل (الوصف)	عنـــاصر النظـــــام			
	الجمـــع	النقـــــل	المعالجـــه	التخلـــص
(ج ٢) معالجه ثانويه وتخلص جزئى فى التربـــه	اضافه وسائل الجمـــع امبريك الابتدائيه	اضافه نقل نواتج الجمع طبقا لمقترحات امبريك الى ابورواش والمحيط للصحراء •	اضافه معالجه ثانويه فى ابورواش •	من ابورواش الى المصرف والصحراء لاستطلاح الاراضى
(ج ٣) معالجه اوليه والتخلص فى المصـــرف	اضافه وسائل الجمـــع امبريك الابتدائيه	اضافه ونقل نواتج الجمـــع طبقا لمقترحات امبريـــك الى ابو رواش	اضافه معالجه اوليه فى ابو رواش	من ابورواش الى المصرف
(ج ٤) معالجه أوليه مـــع التخلص فى التربـــه	اضافه وسائل الجمع امبريك الابتدائيه	اضافه ونقل نواتج الجمـــع طبقا لمترحات امبريـــك الى ابورواش ومناطق صحراويه	اضافه معالجه اوليه فى ابورواش واستعمال الاراضى الصحـــراويه لمزيد من المعالجه •	ابو رواش الى المناطـــق الصحراويه للاستصـــلاح الزراعى •
(ج ٥) المعالجه عن طريق اللاغون فى الصحراء والتخلص فى التربـــه	اضافه وسائل الجمع امبريك الابتدائيه	اضافه ونقل نواتج الجمـــع طبقا لمقترحات امبريك الى المناطق الصحراويه •	اضافه لاغون الـــى المناطق الصحراويه	مناطق صحراويه للاستصلاح

جـــــــــــــدول ١-١

ملخص بدائل جمع ومعالجه والتخلص من مياه الصـــــــــرف الصحـــى

البديل (الوصف)	عنـــاصـــــر النظـــــام			
	الجمـــع	النقـــــل	المعالجـــه	التخلـــــص
(أ) الوضع الحالى	النظام القائـــــم	النظام القائـــــم	معالجه اوليه فى ناحيا معالجه اوليه فى زينين تجفيف الرواسب فى ابورواش	الى المصرف بعد المعالجه الى المصرف بعد المعالجه نقل الرواسب الى ابورواش والاستخدام الزراعى •
(ب) الجمع الكامـل والمعالجه الجزئيه	اضافه وسائل الجمـــع اميريك الابتدائيه •	اضافه وسائل نقل طبقـا لمقترحات اميريك الـى مصرف المحيظ •	الغاء وحده ناحيا وتطوير وتوسيع وحده زينين لتحقيق معالجه ثانويه •	من زينين الى المصرف وسائل جمع اميريك الى المصرف مباشره
(ج) جمع ومعالجه كامله •	اضافه وسائل الجمـــع اميريك الابتدائيه	اضافه وسائل نقل طبقـا لمقترحات اميريك الـــى المناطق المعالجه •	الغاء وحده ناحيا وتطويـر وتوسيع وحده زينين لتحقيق المعالجه الثانويه ومحطات اخرى طبقا للاتى ذكرها	من زينين الى المصـــــرف ومحطات اخرى الاتـــــى ذكرهـــا •
(ج ١) المعالجه الثانويه والتخلـص بالمصارف	اضافه وسائل الجمـــع اميريك الابتدائيه	اضافه نقل نواتج الجمـع طبقا لمقترحات اميريك الى ابو رواش •	اضافه معالجه ثانويـــه فى ابو رواش •	من ابورواش الى المصرف •

بما يسمح باجراء معالجه ثانويه • ومع ذلك فلن يتطلب الامر انشاء وحدات معالجه اضافيه كما ان مياه المجارى التى لا تعالج فى زينين سوف تصرف فى شبكه ناحيا والمحيط •

ويعد هذا البديل كحل مبدئى يتم تنفيذه فى حاله عدم توفر التمويل اللازم لتطبيق نظام اكثر شمولا للجمع والمعالجه والتخلص " البديل ج كما سيلى " وسيتطلب الامر فى تلك الحاله الاعفاء المؤقت فى مواصفات طرد مياه الصرف وذلك على مستوى حكومى أعلى من وزاره الرى والهيئه التنفيذيه لمشروع مجارى القاهره الكبرى •

وعند تطوير وتوسيع تطبيق البديل (ب) سيتم تحقيق المعالجه الكامله وتحقيق متطلبات الحكومه المصريه فيما يتعلق بمعايير ومواصفات طرد مياه الصرف الصحى وذلك عند توافر الاعتمادات اللازمه •

ويشتمل البديل (ج) قيام نظام اولى لجمع وتوصيل مياه المجارى بصوره كامله طبقا لمقترحات بيت الخبره اميريك وتطوير وتوسيع مدى خدمه محطه زينين بما يحقق المعالجه الثانويه • هذا بالاضافه الى انشاء مرافق للمعالجه الاضافيه والتخلص من الرواسب فى منطقه ابو رواش او فى مناطق صحراويه •

ويوضح الجدول ١٠١ النظام البديله لجمع ونقل مياه الصرف الصحى •

والحوافز ، هذا بالاضافه الى نقص الاعتمادات وقطع الغيار • وتلك كلها عوامل ستؤدى الى استمرار تدهور الوضع الحالى اذا لم يؤخذ التطور فى الاعتبار •

اثار بدائل الجمـــع :

ان الاولويه فى التطوير يجب ان تكون عن طريق نظام تقليدى لجمع ميـــاه الصرف الصحى فنقل مياه الصرف الصحى من المناطق ذات الكثافه السكانيه العاليه سيؤدى الى التقليل من الاصابه بالامراض وذلك كمرحله اولى قبل وضع برامج المعالجه الشامله • ويجب الاشاره هنا الى ان القاء مياه الصرف الصحى فى المصارف الملوثه حاليا سيكون له تأثيرا محدودا على المدى القصير لحين البدأ فى برامج المعالجه الشامله •

وفيما يلى عرضا لثلاثه نظم بديله تختص بتجميع مياه الصرف الصحى والمقيمه فى هذه الدراسه:

البديل " أ " : عدم التطوير والابقاء على الوضع الحالى •

البديل "ب" : الجمع الكامل والنقل المحدود •

" حدانى فى المعامله والتخلص بالصرف فى المصـــارف الزراعيه "

البديل "جـ" : جمع ونقل كامل " بما فى ذلك المعامله "

ان البديل " أ " هو استمرار الوضع الحالى وهذا يعنى استمرار نظم الجمـــع والنقل والمعامله والصرف القائمه والتى تخدم جزء محدود من سكان الضفه الغربيه •

وتتضمن هذه النظم معامله اوليه لمياه الصرف الصحى فى كل من محطتى ناحيا وزينين حيث يتم التخلص فى مصرفى ناحيا ومحيط • والرواسب الناتجه تنقل الى منطقه ابو رواش •

حيث يجفف هوائيا ويباع للمزارعين •

ويشمل البديل (ب) على انشاء نظام جمع اولى كامل لمياه المجارى طبقا لمقترحات بيت الخبره امريك بالاضافه الى اجراء تطوير وزياده كفاءه وحده زينـــين

او معالجه بصوره محدوده فى مصرفى ناحيه والمحيط وهى بصوره اساسيه مصارف غير مغطاه وحيث تصل هذه النواتج فى النهايه الى فرع رشيد ٠

وبالاضافه الى صعوبات التشغيل والصيانه فى تنظيم الصرف والمعالجه فهناك مشاكل انقطاع التيار الكهربى هذا فضلا عن ان الطلب المتزايد على الطاقه الكهربائيه فى المنطقه لا يبشر بحدوث تطور فى المستقبل القريب ٠

والمتوقع ان يزيد تدفق مياه الصرف الصحى فى الضفه الغربيه من حوالى ٣٢٦٫٠٠٠ متر مكعب يوميا عام ١٩٨٥ الى حوالى مليون م ٣ يوميا عام ٢٠٠٠ وتتميز مياه الصرف بانها ذات قوه عاليه نسبيا ولا تشكل مياه الصرف الصناعى جزء كبيرا من التدفق الكلى ٠ ويتم على نطاق محدود معالجه مبدئيه للصرف الصناعى وذلك قبل تصريفها الى شبكه المجارى العموميه ٠ وبصوره عامه فان الصرف الصناعى لا يمثل خطوره لابطال معالجه مياه المجارى او الرواسب فى مرافق الضفه الغربيه ٠

اثار عدم التطوير :

ان الظروف المتعلقه بالصحة العامه فى القاهره تعد غير مرضيه فمعدل الوفيات بين الاطفال والذى يقرب من ١٠٠ حالوفاه من كل الف طفل ولاده تعد من اعلى المعدلات فى العالم ٠ ويعزى الجزء الاعظم من نسبه الاصابه بالامراض والوفيات الى عوامل مرتبطه بالمياه وعدم كفاءه الصرف الصحى ٠

ان الهدف الاساسى لتطوير نظام الصرف الصحى لمدينه القاهره هو تحيز الظروف المرتبطه بالصحه العامه والناحيه الجماليه ٠ وبدون ذلك التطور فان الموقف الحالى سوف يتدهور مستقبلا للزياده التى سوف تحدث فى تعداد كثافه السكان الخاصه بالصرف الصحى والناتجه فى الوقت الحاضر ٠

ان المرافق تعمل بالحشد من طاقتها كما انها لا تعمل على اسس سليمه ويزداد الامر تعقيدا ٠ بالمصاعب الخاصه بالاداره واعمال التشغيل والصيانه وعدم وجود العماله المدربه وهجره العناصر ذات الكفاءه والخبره وانخفاض الاجور

تعداد السكان فى منطقه الدراسه من ٧٫٤ مليون الى ١٣٫٦ مليون نسمه فى نفس الفتره الزمنيه ٠

فى بعض المناطق الحضريه تصل كثافه السكان الى ١٫٥٠٠ نسمه فى الهكتار اخذا فى الاعتبار المناطق التى لاتصل اليها النظم التقليديه للصرف الصحى ومن المتوقع ان تتزايد كثافه السكان فى الضفه الغربيه حتى عام ٢٠٠٠ ٠ وبالنسبه لاستخدام الارض فمن المتوقع ان تصل المناطق السكنيه الى حوالى ثلاثه ارباع والربع الباقى مخصص للانشطه التجاريه والحكوميه والصناعيه ٠

حاله المرافق :

ان حاله شبكه توصيل مياه الشرب فى القاهره تعد متطوره نسبيا حيث يتمتع جزء كبير من الضفه الغربيه بصوره ما من هذه الخدمه ٠ وبصوره عامه فان نظام توزيع المياه قد نما بمعدل اسرع بالمقارنه بالنمو الحادث فى مرفق المجارى ٠ هذا وتفتقر مناطق كثيره وبصوره حاده الى خدمات التخلص من مياه الصرف الصحى ، فاما تنعدم خدمه الصرف الصحى تماما او ان تكون بصوره غير كافيه ٠

وفى عديد من المناطق نلاحظ انسداد خطوط المجارى وطفحها واغراق الشوارع كما ان عدم تنظيف خطوط المجارى ، والقاء القمامه الصلبه فيها بالاضافه الى قله كفاءه النظم تعد عوامل مشاركه فى هذا الوضع المؤسف ٠

وتتم معالجه مياه الصرف الصحى الخاصه بالضفه الغربيه فى وحده زينين التى تبلغ قدرتها ٢٢٠٠٠ متر مكعب يوميا تقريبا ٠ وقد انشأت وحده زينين كمحطه للمعالجه السنويه عن طريق الرواسب المتفاعله وقد انشأت منذ ١٠ سنوات حيث ترفع الرواسب فى خط مواسير الى الصحراء فى منطقه ابو رواش لتجفيفها واستخدامها فى النشاط الزراعى ولسبب تحميلها الزائد واسباب فنيه واداريه فان المحطه لاتقوم بالمعالجه اللازمه ٠

وتلقى مياه الصرف الصحى والناتجه من الضفه الغربيه بدون معالجه

ملخـــــــص

البرنامج المقترح :

ان الامكانيات المتاحه والخاصه بجمع ومعالجه مياه الصرف الصحى والتخلص منها فى مدينه القاهره قد اهملت لسنوات عديده الامر الذى لم يتمشى مع التطور الحضرى المطرد • ولذا فقد اقترح برنامج ضخم يتطلب حجما كبيرا من الانشاءات والتشغيل وعمليات الصانه بقصد حل المشاكل القائمه ومجابهه المشاكل المستقبلـه حتى عام • ٢٠١ • ونتيجه لحجم العمليات عده مراحل لتنفيذ برنامج التطوير • وهذه الدراسه تتضمن تقيم للمرحله الاولى تهدف الى تطوير البر الغربى والشرقى من القاهره الكبرى • وهذا البحث يخص الضفه الغربيه فقط •

حيث ان مصدر التمويل المخصص لها من قبل الحكومه المصريه يأتـــى من الهيئه الامريكيه للتنميه الدوليه •

وطبقا للبند 22 CFR 216 ضمن " برنامج المساعدات المخصصه للبيئـــه (فى ٢٣ اكتوبر • ١٩٨) فانه يتعين على الهيئه الامريكيه للتنميه الدوليـــة ان تعد تقيما بيئيا لكل المشاريع التى قد يكون لها تأثير معنويا على البيئـــه • وفى هذا فان حجم وابعاد برنامج تطوير معالجه مياه الصرف تعكسان اثرا بيئيـــا كبيرا • وتقدر تكاليف الانشاءات فى المرحله الاولى بـ ٢ر١ بليون جنيه مصـــرى اى حوالى ٧ ر١ بليون دولار امريكى •

وبصوره عامه يمكن قصر الاثر البيئى فى النقاط التاليه :

١ ــ تتابع انشاء المرافق •

٢ ــ بدائل معالجه مياه الصرف الصحى •

٣ ــ بدائل التخلص من مياه الصرف الصحى •

التنميه الحضريـــه :

من المتوقع ان يصبح تعداد السكان فى الضفه الغربيه لمنطقه الدراســه من ٨ر١ مليون نسمه عام • ١٩٨ الى ٢ر٣ مليون نسمه عام ٢٠٠٠ • وان يزيـــد

الفصل الخامس : الاثار البيئيه للمعالجه والتخلص :

معايير مقارنه البدائل • 34
الجوانب الاقتصاديه • 36
درجه الاستيثاق • 36
الصحه العامه • 39
الجانب التنظيمى والاجتماعيى • 39
ملخص المقارنه • 39

الجـــدول

١٧ جدول

الاشكـــال

١٢ شكـــل •

بدائل المعالجه • 15
بدائل التخلص • 16
وصف بدائل المعالجه • 16

الجمـــع :

البديل (أ) استمرار الوضع الحالى • 16
البديل (ب) الجمع التام والنقل المحدود (اقل معالجه والصرف فى المصارف الزراعيه) ... 19
البديل (جـ) الجمع والنقل التام • (بدائل من ١ — ٦) ... 20

المعالجه والتخلص :

البديل ج ١ معالجه ثانويه مع صرف فى المصارف • 21
البديل ج ٢ معالجه ثانويه مع تخلص جزئى فى التربـــه • 21
البديل ج ٣ معامله اوليه مع صرف فى المصارف • 22
البديل ج ٤ معالجه اوليه مع معالجه وتخلص فى التربـــه • ... 23
البديل ج ٥ المعالجه عن طريق اللاغون فى الصحراء والتخلص فى التربـــه • 24
البديل ج ٦ المعالجه عن طريق الترشيح الصحراوى والتخلص فى التربـــه • 25

الفصل الرابع : الاثار البيئيه لبدائل الجمع :

معايير مقارنه البدائل • 26
الجوانب الاقتصاديه • 27
درجه الاستيثـــاق • 29
الصحه العامـــه • 29
الجانب الاجتماعى والتنظيمى • 31
ملخص المقارنه • 31

الملخص التنفيـــذى

قائمـــه المحتـــويات

الفصل الاول : الهدف والمتطلبات :

متطلبات الهيئه الامريكيه للتنميه الدوليه • 1

الاثار المحتمله ذات الاهميه • 1

البرنامج المقترح لرفع الكفائه • 1

الفصل الثاني : الظروف البيئيـــه :

منطقه الدراسه • 4

التعداد • 4

استخدام الارض 5

امدادات المياه 5

تدفقات وخصائص مياه الصرف • 6

مياه الصرف الصناعى • 6

معالجه مياه الصرف الصحى والتخلص منها • 7

جمع مياه الصرف الصحى • 9

نوعيه الميـــاه • 9

خصائص التربه • 10

الصحه العامه • 10

المؤسسات • 11

مصادر الغذاء • 12

مصادر الطاقه • 12

الفصل الثالث : الخطط البديله لمعالجه الصرف الصحي :

الاكتفاء بالوضع الحالى • 14

بدائل الجمع • 14

الوكالة الأمريكية للتنمية الدولية

الملخص التنفيذى :

التقييم البيئى
لنظام الصرف الصحى فى القاهرة الكبرى
الضفة الغربية

سبتمبر ١٩٨٢

ستانلى كونسالتنت
إستشاريون دوليون فى الهندسة ، العمارة ، التخطيط والإدارة
إتلانتا - برمنجهام - شيكاغو - كليفلاند - إنديانا بوليس
موسكاتين - واشنطون - الأردن - ليبريا - ماليزيا - الفلبين