Water for the World

Installing Hand Pumps

Technical Note No. RWS. 4.C.3

Hand pumps may be used for shallow wells, less than 7m to water, or deep wells. Deep well pumps can be used in many shallow wells and are a good choice because the pump cylinder is in the water. With the cylinder in the water, the pump does not lose its prime and the pump leathers do not dry out. In shallow well pumps, the cylinder is in the pump body above ground.

A hand pump system consists of a hand pump stand, drop pipe, pump rod or sucker rod for deep wells, and a pump cylinder. For shallow wells, the cylinder is part of the hand pump stand. Some hand pump stands lift water to a spout or force it to a higher elevation or to a point located away from the well. Figure 1 shows both shallow well and deep well hand pumps. Hand pumps should be installed according to manufacturer's directions. This technical note only describes the basic steps in hand pump installation.

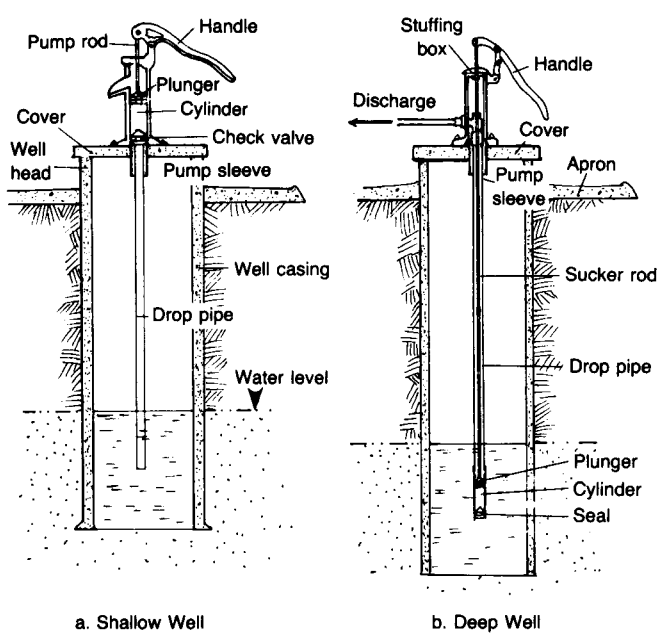

Figure 1. Hand Pump Systems

Useful Definitions

DEEP WELL PUMP - Any pump capable of pumping water from wells where the water level is more than 10m below the ground surface.

DROP PIPE - The pipe in the well connecting the water to the pump.

SUCKER ROD - The rod which connects a windmill or hand pump to the pump cylinder in the well.

In all installations it is important that the water source not be contaminated. The top of the well should be fully enclosed with a well slab placed around the well. Only materials which are clean and made for use in potable water supplies should be used.

In preparing a materials list, careful measurements must be made to ensure sufficient material is available. Prior to cutting material for assembly, it is good practice to again make careful measurements. It is necessary to have the proper tools on site when installation begins. Table 1 lists the materials and tools needed for a typical hand pump installation.

As in all projects, careful preplanning will help assure that installation involves a minimum of wasted time. A sample work plan is shown in Table 2. This plan can be used to estimate the time needed to complete the job and to decide when materials and tools should be available. Figure 2 shows the installation of the drop pipe and cylinder using a tripod. Figure 3 shows the detail of installing a pump sleeve, and Figure 4 shows a finished dug well with a hand pump.

After the pump installation has been completed, but prior to bolting the pump stand to the mounting flange, the

Table 1. Sample Materials List for Hand Pump Installation

Item	Description	Quantity	Estimated Cost
Labor	Foreman Laborers (NOTE: Either the foreman or the laborers must have some experience in cutting and threading pipe)	1 2	____ ____
Supplies	32mm galvanized steel pipe with coupling 10mm galvanized steel pump rod 10mm pump rod couplings Well cylinder Hand pump stand with handle Pump mounting flange Packing material Small can of grease Cutting oil Chlorine solution	____m: enough to reach the desired depth in the well ____m: enough to reach the desired depth in the well ____: one for each joint ____ ____ ____ ____ ____ ____ ____	____ ____ ____ ____ ____ ____ ____ ____ ____ ____
Tools	Portable pipe vise Large pipe wrenches Crescent wrenches (adjustable wrenches) Pliers Hacksaw with spare blades Metal file Pipe cutter Pipe threader, 10mm and 32mm Measuring tape, 3m and 12m Pipe holder Rope and pulley Tripod for lowering pipe Plumb bob and 50m of line	____ ____ ____ ____ ____ ____ ____ ____ ____ ____ ____ ____ ____	____ ____ ____ ____ ____ ____ ____ ____ ____ ____ ____ ____ ____

Total Estimated Cost ____

well should be pumped until the water is clear and a strong chlorine solution should be used to disinfect the well. This is accomplished by raising the pump assembly from the flange and pouring the solution down the well. After 12-24 hours, the well can be pumped out and the water used.

Table 2. Sample Work Plan for Installing a Hand Pump

Time Estimate	Day	Task	Personnel	Tools/Materials
1 hour	1	Delivery materials to site and unload	Foreman and 2 laborers	Shown in Table 1
1 hour	1	Set up tripod	Foreman and 2 laborers	Tripod, wrenches
1 hour	1	Cut and thread pipe and pump rod as measured	Foreman and 2 laborers	Pipe vise, cutter threader, cutting oil
3 hours	1	Attach pump rod and cylinder and lower into well; add pipe and rod as required until desired depth is reached	Foreman and 2 laborers	Pipe, pump rod, pipe holder and pipe wrenches
1 hour	1	Attach pump mounting flange to well casing, screw pipe into bushing and bushing into base of pump stand	Foreman and 2 laborers	Pump mounting flange, pipe bushing, pump stand and wrenches
1 hour	1	Check pump packing and packing nut; lubricate pump bearing points; work pump until water is clear; add chlorine solution to well and let stand overnight	Foreman and 2 laborers	Packing material, grease, wrenches chlorine solution
2 hours	2	Pump well until no chlorine solution remains; attach stand to flange		

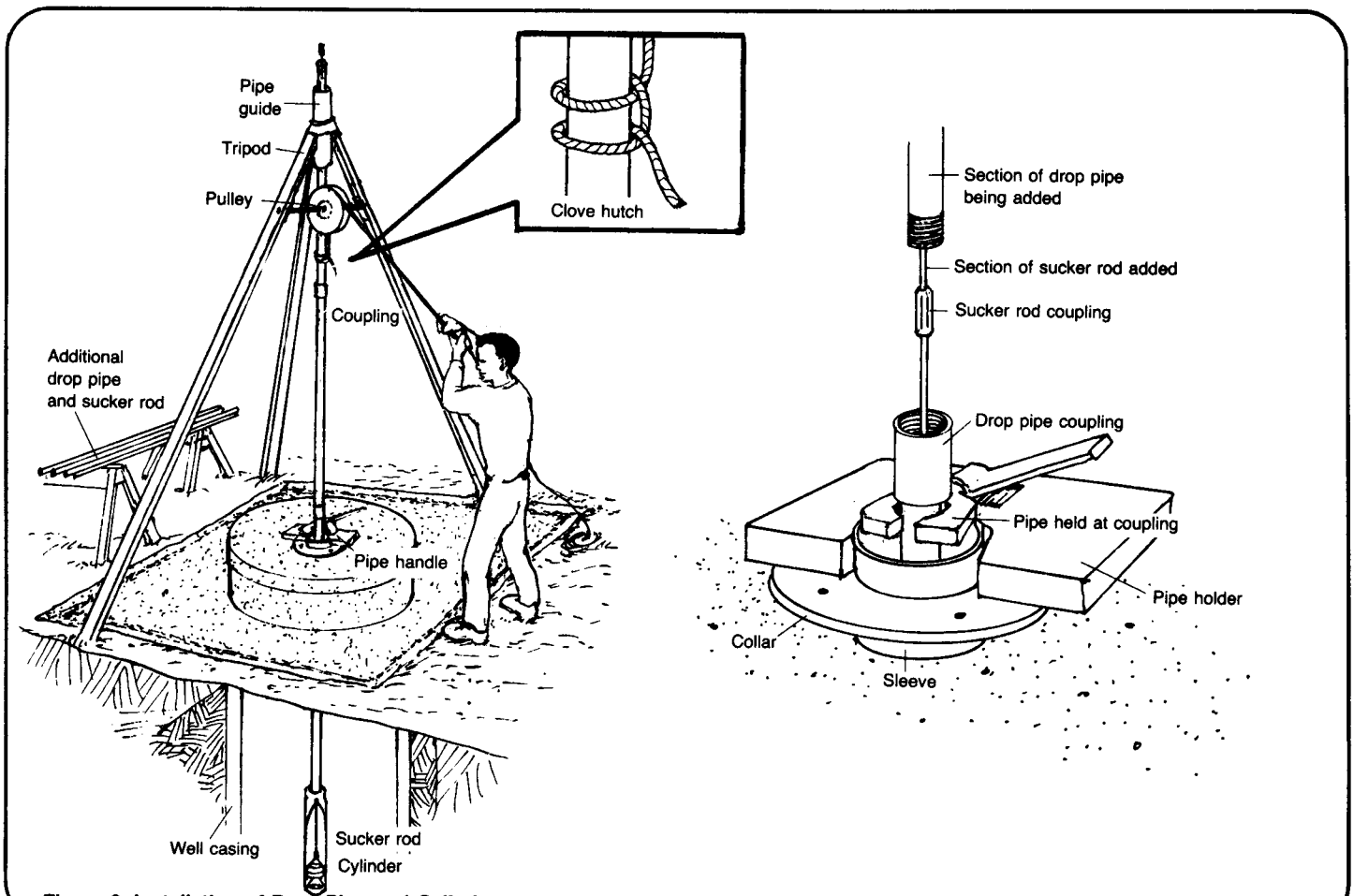

Figure 2. Installation of Drop Pipe and Cylinder

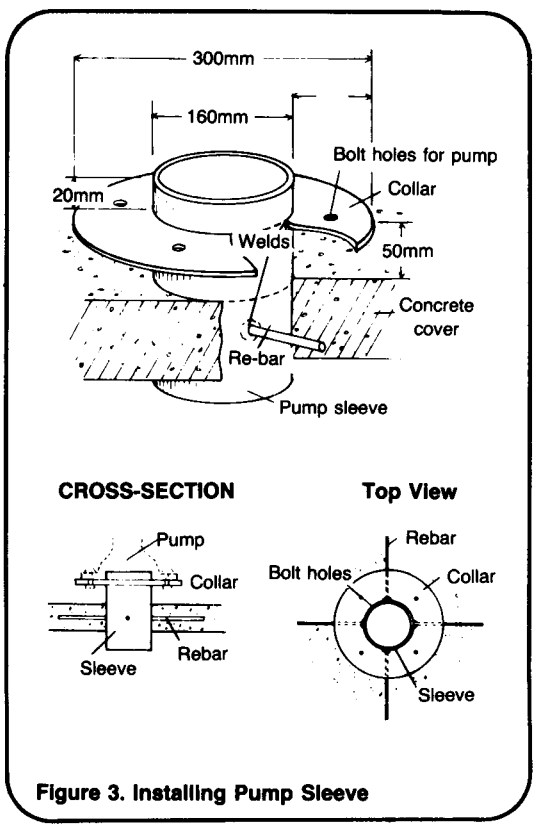

Figure 3. Installing Pump Sleeve

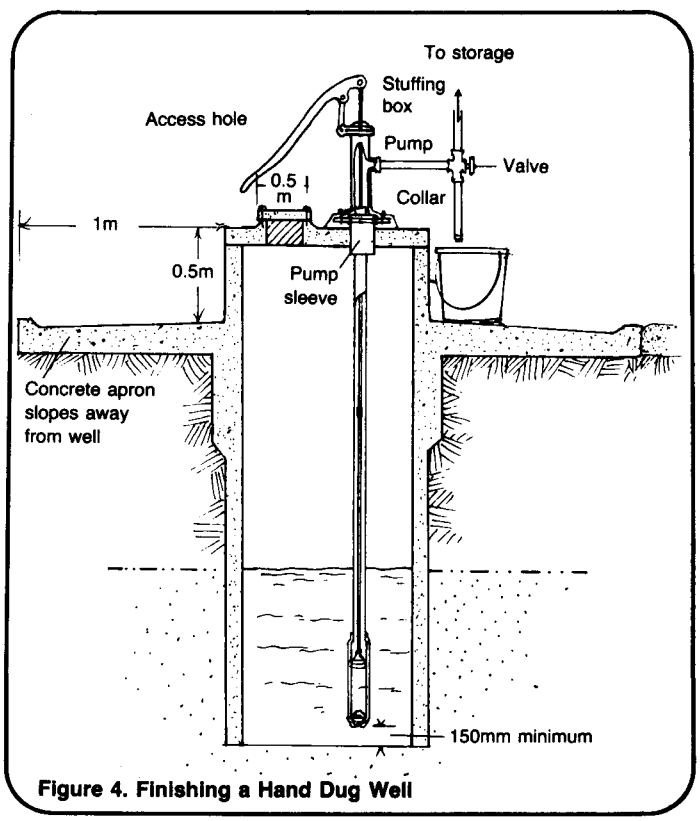

Figure 4. Finishing a Hand Dug Well