Water for the World

Designing a Transmission Main

Technical Note No. RWS. 4.D.3

A water system has several component parts: a source, a transmission delivery line from the source to a point of use or storage, a transmission main from the point of storage to points of use, and the points of use such as service lines or public/communal watering places. Figure 1 shows the parts of a transmission system. Designing a transmission main requires the assistance of an experienced engineer. This technical note only explains the basic steps involved in design.

The design of a delivery line from source to storage is discussed here, in "Determining Pumping Requirements," RWS.4.D.2, for a source using pumps, and in "Designing a System of Gravity Flow," RWS.4.D.1, for water which can be delivered by gravity. The design of distribution systems is covered in "Designing Community Distribution Systems," RWS.4.D.4.

Useful Definitions

GATE VALVE - The type of cutoff valve in a pipeline; when completely open, it provides a low resistance to straight line water flow.

HEAD - Difference in water level between the inflow and outflow ends of a water system.

HEAD LOSS - The head required to overcome friction.

PLAN VIEW - A drawing of a water system, water line or other part of a system as if one were looking down on it.

PROFILE - A cross-sectional view of the route along a water line or pipe.

RESIDUAL HEAD - The head available after all losses are subtracted; also known as dynamic or working head.

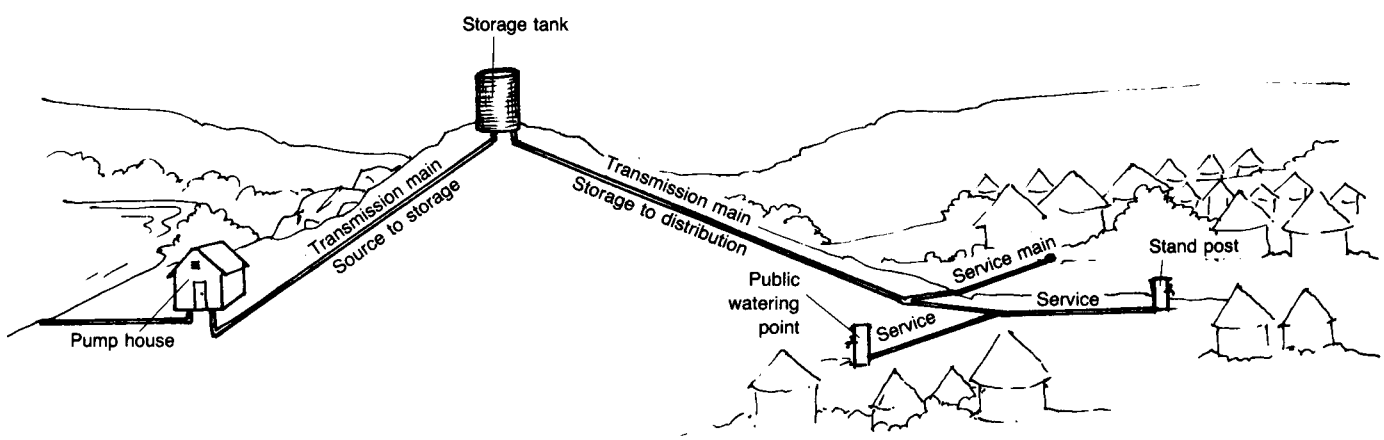

Figure 1. Elements of a Transmission System

There is a different set of factors in the design of a transmission line from the source to storage then from storage to point of use. This difference is in the time in which a quantity of water must be delivered. The transmission line to storage can be designed to provide water for a day's use over a period of several hours to a full 24 hours. This is because the storage tank equalizes the demand for water. The transmission line from the storage tank to the points of use must be sized to carry the instantaneous flow needed at any point in time.

Steps in Design

The first step in designing a transmission main is to obtain a map which shows elevations, obstructions and distances for the area to be served. A typical map is shown in Figure 2. From this, a profile map which identifies the slope of the land should be drawn. Figure 3 is an example of a profile map. This information is identical to that required to design a delivery pipe.

The next step is to estimate the maximum flow demand that the pipe will be expected to carry at any point in time. For transmission from the source to storage, the quantity required over a full day can be figured using Worksheet A. For transmission from storage to distribution, estimate the number of points of use and the expected quantity of water to be used at each point at any given time. This may include a public watering point or points, individual house connections, or both. Table 1 gives estimates of peak demand for individual services. The size of the transmission main usually does not change in a rural distribution system until at least the first point of use. When individual services are taken from a water line, the line then becomes part of the water distribution system rather than a transmission main. A line can serve as a transmission main and a distribution system line when the point of storage is beyond the points of use as shown in Figure 4. Water flows to the tank during low demand periods and flows from the tank to help meet peak demand.

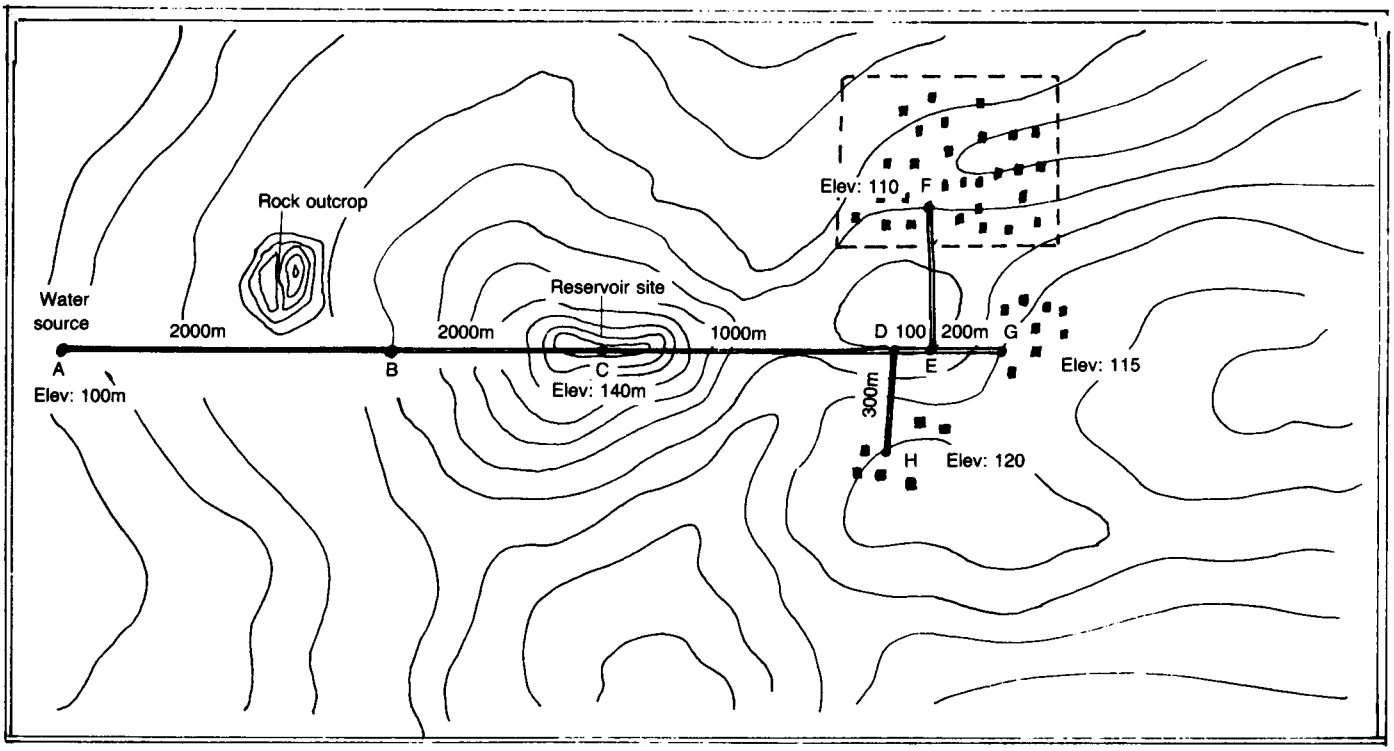

Figure 2. Location Map

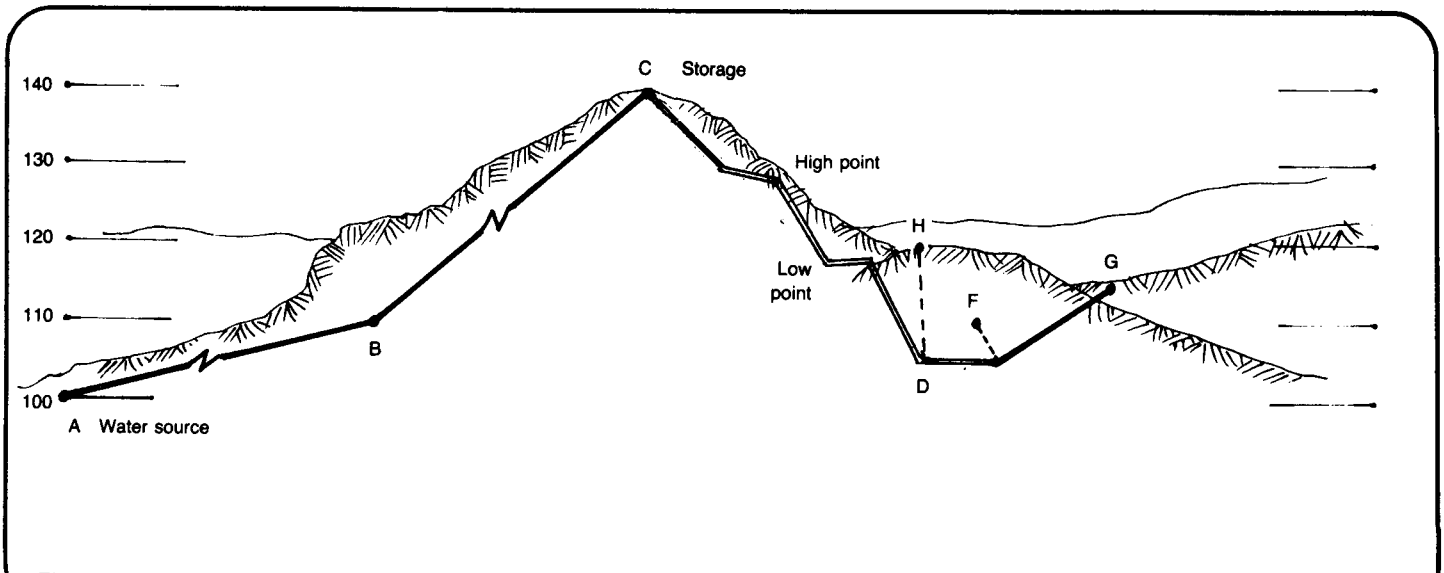

Figure 3. Profile Map

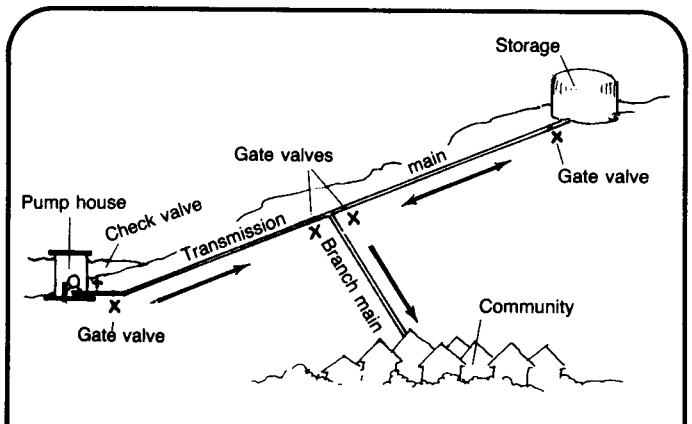

Figure 4. Alternative Piping System

Design Examples

Examples follow for designing a water transmission line from a pump to the storage site and from the storage site to a point of use. For this example, the area to be served includes two small clusters of homes that will be provided public watering points and a group of 30 homes that are to receive individual services. These are located as shown in Figure 2 and the profile is shown in Figure 3. The first cluster of homes has a population of 40 people and the second cluster, a population of 80 people. There are 200 people living in the 30 homes to be provided individual services. These are the only services to be provided.

The transmission line from source to storage is sized as shown in Worksheet A.

First, present and future needs are estimated. Then a flow rate is determined by assuming a pumping time, a pipe size is selected as shown in item 5 on Worksheet A, and the head loss is found as shown in item 6. This will be used later to size a pump. The pipe size needed is 80mm for a flow of 1.9 l/sec.

Next, the size of the transmission line from the storage tank to the point of use is determined. This pipe must be sized, see Table 2, based on the water demand at any point in time rather than on a constant flow as would be found in the line from source to storage. The step by step design is shown in Worksheet B and includes:

1. Estimating the peak flow considering the present population.

2. Estimating future demand. This should be based on reasonable expectations which will vary from area to area.

3. Sizing the transmission line based on limiting the flow in the pipe to 0.75 liters/second. Flows of up to 1.5 liters/second can be used when elevation is not a major requirement.

Worksheet A. Designing Water Transmission Lines from Source to Storage

1. Estimated present water needs in liters

	Number of		Unit use		total
Population	Persons	320	x 50	=	16000
School	Students	____	x ____	=	____
Church	Attendees	____	x ____	=	____
Commercial		____	x ____	=	____
Large animals (cows)		____	x ____	=	____
Small animals (sheep)		____	x ____	=	____
Public watering fountains		____	x ____	=	____

Total present water needs = 16,000

2. Estimated future water use:
Use a 20 year design life. If no better inforamtion is available, use a population growth of 2 times the present population and an increase in animals of 1.25 times the present number. In addition assume an increase in the rate of water use of 2 times the current amount.

Population Present use 1600 x 4 = 84,000 liters

Institutions & public fountains Present use ____ x 2 = ____ liters

Animals Present use ____ x 1.25 = ____ liters

Total future water use = 84,000 l/day

3. Storage reservoir:
Use the future use and convert to m^3

Reservoir = $\frac{84,000}{1000}$ liters = 84 m^3

4. Pump production requirements:
Determine the estimated pumping rate in liters/second (l/s). If a pumping time is not given, use 12 hours.

Q l/s = Total daily demand = $\frac{84,000}{43200 \text{ sec.}}$ liters = 1.94 l/sec

5. Determine pipe size from pump to storage:

Pipe diameter d = 1.3 $\sqrt{Q\ m^3}$ per second
= 1.3 $\sqrt{.00194}$ l/sec = .056 m

Convert meters to mm 1000 x .056 m = 56 mm

Round mm calculated to available pipe size d = 80 mm

(Note: this method of pipe sizing is based on limiting the velocity of water in the pipe to 0.75m/sec)

6. System head:
To calculate the head losses through the pipe selected, add the losses due to fittings to friction losses. Add these to find the total dynamic head (TDH). Use Table 2 and determine friction losses.

TDH = static head + friction losses

a. Determine head required to overcome friction. Equivalent length of pipe due to fittings (Table 2).

Fitting	No.	x	Equivalent Length		
Gate valve	____	x	____	=	____m
Elbow, 90°	____	x	____	=	____m
Elbow, 45°	____	x	____	=	____m
Tee (straight through)	____	x	____	=	____m
Tee (through side)	____	x	____	=	____m
Swing check valve	____	x	____	=	____m

Total equivalent length ____m

Length of pipe from pump to storage = 4,000 m

Total pipe length = 4,000 m

Friction loss = $\frac{4000}{1000}$ m x 3.5 head loss per 1000/m = 14 m

b. Determine static head
Static head = elevation at top of storage - pump elevation
= 100 m - 150* m = 50 m

TDH = a+b = friction loss + static head = 14 + 50 = 64 m

*Assume tank 10m high

Worksheet B. Designing Water Transmission Line from Storage to Distribution

1. Design Flow - Present
   Line C to D

   Peak demand from homes with individual services

   No. of homes served 30

Range	Actual	x Demand in liters/second	Total
First	1	x 0.23	.023
2 to 10	9	x 0.08	.72
11 to 20	10	x 0.06	.60
21 to 30	10	x 0.06	.60
31 to 50	____	x 0.05	____

Total 2.15

   Peak demand from public watering fountains

Number of faucets		Demand per faucet in liters/second	Total
1 to 6	3	x 0.23	0.69
7 to 9	____	x 0.19	____
10 to 12	____	x 0.17	____

Total 0.69

   Peak demand from other points of use

Facility	Number of fixtures		Demand in liters/second	Total
Schools	____	x	0.23	____
Religious	____	x	0.23	____
Commerical	____	x	0.23	____
Industrial*	____	x	varies	____
Fire*	____	x	varies	____
Animal*	____	x	varies	____

Total 0

*Normally not included in rural system.

Total peak demand 2.84 l/sec.

2. Estimated water use - Future
   Use a 20 year design life. If no better information is available, use a population growth of 2 times the present population and an increase in animals of 1.25 times the present number.

   Population Present use 2.84 x 2 = 5.78 l/sec.

   Institutions & public fountains Present use ____ x 2 = ____ l/sec.

   Animals Present use ____ x 1.25 = ____ l/sec.

   Total future water use = 5.78 l/sec.

3. Determine transmission line diameter for each section of pipe being considered and tabulate in section 5. Table 3 solves this formula for a range of flows.

   Line C to D

   Pipe diameter d = 1.3/Q m^3 per second
   = 1.3/.00___ l/sec. = ____ m

   Convert meters to mm 1000 x ____ m = ____ mm

   Round mm calculated to available pipe size d = 100 mm

(Note: This method of pipe sizing is based on limiting the velocity of water in the pipe to 0.75m/sec)

4. Head requirements:
   To calculate the head required, first find the total dynamic head (TDH). Use Table 2 to determine friction losses. Do this for each section of pipe being considered.

Worksheet B. Designing Water Transmission Line from Storage to Distribution (continued)

TDH = static head + friction losses

Friction Losses

a. Detemine head require to overcome friction.
Equivalent length of pipe due to fittings* (Table 2)

Fitting	No.	x	Equivalent length		
Gate valve	____	x	____	=	____m
Elbow, 90°	____	x	____	=	____m
Elbow, 45°	____	x	____	=	____m
Tee (straight through)	____	x	____	=	____m
Tee (through side)	____	x	____	=	____m
Swing check valve	____	x	____	=	____m

Total equivalent length ____m

92%

b. Length of pipe from C to D = 1000 m

c. Total pipe length = a + b = 100 m

Friction loss = $\frac{1000}{1000}$ m x 7 head loss pe 1000/m = 7 m

*Note: When pipelines exceed 500m, these losses are relatively small and can usually be ignored.

5. Tabulate results of first 4 steps for each length and branch.

Line	1 & 2 Flow l/sec	3 Pipe Size	4c Length m (x 1000)	4d Head loss 1000m (HL)	Elevation difference (EL)	Total required (HL-EL)
Branch 1						
C to D	6	100	1	7	-35	
____ to ____						
____ to ____						
____ to ____						
____ to ____						
Branch Total ---				7	-35	-28m
Branch ____						
____ to ____						
____ to ____						
____ to ____						
____ to ____						
____ to ____						
Branch Total ---						
Branch ____						
____ to ____						
____ to ____						
____ to ____						
____ to ____						
____ to ____						
Branch Total						
Branch ____						
____ to ____						
____ to ____						
____ to ____						
____ to ____						
____ to ____						
Banch Total						
Branch ____						
____ to ____						
____ to ____						
____ to ____						
____ to ____						
____ to ____						
Branch Total						

Table 1. Peak Flows for Single Hydrant and Full Facilities in Liters Per Second

Number of homes	Single Hydrant	Full Facilities	Number of homes	Single Hydrant	Full Facilities
1	0.23	1.0	91-100	.03	.12
2-10	0.08	.32	101-125	.03	.11
11-20	0.06	0.25	126-150	0.03	0.10
21-30	0.06	0.24	151-175	0.02	0.09
31-40	0.05	0.21	176-200	0.02	0.08
41-50	0.05	0.20	201-300	0.02	0.07
51-60	0.05	0.19	301-400	0.02	0.06
61-70	0.04	0.16	401-500	0.01	0.05
71-80	0.04	0.14	501-750	0.01	0.04
81-90	0.03	0.13	751-1000	0.01	0.03

Table 2. Pipe Sizes Based on Limiting Velocities in the Pipe to 0.75 and 1.5 meters/second

Range of Flow (1/sec)	Pipe Sized Based a Velocity of 0.75 m/sec*	Range of Flow (1/sec)	Pipe Size Based on Velocity of 1.5 m/sec*
0.1-0.6	30mm	0.1-1.3	30mm
0.7-1.0	40mm	1.4-2.2	40mm
1.0-1.5	50mm	2.3-3.5	50mm
1.6-3.9	80mm	3.6-8.9	80mm
4.0-6.0	100mm	9.0-13.8	100mm
6.1-14.0	150mm	13.9-31.0	150mm

*Formula for determining pipe size:

Flow of 0.75 m/sec. Diameter = 1.3/Q
Flow of 1.5 m/sec. Diameter = 0.85/Q

Table 3. Friction Losses in Fittings Equivalent Length of Straight Pipe, Meters

Size mm	30	40	50	80	100
Gate valve-open	0.4	0.4	0.5	0.6	0.8
Elbow, 90°	2.0	2.3	2.6	3.4	4.0
Elbow, 45°	0.5	0.7	0.9	1.2	1.7
Tee (straight)	1.4	1.7	2.4	3.7	5.2
Tee (through side)	2.7	3.0	3.7	5.2	6.4
Check valve	4.0	4.6	5.8	8.3	11.6

4. Determining head losses from these flows. This must be done so that the elevation of the storage tank can be calculated or checked.

5. Tabulating and comparing head losses. See Table 3.

Other Design Considerations

Considerations other than pipe size must be taken into account when designing a transmission line. These include high and low points along the line and valving to facilitate operation and maintenance. Even when a positive pressure is maintained by providing for a residual head, it is possible for air to collect at high points in a line. A combination vacuum and air release valve should therefore be installed at the top of each rise as shown in Figures 5 and 6. Low points in the line should be equipped with a drain valve so that any sediment that collects can be flushed out. This is very important if the source contains sand or fine sediment.

Gate valves, shown in Figure 7, should be placed in the line to permit system operation and repair. In a piped distribution network, valves are located so that portions of the system remain in operaton when other parts are shut down. See Figure 8. With a simple gravity flow system, a failure anywhere in the line will put the entire system out of operation so a large number of valves are not needed. One valve should be placed at the source and a second near the storage tank or point of use. Additional valves located at intervals of 1000m may be desirable for quicker access to turn the system off should a break occur or to isolate portions of the line or testing purposes.

Occasionally, the terrain is so steep that the water pressure would be too great for the pipe. In this case, pressure reducing valves may be required at appropriate locations. An alternative is to provide water storage tanks at the appropriate locations to relieve the pressure.

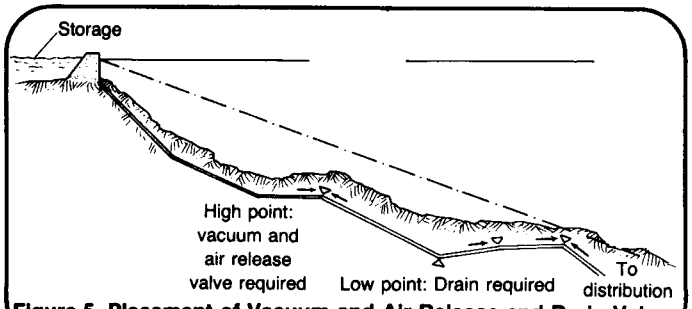

Figure 5. Placement of Vacuum and Air Release and Drain Valves

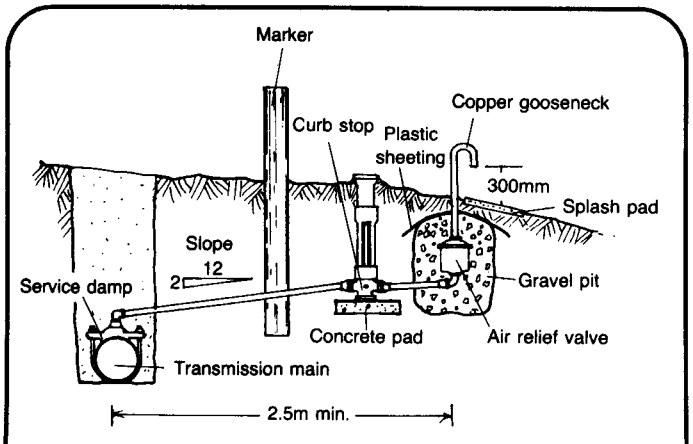

Figure 6. Typical Installation of Vacuum and Air Release Valves

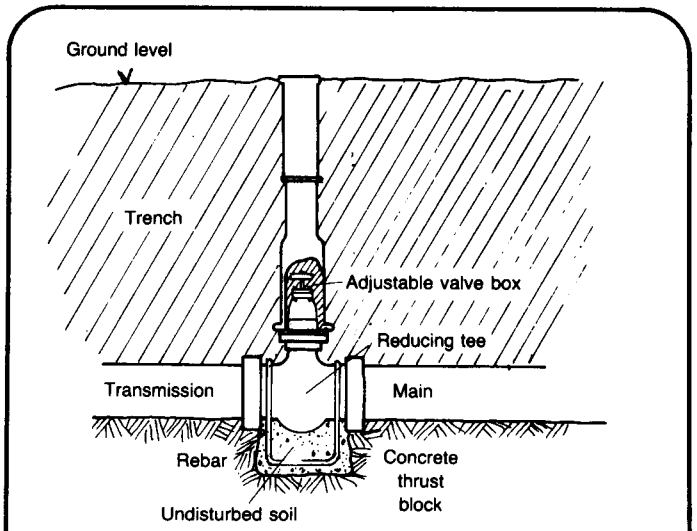

Figure 7. Typical Installation of Gate Valve

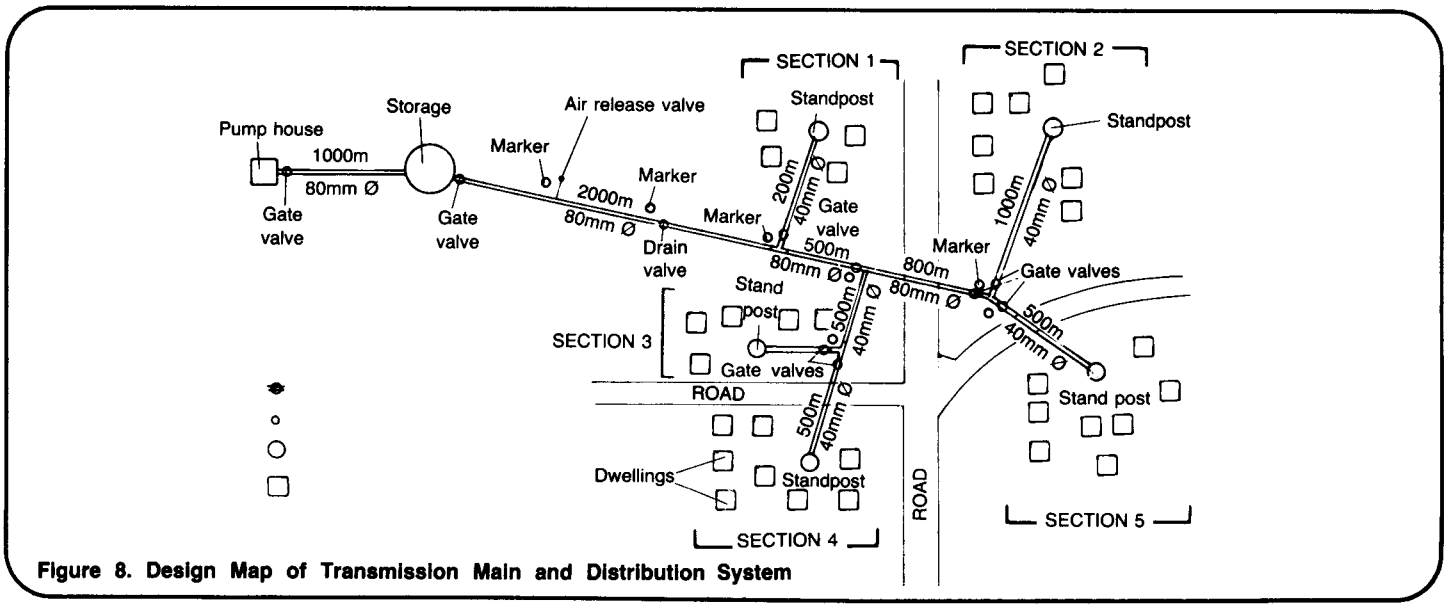

Figure 8. Design Map of Transmission Main and Distribution System

Technical Notes are part of a set of "Water for the World" materials produced under contract to the U.S. Agency for International Development by National Demonstration Water Project, Institute for Rural Water, and National Environmental Health Association. Artwork was done by Redwing Art Service. Technical Notes are intended to provide assistance to a broad range of people with field responsibility for village water supply and sanitation projects in the developing nations. For more detail on the purpose, organization and suggestions for use of Technical Notes, see the introductory Note in the series, titled "Using 'Water for the World' Technical Notes." Other parts of the "Water for the World" series include a comprehensive Program Manual and several Policy Perspectives. Further information on these materials may be obtained from the Development Information Center, Agency for International Development, Washington, D.C., 20523, U.S.A.

1982