# Water for the World

## Constructing a Sedimentation Basin

Technical Note No. RWS. 3.C.2

A sedimentation basin provides an effective way to remove turbidity from water before it reaches the users. In some cases, sedimentation basins are the only water treatment system through which water passes and the basin is used both for treatment and storage. Or, a sedimentation basin can provide pre-treatment of water before it enters a slow sand filter. The design and construction of a sedimentation basin should take into account its ultimate use.

This technical note discusses the steps to follow in constructing a plain sedimentation basin. Follow all steps carefully. Construction follows general rules for rectangular tank construction. Whenever possible, an engineer or someone skilled in masonry or reinforced concrete tank construction should be available to participate in the construction process. For smaller systems, 10m diameter circular tanks made from ferrocement can be constructed. For information on constructing tanks using ferrocement, see "Constructing a Ground Level Storage Tank," RWS.5.C.2.

### Useful Definitions

CUT-OFF VALVE - Any valve (for example, a gate valve) which is used to shut off the flow of water from one point to another.

FERROCEMENT - An economical and simple-to-use type of reinforced concrete made of wire mesh, sand, water and cement.

MASONRY - Brick or stone work used in construction.

MASS CONCRETE - Concrete that is not reinforced.

WEIR - A barrier placed in moving water to either measure, stop or control flow.

### Materials Needed

Before construction begins, the project designer should give you the following items:

1. A map of the area that includes the sedimentation basin, the water sources, other treatment systems planned, and the distribution system. Any major landmarks should also be included on the map. See Figure 1.

2. A list of all labor, materials and tools needed as shown in Table 1. Ensure that all needed materials are available and at the work site before construction begins. To avoid delays, make sure that adequate quantities of material are available.

3. A plan of the sedimentation basin with all dimensions as shown in Figure 2. The design drawing should either show a basin with sloping walls dug into the ground or a rectangular structure with vertical walls. Construction of both types of basins is described in this technical note.

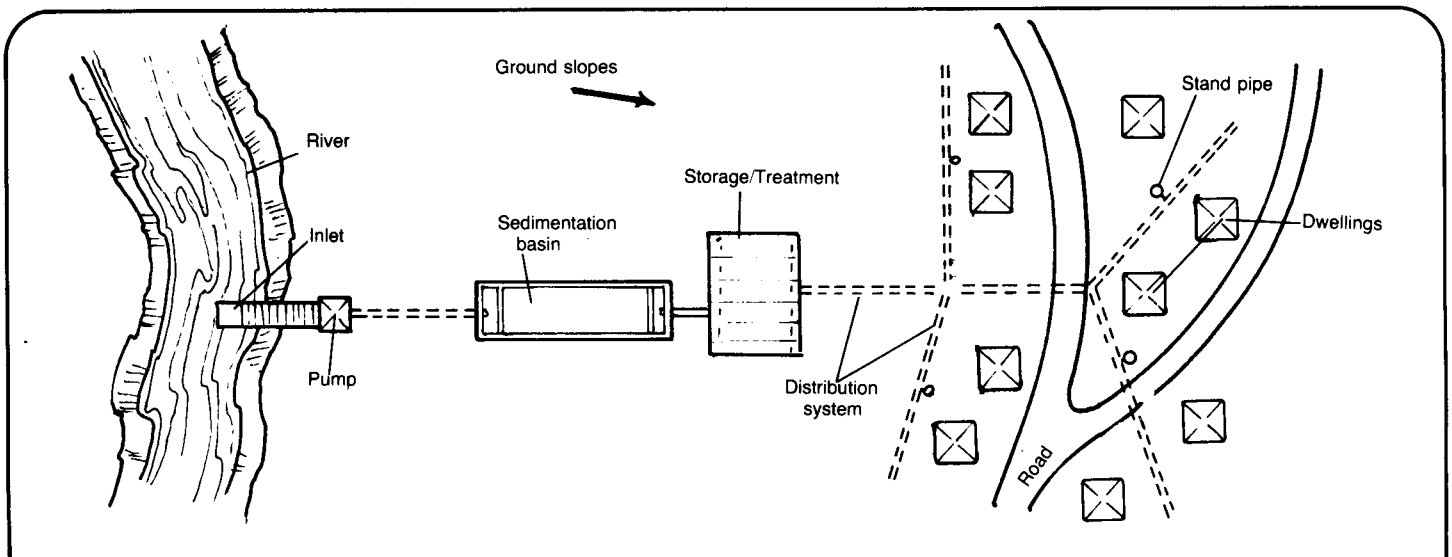


**Figure 1. Location Map**

**Table 1. Sample Materials List for a Plain Sedimentation Basin**

| Item | Description | Quantity | Estimated Cost |
|---|---|---|---|
| Labor | Foreman | ____ | ____ |
| | Laborers | ____ | ____ |
| Supplies | Bricks | ____ | ____ |
| | Cement | ____ | ____ |
| | Clean sand | ____ | ____ |
| | Water | ____ | ____ |
| | Material for weir | ____ | ____ |
| | PVC pipe | ____ | ____ |
| | Rope | ____ | ____ |
| | Stakes | ____ | ____ |
| Tools | Digging tools | ____ | ____ |
| | Trowels | ____ | ____ |
| | Wheelbarrow | ____ | ____ |
| | Saw | ____ | ____ |
| | Mortar box | ____ | ____ |
| | Hammer | ____ | ____ |
| | Nails | ____ | ____ |
| | Plumb bob | ____ | ____ |
| | Measuring tape | ____ | ____ |
| | Buckets | ____ | ____ |

Total Estimated Cost = ____

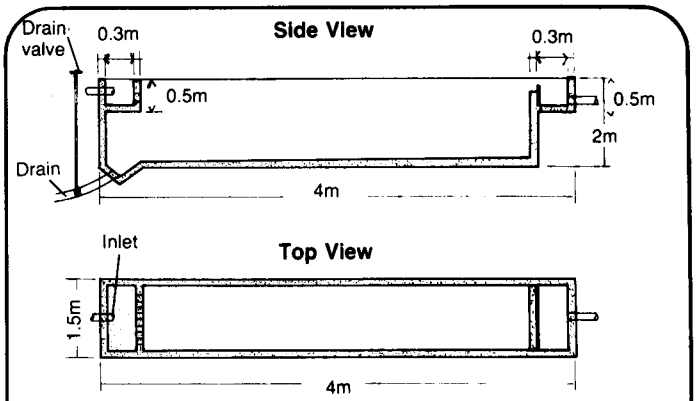


**Figure 2. Sedimentation Basin**

## General Construction Steps

Follow the construction steps below. Refer to all diagrams and follow all directions carefully before attempting to build the sedimentation basin.

1. Locate the site designated for the sedimentation basin. Mark out the dimensions on the ground using a tape measure, string, stakes and a hand level with sighting slope on a pole, or a surveyor's level and a tripod. See Figure 3. If a sloping wall structure

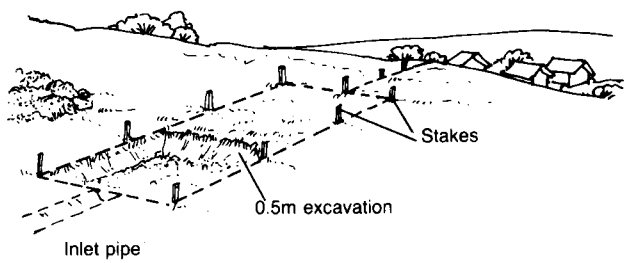


**Figure 3. Stakes Marking Site of Sedimentation Basin**

is to be built, the basin will be larger. Generally, walls should slope at a 1:2 ratio (1m slope for every 2m height). This slope increases the length of the basin so more ground area is needed for the structure.

2. After the area is completely marked, begin the excavation. If construction is for a vertical wall tank, excavation of the foundation is necessary. Dig down a minimum of 0.3m for the foundation. A deeper foundation will provide greater support for the walls because the outside soil pressure offsets the pressure from within the tank. When choosing a deep foundation, remember that the distance from ground level to the top of the tank should be at least 0.5m to prevent children, animals or debris from getting into the tank. A height of between 0.5-1.0m is best. For example, for a basin 2m in height, the height along ground level would be 1m and the foundation would be 1m deep.

After reaching the desired depth, level the floor of the tank for the foundation. After leveling, slope the bottom downward toward the inlet side at least three percent and not more than five percent to provide for drainage.

When excavating sloping wall structures, it is necessary to dig down to the entire depth of the structure, or 2m in the example. After digging down about 1m, begin to slope the walls. In this way cave-ins are prevented. After reaching floor depth, level the floor and provide a slope for drainage as described for vertical wall structures. Then use stakes and string to mark out the slope of the walls.

## Foundations and Walls

For very large tanks, reinforced concrete foundations and walls should be used. The type and quantity of reinforcing rod depends on local conditions and availability of materials. Always consult an engineer before constructing a reinforced concrete tank. An engineer or skilled craftsman should always be on site to ensure proper construction. Foundations and walls for small- and medium-sized rectangular sedimentation basins can be constructed of mass concrete or masonry. When using these materials, construct a raft foundation as shown in Figure 4. This type of foundation is not difficult to construct and prevents loss of water through the joint between the wall and the foundation. When mass cement or masonry are used, the difference between the inside and outside pressures should not be very great. Therefore, the tanks should be built into the ground. For safety and strength, make the walls between 0.2-0.3m thick.

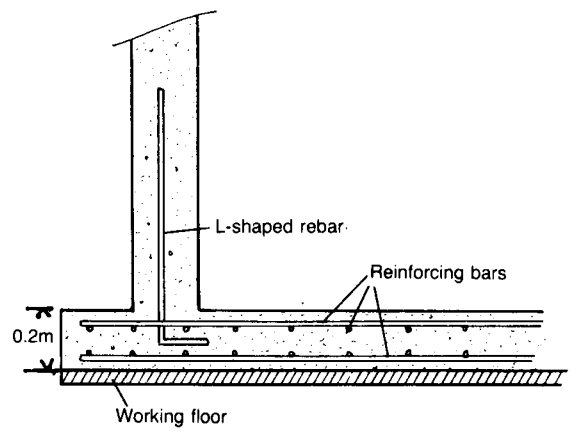


**Figure 4. Raft Foundation for Vertical Walls**

Prepare wooden forms for the foundation and walls. Walls should be about 0.25m in width. Oil the forms before pouring the cement. When setting the forms for the foundation, place 8mm steel rods near the bottom and top of the form as shown in Figure 5. The steel rods should be placed at least 200mm apart. The reinforcing bars should be placed in both directions to form a grid pattern and bars should be tied together where they cross.

When setting up the forms, be sure to prepare a place for sludge catchment and install a pipe for drainage. A 30-50mm pipe is appropriate for this purpose. Place the drainage pipe toward the inlet side of the basin. The catchment should be carved into the floor to a depth of about 0.2m.

Forms must be prepared for the inlet and outlet structures. Refer to Figure 6 for an indication of the type of forms needed.

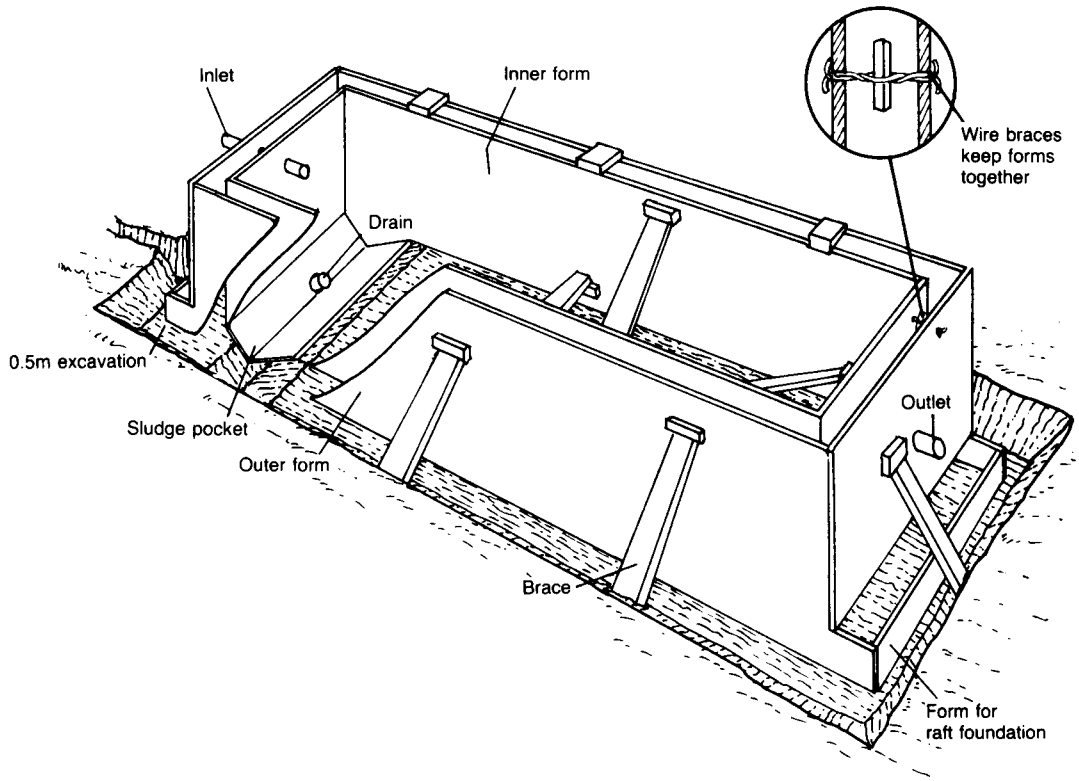


**Figure 5. Forms for Vertical Walls**

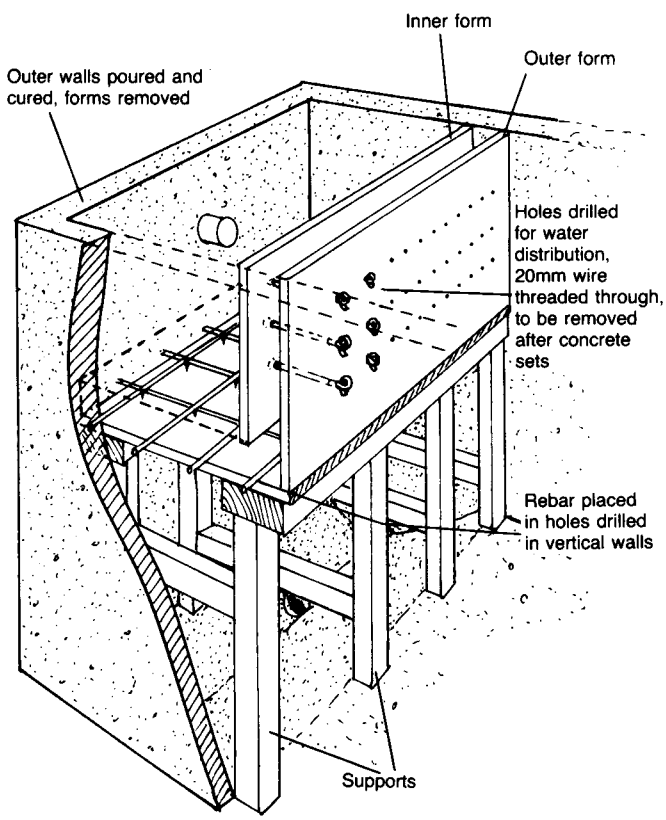


**Figure 6. Forms for Inlet Section**

Once the forms are set and the structure is completely level, mix the concrete in the following proportion: one part cement to two parts sand to three parts gravel (1:2:3). Try to mix as much concrete in each batch as possible, so that a large amount can be poured at one time. Use a hand or mechanical mixer if available. Once poured, allow the concrete to cure for at least 10 days to two weeks.

For brick sedimentation basins, use workers with good experience in laying brick. Special care must be taken to ensure that the structure is water-tight. Masonry tanks, like concrete tanks, should have a foundation of concrete for added strength. To form a good foundation, dig a trench at least 0.6m wide and 0.3m deep. Level the bottom and pour a layer of concrete 0.2m thick. Then begin to lay the bricks for the walls. These walls should be at least 0.3m thick. When laying brick, be sure that vertical joints do not line up. Use a mixture of one part cement and three or four parts sand for the mortar.

When building the inlet and outlet walls, set up the wooden form work as shown in Figure 6. After the entire structure is complete, plaster the inside walls and the floor with two coats of mortar, each 10mm thick. Again, use a mixture of one part cement to three parts sand for the mix. Add just enough water to get a good paste.

A well-constructed intake is important for the efficient operation of the sedimentation basin because it provides for even water flow into the basin. Figure 7 shows an intake structure for a sedimentation basin. To build this type of structure follow these steps:

1. Prepare the forms for the inlet. The bottom of the inlet channel should be located approximately 0.5-0.7m below the top of the tank. The inlet should extend across the entire width of the tank and 0.5m from the end wall. Brace the forms well. Before pouring the concrete, drill an inlet hole and put the pipe in place. The pipe should be located halfway between the bottom of the inlet channel and the top of the tank. Place the overflow pipe at the top of the inlet.

2. Drill 45 holes, 20mm in diameter and 20mm apart, in the wooden forms as shown in Figure 7. Place wooden plugs in the holes. These plugs can be removed after the cement dries.

3. If bricks are used for building the inlet, simply leave bricks or half bricks out of the wall at even intervals so that water flows through evenly.

The outlet is also very important for regulating the water flow in the basin. The outlet structure has a weir and an outlet channel as shown in Figure 8.

1. Use the wall of the tank as the weir. To provide for even flow over the wall, either round the edges or bolt on a V-notched weir. The notches can be cut into a metal strip. Each is cut to form 90° angles and separated by a distance of 150mm. Install the V-notch by bolting it to the wall.

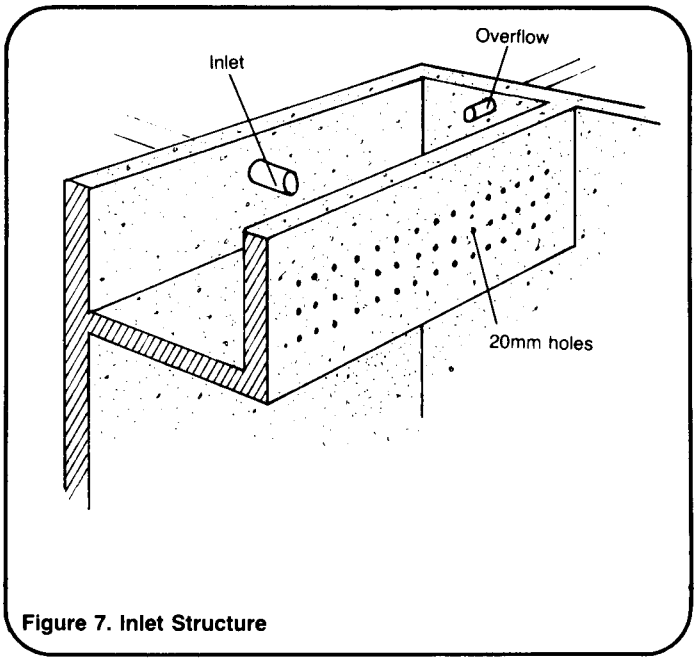

**Figure 7. Inlet Structure**

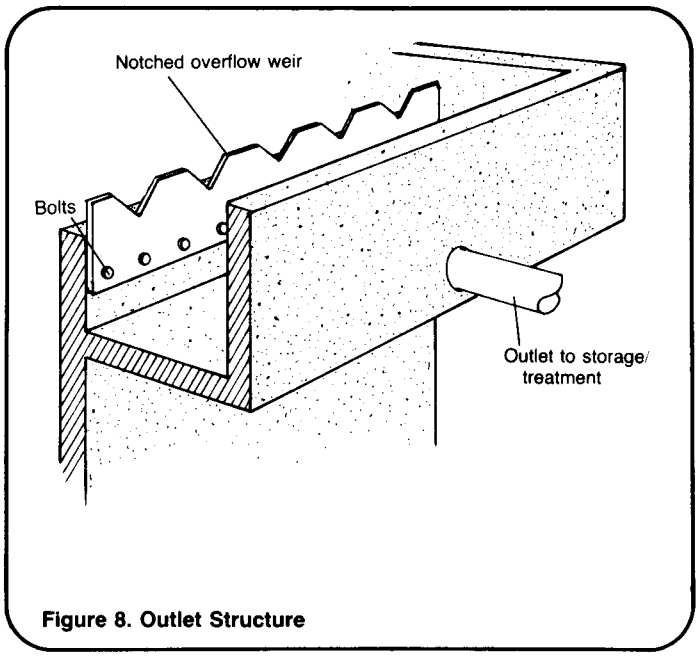

**Figure 8. Outlet Structure**

2. Prepare forms to build the outlet channel. The outlet channel should follow the same design and construction as the inlet channel. Instead of holes placed in the vertical wall, put the outlet pipe in place and seal around its edges with mortar to prevent leakage. Remember when building the forms to place a pipe in them so that an outlet hole is left in the walls. Connect the outlet pipe to a pipe that either goes to users or to further treatment. Generally, water should

pass to a slow sand filter after sedimentation. Place a cut-off valve between the sedimentation basin and the next part of the system to control water flow from the basin. Figure 9 shows a model of a completed sedimentation basin. It represents only one design. Other designs may be chosen as long as the basin provides for low turbulence and an overflow of water throughout the basin.

## Summary

A sedimentation basin can be constructed locally. Various materials can be used in the construction process. For small to medium tanks, mass concrete or masonry is preferred. They require little skilled labor and materials are generally available. Reinforced concrete is used for larger tanks. The use of reinforced concrete requires more skilled laborers than are needed for either masonry or mass concrete basins. Further, the cost of materials is much higher.

Generally, after sedimentation water goes on to further treatment by slow sand filtration. For information on the design and construction of slow sand filters, see "Designing a Slow Sand Filter," RWS.3.D.3 and "Constructing a Slow Sand Filter," RWS.3.C.3.

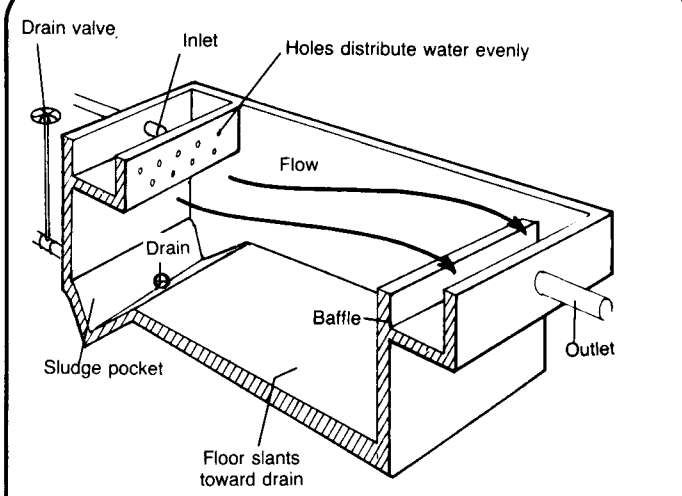


**Figure 9. Completed Sedimentation Basin**