Water for the World

Designing a Small Community Sedimentation Basin

Technical Note No. RWS. 3.D.2

Sedimentation is the removal of suspended matter from water through a process of settling. In the process, particles heavier than water settle to the bottom of an especially designed tank.

Sedimentation is a very important process. Particles which enter a water supply through erosion and run-off can be harmful to water distribution and treatment systems. Suspended particles can block pipes, clog filter screens and filter beds, reduce storage tank capacity and affect water quality since pathogens may be trapped in the particles. These particles must be removed or receive further treatment before water can be consumed. Further treatment may be needed to remove fine clay and colloidal matter which have a very slow settling rate and are difficult to remove by plain sedimentation.

This technical note describes the design of a plain sedimentation basin for a rural water supply system. This type of basin should be used where water contains much suspended matter. The basin can be used alone or as a pre-treatment step for a slow sand filter. See "Designing a Slow Sand Filter," RWS.3.D.3. No chemicals or mechanical parts are used with a plain sedimentation basin and maintenance is relatively easy. Sedimentation basins can serve as storage tanks as well as water treatment units.

Useful Definitions

BAFFLE - A wall or other device which holds back or turns aside water flow.

COLLOIDAL MATERIAL - Substances made up of small particles that remain in suspension in water.

FREEBOARD - The height of the sedimentation basin above the water level; it prevents water from overflowing and reduces disturbance by winds.

PERIOD OF DETENTION - The amount of time water is held in a sedimentation basin.

RAW WATER - Untreated water that is to pass through a treatment system.

REINFORCED CONCRETE - Concrete containing steel reinforcing rods for extra strength.

RESERVOIR - A natural or man-made facility to store water.

SETTLING VELOCITY - The rate at which particles settle in still or slowly flowing water.

SHORT-CIRCUITING - The passage of water from a sedimentation basin inlet to an outlet without ample time for sedimentation to occur; the use of straight inlets and outlets cause this to happen.

WEIR - A barrier placed in moving water to stop, control or measure water flow.

The design process should result in the following three items which should be given to the construction supervisor:

1. A map of the area marked with the location of the water supply, the proposed sedimentation basin and other treatment units that may be included. The map must show major landmarks and distances. Figure 1 shows a sample location map.

2. A list of all labor and materials needed for the project similar to Table 1.

3. A detailed plan of the sedimentation basin showing all dimensions as shown in Figure 2.

Table 1. Sample Materials List for a Plain Sedimentation Basin

Item	Description	Quantity	Estimated Cost
Labor	Foreman	____	____
	Laborers	____	____
Supplies	Bricks	____	____
	Cement	____	____
	Clean sand	____	____
	Water	____	____
	Material for weir	____	____
	PVC pipe	____	____
	Rope	____	____
	Stakes	____	____
Tools	Digging tools	____	____
	Trowels	____	____
	Wheelbarrow	____	____
	Saw	____	____
	Mortar box	____	____
	Hammer	____	____
	Nails	____	____
	Plumb line	____	____
	Measuring tape	____	____
	String	____	____
	Buckets	____	____

Total Estimated Cost = ____

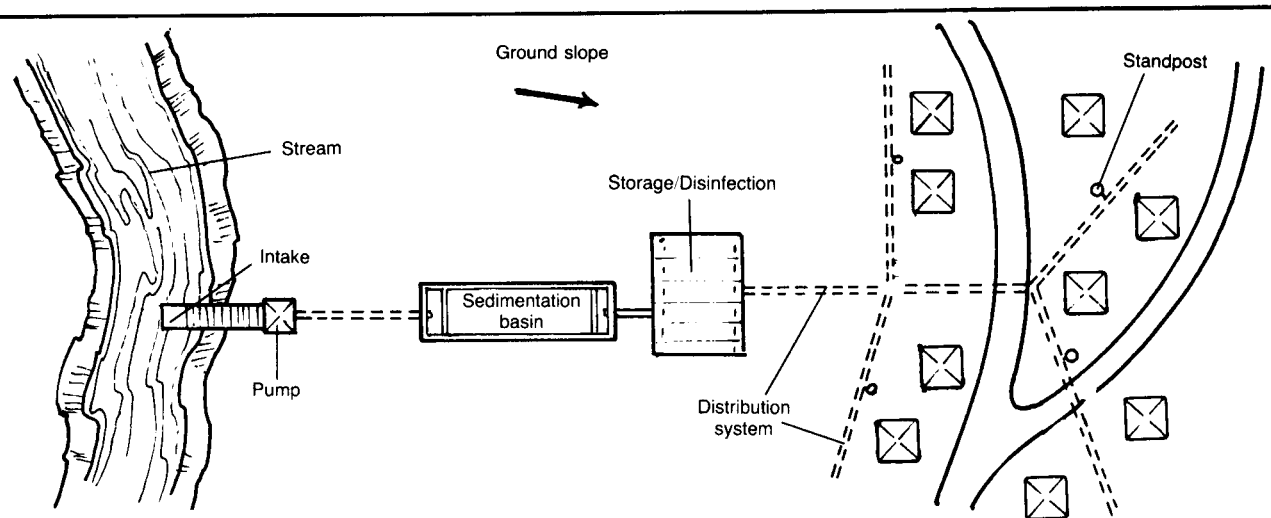

Figure 1. Location Map

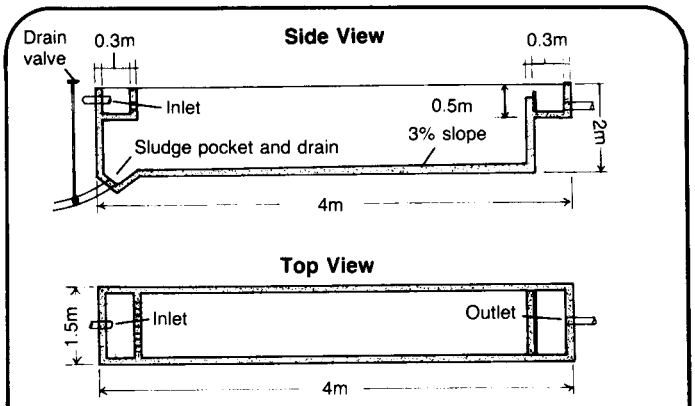

Figure 2. Sedimentation Basin

In order to design an effective sedimentation basin, it is necessary to know the nature and characteristics of the suspended matter in the water, determine the dimensions for the sedimentation basin, and choose the design that best meets local needs. Sedimentation basins are rectangular for easier construction and manufacture and are generally made of masonry, plain concrete or reinforced concrete. They usually do not need covers unless there is a major problem with mosquito breeding.

Raw water, especially river water, may contain many different types of impurities. There may be large particles which can be strained out of the water or which settle out naturally in still or slow moving water because of the force of gravity. These particles are removed by the sedimentation process. Reservoirs, ponds and lakes act as natural sedimentation basins. Tanks are built to provide sedimentation for water from rivers and streams. Water may also contain small microscopic or colloidal particles which do not settle well and can be removed only with chemical coagulation, usually followed by filtration. Finally, there may be material dissolved in water that can only be removed by chemical treatment.

Table 2 gives the sedimentation rates for several types of material. The table provides only a guide for settling rates. Exact determination of settling rates involves complicated calculations and should be done by an engineer.

Table 2. Sedimentation Rates

Material	Partical Diameter (millimeters)	Settling Velocity (meters per hour)
Coarse sand	1.0mm 0.5mm	365m/h 194m/h
Fine sand	0.25mm 0.10mm	97.5m/h 29.0m/h
Silt	0.5mm 0.005mm	10.6m/h 0.14m/h
Fine clay	0.001mm 0.0001mm	0.005m/h (5mm/h) 0.00005m/h (0.005mm/h)

Basic Design Features

Sedimentation basins are designed to reduce the velocity of water entering the tank so that it is retained long enough to permit particles to settle. A sedimentation basin has four sections: the inlet zone, the settling zone, the outlet zone, and the sludge deposit zone. See Figure 3.

The inlet zone is the area where water enters the tank and is distributed evenly throughout its entire area. A baffle or wall separates the inlet zone from the settling zone. The work of the sedimentation basin is done in the settling zone, where the water is held long enough to permit suspended particles to settle.

In the outlet zone, clarified water is collected from the top layer of the basin. This area is separated from the settling zone by a weir which controls water flow out of the basin. Water from the settling basin flows over the weir into the outlet zone.

Finally, the sludge zone collects the material settled from the water. The floor in the sludge zone should have a minimum of 3 percent slope toward the drain.

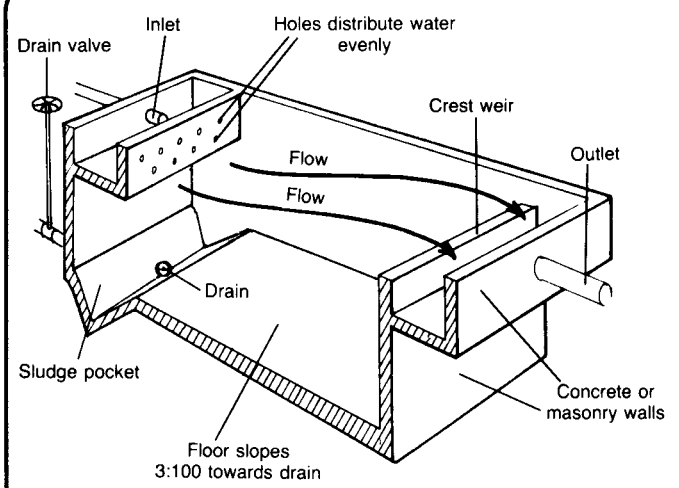

Figure 3. Sedimentation Basin

Dimensions. The first step in determining the proper dimensions of the sedimentation basin is calculating the capacity of the tank. Determine the capacity by the following formula:

$$\text{Flow rate } (m^3/h) = \frac{\text{User population} \times \text{liters/capita/day} \times \text{maximum daily demand}}{1000 \text{ liters}/m^3}$$

For example, assume a population of 1200, average demand of 40 liters/capita/day, and maximum daily demand of 1.2 times the average demand.

$$\text{Flow rate} = 1200 \times \frac{40 \text{ liters}}{1000 \text{ liters}/m^3} \times 1.2$$

$$\text{Flow rate} = 1200 \times .04m^3 \times 1.2$$

$$\text{Flow rate} = 57.6m^3/\text{day}$$

$57.6m^3/\text{day} \div 24$ hours per day = $2.5m^3/\text{hour}$.

Next, determine the settling velocity of the material. For plain sedimentation, the settling velocity should be in the range of 0.1-1m/hour. For the example above, assume a settling velocity of 0.6m/hour which is the settling velocity of silt grain with a diameter of 0.01mm. All particles with a settling velocity higher than 0.6m/hour and some particles that settle slower will be removed.

Determine the size of the tank by using the settling velocity rate of 0.6m/hour and the following formula:

$$\text{Surface area (length x width of basin)} = \frac{\text{flow rate}}{\text{settling velocity}}$$

$$\text{Area } (m^2) = \frac{2.5m^3/\text{hour}}{0.6m/\text{hour}}$$

$$\text{Area } m^2 = 4.2m^2$$

The minimum area of the tank should be $4.2m^2$. A somewhat larger tank can be constructed for more capacity, longer detention time and to allow for population growth. In this case, a tank with a $6m^2$ area would be appropriate.

To determine the length and width of the tank, keep the following guideline in mind. The ratio between the length and width of the tank should range between two and six. In other words, if you divide the length of the tank by the width, the result will be between two and six. Good design dimensions for the tank would be a length of 4m and a width of 1.5m. This gives an area of $6m^2$ and a ratio of 2.7 between length and width ($\frac{6m}{1.5m} = 2.7m$).

The efficiency of the settling process is reduced if there is turbulence or short-circuiting in the tank. This is prevented by ensuring that the correct ratio of length to width exists and by taking other measures. The measures that prevent short-circuiting are the provision of adequate tank depth and a well-designed inlet and outlet. The tank should be between 2-2.5m deep. Because wind may disturb settling, place the inlets and outlets at least 0.5m below the tank edge. This provides a protective freeboard to reduce wind disturbance.

Check the capacity of the tank by finding the volume and determining the retention time of water in the tank. The tank should retain water for at least four hours. Generally, a retention time of between four and six hours is sufficient.

Determine the retention time by first calculating the volume of the tank. The volume of the tank is equal to the length times the width times the height.

$$\text{volume} = \text{length x width x height}$$

$$\text{volume} = 4m \times 1.5m \times 2m$$

$$\text{volume} = 12m^3$$

The retention time is calculated by dividing the volume by the rate of flow of the water in the tank.

$$\text{Retention time} = \frac{\text{volume of the tank}}{\text{flow rate}}$$

$$\text{Retention time} = \frac{12m^3}{2.5m^3/\text{hour}}$$

$$\text{Retention time} = 4.8 \text{ hours}$$

Water is retained for 4.8 hours in the settling tank. This should be sufficient to allow settling to occur.

Wall Structure. Two types of wall structure designs can be chosen for a sedimentation basin. There are sloping walls and vertical walls.

Sloping wall structures are dug into the ground and the walls are lined with masonry, rip-rap, sand-cement or mortar to protect them and to prevent leaking. A sloping wall structure is a good choice if money is limited and skilled labor is not available. Sloping walls should not be used where the ground-

water level is high. Vertical wall structures follow typical masonry or concrete storage tank design and should be designed by someone with construction experience. More detailed information on the construction of wall structures for sedimentation basins is available in "Constructing a Sedimentation Basin," RWS.3.C.2.

Inlet Structure. The settling basin must have a separate inlet structure to ensure an even distribution of the water in the tank. Figure 4 shows one simple design. The inlet structure should extend between 0.5-0.75m from the wall into the basin and across the entire basin width.

Separate the inlet from the settling zone with a wall. Place equally sized, 20mm holes in the wall at equal distances from each other. These holes should be placed in the vertical wall as shown in Figure 4. The velocity of flow into the inlet should be less than 1m per second. To get sufficient flow, a large number of holes are needed spread out across the width of the inlet. Make three rows and three columns of holes in the inlet wall. For the example given, the inlet consists of three rows of 15 holes each with each hole 20mm apart.

In the upper part of the inlet structure, there should be an overflow pipe. Place this pipe above the highest row of holes to prevent any flow over the inlet wall.

Outlet Structure. Place an outlet channel at the far end of the settling tank. The outlet consists of a weir made of wood, metal or concrete extending across the width of the basin. The simplest weir is formed by the top of the basin wall. To work effectively, the weir must be leveled very carefully. The top of the wall can be rounded or a V-notched strip added to ensure even flow on the wall. The outlet structure should form a trough with an outlet hole at the bottom. Make the trough sufficiently deep to avoid spillage. To provide for even flow into the trough, attach a metal strip for the weir crest as shown in Figure 5. Cut triangular sections at even intervals and bolt it to the concrete weir.

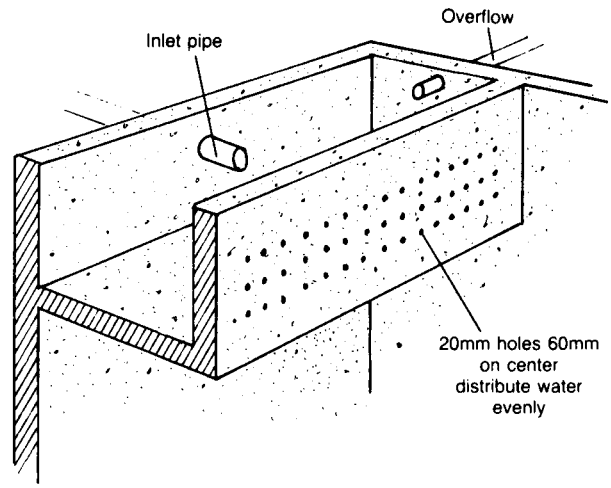

Figure 4. Inlet Structure

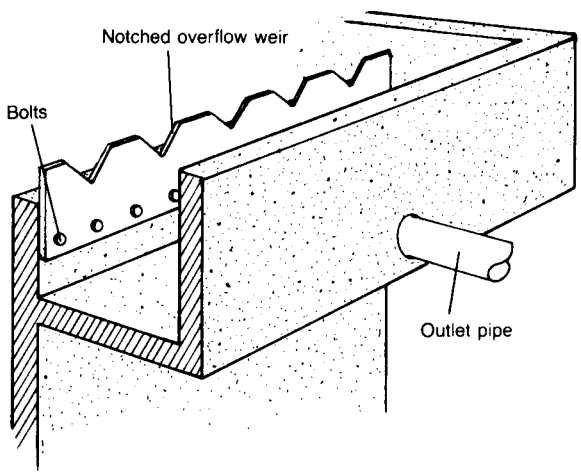

Figure 5. Outlet Structure

Finally, place a drain pipe at the bottom of the tank as shown in Figure 2. The pipe is necessary for draining the water out of the tank when cleaning it. For all pipes, including inlet, outlet, and drain pipes, 40-50mm polyvinyl chloride (PVC) pipe can be used.

The Basin. Sedimentation basins are rectangular structures made of either concrete or masonry. The use of reinforced concrete requires a higher level of skill and costs more money than masonry or plain concrete. Two designs generally used are an above-ground structure with vertical walls or an excavated structure with sloping walls.

A structure with vertical walls should have an excavated foundation of at least 0.3m. A deeper foundation is often preferred so that pressure on the inside and outside of the structure is equalized. Use a raft foundation as shown in Figure 6. The foundation should extend about 0.25m beyond the wall on each side. When determining the depth of the foundation, be sure to take into account that the distance from the ground level to the top of the tank should be at least 0.5m to prevent animals or young children from climbing or falling in. A tank height about 1.0m above ground level is best.

Once the basic design is set, the amount of materials needed should be determined. If bricks are used for construction, determine the dimensions of the tank and the amount of bricks and mortar needed by following the steps in Worksheet A. Add 10 percent for error. Generally, local builders know the number of bricks needed per cubic meter of construction. When using plain concrete, determine the amount of materials needed by doing the calculations shown in Worksheet A. Make all walls 0.2-0.3m thick.

If the excavated sloping wall structure is used, the tank will be completely in the ground. The slope of the walls should be approximately 1:2, 1m of slope for every 2m of height. This slope will increase the length of the tank by 2m, 1m on each end. Suitable lining materials are masonry, concrete, puddled clay and a sand/cement mixture with chicken wire reinforcing. Wall thickness will vary with material used. Make sand/cement and concrete walls 0.8m thick, impervious clay walls 0.05m thick, and brickwork 0.10m. Other design features are similar to basins with vertical walls.

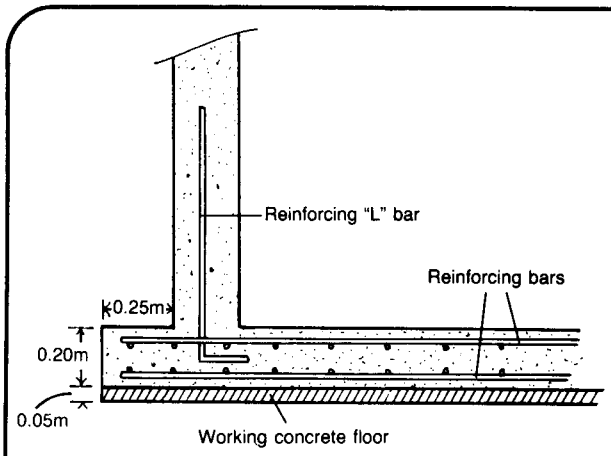

Figure 6. Raft Foundation for Vertical Walls

Summary

Sedimentation basins are designed so that turbid water flows through them at a low velocity and suspended particles settle out. For rural areas, rectangular masonry basins are the least expensive and simplest to install and the easiest to maintain. Tanks may also be made of reinforced concrete. Water that passes through a sedimentation basin loses suspended solids but generally must receive further treatment in a slow sand filter. For information on designing slow sand filters see "Designing a Slow Sand Filter," RWS.3.D.3. Where water needs no further treatment, the sedimentation basin can serve as a storage tank for the water supply.

Worksheet A. Calculating Quantities Needed for a Concrete Sedimentation Basin (Dimensions from Figure 2)

Total volume of each rectangle = length (l) x height (h) x width (w)

1. Volume of two sides = 4 m x 2 m x 0.25 m x 2 = 4 m^3
2. Volume of two ends = 1.5 m x 2 m x 0.25 m x 2 = 1.5 m^3
3. Volume of foundation = 4.5 m x 0.25 m x 1.5 m = 1.7 m^3
4. Total volume of structure from steps 1, 2, 3 = 7.2 m^3
5. Add 10 percent to cover extra height due to slope of bottom = .8 m^3
6. Total volume of structure from steps 4, 5 = 8.0 m^3

Volume of inlet structure:

7. Volume of bottom = 0.3 m x 0.25 m x 1.5 m = .11 m^3
8. Volume of side = 1.5 m x .75 m x 0.25 m = 0.28 m^3
9. Total volume of inlet from steps 7, 8 = .4 m^3

Volume of outlet structure:

10. Volume of bottom = 0.3 m x 0.25 m x 1.5 m = .11 m^3
11. Volume of side = 1.5 m x 0.55 m x 0.25 m = 0.20 m^3
12. Total volume of inlet from steps 10, 11 = .31 m^3
13. Total volume from steps 6, 9, 12 = 8.71 m^3
14. Unmixed volume of materials needed = total volume from step 13 x 1.5 = 8.71 m^3 x 1.5 = 13.1 m^3
15. Volume of each material (cement, sand, gravel 1:2:3)

    Cement: 0.167 x volume from line 14 13.1 m^3 = 2.2 m^3

    Sand: 0.33 x volume from line 14 13.1 m^3 = 4.3 m^3

    Gravel: 0.50 x volume from line 14 13.1 m^3 = 6.6 m^3
16. Number of 50kg bags of cement = $\frac{\text{volume of cement}}{\text{volume per bag}}$

    $\frac{\text{Volume of cement}}{\text{Volume per bag}}$ = 2.2 m^3 / .033 m^3/bag = 67 bags
17. Use about 28 liters of water for every bag of cement. Amount of water = 67 bags x 28 liters = 1.876 liters

Note: To save cement, a 1:2:4 mixture can be used with no loss of strength.