Water for the World

Taking a Water Sample

Technical Note No. RWS. 3.P.2

Laboratory or field analysis of water is one way of determining its quality. Tests for bacteriological quality and for physical and chemical quality are the two most important types of analysis for small community water supplies. These tests show the types and levels of contaminants present in a water sample. This information is essential in deciding whether a water supply must be treated. It is also important for choosing a specific treatment process.

Accurate analysis of a water sample depends on proper collection of the sample. Samples must be taken from several locations at different times so that they are representative of the entire water supply. Samples for "specific analysis" are those collected when a new water source is being developed, when an outbreak of water-related disease occurs, when there are changes in a water system, or when water pollution is suspected. Samples collected regularly to monitor an existing water system are for "routine analysis."

Methods of sample collection depend on whether the analysis to be made is bacteriological or physical and chemical, and on whether the sampling and analysis are routine or specific. The main considerations in sampling are to collect representative samples of the water supply and transport them quickly to the place where they will be analyzed.

The objective of water analysis is to measure any contamination present in the sample to determine the need for and level of treatment. Water analysis can be conducted in a laboratory or in the field. Field tests eliminate the problem of transporting water samples to laboratories.

Whenever possible, both bacteriological and physical and chemical water analysis should be conducted. Bacteriological sampling and analysis is the most important, however. Bacteriological contamination causes many infectious diseases and is most important to eliminate. Treatment processes for physical and chemical impurities are usually too costly and complex for rural areas.

Useful Definitions

BACTERIOLOGICAL CONTAMINATION - The presence of disease-causing microorganisms in a water supply.

CHLORINE - A chemical which can be added to water to kill disease-causing organisms.

CONTAMINANT - An impurity which makes water unfit for human consumption or domestic use.

PHYSICAL AND CHEMICAL CONTAMINATION - The presence of chemicals, suspended particles, bad taste, color or odor, or other impurities in water that make it offensive or poisonous to users.

STERILE - Free of living organisms.

Collecting Samples for Bacteriological Analysis

Frequency of bacteriological sampling. Bacteriological analysis reveals only the quality of the water at the time of the sampling. It does not necessarily represent the quality of the water at other times. Samples for bacteriological analysis should be collected over all seasons, during dry and wet periods and particularly after heavy rains. Each time, a number of

samples should be collected over a period of days. Analysis of a single sample is not reliable.

Exact frequency of sampling depends mainly on the population served by the water supply being tested. Water supplies serving greater populations need to be sampled more often. Frequency of sampling and analysis also depends on the quality of the water source, past contamination, risks of new contamination, and the complexity of the water system. No universal frequencies for sampling and analysis can be set because of all these variables.

For populations under 5000, one sample per month is suggested for routine bacteriological analysis of an existing system. For populations over 5000, one sample per month for each 5000 people is suggested. More frequent sampling and analysis are necessary after repairs are made to a system in areas where water-related diseases are common and in emergency situations (see "Water Treatment in Emergencies," RWS.3.D.5). For very small supplies serving fewer than 500 people, the frequency of sampling and analysis may have to be based entirely on the variables revealed by the sanitary survey. Water that is chlorinated must be tested very often to check the chlorine's effectiveness (see "Operating and Maintaining a Chemical Disinfection Unit," RWS.3.O.4).

Equipment. Samples for bacteriological analysis must be collected in sterile glass bottles with sterile stoppers. A paper or foil hood over the stopper and bottle neck is necessary. Stoppers can be made of ground glass or rubber. Figure 1 shows different types of bottles for samples. Normally, pre-sterilized sample bottles are obtained from a central laboratory. In an emergency, well-washed bottles can be sterilized in the field by boiling them for five minutes. If sample bottles are not sterile, any bacteria present on them will make the analysis useless.

The sample bottle must be kept sealed, and the stoppers and bottle neck should be covered with parchment paper or thin aluminum foil. The covering should be kept in place after sampling. Each sample should be at least 100ml in order to perform all tests required for bacteriological contamination.

Sampling sites. Samples should be collected from the places where people draw water. Samples drawn from a stream or river that is being developed as a new source should not be collected too close to the bank nor too deep under the surface. Areas of stagnation should be avoided. Samples should not be drawn from the same spot every time, but should be taken from different points.

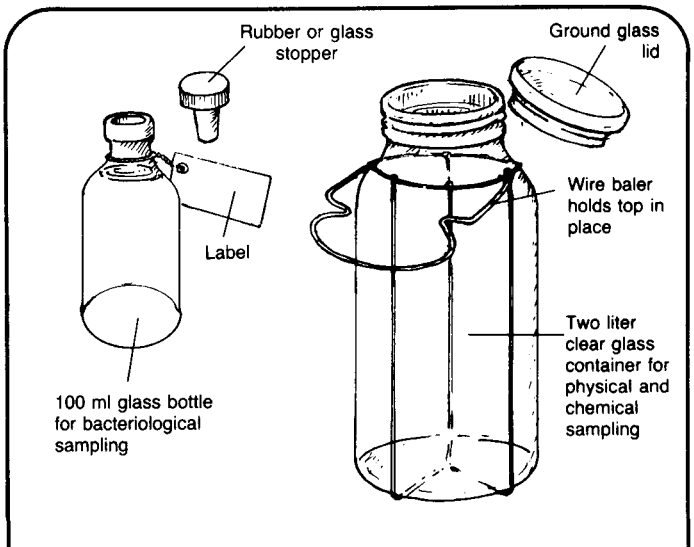

Figure 1. Types of Sample Bottles

In piped water systems, samples should be collected at all points where water enters the distribution system and at representative points where it leaves the distribution system. In addition, samples should be drawn from taps connected directly to the water main, not from the storage tank or a roof catchment. Special samples need to be drawn from known problem areas, such as areas with low pressure, areas with high leakages, and areas far from the treatment system, if one exists.

Procedure. Samples for bacteriological analysis must be very carefully collected to ensure that the sample is representative of the water supply and not contaminated by

other sources during collection or by the person taking the sample. Keep the stopper or cover on the bottle until the sample is collected. It is very important not to touch the inner portion of the stopper or the inside of the bottle neck when removing or replacing the stopper. During sampling, the stopper and the neck of the bottle should not be handled, and should be protected from contamination. Labels should be prepared in advance so they can be attached to the bottle immediately after the sample is collected.

Collecting a sample from a stream or river. Samples should be collected from midstream. Face upstream. If the sample is collected from a boat, take the sample from the upstream side of the boat. Figure 2 shows the collection procedure for a stream or river.

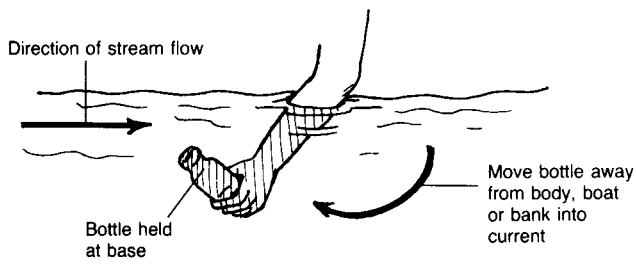

Figure 2. Taking a Sample from Stream or Lake

1. Remove the stopper from the bottle, being careful not to touch the inner portion of the stopper or bottle neck.

2. Hold the lower portion of the bottle. With the mouth of the bottle facing upstream, plunge the bottle, neck downwards, into the stream.

3. Tilt the bottle until the neck points slightly upwards, with the mouth facing the direction of the current. Allow the bottle to fill completely. Do not let any splashing water enter the bottle.

4. Carefully replace the cap and hood.

5. Label the bottle immediately.

Collecting a sample from a lake, pond or reservoir.

1. Remove the stopper from the bottle, being careful not to touch the inner portion of the stopper or bottle neck.

2. Hold the lower portion of the bottle. Plunge the bottle neck downwards, into the water.

3. Tilt the bottle so that the neck points slightly upwards. Move the bottle forward horizontally, away from the hand, body or boat, so that no water enters the bottle that has been in contact with the hand, body or boat. Allow the bottle to fill completely. Do not let any splashing water enter the bottle.

4. Carefully replace the cap and hood.

5. Label the bottle immediately.

Collecting a sample from a well or deep basin. Figure 3 shows the collection procedure for a well or deep basin.

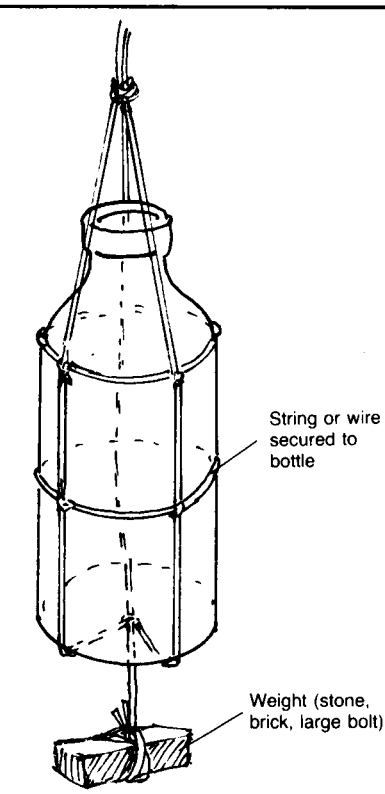

Figure 3. Weighted Bottle for Well Samples

1. With the stopper still in place, tie a length of rope or very strong string to the bottle.

2. Attach a stone or piece of metal to the bottom to weight the bottle down.

3. Carefully remove the cap from the bottle and lower the bottle into the well until it is about 1m below the water surface.

4. When no more air bubbles rise to the surface, raise the bottle out of the well and carefully replace the cap and hood.

5. Label the bottle immediately with date, time, place, receptacle depth and receptacle type.

Collecting a sample from a well with a hand pump.

1. Pump water to waste for at least one minute.

2. Remove the stopper from the bottle being careful not to touch the inner portions of the stopper or bottle neck.

3. Fill the bottle carefully, making sure no water that has touched your hands enters.

4. Carefully replace the stopper and hood.

5. Label the bottle immediately.

Collecting a sample from a tap.

1. Choose a tap that is farthest from the treatment system, if there is one.

2. Turn on the water and let it run fast for at least one minute.

3. Turn the water down so it runs slowly.

4. Remove the stopper from the bottle being careful not to touch the inner portions of the stopper or bottle neck.

5. Fill the bottle carefully, being careful not to let any water enter that has been in contact with your hands.

6. Carefully replace the stopper and hood.

7. Label the bottle immediately.

Labeling samples. All samples must be labeled or tagged immediately upon collection at the sampling site. Figure 4 shows the type of label that is needed. Information on the label should include:

1. Sample number;

2. Reason for sampling: bacteriological or physical and chemical, routine, specific, other;

3. The exact place from where the sample was taken:
a) type of sample source (pond, stream, pump, tap),
b) exact location of site;

4. Temperature of sample source;

5. Date, day, hour of sampling.

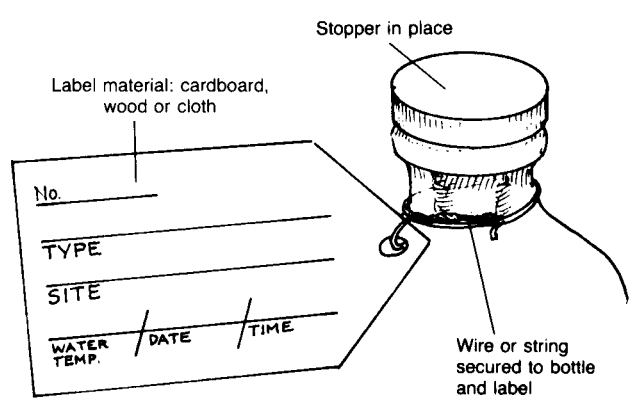

Figure 4. Sample Label

In addition, records similar to Worksheet A should be kept showing the following information:

1. Name and address of person or agency requesting sample;

Worksheet A. Suggested Record Form for Field Data Relevant to Water Samples

Agency or person requesting sample: _____ Sample No. _____

Reason for sample: ☐ Routine ☐ for bacteriological analysis

☐ Specific (explain) _____ ☐ for physical/chemical analysis

☐ for other analysis___

Date and hour of sampling _____

Sample Location:

Town: _____

Sample Source: ☐ Tap ☐ Cistern ☐ Stream ☐ Pond ☐ Well

☐ Spring ☐ Rain catchment ☐ Other (specify) _____

Exact spot from where sample was drawn: _____

Raw water source: _____

Is water treated? ☐ No ☐ Yes (If yes, specify type of treatment) _____

Does water quality change after heavy rains? ☐ No ☐ Yes If yes, explain (odor, color, taste, turbidity) _____

If sample is drawn from a well, specify:

Depth of well _____
Distance from water surface to ground level _____
Whether well is covered or uncovered _____
Type of cover, materials, condition of cover _____
Whether well is newly constructed or recently altered or repaired (explain) _____
Method of raising water (pump, rope and bucket, etc.) _____
Whether the well has a protective apron _____
Type, material, size and condition of apron _____
Well lining material _____
Possible sources of contamination _____

If sample is drawn from a spring, specify:

Whether sample is drawn directly from spring or collection box _____

Construction material and condition of collection box _____

If sample is drawn from a stream or river, specify:

Depth at which sample was drawn _____
Whether sample was drawn from boat _____
Possible sources of contamination _____

Length of time sample was stored before analysis _____

Temperature at which sample was stored _____

2. Identification of any treatment used, including where treatment is applied and in what dose;

3. Whether water is affected in appearance, odor or taste by heavy rains;

4. If sample is taken from a well:
a) depth of well,
b) depth of water surface to ground level,
c) whether covered or uncovered; nature, material and construction of the cover,
d) whether well is newly constructed or has any recent alterations that might affect the condition of the water,
e) type of well,
f) proximity of possible sources of contamination,
g) other visible signs of contamination,
h) nature of soil and water-bearing stratum;

5. If sample is from a spring:
a) type of ground from which it issues,
b) whether sample was drawn directly from spring or from a collection box; if from a collection box, detail construction of box;

6. If sample is collected from a river or stream:
a) depth at which sample was taken,
b) whether sample drawn from boat,
c) proximity and observations of possible sources of contamination.

Storage of samples. Changes occur in the bacteriological content of water when it is stored. To get an accurate analysis of the water supply, bacteriological analysis of the water sample is best begun within one hour of collection. Samples for bacteriological analysis must be tested within 24 hours of collection. When a field kit is used to analyze samples, testing within an hour of collection is possible. If samples must be transported to another site, it is often impossible to analyze them so soon. Therefore, they must be carefully stored and transported so they remain representative of the water supply at the time the sample was collected. Temperature of samples during storage should remain as close as possible to the temperature of the source from which they were drawn. The length and temperature of storage of all samples should be recorded and considered in interpreting the analysis.

Collecting Samples for Physical and Chemical Analysis

Frequency of physical and chemical samples. Sampling for physical and chemical analysis does not need to be done as often as bacteriological sampling. One complete chemical analysis each year should be adequate for most small communities. This should be done in a well-equipped laboratory. If a water supply has a history of containing harmful chemicals, if a new industry develops, if chemical insecticides or fertilizers are used in farming, or if other chemical contamination is suspected, monthly samples may be necessary.

Equipment. Samples of water for physical and chemical analysis must be collected in chemically clean bottles of colorless glass with ground glass stoppers. Bottles and stoppers for collecting water samples for chemical and physical analysis do not need to be sterile, but they need to be very clean. Wash them in a good detergent and rinse them three or four times in distilled water to remove all odors and residues. At least 2 liters of water need to be collected for a complete physical and chemical analysis.

Procedure. Collecting samples for physical and chemical analysis of water follows basically the same procedure as for bacteriological analysis. Rinse the bottle out at least three times with the water to be sampled. Fill the bottle completely and secure the stopper. Label or tag the bottle immediately, with the same information needed for bacteriological samples. Analysis should be done as soon as possible, and should not be delayed over 72 hours. Whenever possible, samples should be kept between 0°C and 10°C during storage and transportation.

Where several samples are being collected from the same source at the

same time, samples for bacteriological analysis should be collected first in order to avoid contaminating the sampling point with non-sterilized equipment. In either type of sample collection, the main considerations remain the same: obtain representative samples of water without contaminating them, seal the containers, and transport them quickly to the place of analysis.