Water for the World

Methods of Developing Sources of Surface Water

Technical Note No. RWS. 1.M

Water that does not infiltrate the ground is called surface water. Surface water appears either as direct runoff flowing over impermeable or saturated surfaces which then collects in large reservoirs and streams, or as water flowing to the ground from surface openings.

As water flows across surfaces, it picks up contaminants which may be harmful to humans and carries them into surface water sources. In order to use it for drinking, a surface water source must either be well protected or treated.

This technical note discusses four classes of surface water sources: (1) springs and seeps, (2) ponds and lakes, (3) streams and rivers and (4) rainfall catchments. It describes methods typically used to develop each source and discusses their advantages and disadvantages.

Springs and Seeps

A spring or seep is water that reaches the surface from some underground supply, appearing as small water holes or wet spots on hillsides or along river banks. The flow of water from springs and seeps may come from small openings in porous ground or from joints or fissures in solid rock.

There are two categories of springs: gravity and artesian. Within the gravity category, there are three principal types of springs: depression springs; contact springs; and fracture or tubular springs.

- Depression springs are formed when the land surface dips and makes contact with the water table in permeable material. Yield will be good if the water table is high, but the amount of available water may fluctuate seasonally. A gravity depression spring may not be suitable for a drinking water source since it may dry up.

Useful Definitions

ANNULAR SPACE - Small, ring-shaped space between pipe and ground, formed when a pipe is placed in the ground.

AQUIFER - A water-saturated geologic zone that will yield water to springs and wells.

CONTAMINANT - An impurity which makes water unfit for human consumption or domestic use.

ESTUARIES - Lowland areas where river waters meet tidal waters.

GRAVITY FLOW - Flow of water from high level to low by natural forces.

GROUNDWATER - Water stored below the ground's surface.

IMPERVIOUS - Not allowing liquid to pass through.

INFILTRATION - The process of water passing from the surface, through the soil, and into the ground.

INTAKE - The point where water enters a supply system.

WATER TABLE - The top, or upper limit, of an aquifer.

WATER TREATMENT - A process in which impurities such as dirt and harmful materials are removed from water.

- Gravity contact springs are formed when downward movement of underground water is restricted by an impervious underground layer and the water is pushed to the surface. This type of spring usually has a very good flow throughout the year and is a good water source.

• Fracture and tubular springs are formed when water comes from the ground through fractures or joints in rocks. Often the discharge is at one point and protection is relatively easy. Fracture and tubular springs also offer a good source of water for a community supply.

Springs in the artesian category occur when water is trapped between impervious layers and is under pressure. There are two types of artesian springs: fissure and artesian flow.

• Artesian fissure springs result from water under pressure reaching the ground through a fissure or joint. Yield will be very good and this source is excellent for a community supply.

• Artesian flow springs occur when confined water flows underground and emerges at a lower elevation. This type of spring occurs on hillsides and will also offer an excellent supply of water.

Before reaching the surface, spring water is generally free from harmful contaminants. To avoid contamination, the spring should be protected at the point where the water leaves the ground. There are three methods of developing springs as drinking water sources: spring boxes; horizontal wells; and seep development.

Spring Boxes. Figure 1 illustrates a spring box. A small area is dug out around the spring and lined with gravel. A concrete box with a removable cover is placed over the spring to collect and store the water. The cover prevents outside contamination and should be heavy enough to keep people from removing it to dip buckets and cups into the collection box. A tap and an overflow to prevent a back up in the aquifer should be installed.

The cost of developing a spring box is minimal and the system is relatively maintenance free. Disinfection is seldom required. Since springs are generally located on hills, a simple gravity flow delivery system can be installed.

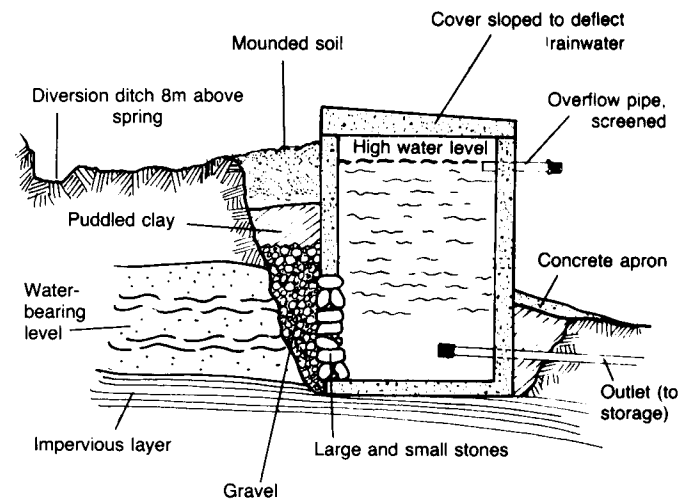

Figure 1. Spring Box with Pervious Side

A disadvantage of using spring water is that the quantity of available water may change seasonally. Local community members should be consulted as to the reliability of the source.

Horizontal Wells. Where a spring has a steeply sloping water table (steep hydraulic gradient), horizontal wells may be developed. Pipes with open ends or with perforated drive points or well screens can be driven into an aquifer horizontally or at a shallow slope to tap it at a point higher than the natural discharge. Figure 2 shows horizontal wells. Horizontal wells are installed in a manner similar to driven and jetted wells (see "Methods of Developing Sources of Groundwater," RWS.2.M) except that care must be taken to prevent flow through the annular space outside the pipe. Any flow can be stopped by grouting or by constructing a concrete cut-off wall packed with clay backfill.

The advantages and disadvantages of this method are similar to those of the spring box. Springs with flat water tables are not suitable for the use of horizontal wells.

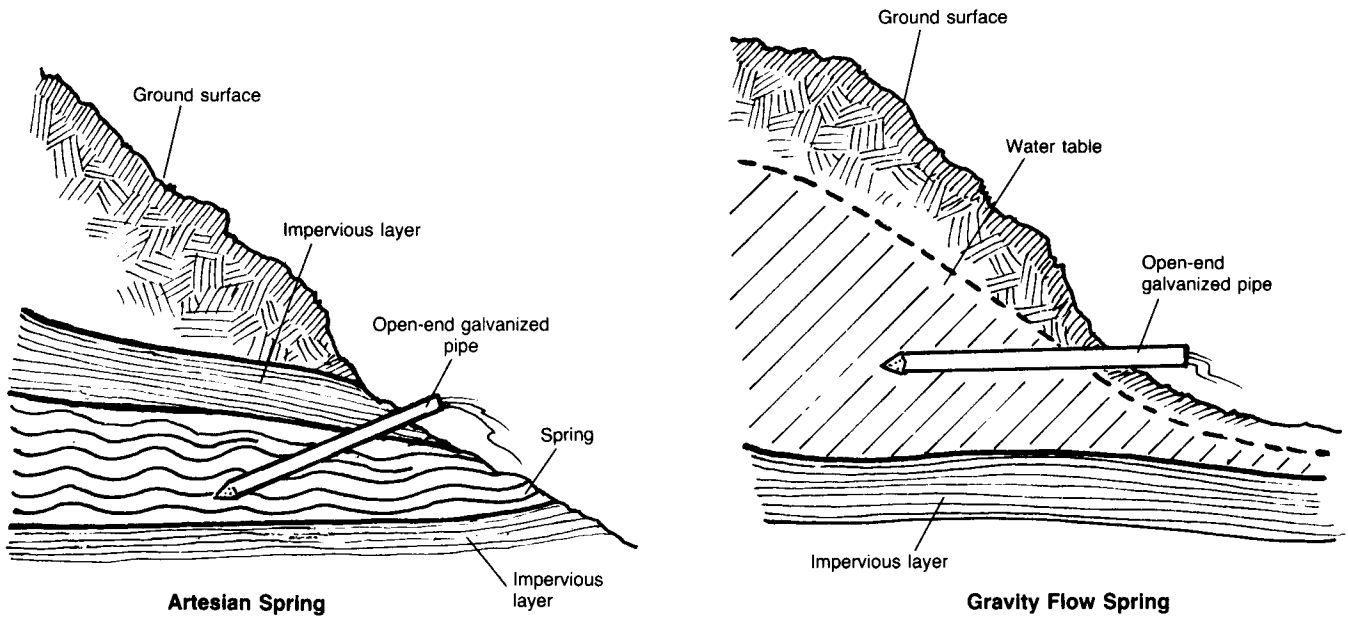

Figure 2. Horizontal Wells

Seep Development. If water seeps from the ground and covers an area of several square meters, a third method may be used. Pipes are laid to collect the underground water and transport it to a collection box as shown in Figure 3. A poured concrete wall just downslope of the pipes traps the water for more efficient collection.

With this method, maintenance costs are higher as pipes often clog with soil or rocks. Also, the expense and difficulty of construction may prohibit its use. Unless the seep supplies abundant quantities of water, this method should not be considered.

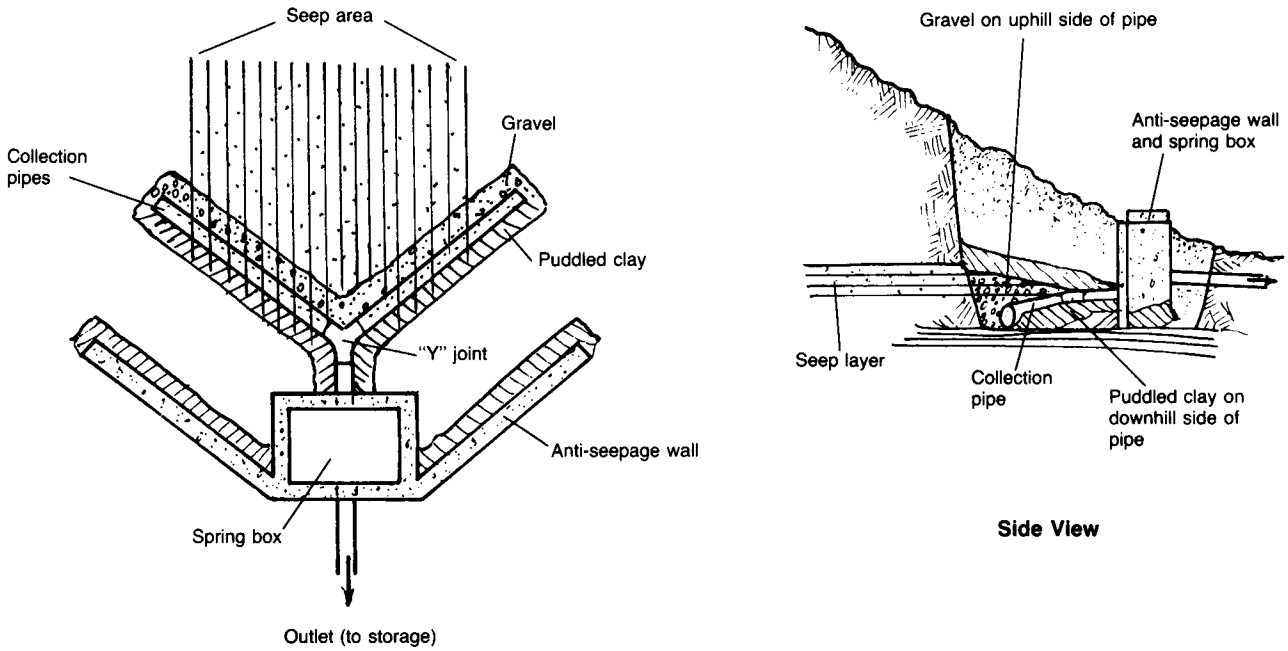

Figure 3. Seep Collection System

Ponds and Lakes

Ponds and lakes exist where surface run-off has accumulated in depressions or where a dam has been built to form a reservoir. Ponds and lakes, with proper watershed management for quality control, can be good sources of drinking water for a community. With good planning, adequate supplies will be available for community consumption throughout the year. Furthermore, the amount of available water is readily apparent and access to it is easier than to groundwater.

Because ponds and lakes are fed by surface run-off, treatment may be necessary. This is especially likely in smaller community ponds. In large bodies of water, a process of self-purification may occur that allows water to be used without treatment.

Another requirement of ponds and lakes is that water usually must be pumped through a distribution system to the point of use. Pumping machinery is expensive and requires a well-organized operation and maintenance program, and an energy source to operate the pump.

Intakes. To use water from ponds an intake is needed. Water flows by gravity or is pumped from the intake to treatment and then into storage. There are three methods typically used. Figure 4 shows a flexible plastic pipe intake. It is attached to a float and anchored so that it rests between 0.3m and 0.5m from the surface of the water. The intake is placed far enough below the water's surface to prohibit the entrance of any organic matter floating near the surface. A lower intake also takes advantage of somewhat cooler water below the surface. Water from the intake is either pumped directly into the distribution system or to treatment and then into the distribution system.

Where a dam has been built, the flexible plastic pipe is attached to a rigid conduit with anti-seepage collars. The conduit passes through the pond embankment to the treatment and storage tanks. If the water is very silty, treatment may consist of (a) a settling basin, which allows large particles to settle out of the water, and (b) a filtration unit where water must pass through a filter bed of sand and gravel before entering storage. For most pond waters, it should be sufficient to pump the water to a small holding tank and then allow it to flow onto a filter bed.

A variation of the above method can also be considered. A galvanized steel intake pipe is connected to a screened concrete storage box located on the reservoir floor near a dam's embankment, as shown in Figure 5. This system functions in the same manner

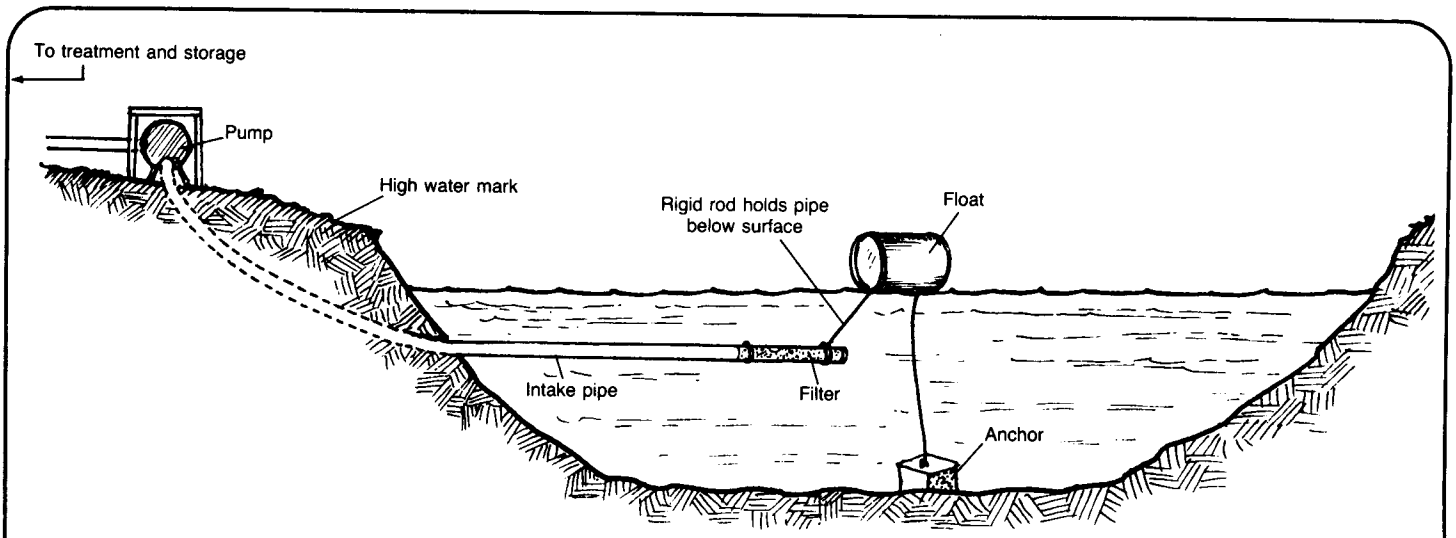

Figure 4. Flexible Plastic Pipe Intake with Float

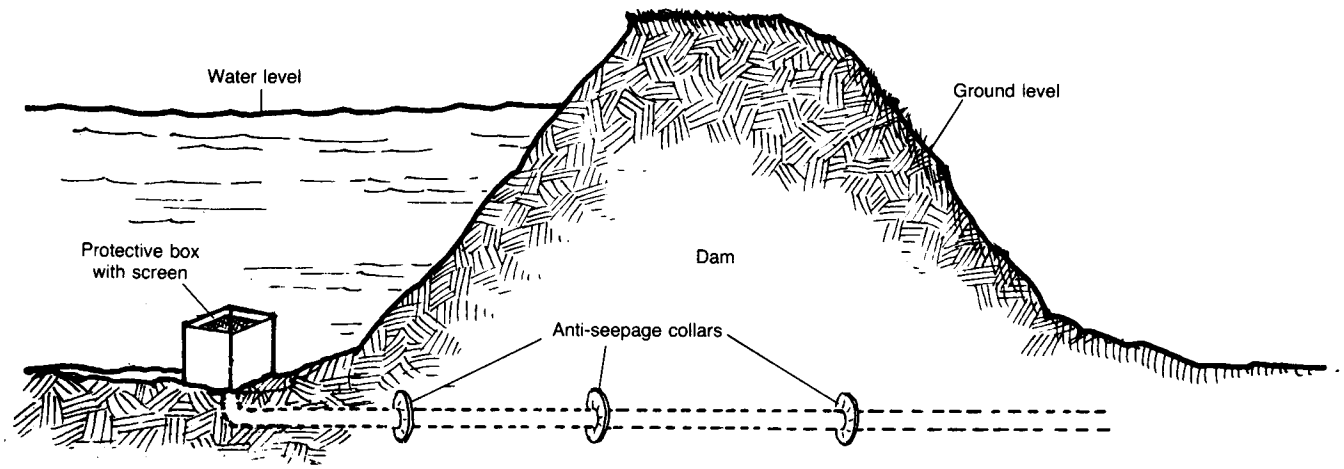

Figure 5. Rigid Pipe Intake at Dam

as the previous one, except that the intake is nearer the bottom of the reservoir. The water generally will be cooler and may be free of vegetation which often floats near the surface. In addition, the system will need less maintenance. The decision to adopt this method should be made before the dam is constructed since it is less easily installed in existing reservoirs. The expertise needed for construction and high cost make this method a less attractive choice.

The quantity of water available from ponds and lakes may not be a problem but quality will be a question. Generally, water from ponds and lakes must receive some treatment, whether at a central facility or in the household. Also, algae and decaying plants may give the water a taste unacceptable to the user, causing him to seek other water sources. Because of these variables and the cost of treatment, the use of water from ponds and streams should be carefully evaluated.

Streams and Rivers

Streams and rivers are formed by surface run-off from rainfall or from snow and ice melting in colder regions. Also, some rivers and streams have springs as their sources.

Streams and rivers have variable yield and water quality. Some streams and rivers dry up during the dry season and have no water for several months. People who depend on the river are left with little or no water. Rivers and streams are also exposed to contamination by waste disposal, laundry, bathing, and animals, and may prove unsuitable for drinking unless treated.

In mountainous areas or in places with few inhabitants, the quality of stream water can be very good, requiring little or no treatment. Streams in such areas offer a good source of water for a community. There are three methods of developing streams and rivers: infiltration wells and galleries; intakes connected to mechanical pumps; and gravity flow intakes.

Infiltration Wells. Digging or drilling a well near the banks of a stream or river is the cheapest and simplest method of development. The well should be close enough to the river channel to collect both water flowing underground and water seeping in through the channel, as shown in Figure 6. Generally, this will provide a very good supply of water throughout the year. Even if the river dries up during times of little rain, water will be available from the ground.

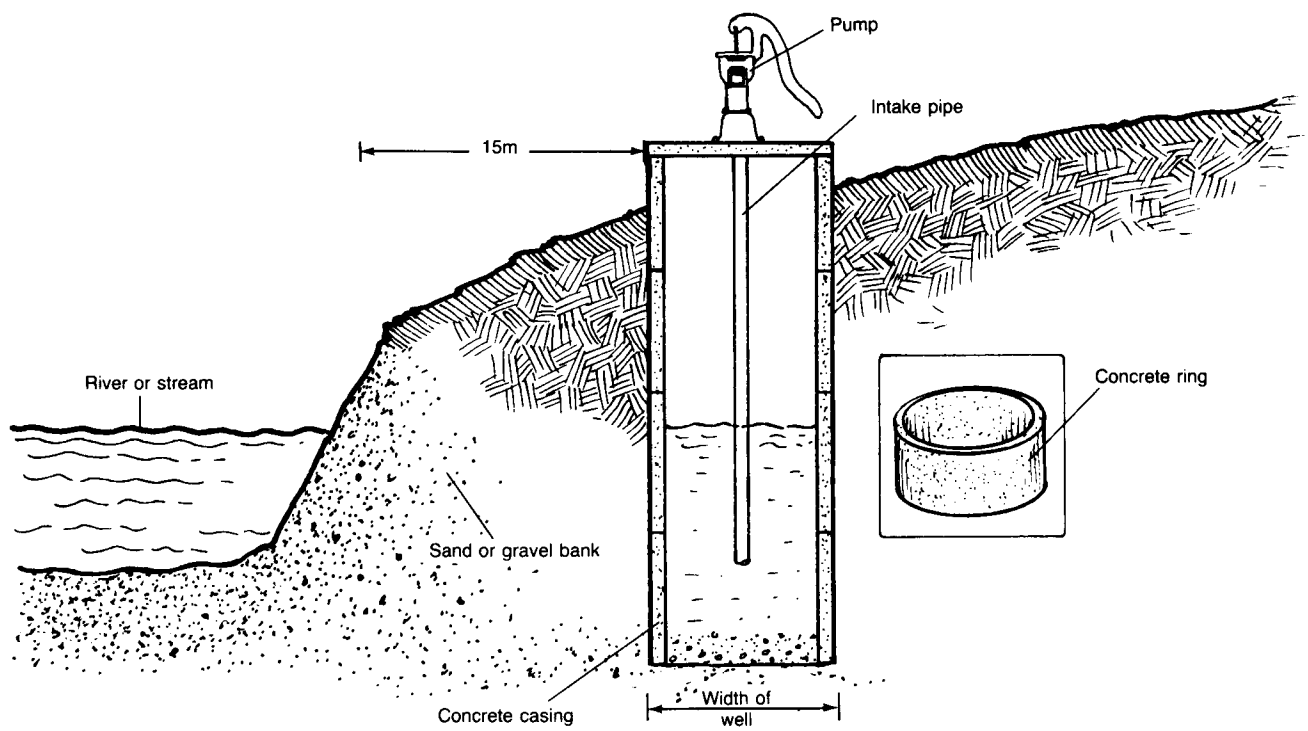

Figure 6. Riverside Well Intake

The water will also be filtered naturally. Water from the stream passes through the sand and silt in the river bank and impurities are removed. The degree of purification will depend on the extent of contamination of the stream and on the soil type. In many cases, the purification process will be sufficient to make treatment unnecessary.

A handpump, windmill or power pump can be installed to extract the water and pump it through the system. The pumping method chosen depends on the distribution system see "Methods of Delivering Water," RWS.4.M. If water will not be delivered further than the source, a handpump should be adequate. If water will be pumped to houses or a public standpipe, some type of power, such as diesel or wind, should be used. If a pump is installed, villagers must be trained in its operation and maintenance.

Infiltration Galleries. To increase the amount of water that can be collected by an infiltration well, infiltration galleries can be constructed. These trenches are dug in the bank parallel to the stream, below groundwater level, or below the stream bed itself. Tile, concrete or perforated plastic collecting pipes are placed in the gravel-lined trenches and connected to a storage well. The gravel in the trench filters out sediment and prevents clogging of the pipes. The water is pumped from the storage well into the distribution system in the same way as described for infiltration wells. See Figure 7.

Intakes with Mechanical Pumps. A surface intake pipe in the channel is another way of drawing the water from a stream or river. An intake pipe should be attached to a concrete well ring on the stream bed. A catwalk supports the pipe between the ring and the bank. Water is pumped from the stream to treatment. This method is shown in Figure 8.

To use this method, a stream with stable banks and a firm bed is needed. Skilled construction workers must also be available as the structure must be sound enough to withstand the stream's current. This method is more costly than riverside wells and requires more expertise.

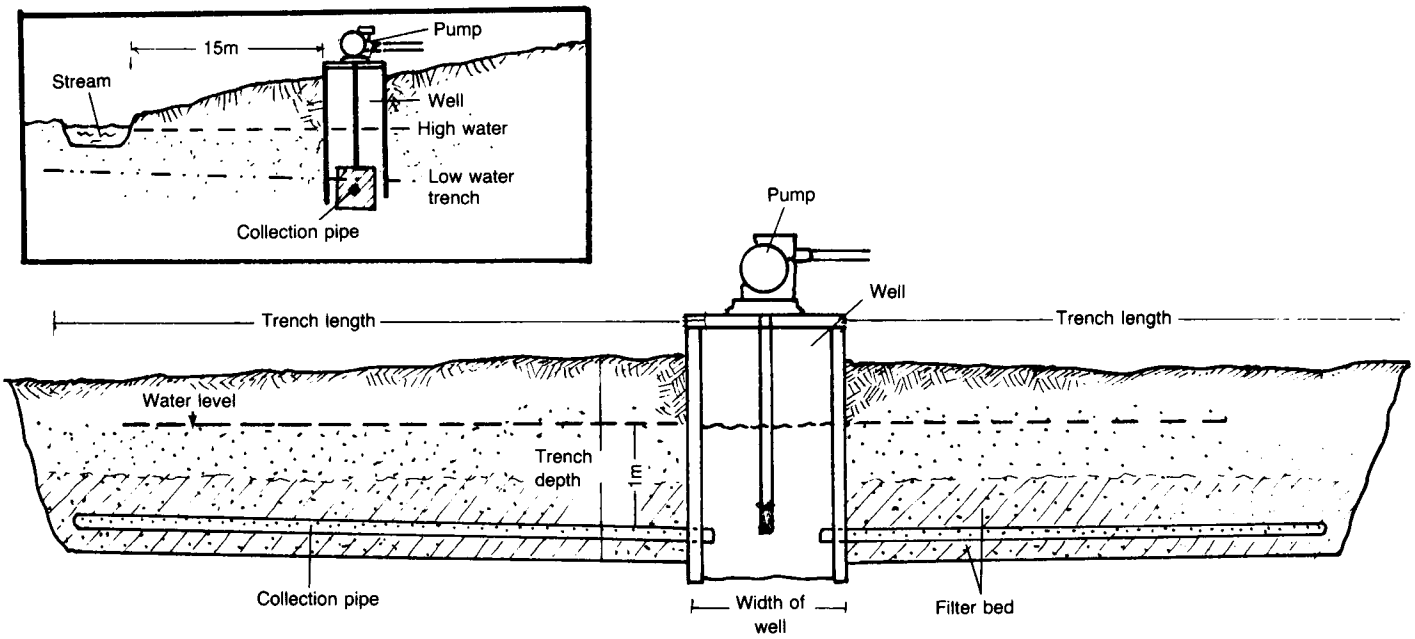

Figure 7. Infiltration Gallery

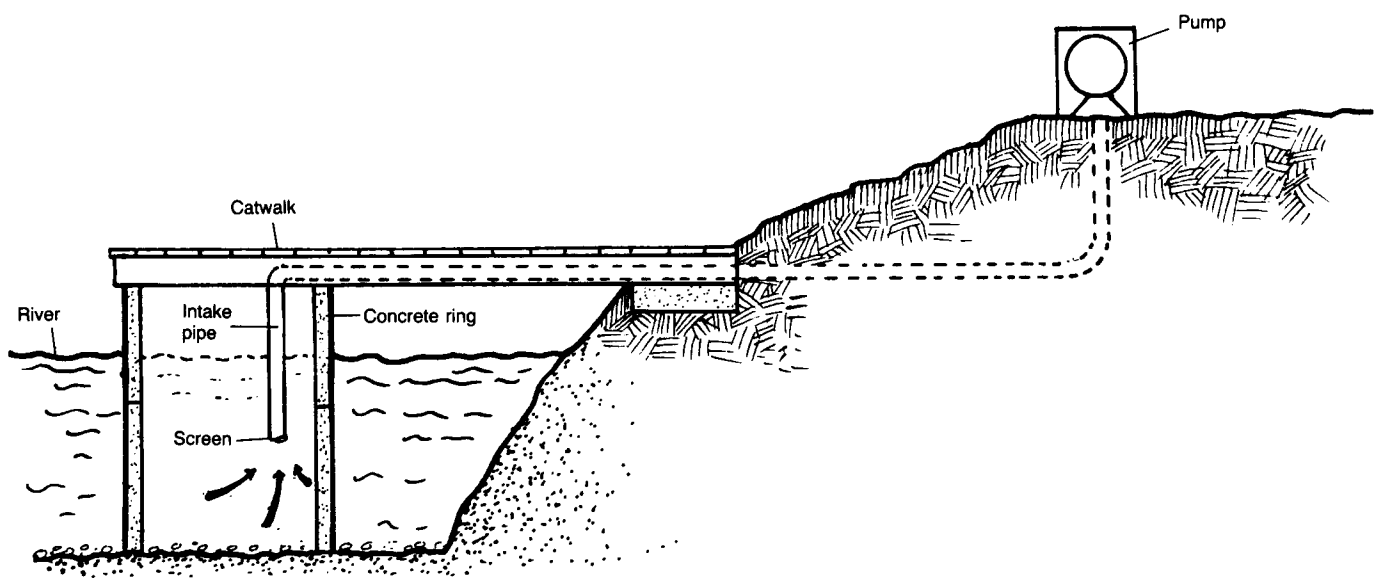

Figure 8. Protected Pipe Intake

Gravity Flow Intakes. Water from a stream can be carried to the user through a gravity flow system. This method is suitable for streams and rivers with enough changes in elevation to allow gravity to move the water from the intake to the storage tank. A concrete collection box with winged sides is constructed to catch water and direct it into a screened intake. The intake should be placed on the stream bed and anchored to the bank, as shown in Figure 9.

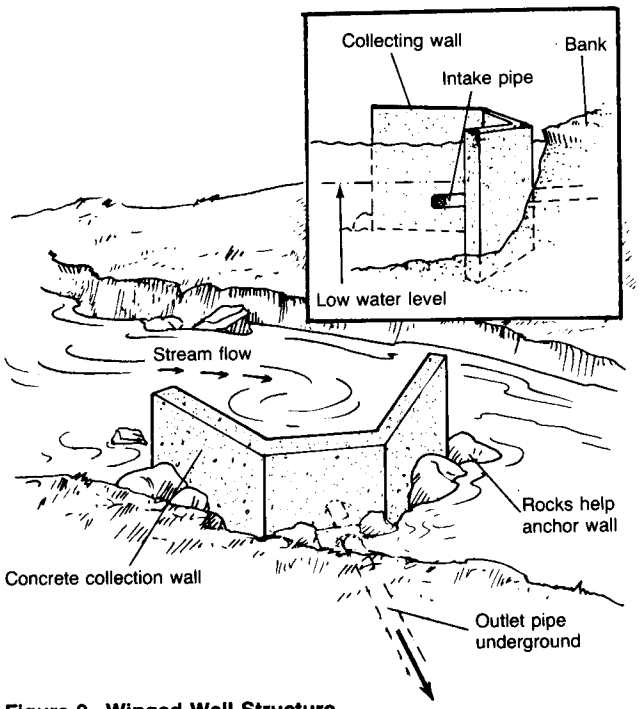

Figure 9. Winged-Wall Structure

Water will then pass from the intake into storage. No pumping will be necessary to supply a community with water, so little maintenance will be required. However, highly skilled technicians are needed to design and construct the system. As with the other methods, treatment will be necessary unless the area above the collection point is uninhabited.

In streams with sufficient fall, a hydraulic ram may be used to pump water to storage. The ram is an inexpensive and easily-maintained pump and can be constructed in the community. The ram is able to lift water from a stream into a storage tank without using an outside source of power see "Selecting Pumps," RWS.4.P.5.

Highly-skilled labor is usually needed for construction involved in developing rivers and streams. This will add to the cost of the project. As a general rule, stream water in low areas and estuaries is contaminated and will need some degree of treatment. Streams that are not exposed to human and animal wastes, and those at higher elevations with little population, will provide good water without treatment. Special care must be taken to choose a source located above inhabited areas if treatment is not available.

Rainfall Catchments

Rainfall catchments collect water from precipitation. They can be installed anywhere a suitable area is available. In areas of little rain or at times of drought, catchments can be used in combination with other surface sources. For example, water from catchments could be used for drinking and cooking while other sources met cleaning needs. There are two types of catchment systems: roof catchments and ground catchments.

Roof catchments. Roof catchment systems offer a simple and fairly inexpensive method of providing water to individual homes. Tile and sheet metal roofs can be adapted with pipes and gutters to trap water and transport it through a filter into a waterproof cistern. The cistern must be closed to avoid surface contaminants and must be disinfected periodically. Thatched or pitch roofs do not make suitable catchment areas due to seepage and potential contamination.

Rain catchments are as reliable as the weather and water may not always be available. Cisterns can be designed for large capacity storage at times when water is scarce. The system is basically maintenance free, except that gutters and pipes must be cleaned often to prevent clogging and contamination. Water quality may be fairly good to poor, depending on the amount of contaminants that settle on the roof between rainfalls, and water should be treated. An example of a roof catchment system appears in Figure 10.

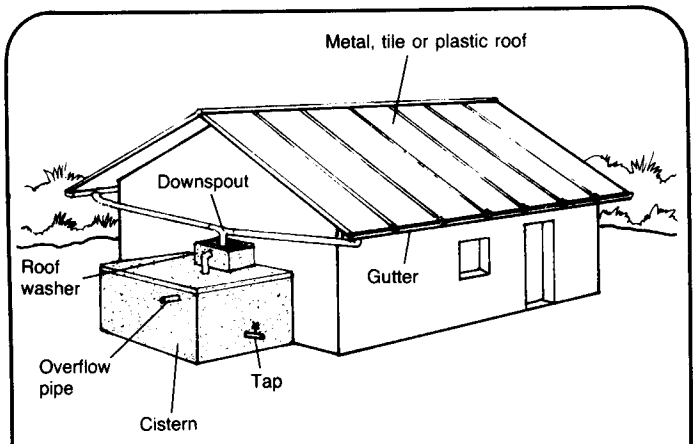

Figure 10. Roof Catchment

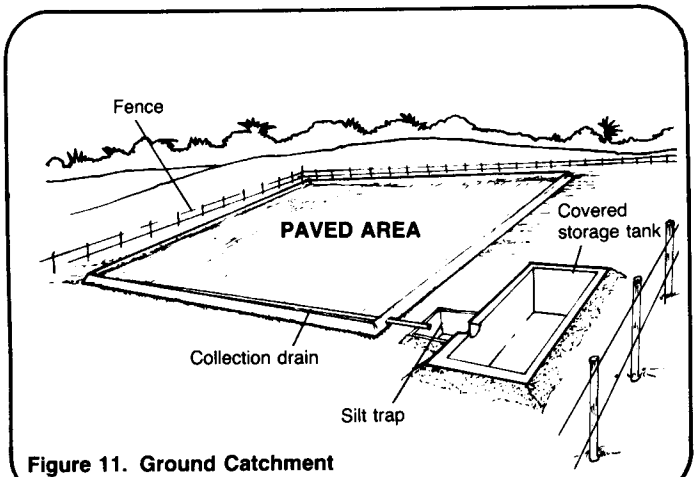

Figure 11. Ground Catchment

Ground catchments. Figure 11 shows a ground catchment system. An area of sloping ground several hundred meters square must be cleared, graded and preferably paved to form a catchment for precipitation. A paved area is desirable to reduce losses due to evaporation and infiltration, and to reduce erosion. A drain should be placed at the downward end of the slope to collect the water and deliver it to a sedimentation basin and into a storage tank.

Ground catchments are costly to install and must be carefully maintained. They also require large tracts of land that may not be available in a community.

Summary

Surface water sources can be developed for drinking water but special care must be taken to ensure the quality of the water. Springs generally offer the best alternative in terms of cost, water quality and maintenance. Spring water also is cool and fresh-tasting and very acceptable to the users.

Ponds and lakes offer good, accessible quantities of water. Water from ponds and lakes is easily delivered to users by installing intakes. Ponds, lakes, and especially small commnuity ponds are often exposed to contamination. Generally, water from them should not be used unless adequate treatment is available.

Streams and rivers also provide good sources of water if developed properly. Stream and river water that is naturally filtered into wells offers a good, low-cost method for using surface water. Untreated stream water from higher elevations is also available at low cost to the user. Near estuaries and at low elevations, contamination is likely and care must be taken before water is used.

Roof catchments offer the advantage that they can be constructed in the yard of the user if the house has a suitable roof. Each individual is responsible for his own system. Water quality is variable with rain catchments and will depend on the users' willingness to clean the roof often and disinfect the cistern occasionally.

Ground catchments provide a fairly good quantity of water and, with storage, a ground catchment system can meet the needs of a community. Ground catchments are expensive to install and use large areas of land which is scarce in many regions.

The choice of a method depends on many factors including the source and resources available and community preferences. These factors are further discussed in the technical notes on planning. Table 1 compares the various methods of developing surface water discussed in this technical note.

Table 1. Summary of Methods of Developing Sources of Surface Water

Method	Quality	Quantity	Accessibility	Reliability	Cost
Springs and Seeps	Good quality; disinfection recommended after installation of spring protection.	Good with little variation for artesian flow springs; variable with seasonal fluctuations likely for gravity flow springs.	Storage necessary for community water supply; gravity flow delivery for easy community access.	Good for artesian flow and gravity overflow; fair for gravity depression; little maintenance needed after installation.	Fairly low cost; with piped system costs will rise.
Ponds and Lakes	Fair to good in large ponds and lakes; poor to fair in smaller water bodies; treatment generally necessary.	Good available quantity; decreases during dry season.	Very accessible using intakes; pumping required for delivery system; storage required.	Fair to good; need for a good program of operation and maintenance for pumping and treatment systems.	Moderate to high because of need to pump and treat water.
Streams and Rivers	Good for mountain streams; poor for streams in lowland regions; treatment necessary.	Moderate: seasonal variation likely; some rivers and streams will dry up in dry season.	Generally good; need intake for both gravity flow and piped delivery.	Maintenance required for both type systems; much higher for pumped system; riverside well is a good reliable source.	Moderate to high depending on method; treatment and pumping expensive.
Rain Catchments	Fair to poor; disinfection necessary	Moderate and variable; supplies unavailable during dry season; storage necessary.	Good; cisterns located in yards of users; fair for ground catchments.	Must be rain; some maintenance required.	Low-moderate for roof catchments; high for ground catchments.