PN-AAK-950
ISN 6159

Appropriate Technology and Scaling Considerations for Developing Nations

The Fifth Chilean Congress of Chemical Engineering

October 18-20, 1979 ★ Valparaiso, Chile

Office of Engineering (DS/ENGR)
U.S. Agency for International Development
Washington, D.C. 20523

"APPROPRIATE TECHNOLOGY AND SCALING CONSIDERATIONS FOR DEVELOPING NATIONS"

THE FIFTH CHILEAN CONGRESS
OF CHEMICAL ENGINEERING

October 18-20, 1979
Valparaiso, Chile

Harold A. Le Sieur, P.E.
Office of Engineering (DS/ENGR)
U.S. Agency for International Development
Washington, D.C. 20523

ABSTRACT

MOST CHEMICAL ENGINEERS HAVE BEEN RAISED ON THE PROPOSITION THAT LARGE SCALE AND HIGH TECHNOLOGY ARE ESSENTIAL FOR PROCESS VIABILITY. CHEMICAL ENGINEERS INTERESTED IN MEETING THE CRITICAL WORLD SHORTAGE OF FOOD ARE INVITED TO BEGIN "THINKING SMALL", AT THE LEVEL OF THE VILLAGE ENTREPRENEUR OR FARMER. ECONOMY OF SCALE IS NOT ALWAYS APPROPRIATE, FEASIBLE OR EVEN POSSIBLE IN DEVELOPING COUNTRIES. APPROPRIATE TECHNOLOGY (DEFINED IN PAPER) MAY CALL FOR HIGH TECHNOLOGY IN CERTAIN CASES, BUT MORE OFTEN INTERMEDIATE OR LOW TECHNOLOGY BETTER FITS AVAILABLE RESOURCES. TO ILLUSTRATE, FOUR EXAMPLES ARE CITED, ALL BASED ON SALVAGING WASTE OR UNDERUTILIZED RAW MATERIALS FOR THE MANUFACTURE OF FOOD PRODUCTS OR FERTILIZERS AND CONSERVATION OF CRITICALLY SCARCE FOREST RESOURCES. FOR THOSE CHEMICAL ENGINEERS WILLING TO OPEN THEIR MINDS TO "SMALL IS BEAUTIFUL" ONE MAY PREDICT NOT ONLY TECHNICAL CHALLENGE BUT PROFESSIONAL AND SOCIAL SATISFACTION OVER A CONSTRUCTIVE CAREER.

"APPROPRIATE TECHNOLOGY AND SCALING CONSIDERATIONS FOR DEVELOPING COUNTRIES"

Harold A. Le Sieur, P.E., Office of Engineering (DS/ENGR), U.S. Agency for International Development, Washington, D.C. 20523

With populations of many developing countries doubling every 25 to 26 years, and less than one tenth of the earth's surface available for growing food, it is evident that the demand for food is growing far faster than food supplies. Considering simply that one third of the world population presently suffers from malnutrition should be ample evidence to spur the imagination of layman and professional alike. Nowhere more than within a convocation of Chemical Engineers can more applicable talent be found to meet this threat of starvation, since the unused or under-utilized raw materials to feed a hungry world in most cases exist within the very boundaries of the nations most needing this help.

One precaution is necessary, however: The Chemical Engineer who thinks only in terms of large scale processes and high technology is not going to be the one to meet this challenge most effectively. On the contrary, those of us who are trained in the broad discipline of Chemical Engineering--and desire to help meet this challenge--must become willing to "think small". At this level of appropriate technology, we shall be able to provide more food for the children and adults of the population explosion.

At the recent American Institute of Chemical Engineers annual convention in Houston, Texas, we were toured through the massive 1,340 hectare Exxon petrochemical complex, employing 3,800 people and costing over $2.3 billion. With a crude capacity of 102,000 cubic meters per day, these plants produce many major petroleum and petrochemical products. This is stimulating to most Chemical Engineers, who have been "brought up" to revere the concepts of high technology and economy of scale. Yet, my message to you today would be completely lacking, if I did not say: "If you want really to help a hungry world, you are completely on the wrong track" if you confine your efforts to this direction. This is not to denigrate the efforts of many developing countries to install large ammonia and urea plants (such as Syria and Sri Lanka, in my recent experience), but at least equal attention should be given by you and me to those plants which meet the definition and priorities of "Appropriate Technology."

For those Chemical Engineers who willingly heed this admonition and devote themselves to basic improvements in such technology, a creative, fruitful and satisfying professional career can safely be forecast.

What, then, do we mean by the term "Appropriate Technology"? Most, if not all of us present, have long since graduated from the belief that unlimited use of scarce resources and indiscriminate disposal of waste materials are normal and justified. Laws in developed countries and some developing nations require this attention. In the case of U.S. foreign aid, for example, mandatory attention is required to the environmental impact of every assistance project.

These concepts are all incorporated into the definition of Appropriate Technology, displayed in Exhibits 1 and 2. Thus, it is seen that project economics are no longer the sole criterion for project viability, but that priorities tend to favor labor-intensive processes which utilize replenishable raw materials and renewable energy resources and which result in upgrading a local population.

In some cases, a project can properly involve high technology, but more often the real need is for intermediate or simple technology. In this sense, there is a mutual responsibility: Developed nations must not "push" high technology where it does not well fit, and developing nations must guard against resenting the introduction of less than the ultimate in state-of-the-art technology when their countries are not really ready for such innovations. In my own experience, this is well illustrated by those nations which accept automated plants, only to see the instrumentation, servo valves and other equipment fall into disrepair and disuse for lack of maintenance skills and spare parts.

Exhibit 1

DEFINITION OF
APPROPRIATE
TECHNOLOGY

"An optimized technological solution to a set of local conditions, which includes problem-solving capabilities of indigenous people and a sensitivity to environmental and cultural impacts."

(i.e., economy of scale and high technology <u>not</u> necessarily appropriate)

Exhibit 2

APPROPRIATE TECHNOLOGY:

"A PROCESS, NOT A FORMULA"

Economic Priorities

- Fills definite domestic (or export) need
- Utilizes local materials
- Minimizes unemployment
- Benefits both consumers and producers
- Provision for spare parts and maintenance

Environmental Priorities

- Utilizes replenishable raw materials
- Utilizes renewable energy resources
- Minimizes pollutants
- Minimizes waste (e.g., recycling)

Social Priorities

- Enhances quality of life
- Provides creative work
- Respect for cultural values and practices
- Utilizes existing skills or provides training
- Mutual respect and consultation

Level of Technology

- Can be simple, intermediate or high technology.

If we then accept the proposition that criteria other than simple economics must govern the choice of processes to feed and fuel a hungry world, let us consider a few examples of processes which meet a significant number of priorities in the Appropriate Technology listing (Exhibit 2). In each case, the common denominator of these processes will be employment of unutilized or underutilized raw materials and processing units capable largely of local fabrication. Two of these are based on fermentation of waste food or agricultural residues common in humid developing countries, a third offers a partial solution to the rapid deforestation problem in such countries and the fourth provides on-site generation of essential fertilizers at the individual farm or village level.

FOOD AND FEED FROM FOOD WASTES AND AGRICULTURAL WASTES

Fermentation of food and agricultural wastes offers Chemical Engineers a process tool for contributing to the solution of two pressing problems simultaneously: the world shortage of food and the environmental pollution caused by food processing wastes and agricultural residues. Abundant raw material sources are available in most tropical countries of the world, as lustrated in Exhibit 3. As an example of food refuse, we shall consider wasted bananas and to illustrate utilization of agricultural residues let us study the discharged sludge from palm oil processing.

Bananas are produced in most countries in the humid tropics, with Ecuador, Panama, and the Philippines being the largest growers. As shown in Exhibit 4, up to 50% of total banana harvest can be wasted in certain countries, with 15% to 30% being quite normal.

Disposal of unacceptable bananas and stalks--beyond that which can be fed to swine and cattle or utilized in by-products (puree, banana chips, glue, rope)--can result in stream pollution or highly objectionable odors and environmental pollution. Yet means are available to convert such wastes into single-cell protein (SCP), for immediate use in animal rations and eventual development into a food supplement suitable for humans. As noted in the pro-con analysis or critique of Exhibit 8, these wastes are already centrally collected, and available on a year-round basis in quantities sufficient for a fermentation plant of reasonable size.

Exhibit 3

RAW MATERIAL SOURCES
FOR
BIOLOGICAL FERMENTATION

	Metric Tons per year *	
Bananas	2.1×10^6	Ecuador
	2×10^5	Panama
Cassava (Tapioca)	30×10^6	Brazil
	9.4×10^6	Indonesia
	3×10^6	Thailand
	1.8×10^6	Philippines
	0.92×10^6	Colombia
Coconut	30×10^9 nuts/year	World (Philippines 33%)
Coffee Cherries	$.53 \times 10^6$	Colombia
	$.37 \times 10^6$	Brazil
	$.31 \times 10^6$	Ivory Coast
	$.18 \times 10^6$	Guatemala
Palm Oil	1×10^6	Malaysia
	$.52 \times 10^6$	Indonesia
	3.2×10^6	World
Sugar	88.6×10^6	World
Milled Rice	200×10^6	World (90% S.E. Asia Far East)

*Total tonnage, including saleable product and waste.

EXHIBIT 4

WASTE BANANAS

AS RAW MATERIAL

	Metric Tons per year	% Total
Ecuador	3.0×10^5 to 6.0×10^5	15 - 30%
Panama	2×10^5	15 - 30%
Philippines	1×10^5	15 - 50%
Nigeria	1×10^5	40 - 50%

During the past 15 years, a wide variety of SCP processes have been developed. There is no one SCP process that fits all raw material supplies and product needs. In the case of bananas, fermentation technologies differ for green bananas (high starch) and ripe bananas (low molecular weight sugar). Considering the case of green and ripe bananas as a raw material for SCP production, we may examine the University of Guelph (Canada) process of K.F. Gregory utilizing cassava as a substrate and a thermophilic fungi (Aspergillus fumigatus) for operation under nonsterile conditions. Pilot studies using this process are being carried out at the International Center for Tropical Agriculture (CIAT) in Cali, Colombia.

This process has also been studied by the League for International Food Education in cooperation with the American Institute of Chemical Engineers, under a survey grant by the U.S. Agency for International Development. It is assumed by these researchers that any source of starch should be suitable as a substrate including ripe and especially green plantains and bananas. The International Food Education League team has recommended that a dry, high-protein (35%-45%) meal of animal feed-grade be produced utilizing the Gregory process with the poultry feed industry as the primary target. It is noted that the production and sale of balanced animal rations and feed ingredients is well-advanced in Ecuador, which is also one of the largest banana producers in the world.

Exhibit 5 illustrates the proposed process for mascerating either whole or peeled bananas and mixing with nutrients and water to form a medium. This medium would be pumped to one of a series of fermenters until the vessel was filled to operating volume. Heating to 70°C for approximately 10 minutes would follow, to gelatinize the starch and partially sterilize the mass. After cooling to 45° to 50°C, innoculation with a seed culture of the fungi, and fermentation under aerobic conditions for some 20 hours, a 50% cell yield could be expected. Mycelia and undigested banana solids could be harvested from the culture by simple filtration on a rotary vacuum filter. The solid filter cake could be dried in a rotary kiln and passed through a flaker to produce a meal-like product. Drying in the kiln would inactivate all cells. Exhibits 6 and 7 provide material balances for the feed-grade and human-grade SCP processes.

It is true that the proposed fungi is not yet as well accepted or used in animal feeds as ordinary yeasts, which means market development activity would be necessary. Estimated costs for protein feed from banana substrate are $30.80 for an 8% feed, $45.20 for a 1[illegible]% feed and $66.80 per ton for an 18% protein feed.

If these cost figures are compatible with competitive feeds (or even if they are not), it is clear from Exhibit 8 that the economic, environmental and social priorities associated with Appropriate Technology (Exhibit 2) are incorporated to a remarkable degree in the use of waste bananas to manufacture a high-protein animal feed ration in certain humid countries.

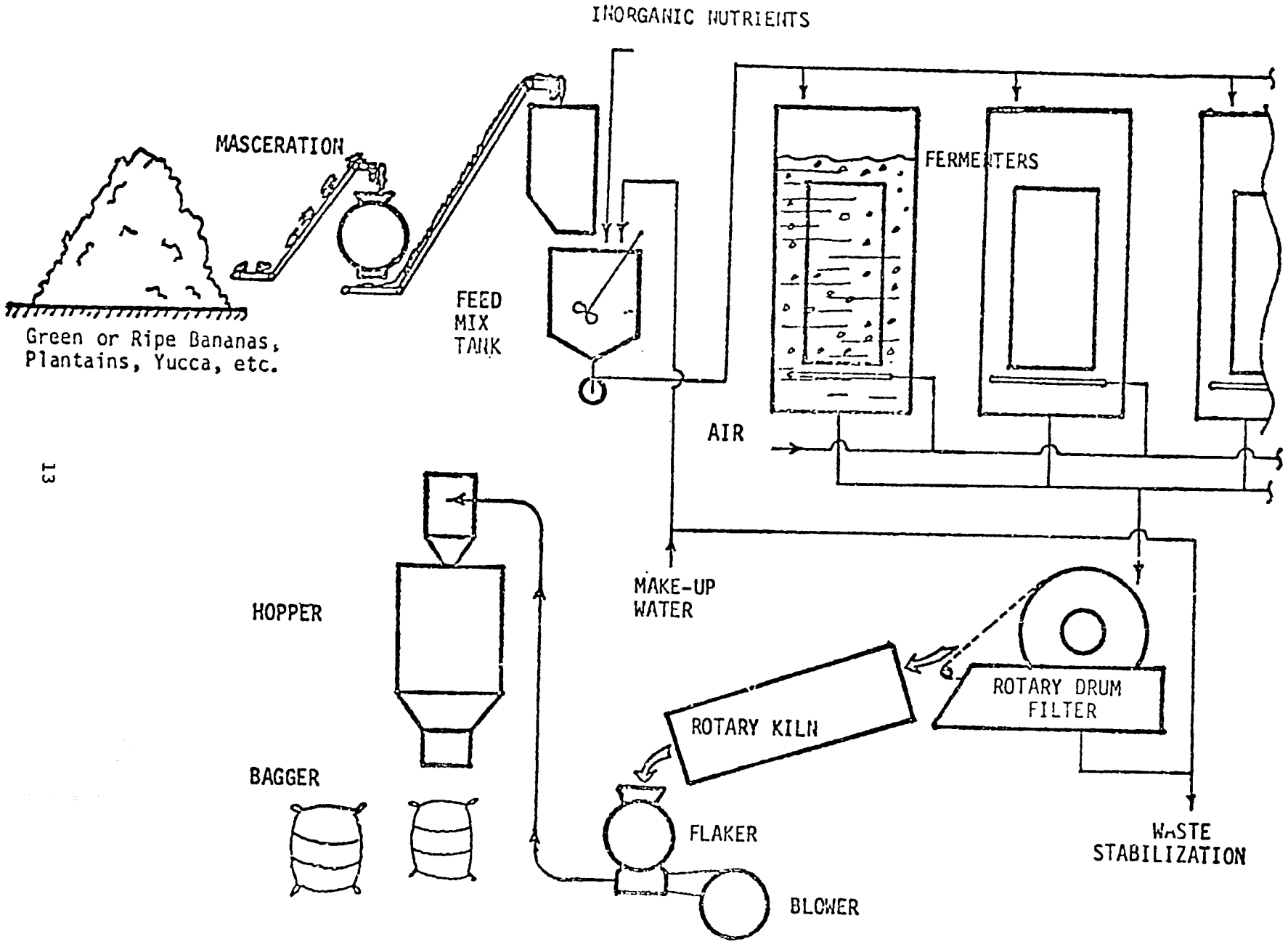

EXHIBIT 5. PRELIMINARY FLOW SHEET-FUNGAL SCP FROM BANANAS

EXHIBIT 6

HIGH-PROTEIN ANIMAL FEED BY

FUNGAL FERMENTATION

(Material Balance)

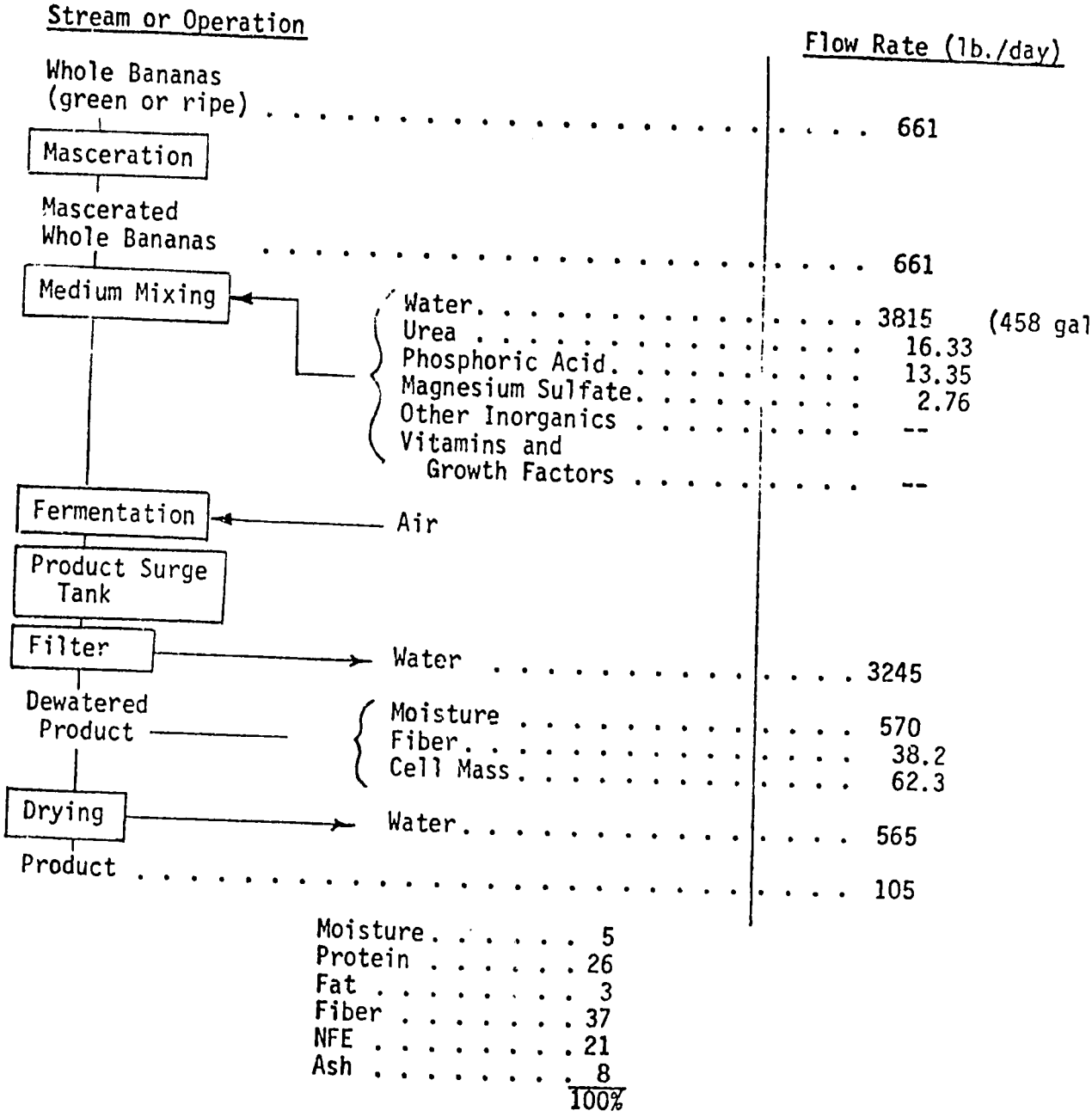

EXHIBIT 7

ACID-STABILIZED FOOD PRODUCT

BY BANANA FERMENTATION

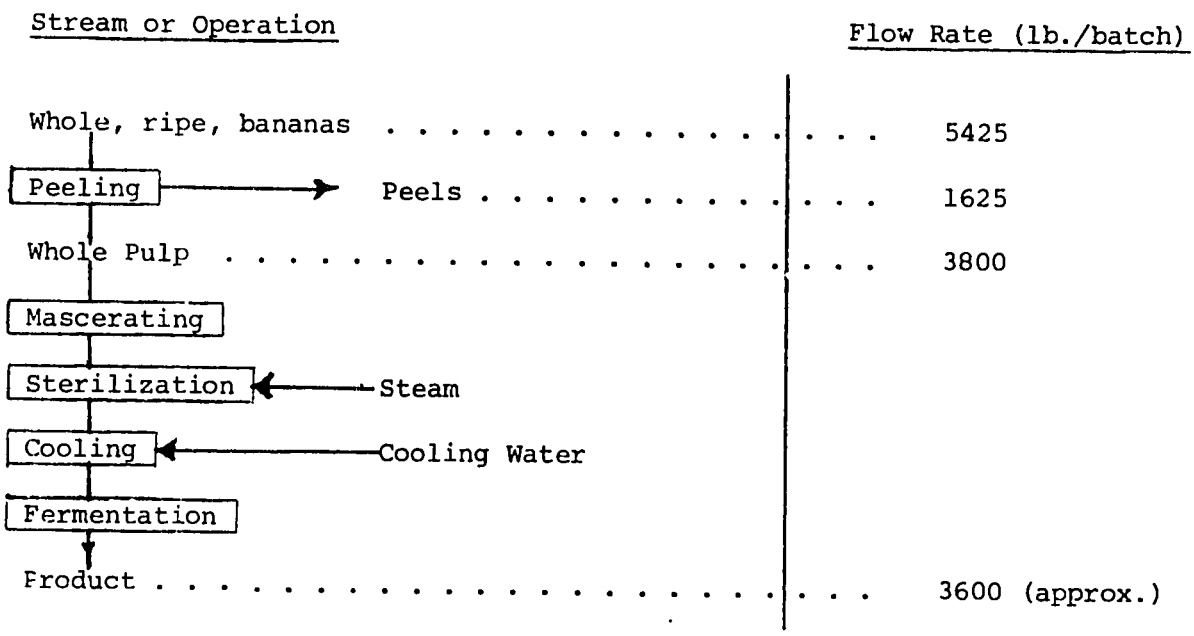

EXHIBIT 8

CRITIQUE OF BANANA FERMENTATION FOR

ANIMAL FEED

Advantages	Disadvantages
1. Transportation and central gathering of waste bananas already practiced.	1. Fungi involved less used as animal feed than yeasts a) Risk of consumer rejection b) Risk on nutritional problems c) Protein content lower
2. Year-round production (waste production constant)	
3. Quantity sufficient for reasonable size plant.	
4. Utilizes waste material a) Green as well as ripe bananas (using A. fumigatus) b) All starch usable if gelatinized	
5. Myalial fungi easy to harvest and separate (cloth or screen filter)	
6. Non-aseptic, simple fermentation possible (pH 3.5-4.0, 45°C - 47°C)	

ANIMAL FEED FROM OIL PALM WASTEWATERS

Palm fruit is grown principally as a source of crude palm oil from the fruit pericarp, or outer fleshy pulp, and palm kernel oil from the inner kernel or nut. Palm oil in the pericarp constitutes 32% of the total fruit weight, or 47% of the pericarp alone; palm kernel oil, while highly valued, amounts to only 3% of the total fruit.

Palm oil ranks second in importance to soybean oil as a food oil source, finding wide use as a refined product in food and soap products and also as a raw material for fatty acid production (Exhibit 9).

Palm oil is not presently a significant industry in Latin America although interest has been evidenced in such countries as Honduras. Nevertheless, we may use palm oil waste recovery example of appropriate technology which would have application to other food and agricultural residues found in South and Central America. World palm oil production in 1976 was 3.2 million tons with Malaysia as the world's largest palm oil producing country, accounting for 1/3 of this total. Indonesia is increasing its production, and the oil is also produced in Thailand and Africa.

Before considering how palm oil wastewaters may be salvaged, a brief review of the process for extracting palm oil will be useful. Referring to Exhibit 10 for Malaysian practice, this semi-continuous process includes four steps: sterilization, bunch stripping, oil extraction and oil clarification and purification. Sterilization is accomplished using live steam (35-40 psi) for 50-75 minutes. This deactivates enzymes responsible for oil decomposition into free fatty acids, loosens fruit from bunches and serves to coagulate

EXHIBIT 9

PRODUCTS OF

PALM FRUIT

Refined Palm Oil

Margarine

Shortening

Cooking Oil/Fat

Vanaspati

Soap

Ice Cream Fats

Commercial bakery products

Glycerine

Palm Oil Fatty Acids

Ore flotation

Hair dressings

Soap/shampoo

Cosmetics, Facial

Water repellants

Dry cleaning

Rosin soap

EXHIBIT 10

PALM OIL PRODUCTION IN MALAYSIA

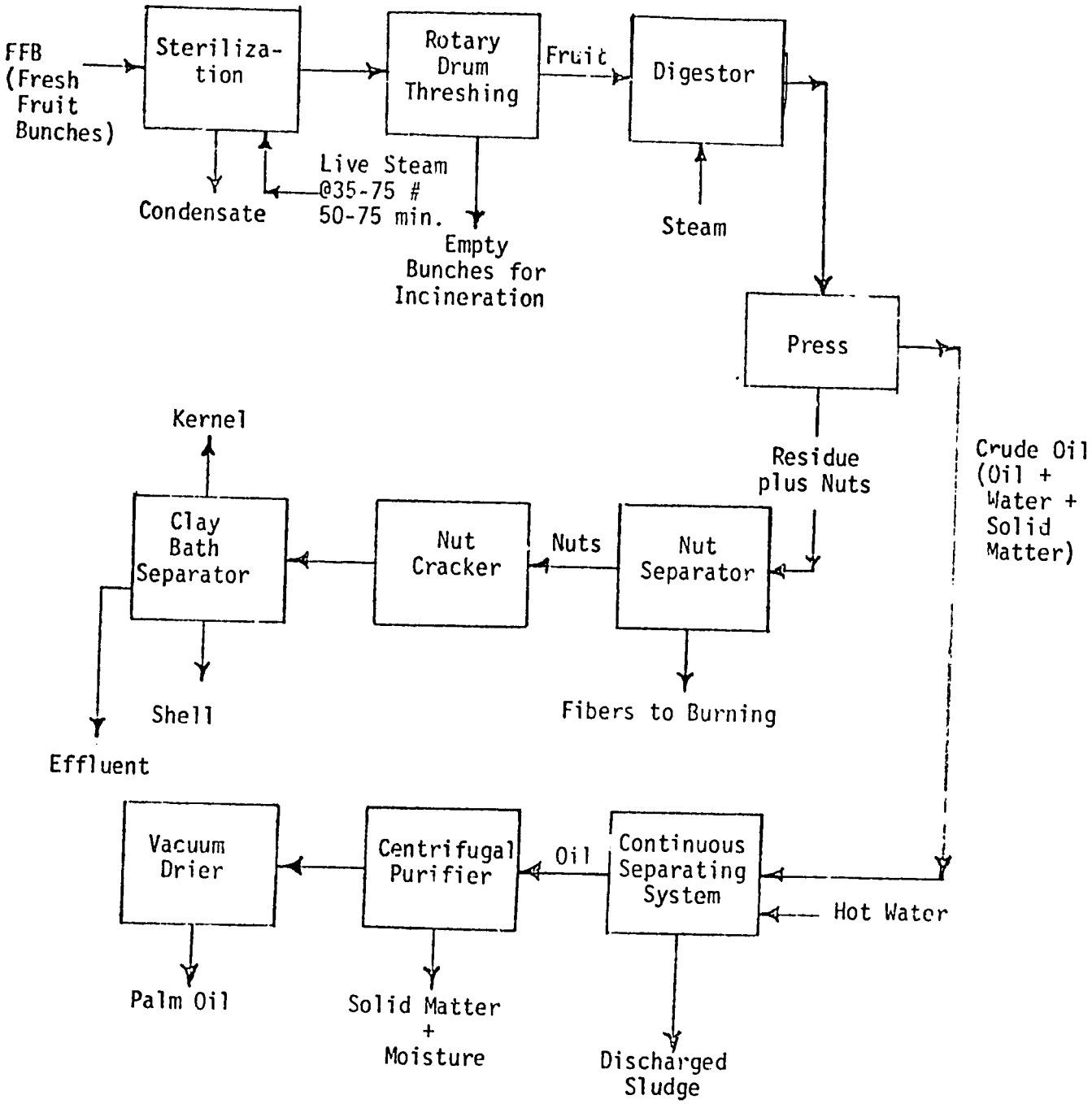

muscilage. In the second stage of processing, sterilized bunches are fed continuously into a rotary-drum thresing or stripping machine which strips and separates fruit from bunches, discharging empty bunches to incineration. A steam digester next converts fruit into a homogeneous oily mash suitable for pressing. Crude oil is extracted under pressure either hydraulically or by means of a worm-screw, and consists of a mixture of oil, water and fine solid material. This mixture is next separated into an oil-rich layer, which is subsequently centrifuged and vacuumed-dried to a moisture content of 0.1% and into waste solids. These solids are the raw material for various recovery processes such as the CENSOR process to be described using Exhibit 11 . Nuts and fibrous residue from the palm oil process are further separated and recovered as whole kernels for export and fibers for fuel in steam boilers.

An average oil palm mill in Malaysia may discharge 220 tons of effluent per day, which could yield 9 to 10 tons of animal feed. In the CENSOR (centrifugal solids recovery) process, developed by Dr. Brian Webb of the University of Malaya, these oil palm wastewaters are first dewatered then dried by mixing with various adsorbents such as tapioca and oil palm kernel meal. This adsorption step reduces the total amount of heat otherwise required in a rotary drum drier to produce an acceptable final product moisture. Tapioca and oil palm kernel meal also serve to increase feed nutrition value and as a conditioner.

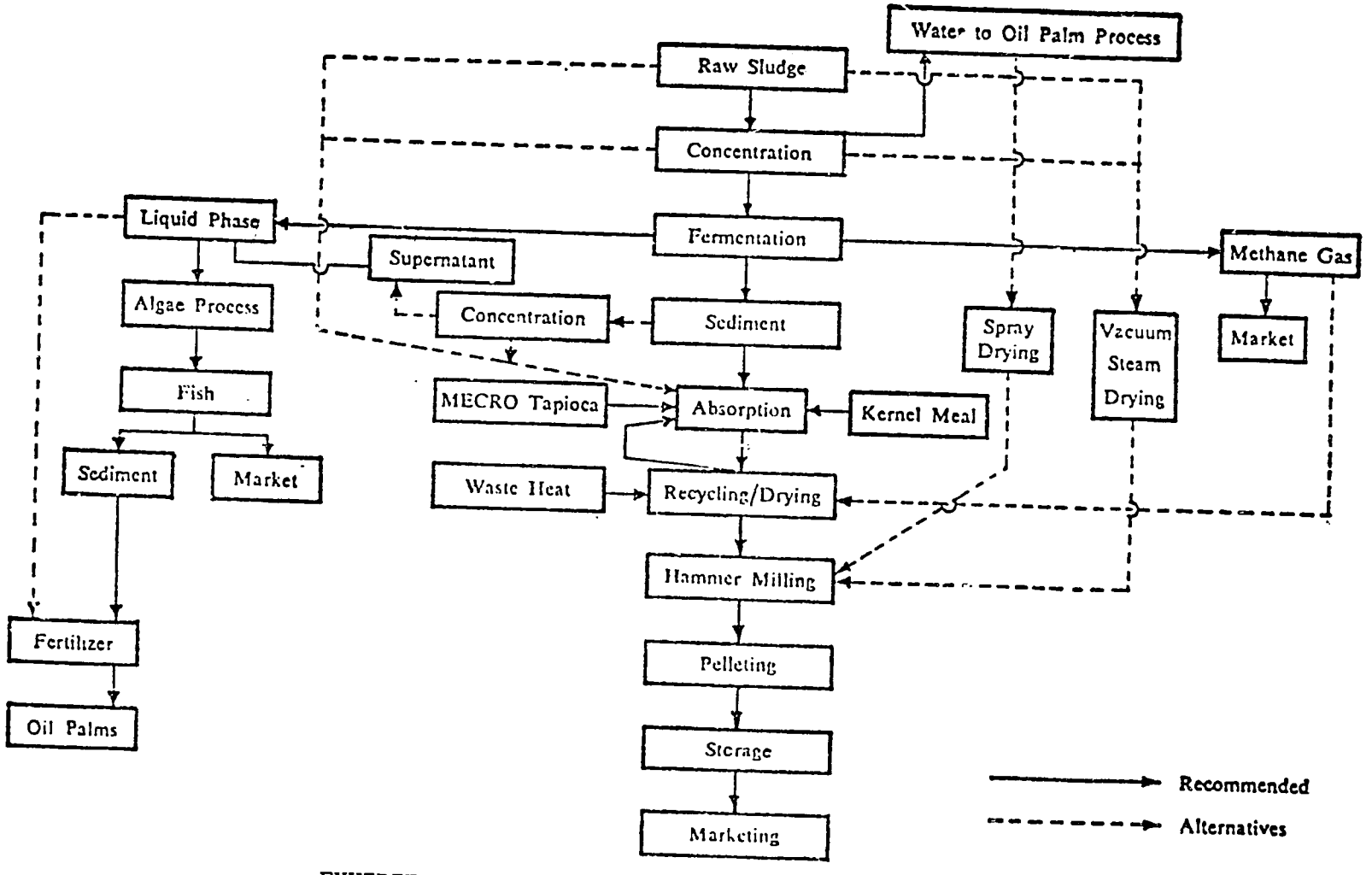

EXHIBIT 11. CENSOR FLOW PROCESS CHART

The first requirement for an economical recovery system is to concentrate the raw sludge effluent to reduce the very high moisture content. After a first stage reduction from 90-95% moisture using centrifugation, ananerobic fermentation step further concentrates the wastewaters and increases the crude protein content. This improves the product for animal feed purposes. A liquid phase suitable for fish culture and fertilizer, together with by-product methane, are also produced. Following fermentation, sedimentation further reduces moisture content before the adsorption step. Since such high moisture contents are involved in dewatering slurries, a recycle step through the adsorption stage is necessary to build up the solids content of final feed meal product. Using fermentation sediment only three recycles are required compared to at least eight cycles using raw untreated sludge.

There are various modifications possible to this concept which would result in different quality meals and different costs. Extraction systems utilizing spray-drying and vacuum steam drying are not considered economic propositions because of high energy requirements. One can eliminate the fermentation process and directly absorb raw sludge into the drying process, but this will give a meal of lower protein content. Eliminating the use of kernel cake in favor of tapioca only will reduce the protein content of final feed product and double the land area required to grow the quantity of tapioca required. As illustrated in Exhibit 12, advantages of this process are significant where excess crops for adsorption can be readily grown.

EXHIBIT 12

CRITIQUE OF ANIMAL FEED FROM OIL PALM WASTEWATERS

(Censor Process)

Advantages	Disadvantages
1. Utilizes local materials (waste palm oil sludge, palm kernel meal, tapioca)	1. Requires large quantities of absorbents
2. Fermentation step improves process efficiency	a) Tapioca, oil palm kernel presently evaluated
a) Improves protein content vs. direct sludge absorption	b) Sourghum, maize, alfalfa, grain under investigation.
b) Conserves on absorbent (50% savings)	c) Land area required for growing.
3. Dry animal feed product; fertilizer by-product	d) Centrifuging step can reduce requirement.
4. Process is energy-efficient	
a) Gelation occurs without heating	
b) Waste boiler heat used for drying	
c) Methane gas by-product	
5. Simple and cheap to operate	
6. Gives well-balanced feed product	
a) Approximates maize	
b) Replacement 50% maize feasible	
7. Eliminates transport costs to feed production sites	
a) Integration with palm oil mill	
8. Eliminates or reduces environmental pollution source.	

Actually, to be consistent with the theme of this paper, we should recognize that the CENSOR process represents relatively high technology, although still appropriate in the context of Exhibit 2.

A further extension of palm oil technology is the production of fatty acids. This process has been studied, for example, by the Malaysian Government and uses for fatty acids are summarized in Exhibit 9 .

PYROLYTIC CONVERSATION OF AGRICULTURAL AND FORESTRY WASTES

In the case of Indonesia alone, at least 17 million tons of combustible wastes are produced each year, with rice hulls accounting for a third of the total and sawmill, coconut, logging, rubber, oil palm wastes and bagasse comprising the remainder (Exhibit 13). If these wastes could be utilized, an estimated 1.5 million tons of charcoal and 0.9 million tons of pyrolytic oils could be produced. These would amount to approximately 15% of Indonesia's total energy consumption. By thus saving this quantity of energy, scarce foreign exchange used to import heavily-subsidized kerosene could be conserved, a dangerous trend toward deforestation lessened, and substantial new employment opportunities could be created.

Major wastes from the forests in Indonesia are of two types, logging wastes and sawmill wastes. Logging wastes are composed of branches, twigs, and tops which together constitute about 30% of the cut-down part of a tree. About 50% of these logging wastes are being processed as wood chips for papermaking. The balance is left in the forests, and represents a true waste, as shown in Exhibit 13.

Approximately 50% of each log that goes through a sawmill is wasted. Sawmill wastes are in the forms of off-cuts, edgings and sawdust. About 30% of these wastes are being processed in Indonesia into wood chips for papermaking or used as the base material for wood particleboard production. The balance of 70% is therefore a feed material for pyrolytic conversion.

EXHIBIT 13

AGRICULTURAL AND FORESTRY WASTES IN INDONESIA

	Annual Waste Production (in metric tons)	Estimated Percentage Available
Rice hulls	5.7×10^6	90
Logging wastes	1.4×10^6	50
Sawmill wastes	1.1×10^6	70
Coconut wastes	2.4×10^6	30
Oil palm wastes	1.5×10^6	30
Rubber wastes	1.9×10^6	30
Bagasse	3.1×10^6	10
Total	17.1×10^6	

Pyrolytic conversion, which is the thermal degradation of lignocellulosic materials, is one promising means for converting wastes into higher-value fuels which can be transported, stored, and used more efficiently and economically than the original materials. The products of pyrolysis are a char, an oil and a combustible gas. Once the mass is brought up to temperature by external heating, this process is exothermic but in practice still requires a small addition of heat. In some designs, this can be accomplished by external combustion of the off-gas and recycling into the bed.

Carbonization at near ambient temperatures maximizes the relative amount of char and produces a moderate amount of oil, which are both storable and easily transported and thus are of greatest interest. Materials problems are also simplified at low temperatures, making the process more appropriate for rural applications.

Technology for low-temperature pyrolysis is well advanced with at least six different retort designs known, one being widely used over the past 50 years for production of charcoal and liquid by-products. One of the latest versions, adapted to developing countries, is the design of Georgia Institute of Technology's Engineering Experiment Station. Under a grant contract with the U.S. Agency for International Development, Georgia Tech has developed several alternative designs, which have the advantage of portability. This is important because of the logistics problem of collecting raw materials on a seasonal basis from widely scattered locations. The pyrolytic conversion unit design is the same in all cases, but differences exist in the off-gas system and in the presence or absence of a drier, as when solar drying is to be employed. A batch drier is illustrated

in Exhibit 14. In a more advanced version, the cyclone scrubber and condenser are integrated and a pumping ejector (rather than a mechanical blower) is proposed.

Exhibit 15 lists the positive and negative aspects of this process. In fairness, each appropriate technology project should be subjected to this kind of analysis, to supplement an engineering economics or feasibility study. The practical problem of logistics can be met either by establishing the pyrolytic unit at a rice mill site (for example), or by making the plant portable. If necessary to transport wastes to the plant, high water content will add to costs. On the other hand, expensive boilers are normally required to burn high-moisture waste materials, whereas this pyrolytic process (once initiated) can accept a wide range of available waste materials.

On balance, the advantages of this process appear to outweigh disadvantages by a substantial margin. Based on local fabrication in Indonesia, operation 150 days per year (3 shifts) and 1974 costs, Georgia Tech has estimated capital costs between $2,500 and $3,500 and has estimated return on investment in the 15% to 19% range.

EXHIBIT 14

ONE-TON-PER-DAY PYROLYTIC CONVERTOR FOR INDONESIA - MODEL 1

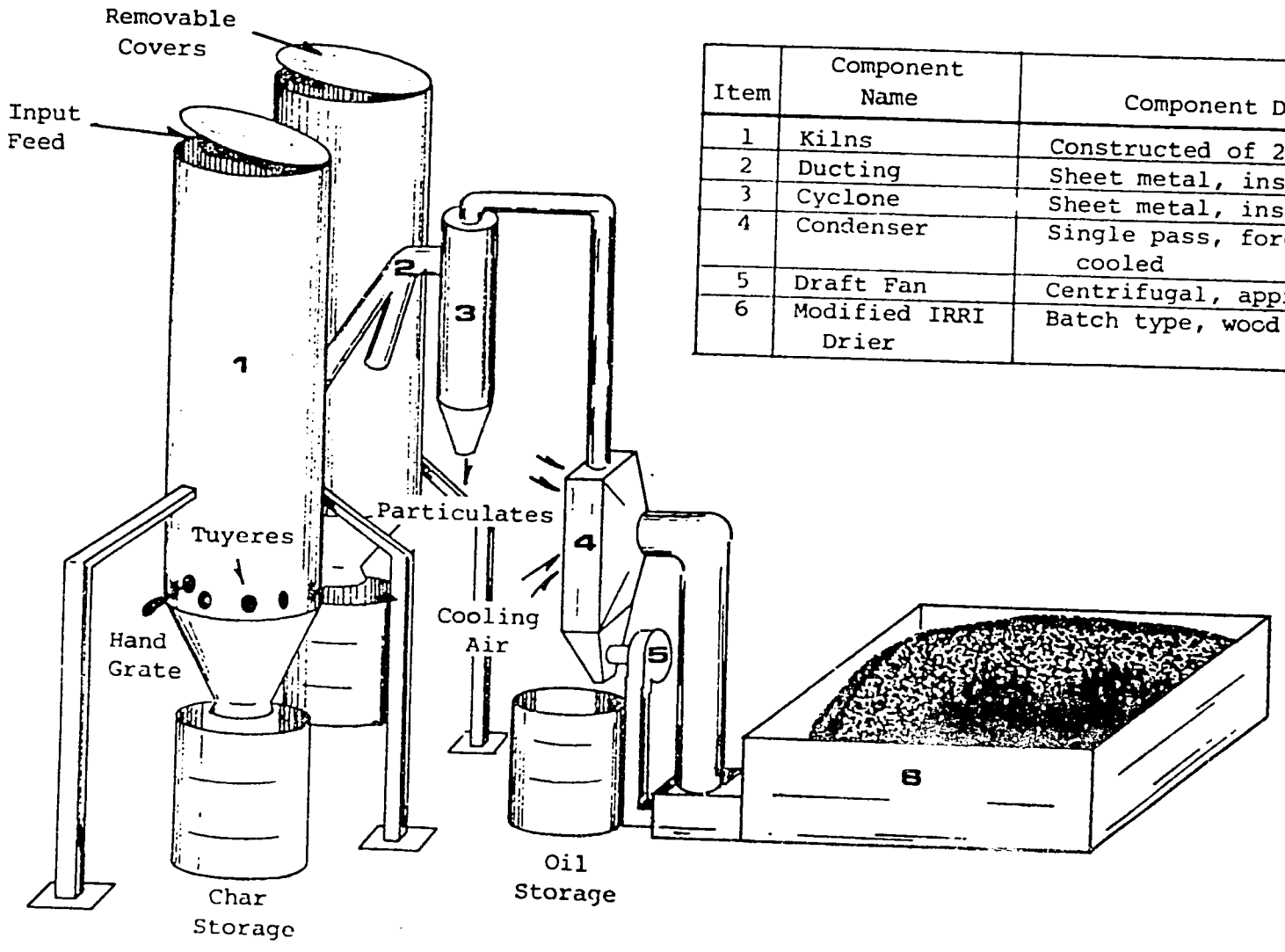

Item	Component Name	Component Description
1	Kilns	Constructed of 200-liter oil drums
2	Ducting	Sheet metal, insulated
3	Cyclone	Sheet metal, insulated
4	Condenser	Single pass, forced convection cooled
5	Draft Fan	Centrifugal, approximately 20 cfm
6	Modified IRRI Drier	Batch type, wood construction

EXHIBIT 15

ANALYSIS OF PYROLYTIC CONVERSION
OF AGRICULTURAL AND FORESTRY WASTES
(Indonesia)

Advantages	Disadvantages
1. Help alleviate serious deforestation problem	1. Collection problem (widely scattered)
2. Prolongs oil reserves	2. Water content adds to transportation costs
3. Labor-intensive process	3. Seasonal production (discontinuous source of supply)
4. Renewable energy source	4. Pyrolytic oil must compete with diesel oil and kerosene (subsidized).
5. Eliminates nuisance of wastes	
6. Ecologically "clean" method (no hazards)	
7. Reduces atmospheric pollution a) Rice straw presently burned in fields b) No sulfur contamination	
8. Product Useful a) Char for industrial/metallurgical fuels and home cooking b) Dense dry, high energy fuel c) Pyrolytic oil/charcoal as boiler fuel	

MINI-FERTILIZER GENERATOR FOR FARM USE

The present world nitrogen and phosphate fertilizer industry--with its widely scattered mines, manufacturing plants and market areas--is based on large scale technology, fossil fuels for nitrogen feedstocks and energy, and long range transport from producers to consumers. By using technology developed at Kettering Research Laboratories near Dayton, Ohio, subsistence-level farmers in developing countries may be able to manufacture modest amounts of fertilizer based on small, low quality phosphate and limestone deposits and alternate energy sources. This system would, in effect, bypass the world market system in localities too poor to afford world market prices, but possessing the right combination of raw materials, energy sources and agriculture.

Production levels are too low (3 tons nitrogen per year for each 3 KW module) and energy costs too high for general application in developed countries. However, where fertilizers are presently unavailable in developing countries by reason of remoteness and high cost and where alternative energy resources are available (Nepal is a good example) the Kettering device appears to meet well the criteria for Appropriate Technology (Exhibit 2). In recent months, a capability for phosphate generation has been added which further expands the applicability of this technology.

The nitrogen fertilizer generator system is shown schematically in Exhibit 16. It consumes only air, water and electrical energy in the production of fixed nitrogen fertilizer. The principal

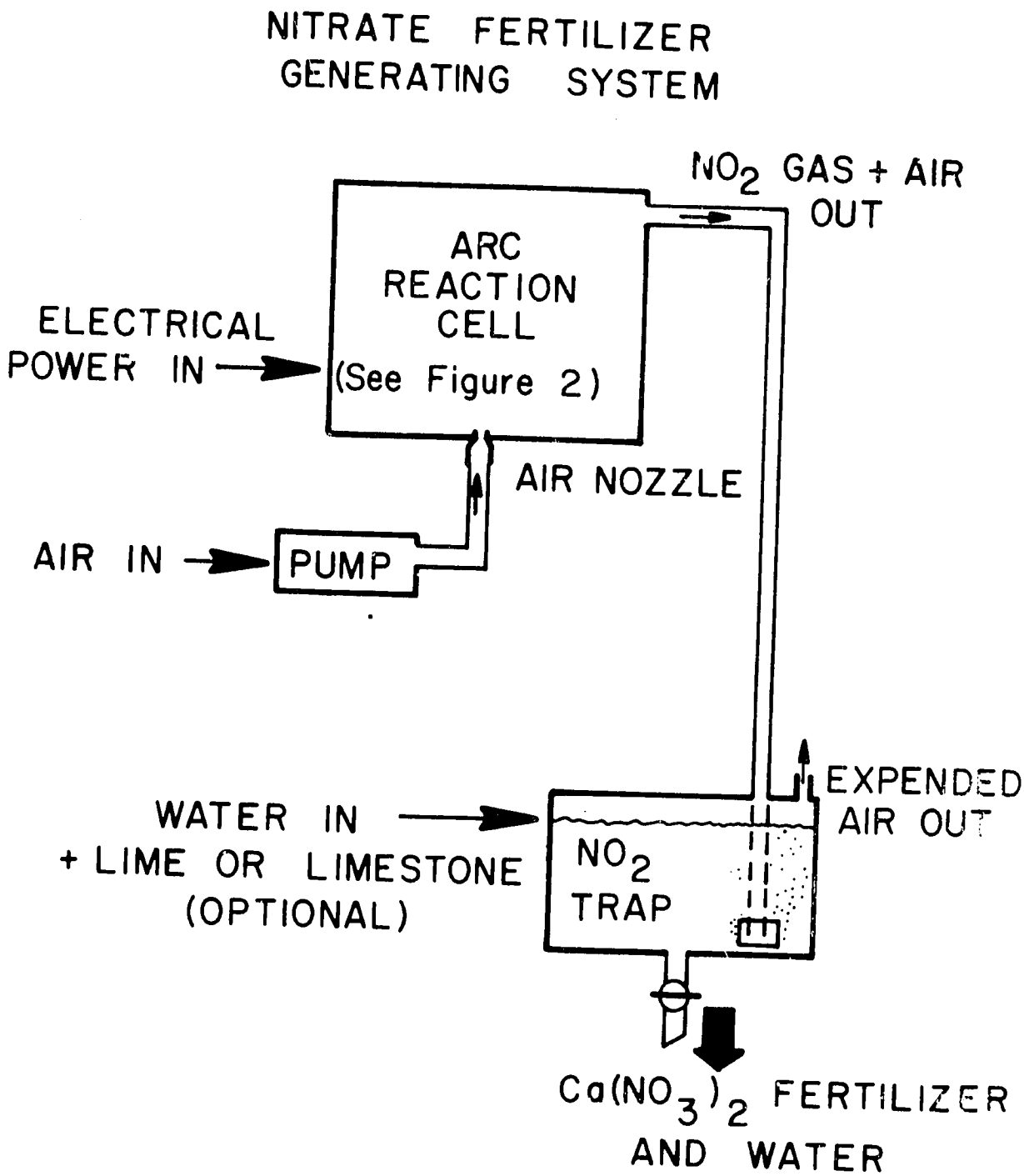

EXHIBIT 16

A flow diagram of the Kettering Nitrogen Fertilizer Generator System intended for on-site farm use. The process consumes only air, water and electrical energy in the production of nitrogen fertilizer.

product is nitric oxide (NO), which is air oxidized to nitrogen dioxide (NO_2) and its dimer, nitrogen tetra-oxide (N_2O_4). Energy requirements for the formation of nitrogen oxides are given by one or more of the reactions below:

$$N_2 + O_2 \rightarrow 2NO, \qquad \Delta G = +41.4 \text{ Kcal/mol}$$

$$2NO + O_2 \rightarrow 2NO_2, \qquad \Delta G = -16.6 \text{ Kcal/mol}$$

$$2NO_2 \rightarrow N_2O_4, \qquad \Delta G \cong 0$$

The combined reactions may be written as:

$$N_2 + 2O_2 \rightarrow 2NO_2 \text{ or } N_2O_4 \qquad \Delta G = +24.8 \text{ Kcal/mol}$$

Nitrogen dioxide or nitrogen tetra-oxide formed is readily trapped in water to form nitric (HNO_3) and nitrous (HNO_2) acids. Addition of lime or limestone to the water leads principally to formation of calcium nitrate fertilizer. Recent experiments have shown that phosphate rock can also be solubilized by this acid, although recirculation will almost certainly be necessary to build-up concentrations to appropriate fertilizer grades.

As illustrated by Exhibit 17, the reaction cell consists of a 6 cm diameter pipe as one electrode, and a concentric second electrode at one end of the pipe. Tangential air inlet ports at the bottom of the pipe cause the arc to climb in a swirling path creating a vortex-shaped arc. During operation a stable "core" of 2000°C+ plasma produces up to 18 grams of fixed nitrogen per kilowatt-hour, corresponding to approximately one (1) metric ton of fixed nitrogen per 50,000 kilowatt-hours. A picture of a typical cell, with high voltage transformer and air pump are shown in Exhibit 18. This equipment can be transported by animal or by

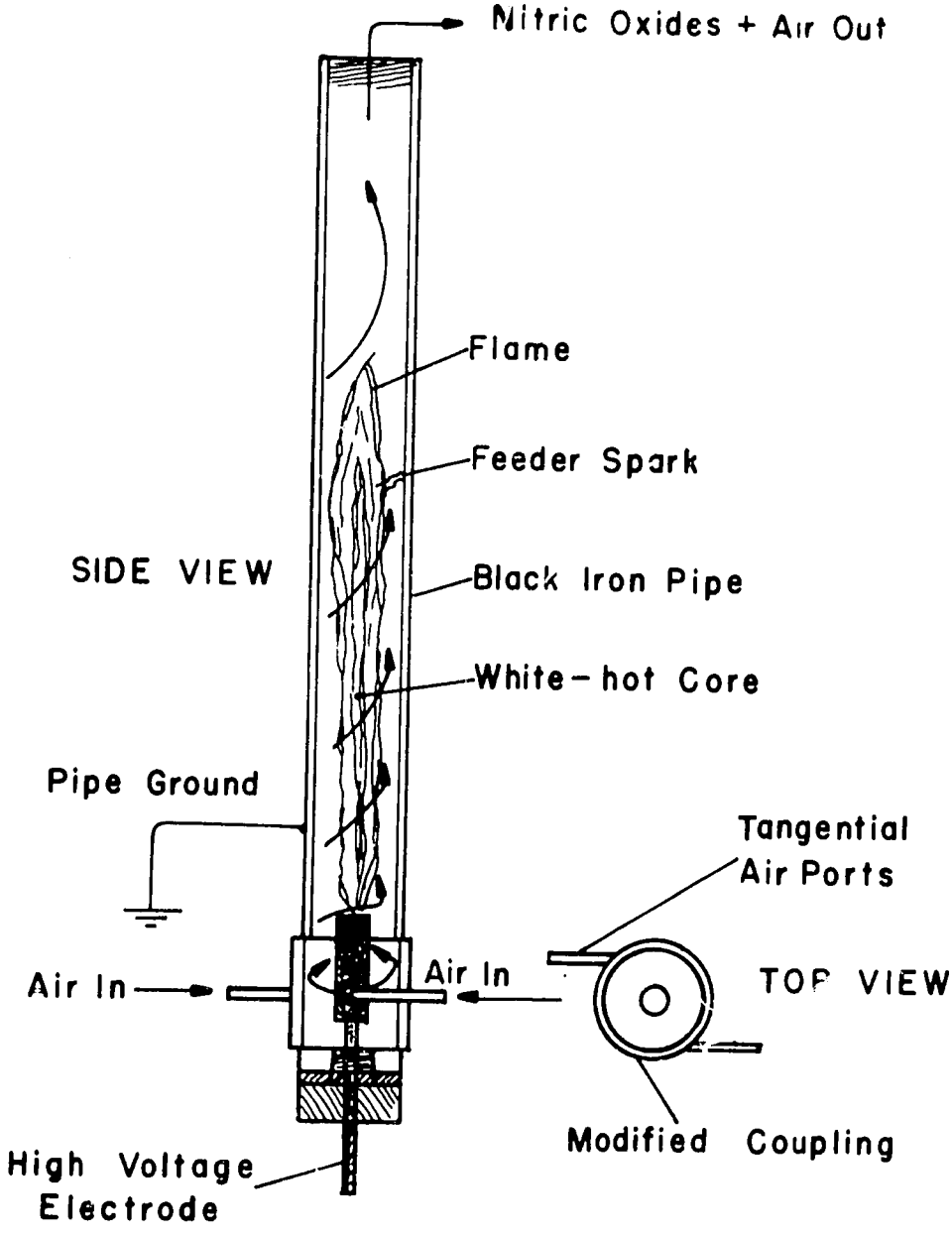

NITROGEN FERTILIZER
GENERATOR REACTION CELL

EXHIBIT 17

One form of the reaction cell used in the Kettering Nitrogen Fertilizer Generator System uses a vortex arc cell suitable for farm installation. Not shown in the diagram are external water cooling jackets.

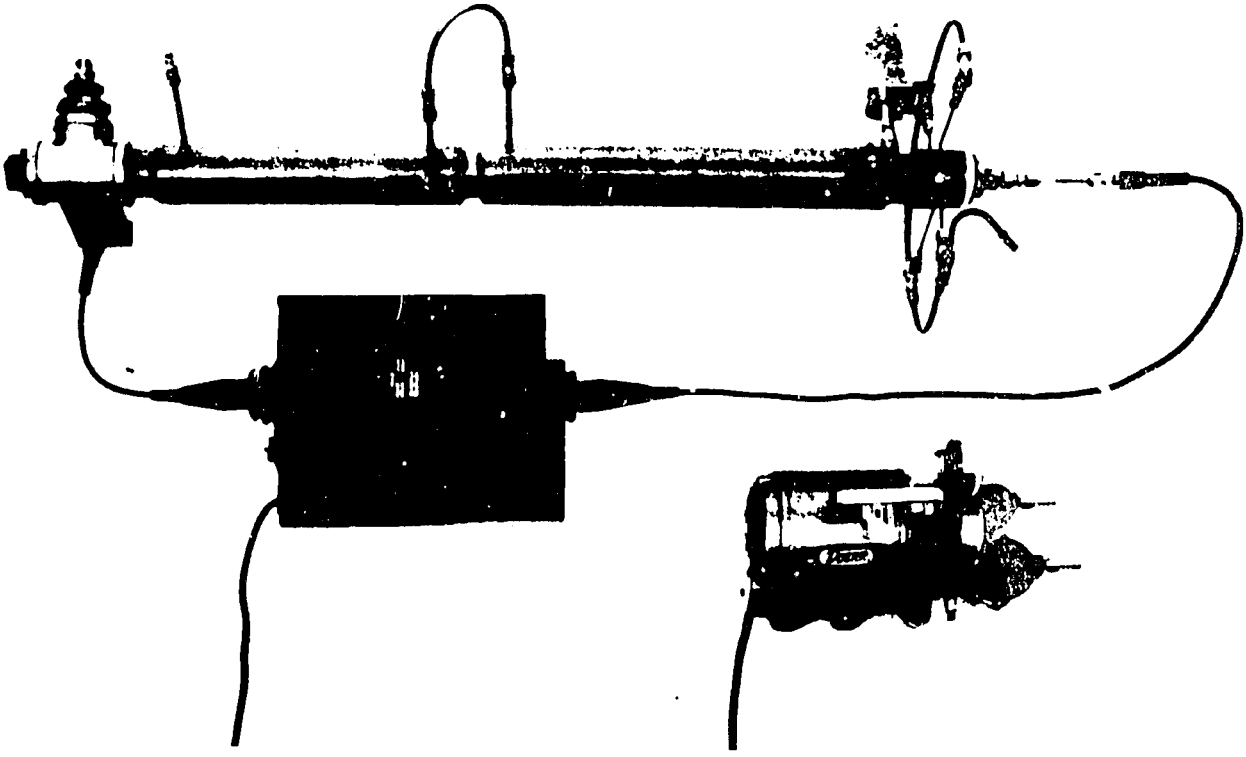

EXHIBIT 18

Kettering Nitrogen Fertilizer Generator photograph showing major components and interconnections. The reaction cell, with water cooling jackets, is about 1 meter long and 8 centimeters in diameter for a 3 kilowatt installation. Also visible in the photograph are the electrical transformer, air pump and calcium carbonate (limestone) column for fertilizer product absorption.

back-packing, and this feature makes the system of particular interest in remote areas of, for example, the Andes and Himalayas.

A critical consideration is electrical energy input. This can be from conventional electricity from a national grid or rural electrification project, or from renewable energy sources such as prevailing winds, hydropower or solar energy. At the present time, this trailer-mounted prototype unit is being hooked up to the 25-KW Massachusetts Institute of Technology (Lincoln Laboratories) solar array at the University of Nebraska experimental farm (Exhibit 19). It is planned to produce enough fertilizer from the Kettering test unit to fertilize one-half of this 60 acre "energy independent" corn farm, using three-3KW modules, or a total of 9 KW. Following these tests, similar experiments at the University of Hawaii East-West Center using wind power (Exhibit 20) and hydro-power at the University of Nevada are scheduled.

In a full-scale farm system, Kettering researchers have proposed that the nitrate (and/or phosphate) fertilizer could be stored in water solution for spraying on the fields as needed, or applied directly in an irrigion system as fast as generated (Exhibit 21).

Referring to the cost study of Exhibit 22, it is apparent that several interrelated factors will determine the economic feasibility of a mini-fertilizer generator system for a specific site. Considering only the case for nitrogen generation, the four main factors are: 1) the cost of nitrogen fertilizer delivered to the farm site of interest; 2) the electrical energy cost needed to power the

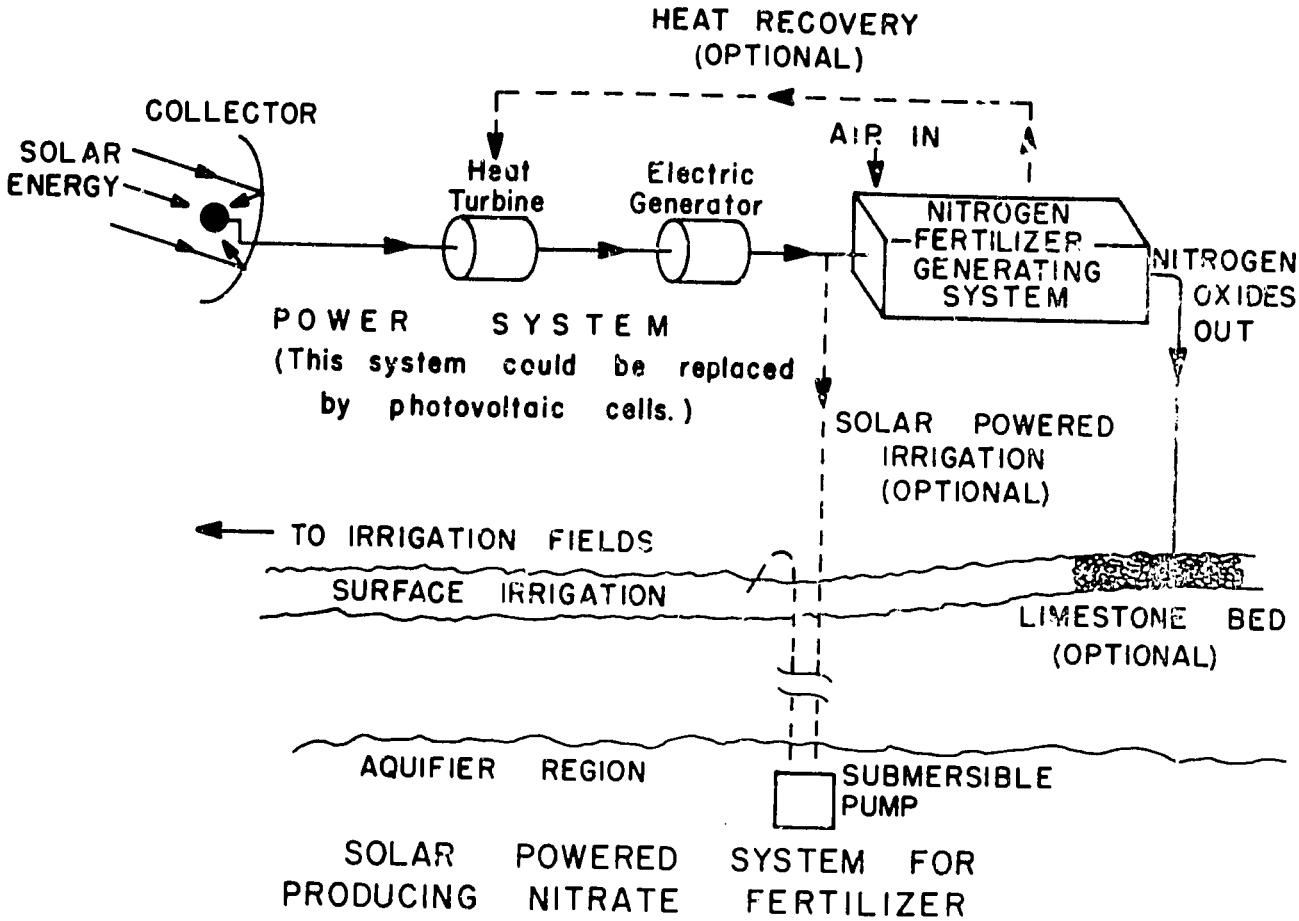

EXHIBIT 19

With significant reduction in cost of solar to electrical converters, a solar-powered system for producing nitrogen fertilizer could find the widest applications. A solar powered nitrogen fertilizer generator system would be most practical when combined with a solar-powered irrigation system.

Wind Powered Fertilizer Production and Crop Drying Unit

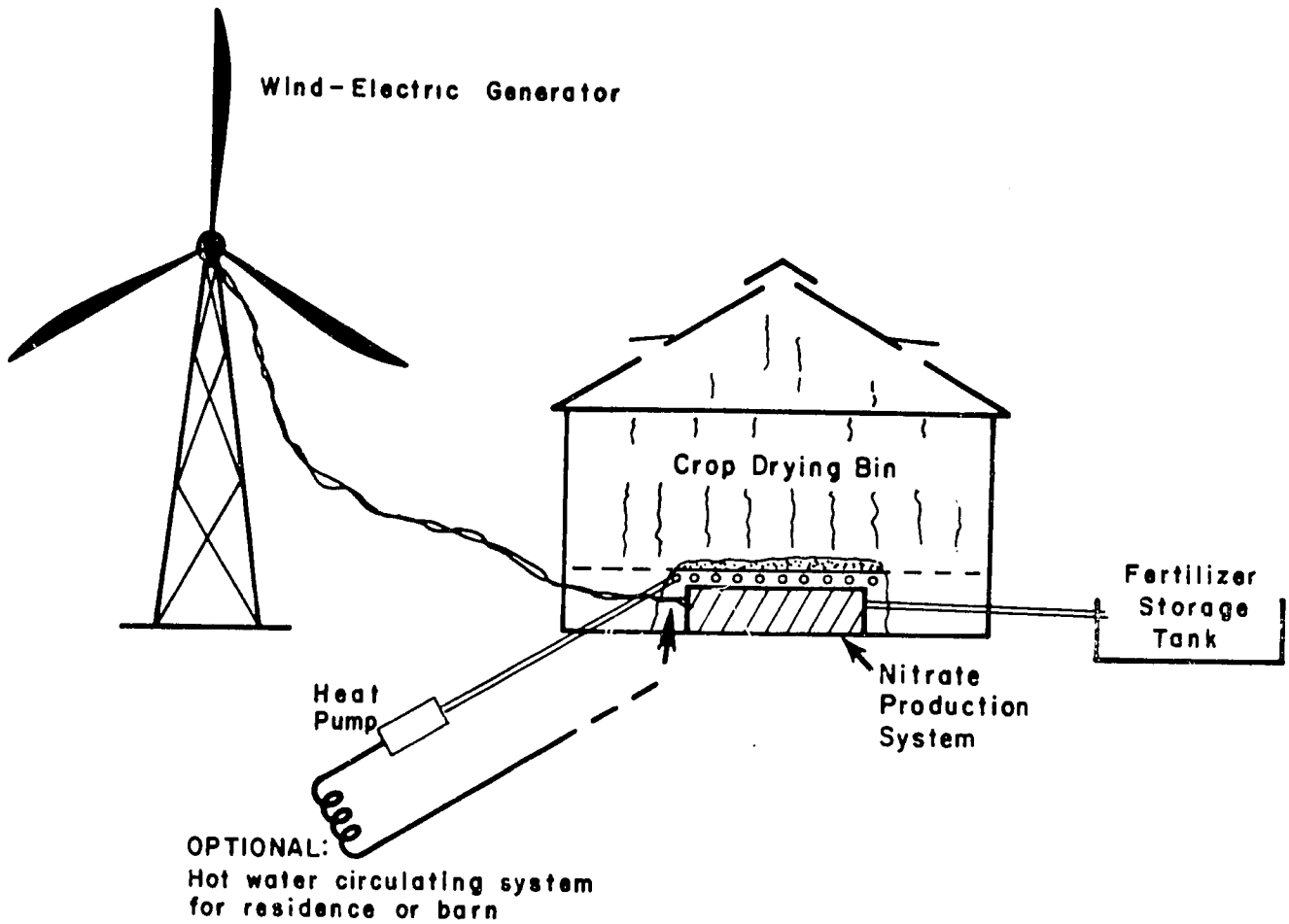

EXHIBIT 20

In moderate to high wind speed areas, wind powered systems for production of nitrogen fertilizer on the farm could find wide use - particularly if the waste heat generated in the process can be used to advantage for applications such as crop drying, space heating, water heating, etc.

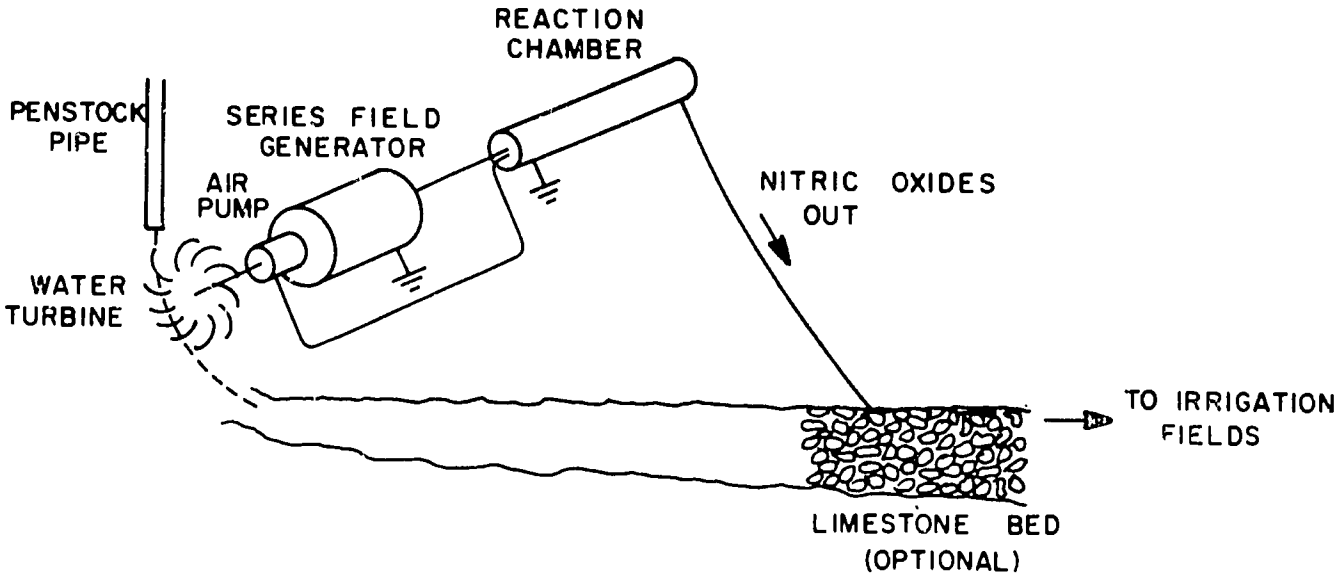

WATER POWERED SYSTEM FOR PRODUCING NITRATE FERTILIZER

EXHIBIT 21

As shown in EXH. 22 the overall economics for a water powered system to produce nitrogen fertilizer appear attractive for farm sites where water power exists and irrigation is used.

EXHIBIT 22

PROJECTED COST COMPARISON

OF

DIFFERENT TYPES OF ELECTRICAL POWER SOURCES TO POWER A NITRATE FERTILIZER GENERATOR

TYPE OF SYSTEM POWER	INSTALLED COST OF 3KW SYSTEM	ANNUAL AMORTIZED COST INCLUDING OPERATING COST[1]	KWH PER YEAR AVAILABLE	CONDITIONS	TONS $Ca(NO_3)_2$[2] PER YEAR	PROJECTED COST PER TON $Ca(NO_3)_2$[3] WITHOUT HEAT RECOVERY	USING WASTE HEAT[4]
Electric Utility Power	$ 900.	$ 524.	25,620	Electrical Energy at 1.5 cents per KWH assumed.	3.00	$ 174.	$ 132.
Hydro-electric (on-site installation)	$ 3,900.	$ 540.	25,620	High-head, small-scale water fall site assumed.	3.00	$ 180.	$ 138.
Wind Electric (10 meter diam.)	$10,900.	$1,140.	42,800	Based on 22 Km (average) wind speed.	5.01	$ 227.	$ 185.
Wind Electric (5 meter diam.)	$ 5,900.	$ 740.	10,700	Based on 22 Km (average) wind speed.	1.25	$ 592.	$ 550.
Solar Turbine	$ 6,000.	$ 750.	9,000(electrical) 108,000(thermal)	Based on 3000 hrs. solar insolation at 0.7KW/Sq. meter.	1.05	$ 714.	$ 202.
Solar Photovoltaic (concentrating Collector)	$ 6,900.	$ 840.	9,000(electrical) 90,000(thermal)	Solar insolation as above and $2,000 per KW installed cost.	1.05	$ 802.	$ 373.
Solar Photovoltaic (flat plate)	$30,900.	$3,240	9,000(electrical) 90,000(thermal)	Based on $10,000 per KW installed.	1.05	$3,085.	$2,658.

1 Based on 20 year amortization at 8% interest, plus estimated annual operating costs (1976 U.S. dollars)

2 Based on 8,540 KWH per ton of $Ca(NO_3)_2$ or 50,000 KWH per ton of fixed nitrogen. 1 metric ton = 1000 Kg ≈ 2200 lbs.

3 For cost comparison, present day delivered costs of commercial $Ca(NO_3)_2$ range from $140. to $180. per ton.

4 One-half of total waste heat assumed recoverable at a value of 1 cent per KWH.

nitrogen fertilizer generator; 3) the fertilizer product yield obtainable in converting the electrical energy input into nitrogen fertilizer and 4) the economic savings that can be realized by reclaiming at least part of the waste heat generated in the system. Exhibit 23 attempts to place these factors into graphic form. Two electrical conversion rates are considered: a conversion rate of 50,000 kilowatt hours of input energy per ton of fixed nitrogen (presently accomplished) and a goal conversion rate of 25,000 kilowatt-hours per ton of fixed nitrogen. These data assume that one half of the waste heat of the process can be reclaimed for useful purposes, such as illustrated in Exhibit 20.

As indicated in Exhibit 23, this process can be economically feasible--under present state-of-the-art--where electrical power costs do not exceed 1.5 to 2.5 cents per kilowatt-hour and where the present delivered cost of fertilizer is $300 or more per metric ton of nitrogen content. While these conditions are not common in developing countries, there are instances of nitrogen fertilizer costing in the $800 to $1,000 per ton range on a farm delivered basis. Electrical energy costs in the indicated range are more rare, but worth seeking.

For example, a small hydro-electric powered system appears to be the most economically attractive renewable energy source for this purpose (Exhibit 22). For this type of application dams are not required and a 5 cm. diameter pipe carrying water falling from a head of 120 meters would be adequate to drive a 3 kilowatt turbine.

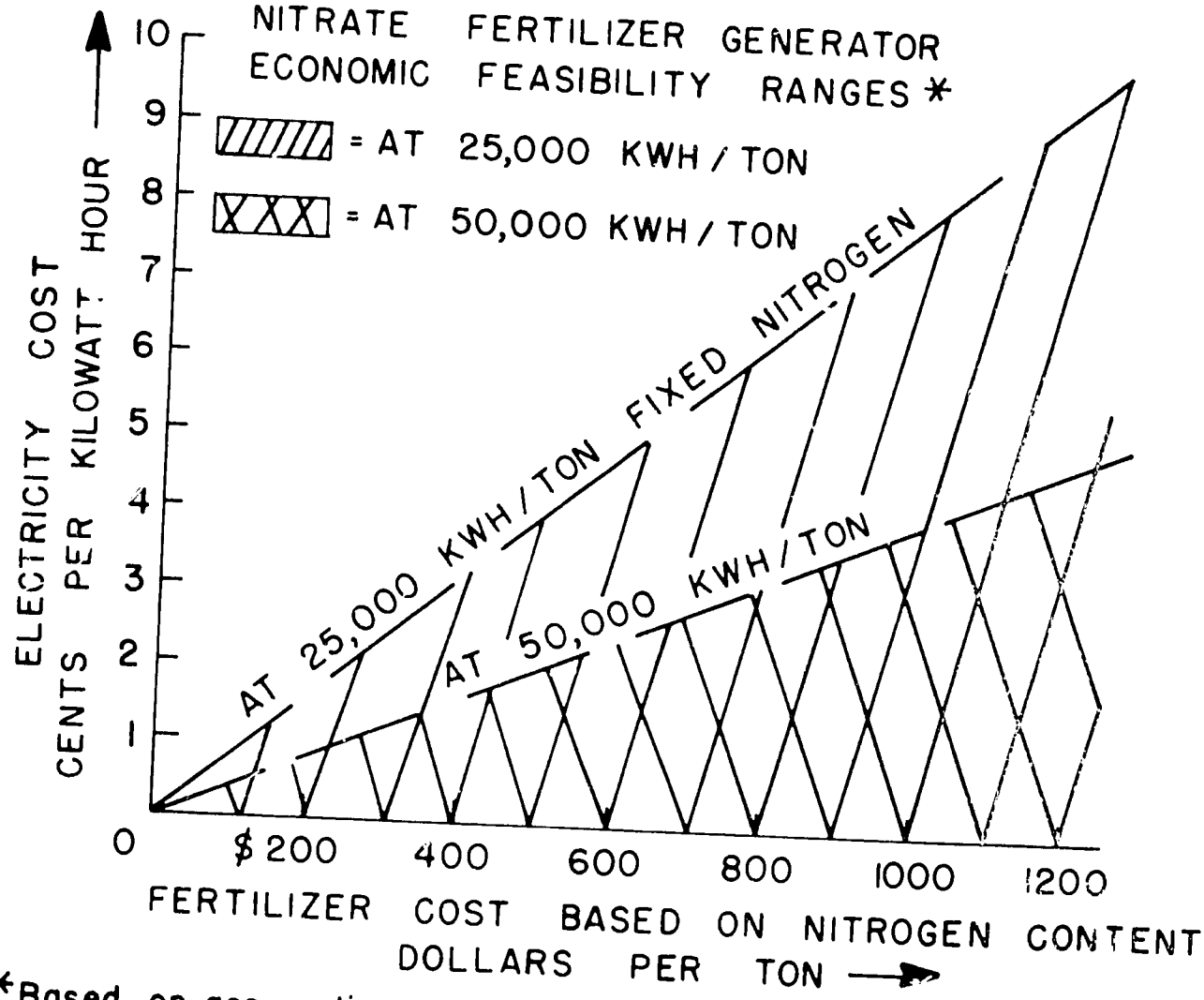

*Based on assumption that one half of "waste" heat of process is reclaimed.

EXHIBIT 23

The economic feasibility for an on-site nitrogen fertilizer generator at a given location is determined by the cost per ton of nitrogen content of fertilizer at that particular site and the electrical energy costs of the system. See text.

Factors which need to be considered for optimum location will be evident, and are summarized in Exhibit 24. Suggestions for appropriate test locations in developing countries are invited by the speaker.

In terms of our definition of Appropriate Technology (Exhibit 2), we may summarize the advantages and disadvantages of the Mini-Fertilizer Generator technology in Exhibit 25. Obviously, a definite need would be filled since nitrogenous fertilizer is essential to all plants save legumes, and phosphate fertilizer is even more universally required. Not only would local raw materials be utilized (limestone is widely available), but low-grade phosphatic ores formerly unusable might be employed. In this case, calcium and magnesium and aluminum impurities which make some phosphate rock unsuited to conventional superphosphate manufacture would become either sources of additional nitrogen fertilizer or otherwise tolerable. Additional advantages of waste heat availability, non-pollution and flexibility in operation (operating whenever power becomes available), are to some extent counterbalanced by low energy efficiency (on the order of 2% to 4%) and some need for attention to safety precautions against high temperature and medium-high voltages.

The fact that this fertilizer generator is not universally applicable is only a challenge to find those applications where it can prove a net benefit.

EXHIBIT 24

CRITERIA FOR OPTIMUM

MINI-FERTILIZER GENERATOR

APPLICATION

1. Isolated location (prohibitive fertilizer costs)
2. Available surplus energy source
3. Limestone
4. Phosphate Rock
5. Proximity of No. 2, 3, 4 to significant agriculture
6. Agricultural extension/research capability

EXHIBIT 25

CRITIQUE OF MINI-FERTILIZER GENERATOR

1. Supplies Critical Commodity
   a) Fertilizers essential to plant growth
   b) Accessible to remote regions

2. Utilizes local raw materials
   a) Air, water, limestone, phosphate rock
   b) Low-grade phosphate rock usable
   c) Not dependent upon declining fossil fuel feedstock (Haher-Bosch).

3. Waste heat available for reclaiming

4. Utilizes renewable energy sources

5. Pollutants absorbed in fertilizer generation

6. Recycling (product concentration) possible

7. Low-maintenance level

8. On-site generation eliminates storage, transport and distribution costs.

1. Minimal employment generation

2. Inefficient energy utilizer (low yield, high energy input)

3. Safety precautions required

4. Not universally applicable
   a) Not intended to be so
   b) "Best fit" sought