BIBLIOGRAPHIC DATA SHEET

1. CONTROL NUMBER: PN-AAK-836

2. SUBJECT CLASSIFICATION (695): AH00-0000-000

3. TITLE AND SUBTITLE (240)
Experimental and agronomic use of nematicides

4. PERSONAL AUTHORS (100)
Taylor, A.L.; Sasser, J.N.

5. CORPORATE AUTHORS (101)
~~International Meloidogyne Project~~
North Carolina State Univ.

6. DOCUMENT DATE (110): 1978

7. NUMBER OF PAGES (120): 20p.

8. ARC NUMBER (170)

9. REFERENCE ORGANIZATION (130): [redacted] N.C. State

10. SUPPLEMENTARY NOTES (500)

11. ABSTRACT (950)

root knot
pest control
fumigation
pesticides ?

12. DESCRIPTORS (920)
agricultural research
agricultural production
developing countries
nematoda

13. PROJECT NUMBER (150)
931 0525 00

14. CONTRACT NO.(140)
AID/tac-1234

15. CONTRA TYPE (14
-

16. TYPE OF DOCUMENT (160)
—

AID 590-7 (10-79)

PN-AAK-836

PEANUTS, TREATED . . . . . UNTREATED

A.L. TAYLOR
CONSULTANT NEMATOLOGIST
and
J.N. SASSER
PRINCIPAL INVESTIGATOR

INTERNATIONAL MELOIDOGYNE PROJECT
IMP
Contract No. AID/ta-c-1234

EXPERIMENTAL AND AGRONOMIC USE OF NEMATICIDES

A. L. TAYLOR, *Consultant Nematologist*
and
J. N. SASSER, *Principal Investigator*

A Cooperative Publication
of
THE DEPARTMENT OF PLANT PATHOLOGY
NORTH CAROLINA STATE UNIVERSITY
and
THE UNITED STATES AGENCY FOR
INTERNATIONAL DEVELOPMENT

RALEIGH, NORTH CAROLINA MAY, 1978

PREFACE

The purpose of this publication is to facilitate and encourage field experiments with nematicides. Nematicides are the easiest and quickest way to control plant-parasitic nematodes. If used for production of crops of moderate to high value per hectare, nematicides are an excellent investment. One dollar used to buy nematicides increases crop value by 4 to 25 dollars or more per hectare.

For the nematologist, nematicides provide a method for demonstrating that nematodes cause crop damage and that nematode control increases yield, often by as much as 25 to 100%. Before nematicides were widely used there were few nematologists; now there are hundreds making a large contribution to the food and fiber supplies of their countries.

Looking back as the authors can after a combined 70 years of research with nematodes, it is possible to see the various steps that were necessary to introduce nematicides to the farmers of the United States. First, it was necessary for research workers to develop methods for use of nematicides and to become skillful in their use. Then by farm demonstrations, it was easy to show farmers that nematicides improved crop growth and increased yields. Farmers soon found that the values of crop yield increases were many times the cost of the nematicide.

It is important to emphasize that farmers were first interested by seeing demonstrations on their own or nearby farms. They were finally convinced by trials on their own farms.

As spin-off from nematicide demonstrations, there was revived interest in other methods of control such as rotation, resistant cultivars and nematode-free planting material.

With cooperators of the International *Meloidogyne* Project providing the knowledge and initiative, this same sequence will be followed in many developing countries.

For information on the availability of
this publication, write to
Dr. J. N. Sasser, Department of Plant Pathology,
North Carolina State University
Raleigh, N.C. 27650, U.S.A.

CONTENTS

1. Nematicides

I. Introduction 1
A. Economics of nematicides 1
B. Soil fumigants 1
C. Non-fumigants and systemics 3
D. Phytotoxicity and specificity 3
E. Effect on nematode populations 3
F. Residues 3

II. Application of nematicides to farm fields 3
A. Overall treatment 3
B. Row treatment 3
C. Spot treatment 3

2. Application equipment and methods

I. Safety precautions 6
II. Calculation of application rates 6
III. Improvised equipment 6

A. For liquid nematicides 6
B. For granular nematicides 8

IV. Commercial applicators 10
A. Hand applicators 10
B. Tractor applicators 10

V. Application of methyl bromide to seedbeds and potting soil 12
A. Materials 12
B. Procedure 12

VI. Control of *Meloidogyne* species in planting material by nematicides 14

3. Experiments with nematicides

I. Introduction 15
II. Materials and methods 15
A. Materials 15
B. Methods 15

References 19

Appendix I 20

1.

Nematicides

I. Introduction

Nematicides* are chemicals used for control of plant-parasitic nematodes. Widespread use started about 1950 and has increased to a business estimated at nearly $100,000,000 per year. Table 1 includes nematicides which are widely available.

Farmers use nematicides to increase crop values per hectare, that is, to increase profits. Increase in crop value may be due simply to increased yield, but usually there is also an increase in quality, and a larger percentage of the produce can be sold (Fig. 1).

The principal use of nematicides is for control of nematode populations in soil before planting annual crops. Application of nematicides to soil is called "treating the soil" or "soil treatment," and "treated" soil is often compared with "untreated" soil. Some nematicides are also used to control nematodes infecting planting material. Others are used for control of nematodes of established plantings of perennials in orchards, vineyards and citrus groves. Nematodes are killed by application of nematicides, though not always immediately. The effect on the crop is similar if they are only made non-infective.

A. Economics of Nematicides

Nematicides are relatively expensive, and application requires labor and specialized equipment. Very early in the development of nematicide markets, it became evident that it was not possible to kill all the nematodes in farm soil and that attempts to do so by increasing the application rate per hectare were not efficient. Recommended application rates are now calculated to produce the largest number of dollars increase in crop value (quantity and quality) for each dollar invested in nematicides and their application. When growers use nematicides, they expect an increase in crop value of at least three or four times the investment.

B. Soil Fumigants

The older nematicides are liquids which are injected beneath the soil surface. They evaporate to produce fumes which kill nematodes and are called "soil fumigants." Fumes from soil fumigants diffuse through the soil, are dissolved in soil water, and enter nematode bodies through the cuticle.

*Also spelled nematocide. Nemacide is a synonym which is seldom used.

Fig. 1. The carrot on the left is marketable. The two root-knot infected carrots on the right can not be sold.

Table 1. Nematicides available on world markets.

Common Name	Registered Trade Name Manufacturer	Chemical name	Formulation and Classification
Aldicarb	(TEMIK) Union Carbide Corp.	2-methyl-2-(methylthio) propionaldehyde 0-(methylcarbamoyl) oxime	Granular nematicide/insecticide
Aldoxycarb	(STANDAK) Union Carbide Corp.	2-methyl-2-(methylsulfonyl) propanal 0-[(methylamino) carbonyl] oxime	75% wettable powder nematicide/insecticide
Carbofuran	(FURADAN) FMC Corporation	2,3-dihydro-2,2-dimethyl-7-benzofuranyl methycarbamate	Granular and flowable nematicide/insecticide
Chloropicrin	Great Lakes Chem. Corp.	trichloronitromethane	Liquid fumigant nematicide/insecticide
DBCP*	(FUMAZONE) Dow Chem. Co. (NEMAGON) Shell Dev. Co.	1,2-dibromo-3-chloropropane	Emulsifiable and non-emulsifiable liquid nematicide
1,3-D	(TELONE) Dow Chem. Co.	1,3-dichloropropene and related hydrocarbons	Liquid fumigant nematicide
DD Mixture	(DD) Shell Dev. Co. (VIDDEN-D) Dow Chem. Co.	1,3-dichloropropene and 1,2-dichloropropane and related hydrocarbons	Liquid fumigant nematicide
EDB	(SOILBROME) Great Lakes Chemical	ethylene dibromide	Liquid fumigant nematicide
Ethoprop	(MOCAP) Mobil Chem. Co.	0-ethyl S,S-dipropyl phosphorodithioate	Granular or emulsifiable liquid nematicide/insecticide
Fenamiphos	(NEMACUR) Mobay Chem. Corp.	ethyl 4-(methylthio)-m-tolyl isoprophyl-phosphoramidate	Granular or emulsifiable liquid nematicide
Fensulfothion	(DASANIT) Mobay Chem. Corp.	0,0-diethyl 0-[p-(methylsulfinyl) phenyl] phosphorothioate	Granular nematicide
MBr	(DOWFUME MC-2) Dow Chem. Co. (BROM-O-GAS) Great Lakes Chemical	methyl bromide	Gas fumigant nematicide
Oxamyl	(VYDATE) E. I. duPont de Nemours and Co.	methyl-N',N'-dimethyl-N-[(methylcar-bamoyl)oxy]-1-thioxamidate	Granular or water-soluble liquid nematicide/insecticide

* DBCP has recently (1977) been removed from the market and manufacture discontinued. This action was taken because some workers in formulating plants were found to have abnormally low sperm counts. Furthermore, recent studies by the U. S. Environmental Protection Agency indicate that there is a positive correlation between depressed sperm counts and length of exposure of field workers (EPA, 1978, Spermatogenesis in agricultural workers potentially exposed to DBCP. Technical Services Division Office of Pesticide Programs, EPA.)

Addresses in the United States of Manufacturers or Suppliers of Nematicides*

Manufacturers or Suppliers	Addresses
Dow Chemical Co.	Agricultural Dept., P. O. Box 1706, Midland, MI 48604
E. I. duPont de Nemours & Co.	Biochemical Dept., 1007 Market Street, Wilmington, DE 19898
FMC Corporation	Agricultural Chemicals Group, 2000 Market Street, Philadelphia, PA 19103
Great Lakes Chemical Corp.	Agr. Chem. Res. and Dev., P. O. Box 2200, West Lafayette, IN 47906
Mobay Chemical Corporation	Chemagro Agr. Div., P. O. Box 4913, Kansas City, MO 64120
Mobil Chemical Co.	P. O. Box 26683, Richmond, VA 23261
Shell Chemical Co.	Agricultural Chemicals Division, One Shell Plaza, Box 2463, Houston, TX 77001
Union Carbide Corp.	Agricultural Products Division, P. O. Box 17610, Jacksonville, FL 32216

* Foreign addresses given in Appendix 1.

C. Non-fumigants and Systemics

Newer nematicides are water soluble and are called "non-fumigant" nematicides.* Non-fumigant nematicides are distributed through the soil by percolation of water and also enter nematode bodies through the cuticle.

The newest types of nematicides are systemic. They can be taken up by plants through the roots after application to the soil; or through foliage after spray application, then translocated to kill nematodes feeding on the roots. Presumably they are taken up by nematodes in feeding, but might also enter through nematode cuticle in contact with plant tissue.

D. Phytotoxicity and Specificity

Some nematicides are phytotoxic when applied to the soil, and decompose into non-toxic compounds in a few days or weeks. These are applied before planting (preplanting). Others are not toxic and can be applied at planting time or after planting (postplanting). A few are especially phytotoxic to certain crop plants, and many are recommended for use on only a limited number of crops.

Nematicides are not highly specific. Nearly all will control most species of plant-parasitic nematodes in soil, but some are reported to be more effective against certain genera, such as cyst nematodes of the genus *Heterodera*. *Meloidogyne* species are killed by most nematicides.

E. Effect on Nematode Populations

In farm fields, application of nematicides is followed by a decrease of infectivity of nematodes in the soil. Since the decrease is not necessarily correlated with the number of living *Meloidogyne* larvae or other nematodes in the soil, it is best measured by comparative infection of indicator plants planted in treated and untreated soil 2 or 3 weeks after application of the nematicide.

Depending on soil temperature, the *Meloidogyne* larval population will start to increase when eggs produced by the first nematodes to infect the plants hatch 20 to 40 days after planting; from then on, the increase will be rapid for about 60 days (2 or 3 generations), and may continue until after harvest. The best correlations between *Meloidogyne* populations and yield are usually 4 to 7 weeks after planting. *Meloidogyne* species increase rapidly on the healthy root systems of plants in soil treated with nematicides and less rapidly on damaged roots in untreated soil. If the infestation is heavy, roots in untreated soil will have severe damage early in the season, be infected by bacteria and fungi, and have a large amount of decay before harvest.

*Also called "contact" nematicides, but "non-fumigant" is preferable. All nematicides kill by contact.

F. Residues

Most nematicides decompose in the soil, leaving residues which are not toxic to plants nor taken up by plants in sufficient quantity to be objectionable. An exception is bromine which is a considerable part of dibromochloropropane (DBCP) and ethylene dibromide (EDB). Bromine is toxic to onions, garlic, and a few other plant species. It is readily taken up by other plants and is detectable in milk from cows fed on peanut hay from fields where DBCP or EDB has been used.

II. Application of Nematicides to Farm Fields*

A. Overall Treatment

Nematicides may be applied to the whole area of a field with the intention of controlling a large part of the soil population. This is "overall" or "solid" application. For this purpose, soil fumigants are usually injected into the soil at a depth of about 20 cm in parallel lines 30 cm apart. Fumes diffuse from these lines, and control is uniform throughout the top 40 cm of soil.

Liquid non-fumigant nematicides may be diluted and sprayed uniformly over the surface.

Granular non-fumigant nematicides are distributed uniformly over the soil surface. Efficiency of non-fumigant nematicides is increased if they are mixed with the top 10 to 20 cm of soil.

B. Row Treatment

If a crop is to be planted in rows spaced 60 cm or more apart, "row" treatment may be used. Usually one or two lines of fumigant nematicide or a band of non-fumigant nematicide about 25 to 30 cm wide is applied for each row. The area between rows is left untreated. Only a small proportion of larvae in untreated areas migrate to infect germinating seedlings or transplants in the early stages of growth when they are most vulnerable. By the time the roots have grown out of the treated area, the plants are large enough to escape serious damage. Many vegetable and field crops are treated by the "row" method. It requires one-fourth to one-half the amount of nematicide needed per hectare, reduces labor and cost of application. and is often the most efficient way of using nematicides.

For planting fruit or nut trees and vineyards, a strip of soil 1 to 3 meters wide is treated for each row.

C. Spot Treatment

If the crop is widely spaced in the row, a very large saving of nematicide is possible by use of "spot" treatments. A single injection of fumigant nematicide produces a spot of treated soil about 30 to 40 cm in diameter in which one plant can grow. This method is not always the most economical; the nematicide must

*This subject was reviewed by J. M. Good (1969).

be applied by hand applicators (Fig. 2), which requires more labor than row treatment by tractor applicators (Fig. 3).

A variation of spot treatment called "site treatment" can be used for perennials. Treated sites range in size from circles one meter to three meters in diameter according to the size of the tree or vine to be planted.

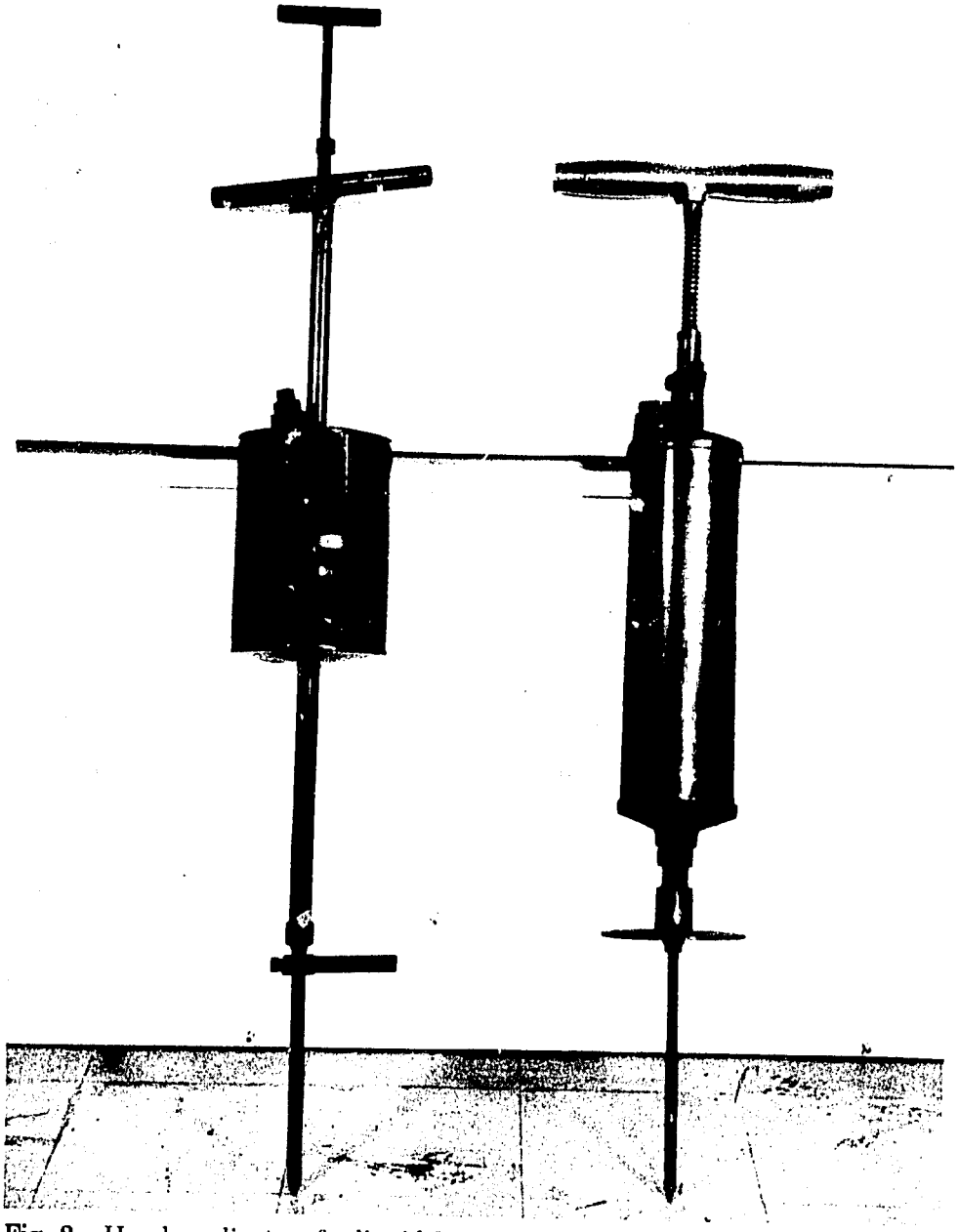

Fig. 2. Hand applicators for liquid fumigant nematicides. Liquid from the tank is measured by a pump with adjustable stroke and delivered beneath the soil surface through holes near the point of the soil spike.

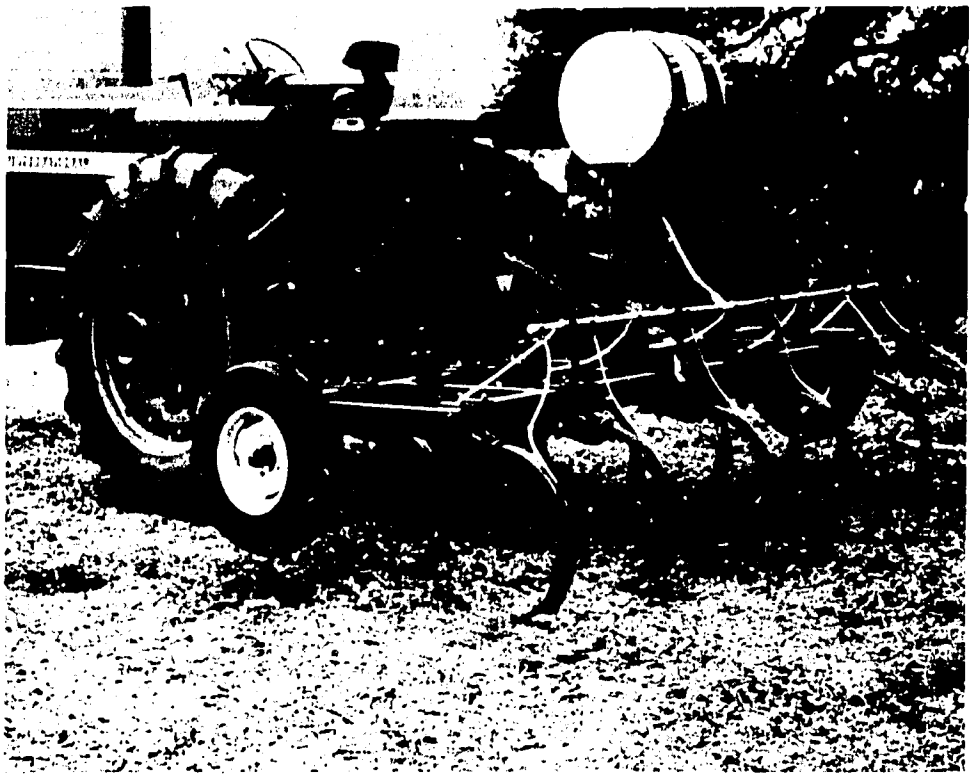

Fig. 3. A tractor applicator for liquid fumigant nematicide. The curved shanks are pulled through the soil at a depth of about 20 cm. Each shank has a small pipe attached. From this a plastic hose runs to a manifold (the horizontal pipe). Nematicide from the tank flows through a regulating apparatus to the manifold and is distributed to the six shanks.

2.
Application Equipment and Methods

I. Safety Precautions

Before using nematicides, read the label on the container. The label tells how much to use, outlines application methods, gives safety precautions, and tells what to do in case of accidents. It also lists crops for which the nematicide may be used and crops for which it should not be used.

Nematicides are poisons and must be handled carefully. Nematicides are poisonous if swallowed. Do not eat, drink or smoke when applying nematicides. Nematicides can be absorbed through the skin, and should never come in contact with bare skin or clothing. If this happens accidentally, wash the chemical off the skin immediately. Take off clothing which comes in contact with nematicides and do not wear it again until it has been carefully cleaned. Fumes of liquid nematicides are poisonous. Liquids should be transferred from one container to another, measured or handled only in the open air with the wind blowing the fumes away from you.

Cans, bottles and drums which have contained nematicides should not be used for any other purpose. They should be washed with water and the water spread over soil, then they should be broken, bent, punctured and made useless before discarding in a safe place.

II. Calculation of Application Rates

Application rates for nematicides are to be found on container labels and in circulars from manufacturers. In the United States, application rates for overall treatments are given in pounds per acre for granular nematicides and in gallons per acre for liquid nematicides. For overall treatments, applications are made in lines spaced 12 inches (30 cm) apart and application rates can be expressed as amount delivered to each line for each 100 feet of travel. For row treatments, it is considered that a strip 12 inches (30 cm) wide is being treated for each row.

The first column of Table 2 gives application rates for liquid nematicides in gallons per acre, and the second column gives corresponding rates in liters per hectare. One gallon per acre is equivalent to 9.353 liters per hectare. Column 3 gives equivalent amounts in milliliters per square meter, and column 4 amounts per 100 meters of row. Column 5 gives application rates for granular nematicides in pounds per acre, and column 6 corresponding rates in kilograms per hectare. Columns 7 and 8 are corresponding amounts in grams per square meter and grams per 100 meters of row. The footnotes give conversion factors.

A. Examples of Calculations

1. The liquid soil fumigant DD Mixture (1,3-dichloropropene, 1,2-dichloropropane and related hydrocarbons) is to be applied overall to experimental plots. Plots are 20 meters long and 20 meters wide and are to be planted to peanuts. Procedure is as follows: Read the label on the nematicide container or the manufacturer's circular to obtain the recommended application rate for peanuts. If this is given as 25 gallons (U.S.) per acre, it is equal to 10 times the rate shown in column 3 of Table 2 for 2.0 gallons per acre plus the rate of 5 gallons per acre, or (10 x 1.87 ml) + 4.68 ml = 18.7 + 4.68 = 23.38 ml per square meter. For the 400 square meters of the plot, 400 x 23.38 ml = 9352 ml will be needed.

A similar calculation can be made with the amounts shown in column 4 of Table 2. Milliliters per 100 meters of row is (10 x 56.10) + 140.30 = 561.0 + 140.3 = 701.3 ml.

2. Granular fenamiphos is to be applied for row treatments to plots 20 meters long with four rows of tomatoes per plot. The application rate of the formulation is given on the container label or in the manufacturer's circulars as 30 pounds per acre. Columns 5 and 6 of Table 2 show that 3.363 kg/hectare is equivalent to 3 lb/acre, and column 8 shows that the equivalent rate is 10.09 grams per 100 meters of row. For 30 lb/ac the rate would be 10 times as much, or 100.9 grams per 100 meters of row. Only 80 meters of row (4 x 20 meters) are to be treated, so only 80.72 grams of nematicide will be needed per plot. This is 20.18 grams per row or 1.009 grams per meter of row.

III. Improvised Equipment

If only a few square meters of soil are to be treated, application equipment can be improvised.

A. For Liquid Nematicides

Equipment needed is a stick to punch holes spaced 30 cm apart in soil, a row marker, a cup, a spoon and a funnel (Fig. 4).

Procedure: Prepare soil for planting, and mark the surface in 30-cm squares with the row marker. Using Table 2, calculate the amount of nematicide needed for each hole, that is, for 900 square centimeters (30 x 30 cm) of soil. If you cannot find a spoon which holds this amount, determine the capacity of a larger spoon. Dilute the nematicide with water if it is emulsifiable or miscible with water, or with kerosene if it is not. The dilution should be just enough so that the spoon

Table 2. Calculating application rates for nematicides.

Application rates for liquid nematicides				Application rates for granular nematicides			
U.S. gallons* per acre	Liters per hectare	Milliliters per square meter	Milliliters per 100 meters of row 30 cm wide	Pounds per acre	Kilograms per hectare	Grams per square meter	Grams per 100 meters of row 30 cm wide
1.0	9.353	0.94	28.06	1.0	1.121	0.11	3.36
2.0	18.706	1.87	56.10	2.0	2.242	0.22	6.73
3.0	28.059	2.81	84.18	3.0	3.363	0.34	10.09
4.0	37.412	3.74	112.24	4.0	4.484	0.45	13.45
5.0	46.765	4.68	140.30	5.0	5.605	0.56	16.81
6.0	56.118	5.61	168.35	6.0	6.726	0.67	20.17
7.0	65.471	6.55	196.41	7.0	7.847	0.78	23.54
8.0	74.824	7.48	224.47	8.0	8.968	0.90	26.90
9.0	84.177	8.42	252.53	9.0	10.089	1.01	30.27
10.0	93.530	9.35	280.59	10.0	11.210	1.12	33.63

* One U.S. gallon = 3785.3 milliliters = 0.832 Imperial (British) gallons.
One meter = 3.281 feet = 1.094 yards = 39.37 inches.
One hectare = 10,000 sq. meters = 2.471 acres = 11,959.64 sq. yards.
One acre = 43,560 sq. feet = 4840 sq. yards = 4046.9 sq. meters.
One U.S. gallon per acre = 9.353 liters per hectare.
One kilogram = 2.205 pounds.
One pound per acre = 1.121 kg per hectare.

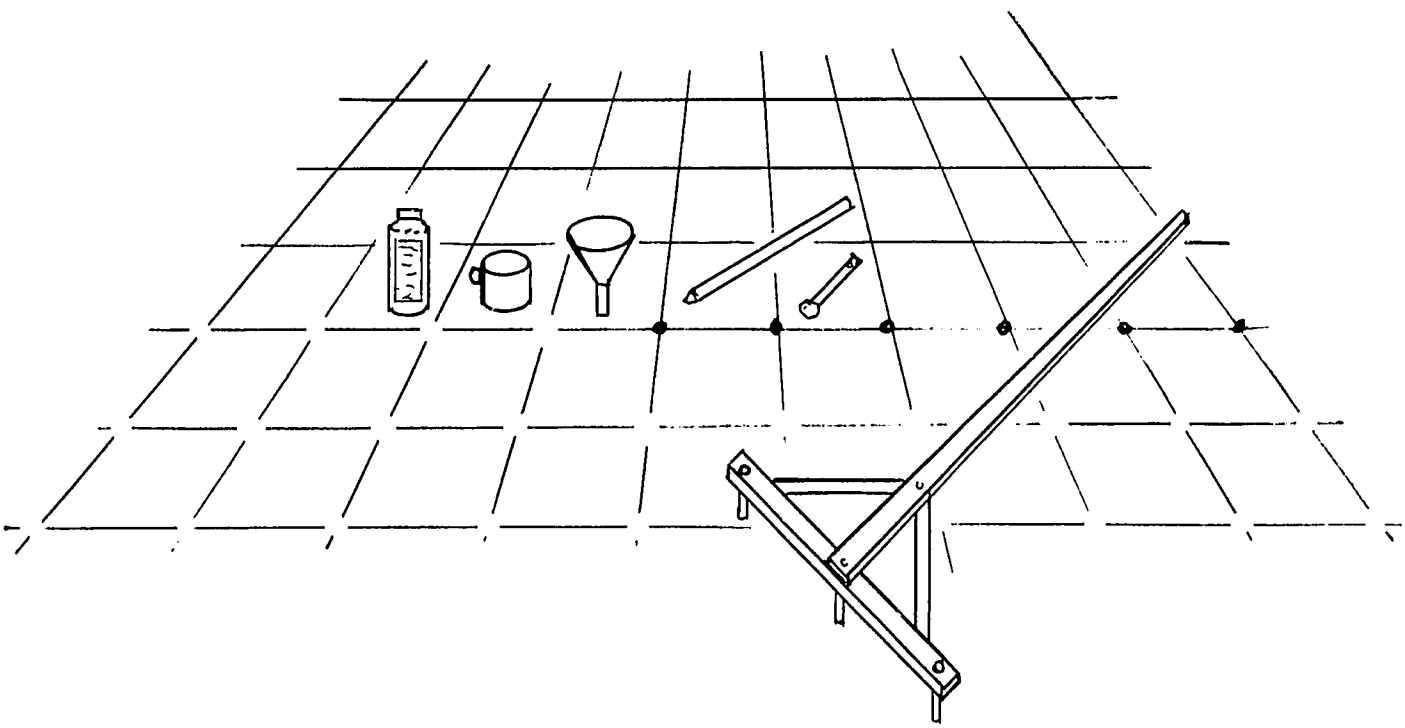

Fig. 4. Fumigant nematicide can be applied to small plots of soil by hand applicators (Fig. 2) or by use of improvised equipment as shown here. In either case, the soil is prepared for planting, then marked at 30-cm intervals by use of a row marker. A sharpened stick is used to make holes 15- to 20-cm deep at intersections of the lines, a funnel is inserted and the nematicide measured by dipping from a cup with a spoon. Holes to the right of the funnel are ready for application. Nematicide has been placed in holes to the left and in the foreground, and the holes have been closed by stepping on them.

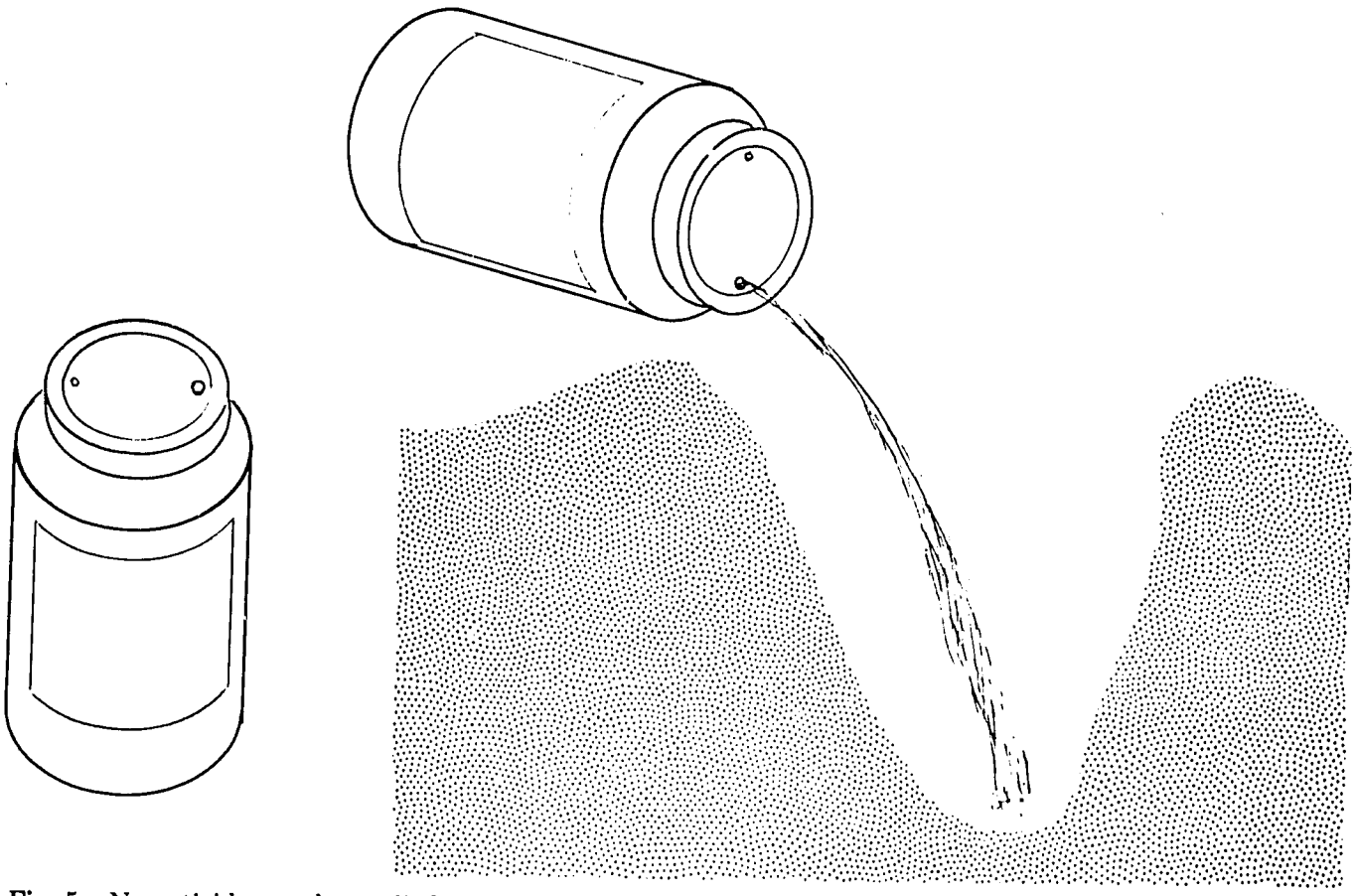

Fig. 5. Nematicides can be applied to small areas of soil by pouring it in furrows at 30-cm intervals. The amount of nematicide is regulated by use of a "glass jar" applicator as explained in the text.

holds a little more than the amount required for one hole.

With the stick, punch holes 20-cm deep at the intersections of the marks. Pour some diluted nematicide into the cup. Place the funnel in a hole, dip up a spoonful of nematicide from the cup and pour it in the funnel. Step on the hole to close it. Proceed until nematicide has been applied to all the plot. Rake soil surface.

For larger plots, dig furrows 15- to 20-cm deep at 30-cm intervals for solid treatment, or one furrow per row for row treatment. Obtain a glass jar with a tight metal cap. Punch two holes in the cap on opposite sides, using a small nail (Fig. 5).

The jar is your applicator. It is adjusted to deliver the correct amount of nematicide as follows: Using Table 2, calculate amount of nematicide needed for length of each furrow. Place this amount of water in the jar. Walk along the furrow pouring water out of one hole. (The other hole is for air.) The objective is to run out of water just as you reach the end of the furrow. Adjust hole size if necessary. Substitute nematicide for the water and make a trial run.

Proceed with the application, covering furrows as soon as the nematicide has been applied.

B. For Granular Nematicides

A fertilizer distributor can be used to apply granular nematicides if it can be adjusted to deliver the correct amount.

For small plots, an applicator for granular nematicides can be improvised by making holes (about 3-mm diameter) near the bottom of a plastic bottle as shown in Figure 6. Start with 3 holes and adjust the application rate as follows:

1) Using column 7 of Table 2, calculate the weight of granules needed for one-half square meter, and place this amount in the bottle.

2) Mark a rectangle 25 x 200 cm (= 0.50 sq. m) on a piece of paper.

3) Shake the bottle to distribute the granules evenly over the rectangle.

4) Try three times and if necessary, make the holes in the bottle larger (or make more holes) until it is easy to distribute the correct amount.

Use strings to mark rows in the field plots. For row treatments, use two strings 30 cm apart centered on the row. For solid treatments, use strings 30 cm apart over the whole plot. Column 8 of Table 2 gives weight of granules per 100 meters of row.

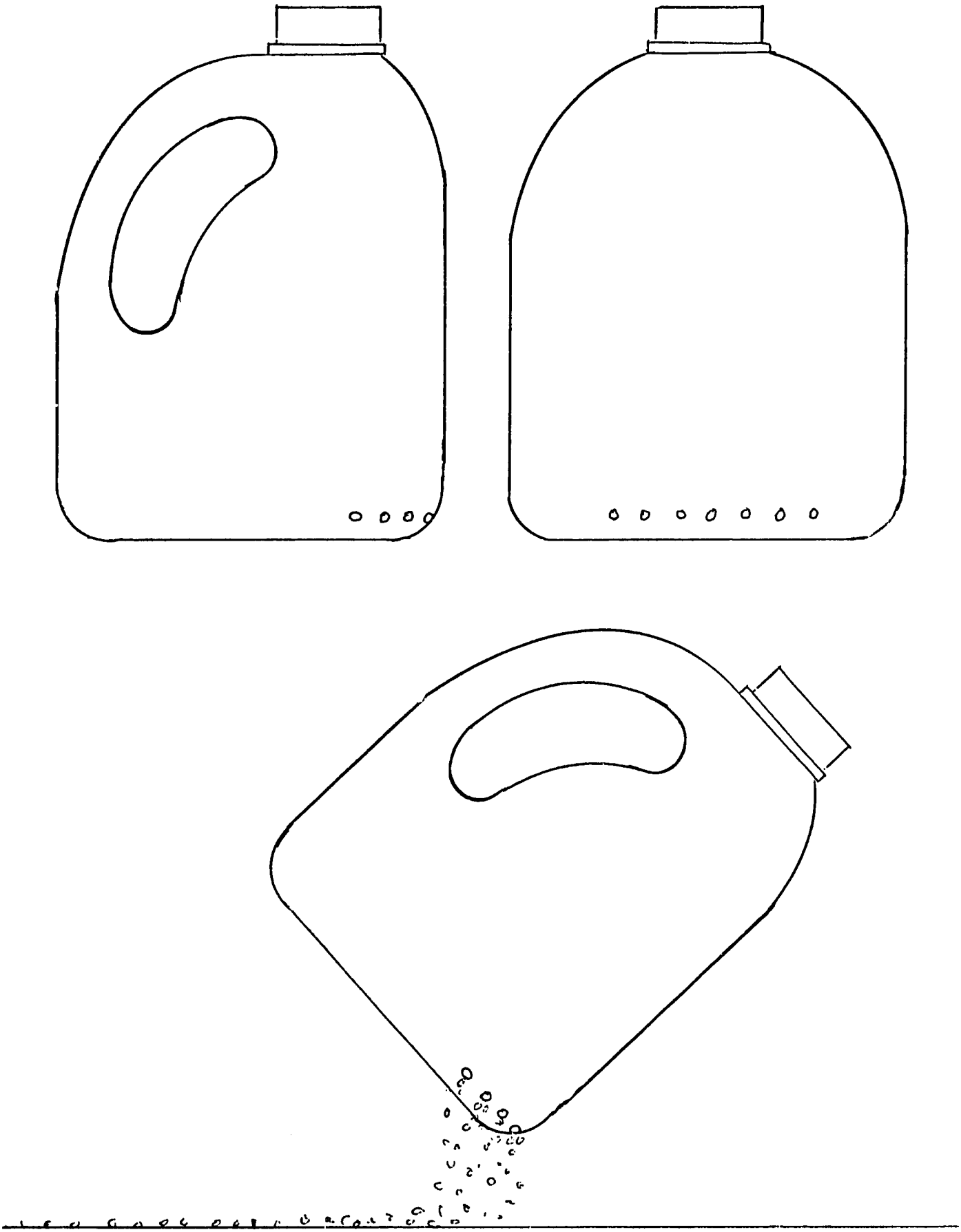

Fig. 6. Granular nematicides can be evenly distributed over soil by use of a "plastic bottle" applicator. Number of holes and size are determined by trial as explained in the text.

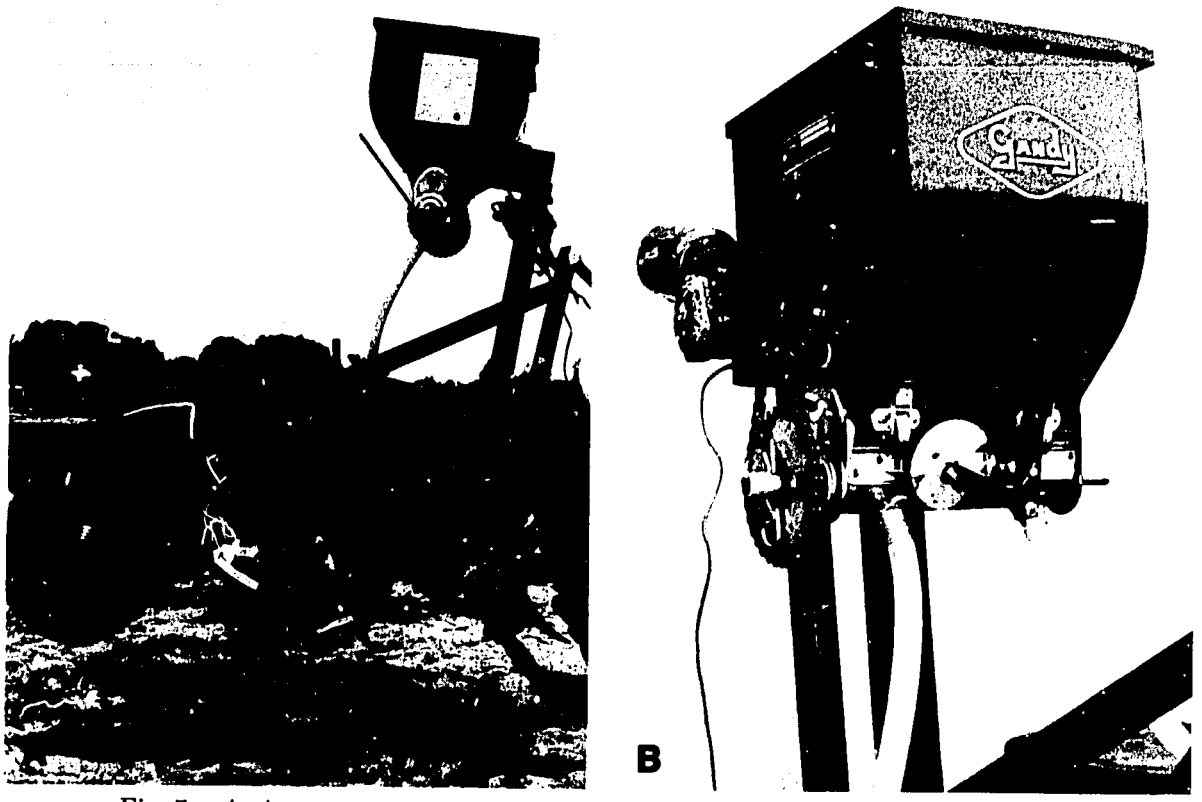

Fig. 7. A: A tractor equipped for application of granular nematicide and sowing of seed. B: The mechanism shown is activated by electricity from the tractor's storage battery. It can be adjusted to deliver the exact amount of nematicide needed.

Place enough granules for one row in the improvised applicator and distribute evenly between the strings. Use a hoe or rototiller to mix the granules with the soil. Complete the application by raking the surface of the plot.

IV. Commercial Applicators

A. Hand Applicators

Commercial hand applicators for soil fumigants have a spike which can be pushed into the soil and a pump which measures the application and delivers it through holes at the bottom of the spike (Fig. 2). If used according to the manufacturer's directions and cleaned carefully after use, hand applicators can be used for many seasons.

B. Tractor Applicators

Tractor applicators for liquid soil fumigants have narrow shanks (about one centimeter wide) which are pulled through the soil (Fig. 3). At the rear of the shank is a tube through which the fumigant flows. An attachment which screws into the shipping container maintains a constant flow of nematicides. Designs vary, but calibration procedures are much the same. Application rate of the fumigant is obtained from the label on the container, and is used to calculate the amount needed per 100 meters of row. Tractor speed is timed to find the number of seconds required to go 100 meters with the shanks 15 to 20 cm deep in the soil. To measure tractor speed, make two lines 100 meters apart. The tractor should cross the first one at working speed, and be timed with the second hand of a watch until it crosses the finish line without change of speed. With the tractor not moving, turn on the applicator. Use a can to catch the flow for that number of seconds, and pour in a graduated cylinder to measure amount. The applicator flow should be adjusted to deliver the calculated amount in the correct number of seconds.

During application, the tractor driver keeps the speed constant and starts and stops flow at the ends of rows.

Figures 7 and 8 show a tractor equipped to make applications of granular nematicides. Amount delivered is adjusted by trial as described for liquids.

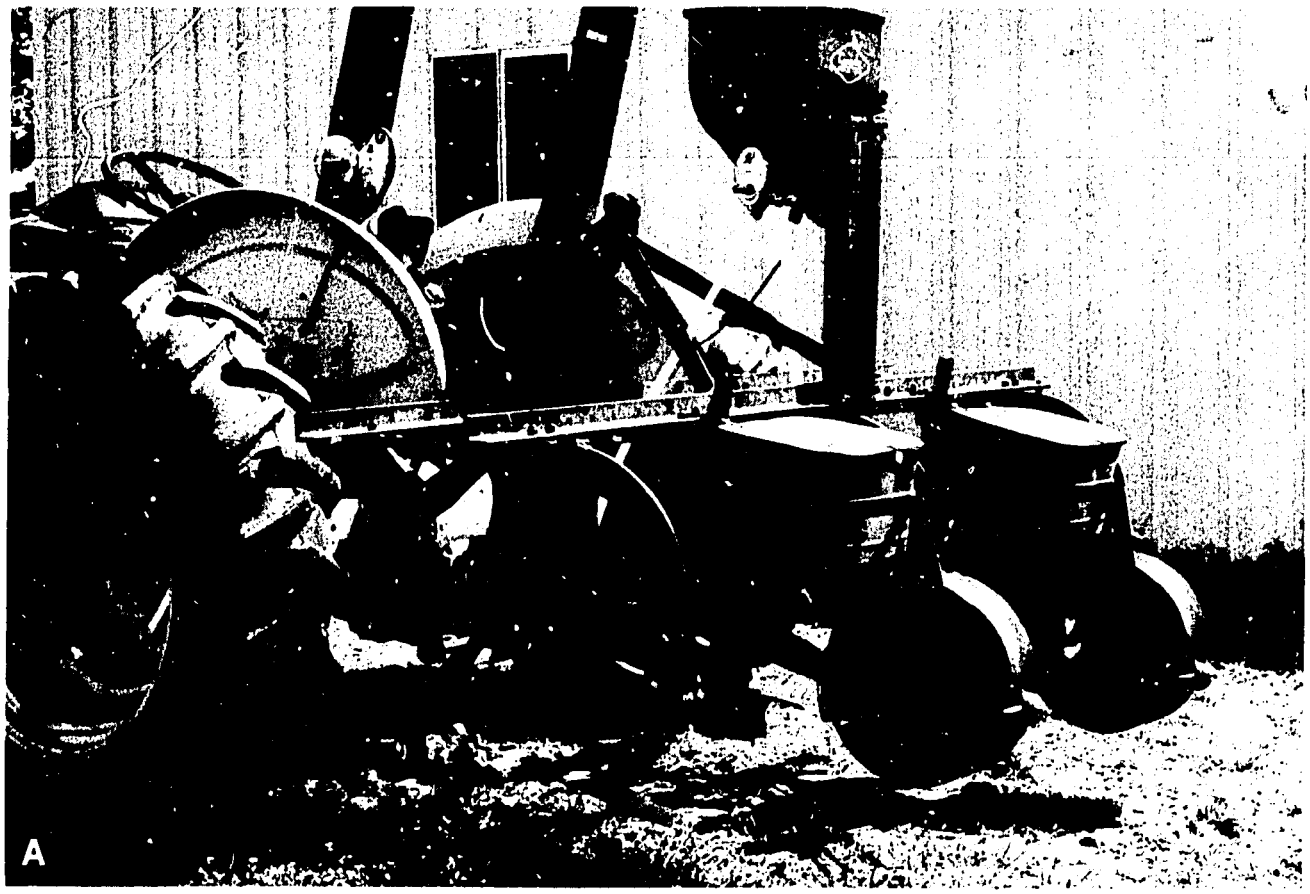

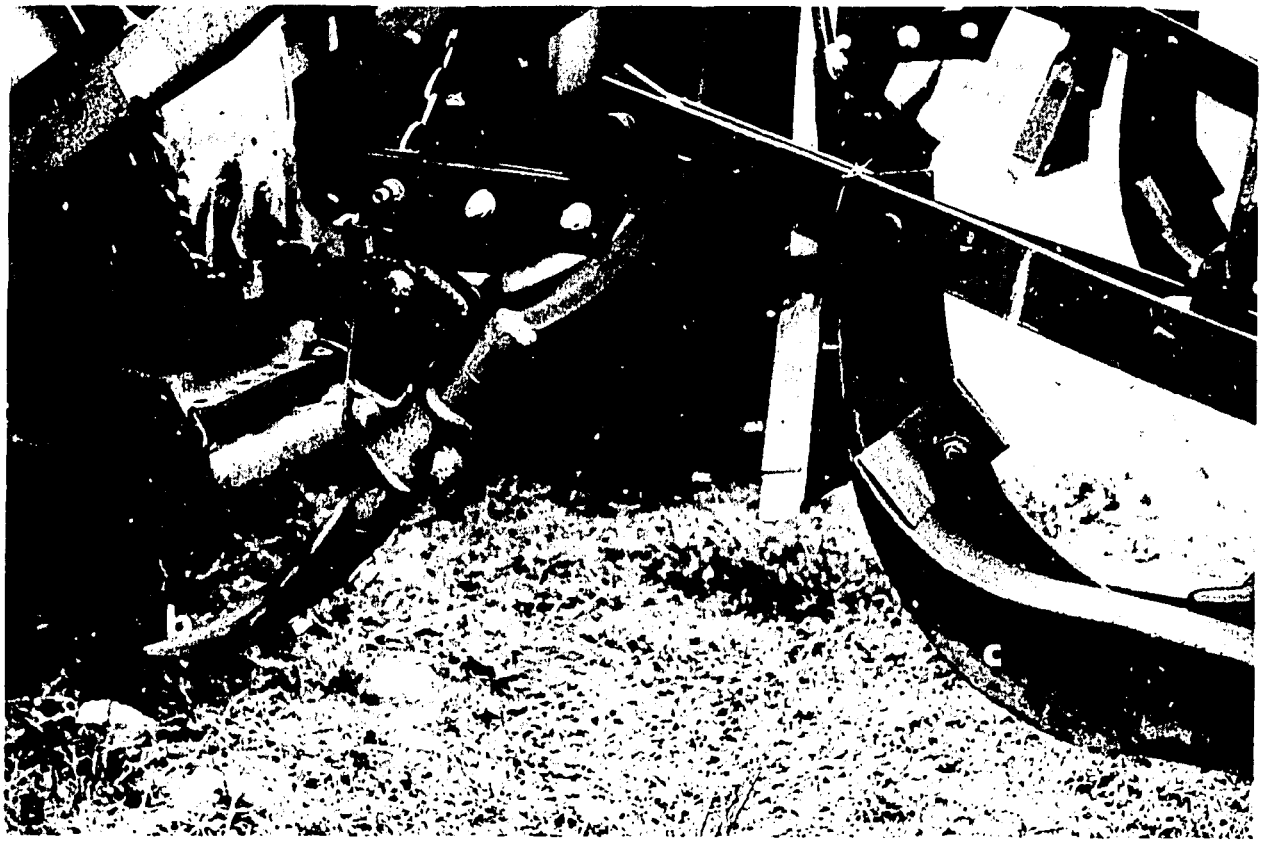

Fig. 8. A: A different view of the same tractor shown in Figure 7. B: The granular nematicide falls through the triangular distributor (a) into a furrow opened by the cultivator shovel (b), and is mixed with the soil by the planter shoe (c).

V. Application of Methyl Bromide to Seedbeds and Potting Soil

A. Materials

Plant-parasitic nematodes, fungi, bacteria, soil insects, and weed seeds are controlled in seedbeds, nurseries and other small plots by use of methyl bromide. Methyl bromide is a liquid with a boiling point of about 4°C. It is sold in cans as a liquid under pressure. When the can is opened, all the methyl bromide flows out rapidly as a liquid or an odorless gas. Because it has no odor, it would be dangerous if not mixed with 2% chloropicrin (trichloronitromethane) which has an odor and is highly irritating to the eyes. Methyl bromide is also obtainable mixed with larger precentages of chloropicrin and other nematicides.

B. Procedure

1. Seedbeds

Soil is prepared for treating as if for planting, and a plastic sheet is placed over the plot with its edges buried about 15 to 20 cm (Fig. 9A). The cover is supported to a height of about 10 cm over the bed by small mounds of soil. A plastic tube extends from the center of the bed where its end rests in an open container. An inexpensive commercial applicator is attached to the other end of the tube (Fig. 9A). A can of methyl bromide is placed in the applicator and the methyl bromide flows through the tube when the applicator is operated. If no commercial applicator is available, an applicator can be improvised as shown in Fig. 9 B, C.

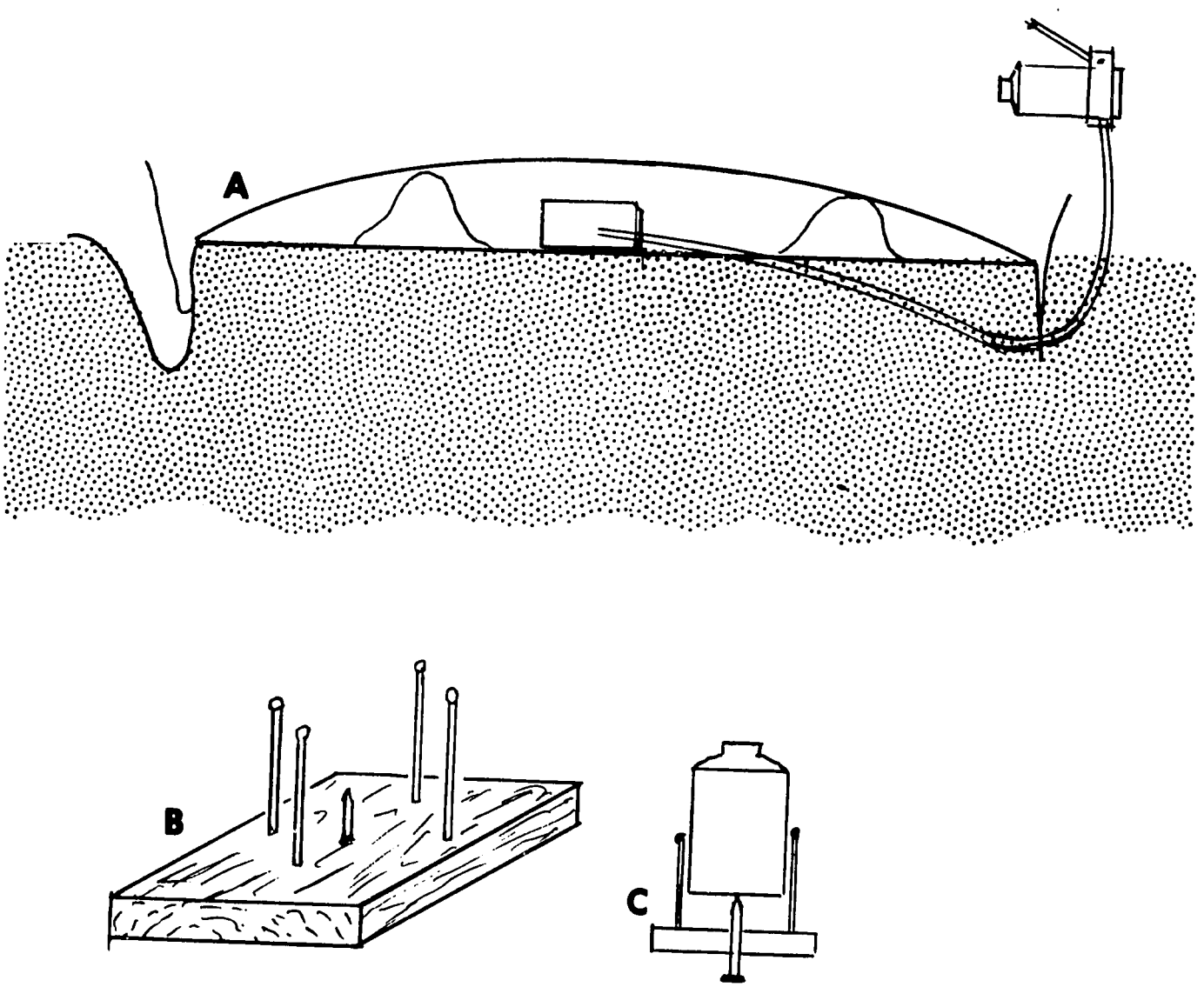

Fig. 9. Application of methyl bromide as a gas to seedbeds. A: Seedbed covered by a plastic sheet. The plastic is supported about 10 cm above the soil surface by mounds of soil or bundles of straw. A tube from an applicator leads to a glass jar under the plastic. B and C: An improvised applicator made with nails and a piece of wood. The apparatus is placed under the cover and the gas released by puncturing the container.

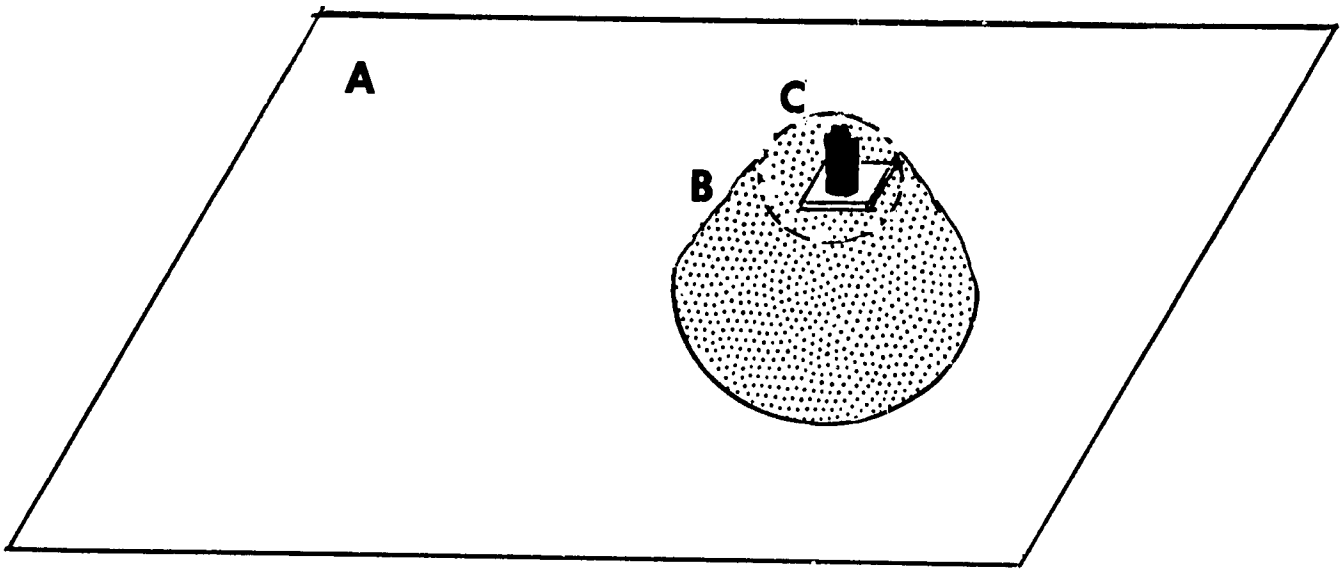

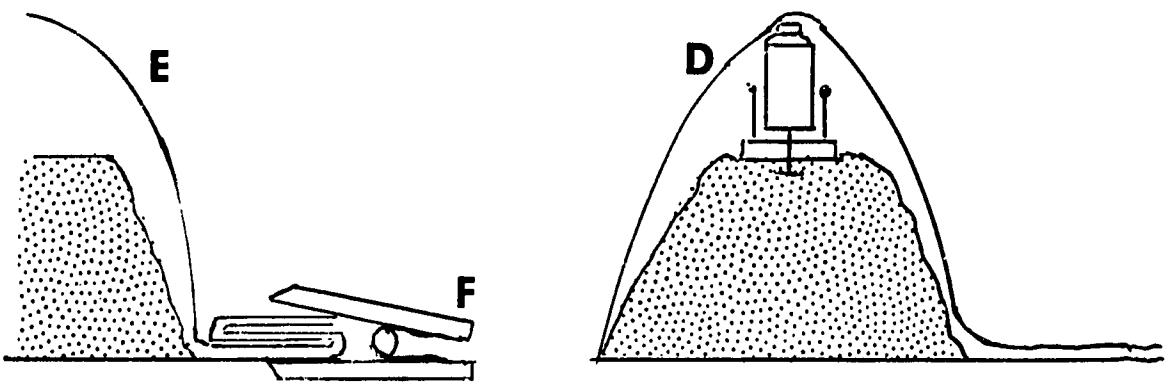

Fig. 10. Potting soil can be treated with methyl bromide by use of a plastic sheet, A. The soil pile, B, is placed on one half of the sheet and the other half folded over as shown in E and D. The edges of the sheet are folded together and secured by clothespins (F) or by heaping soil on them. The methyl bromide is released by an improvised applicator or by a commercial applicator as shown in Fig. 9.

Methyl bromide vapors released under a plastic cover penetrate the soil to a depth of 100 cm or more. Sterilization is nearly equal to that obtained by the use of steam. The usual rate recommended for seedbed application is one pound (453 grams of methyl bromide per 100 square feet or 9.29 square meters). This application rate controls weed seeds as well as nematodes, soil insects, soil bacteria and fungi. It is economical to use for seedbeds because it eliminates hand weeding.

The plastic cover is left in place for 48 hours. Seed or transplants can be planted 24 hours after the cover is removed.

2. Potting Soil

Methyl bromide is also useful for sterilizing potting soil. The soil can be placed in a box or other gas-tight container. Or a plastic sheet can be placed on level ground and the soil heaped on one half (Fig. 10, A, B, C). The methyl bromide can is placed on a board with a sharpened nail protruding upwards. The other half of the plastic sheet is placed over the soil and the edges closed by folding over twice and clamping with clothespins (Fig. 10, E, F), or by placing soil on them.

Table 3. Control of *Meloidogyne* species by dipping planting material in nematicides.

Plant	*Meloidogyne* Species	Nematicide Common and Trade Names	Concentration in parts per million and percent of active ingredient	Time of Submersion	Reference
Actinidia chinensis (Kiwi fruit, Chinese gooseberry)	*M. hapla*	ethoprop (MOCAP)	1000 ppm 0.1%	60 min	Dale and van der Meapel, 1972
Cornus florida (dogwood seedlings)	*M. incognita*	fensulfothion (DASANIT)	1000 ppm 0.1%	15 min	Johnson, et al., 1970
Gladiolus sp. (gladiolus corms)	*M. incognita*	fensulfothion (DASANIT)	600 ppm 0.06%	15 min	Overman, 1969
		or ethoprop (MOCAP)	900 ppm 0.09%	15 min	
Prunus persica (peach roots)	*M. incognita*	fensulfothion (DASANIT)	1000 ppm 0.1%	30 min	Ponchillia, 1973
Rosa sp. (rose roots)	*M. hapla*	ethoprop (MOCAP)	1000 ppm 0.1%	30 min	Dale, 1973
		or fenamiphos (NEMACUR)	1000 ppm 0.1%	30 min	

When the package is secure, the can is punctured by pressing it down on the nail (Fig. 10, D). The cover is left in place for 48 hours, then removed. The soil can be used 24 hours after the cover is removed.

VI. Control of *Meloidogyne* Species in Planting Material by Nematicides

Planting material infected by *Meloidogyne* species can be disinfected by dipping bare-rooted transplants in solutions or emulsions of the nematicides ethoprop, fenamiphos, and fensulfothion. Kinds of planting material which have been treated successfully, concentrations, and times of immersion are given in Table 3.

The usual procedure is to wash the planting material free of soil, immerse the roots in the prepared solution for the required time, drain, and plant as soon as possible, taking care that the roots do not dry. Small seedlings can be tied in bunches. Gladiolus corms can be handled in wire baskets or in cloth bags.

All these nematicides are poisonous and dangerous if swallowed or absorbed through the skin. Read the label on the container for directions and precautions. Working arrangements for dipping must insure that no liquid comes in contact with the skin or clothing of the worker, and that there is no exposure to fumes of the nematicide.

3.
Experiments with Nematicides

I. Introduction

Experiments with nematicides have several purposes:

1) They provide convincing evidence that yields can be increased by nematode control. If use of nematicides is economically feasible, experiments provide useful information on methods, results, and profits. When the use of nematicides is not profitable, demonstration of yield increases provide a strong incentive to find other nematode control methods.

2) Experiments demonstrating yield increase in farm fields are evidence that nematologists are working on a subject which will be of benefit to farmers and will increase food supplies.

3) Standardized nematicide experiments by cooperators of the International *Meloidogyne* Project will permit comparison of data from different parts of the world, and be of benefit to all cooperators.

II. Materials and Methods

A. Materials

1) A field or at least part of a field 20 x 20 meters (400 square meters) and preferably 40 x 40 meters (1600 square meters) or larger. The land should be level and have a moderate infestation of *Meloidogyne* species. Infestation can be measured by use of "indicator plants" as follows:

a) Collect soil samples at 5-meter intervals. Each sample should be taken from an area of about one square meter and should be a composite of 4 samples of about 500 cc each. Samples taken from the soil layer about 10 to 20 cm deep are best. Number the samples and make a drawing showing location of each.

b) Place the composite samples in pots (tin cans, plastic bags) and plant 2 or 3 tomato seedlings grown in nematode-free soil, or 10 tomato seeds in each pot. Fertilize lightly and water every day. If seeds are planted, remove all but 2 or 3 seedlings from each pot. Allow to grow for 4 or 5 weeks and examine the roots. These are indicator plants to be used for estimating infestation of the soil.

c) Remove the tomato plants from the pots and wash off the soil. Examine the roots for *Meloidogyne* galls. Rate each plant as follows:

0 = no galls
1 = 1 - 10 galls
2 = 11 - 20 galls
3 = 21 - 50 galls
4 = 51 - 100 galls
5 = 101 or more galls

The results will give an indication of the *Meloidogyne* infestation of the plots. Make a diagram of the plots, locating the samples and indicating gall rating.

d) Fields can also be selected at the end of a crop season by examination of living roots remaining in the soil. If the crop has a moderate infection and roots are not excessively decayed, there will probably be a good infestation for experimental purposes the next season.

2) A supply of one of the nematicides listed in Table 1.

3) Measuring tape and stakes for plots.

4) A balance for measuring applications of granular materials, or graduates for measuring liquids.

5) Farm equipment, such as hoes and spades.

6) If a commercial applicator is not available, make an improvised applicator as described in Chapter 2, II.

B. Methods

1. Preparation of Plots

a) Plow the soil and prepare it for planting.

b) Lay out plots. Sixteen plots are needed. These should be in 4 blocks of 4 plots each (Fig. 11). Plots may be square or rectangular according to the shape of the field.

c) Mark each plot with a stake showing the treatment. These stakes should be 4 or 5 cm wide and 50 to 60 cm long. They should be strong enough to last for the duration of the experiment.

2. Treatments

Four solid or overall treatments as follows:

A. Control, no nematicide.
B. One-half the amount recommended by the manufacturer of the nematicide.
C. The amount recommended by the manufacturer.
D. Two times the amount recommended.

Each treatment is applied to four plots randomized so that no two plots receiving the same treatment are adjacent (Fig. 11).

3. Preparation for Treatment

a) Calculate the number of grams of granular nematicide or the number of milliliters of liquid needed for each C plot, that is, the amount recommended by the manufacturer of the nematicide. This information is obtained from the label of the container or from the manufacturer's circulars. The amount may be specified as application rate per acre or per hectare. Table 2 gives amounts per square meter and amounts per 100 meters of row for various application rates.

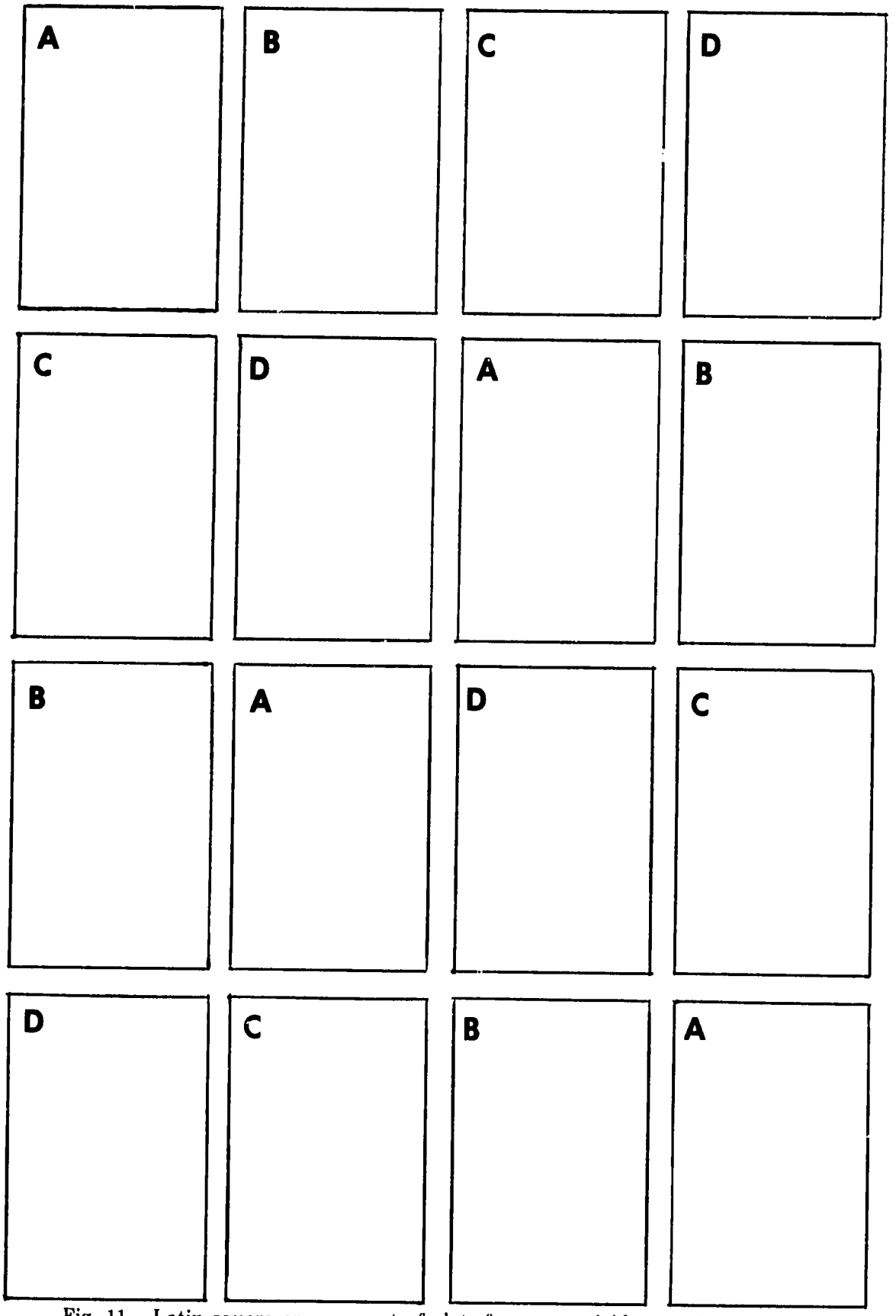

Fig. 11. Latin square arrangement of plots for a nematicide experiment with four replications of control plots (A) and three treatments (B,C,D). Note that each row and each column has all four treatments.

Check the calculations for C plots carefully. Then calculate one-half the amount for B plots, and two times the amount for D plots.

b) Assemble all materials and equipment needed and make a trial application on a piece of ground not to be used for the experiment. If this goes well, proceed with the application.

c) Make a diagram of the plots and the field (see Fig. 12). This will locate your plots even if your stakes are lost, and will also permit their location again in the future.

4. Planting and Care of the Plots

After the waiting period recommended by the manufacturer of the nematicide, plant the plots, following the best procedure used in your region.

It is suggested that the experimental plots be weeded, cultivated, and otherwise cared for by your own technicians. Plots should be visited at frequent intervals to be sure that nothing is going wrong, such as insect infestations, diseases, or accidental interference.

5. Publicity

Before harvest when your plots show large differences, invite farmers to come and see the plots; tell them what you have done and what they can do to improve yields by nematode control.

From the start of the growing season until harvest, be sure that your supervisors know what you are doing. If possible take them to see the plots.

6. Taking Data

a) During the growing season, make notes of any differences in growth, death of plants, or wilting. If possible, take numerical data, plant height, percentages dead or wilted, etc.

b) Four to six weeks after planting, dig 5 to 10 plants from each plot and rate for galling as with the indicator plants of Section II, A (c).

c) At harvest time, you will need bags, crates or other containers to hold the produce, preferably one for each plot. Also scales to obtain weights. Data will be yield of each plot; and if the produce is usually graded, the weight of each grade.

d) After harvest, dig up the plant roots and rate them for root-knot galls, using the same method as for indicator plants (Section II, A, c).

7. Calculations

Calculate weights and value of produce from each plot, and averages of the four plots of each treatment. This data can be analyzed by standard methods of analysis of variance.

8. Reporting

Write a report of the experiment in good form for publication and send to the appropriate journal, with a copy to the Headquarters of the International *Meloidogyne* Project.

9. General

Photographs of difference in growth in plots are useful. These may be color slides for use at scientific meetings, and also black and white for publication. It may be possible to photograph the harvest in a way which will show differences between treatments and controls.

Be sure that administrators and supervisors have a full report of results.

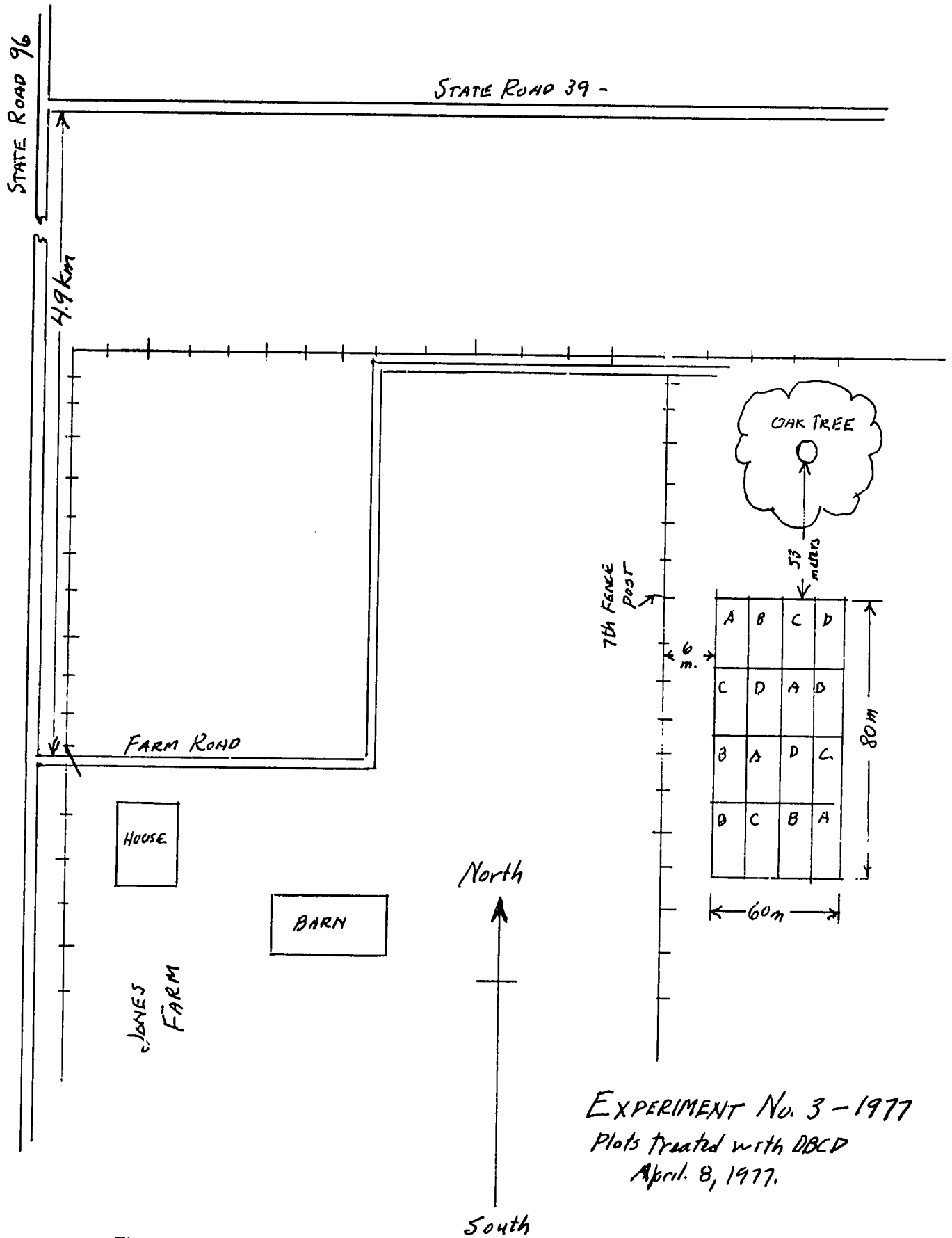

Fig. 12. Location map for an experiment with a nematicide. The junction of the two highways is the starting point for location of the Farm, and the plots are located exactly by measurements from the fence and oak tree.

REFERENCES

Dale, P. S. and G. J. van der Mespel. 1972. Control of root-knot nematodes on Chinese gooseberry (Kiwi fruit), Actinidia chinensis, by chemical bare-root dip. Plant Dis. Reptr. 56:850-851.

Dale, P. S. 1973. Elimination of root-knot nematodes from roses by chemical bare-root dips. New Zealand Jour. Exp. Agric. 1:121-122.

Good, J. M. 1969. Methods for applying nematicides and soil fumigants, pages 297-313 in Nematodes of Tropical Crops, J. M. Peachey, ed. Tech. Communication No. 40, Commonwealth Bureau of Helminthology, St. Albans, Herts., England.

Johnson, A. W., T. J. Ratcliffe, and G. C. Freeman. 1970. Control of Meloidogyne incognita on dogwood seedlings by chemical dips. Plant Dis. Reptr. 54:952-955.

Overman, A. J. 1969. Gladiolus corm dips for root-knot nematode control. Florida State Hort. Soc. Proc. 82:362-366.

Ponchillia, P. E. 1973. Control of Meloidogyne incognita on peach by chemical bare-root dips. Plant Dis. Reptr. 57:489-491.

APPENDIX 1

Foreign Addresses of Manufacturers or Suppliers of Nematicides

Manufacturers or Suppliers	Addresses
Dow Chemical of Canada, Ltd.	P. O. Box 1012, Sarnia, Ontario, Canada
Dow Chemical Europe S.A.	Bachtobeletrasse 3, Horgen, Switzerland
Dow Productos Quimicos, Limitada	Av. Paulista, 1938-19 Andar, Caixa Postal 30.037, Sao Paulo, Brazil
Dow Chemical Pacific, Ltd.	New Henry House, 6th Floor, P. O. Box 711, Hong Kong, B.C.C.
E. I. duPont de Nemours & Co. (Australia), Ltd.	P. O. Box 930, North Sydney, N.S.W. 2060, Australia
DuPont do Brazil S.A.	Rua da Consolacao, 57-60 Andar, Sao Paulo, Brazil
DuPont of Canada Ltd.	Box 26 Toronto-Dominion Centre, Toronto, Ont. M5K 1B6
DuPont de Colombia, S.A.	P. O. Box 15024, Bogota, Colombia
DuPont de Nemours International S.A.	(for Europe, Middle East and Africa) P. O. Box CH-1211, Geneva 24, Switzerland
DuPont Far East Inc.	11-39 Alaska 1-Chome, Minato-Ku, Tokyo 107, Japan
DuPont Far East Inc.	Newton P. O. Box 73, Singapore 11
DuPont Far East Inc., Taiwan	P. O. Box 22700, Taipei
DuPont Philippines	P. O. Box 1718 MCC, Makati, Rizal, Philippines 31117
FMC International	Ag. Chem. Division, Athens Tower "B", Athens 610, Greece
FMC International A.G.	P. O. Box 46179, Nairobi, Kenya, Africa
FMC International	c/o S.T.E.P.C., Societe Tropicale d'Engrias et de Produits Chimiques, Boite Postale 107, Abidjan, Cote d'Invoire
FMC International S.A.	P. O. Box 1964 MCC, Makati Commercial Center, Makati, Metro Manila, Philippines D-3117
FMC International	P. O. Box 10-60, Bangkok, Thailand
FMC International	P. O. Box 4596, Jakarta, Indonesia
FMC Far East Ltd.	Mori Bldg. No. 24, 23-5 Nishi Shimbashi 3-chome, Minato-Ku, Tokyo 105, Japan
FMC International S.A.	Seoul Rep. Office, 93-62 Buk Chang-Dong, Chaung-Ku, Seoul, Korea
FMC Europe S.A.	177/179 Chaussee de la Hulpe, 1170 Brussels, Belgium
FMC International S.A.	Ag. Chem. Division—2nd floor, Marxergasse 10/1, (P. O. Box 27), A-1033 Vienna, Austria
FMC International S.A.	Sucursal de Costa Rica, Aptdo. 2847, San Jose, Costa Rica
FMC de Mexico	P. O. Box 7-1446, Mexico 7, D.F.
FMC Corporation	Apto., Aereo 5511, Cali, Colombia
FMC do Brasil A.S.	Avda. Paulista, 1274-9 floor, Sao Paulo, Brazil
FMC Argentina	Ave Madero 1020, Piso 16, 1106 Buenos Aires, Argentina
Mobil Chemical Co.	Cable: Mobil Chem—Richmond, TWX (710) 9584408
Shell International Chemical Co.	Shell Center, London SE 1 7PG, England
Union Carbide Australia, Ltd.	G.P.O. Box 5322, Sydney, N.S.W. 2001, Australia
Union Carbide S. Africa Ltd.	P. O. Box 27675, Sunnyside 0132, Pretoria, Transveal, Republic of South Africa
Union Carbide Middle East Ltd.	P. O. Box 740, Athens, Greece
Union Carbide Europe Societe Anonyme	P. O. Box 1211, Geneva 17, Switzerland
Union Carbide do Brazil, S.A.	Avenida Paulista, 2073—17° Andar, Horsa II, Sao Paulo, Brazil
Union Carbide Inter-America, Inc.	Agricultural Chemicals, Los Nardos 1018, Lima 27, Peru
Union Carbide Eastern Incorp.	Agricultural Products, P. O. Box 818, Hong Kong
National Carbon Company Ltd.	P. O. Box 4785, Karachi, Pakistan
Union Carbide India Ltd.	Agricultural Products, P. O. Box 533, New Delhi-1, India
Union Carbide Philippines, Inc.	P. O. Box 56, Commercial Center Post Office, Makati, Metro Manilla, Philippines 3117
Unicar, S.A.	Edificio Real Reforma, 7-B, Ave. La Reforma 13-70, Zona 9, Guatemala City, Guatemala, C.A.
Union Carbide Mexicana, S.A.	Depto. Quimicos Agricolas, Ave. Presidenta Masaryk No. 8, Mexico 5, D.F.