PN-AAK-777 FROM MR. STERN

The Philippines Agricultural Sector in 2000 A.D.

Result From The MAAGAP National Model

PHIL., GEN.

Bob, if you haven't already reviewed this, you may find it of interest. — Jim

19 July

Bob N.

ENJOY

David E. Kunkel
Gil Rodreguez Jr.
Leonardo A. Gonzales

PN-AAK-777

Foreign Demand and Competition Division, ESCS, USDA and Bureau of Agricultural Economics, Ministry of Agriculture, Republic of the Philippines

March 19, 1979

ABSTRACT

A mathematical programming model of the Philippine agricultural sector was used to look at alternative scenarios for the year 2000. Model results indicated an expanding agricultural sector able to meet the needs of the Philippines. However, improved technolgies for corn, feedgrains and vegetable crops are required if higher relative prices for these and livestock products are to be avoided.

KEYWORDS: Agricultural sector analysis, Philippines, mathematical programming, projections, development planning.

The Philippines Agricultural Sector in 2000 A.D.:
Results from the MAAGAP National Model

Over the past several years a mathematical programming model for the Philippine agricultural sector has been developed for policy and planning analysis. The purpose of this paper is to report on the use of the MAAGAP 1/ in looking ahead to the year 2000 using alternative export prices of sugar and coconut products. Since the theory, structure and validation of the model has been reported elsewhere it will only be summarized in this paper. (see Kunkel, Rodriguez, Gonzales, and Alix, Kunkel, Gonzale and Alix). Next the general assumptions used for the analysis are given. Following this analysis of the results obtained and their implications for planning will be discussed.

General Components

The MAAGAP national model is a mathematical programming model that evaluates the economic aspects of the Philippine agricultural sector at the national level. The model assumes the following conditions: a given set of national supply of resources (land, labor, capital): a set of national demand for agricultural commodities; and production technologies.

The overall objective was to aggregate and analyze the majority of the agricultural activities in sufficient detail to obtain probable adjustments

---

1/ This reserach was part of the agricultural Diversification and markets projects a joint USDA and The Bureau of Agricultural Economics, Economics project funded by USAID, National Science to Development Borad of the Philippines, Philippine Council of Agricultural and resource. Research and the The Philippine Ministry of Agriculture. MAAGAP is a Filipino word which means "alert", ahead" symbolic of the spirit of planning. Literally, it can be translated as Model Analysis of Agricultural Adjustments in the Philippines

on the production patterns, resource requirements, processing-distribution and transportation needs at the national levels.

With the use of a mathematical programming framework, an integrated picture of Philippine agriculture can be depicted. The framework permitted the identification of production-processing-distribution opportunities and specifications of alternative activities competing for the sector's limited resources with demand linkages. The model used linear programming techniques to simplify the complex roles that the agricultural sector plays in the Philippine economy.

Figure I presents a flow diagram of the model. 2/ The arrows trace the flow of goods and services from the input side (resources) through primary production and processing activities to final demand (domestic and export). The eleven crops taken together comprise 93 percent of the total area and 86 percent of the total value of crop production in Philippine agricutlure.

The unit of inquiry in this study was focused on aggregated homagro-economic area based on economic, agronomic, and environmental characteristics such as rainfall, physical landscape, soil, predominant crops and other factors. The delineation made it possible to identify areas within which only particular types of agricultural products can be raised. Furthermore, the stratification facilitates the identification of the existing and potential patterns of agricultural production in the country.

Activities and Constraints

Activities in the model represent a variety of choices at the national

---

2/ Overall, the MAACAP Model contained 158 rows (constraints) and 504 columns (activities) in the 1972 base.

Schematic Diagram of the Adam National Model

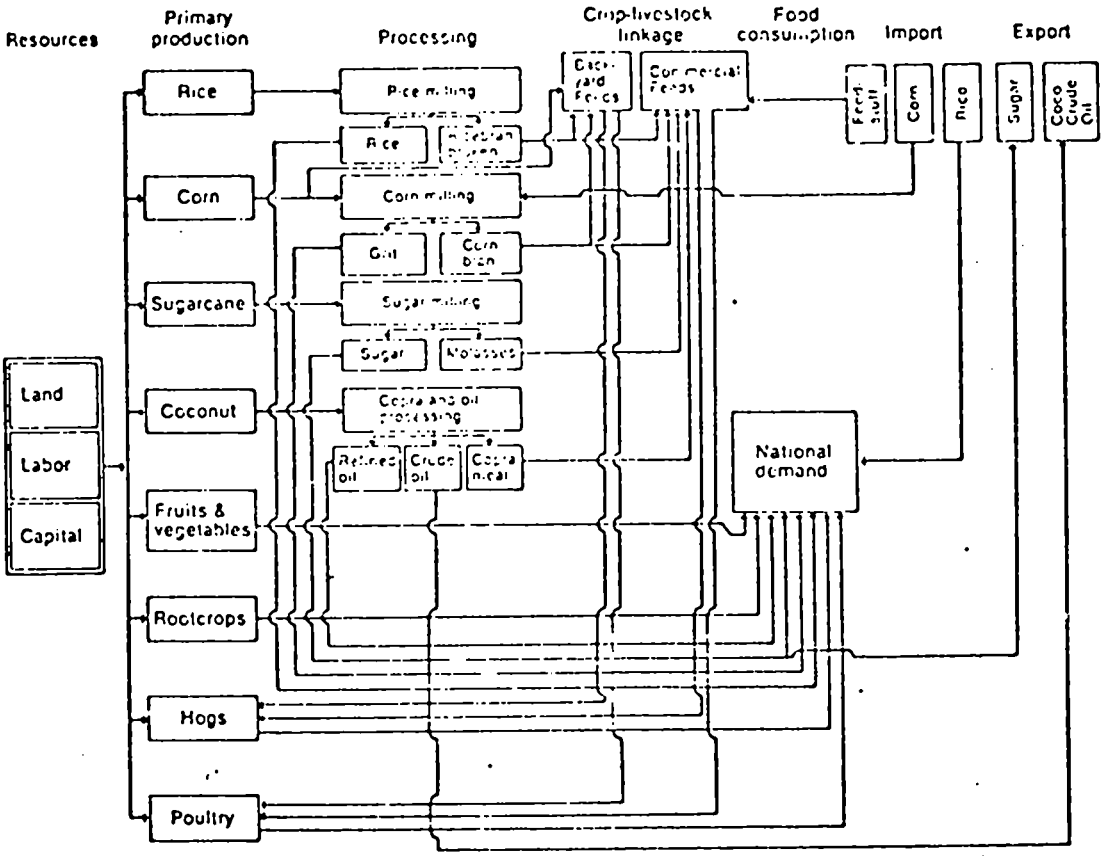

level. They were developed for the various enterprises according to land capability clases, water availability, usage of fertilizer and modern inputs and yield levels. The production activities transformed the production inputs into either final outputs or intermediate products which were in turn used as inputs in other activities.

Intermediate activities transformed output into final form used for consumption. Example of such activities are rice and corn milling, sugarcane milling and copra oil processing. Furthermore, by-prodcts of these intermediate activities were used as crop-livestock linkages in the form of both backyard and commercial feeds.

Input supply activities were also provided for fertilizer, chemicals, short-term capital, tractor service, animal and man labor. Man labor supply activities represented farm (family labor) and non-farm (hired labor) sources distributed on a bi-monthly period throughout the year.

Sales and revenue were formulated to represent segmented demand function using constant elasticities. Elasticities for each of the different products were estimated outside of the model.

Sugar is exported and sold domestically while copra is processed into crude and refined oil for export and demand consumption, respectively. Imported activities for rice, corn grain, and feedstuffs are provided in the model to take care of shortages in rice domestic demand and commercial feeds.

The approach in calculating the demand objective function for the products was by grid linearization and separable programming. With the latter approach and the additional assumption of convexity, the solution will never use more than two of the segmented activities in the demand set of a particular commodity.

Resource constraints include man, animal and tractor constraints all expressed in bi-monthly periods; five land capability classes divided semi-annually; capital and chemical constraints expressed in peso units; fertilizer constraints expressed in pure NPK forms; crop area and sugar capacity constraints; restraints on livestock inventory and feed requirments; import-export quotas; several miscellaneous balance equations and convex combination constraints for the demand segments the 13 final products.

The Planning Problem

Over the past several years their has been an interest in looking ahead

to the year 2000 as well as evaluate current economic plans. The MAAGAP model has been used several times during these efforts first with the midterm evaluation of the 1973-76 four year plan and later for 1980, 1985 and 2000 (Kunkel and Gonzales; Kunkel, Gonzales, and Alix). Many of these analyses were done for a specific purpose with different underlying assumptions. For this analysis a consistant set of assumptions were used for the 1977-82 plan period with projection for 1987 and 2000. The MAAGAP model projections are used as a consistency check of the projections made independently by the agricultural planning groups for the plan. As much as was possible the same assumptions and data used for the plan were used by the MAAGAP model.

The general procedure used in making projections was to modify the model inputs based on the best available information as to what the future supply of fixed resources, particularly land, would be and the level of prices for resource supplied at fixed cost for each period. For some resources such as tractors and irrigated land after 1987, purchase activities were provided to add to base period inventories. In addition, import and export price levels for those commodities traded had to be set.

It was also necessary to allow for some level of technological change in the production of most commodities. This was incorporated by examining the trend over the past twenty five years for the crops included in the model. This together with discussions on potential yields was used to allow at least the same rate of change to occur over the next twenty five years. It was felt that technological change was not witout cost so that for the incremental increase in yields over base period yields the current average fertilizer requirement was added. The only increase in labor used was for harvesting. This was increased at the average rates used during the base

period. Only in the case of coconuts where a new technology for hybirds is on the horizon were specific new production activities added.

Three general pricing scenarios were used to reflect high, medium and low export prices for coconut and sugar products. Scenario I assumes that low price levels for both sugar, crude coconut oil and copra will prevail throughout the period. Scenario II assumes a medium sugar price and the same coconut product prices as in Scenario I. Scenario III assumes relatively high sugar and coconut product prices. In addition, for the year 2000 the sugar milling capacity constraints were relaxed. The specific assumptions as well as other common assumptions are given in Kunkel et. al. Detailed discussion of the procedure used can be found in the Data Base of the MAAGAP (Gonzales, Kunkel, Alix).

RESULTS

Sectoral Effects

Results from the model showed that Scenario III or the assumption of optimistic prices for sugar and coconut products, would have the highest positive impact on farm income, employment, export, and the general usage of agricultural inputs in the agricultural sector from 1976 to 2000. If however, pessimistic sugar and coconut prices were assumed (Scenario I), the results would have negative effect on farm income, exports and general price levels within the same time frame as Scenario III.

Farm income as estimated by MAAGAP in Scenario I would decline slightly until 1982 and then increase from then on until the year 2000. Scenario II shows farm income increasing throughout the period with a 3.8% per annum growth rate overall. Scenario III, as expected showed substantial increase

in farm income in all periods ending with a 4.75% per annum growth rate. Given the recent international sugar agreement, Scenario I does not appear likely to occur and the suceeding discussion will only refer to Scenario's II and III.

Input requirements for a growing agricultural sector calls for fairly large increases in non-traditional inputs such as fertilizers, chemical, feedstuffs and tractor services with only a moderate increase in animal and man labor inputs (see table I).

Table I.--Summary of Growth Rates Per Annum of Input Demand

Resource	Period	Growth Rate
On Farm Employment		1.6-1.8%
Animal Labor		1.3-1.8%
Tractor Services	1976-1987	12-13%
	1987-2000	5-6%
Fertilizer	1976-1987	4-5%
	1987-2000	3-4%
Chemicals		2.5-3%
Commercial Feeds	1976-1987	7%
	1987-2000	6%

Supply-Demand Balance

The results of the MAAGAP model solution give the supply-demand balance at equilibrium product prices for the projected resource availabilities and prices over the period. These supply-demand balances provide an indication of how the agricultural sector will meet projected demand level at what prices and levels (see tables 2, 3, 4).

Of principal importance is how future demands for rice and corn are met. Rice production is indicated to be sufficient to be meet future demand without any substantial changes in real prices for Scenario II. This means that production

increases at about the same rate as demand is expected to increased to increase at 2.7% per annum from 76-82 and declining to 2.25% by the year 2000 without much surplus. Since in this analysis no rice exports were allowed and rece t technological breakthrough have not been incorporated a future analysis will explore whether exports are possible and at what prices. In Sencario III with higher prices for sugar and coconut products given, the growth in palay output is slowed. This results in somewhat higher prices up to 1987 and some imports in the year 2000 due to substitution of sugar production for rice.

For corn production the model indicates some problems given the rates of technological change assumed. In both Scenario I and II corn production increases at only modest rates and requries significantly higher prices to induce this increase in output. Thus, there must be a significant breakthrough in term of production technology for corn, or appropriate substitutes develoepd, if this situation is to be avoided.

The production of bananas for domestic consumption and vegetables (leafy, fruit type, and root) appears to be in balance at stable prices up through 1987. Thereafter increased output is only obtained at higher prices. This indicates the need of a better production technology for these crops by 1987.

For the two export crops included in the model, sugar and coconuts, growth rates in production decline after 1982 for both Scenarios II and III. The higher price option for coconuts does, however, significantly affect their output indicating that even with hybrid production, sufficient price incentives must be maintained. For both of these products fairly rapid growth rates in domestic demand will affect export availabilties in the year 2000.

Finally for livestock products, the necessary production increase to meet the large projected increase in demand occurs only with higher prices particularly

by the year 2000. However, there is some doubt whether the high income elasticities of demand used will hold at higher consumption levels or whether the income growth will result in sufficient purchasing power to support those high growth rates. Thus, these growth rates in demand are probably reasonable and the higher price levels may not result. These demand levels were used primarily to reflect the most optimistic demand levels which might occur.

CONCLUSIONS

Implications for Planning

The above analysis, based on the best information available and certain assumptions about the changes in resource availabilities and technology, has highlighted some problem areas in the attainment of development plan goals for agriculture. Of principal importance is the need for improved technologies for corn, feed-grain and vegetable crops if higher relative prices for these and livestock products than now exist are to be avoided.

In addition, the increasing domestic demand for sugar and coconut oil products are likely to reduce their availability for export in future years. For sugar given the development of high fructose processes which converts corn or other carbohydrates into fructoses it may be just as well to carefully explore alternaties to sugar. Once these are develoepd they can be incorporated in the model for indicating the feasibility and impact on the agricultural sector.

Limtations and Directions for Further Analysis

The principal limitations of equilibrium models must be kept in mind: first is the sensitivity of the model to specification error and second is the comparative static equilibrium approach. Thus, the results presented in this paper should be interpreted in terms of expected directional changes and relative

magnitudes rather than expected absolute quantitative changes.

In addition, the model still does not have complete coverage of the agricultural sector and this is only a partial analysis. Further expansion of the model to include excluded commodities particularly for export crops such as bananas, abaca and tobacco is needed in order to realistically reflect the foreign trade component. On the other hand, energy and other imported inputs need to be more explicitly covered if policy implications on changes in energy costs are to be adequately handled.

The model is most useful for the policy issues which can be asily quantified in terms of a major change in demand for output, changes in input supplies or changes in production techniques. It is not very useful for fine tuning agricultural policy for either small changes of a particular input or other parameters which represent only a small component of the agricultural sector. It is also not useful for policy issues which are of a short-run or cycle nature (less than one year). For these kinds of problems other models and analytical techniques are more appropriate. What is important is for the analyst to be able to relate the analysis needed to the problem and then use the type of analysis that is appropriate. As such the MAAGAP model serves a useful purpose but should be complemented by other models and analyses.

 BEST AVAILABLE DOCUMENT

Table 2. MAACAP Estimates of Annual Growth Rates of Selected Agricultural Indicators, by Scenario, Philippines, 1976 - 2000

Commodities	Units	Base 1976	Annual Growth Rates in Percent 1/								
			Scenario I			Scenario II			Scenario III		
			1982	1987	2000	1982	1987	2000	1982	1987	2000
Harvested Area	Mil. Hectares	10.955	.08	1.27	1.25	0.91	1.56	1.36	1.31	1.44	1.25
Farm Income	Mil. Pesos 2/	11029	(.019	2.20	3.56	2.27	3.13	3.67	5.61	4.82	4.75
On Farm Employment	Mil. Mandays 2/	807	.10	1.26	1.48	1.70	1.80	1.60	2.79	1.94	1.84
Exports (Sugar and Coconut Products)	1,000 m. t.	2461	(12.50)	(8.05)	(3.22)	3.60	1.46	0.19	7.31	2.89	3.17
Imports (Rice & Protein feed supplements)	1,000 m. t.	197	8.58	7.28	6.30	7.84	7.28	6.74	8.58	7.21	8.13
Operating capital	Mil. Pesos 2/	12060	6.06	3.43	3.67	5.95	3.43	3.66	6.06	3.45	3.70
Chemicals	Mil. Pesos 2/	525	.06	1.25	1.83	3.38	3.93	3.53	3.49	2.96	2.42
Fertilizer	1,000 m. t.	338	2.19	2.80	2.94	4.37	4.19	3.20	8.18	5.12	3.67
Animal Labor	Mil. Animal days	142	0.23	1.42	1.19	0.46	1.48	1.28	2.94	1.91	1.89
Tractor Services	1,000 Tractor days	1260	7.62	12.218	6.60	15.59	12.54	6.43	17.19	13.22	4.23
Commercial Feeds	1,000 m. t.	1676	8.59	6.80	5.89	0.36	6.80	5.84	8.63	6.99	5.97
Chicken Inventroy	1,000 heads	64301	2.51	3.42	2.79	2.51	3.42	2.79	2.51	3.50	2.79
Hog Inventory	1,000 heads	7064	2.39	1.80	1.79	2.12	1.80	1.76	2.40	1.66	1.84
Price Index 3/		99.23	(.93)	(.37)	.79	0.55	0.41	0.86	1.72	1.14	1.30

1/ Figures in parentheses ( ) mean negative annual growth rates.
2/ In constant 1976 pesos.
3/ Weighted for each commodity by dividing production of each commodity by total value of production, 1972 = 100.

Table 3. MAACAP Estimates of Annual Growth of Production of Selected Agricultural Products by Scenario, Philippines, 1976 - 2000
(In thousand Metric Tons)

Commodities	1976 Base	Annual Growth Rates in Percent								
		Scenario I			Scenario II			Scenario III		
		1982	1987	2000	1982	1987	2000	1982	1987	2000
Crops										
Palay	6705	2.68	2.64	2.25	2.66	2.50	2.25	2.25	2.41	1.48
Corn	3119	1.65	3.08	3.03	1.21	2.80	3.02	1.48	2.40	2.63
Sugar	2455 1/	(10.98)	(4.67)	(0.25)	4.12	2.62	2.07	4.12	2.62	3.43
Coconut	8619 2/	3.43	2.06	2.56	2.59	1.90	1.86	10.02	4.34	3.78
Bananas	954	2.84	2.80	1.84	2.84	2.88	2.28	2.84	2.88	2.28
Vegetables										
Leafy	152	6.11	4.96	3.17	4.85	4.96	3.17	4.85	4.27	3.17
Fruit	178	3.51	4.43	3.44	3.51	4.43	3.44	3.51	4.43	3.44
Roots	1150	4.23	3.59	1.54	4.23	3.59	1.54	4.23	3.59	1.17
Livestock										
Pork	493	5.58	4.11	3.92	4.80	4.11	3.87	5.61	4.25	4.02
Poultry Meat	57	4.45	2.40*	4.34	4.45	7.40*	4.34	4.44	7.63*	4.34
Eggs	115	4.64	4.05	4.63	4.64	4.05	4.63	4.64	4.05	4.63

1/ Centrifugal Sugar
2/ Million Nuts
* Appears to be the result of an input error.

Table 4. MAAGAP Estimates of Prices 1/ of Selected Agricultural Products, by Scenario, Philippines, 1976-2000
(Pesos per Kilo)

Commodities	Base 1976	Percentage Change from 1976 Base								
		Scenario I			Scenario II			Scenario III		
		1982	1987	2000	1982	1987	2000	1982	1987	2000
Crops										
Palay	1.02	-4.90	-0.98	-4.90	-2.94	+3.92	-0.98	+1.96	+8.82	+13.73
Corn	.53	--	+20.75	+56.60	+11.32	+20.75	+83.02	+7.55	+28.30	+171.70
Sugar	1.89 2/	-23.81	-23.81	-15.34	+4.76	+4.76	+4.76	+31.22	+31.22	+31.22
Coconut	2.08 3/	-20.67	-12.50	+47.60	-18.27	-9.13	+52.40	+25.96	+28.37	+70.19
Bananas	.56	-7.41	—	+35.19	-5.56	-3.70	+31.48	-7.41	-1.85	+31.48
Vegetables										
Leafy	1.37	-13.87	-17.52	+3.65	-10.22	-12.41	+3.65	-11.68	-10.22	+8.76
Fruit	1.60	-2.50	-8.75	+32.50	-2.50	-6.88	+33.13	-2.50	-6.88	+38.75
Roots	.73	-12.33	-12.33	+13.70	-9.59	-12.33	+15.07	-6.85	-9.59	+19.18
Livestock										
Pork	9.86	-10.75	+7.91	+74.24	-10.75	-8.42	+83.06	-34.10	—	+74.24
Poultry Meat	12.70	+0.15	-49.29[a]	+57.24	+1.26	-48.50	+61.89	-0.24	-50.94	+61.89
Eggs	13.76	-0.68	+8.57	+51.40	+2.20	+10.16	+51.40	-1.06	+8.26	+62.62

1/ In constant 1976 pesos.
2/ Centrifugal Sugar difference in prices is due to price ceiling in sugar which was not incorporated with the model.
3/ In copra prices.
a Appears to be the result of an input error.

REFERENCES

1. Gonzales Leonardo A., D. E. Kunkel. "DataBase for the MAAGAP Model" Journal of Agricultural Economics and Development Los Banos Philippines, Forthcoming March 1979.

2. Gonzales, Leonardo A., D. E. Kunkel and Jesus C. Alix. "MAAGAP the Adam National Model fo the Philippines", Journal of Agricultural Economics and Development Los Banos, Philippines VIII, No. 1, Jan. 1978, pp. 1-33.

3. Kunkel, David E. and L. A. Gonzales. "A Mathematical Planning and Policy Analysis Model for Philippine Agriculture". Proceedings Third Policy Conference Oct. 15-17, 1975, Center for Policy and Development Studies, Univ. of Philippines, Los Banos, 1976.

4. Kunkel, David E., L. A. Gonzales, J. C. Alix, Terisita L. Agbay, "The Philippine Agricultural Sector Under Alternative Prices of Sugar and Coconut Products, 1976-2000" Journal of Agricultural Economics and Development Los Banos Philippines, Forthcoming, March 1979.

5. Kunkel, David E., G. R. Rodriguez Jr., L. A. Gonzales, J. C. Alix. "Theory, Structure and Validated Empirical References of MAAGAP: A programing model of the Agricultural Sector of The Philippines", Journal of Agricultural Economics and Development, Los Banos Philippine, Forthcoming, March 1979.

AUTHORS

David E. Kunkel, Ag. Economist
Foreig Demand and Competition Division
Economc, Statistics and Cooperatives Service
Ph.D. Univ. of Wisconsin, 1972
1962-64 Peace Corps - Turkey
1971 - present ESCS/Econ
- Advisor to Philippine Ministry of Agriculture
Bureau of Agricultural Economics, Manila
Philippines 1972-78
- Returned to Foreign Demand and Competition Division
1979 - OGSM/PL480
Gil Rodrequez Jr., Bureau of Agricultural Economics
Ministry of Agricuture Philippines
Ph.D. Univ. of Purdue, 1978

Leonando A. Gonzales, Bureau of Agricultural Economics,
Ministry of Agriculture, Philippines
Ph.D. Univ of Tennessee 1976