PN-AAK-769
ISN = 18615

Rice Program 1980 Report

CIAT

CIAT is a nonprofit organization devoted to the agricultural and economic development of the lowland tropics. The government of Colombia provides support as host country for CIAT and furnishes a 522-hectare site near Cali for CIAT's headquarters. In addition, the Fundación para la Educación Superior (FES) makes available to CIAT a 184-hectare substation in Quilichao and a 73-hectare substation near Popayán. CIAT also co-manages with the Instituto Colombiano Agropecuario (ICA) the 22,000-hectare Carimagua Research Center in the Eastern Plains of Colombia, and carries out collaborative work on several of ICA's experimental stations in Colombia. Similar work is done with national agricultural agencies in other Latin American countries. CIAT is financed by a number of donors represented in the Consultative Group for International Agricultural Research (CGIAR). During 1981 these CIAT donors are: The Rockefeller Foundation, the Ford Foundation, the International Bank for Reconstruction and Development (IBRD) through the International Development Association (IDA), the Inter-American Development Bank (IDB), the European Economic Community (EEC), the International Fund for Agricultural Development (IFAD), the International Development Research Center (IDRC), and the foreign assistance agencies of the governments of Australia, Belgium, Canada, the Federal Republic of Germany, Japan, Mexico, the Netherlands, Norway, Spain, Switzerland, the United Kindgdom, and the United States. In addition, special project funds are supplied by various of the aforementioned donors, plus the Kellogg Foundation, and the United Nations Development Programme (UNDP).

Information and conclusions reported herein do not necessarily reflect the position of any of the aforementioned agencies, foundations or governments.

ISSN 0120-2286
CIAT Series No. 02ER1-80
September 1981

Rice Program Annual Report 1980

Centro Internacional de Agricultura Tropical, Apartado 6713, Cali, Colombia

Centro Internacional de Agricultura Tropical, CIAT
Apartado 6713
Cali, Colombia

ISSN 0120-2286
CIAT Series No. 02ER1-80
September 1981

Correct citation:
Centro Internacional de Agricultura Tropical. Rice Program 1980 Annual Report. Cali, Colombia, 1981. 39 p.

Oryza sativa/ *Rice* / *Training*/ *Weeding*/ *Germplasm*/ *Plant breeding*/ *Mutation*/ *Selection*/ *Resistance*/ *Pests*/ *Diseases and pathogens*/ **Sogatodes oryzicola**/ **Rhynchosporium oryzae**/ **Thanatephorus cucumeris**/ **Drechslera gigantea**/ **Pyricularia oryzae**/ *Hoja blanca*/ *Evaluation*/ *Introductions*/ *Early-maturing varieties*/ *Economics*/ *Production systems*/ *Yields*/ *Costs*/ *Income*/ *Biofertilizers*/ **Azolla filiculoides**/ **Azolla caroliniana**/

Print order: 500 copies.
Also available in Spanish.
This report is part of the series of 1980 Annual Reports produced in English and Spanish for the Cassava, Beans, Rice and Tropical Pastures Programs of CIAT.

Contents

	Page
Introduction	5
Breeding	7
Disease and Pest Resistance	7
Other Breeding Projects	9
Pathology	11
Disease Resistance	11
Management and Control of Disease	17
Disease Monitoring	19
Agronomy	21
Weed Control	21
Dynamics of Insect Populations	22
Nitrogen Fertilizers	22
Evaluation of Promising Rice Lines	23
Continuous Rice Production	23
Training	25
Irrigated Rice Production Training	25
In-Country Training Courses	26
Economics	27
Research Planning	27
Initial Results	27
International Rice Testing Program for Latin America	31
Results of Nurseries Distributed in 1978	31
Results of Nurseries Distributed in 1979	31
Germplasm Evaluation and Selection	33
Monitoring Tours and Individual Visits	34
Basic Seed Multiplication and Distribution	36
Program Publications	37
Personnel	39

Introduction

Rice, one of the most important foods in human nutrition, provides one-third of the calories in diets of Latin American people. The importance of rice is increasing in the region. In the past 15 years, the area planted to rice has increased 2.4% per year, while production increased 3.4% annually to equal the increase in demand. Of the 24 Latin American and Caribbean countries, only Chile, El Salvador and Honduras have not increased their total production over the period since 1963.

In most of Latin America rice production is increasing more rapidly than the demand for it. However, at current rates of population growth, rice production over the region will have to be doubled in the next two decades to satisfy the estimated demand in the year 2000. Table 1 illustrates the estimated contribution to Latin American rice production from the different cultural systems of the region and the principal problems of each system.

The objectives of the CIAT Rice Program are to improve and increase rice production and yields in Latin America in order to meet the demand for high-quality, low-cost rice. Program scientists are developing high-yielding varieties with good agronomic and processing characteristics and with resistance or tolerance to major disease and insect pests. Insofar as possible, cultural practices utilized require minimal inputs. This improved technology is transferred to national programs through the international trials network and in training courses.

Table 1. Areas, yields, production and specific production problems for various cultural systems for rice in Latin America, 1978.

Cultural system	Area (million ha)	Yield (t/ha)	Production (million t)	Specific problem
Subsistence upland	unknown	1.0	unknown	Planting of native varieties; no inputs or machinery used; dependence on hand labor; does not enter commercial markets.
Moderately favored upland	1.29	1.5	1.94	Drought period; soils of poor fertility; deficient soil preparation; diseases.
Unfavored, mechanized upland	3.50	1.0	3.50	Critical droughts; acid soils; Al toxicity; low seeding densities; diseases.
Favored, mechanized upland	0.37	2.4	0.89	Rotations required due to weed buildup; diseases, especially *Pyricularia oryzae.*
Rainfed	0.14	2.2	0.31	Water control; diseases.
Irrigated	2.10	3.5	7.35	Diseases, especially *Pyricularia oryzae;* cooking and milling quality; cold periods.

INTENTIONALLY
LEFT
BLANK

Disease and Pest Resistance

The cooperative rice breeding program between CIAT and the Instituto Colombiano Agropecuario (ICA) continues to have the objective of developing high-yielding varieties possessing good grain quality. Three major biological production constraints—rice blast *(Pyricularia oryzae)*, "hoja blanca" virus disease and the plant hopper *(Sogatodes oryzicola)*— are encountered in much of Latin America. Breeding for resistance or tolerance to these factors is being pursued vigorously in order to stabilize yields and production and reduce costs. Rice blast disease continues to be the most destructive constraint. Among the less important biological constraints, leaf scald *(Rhynchosporium oryzae)* and sheath blight *(Corticium sasakii)* prevail in Central America and some areas of Colombia and are receiving attention during evaluation, selection and screening of segregating populations and advanced breeding lines.

Resistance to Rice Blast

Stabilizing resistance to *Pyricularia oryzae* continues to be the major thrust of the Breeding Section. Possibilities of stabilizing blast resistance are being exploited through pyramiding of major genes, concentration of slow-blasting components, combination of slow-blasting characteristics with vertical genes, developing multilines, and crossing of susceptible varieties to accumulate residual fragments of resistance.

Field exposure of early generation segregating populations (F_2, F_3, F_4) to the Villavicencio, Colombia environmental conditions ensures a reasonably dependable preliminary screening not only against leaf and neck blast, but also against leaf scald, P deficiency and Fe toxicity. In addition, white belly, an undesirable grain quality component, expresses itself well at the higher temperatures of Villavicencio.

Pyramiding of major genes. Eleven pyramided lines selected from multiple crosses among 10 improved breeding lines carrying resistance factors from Tetep, Carreon, Dissi Hatiff, Colombia 1 and C 46-15 were extensively evaluated in regional trials at 14 Colombian locations. The same lines were also evaluated under diverse environmental conditions throughout Latin America through the International Rice Testing Program for Latin America (IRTP). Based on data from regional trials and the IRTP, four lines with good potential were identified among the 11 tested. Their performances are presented in Table 1.

The Colombian regional trials and the IRTP evaluations in Latin America are being repeated with the four potential candidates and five other new pyramided lines.

Table 1. Yield and grain quality of four pyramided rice lines tested at 14 Colombian locations. [1]

Line No.	White belly rating		Milling (%)		Mean yield
	Mean	Range	Whole grain	Total	(kg/ha)
5709	1.8	0.6-3.0	60	69	5749
5685	1.52	0.4-3.4	64	70	5537
5715	1.28	0.6-3.0	65	71	5436
5738	0.82	0.2-1.4	66	71	5232
CICA 8	1.81	0.6-3.6	56	68	5586

[1] All materials were resistant to rice blast and *Sogatodes*.

An additional 105 new pyramided lines originating from the same multiple crosses are being yield-tested in Monteria and Villavicencio. Of these, more than 20 identified as promising for blast resistance and grain quality will be evaluated in regional trials in 1981.

Lines 5006 and 5029 were identified as potential varieties for the Llanos of Colombia. Both were selected and reselected from the F_4 generation onwards at Villavicencio and carry blast resistance factors from Tadukan and Colombia 1. Compared to CICA 8, both lines have better lodging resistance and improved grain quality, although both yield less than CICA 8 (Table 2).

Table 2. Yield and grain quality of two rice lines in the Colombian Llanos. [1]

Line No.	White belly rating		Milling (%)		Mean yield (kg/ha)	
	Mean	Range	Head	Total	Irrigated	Upland
5006	0.5	0.4-0 6	63.9	71.5	5479	3731
5029	1.0	0.8-1.4	62.8	69.5	5040	3812
CICA 8	1.3	0.8-1.6	55 0	70.0	5990	4228

[1] All materials were resistant to rice blast.

A single genotype, CICA 8, is presently cultivated extensively in the Llanos over an estimated area of 50-60,000 ha. Despite their lower yield potential, the two new lines are being recommended specifically for the Llanos in order to diversify the very narrow genetic base in the region.

Seventy-four F_2 populations, each carrying blast resistance factors from two different donors, were planted in Villavicencio and another 20 at CIAT-Palmira. More than 30 of the populations were mass-selected and advanced to the F_3 generation. A further 12 F_3, 35 F_4 and 9 F_5 mass-selected, bulk populations were planted at Villavicencio. Eight of the F_3 populations were mass-selected and advanced to the F_4 generation. Five hundred single-plant selections made from the F_4 and F_5 bulks are being evaluated for quality.

Also planted were 2913 F_5 progenies originating from 40 different cross combinations; each combined resistance to blast from two of the following donors: Tetep, Colombia 1, Ca 902/b/3/3, P.I. 184675-2, S.M.L. 56/7, K 8 or Tapoocho-z. Of the 2700 progenies that matured, 402 were identified as promising. The promising progenies were single-plant selected; the rest were bulk-harvested and are being evaluated in large observation plots. A majority of the cross-combinations had Bg 90-2 as a parent.

The 402 promising progenies combined excellent plant type, good grain type and blast resistance. Single-plant selections originating from the same promising progenies were advanced to F_6 pedigree rows in Villavicencio for blast evaluation in the field and white belly evaluation in the laboratory.

Concentrating minor genes. Slow blasting, or the rate-reducing (horizontal) type of resistance, is believed to have these characteristics: longer latent periods from inoculation to infection and from infection to sporulation, fewer and smaller lesions and reduced sporulation. Single crosses among 12 varieties reported as having slow-blasting components and obtained from four countries were topcrossed to adapted susceptible varieties (CIAT Rice Prog. 1979 Ann. Rept.). From these crosses, 152 F_2 populations were planted and exposed in the field to rice blast at La Libertad, Villavicencio.

Most of the 12 parents having slow-blasting characters were typical tall upland varieties. Cross combinations involving the tall upland types did not recombine well. Very high sterility was observed in most of the crosses involving the Japanese upland variety Shensho and IRAT 10. IR 11-452 combined well in several crosses. Many of the topcrosses to the Camponi/IRAT 8 single cross were promising.

Based on neck infection, plant and grain type, 70 of the 152 F_2 populations were mass-selected for advancement to the F_3 generation in Villavicencio.

Combining major and minor genes. A combination of major and minor genes is believed to increase the effectiveness of each against blast, by providing better stability and increased longevity.

Seven single crosses made for the slow blasting project were topcrossed to six advanced breeding lines believed to have major gene resistance (CIAT Rice Prog. 1979 Ann. Rept.). Sixty F_1 populations originating from these crosses have been planted. The project was expanded during the year by making 13 new single crosses among slow-blasting parents and then topcrossing them to six additional lines exhibiting vertical type (major gene) resistance.

Backcrossing to multiply slow-blasting characters. Varietal resistance to rice blast breaks down frequently, even among varieties derived from crosses having parental sources for broad-spectrum resistance. Such breakdowns often have been attributed to the dilusion of the genetic complement of the donor parents through segregation; thus, the progeny fails to inherit an adequate amount of the donor's resistance factors.

A new project was initiated in 1980 to exploit the possibilities of transfering an adequate amount of the genetic complement of tall, broadspectrum parents to dwarfs through a single backcross. Two tall and one dwarf variety from Suriname (Tapuripa, Costa Rica and Camponi) and a tall donor (IAC 25) from Brazil are being crossed and backcrossed once to 14 genetically diverse dwarf materials with good yield potentials.

Multilines. A combination of phenotypic uniformity with genetic diversity through multilines has been advocated as a barrier against the rapid spread and

inoculum multiplication of a pathogen, rather than as a control measure. Although the concept is sound, the problems of development and subsequent management of multilines restrict their widespread use and ready availability.

Several F_2 populations of the third backcross (B_3 F_2 generation) of the expanded multiline project with seven geographically diverse sources of blast resistance (CIAT Ann. Rept. 1977) were planted at La Libertad, Villavicencio. Because a low level of foliar resistance characterizes many of the populations, it is questionable whether an exploitable level of resistance can be carried through three backcrosses.

Crossing susceptible varieties. Crosses among susceptible varieties were attempted primarily to gradually build up higher levels of blast resistance by combining, through recurrent selection, the very low levels of resistance associated with susceptible varieties. The F_2 populations from 66 single crosses among 12 susceptible varieties (CIAT Ann. Rept. 1978) were exposed to natural blast infection in Villavicencio. Many of the populations, severely affected by blast, manifested very few residual fragments of resistance. Segregants characterized by lower levels of resistance were observed in 20 F_2 populations. However, it may be too early to conclude that the low level of resistance associated with some segregants was a manifestation of resistance or absence of matching races. Over 20 F_2 populations were mass-selected and composited, with 10-20 panicles of low-level resistant segregants harvested from each population. The composite was advanced to the F_3 generation in Villavicencio for further observation.

Other Breeding Projects

Earliness

In important rice-producing zones in Colombia (such as Tolima and the North Coast) farmers prefer early-maturing varieties (100-110 days). Eight hundred fifty-nine quality-evaluated, single-plant selections were planted and observed in F_5 pedigree rows at CIAT. Selections originated from 13 different three-way and double crosses involving four early maturing parents (IR 36, 5461, IR 22 and CICA 7) with three different sources of blast resistance (Tetep, Colombia 1 and C 46-15). Progenies combining excellent grain quality, good plant type and resistance to lodging and blast were identified and 240 were advanced to observation plots in Nataima, Tolima. Lines maturing at least 10 days earlier than CICA 9 were identified among the selected 240 progenies. Over 700 single-plant selections made from the promising progenies were advanced to F_6 pedigree rows in Nataima and Villavicencio to check for white belly expression.

Another 696 quality-evaluated selections were planted in F_5 pedigree rows in Nataima; they were derived from 16 cross combinations, with Tetep and CICA 7 as resistance donors for blast and CICA 4 for earliness. Over 75 progenies identified as promising under Nataima conditions were single-plant selected and advanced to F_6 pedigree rows there for further evaluation.

Rainfed or upland rice culture systems prevail in more than 70% of the rice area in Latin America. In a current project, single crosses among five upland varieties and two Suriname varieties were topcrossed to nine varieties adapted to both rainfed and irrigated conditions. The F_1 populations from 46 three-way cross combinations were planted and harvested for distribution to countries with facilities and personnel to handle evaluations of the segregating populations. These crosses should enable the participating countries to screen the populations under local environmental conditions and to identify stress-tolerant segregates for irrigated, rainfed or upland conditions (CIAT Rice Prog. 1979 Ann. Rept.).

Improvement of Bg 90-2

The wide adaptability, high yield, excellent plant type and good early vigor of Bg 90-2—if combined with blast resistance and better grain quality—should ensure its wide acceptability and commercial popularity.

Twenty F_5 lines from two bakcrosses reported last year (CIAT Rice Prog. 1979 Ann. Rept.) were yield-tested in CIAT-Palmira against the check varieties Bg 90-2 and CICA 8. Yield data of five of the best lines are presented in Table 3.

Table 3. Yield and grain quality of five backcross lines of Bg 90-2 (Bg 90-2/3 x Tetep) at CIAT-Palmira.

Line No.	White belly rating range	Reaction to rice blast	Yield (kg/ha)
7222	0.8-1.2	Resistant	8594 (116) [1]
7181	0 6-1.2	Resistant	8455 (114)
7153	0.2-0.6	Resistant	7569 (103)
7152	0.2-0.4	Resistant	7239 (98)
7140	0.2-0.6	Resistant	6354 (86)
Bg 90-2	2.0-2.5	Susceptible	7396 (100)
CICA 8	0.6-0.8	Resistant	7101 (96)

[1] Figures in parentheses are percentage yields compared to the control.

Several lines combined blast resistance with improved grain quality; white belly ratings range from 0.4-1.4, compared to a Bg 90-2 rating of 2.0-2.5 under the environmental conditions of CIAT-Palmira. The grain quality and the blast resistance of the more promising lines are now being evaluated at Villavicencio. Of the 20 lines, 12 continue to be resistant at Villavicencio and the rest are moderately resistant. The grain of the harvest from Villavicencio is being evaluated for white belly ratings.

Improvement of CICA 8

Table 4. Yield and grain quality of nine backcross lines of CICA 8 (CICA 8/2 x Bg 90-2) with improved lodging resistance at La Libertad, Villavicencio, Colombia.

Line No.	White belly rating	Yield (kg/ha)
M-1012	0.0	7291
M-1013	0.2	6458
M-1003	0.2	6458
M-1009	0.0	6059
M-1011	0.2	6041
M-1008	0.0	5800
M-1005	0.2	5659
M-1004	0.0	5364
M-1001	0.0	5243
CICA 8	0.8	4974

Although CICA 8 is widely adapted and high-yielding, moderate lodging, especially under upland and rainfed conditions, is a noteworthy defect. A total of 46 backcrossed lines (CICA 8/2 x Bg 90-2) were included in preliminary yield trials, with 10 lines tested at Villavicencio and 26 lines at CIAT-Palmira. Nine lines exhibited improved lodging resistance and out-yielded CICA 8 (Table 4).

Mutation Breeding

Invariably, broad-spectrum donor parents for blast resistance are tall, weak-strawed and susceptible to lodging. Because they represent the typical undesirable type, their usefulness as recurrent parents is severely limited. Backcrossing to tall donors, although effective in recapturing the gene complement for resistance, would result in an undesirable, poorly yielding plant type. Dwarfing such tall donors through radiation-induced mutations was attempted to convert them into suitable recurrent parents.

The X_2 generation of 14 irradiated varieties (CIAT Rice Prog. 1979 Ann. Rept.) was planted and Tetep, Tadukan, Moroberekan, O.S. 6, IAC 25 and Tapuripa matured during the year. Dwarfs were identified in all six varieties.

Testing of Introductions

Some 240 advanced breeding lines—203 from the International Institute for Tropical Agriculture (IITA) and 37 from the International Rice Research Institute (IRRI)—were observed during the year. All of the African lines were found to be tall, low-tillering types unsuitable for irrigated culture. Lines from IRRI lacked early vigor. A few of them will be tested in the Llanos.

The main focus of the Pathology Section's research in 1980 was the intensive application of improved methods for disease screening, especially at La Libertad, near Villavicencio, Colombia. Using these methods, varying levels of resistance to the major rice diseases—rice blast, leaf scald and sheath blight—were differentiated in breeding materials.

The development of new races of the rice blast fungus facilitated the identification of the slow-blasting character in several lines and cultivars.

Basic information was obtained on the management of blast, which can be used to evaluate resistance and to control the disease.

Disease monitoring and evaluating the susceptibility of basic germplasm to minor or new diseases in Latin America were continued.

Disease Resistance

Reliable, simple evaluation techniques are required for the integrated breeding efforts being made to develop varieties with higher levels of durable disease resistance. Proper manipulation of disease is necessary to ensure adequate pressure, even in areas known to be favorable testing sites.

Rice Blast

Blast nursery test. CIAT used the blast nursery test to screen entries for high susceptibility to leaf blast, rather than to identify types of resistance. Nursery tests at La Libertad benefitted from prolonged favorable climatic conditions and abundant natural inoculum.

A total of 8708 breeding lines was evaluated at La Libertad and CIAT-Palmira (Table 1). Almost half of the breeding lines were resistant to leaf blast at CIAT, while 31% of the entries were resistant at La Libertad. Many entries derived from crosses involving CICA 7 were resistant at La Libertad.

Reactions of the race differential varieties indicated the differences in pathogenicity of blast fungus in both locations (Table 2). Eight of ten genes for rice blast resistance identified in Japan are ineffective against the blast fungus at La Libertad.

Table 1. Summary of evaluations for resistance in blast nurseries at two locations.

Group	No. of entries			Total
	Resistant	Intermediate	Susceptible	
CIAT-Palmira				
Breeding lines	4195	4102	181	8478
IRTP entries	1015	719	9	1743
Pathology accessions	158	130	2	290
La Libertad				
Breeding lines	72	150	8	230
IRAT varieties	18	8	0	26
USA lines	86	108	6	200
Japanese varieties (field resistant)	20	29	1	50
Korean lines	16	76	8	100
Pathology accessions	138	361	50	549
Total				11,666

Slow-blasting cultivars in the blast nursery. Several cultivars considered to have the slow-blasting character were evaluated in blast nurseries at CIAT-Palmira, Villavicencio and in Panama. Reactions seldom exceeded grade 5 and typically varied from 1 to 4 (Table 3). IRAT 8 did not demonstrate the slow-blasting character to leaf blast in Panama.

Table 2. Reaction of race differentiated rice varieties in blast nurseries at two locations

Differential Variety[1]	Reaction[2] at. CIAT-Palmira	ICA-La Libertad
Group A		
Raminad Str. 3	●	▲
Zenith	●	●
NP-125	●	▲
Usen	▲	▲
Dular	●	▲
Group B		
Shin 2 (Pi-K^{s}).[3]	▲	▲
Aichi Asahi (Pi-a)	▲	▲
Ishikari-shiroke (Pi-i)	▲	▲
Kanto 51 (Pi-k)	▲	▲
Tsuyuake (Pi-m,k)	▲	▲
Fukunishiki (Pi-z)	●	●
Yashiro mochi (Pi-ta)	▲	▲
Pi No. 4 (Pi-ta^{2})	●	▲
Toride 1 (Pi-z^{t})	●	●
Group C		
IR 1905-81-3-1	●	▲
IR 34	●	●
IR 1529-680-3	▲	▲

[1] Group A Cultivars from international differentials; Group B: Japanese differentials, Group C Entries from IRRI differentials
[2] ●=resistant; ▲=susceptible
[3] Identified genes for resistance to rice blast in Japan

Table 3 Reaction of slow-blasting rice cultivars in blast nurseries at three locations

Cultivars	Reaction at: CIAT-Palmira	ICA-La Libertad	Panama[1]
Tapuripa	3 (4) [2]	1 (3.4)	2
Ciwini	1	1 (3)	2
Camponi	1	4	1
Ceysvoni	2 (3)	2 (3)	1
Azucena	3, 4	4	4
LAC 23	1 (3.4)	4	1
IAC 25	2 (3)	4	-
OS 6	3 (4)	2 (3)	2
IRAT 8	4	4 (5)	6
IRAT 10	1 (3.4)	1 (3)	-
IRAT 13	1 (3)	3	2
IRAT 106	-	3	-
IRAT 112	-	1	-
IRAT 116	-	2 (3)	-
IRAT 133	-	1	-
IRAT 140	-	3 (4)	-
IRAT 146	-	1 (3)	-
Moroberekan	1	3	2
6383	-	3	-
RS 25T	-	3	-
IR 11-452-1-1	3 (4)	4 (5)	2
Sensho	2 (4)	2 (3)	4

[1] Tested in Tocumen, Panama, October 1979.
[2] Standard evaluation scale; scale in parenthesis indicates the presence of a few lesions and leaves showing different reactions.

Field evaluation of blast resistance. To evaluate slow-blasting characters and panicle blast, promising breeding lines, commercial varieties and resistance donors were planted under heavily fertilized upland conditions to ensure disease. Replications were made over time to note the effect of climatic change on disease development. Lines 5685, 5738 and 5698 performed better than CICA 8 (Table 4). PI 184675-2 does not appear to be resistant, especially to panicle blast (Table 5).

The experiment showed the following:

- Significant varietal differences in disease rate and panicle blast were observed in materials that were similar in leaf infection (Tables 4 and 5).
- There was a high correlation between disease rate of leaf infection and panicle infection at La Libertad (Table 6).

It is almost impossible to measure the apparent infection rate in the presence of heavy natural inoculum, particularly during the middle stages of disease development. Therefore, the disease rates may be overestimated for slow-blasting cultivars and underestimated for highly susceptible cultivars.

Table 4. Evaluation of breeding lines, commercial varieties and donors for blast resistance, ICA-La Libertad, Colombia.

Group	Leaf blast: Average assessment (%)[1]	Daily disease rate[2]	Panicle blast[3]
Breeding Lines			
5685	0.15 b[4]	0.036 efghi	0.30 l
5738	1.29 b	0.044 defghi	0.87 l
5698	0.94 b	0 029 fghi	10.05 jkl
5728	0.91 b	0.057 defghi	21.77 ghij
5854	0.48 b	0.101 abcd	24.89 ghi
5715	0.27 b	0.082 bcdef	33.91 fg
5709	2.68 b	0.069 bcdef	35.56 efg
5684	2.22 b	0.117 ab	48.95 cde
5732	1 92 b	0 155 a	57.63 bc
5734	1.50 b	0.075 bcdef	71.01 a
5852	1 29 b	0.095 bcde	72.23 a
Commercial varieties			
CICA 4	15.29 a	0 087 bcdef	53 08 bcd
CICA 9	20 46 a	0.087 bcdef	48 58 cde
CICA 8	3 95 b	0.068 bcdef	26.32 gh
IR 22	15.29 a	0.062 bcdef	41 03 def
LSD	5.14	0.05	11.47

[1] Average assessment over three replicates
[2] Regression coefficient of logit-transformed disease curve
[3] Severity of panicle infection: 0=no infection, 100=heavy infection.
[4] Means in each column that are followed by a common letter are not significantly different at the 5% level, by Duncan's Multiple Range Test

Table 5. Evaluation of donor cultivars for blast resistance in the field, ICA-La Libertad,-Colombia.

Cultivars	Leaf blast			Panicle blast[3]
	Blast nursery[1]	Average assessment	Daily disease rate[2]	
Ta-poo-cho-z	1	0.05 b[4]	0 i	0.18 l
Colombia 1	1 (3.4)	0.08 b	0 i	0.56 l
Moroberekan	2 (3)	0.33 b	0 031 fghi	0 89 l
Mamoriaka	4	1.40 b	0.018 ghi	4.55 kl
Dissi Hatil	5	6 34 b	0.049 cdefghi	11.56 ijkl
Tadukan	3.4	1.16 b	0.085 defghi	14 87 hijkl
Ca 902/b/3/3	4	1 78 b	0.044 bcdef	16.45 hijk
Carreon	2 (3)	0.19 b	0.006 hi	21.83 ghij
Tetep	3.4	1.11 b	0.034 fghi	28.91 fgh
Dawn	2 (3)	0.83 b	0 035 efghi	33 06 fg
C 46-15	5	0.58 b	0 109 abc	34.35 fg
PI 184675-2	5	4.27 b	0.05 cdefghi	63.94 ab

[1] Standard evaluation scale 0-2=resistant, 3-5=intermediate, 6-9=susceptible Scale in parenthesis indicates the presence of a few leaves showing different reactions

[2] Regression coefficient of logit-transformed disease progress over a period of observation

[3] Severity 0=no infection, 100=heavy infection

[4] Means in each column that are followed by a common letter are not significantly different at the 5% level by Duncan's Multiple Range Test. Comparisons include the entries in Table 4.

Table 6. Linear correlations for evaluation parameters for rice blast development, at ICA-La Libertad. [1]

Parameter	Panicle blast	Leaf blast				
		Initial infection,	Maximum infection,	Terminal infection,	Average assessment,	Disease rate,
	A	B	C	D	E	F
B	0 122					
C	0.359	0.232				
D	0.366	0.665**	0.932**			
E	0 294	0 903**	0.986**	0.888**		
F	0.637**	0.188	0.258	0 231	0.193	

[1] Observations of 28 cultivars during three different planting periods

Disease dispersal. Slow-blasting cultivars are believed to limit the spread of disease. This concept was tested at CIAT-Palmira and La Libertad using several cultivars known to be slow-blasting.

Three distinctive disease patterns were observed among the entries (Fig. 1):

Pattern I. Rapid disease build-up near the source of inoculum, sharp initial decrease with distance from the inoculum source, leveling-off and heavy terminal disease. CICA 4, IR 22 and IRAT 8, Suzuhara Mochi and Fanny showed this pattern.

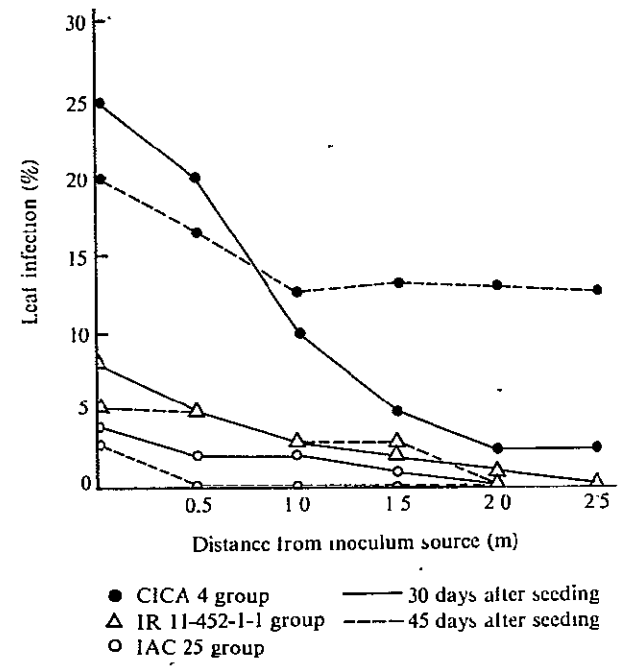

Figure 1 *Leaf blast development at different distances from inoculum source at CIAT-Palmira.*

Pattern II. Intermediate disease build-up near the source of inoculum and moderate decline in disease with distance. IR 11-452-1-1, Sensho, O.S.6 and Azucena were in this group.

Pattern III. Little disease build-up near the inoculum source and slow decline with distance. IAC 25 and Tapuripa demonstrated this pattern.

All of the known slow-blasting cultivars fit Patterns II or III, except Suzuhara Mochi, which is considered to be susceptible.

Disease gradients over distance were not observed at La Libertad, due to large amounts of natural inoculum.

Evaluating slow-blasting character in early generations. Identifying the slow-blasting character in early generations, especially with F_2 single plants, involves several problems.

A long-term experiment was begun to determine whether a method suggested by other scientists[1] can be applied in early generations to detect slow-blasting characters.

Seedlings from three populations—P2359 (Tapuripa/CICA 4), P2379 (CICA 4/Camponi) and P2387 (IR 11-452-1-1/CICA 4)—were transplanted in lowland conditions and grown under upland conditions. Individual plants were observed at maximum tillering, booting, initial flowering and maturity. A predetermined grouping based on comparisons with standard susceptible plants was used as a selection criterion (Table 7).

The progenies of Tapuripa, Camponi and IR 11-452-1-1, all known slow-blasters, performed better than CICA 4, a common susceptible parent (Table 8). Plant materials were pedigree and bulk-harvested for the following generation. The same principle will be applied to evaluate F_2 lines in continuing studies.

Table 7. Selection criteria for slow-blasting of single rice plants in early generations.[1]

Classification	Leaf		Panicle	
	Tillering	Booting	Initial flowering	Maturity
No infection	N	N	N	N
Resistant	N	N	N	L
	N	N	L	L
	N	L	N	L
	N	L	N	N
Intermediate	L	L	L	L
	L	L	N	L
	N	L	L	L
	L	L	N	N
Susceptible	S	S	S	S
	L	S	S	S
	L	L	L	S
	L	S	L	S
	S	S	L	S
	S	S	L	L
	S	S	N	L
	L	L	N	S

[1] N=No infection, L=Less infection than the standard plants; S=Same as the standard plants which have maximum amount of disease at the time of evaluation.

Table 8. Performances of F_2 rice populations and their parents for slow-blasting.

Group	Number of plants				Total
	No infection	Resistant	Intermediate	Susceptible	
P 2359					
(Tapuripa/CICA 4)[1]	44 (8.4)[2]	114 (21.9)	338 (64.9)	25 (4.8)	521
Tapuripa	8 (40)	6 (30)	6 (30)	0	20
P 2379					
(CICA 4/Camponi)	20 (3.7)	54 (9.9)	434 (79.3)	39 (7.1)	547
Camponi	3 (15)	11 (55)	4 (20)	2 (10)	20
P 2387					
(IR 11-452-1-1/CICA 4)	10 (1.8)	93 (17.1)	392 (71.9)	50 (9.2)	545
IR 11-452-1-1	0	4 (20)	13 (65)	3 (15)	20
CICA 4	0	0	12 (60)	8 (40)	20

[1] Parents of the populations [2] Values in parentheses are percentages.

Leaf Scald

Damage from leaf scald *(Rhynchosporium oryzae)* in Latin America is believed to be increasing. It is not known whether this is due to increased use of nitrogen fertilizers, better survival and increase of the fungus on plant residues of high-yielding varieties or gradual build-up of more fitting pathotypes.

New evaluation parameter. Conventional evaluation methods do not detect varietal differences in the ability to restrict the growth of the fungus. The problem is acute in field trials where uniform adjustment of the initial inoculum is very difficult. Period evaluations were made to quantify the rate of disease development of several varieties (Table 9). Lines 5685, 5698 and 5709 scored better than other lines although they initially had somewhat more disease. Other lines had less initial and final disease but greater rates of disease increase.

[1] Loegering, W Q *et al* 1976. Rating general resistance on a single-plant basis Phytopathology 66 1445-1448.

Table 9. Evaluations for resistance to leaf scald under upland conditions, ICA, La Libertad, Colombia.

Identification	Leaf area affected (%)[1]				Average assessment (%)	Daily disease rate[3]
	70 DAS[2]	80 DAS	90 DAS	100 DAS		
5738	7.1[4]	9.5	31.5	37.0	21 3	0.076
5854	5.3	12.6	29.5	39.0	21.6	0.084
5685	11.6	14.1	24.0	38.0	21.9	0.053
5715	9.3	12.0	36 0	34.0	22.8	0.063
5698	11.3	14.8	33.3	35.5	23.7	0.054
5728	12.4	15.9	29.5	47.0	26 0	0.063
5709	15.1	14.8	34.5	40.5	26 2	0.051
5684	5.1	21.4	34.5	52 0	28.3	0 097
5852	8.6	15.7	40 0	50.0	28.6	0 084
Colombia 1	4.6	8.2	19.2	25 0	14.3	0.068
Tadukan	6.8	6.9	20.1	33.5	16 8	0.070
Ta-poo-cho-z	8.3	10.6	19.8	30.5	17.3	0.055
Mamoriaka	8.5	16.4	28.4	32 5	21.5	0.056
Moroberekan	9.5	8.4	31.0	38.3	21.8	0 069
Ca/902/b/3/3	8.9	10.3	29.8	41.0	22.5	0.072
Carreon	9.3	18.8	40.0	35 0	25.8	0.060
Dissi Hatil	10.1	10.0	37.3	46.0	25.9	0.078
CICA 8	6.1	17.1	24.8	41 0	22 3	0.076
Average					22.7	0.068

[1] Observation was made on the upper part of the plants
[2] DAS=Days after sowing
[3] Regression coefficient of logit-transformed disease curve.
[4] In conventional system, 0-5=highly resistant, 6-15=resistant; 16-25=intermediate; more than 25=susceptible.

Differential interaction. Results from the VIOAL-R (International Rice Observational Nursery-Leaf Scald) revealed a differential interaction with testing sites (Table 10). The cause of these differences is not yet known.

Table 10. Differential reactions to leaf scald on rice, at six locations.[1]

Identification	Disease scale[2]					
	Colombia	Panama[3] T	Panama[3] I	El Salvador	Guatemala	Honduras
IET 6056	6	5	5	5	4	1
IR 4505-4-1-2	3	3	7	3	7	1
IR 9575 Sel	6	3	5	5	3	7
IET 6581	3	7	5	3	3	1
CICA 8	3	3	5	7	3	3
IR 42	3	3	3	3	3	1
Damaris	1	3	1	1	3	1
IR 1802-52-2-4-1	2	2	1	3	2	1
Sirandah Silungkang	6	5	7	-	5	5

[1] Data from VIOAL-R, 1979, IRTP.
[2] Standard evaluation scale 1-2= resistant; 3-4= moderately resistant, 4-5= moderately susceptible, 5-9=susceptible
[3] T=Tocumen; I=IDIAP.

Sheath Blight

Table 11. Evaluation scale and weight for artificial inoculation of the sheath blight pathogen of rice

Grade[1]	Weight
1 ●	9
1 ▲	8.5
1 ■	8
2 ●	7
2 ▲	6.5
2 ■	6
3 ●	5
3 ▲	4.5
3 ■	4
4 ●	3
4 ▲	2 5
4 ■	2
5 ●	1
5 ▲	0.5
5 ■	0
6[2]	0

[1] The number indicates the sheath position where the uppermost lesion is located. The position of the flag sheath is 1. The number increases as the sheath position descends, ● =higher than the middle point; ▲=middle point; ■=lower than the middle point.
[2] Lower than the fifth sheath

The irregular natural occurrence of sheath blight *(Thanatephorus cucumeris)* in testing sites and a cumbersome evaluation scale make it difficult to evaluate varietal resistance to this disease.

A simple but useful scale was developed to evaluate artificial inoculations or field infections (Table 11). The disease index, a weighted value of disease grade, is computed as follows:

$$\text{Disease index} = \frac{\text{grade frequency} \times \text{weight equivalent}}{\text{total number of tillers observed}}$$

Artificial inoculation of 70-day old plants was used to test the index. Evaluation was made after initial flowering (Table 12). The rating scale coincides with the field evaluation made at Tocumen, Panama.

Table 12. Reactions of rice lines and varieties to sheath blight.

Identification	Artificial inoculation[1]		Field observation[2]
	Disease index	Classification	
5685	1 89	MS	6.3
5709	1 67	MS	-
5715	1.42	MS	6.3
5738	2.54	S	6.0
5854	0.63	MR	5.7
5002	2 21	S	-
5009	0.75	MR	-
5010	1.58	MS	-
5029	1.38	MS	-
CICA 7	4 30	HS	-
CICA 8	1.71	MS	4.3
IR 22	4.08	HS	-
Pankaj	0.63	MR	2.7
IR 1487-194-5-3-2	5.67	HS	7.0

[1] 0=resistant (R);0 1-1=moderately resistant (MR); 1.1-2=moderately susceptible (MS); 2 1-4=susceptible (S), greater than 4=highly suceptible (HS).
[2] Preliminary data from VERAL, Tocumen, Panama, average value of three replications using standard evaluation scale.

Bacterial Leaf Blight

Bacterial leaf blight was reported in Colombia and Panama in 1975. Since this disease is a potential threat, artificial inoculation with isolate 1186 was performed to evaluate breeding lines. Several were resistant to this particular isolate. Among the commercial varieties grown in Colombia, only CICA 7 and IR 22 were rated resistant.

Eyespot Disease

Since CIAT's original identification of this new disease *(Drechslera gigantea)* in Colombia, Panama and Peru, eyespot has been found in Mexico, Guatemala and Honduras, where it severely affects certain cultivars.

Evaluation of resistance by artificial inoculation. Using a monoconidial isolate, 75 cultivars and breeding lines were inoculated artificially. CICA 6 and 7 were highly susceptible, while CICA 9, IR 22, IR 8 and Bluebonnet 50 were highly resistant.

Origin of susceptibility. Several susceptible lines or cultivars—such as CICA 7, CICA 6, CICA 4 and CICA 8 and lines 5709, 5715 and 5734 have IR 930 as a common parent. To trace the origin of susceptibility, several parents and their progenies were artifically inoculated with five monoconidial isolates from CICA 7, CICA 6 and lines 5715. The susceptibility was inherited from Mong Chin Vang A, through IR 12 and then IR 930 (Fig. 2). It appears that susceptibility to this disease is genetically dominant over resistance.

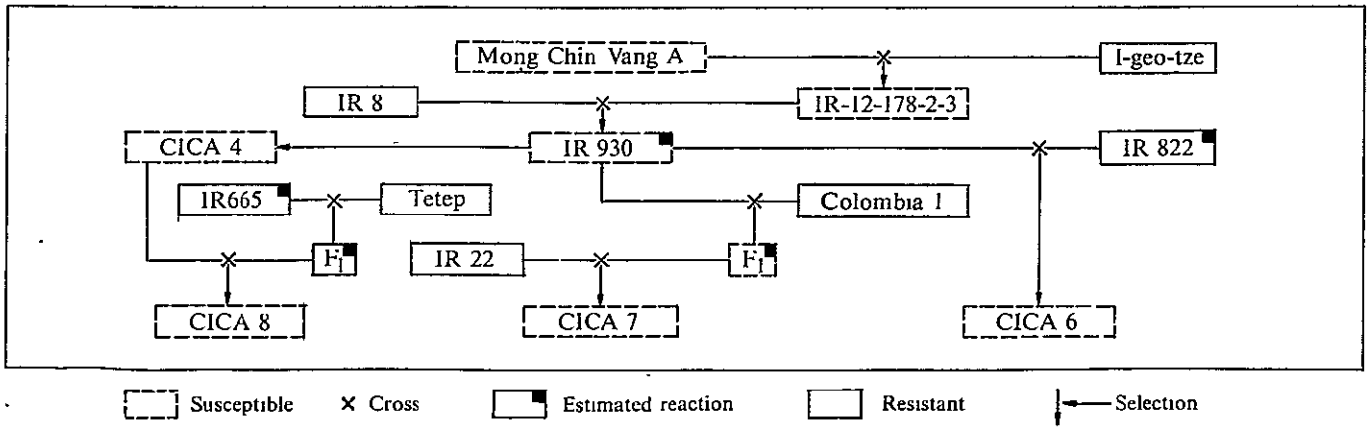

Figure 2. *The derivation of susceptibility to eyespot disease on rice caused by* Drechslera gigantea.

Crown Sheath Rot

This disease, caused by *Ophiobolus oryzinus,* is commonly observed in rice fields in Colombia, Panama and Peru. It usually damages sheaths and leaves near maturity. No evaluation method is available since it is considered a minor disease. A preliminary trial was done to evaluate reactions using the inoculation technique that is used for sheath blight. Although lesion length and percentage of the affected leaves might be useful evaluation parameters, the slow progress of disease and the natural senescence of leaves pose difficulties in evaluation (Table 13).

Table 13. Reactions of several rice varieties to crown sheath rot in artificial inoculation.[1]

Variety	Tillers diseased (%)	Lesion length (cm)	Leaves affected (%)
Inti	82.4	4.3	21.4
IR 8	81.4	4.1	24.2
CICA 4	76.4	5.1	25.7
Bluebonnet 50	92.6	5.1	26.5
CICA 8	85.1	5.4	29.3
Yushin	84.7	6.5	33.1

[1] Inoculation was made at 60 days after sowing, and evaluation was made 30 days thereafter.

Management and Control of Disease

Blast development in irrigated and upland conditions. Although climatic conditions at La Libertad favor blast development during the first rice growing season, rice grown under irrigated conditions has much less disease than upland rice. An experiment was designed to increase leaf blast in irrigated rice. Because applying lime to lower Al toxicity is a common practice in the area, a lime treatment was included.

Regardless of the rice variety or lime treatment, upland plots had more disease (Fig. 3). In them, resistance levels of Tetep and CICA 8 could be clearly distinguished; these levels were similar in flooded plots (Fig. 4). The effect of lime on disease development in flooded conditions was significant with CICA 4, but not with CICA 8 and Tetep. Liming had little effect in upland conditions.

The effect of lime on blast in irrigated plots is ascribed to better plant nutrition; this leads to increased vegetative growth that provides a more favorable microclimate.

Figure 3. *Natural blast infection on CICA 4 grown under irrigated (right side) and upland (left side) conditions at ICA-La Libertad, 1980.*

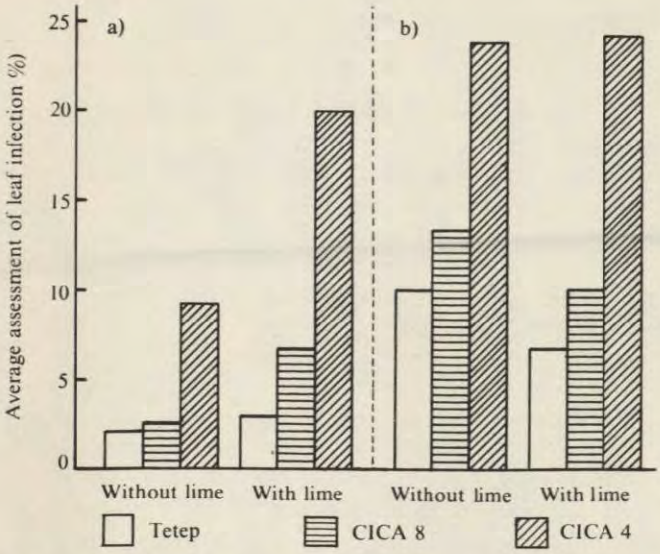

Figure 4. *Leaf blast development under irrigated and upland conditions with and without lime application, ICA-La Libertad, 1980. a) Irrigated; b) Upland.*

Yield loss due to panicle blast. The evaluation of panicle blast is complicated by both partial and complete neck infection. Thus, the disease value does not accurately assess the severity and total amount of disease. To correct this, the percentage of unfilled grain was added to the evaluation scale, and each grade in the scale was weighted to reflect the severity of neck infection. To test the revised scale, the relation between panicle blast severity and yield was studied with CICA 4 and CICA 9 in upland plots.

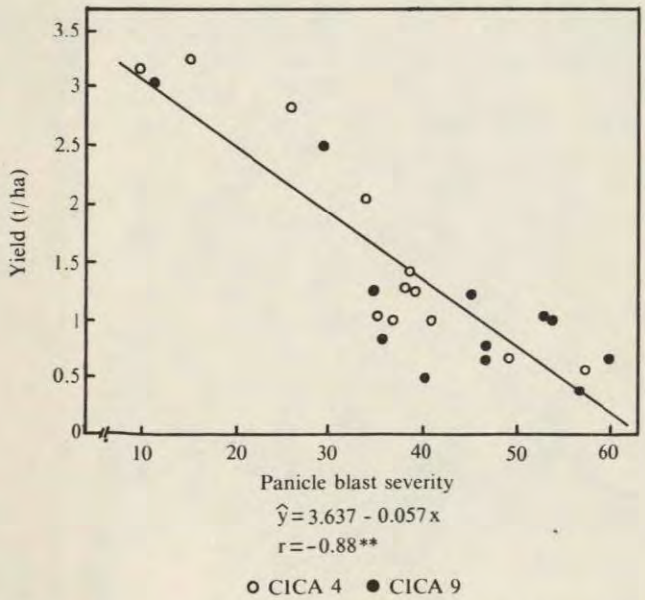

Figure 5. *Effect of different levels of panicle blast on rice yields under upland conditions, ICA-La Libertad, 1980 A.*

Various levels of disease were induced by applying a fungicide at different stages of growth until initial flowering. Heavy leaf scald incidence occurred uniformly in all plots.

There was a highly significant negative linear relationship between yield and panicle blast despite interference of other constraints such as leaf scald (Fig. 5). However, a tendency towards underestimation at lower levels of infection and overestimation at high levels was observed. This variance will be studied to find if it is due to human error or to incorrect weighting of the grades of the scale.

Yield reduction per unit change of severity may vary among varieties. This will be studied further.

Timing of fungicide applications to control panicle blast. Colombian farmers apply fungicide two or three times during flowering to control panicle blast. Usually the first application is made at the initial flowering period.

Often, the panicle is severely affected without any visual blast symptoms except infection on the internode located below the neck. This observation led to the assumption that fungicide application before flowering may be more effective than after flowering. CICA 4 and CICA 9, planted in upland conditions, were sprayed with Tricyclazole (5-methyl -1,2,4- triazolo (3,4-6) benzothiazole), 75% WP, a systemic fungicide.

Results indicated that application at the booting stage better protected the panicle and increased yields (Table 14).

Table 14. Efffect of timing of fungicide applications on severity of panicle blast and on yield of two rice varieties under upland conditions, ICA-La Libertad, Colombia.

Growth stage	CICA 4		CICA 9	
	Panicle blast[1]	Yield[2] (t/ha)	Panicle blast[1]	Yield[2] (t/ha)
Booting stage	17.86	3.46 a	13.21	2.92 a
Initial flowering	26.95	3.14 ab	19.16	2.51 b
10 days after flowering	34.06	2.65 bc	33.82	2.03 c
Untreated control	42.05	2.35 c	46.61	1.61 d

[1] Panicle blast severity: 0=no infection; 100=heavy infection.

[2] Average of three replications. Means within columns and followed by the same letter are not significantly different at the 5% level by Duncan's Multiple Range Test.

Early application might also decrease the infection on the collar of the flag leaf (Fig. 6), which is frequently associated with neck infection.

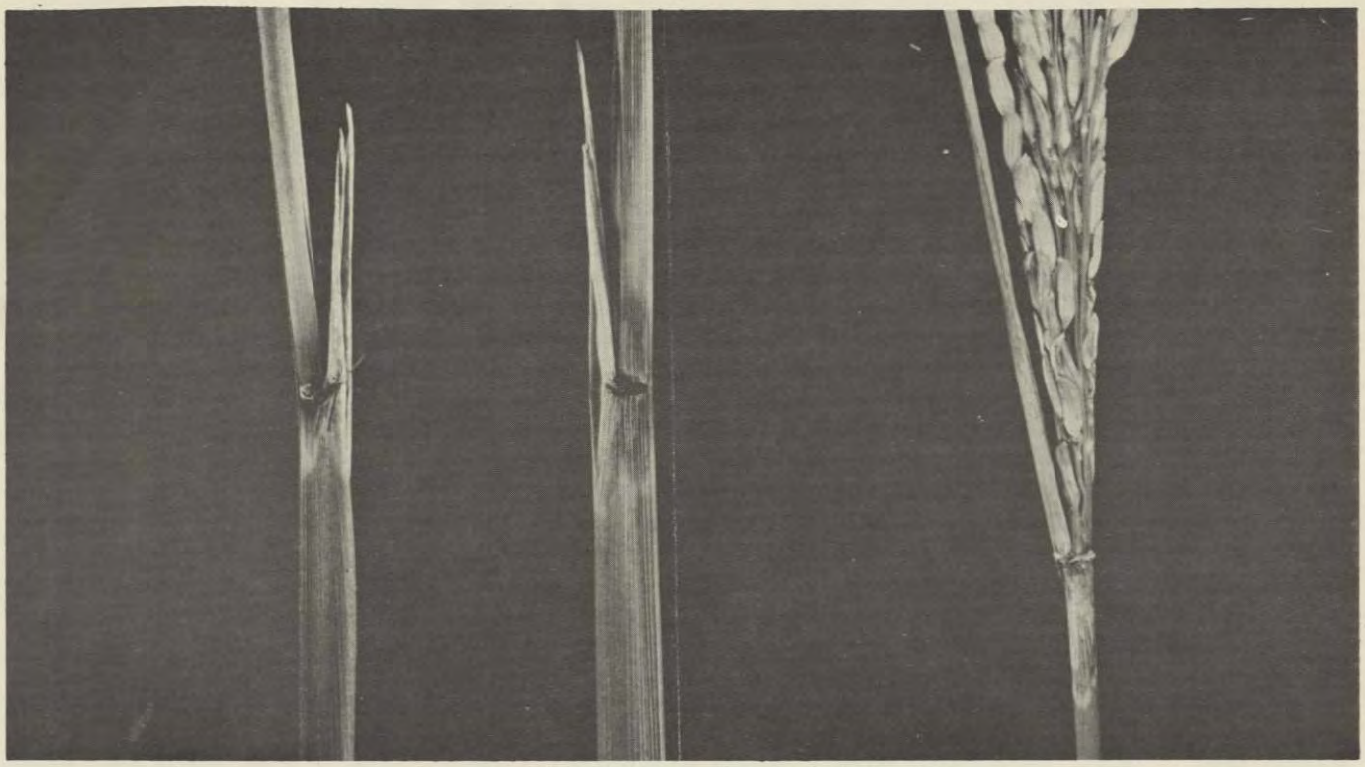

Figure 6. *Blast infection on the collar of the rice plant.*

Disease Monitoring

Occurrence of new races of *Pyricularia oryzae* in Colombia. Since CICA 8 was released as a commercial variety in 1978, typical susceptible blast lesions have been rare, although there has been a neck infection rate of about 10%.

In 1980, however, several upland rice fields of CICA 8 severely stressed by drought in the Colombian Llanos produced scattered patches of blast foci varying from small to very large. In these foci, plants suffered 60-80% leaf infection. Farmers made an additional application of fungicide to control leaf blast. With the resumption of normal precipitation the foci and leaf blast disappeared and record yields were obtained.

Most isolates from CICA 8 have a pathogenicity similar to that of isolates from Tetep, the presumed donor of resistance in CICA 8.

To date, six distinctive reaction patterns have been observed in race identification (Table 15). Most isolates from CICA 8 and Tetep were classified into Pattern 6.

Table 15. Reaction patterns of several commercial rice varieties and resistant donors to monoconidial isolates of *Pyricularia oryzae* in Colombia.

Group	Reaction pattern[1]					
	1	2	3	4	5	6
Commercial varieties						
CICA 8	●	●	●	●	●	▲
CICA 9	●	●	●	▲	▲	●
CICA 7	●	●	●	▲	●	●
CICA 4	▲	▲	▲	●	●	▲
IR 22	▲	▲	●	▲	●	▲
IR 8	▲	●	●	▲	●	▲
Bluebonnet 50	●	■	●	●	●	■
Resistant donors						
Ta-poo-cho-z	●	●	●	●	●	●
Colombia 1	●	●	●	●	●	●
Tetep	●	●	●	●	●	▲
Tadukan	●	●	●	●	●	▲
Ca 902/b/3/3	●	●	●	●	●	▲
Carreon	●	■	●	●	●	●
C 46-15	●	●	●	●	●	■
Dissi Hatif	■	▲	●	●	●	▲
Mamoriaka	■	▲	▲	●	●	■

[1] ●=resistant; ▲= susceptible; ■ =reaction varies among the isolates.

CICA 9, currently known to be highly susceptible to both leaf and panicle blast in Colombia, is resistant to this particular group of isolates. It is believed that the resistance of CICA 7 might be derived from Colombia 1, which is also resistant to these current isolates.

Monitoring is continuing to determine whether this group of races in the natural blast fungal population is increasing, particularly with respect to isolates with enhanced virulence on CICA 8, Tetep and other resistance donors.

Presence of eyespot disease on rice in Mexico, Guatemala and Honduras. Previously, the Pathology Section reported the occurence of eyespot disease on rice caused by *Drechslera gigantea* in Colombia, Panama and Peru. More recently, severe leaf damage was found on CICA 6 and IR 3839-1 in Chetumal, Quintana Roo, Mexico; on INIAP 415, CICA 7 and a line of P 882 in Guaymas, Honduras; and on several lines in Guatemala. Among the breeding lines, 5861 and 5865 weré severely damaged with grade 6 to 8 infection (standard evaluation system) in Tocumen, Panama.

The Agronomy Section worked on the following projects during 1980: a) studying and refining various weed control techniques; b) evaluating the dynamics of insect populations in relation to rice development; c) exploring possible sources of natural and modified commercial fertilizers; d) evaluating improved rice lines; and, e) developing continuous rice production systems.

Weed Control

Integrated weed control. Research was conducted to study the most appropriate form of integrated weed control in rice. Four cultural factors were included in the trials—different rice varieties, methods of irrigation, planting systems, and rates of N fertilizer.

Some rice varieties have more rapid initial growth or vigor than others and are able to compete better against weeds. The varieties CICA 4 and CICA 8, for example, are more vigorous and compete better than IR 22.

Irrigation by flooding not only has a strong positive effect on rice growth and yields but is effective in controlling weeds because it prevents or slows down germination of some weed species and decreases the growth of other non-aquatic plants. On the other hand, sporadic irrigation to supplement moisture requirements favors weed growth. This system is similar to the favored upland type of rice culture. With this type of irrigation, weeds receive the necessary moisture, air and light to grow freely.

Two methods of planting were studied—transplanting 30-day-old seedlings 20 x 20 cm on puddled, weed-free soil, and broadcasting 60 kg/ha of pregerminated seed on puddled fields. Transplanting gives the rice plants a 30-day advantage over weeds while pregerminated seed has only three days' advantage.

The timely application of N fertilizers at recommended rates and with adequate moisture is important; rice responds to fertilization on most of the soils of Latin America. The timeliness of application depends upon the crop and the population and development of weeds. Two fertilizer rates (0 and 150 kg/ha of N) were studied.

Complete weedings were also done periodically and weeds were permitted to grow freely to determine their influence on rice yields. The advantages of integrating some of the control factors were evident.

When weeds are not controlled, other than by one of the factors studied, the more vigorous varieties CICA 4 and CICA 8 should be planted as these yielded better than IR 22. When, however, perfect weed control was practiced, IR 22 provided its highest yields.

Yields of CICA 4 more than doubled (from 2047 to 4570 kg/ha) when flooding irrigation was used instead of supplemental irrigation. When weeds were controlled mechanically, however, the type of irrigation used had no effect on yields.

It was not possible to determine, in terms of weed control or influence on yields, which form or time of application of N fertilizer was optimum; fertilizers increased weed growth, in turn depressing rice yields.

No important differences in rice performance were observed with either planting method, if crops were irrigated by flooding throughout the crop cycle.

Chemical weed control. Tested, effective herbicides for use in rice are available throughout Latin America. Sometimes by modifying their form, time and system of application, or by using combinations of more than one product, it is possible to improve weed control, increase rice yields or lower costs.

Studies were undertaken with the objectives of: a) complementing weed control to increase rice production at lower costs through better use of selective herbicides and mechanical weeding; b) finding the best time for

applications, based on the mode of action of herbicides, and their phytotoxicity to both rice and weed seed in the germination and emergence stages of growth; and, c) observing the residual action of herbicides and the types of weeds not controlled so that a hormonal herbicide could perhaps be used later.

Manual weedings before weed competition became serious provided better rice yields than when herbicides were used. When however, manual weeding was later complemented with the hormonal herbicide MCPA, yields were reduced due to phytotoxicity of the chemical against rice.

Pre-emergent herbicides applied to fields seeded with pregerminated rice also can decrease plant populations. Benthiocarb (3 kg a.i./ha) provided significantly higher rice yields than did butachlor (2.7 kg a.i./ha) because rice stands were reduced with the latter compound. So long as seed remains covered with soil, butachlor is not damaging; toxicity is severe, however, when it contacts rice seed.

Pre-emergent applications of benthiocarb five days after planting followed by MCPA (380 g a.i./ha) as a postemergent when weeds began to develop, provided yields similar to when several manual weedings were used. This provides an alternative control measure where hand labor exceeds the cost of buying and applying the two herbicides.

Irrigation systems by themselves do not cause different yields when they complement mechanical and chemical weed control.

Employing the network of professionals trained in rice production, uniform tests of weed control methods will be carried out in the region, beginning in Central America. Through this project, CIAT can contribute to solving a serious and costly production problem of rice.

Dynamics of Insect Populations

Various insects attack rice in Latin America. The most important damages to yields have been caused by *Sogatodes oryzicola,* the rice plant hopper. At the end of the 1950's, *Sogatodes* was a carrier of the virus causing "hoja blanca", and during the next decade the high plant hopper populations caused direct plant damage. Improved varieties have effective genetic resistance to this pest.

Farmers continue to apply insecticides to control this and other pests because conditions in the hot, humid tropics favor insect buildups. Problems are most common in regions where rice is cultivated throughout the year. In these zones, insects do not pass through a definite diapause and are thus present almost all the time. By understanding pests and their population dynamics, one can obtain better control more cheaply and know when to use chemical measures.

Insects were collected periodically to determine populations in relation to rice plant development and environmental factors throughout the year. Preliminary results indicated that the population of *Hydrellia* sp. is considerable until the fourth week of the crop growth cycle and then it decreases. An inverse relationship existed between the amount of precipitation and *Hydrellia* numbers.

Epitrix sp. also was present in greater numbers in the drier periods.

Nitrogen Fertilizers

In the majority of Latin American soils, rice yields are greater when timely applications of N are made. However, the price of fertilizers is increasing and there are indications that much of the N is lost in commercial applications.

The Agronomy section has previously investigated and recommended the timing of N applications in relation to plant development and to irrigation and available soil moisture. In 1979 and 1980, emphasis has been on finding sources of natural and modified artificial fertilizers that can be more effective or economical than current commercial types.

In doctoral thesis work for the University of Florida (U.S.A.), species of the biofertilizer *Azolla* were collected in Colombia; two species, *A. filiculoides* and *A. caroliniana* were found. Research will be conducted on *Azolla's* effectiveness as a N source, and on the best method of commercial multiplication.

In the case of modified commercial fertilizers, CIAT is working through the International Fertilizer Development Center on different N formulations and how these are best available to the plant. Some of these are being tested with rice, under different soil characteristics and placement of the fertilizer in relation to the rice root zones.

Because soils at CIAT-Palmira are not representative of many rice-growing areas, plantings were done in three zones in the Cauca Valley of Colombia, and on different soil types.

Evaluation of Promising Rice Lines

An important task of the Agronomy Section is its evaluation of improved lines that are promising for selection and naming as varieties in various countries. Their agronomic characteristics, performance under different cultural systems and management are among the factors analyzed.

The performance of six promising lines was compared to the varieties CICA 4, CICA 8 and IR 22. Three transplanting densities (20 x 20 cm, 30 x 30 cm and 40 x 40 cm) were utilized along with two levels (0 and 150 kg/ha) of N fertilizer.

Lodging did not occur when N was not applied. In plots fertilized with 150 kg/ha of N, lodging was evident in two of the checks—11% in IR 22 and 5% in CICA 8—while the improved lines did not lodge. Planting distance did not influence lodging.

The rate of N applied generally did not cause large differences in yields, except in the cases of lines 5685, 5698 and 5852 planted at 20 x 20 cm, and in line 5684 and CICA 8, at a distance of 30 x 30 cm (Table 1).

In regard to planting densities, greatest production was obtained at closer distances. When no N was applied, yields were not significantly different for spacings of 20 x 20 cm and 30 x 30 cm. At the same planting distances, lines 5709 and 5684 with applied N, did not show significant differences. Lines 5698, 5852 and 5685 did not show significant differences at the 30 x 30 cm and 40 x 40 cm distances for the two levels of N (Table 1). Because seed was limited, transplanting was used. The next comparisons will be made with planting systems more common in Latin America.

Table 1. Effect of transplanting distance and two levels of N fertilization on yields of three varieties and six promising lines of rice.

Transplanting distance (cm)	N applied (kg/ha)	Yield of dry paddy rice (kg/ha)								
		Varieties			Promising lines					
		CICA 4	CICA 8	IR 22	5684	5685	5698	5709	5738	5852
20 x 20	0	6742	8013	7225	6821	7065	6595	7566	7967	7467
	150	6705	7540	6825	7769	9063	9055	8239	9031	10,045
30 x 30	0	4178	5009	5713	4628	5618	5318	5510	5497	5880
	150	5644	6847	6074	6583	6840	6001	6994	6122	6586
40 x 40	0	3068	4051	4354	3504	5808	3896	6324	3429	4295
	150	4052	5109	4508	4382	5329	4596	5252	4480	4928

Continuous Rice Production

The objectives of CIAT's continuous rice production program include: a) improving on a method for increasing production on small farms; b) providing demonstration plots to show small-scale farmers the operation of the system; c) maintaining current information on costs, yields and cultivation tecniques; and, d) using them in field days and for training purposes.

Every 15 days areas of 0.1 ha are planted by sowing pregerminated rice while 0.11 ha plots are transplanted. These systems resemble two small 1-ha farmsteads. In the system with transplanting, the total area is cultivated 2.6 times per year, and in the other, the area is cropped 2.4 times annually. In these systems, the best use of equipment, labor, water and the soil are being studied.

For these small systems, transplanting was not shown to be feasible. More hand labor was required than what was calculated to be available within a family unit.

When pregerminated seed was planted and 2.4 annual crops obtained, average plot yields of 6 t/ha provided a total annual production of 14.4 t/ha for the 1 ha area. On a monthly basis, yield was 1.2 t/ha of dry paddy rice.

This system, however, has several drawbacks. The principal problem is in preparing the soil. For these trials a 10-hp mechanical cultivator was used. Although the tractor was also used for other purposes at the CIAT farm, maintaining a machine of this size solely to cultivate small rice plots would be costly. It was calculated that this machine could efficiently handle soil preparation of 16.5 ha over the year.

Because of the intensive soil cultivation pattern, organic matter does not have time to decompose completely. In addition, life cycles of some insect pests are not broken and the possibility exists that normally harmless insects could become pests when their populations increase.

Snails of the Physidae and Planabidae are common where permanent flooding occurs, such as in the continuous production plots. It was necessary to apply copper sulfate or lindane and to periodically drain the paddies to control them. Because of their chewing on leaves of small rice plants, many seedlings died and yields were estimated to be about 1 t/ha less in plots where snails were not controlled.

Weed control was also poor due to the short time between cultivations. This required that herbicides be used and led to increased costs of production.

Several birds (*Molothrus bonariensis, Sicalis lutea, Gallinula chloropus* and *Sporophila* sp.) frequented the paddies, causing some damage and increasing production costs.

Because of some of these problems, recommendations for managing continuous rice production plots were changed. To decrease the planting intensity, the total 1-ha area was dividied into 11 equal lots, resulting in total annual cultivation of 2.2 times. It is estimated that by planting only every 17 days, sufficient time will be allowed so lots can dry out better and soil preparation will improve. Insect and weed control should also improve and total costs will be decreased somewhat.

Since its beginning, the Rice Program has provided training to professionals working in national programs. Early training dealt with specialized subjects, but formal intensive courses were added later. Now three types of courses are provided: intensive courses and specialized training, both within CIAT, and courses in other countries. After good results with training in earlier years, CIAT resolved to increase the number of participants in rice courses. Begining in 1978, the number of persons training in rice was more than doubled, to 31, and last year, 47 professionals participated.

The objectives of training in the Rice Program are:

1. To contribute to the development of a network of professionals in Latin America to carry out rice research and technology transfer.
2. To help national programs train their technical and scientific personnel, so that independent or cooperative research and technology transfer can take place.
3. To help professionals of these national institutions update and increase their knowledge in research and rice production.

Irrigated Rice Production Training

In 1980, a research training program on irrigated rice production was conducted with the collaboration of the CIAT Training Office. The program was divided into two periods: the six-week Intensive Course III, or intensive multidisciplinary phase, and 18 weeks of specialized training.

Table 1. Number of professsionals trained by the CIAT Rice Program during 1980.

Home country	No. of participants				Total man-months of training
	III Intensive Course	Specialized training within disciplines			
		Breeding	Agronomy	Pathology	
Belize	1 (1.5) [1]		1 (4.5)		6.0
Brazil	6 (9.0)		1 (4.5)		13.5
Colombia	4 (6.0)		2 (9.0)		15.0
Cuba		1 (4.5)			4 5
Dominican Republic	1 (1.5)		1 (4 5)		6.0
Ecuador	3 (4 5)	1 (4 5)			9.0
El Salvador	2 (3.0)			1 (4.5)	7.5
Guatemala	2 (3.0)		1 (4.5)		7.5
Haiti	2 (3.0)	1 (4.5)			7.5
Honduras	1 (1.5)				1.5
Mexico		1 (3.5)			3.5
Panama	2 (3.0)		1 (4.5)		7.5
Peru	3 (4 5)		1 (4.5)		9.0
Total	27 (40.5)	4 (17.0)	8 (36.0)	1 (4 5)	98.0

[1] Numbers in parentheses are man-months of training

In the first phase, 27 technicians, researchers and extension personnel from 11 Latin American countries participated. Eleven professionals from the same region participated in the second phase. Those chosen from the specialized training had taken Intensive Course III previously. Table 1 shows the number of participants who received rice training at CIAT in 1980.

Each participant in the agronomy and plant pathology training program had the opportunity to plan, plant, evaluate and harvest field experiments. The trials were oriented to resolving problems common in participants' own countries. The principal objective was to teach participants how to conduct research on local problems.

In addition, two technicians from Cuba and Mexico were received exclusively for specialized training in rice breeding.

In-country Training Courses

The postgraduate training program has been giving rice courses in those Latin American countries soliciting them. Eight in-country courses have been provided during the last three years. In 1980, courses were completed by 16 technicians in Peru and 12 agronomists in Panama.

Research Planning

During 1980, agricultural economists designed a research plan that will allow the establishment of criteria for allocating research resources among the different rice production systems of Latin America. Two types of criteria have been used in the past: efficiency and equity. The efficiency criterion refers to the maximum potential production increases that could be obtained from research. The equity criterion refers to the distribution of benefits that will accrue from research. A third criterion has been established that refers to the relative advantage of a given country or region in terms of the international rice trade in Latin America. In order to study these criteria, three research projects were designed: a) an evaluation of rice production systems in Latin America; b) an evaluation of the distribution of potential benefits from each rice production system; and, c) an evaluation of the impact that an increase in production in each system would have on the international rice trade.

Rice production systems. An attempt was made to classify rice production systems in terms of environmental conditions and resource availability. Initially, six classifications were made: a) an irrigated system, characterized by the high use of such commercial inputs as fertilizers and pesticides, located in Central Colombia; b) an irrigated system, characterized by the low use of commercial inputs, located in Corrientes, Argentina; c) an upland system, on fertile soils, located in Costa Rica; d) an upland system, on less fertile soils with high precipitation, located in the Llanos in Colombia; e) an upland system, on infertile soils with low precipitation, located in Brazil; and, f) a rainfed system, located in Ecuador.

Trends in area, production, yields and profitability are being studied and projected to show the main constraints on the expansion of each production system. The constraints are then classified as biological, resource endowment and economic. Then the Rice Program's probability of success in overcoming a production system's constraint could be predicted.

Distribution of benefits. This project will use an already well established methodology for evaluating the distribution of benefits accruing from research. The main concepts are the producer and the consumer surplus. The analysis could be made very sophisticated by classifying consumers by income class and producers by size and tenure; or it could be kept very simple by considering consumers and producers as simply two major groups. The extent of the analysis will be set by availability of data like price and income elasticities.

Impact of increased production on Latin American rice trade markets. Production increases in a rice system will reduce a nation's import needs or transform an importing country into a net exporter and will increase the exportable surplus of an exporting country. This project will evaluate the impact these changes will have on the rice flows of the region. A linear transportation model will be utilized. The most important variable to be estimated with this model is the shadow price or opportunity cost for an increase in exportable surplus of current exporters or a decrease in the import needs of current importers.

Initial Results

Three production systems were visited during the second semester of 1980: the upland system of the Colombian Llanos, the irrigated system of Central Colombia, and the upland system in Costa Rica.

Upland system of the Llanos Orientales, Colombia. The Llanos Orientales region produces 15% of Colombia's rice. Two production systems prevail: an irrigated system very similar to the one used in Central Colombia and an upland system along water courses. Both systems are mechanized and have similar cultural and agronomic practices. Large substitutability exists among the two systems. When a rice variety is adapted in the upland system, upland culture is substituted for the irrigated system in order to save irrigation costs.

The production cost structures are similar for both systems. In the irrigated system, land rental accounts for 8% of total costs; planting for 22%; commercial inputs, 33%; irrigation, 7%; harvesting, 20%; and others, 10%. In the upland system, costs are: land rental, 9%; planting 29%; commercial inputs, 35%; harvesting, 18%; and others, 9%.

The possibilities for expansion are different for each system. Expansion of the irrigated system is subject to the availability of appropriate infrastructure. Upland system expansion is subject to the availability of varieties that can be adapted to the soil and rainfall conditions.

Irrigated system of Central Colombia. Another 37% of Colombia's rice is produced in the central region where only irrigated culture is used. Rice producers here employ the most modern technologies available. In contrast to other regions, yields vary little among farms; as a result, the regional average is well above the national average. Most producers are vertically integrated with the milling industry, which gives them some freedom in marketing their rice. On the large farms that have private irrigation systems, rice is usually rotated with pastures. On the small farms which get water from government irrigation systems, rice must be rotated with cotton by government regulation.

The region has the highest production cost per hectare in the country. The structure of production costs differs from that of the Llanos. Land rentals account for 20% of total costs; planting for 13%; use of commercial inputs, 32%; irrigation, 4%; harvesting, 12%; and others, 19%. Land rentals are up to three times higher than in the Llanos. The level of fertilizer application is also substantially higher.

Profitability rates are very sensitive to the rice variety used. The variety determines the level of production costs; expenditures for commercial inputs are the main source of variation. Because CICA 8 has higher yields and lower production costs than IR 22, it was found to be more profitable to grow CICA 8 despite its lower support price. Table 1 shows the benefit-cost ratios estimated for the two varieties in four subregions. The rate of discount used was the official rate of 2.5% monthly. Under the assumptions made, IR 22 was not profitable except in Northern Tolima, but CICA 8 was profitable in all regions. These cost-benefit ratios have to be taken as crude estimates since no consideration for alternative use of production inputs was made, i.e., if the opportunity cost of land or labor is zero, the ratio will be higher. The area planted with CICA 8 is increasing in all regions except Northern Tolima.

Future expansion of rice area in the region is limited by water availability, especially in Central Tolima. The area accounts for nearly 70% of the total hectares irrigated by government-financed projects in the country. Given the sensitivity of the profitability rates to the type of variety used, it is safe to predict that future rice production in the region will depend upon the availability of varieties having higher yields or lower production costs so that the benefit-cost ratios are larger than one.

Table 1. Benefit-cost ratios of rice production by variety, in four subregions of the Central Region of Colombia, 1st semester 1980. [1]

Subregion	Variety	
	IR 22	CICA 8
Meseta de Ibague	0.95	1.13
North Tolima	1.12	1.33
South Tolima	0.96	1.12
Huila	1.01	1 29

[1] Ratios estimated from — Production costs: subregional averages reported by FEDEARROZ (unpublished), yields: subregional averages from FEDEARROZ (unplished), prices: support prices set by IDEMA for the period (IR 22, ColS 12,500/t; CICA 8, ColS11,777/t); discount rate: annual commercial interest rate of 30% reported by the IMF, August 1980.

Upland system of Costa Rica. Costa Rica has two main rice-producing regions that have a mechanized upland system of production with intensive use of commercial inputs. The principal difference between the two regions is the rainfall pattern. In the Pacifico Seco, rains occur during the first semester on a somewhat irregular pattern that poses a relatively high risk to rice production. In the Pacifico Sur, it is possible to grow rice in both semesters but on most farms the largest crop is grown during the first semester. In this region rainfall patterns are more regular.

The structure of production costs in Costa Rica is very similar to that in the upland system of the Colombian Llanos. Land rentals account for 7% of total costs; planting for 17% (lower than in the Llanos); commercial inputs, 38%; harvesting, 17%; and others, 21% (higher than in the Llanos). The relatively larger weight of "others" in the total production costs is mainly due to the insurance quota and social benefits not included in the total costs of the Llanos.

Costa Rica has been one of the main beneficiaries of the new rice varieties. The varieties are used on nearly 100% of the total area planted. The main effects of this adoption include: a) between 1966 and 1980, average national yields have increased from 0.7 t/ha to 3.0 t/ha; and, b) Costa Rica has converted from a net importer of rice to an exporter with a surplus of 50,000 t. Another effect of the adoption of new varieties is an increase in the per capita consumption of rice from 43 kg in 1970 to 51 kg in 1976. This increase possibly could be explained in terms of a decline in the real prices of rice since the per capita consumption of beans and maize declined in the same period.

It is not expected that future planted areas or yields will be substantially larger. Because of rainfall variability, it is risky to plant rice in most currently unused lands. Through the use of credit and crop insurance policies, on the other hand, the government is encouraging new rice production in less risky areas. Given the current technological level, yields are not expected to increase.

Future production trends are subject to the degree of government intervention in two subjects. First, the development of an irrigation project in the Pacifico Seco will allow two crops a year, increasing the national yield average and, by at least 50%, the national production. The second subject of government intervention deals with support prices, credit and insurance policies which have been reoriented to stimulate production.

Comparisons across regions. Table 2 compares rice production costs in the three regions. Costa Rica has the lowest cost per hectare, which is very similar to that of the Colombian Llanos. Cost per hectare in Central Colombia is 30% higher than in the other regions. In terms of cost per unit of output, the Llanos region has the lowest while Costa Rica has the highest. High yields in Central Colombia compensate for the high cost of production.

Table 2. Rice production costs for three production systems in Latin America, 1st semester, 1980 [1]

Costs	Colombia		Costa Rica
	Llanos Olrientales, irrigated and upland	Central Region, irrigated	Pacifico Seco and Pacifico Sur, upland
US$/ha	900	1215	810
US$/t	180	202	279

[1] Production costs and yields from average data reported by. FEDEARROZ in Colombia and the Banco Central in Costa Rica. Official exchange rates taken from **International Finance Statistics**, August 1980, IMF.

The estimated benefit-cost ratios for the systems reviewed this year are presented in Table 3. These ratios must be observed with some caution because: a) the production cost and yield figures used are regional or national averages and variances in these data will indirectly influence the benefit-cost ratios; b) the opportunity costs of the different production inputs were assumed to be the commercial price paid for them; and, c) the support price used to estimate the gross returns, in both countries, was lower than the commercial price. Therefore, there is a downward bias in the estimation. However, these ratios are useful in comparing the profitability of rice production and other alternatives in each region.

Table 3. Benefit-cost ratios for various rice production systems in Latin America, 1st semester 1980. [1]

System	Benefit-cost ratio
Colombia	
Llanos, upland	0.84
Llanos, irrigated	0.93
Central Region, irrigated	1.11
Costa Rica	
Pacifico Seco, upland	1.05
Average, upland	0.96

[1] Production costs and yields from average data reported by: FEDEARROZ, in Colombia and the Banco Central, Costa Rica; discount rate taken from **International Finance Statistics**, August 1980, IMF, (for Colombia, 30% annual; for Costa Rica. 8% annual)

The system with the largest benefit-cost ratio is the irrigated of Central Colombia. This is not surprising since yields average 6 t/ha, against 5 t/ha in the Llanos and 3 t/ha in Costa Rica. However, while the rate of return is high, it could be lower for a potential investor facing the scarcity of some basic inputs like land and water. It has already been mentioned that land rentals cost up to three times more than in other regions. The region is capitalizing on its relative advantage in rice production.

The upland system in the Llanos has the lowest cost-benefit ratio. This ratio is affected by the lower yield average reported for the region. In contrast to the Central Region, individual farm yields vary greatly in this system, mainly because of variations in land quality and rainfall patterns. On less favored lands, yields are more affected by rainfall variations. Some upland producers have reported yields as high as those obtained in the irrigated system of the region. With these higher yields, the benefit-cost ratio of the Llanos upland system would become larger than one due to lower prevailing costs.

The low benefit-cost ratio estimated for the Llanos does not agree with the rapid increase of the upland system in the region. If the yield variation hypothesis above is valid, one of the main constraints for expansion of the system will be the high risk involved.

The other three systems have benefit-cost ratios of near one, given the limitations of the data. This means that rice production, under the assumptions made, is a competitive investment opportunity.

INTENTIONALLY
LEFT
BLANK

International Rice Testing Program for Latin America

The International Rice Testing Program for Latin America (IRTP) was established in mid-1976 as a cooperative project between CIAT and IRRI and is a major method for transferring new technology to national programs in the region. In addition to facilitating the international flow of rice germplasm, the IRTP enables IRRI and CIAT scientists, through conferences and monitoring tours, to become acquainted with rice scientists and constraints limiting rice production in Latin America.

Activities of the IRTP for Latin America in 1980 were concentrated on established strategies: a) evaluation, multiplication and distribution to national programs of basic germplasm from IRRI and CIAT; b) identification of problems limiting production and of research needs in various countries; c) assembling and organizing data of nurseries distributed in 1978 and 1979; and, d) evaluating the germplasm of IRTP nurseries distributed in 1980.

Results of Nurseries Distributed in 1978

Data from nurseries distributed in 1978 were analyzed and results were summarized (CIAT Rice Prog. 1979 Ann. Rept.). Final reports of four yield nurseries (VIRAL-T, VIRAL-S, VIAVAL, VIRAL-F) and three observational nurseries (VIOAL, VIPAL, VIOSAL) were printed in Spanish and English and distributed to all national cooperators in Latin America and to participants in the IRTP sessions at IRRI, April 21-25, 1980.

Results of Nurseries Distributed in 1979

In 1979, the number of nurseries was increased from seven to 13 by request of national programs. Some 258 sets, including 497 entries in the various nurseries, were sent to 23 Latin American countries. Data received from each nursery up to November 1980 are presented in Table 1. This year the percentage of data received (47.3%) was low compared with that of the previous year (68%), mainly because of climatic conditions that affected rice crops in some countries. A hurricane destroyed the nurseries in the Dominican Republic and Haiti. Nurseries in Nicaragua were not harvested because of the political situation. The data of various nurseries are being analyzed and final results will be published in 1981.

Table 1. Data returned from 1979 IRTP nurseries for Latin America

Nursery [1]	Number of sets		Returned data
	Dispatched	Returned	(%)
VIRAL-P	40	18	45.0
VIRAL-T	28	13	46.4
VIRAL-Tar	9	2	22 0
VIRAL-S	30	16	53.3
VERAL	23	14	60.8
VIOAL	14	9	64.3
VIOAL-S	25	14	56.0
VIPAL	32	16	50.0
VIOAL-Es	18	9	50.0
VIAVAL	13	7	53.8
VIOSAL	8	-	-
VITBAL	10	3	30.0
VIRAL-F	8	1	12 5
Total	258	122	47.3

[1] VIRAL-P=International Rice Yield Nursery-Early Maturing
VIRAL-T=International Rice Yield Nursery-Medium Maturing
VIRAL-Tar=International Rice Yield Nursery-Late Maturing
VIRAL-S=International Rice Yield Nursery-Upland
VERAL=International Specific Rice Yield Nursery
VIOAL=International Rice Observational Nursery
VIOAL-S = International Rice Observational Nursery-Upland
VIPAL=International Rice Blast Nursery
VIOAL-Es =International Rice Observational Nursery-Leaf Scald
VIAVAL=International Rice Sheath Blight Nursery
VIOSAL=International Rice Salinity and Alkalinity Observational Nursery
VITBAL=International Rice Low Temperature Nursery
VIRAL-F=International Rice Yield Nursery-Deep Water

Table 2 indicates the best-performing entries of the yield nurseries VIRAL-P, VIRAL-T, VIRAL-S and VIAVAL.

Table 2. Average yield and days to flowering of the best five entries of four IRTP yield nurseries for Latin America distributed in 1979.

Designation	Origin	Yield (t/ha)		Days to flowering
		Average	Range	
VIRAL-P, planted at 18 locations[1]	India	5.1	1.8 - 8.1	94
IET 4094	India	4.9	2.1 - 7.0	92
IET 6507	Indonesia	4.8	1.4 - 8.1	96
B 541b-Pn-58-5-3-1	Philippines	4.7	2.0 - 7.3	96
MRC 603/303	Bangladesh	4.4	1.4 - 8.0	104
BR 51-46-1-C1				
VIRAL-T, planted at 12 locations[2]	IRRI	5.3	2.2 - 7.5	105
IR 3273-339-2-5	Colombia	5.0	1.8 - 7.8	104
CICA 8	Indonesia	4.7	2.3 - 6.8	104
B 542b-Pn-68-9-2-2	IRRI	4.6	1.9 - 6.7	101
IR 4568-225-3-2	India	4.5	2.3 - 6.3	98
IET 1785				
VIRAL-S, planted at 13 locations[3]	Colombia	4.4	0.5 - 7.5	114
CICA 8	IRRI	4.0	0.2 - 7.2	108
IR 43	Indonesia	3.8	0.1 - 7.3	111
B 2360-11-3-2-9	IRRI	3.6	0.2 - 6.8	108
IR 9671-01141-5	IRRI	3.6	0.2 - 5.7	108
IR 9679-9-2-3-9				
VIAVAL, planted at 7 locations[4]	Indonesia	5.9	3.6 - 7.3	105
B 189C-KN-45-1-3	IRRI	5.7	1.7 - 7.8	115
IR 4422-98-3-6	Colombia	5.5	1.9 - 7.4	113
CICA 8	Taiwan	5.4	2.5 - 7.1	109
CHIANUNG Sen Yu 19	IRRI	5.1	1.7 - 7.1	117
IR 2796-44-2				

[1] Ten irrigated and eight upland tests.
[2] Seven irrigated and five upland tests.
[3] Three irrigated and ten upland tests
[4] Five irrigated and two upland tests· all lines were resistant to sheath blight

The germplasm of the specific nursery (VERAL), which included 11 promising lines combining multiple blast resistance from Tetep, Colombia 1, Dissi Hatiff, C46-15 and Carreon, was planted in 15 locations under irrigated and favored upland cultures. Results of grain yield and blast leaf and neck infections are presented in Table 3.

The second International Blast Nursery for Latin America (VIPAL-79) was planted in 16 locations and evaluated for leaf blast infection at the seedling stage. In six locations the germplasm was also evaluated for neck infection. Results of leaf infection indicated that 36 of the 126 entries were resistant, with infection types between 1-3; 37 were moderately resistant (infection types not greater than 4); and 53 were rated as susceptible (infection types greater than 5). The data of blast neck infection recorded at six locations showed that among the 36 entries resistant to leaf infection, 14 were also resistant to neck blast, with infection types between 1 - 4 and 22 were susceptible, with neck infection types greater than 5. Similarly, among the 37 entries rated as moderately resistant to leaf infection, 11 were resistant and 26 were susceptible to neck blast. Also, among the 53 entries which were susceptible to leaf blast, 11 were rated as resistant and 41 as susceptible to neck blast.

The entries evaluated as resistant or moderately resistant to leaf or neck blast or both, will be further tested in the fourth International Blast Nursery distributed in 1981. Some of these entries, with resistance to *Sogatodes* and good grain quality, also will be included in the appropriate yield nurseries in 1981.

Results of the observational nurseries for irrigated (VIOAL) and upland (VIOAL-S) conditions—planted in 10 and 14 locations, respectively—indicated that 57 VIOAL entries and 13 VIOAL-S entries had tolerance to blast, with early and medium growth cycles and good yielding ability. These promising entries will be included in the appropriate yield nurseries for Latin America in 1981.

Table 3. Average yield and blast incidence of the germplasm of VERAL planted in 15 locations of Latin America, 1979.

Designation	CIAT-ICA origin	Yield (t/ha)		Blast	
		Irrigated[1]	Upland[2]	Leaf reaction[3]	Neck infection[4]
P1369-4-16M-1-2M-4	5709	6.2	4.7	R	2.5
P1264-6-11M-1-3M-4	5852	6.0	4.1	R	3.2
P1404-1-1M-1-1M-1	5734	5.5	3.4	R	2.2
P1397-4-9M-3-3M-3	5732	6.0	4.1	R	2.7
P1377-1-15M-4-1M-1	5715	5.7	4.3	MR	2.9
P1274-6-8M-1-3M-1	5685	6.2	4.3	R	2.0
P1386-6-8M-1-3M-1	5728	5.3	4.0	MR	2.0
P1429-8-9M-2-1M-5	5738	5.4	3.9	MR	2.0
P1270-1-4M-3-1M-5	5684	5.0	3.6	MR	3.2
P1342-6-6M-1-2M-3	5698	5.6	3.5	MS	2.2
P1377-1-15M-1-2M-3	5854	5.7	4.3	R	2.5
CICA 7 (Check)	Colombia	4.3	3.7	MS	2.6
CICA 8 (Check)	Colombia	6.4	4.2	MR	2.2
CICA 4 (Check)	Colombia	5.6	3.6	S	4.5

[1] Average of eight locations
[2] Average of seven favored upland locations (good rain distribution)
[3] Based on 15 locations R=Resistant; MR=Moderately resistant; MS=Moderately susceptible; S=Susceptible
[4] Average of six locations under scale 1-9, 1=less than 1% panicles infected, 9=50-100% of panicles infected.

The first Observational Nursery for Leaf Scald (VIOAL-Es, 79) was planted in 10 locations. Evaluations for leaf scald were carried out in five Central American locations and two areas of northern South America, where the disease is more prevalent.

Among the 61 entries in this nursery, 12 were rated as resistant in all locations, with infection types between 1-4; 22 were resistant in 6 locations but susceptible in one location; and 27 entries were classified as susceptible, with infection types greater than 5 in more than one location.

From nurseries distributed in 1979, national programs of some countries selected several lines for further yield and regional trials. Brazil and Costa Rica each selected 24 entries; Haiti, 10; and Panama, 3.

Germplasm Evaluation and Selection

Evaluation of 1979 IRRI nurseries. In 1979, 12 nurseries with 1692 entries were received from IRRI for evaluation, seed multiplication and selection. These nurseries were planted at CIAT-Palmira in July and August (CIAT Rice Prog. 1979 Ann. Rept.) The germplasm was harvested and evaluated in early 1980 for *Sogatodes* resistance and grain quality.

From the 1692 entries, 1052 lines were discarded under field conditions; 692 showed segregation and 360 had poor plant type. Six hundred forty entries were selected under field conditions and tested under laboratory conditions for *Sogatodes* resistance and grain quality. Of this germplasm, 255 entries had poor grain quality (white belly and short grain) and 108 were susceptible to *Sogatodes*. Among the 282 selected germplasm entries, 55% originated from IRRI and the rest came mainly from India and Colombia.

1980 IRTP nurseries. In 1980, a total of 298 sets of 14 nurseries was dispatched to 24 countries of Latin America (Table 4). Among the 623 entries in these nurseries were the 282 materials selected from the IRRI nurseries, 286 promising lines selected from nurseries distributed in Latin America in 1979 and 55 lines from national programs.

A new Observational Nursery for Acid Soils (VIOAL-Sa) was formed which included germplasm that was tolerant to yellowing or oranging of leaves. This problem of acid soils was observed in the germplasm of the 1979 nurseries VIRAL-P, VIRAL-T, VIOAL-Es, VIAVAL, VERAL and VIPAL that were planted in Belize, Colombia (La Libertad) and El Salvador. The resistant checks Colombia 1, Carreon and Tetep of the blast nursery were also highly resistant to the yellowing problem at La Libertad. These varieties were included as resistant checks in the observational nursery distributed to countries having problems with acid soils.

Table 4. IRTP nurseries for Latin America distributed in 1980.

Nursery[1]	Number of entries	Number of sets	Yield range[2] (t/ha)
Yield Nurseries			
VIRAL-P	15	39	4.2 - 6.7
VIRAL-T	24	29	3.7 - 7.8
VIRAL-Tar	15	14	5.1 - 8.4
VIRAL-S	24	36	4.9 - 7.0
VERAL	11	26	5.4 - 7.2
VIRAL-F	13	7	3.5 - 7.5
VITBAL	25	7	2.7 - 6.1
VIAVAL	10	13	3.6 - 6.5
Observational Nurseries			
VIOAL	83	18	3.6 - 8.9
VIOAL-S	63	24	2.5 - 9.0
VIOAL-Es	64	16	3.4 - 7.9
VIPAL	152	47	2.7 - 9.0
VIOAL-SA[3]	105	14	2.7 - 9.1
VIOSAL	19	10	1.8 - 7.5
Total	623	298	

[1] See name of nurseries in footnote of Table 1.

[2] Average range yield of two plantings at CIAT, under irrigated-transplanted conditions

[3] VIOAL-SA= International Rice Observational Nursery-Acid Soils.

Evaluation of 1980 IRRI nurseries. In May and June 1980, 14 nurseries with a total of 1581 entries were received from IRRI for planting at CIAT-Palmira. Part of the germplasm was harvested and is being evaluated for *Sogatodes* resistance and grain quality. The rest of these materials will be evaluated in early 1981. The selected germplasm and the best-performing entries of nurseries distributed in 1979 will be included in the 1981 IRTP nurseries for Latin America.

Other sources of germplasm. To increase the sources of germplasm in the upland nurseries for Latin America, seed of promising entries or donors was requested from the Institute de Recherches Agronomiques Tropicales (IRAT) and the Instituto Agronomico de Campinas (IAC), Brazil. Brazil.

Seed of 95 entries, 41 from IRAT and 54 from IAC, was received in 1980. These materials were planted at CIAT-Palmira for evaluation and seed multiplication. The improved types will be included in the 1981 Observational Nursery for Acid Soils and the Upland Yield Nursery.

For observation under CIAT conditions, eight hybrids of rice x sorghum crosses from the People's Republic of China were introduced from IRRI. Under field conditions, these hybrids showed early maturity (95-115 days), short or intermediate stature (76-100 cm), poor seedling vigor and plant type, and low grain yield (1.5-3.0 t/ha). The hybrids were susceptible to *Sogatodes* but resistant to hoja blanca virus under laboratory conditions. They were also resistant to blast at the seedling stage in blast beds.

Monitoring Tours and Individual Visits

Monitoring tours and individual visits of the IRTP were focused on evaluating the germplasm distributed to cooperators, learning the research status and identifying problems affecting rice production and training needs of national program personnel.

Monitoring tour. A Central American monitoring tour was held Sept. 8-23, 1980. Participants observed the research activities of the national programs, the germplasm of 1980 IRTP nurseries and commercial crops in Costa Rica, Guatemala, Honduras, Nicaragua and Panama. Participating were one or two scientists from each of these countries, along with one CIAT scientist, a pathologist from Louisiana State University (U.S.A.), one scientist from Sudan and two scientists from IRRI, including the coordinator for Latin America.

Research programs in Central America have improved substantially from those observed during a 1977 monitoring tour. The programs are small but well organized and oriented towards solving the main constraints of the crop. Panama has a small hybridization project and the others are evaluating materials coming primarily from CIAT's breeding project and IRTP nurseries.

Rice is produced in Central America mainly under favored upland conditions, except in Nicaragua, where most production is direct-seeded and irrigated. Projects for converting the upland system into irrigated rice are underway in Honduras and Panama.

The main limiting factors on production are blast *(Pyricularia oryzae)*, leaf scald *(Rhynchosporium oryzae)* and brown leaf spot *(Helminthosporium oryzae)*. Sheath rot *(Acrocylindrium oryzae)*, sheath blight *(Thanatephorus cucumeris)* and stem rot *(Leptosphaeria salvini)* have been increasing and may become serious problems. Among the insects, the armyworms *(Spodoptera* spp. and *Mocis* sp.), borers *(Elasmopalpus lignosellus)*, stink bugs *(Tibraca limbativentris, Oebalus poecilus)* and *Sogatodes oryzicola* are the most predominant.

In addition to the constraints of diseases and insects, the lack of certified seed is a limiting factor in all five countries. The lack of trained personnel, especially in the area of pathology, is a very important constraint for Guatemala, Honduras and Nicaragua.

Individual visits. Individual visits to Chile, Cuba, the Dominican Republic, Ecuador, Haiti, Jamaica, Mexico, Panama and Peru were made this year. Chile, Haiti and Jamaica were visited to learn about their rice culture and problems.

The temperate rice crop of Chile is mainly direct-seeded and irrigated; few farmers transplant. In 1979-80, a total of 47,000 ha was planted with japonica varieties (Oro, Quella and Niquen) with an average yield of 4.0 t/ha. The main problem limiting production is the lack of suitable varieties of short and medium maturity that are insensitive to day length and highly tolerant to low temperatures. Another serious problem is a brown spot on grain glumes, probably a fungus disease, that causes sterility. Weeds are also a serious constraint due to lack of certified seed and poor land leveling.

In Jamaica, the actual rice area consists of 200 ha; all is irrigated and cropped twice a year. This area provides less than 5% of the national consumption of 40,000 tons of milled rice; the rest is imported from Guyana. The government plans to increase the growing area to 5000 ha to produce two irrigated crops annually to satisfy national needs. The currently used commercial varieties CICA 9 and CICA 4 were performing well. CICA 8 was recommended for commercial production since this variety had performed well in various trials conducted at the Elim Experimental Station.

Ministry of Agriculture officials requested that Jamaica be included in the IRTP network in order to receive improved germplasm and training assistance. Problems observed in Jamaica were blast, brown leaf spot and leaf scald. Salinity was serious on the peat soils of the Falmouth area. Lines IR 2153-26 and IR 2153-46 from IRRI, planted in this area, were highly salt-tolerant.

The rice crop in the Artibonite Valley was observed on the visit to Haiti. Eighty percent of the valley's 45,000 ha is dedicated to rice. The rice culture is irrigated and transplanted; fields belong to small farmers. Main problems observed were Zn deficiency, water and drainage control, weeds and birds. The research program is evaluating materials of the IRTP nurseries from CIAT. Ten lines selected from VIRAL-P and VIRAL-T of 1979 are being tested in 15 regional trials with the aim of selecting one or two for commercial production.

Peru was visited in order to participate in a short course organized by the national program with the cooperation of CIAT at the Vista Florida Experimental Station in Chiclayo. During this visit, germplasm of IRTP nurseries from IRRI and CIAT was evaluated. Also, various commercial crops in the Chancay Valley were observed. Rice farmers suffered a serious drought in 1980, considered the worst in 70 years. Because the Tinajones reservoir that supplies water for rice and other crops was almost empty, only 3000 ha of rice—one-tenth the normal amount—were planted in the Chancay Valley. The government was importing rice to meet national needs.

The visit to Cuba focused on nutritional disorders. Dr. S. Yoshida, IRRI physiologist, was invited to help evaluate these problems which are indicated in Table 5.

Table 5. Problems observed in the main rice areas of Cuba visited in May 1980.

Enterprise (Province)	Area (ha)	Variety name	Amount grown (%)	Problems
La Sierpe (Sancti Spiritus).	27,000	IR 880 IR 1529	90 10	Zn, Fe deficiency; pH of soil 6.0 - 6.8
Vado del Yeso (Gramma)	13,000	Nylamp IR 1529 IR 880	60 24 16	Salinity
Yara (Gramma)	12,000	Nylamp IR 1529	80 20	Root lodging[2]
Los Palacios (Pinar del Río)	36,700	IR 880 IR 1529	85 15	Yellowing of leaves; pH of soil 4.1 - 4.5; insect damage (*Hydrellia* sp.)
Nueva Paz[1] (La Habana)	540	IR 1529 Nylamp	50 50	Salinity; Zn, Fe deficiency; pH of soil 7.0 - 8.0

[1] Seed production
[2] The varieties lodged in this area only; the cause of lodging not determined yet

The visit to Ecuador was made to accompany Dr. B. Vergara, of IRRI, who was invited by the national program to observe the rice area of the Guayas province. Rice crops in lower areas of this province are subjected to sporadic flooding for one or two weeks during the tillering stage. Farmers plant traditional varieties—Pico negro, Donato and SML—which are yielding 3.5 t/ha.

The Guayas rice culture is very similar to that of Indonesia, where rice scientists are developing improved varieties with tolerance to short periods of submergence. To help the national program, seed samples of all native varieties were taken to IRRI to be tested for submergence

and also for making crosses with improved varieties or with sources of resistance to submergence. Early generation (F_2 or F_3) seed of resistant progenies will be sent to Ecuador for further selection under local conditions.

Mexico and Panama were visited mainly to evaluate the germplasm of IRTP nurseries distributed in 1980. Several promising lines resistant to blast, leaf scald, brown leaf spot, sheath blight and sheath rot were identified in nurseries planted under upland conditions in the southeast of Mexico and Tocumen, Panama. Varieties IR 42, IR 43 and CICA 8 were outstanding in all Mexican sites. These observations complement the CIAT data and are important in determining the entries that will continue in the IRTP nurseries for Latin America.

Also observed in Panama were commercial crops of CICA 8 and CICA 7 planted under upland conditions on the Universidad de Panama farm at David. These crops (110 ha of CICA 8 and 100 ha of CICA 7) were observed during the monitoring tour (Sept. 19, 1980) and at that time CICA was affected severely by blast at the seedling stage (40-50 days old); CICA 7 was highly tolerant. In this visit (one month later) it was found that CICA 8 recuperated from the blast leaf infection in about 90% of the severely affected area. The recuperation probably was not due to fungicides because a check plot receiving no fungicides showed better recuperation. A yield of 6-7 t/ha was estimated.

Two other commercial crops of CICA 8 planted in this region, which were affected by blast at the seedling stage, also showed good recuperation.

The observations in Panama plus the information from the Colombian Llanos—where CICA 8, under upland conditions, also recuperated from blast at early growth stages—may indicate that this variety has a good ability to recover from blast leaf infection.

Basic Seed Multiplication and Distribution

The multiplication of basic seed of CICA varieties, donor parents and promising entries is being done to meet requests of national programs and institutions of the region.

A total of 988 kg of seed of nine varieties and several lines were sent to nine countries.

Program Publications

Ahn, S.—W. 1980. *Eyespot of rice in Colombia, Panama and Peru* Plant Disease 64(9): 878-880.

Centro Internacional de Agricultura Tropical. 1980. *Rice Program 1979 Annual Report.* Cali, Colombia. 44p. Series 02ER1-79. Also available in Spanish.

Centro Internacional de Agricultura Tropical. 1980. *Arroz del CIAT para América Latina.* Carta Informativa. Nos. 1-2. Serie 01SR-1 and Serie 01SR-2.

Cheaney, R.L. and Jennings, P.R. 1980. *Field Problems of Rice in Latin America.* Cali, Colombia, Centro Internacional de Agricultura Tropical. 94p. Series 07ER-1. Also available in Spanish.
Reprint of the 1975 original edition.

INTENTIONALLY
LEFT
BLANK

Personnel

(as of 31 December, 1980)

Senior staff

Joaquín González, MS, Agronomist, Coordinator
Sang-Won Ahn, PhD, Plant Pathologist
Peter R. Jennings, PhD, Plant Breeder
Manuel Rosero, PhD, Plant Breeder, IRRI Liaison Scientist
Hector Weeraratne, PhD, Plant Breeder

Postdoctoral fellow

Rafael Posada, PhD, Economics

Visiting research associates

* Luis E. Dussán, Agronomist, Agronomy
* William Zimmerman, Botanist, Agronomy

Research associates

** Elias García, Agronomist, Training
Marco Perdomo, Agronomist, Agronomy
** Eugenio Tascón, Agronomist, Training.

Research assistants

Luis Eduardo Berrío, Agronomist, International Trials
Yolanda Cadavid de Galvis, Agronomist, Agronomy
Jenny Gaona, Agronomist, International Trials
Luis Ernesto García, Agronomist, Breeding
Luis Octavio Molina, Agronomist, Breeding
Edgar Tulande, Agronomist, Plant Pathology
Miguel Eduardo Rubiano, Agronomist, Plant Pathology

* Left during 1980
** Assigned to Training Program.

CIAT Publication
Rice Program
Communication Support Unit

Editing: *Charles Bower*
Francisco Motta
Production *CIAT's Graphic Arts Section*
Printing: *Editorial XYZ, Cali, Colombia*

editorial XYZ
CALI — COLOMBIA