PN-AAK-049

MSU Rural Development Papers

Farming Systems Research: A Critical Appraisal

by
E.H. Gilbert
D.W. Norman
F.E. Winch

MSU Rural Development
Paper No 6
1986

Department of Agricultural Economics
Michigan State University
East Lansing, Michigan 48824

MSU RURAL DEVELOPMENT PAPERS

Carl K. Eicher and Carl Liedholm, Co-editors

The MSU Rural Development Paper series is designed to further the comparative analysis of rural development in Africa, Latin America, Asia and the Near East. The papers will report research findings on community development and rural development in historical perspective as well as on contemporary rural development programs. The series will include papers on a wide range of topics such as alternative rural development strategies; non-farm employment and small-scale industry; marketing problems of small farmers; agricultural extension; interrelationships between technology, employment, and income distribution; and evaluation of rural development projects. While the papers will convey the research findings of MSU faculty and visiting scholars, a few papers will be published by researchers and policy-makers working with MSU scholars on cooperative research and action programs in the field.

The papers are aimed at teachers, researchers, policy-makers, donor agencies, and rural development practitioners. Selected papers will be translated into French, Spanish, and Arabic. Libraries, individuals, and institutions may obtain single copies of the MSU papers free of charge and may request their names be placed on a mailing list for periodic notifications of published papers by writing to:

MSU Rural Development Papers
Department of Agricultural Economics
206 International Center
Michigan State University
East Lansing, Michigan 48824
U.S.A.

FARMING SYSTEMS RESEARCH: A CRITICAL APPRAISAL****

by

Elon H. Gilbert*
David W. Norman**
Fred E. Winch***

1980

*Visiting Professor, University of Florida.

**Professor, Kansas State University.

***Agricultural Economist, German Aid, Lesotho.

****This paper is published as part of the farming systems research program being carried out by Michigan State University under the "Alternative Rural Development Strategies" contract AID/ta-CA-3, U.S. Agency for International Development, Development Support Bureau, Office of Rural Development and Development Administration.

MSU is an Affirmative Action Equal Opportunity Institution

TABLE OF CONTENTS

	Page
PREFACE	ix
ACKNOWLEDGEMENTS	xiii
Chapter	
1. INTRODUCTION	1
1.1 Definition of farming systems research	2
1.2 Orientation and outline of paper	4
2. AN OVERVIEW OF FARMING SYSTEMS RESEARCH	6
2.1 Delineation of a farming system	6
2.2 "Upstream" and "downstream" FSR	10
2.3 Schematic framework for a "downstream" FSR program	11
2.4 Attributes of the "downstream" FSR approach	13
2.4.1 Consideration of family objectives	13
2.4.2 Incorporating community and societal goals	13
2.4.3 Tapping the pool of knowledge of the society	14
2.4.4 Recognition of the locational specificity of the technical, exogenous, and endogenous factors	16
2.4.5 The dynamic and iterative nature of FSR	17
2.4.6 The integrative and multidisciplinary nature of FSR	18
2.4.7 Flexibility in accomodating both technical and nontechnical improvements in farming systems	19
2.4.8 Complementing existing traditional research approaches	19
3. REVIEW OF CURRENT FARMING SYSTEMS RESEARCH PROGRAMS	21
3.1 Scope of activities of FSR-type programs	21
3.2 "Upstream" FSR: programs aimed at producing general prototype solutions	23
3.2.1 Research on component technology	25
3.2.2 Operational linkages with national programs	26
3.3 "Downstream" FSR: programs focusing on immediate solutions for specific local situations	27
4. GENERAL METHODOLOGICAL AND IMPLEMENTATION ISSUES OF FSR	31
4.1 Mandates of institutions	32
4.2 Linkages	33
4.3 Credibility	34

Chapter | Page

4.4 Efficiency of the research process 35
4.5 Whose constraints should an FSR program concentrate on? 37
4.6 Criteria for evaluating improved systems 40

5. METHODOLOGY OF FARMING SYSTEMS RESEARCH 44

5.1 Descriptive and diagnostic stage 44

5.1.1 Selection of the target area 44
5.1.2 Baseline data analysis 45
5.1.3 On-farm studies 46

5.2 Design stage 51
5.3 Testing stage 55

5.3.1 Trials at the farmers' level 58
5.3.2 Farmers' testing 58
5.3.3 Intermediate types of trials 60

5.4 Extension stage 61

5.4.1 Monitoring and evaluation 61
5.4.2 Integrating FSR into projects 63

6. INSTITUTIONAL LINKAGES 65

6.1 Problems in expanding FSR in national research systems 66

6.1.1 FSR and national agricultural research institutions/universities 66
6.1.2 Should separate FSR units be established? . . 69
6.1.3 FSR and implementing agencies 69
6.1.4 FSR in relation to funding and planning agencies 70

6.2 FSR at the regional and international centers 72
6.3 Possible roles for developed country institutions . . 74

7. TRAINING IN FARMING SYSTEMS RESEARCH 77

7.1 Requirements for FSR training 77
7.2 FSR training as a part of degree programs 78
7.3 Non-degree training programs in FSR 80

8. CONCLUSIONS 82

8.1 Current status and potential of FSR 82
8.2 Concerns about FSR 83
8.3 Future directions 83

Page

APPENDIX

A. Description of Selected Farming Systems Research Programs 86

A1. International Institutes 86

A1.1 CIMMYT, Mexico 86
A1.1.1 Basic orientation 86
A1.1.2 Program components 87
A1.1.3 Observations 89

A1.2 ICRISAT, India 90
A1.2.1 Basic orientation 90
A1.2.2 Program components 91
A1.2.3 Observations 93

A1.3 IRRI, Philippines 94
A1.3.1 Basic orientation 94
A1.3.2 Program components 95
A1.3.3 Observations 98

A1.4 IITA, Nigeria 98
A1.4.1 Basic orientation 98
A1.4.2 Program components 99
A1.4.3 Observations 100

A1.5 CIAT, Colombia 101
A1.5.1 Current orientation 101
A1.5.2 Program components 102
A1.5.3 Observations 103

A2. Regional Institutions 105

A2.1 CATIE, Costa Rica 105
A2.1.1 Basic orientation 105
A2.1.2 Program components 106
A2.1.3 Observations 107

A3. National Farming Systems Programs 109

A3.1 ICTA, Guatemala 109
A3.1.1 Basic orientation 109
A3.1.2 Program components 110
A3.1.3 Observations 112

A3.2 ISRA, Senegal 113
A3.2.1 Basic orientation 113
A3.2.2 Program components 114
A3.2.3 Observations 115
A3.2.4 Reorganization of ISRA 116

Page

A3.3 ICA, Colombia 117
A3.3.1 Basic orientation 117
A3.3.2 Program components 118
A3.3.3 Observations 119

B. Farm Management Research 121

SELECTED BIBLIOGRAPHY 123

LIST OF ACRONYMS 135

LIST OF FIGURES

Figure	Page
1. Schematic representation of some determinants of the farming system	7
2. Schematic framework for farming systems research at the farm level	12
3. Scope of activities of FSR programs in selected national, regional and international institutes	24

PREFACE

This state-of-the-art paper is the second in a series of papers on farming systems research (FSR) in the Third World. The objectives of the paper are to: (a) review the literature on farming systems, (b) evaluate farming systems research in international institutes and in national agricultural research systems in the Third World, and (c) recommend what can be done to improve and expand FSR in order to develop technology that is appropriate for the majority of small farmers.

The authors discuss the confusion over the various definitions of FSR. They recommend a working definition which includes a holistic approach to diagnosing constraints faced by small farmers in site-specific locations, and in carrying out farm trials of promising technology. Stressing the strengths and weaknesses of current FSR programs, they warn of the dangers of overselling FSR and of setting up separate FSR departments; they advocate instead a close working link between FSR and commodity research teams.

The lessons from agricultural sector studies in the 1970s should be taken into account as FSR expands in the 1980s. Agricultural sector studies failed to gain credibility in the 1970s because the micro research base was often inadequate to support macro models. Hence FSR could easily lose its credibility if micro research is not supplemented by macro research on the political, economic, and institutional constraints on small farmers in the Third World.

A major section of the paper deals with rapidly evolving methodologies for carrying out FSR. FSR is not inexpensive. And critics are raising valid questions about its cost effectiveness. But one can only speculate on the costs and returns of FSR as compared with the traditional "top-down" experiment station research approach that has proven so capable of serving commercial farmers. For example, while the top-down approach has been effective in serving Zambia's 300 commercial farmers, it has failed to reach Zambia's 500,000 small farmers. The challenge is how to serve the majority of small farmers. This question involves both sides of the equation--costs and returns. Whereas the traditional research approach involves heavy capital

PREVIOUS PAGE BLANK

outlays for experiment station buildings and equipment, FSR requires major recurrent costs to support site-specific research teams. MSU will publish a paper in 1981 on the cost effectiveness of FSR compared with the top-down research approach.

A number of innovations are currently reducing the cost of FSR. In many countries FSR teams are using 2-4 week reconnaissance surveys ("sondeos") to identify the major problems facing small farmers. But reconnaissance surveys must be supplemented by frequent interviews of farmers ("cost route surveys") over a full year, followed by less frequent interviews over 3-5 years as new technology is tested by farmers. Since frequent interviewing techniques involve recurrent costs that are increasing rapidly (e.g., petrol costs $3 to $4 a U.S. gallon in many Third World countries), it is necessary to shift to less intensive methods of data collection. For this reason, a Michigan State University research team in Eastern Upper Volta has recently shifted from weekly interviews of small farmers to interviewing rice farmers 14 times per year--once for each of the 14 activities (e.g., planting, weeding) involved in the production of rice. The results of the MSU survey will be available in mid-1981 and will provide a comparison of the cost and accuracy of weekly interviews with the "activity" approach.

Improvements are needed to speed up data processing and in publishing results. The FAO[1] is developing standardized terminology for farm management concepts in French, English, and Spanish and has developed pre-coded questionnaires and a standardized computer program. This program can be used in different ecological zones and countries to generate partial and whole farm budgets, and crop and livestock enterprise tables on a farm by farm basis, as well as the usual sample averages. A growing number of Third World countries are now using micro-computers in farm surveys. The strengths and weaknesses

---

[1] K. H. Friedrich, Farm Management Data Collection and Analysis: An Electronic Data Processing, Storage and Retrieval System. Rome: FAO, 1977. For information about FAO's program of work, write to Neal Carpenter, Chief Farm Management and Production Economics Service, FAO, Via delle Terme di Caracalla, 00100 Rome, Italy.

of micro-computers will be assessed in a MSU Rural Development Paper in 1981.

The third paper in this FSR series, "CIMMYT's Experience in Facilitating Farming Systems Research in Eastern and Southern Africa," is being prepared by Michael Collinson and will be published in late 1980.

Carl K. Eicher, Director
Alternative Rural Development
Strategies Project

ACKNOWLEDGMENTS

The preparation of this paper has proved to be a valuable learning experience for us. In undertaking the assignment, which was requested by Michigan State University, we found much of the material required was not readily available. In some cases the material available could not easily be traced to a written source, which is not surprising because farming systems research is rapidly evolving. So a great deal of emphasis has been placed on comments by individuals currently engaged in, or interested in, farming systems research. We would like to express our gratitude to the following who spent so much time reviewing drafts of this monograph: D. Baker, J. Bingen, D. Byerlee, C. Charreau, M. Collinson, E. Crawford, P. Crawford, C. Davis, C. Eicher, J. Faye, S. Franzel, W. Freeman, H. Gilbert, A. Hansen, H. Hays, P. Hildebrand, G. Johnson, J. Kampen, B. Michie, L. Navarro, J. Ryan, J. Sanders, W. Shaner, J. Sjo, B. Stavis, T. Van Schillhorn, W. Vincent and H. Zandstra. We may not have done complete justice to all the comments of reviewers, so deficiencies remaining in the manuscript should be attributed to us alone.

Contribution number 80-401-A, Department of Agricultural Economics, Agricultural Experiment Station, Kansas University, Manhattan, KS 66506.

PREVIOUS PAGE BLANK

1. INTRODUCTION

Increasing empirical evidence shows that the needs of small farmers often have not been adequately addressed in development programs in the Third World over the past twenty years (Khan, 1978; Poleman and Freebairn, 1973). Many development projects have been introduced without sufficient understanding of the environment in which small farmers operate. The chequered pattern of success is traceable in part to the way research has been organized and undertaken in low income countries (Longhurst, Palmer-Jones, and Norman, 1976). Public investment in agricultural research has not always been spent with the needs of small farmers--who should be the major customers of the results of such research--in mind.[1] Instead allocation of funds often has been based on:

(1) Expressed needs of more influential farmers[2] who often hold nonagricultural jobs in the society.

(2) Research that will appeal to professional "peer groups" of the researchers.

(3) Types of technology that have been developed in high income countries.

Therefore the link between the small farmers and the research organizations has tended to be weak (Stavis, 1979). Traditionally this interaction should have been facilitated via the extension worker, but for a number of reasons this has not often worked. Two possible reasons are:

(1) Institutional and administrative barriers which prevent effective interaction between researchers, extension workers and farmers.

---

[1]Anderson (1979) gave an excellent analysis of the factors influencing misallocation of research resources in many LDC's.

[2]Some have argued that this tendency has been present in agricultural research at some of the Land Grant Universities in the U.S. (Hightower, 1972; Heady, 1973).

(2) Researchers in the Third World often have higher academic qualifications than extension staff, thereby reinforcing a tendency toward top-down prescriptions--from research workers to extension workers to farmers.

The quest for an efficient way of developing more relevant research programs for small farms is analogous to the process used by commercial firms producing a product for sale; that is, ascertaining what the consumers or customers want. The farming systems research approach starts with the farmer and provides a link between the farmer and the research institution and funding agency, thus counterbalancing the more conventional "top-down" experiment station research approach.[1] The farming systems approach has the potential of providing the customers, in this case small farmers, with an avenue for communicating their needs, both to research workers and to funding agencies.

1.1 DEFINITION OF FARMING SYSTEMS RESEARCH

The primary aim of the FSR approach is to increase the productivity of the farming system in the context of the entire range of private and societal goals, given the constraints and potentials of the existing farming systems. Productivity can be improved through the development of relevant technology and complementary policies which increase the welfare of farming families in ways that are useful and acceptable to them and society as a whole. Farming systems research (FSR) has the following characteristics:[2]

(1) Farming systems research views the farm or production unit and the rural household or consumption unit--which in the case of small farmers are often synonymous--in a comprehensive

---

[1]The FSR approach is, therefore, more realistic in orientation than the more conventional reductionist approach exemplified by commodity research programs. The reductionist approach involved studying one or two factors at a time while attempting to control all others (Dillon, 1976).

[2]We are grateful for the help of Shaner (personal communication) in delineating these characteristics.

manner.[1] FSR also recognizes the interdependencies and interrelationships between the natural and human environments.[2] The research process devotes explicit attention to the goals of the whole farm/rural household[3] and the constraints on the achievement of these goals.

(2) Priorities for research reflect the holistic perspective of the whole farm/rural household and the natural and human environments.

(3) Research on a sub-system[4] can be considered part of the FSR process if the connections with other sub-systems are recognized and accounted for.

(4) Farming systems research is evaluated in terms of individual sub-systems and the farming system as a whole.[5]

A variety of research and development activities falls under the definition of farming systems research. In addition some research programs (e.g., commodity research programs) are not described as FSR programs, but they exhibit most or all of the characteristics listed in our definition. The focus of this paper is on research which includes the four characteristics in our definition of farming systems research.

---

[1]As we discuss later (Section 2.2), we would prefer to confine the use of the term FSR to research that has not only the characteristics listed but also the active participation of the farmer in the research process.

[2]This ensures some consistency between the unit managed by the farming family and the unit studied in agricultural research programs (Hart, 1979b).

[3]In the paper we use the term farming household or farming family to stress the production and consumption interrelationships (see Section 2.1).

[4]Sub-system implies a boundary separating the system from its environment. Two systems may share a common component or environment and one system may be a sub-system of another. So a farm system can be broken down into a number of sub-systems--for example, crops, livestock, and off-farm--which may overlap and interact with each other (Technical Advisory Committee, 1978).

[5]The farming system reflects the resolution of the conflicts between the goals of, and the constraints faced by, the farming household.

1.2 ORIENTATION AND OUTLINE OF THE PAPER

We have approached this review of FSR with definite notions about the role FSR should play, the breadth of its activities, and its relationship to existing agricultural and rural development institutions. We believe that:

(1) FSR is a unique and potentially significant approach that can greatly increase the effectiveness of agricultural research and development programs in the Third World. FSR has antecedents in farm management activities in the U.S. during the first half of the century (see Appendix B) and in the community development programs of the post-World War II period (Holdcroft, 1978). FSR includes some characteristics of both approaches.

(2) FSR concentrates on the individual farming family, which necessitates a multidisciplinary team of researchers, farmers, and extension workers interacting at the local level. Thus the goals/objectives of the farming household tend to take precedence in the process of designing improvement measures. The importance of governmental policy--objectives and societal concerns such as environmental quality--is recognized, but to effectively incorporate the concerns requires strong linkages with existing institutions that are specifically responsible for such matters, including planning ministries, ministries of agriculture and natural resources, and universities.

(3) Although FSR is holistic in its orientation, the degree of comprehensiveness of FSR in practice is tempered by the state of development of FSR methodology, resource availability, and the limitations of agricultural-development planning in the Third World.

(4) FSR has its institutional roots in the agricultural research institutes and thus has a bias toward bio-technical modifications in farming systems, although there is increasing recognition that changes in nontechnical factors such as markets, pricing policy, institution, and infrastructure are often extremely important.

(5) The operational perspective of our discussion is that of the researcher and rural development practitioner at the local level rather than the theoretician. While we acknowledge contributions made by researchers in understanding the nature of agricultural systems through systems analysis, our focus is upon FSR which forms a direct input into the design and implementation of development programs at the local level.

(6) Effective FSR activities require close links with strong commodity and disciplinary agricultural research programs. We believe that the results of FSR will enrich commodity and disciplinary research programs and provide inputs into development programs designed by FSR teams at the local level. FSR is not intended to replace either of these agricultural research activities.

(7) The focus should be on the possible and practical rather than what would be ideal. For example, the conceptual framework for FSR in Chapter 2 is couched more in terms of the desirable and achievable rather than the perfect. Our review of existing FSR programs summarized in Chapter 3 reveals that some existing programs already contain many features of our "ideal" program. The discussion of methodology in Chapters 4 and 5 is not intended as a definitive and comprehensive treatment of methodological problems and their solutions, but rather a review--with commentary--on sometimes contrasting approaches to specific aspects of FSR gleaned from the published and unpublished observations of many practioners. Similarly, the discussion of institutional issues and training activities in Chapters 6 and 7 focuses on the practical problems of initiating and maintaining FSR programs within the framework of existing institutions.

2. AN OVERVIEW OF FARMING SYSTEMS RESEARCH

In this chapter we define what a farming system is, offer a schematic framework for conducting FSR, and discuss some of the distinguishing features. The proposed approach discussed in this section may differ from actual programs because of the compromises that must necessarily be made in implementing a FSR program.

2.1 DELINEATION OF A FARMING SYSTEM

A system can be defined conceptually as any set of elements or components that are interrelated and interact among themselves. Thus a farming system is the result of interactions among several interdependent components. At the center of the interactions are the farmers themselves, whose households or families and means of livelihood are intimately linked and must not be separated. That is one reason why we frequently refer to the farming family rather than just the farmer.[1] For achieving a specific farming system, farming families allocate certain quantities and qualities of basic types of inputs--land, labor, capital, and management--to which they have access, to three processes--crop, livestock, and off-farm enterprises--in a manner which, given the knowledge they possess, will maximize attainment of the goal(s) they are striving for (Norman, Pryor, and Gibbs, 1979).

Figure 1 illustrates some of the possible underlying determinants of the farming system. The "total" environment in which farming households operate can be divided into two parts: the technical element and the human element (Norman, 1976).

The types of, and physical potentials of, livestock and crop enterprises will be determined by the technical element, which reflects what the potential farming system can be and therefore provides the necessary condition for its presence. In the past the technical element received most attention, particularly from technical scientists. They have, within certain limits, been able to modify the technical

---

[1] In addition there are often multiple decision makers within a particular household (Newman, Ouedraogo and Norman, 1980).

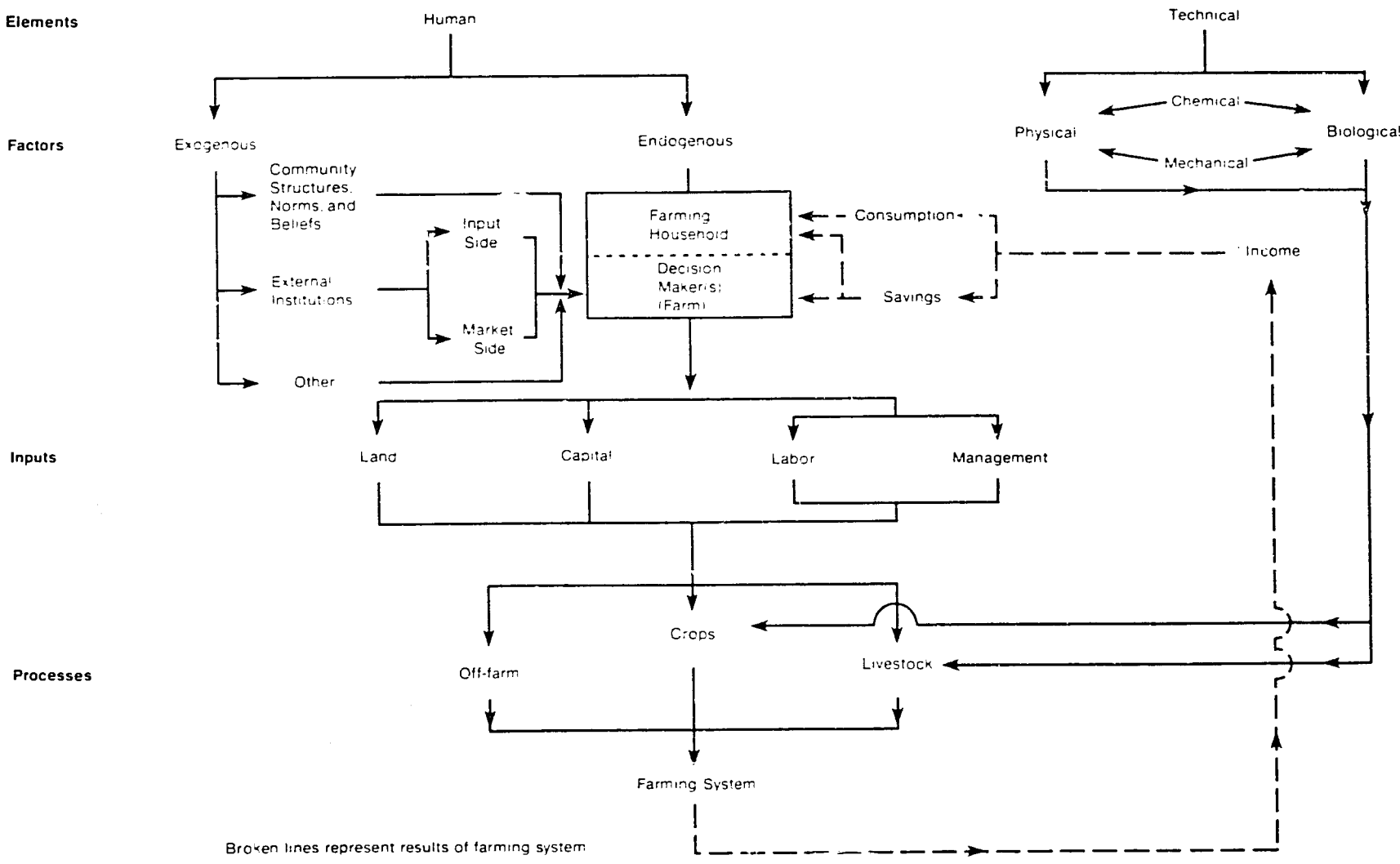

Figure 1 Schematic Representation of Some Determinants of the Farming System

element and improve the potential farming system by developing technologies that partially alleviate the deficiencies in the technical element.

The technical element can be divided into two factors: physical and biological.[1] Physical factors are water, soil, solar radiation, temperature, etc. Technical scientists, for example, can enhance water availability through irrigation (i.e., through the use of mechanical techniques), or soil quality through fertilizer application (i.e., through the use of chemical techniques). Biological factors are crop and animal physiology, disease, insect attack, etc. Examples of limited intervention of technical scientists in this area would include breeding early-maturing crop varieties and varieties that resist disease.

The farming system that actually evolves, however, is a subset of what is potentially possible as defined by the technical element. The determinant that provides the sufficient condition for the presence of a particular system is the human element, characterized by two types of factors: exogenous and endogenous.[2]

The exogenous factors that largely influence the farming systems in any given community are the social, economic, and political institutions in the area--all largely outside the control of the individual farming household. Yet all directly influence what the farming household or individual members can and cannot do. The exogenous factors can be classified into three broad groups:

(1) Community structures, norms, and beliefs. Local institutions and beliefs often directly affect the acceptability of specific development strategies. For example, processing of certain food crops may be the responsibility of the women, while operating machinery is the responsibility of the men. In

---

[1]The technical element can be considered as an exogenous factor even though the "exogenous factors" in the text refer only to those under the human element.

[2]The technical element can affect the ways the human element evolves. For example, in pastoral communities in Africa technical considerations such as limited rainfall dictate the predominance of grazing activities in certain areas, which in turn influence community structures, norms, and beliefs and other exogenous factors, including population density.

such a situation introduction of processing equipment is faced with certain difficulties.

(2) External institutions. The two main types of institutions influencing farming decisions are the input supply system and markets where the farmers can sell or trade their commodities. On the input side, in the developing areas of the world, programs such as extension, credit, and input distribution systems are often financed and manned by government and, therefore, reflect its policies. On the farm product side, government may directly (e.g., marketing boards) or indirectly (e.g., improving evacuation routes, transportation systems, etc.) influence the prices farmers receive.

(3) Other influences such as location and population density.

Endogenous factors, on the other hand, are those the individual farming household to some degree controls, including the four basic types of inputs mentioned earlier--land, labor, capital, and management.[1] It is important to recognize that these resources vary among households, regions, and countries on the basis of both quantity and quality, both of which influence the performance and potential of the system. In addition these inputs or resources may or may not be owned by the household. Access to one or more of these resources may be on another basis of use, which may limit or restrict the ease or intensity of use and thus, in turn, affect the goals and performance of the farm family.

Farmer goals and motivation are critical endogenous factors that may profoundly affect the nature of the farming system, particularly in situations where a range of options or enterprise combinations is consistent with the existing technical element and exogenous factors. Farmer goals and motivation are in another respect the motor that drives the entire system--that gives it a dynamic dimension. Even where changes in the technical element (e.g., drought) and exogenous factors (e.g., civil war) force alterations in the farming system, farmers still

---

[1]Management might be considered as a special type of input that serves as a mechanism to implement decisions regarding farming activities made by the farm family as it selectively employs the other inputs--land, labor, and capital.

have options, so the resulting choices are invariably strongly influenced by individual goals and motivation.

The farming system obviously is complex, which explains why some technology thought to be relevant often has not been adopted, or when it has, why the degree of adoption varied widely. Not considering the human element in agricultural research has contributed to many so-called "improved" technologies being irrelevant.

2.2 "UPSTREAM" AND "DOWNSTREAM" FSR

Two types of farming systems research programs have emerged in recent years; namely "upstream" and "downstream". We believe there is a fundamental difference between the objectives and nature of activities for the two types of programs. "Upstream" FSR seeks to generate prototype solutions which will facilitate major shifts in the potential productivity of farming systems. "Upstream" research often involves several years of research, both on and off station, and is particularly the concern of the International Agricultural Research Centers (IARCs) and selected regional research programs. "Downstream" or site specific FSR programs are designed to rapidly identify and subsequently test possible innovations which can be easily integrated into existing farming systems. "Downstream" FSR focuses on close interaction with farmers via on-farm trials and draws selectively upon results from commodity, discipline oriented research or "upstream" programs.[1] Downstream FSR programs are commonly carried out within the context of a national agricultural development project or research institute.

In this paper we have chosen to discuss both "upstream" and "downstream" FSR programs while concentrating on "downstream" FSR. More detailed discussion of the two types of FSR programs is contained in Chapter 3.

---

[1]Our own bias, which P. Crawford (personal communication) shares, would be to confine the use of the term FSR to studies characteristic of "downstream" FSR (i.e., those including the whole farm perspective [Section 1.1] and the active participation of the farmer). The farmer rarely participates actively in "upstream" FSR--particularly in the early stages of the research process. However, since the term FSR is now commonly used to denote both the "upstream" and "downstream" variants, we are reluctant to redefine it to suit our own bias.

2.3 SCHEMATIC FRAMEWORK FOR A "DOWNSTREAM" FSR PROGRAM

A schematic framework for a "downstream" FSR program is given in Figure 2. Four stages of research can be delineated as follows:[1]

(1) The descriptive or diagnostic stage in which the actual farming system is examined in the context of the "total" environment--to identify constraints[2] farmers face and to ascertain the potential flexibility in the farming system in terms of timing, slack resources, etc. An effort is also made to understand goals and motivation of farmers that may affect their efforts to improve the farming system.

(2) The design stage in which a range of strategies are identified that are thought to be relevant in dealing with the constraints delineated in the descriptive or diagnostic stage.

(3) The testing stage in which a few promising strategies arising from the design stage are examined and evaluated under farm conditions, to ascertain their suitability for producing desirable and acceptable changes in the existing farming system. This stage consists of two parts: initial trials at the farm level with joint researcher and farmer participation, then farmer's testing with total control by farmers themselves.

(4) The extension stage in which the strategies that were identified and screened during the design and testing stages are implemented.

In practice there are no clear boundaries between the various stages. Design activities, for example, may begin before the descriptive and diagnostic stages end and may continue into the testing stage, as promising alternatives emerge during the trials at the farm level--where farmers and researchers interact directly. Similarly, testing by farmers may mark the beginning of extension activities.

---

[1]Although the primary focus of the schematic framework is the "downstream" FSR program, there are major similarities to "upstream" FSR.

[2]The complexities surrounding the constraint issue are discussed later (Section 4.5).

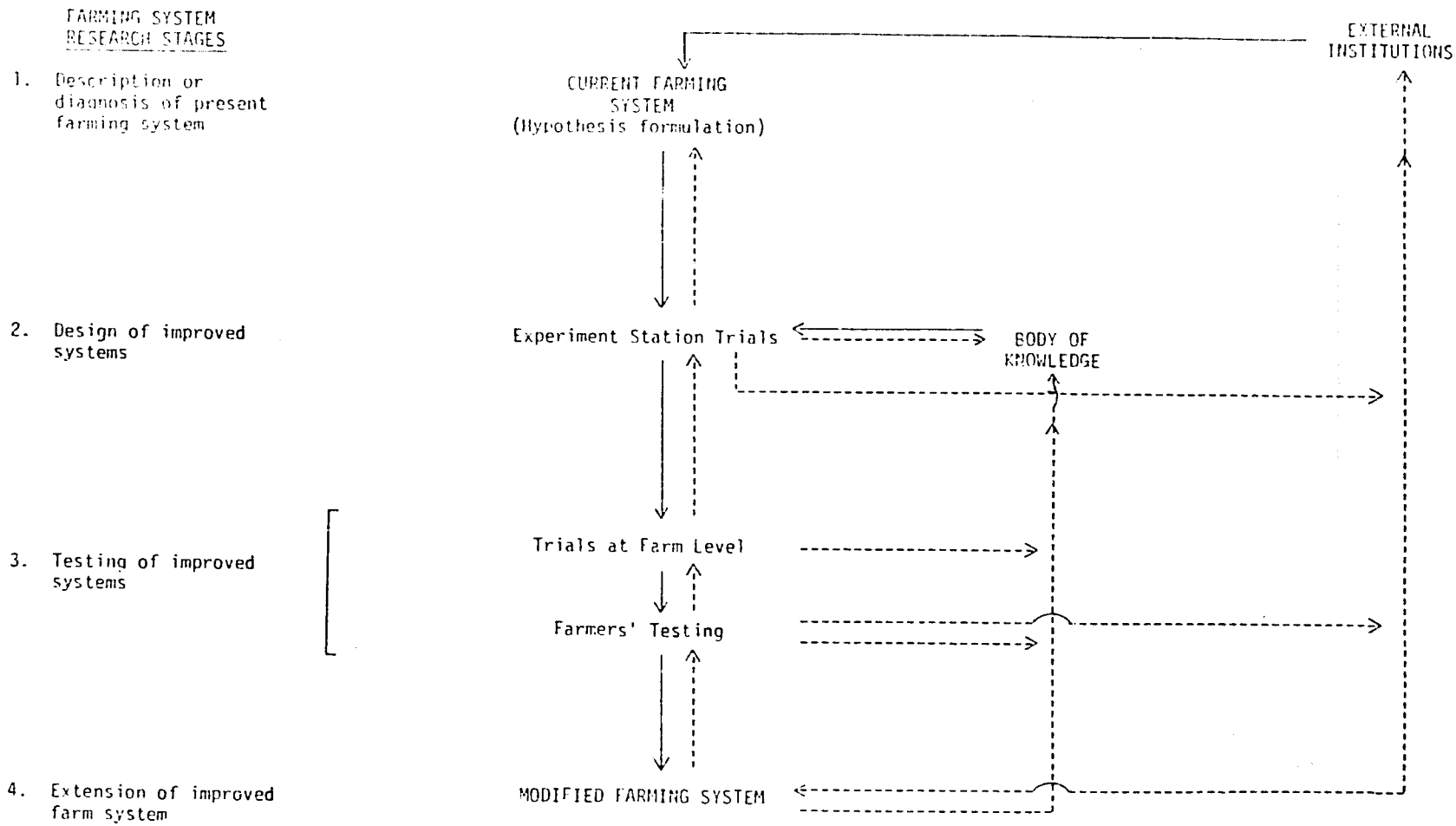

Figure 2 SCHEMATIC FRAMEWORK FOR FARMING SYSTEMS RESEARCH AT THE FARM LEVEL
(Downstream Farming Systems Research)

2.4 ATTRIBUTES OF THE "DOWNSTREAM" FSR APPROACH

Some of the important attributes of "downstream" FSR are now discussed.

2.4.1 Consideration of family objectives

The objectives of the farmer (farming family)[1] are directly incorporated into the designing and testing of strategies. An attempt is made to understand the farmer's objective function in the initial descriptive or diagnostic stage. The farmer directly participates in all stages except possibly the design. This ensures evaluation criteria relevant to the farmer, rather than simply the conventional returns-per-unit-of-land so often used. Also the FSR approach recognizes that farmer objectives may change over time. For example, as development proceeds, the importance of community norms and beliefs in shaping individual farmer goals may diminish. As the FSR approach is used in designing successive generations of strategies, changes in farmer objectives can be incorporated in the process.

2.4.2. Incorporating community and societal goals

The FSR approach views farmers both as individuals and as members of the larger community and society. Thus the approach links the micro perspective with broader societal considerations in the process of designing development strategies. Such strategies may involve single innovations proposed for adoption by farmers, such as improved seeds, or policy changes that alter fertilizer subsidy levels.

Societal goals could include maintaining soil fertility to enable the land resource to be used by future generations, avoiding an increase in inequality of income distribution, and other goals. But it is

---

[1] It is generally assumed that the objectives of the farmer--usually the head of the family unit--reflect those of the farming family as a whole, so the terms farmer and farming family are often used interchangeably. However, that may not be true of other members of the family with fields under their own control (Newman, Ouedraogo, and Norman, 1979).

likely that such goals are not going to be achieved simply through the development of improved technologies or practices that reflect the heterogeneity that exists in the farming community. For example, it is likely that, ceteris paribus, farming families with better quality resources and easier access to external institutional support systems will still progress more rapidly. Nevertheless the development of improved practices relevant to farming families in less fortunate circumstances can at least slow down the increase in inequalities of income distribution. In such cases a more positive effect of the application of FSR may involve influencing changes to be made in agricultural policy and in the operations of farmer-contact agencies. Although the potential exists for FSR to be of value in such areas--in addition to its current application in the development of improved practices--there are as [illegible] no examples where it has been systematically applied in this fashio[illegible]

2.4.3 Tapping the pool of knowledge of the society

FSR recognizes that the potential benefactor (the farmer) must be an integral part of the research process. The concept explicitly recognizes the value of the farmers' experience (Swift, 1978) and their traditional experimentation (Johnson, 1972; Jodha, Asokan, and Ryan, 1977) as inputs into developing strategies for improving the productivity of existing farming systems.

Many changes envisioned in FSR involve small adjustments rather than complete changes in the farming system. In addition, even greater reality is encouraged in the research process through maximizing research under actual farm conditions. When testing improved technology, the managerial input is initially provided by the research worker--trials at the farmer's level (Figure 2); and then, often later, by the farmer himself--farmer's testing.

The link with the extension worker in such work activity is vital (Asian Cropping Systems Working Group, 1979; Navarro, 1979). Extension

---

[1] Further discussion on this is presented in Sections 4.2 and 6.1.1.

workers' knowledge about the local situation at the farm level and the responsibilities they eventually will have for disseminating the results of FSR, make it imperative that extension workers be involved, or at least consulted, at each stage of the FSR process. Interaction with the research team has another benefit for extension workers. In many countries they have been taught to tell farmers what they should do rather than to listen and to help farmers through dialogue with them (Belshaw and Hall, 1972), which is so important in the FSR approach.

Research workers often have cut themselves off from such valuable knowledge and wisdom. As a result, researchers often spend considerable time "rediscovering the wheel" rather than building on the knowledge that farmers and extension workers already possess.

An example is the practice in many LDC's of farmers growing crops in mixtures; that is, more than one crop at the same time. For many years that practice was considered by many agricultural scientists and, for that matter, by officials in ministries of agriculture as "primitive" and not compatible with "modern" agriculture. So it was not considered worthy of serious research endeavor. However, efforts in many parts of Africa to encourage farmers to plant single crops of improved varieties alone often have failed. Why? The results of surveys in northern Nigeria indicate that under indigenous technological conditions it was rational for farmers to grow crops in mixtures when either labor or land was limited. Mixed cropping proved to be more profitable than single crops and to yield a more dependable return (Norman, 1974). Belatedly, considerable interest in mixed cropping with improved technology has developed amongst technical scientists (Monyo, Ker, and Campbell, 1976). Many of the results confirm the methods that farmers evolved over generations (Willey, 1978). Undoubtedly much more progress with mixed cropping could have been made if the pool of knowledge possessed by farmers had been tapped earlier.[1]

---

[1]A contribution from Collinson (personal communication) makes the same point quite succinctly:

> "I find both scientists and administrators don't really understand what farmer participation can imply. I often give a hypothetical dialogue between farmer and agronomist to show what it can be.

(continued on next page)

2.4.4 Recognition of the locational specificity of the technical, exogenous, and endogenous factors

The FSR approach involves breaking heterogeneity into homogeneous subgroups and developing strategies appropriate to each. The disaggregation into homogeneous subgroups is first done according to ecological systems or to differences in the technical element; then, if further disaggregation is necessary, differences in the human element may be basis for subgrouping (Section 5.1.3). The aim of such dissaggregation is that, in terms of interest to researchers, the variance between subgroups be maximized and within them minimized, and that the classification be useful as a guide to developing relevant strategies (Technical Advisory Committee, 1978). The constraint(s) most limiting in the farming system of each subgroup as revealed by analyzing the results then become the focus of research efforts.

Footnote 1 cont.

(a) Agronomist: - We thought of having three cowpea to each maize plant in this treatment.

(b) Farmer: - What would I do with all those cowpeas, there's no market and we only eat about 1/5 by weight of maize?

(c) Agronomist: - OK let's reduce to say equal maize and cowpea to give a ratio close to the weights needed - we thought of putting the cowpeas in the row between the maize plants which are one foot apart.

(d) Farmer: - but that only leaves 6 inches between the maize and the bushy cowpea plant - how can we get our hoes in for weeding?

(e) Agronomist: - OK what about putting the cowpeas in between the plants within the maize rows?

(f) Farmer: - Well we weed by putting the hoe between the maize plants and pulling weeds into the interrow - it will slow us down a lot.

(g) Agronomist: - So what do you suggest?

(h) Farmer: - Why not put the cowpea seed in the same hole as the maize seed as we do now?"

2.4.5 The dynamic and iterative nature of FSR

The research process is recognized as being dynamic and iterative, with backward linkages among farmers, research workers, and sponsoring agencies rather than simply the presence of forward linkages characteristic of the "top down" approach.

An example from northern Nigeria illustrates both the iterative process and inefficiencies that can arise in allocating research resources if a farming system perspective is not maintained. Traditionally cotton, often grown in mixtures, is planted after the peak labor demand period in June-July is partially past and priority has been given to planting and weeding food crops. Growing cotton according to the recommended practices--which were drawn up in the absence of a farming systems approach--involved planting earlier sole stands, and called for fertilizer and spraying six times with a knapsack sprayer that used 225 litres of water per hectare each time. Ex post FSR revealed why farmers in general were not adopting the recommendations in their entirety (Beeden et al., 1976). On average the net return per hectare was higher from growing cotton according to the recommended practices, but the improved cotton technology needed to be planted earlier in June and July when food crops were being planted and weeded. Although the return per man-hour of labor on an annual basis was higher, the return during the June-July labor bottleneck period was lower for improved cotton than cotton grown according to traditional practices. That, and the large amount of water required for spraying, no doubt accounted for the farmers' lack of interest in the improved cotton technology. The ex post FSR revealed that farmers were not comparing the improved technology with traditional cotton technology, but with the alternative of devoting labor to other enterprises--in this case, food crops.

The above results of ex post FSR lent support to the development of a modified technology under which cotton could be planted later when it fitted in better with the traditional farming system. Also recommended was replacing a water-based insecticide with an oil-based one that could be applied with an ultra low-volume sprayer (Beeden, Hayward, and Norman, 1976). Understanding of the farming system and the constraints

faced by farmers, as envisioned in a true FSR approach, would no doubt have reduced the research resources devoted to developing a relevant improved cotton technology.[1]

2.4.6 The integrative and multidisciplinary nature of FSR

Most past agricultural research in developing countries has been based on narrow disciplinary approaches, which left farmers the difficult task of integrating new information into their farming systems (Technical Advisory Committee, 1978). Collinson (1979a) gave an example of how impractical that sometimes can be. At one research institution in East Africa, commodity-orientated research showed that the optimal planting time for six crops grown by local farmers was the first week after the rains began. Using hoes, farmers could prepare only one-third hectare during that week. If farmers had stopped planting then, their income would have dropped 80 percent.

FSR provides a means by which multidisciplinary teams of researchers can examine problems of the farming system, including complementary and supplementary relationships between resources and enterprises. With fossil energy costs increasing, the possible ramifications of this are obvious. Such interactions have rarely been exploited in the reductionist approaches to developing improved technology. It has been suggested that if researchers overlook these interactions there may be adverse effects on specific enterprises. For example, it was agreed at a recent workshop (McDowell and Hildebrand, 1980) that small livestock have been adversely affected in some research on cropping systems. The necessity of recognizing and focusing on the interaction of the technical and human elements and fully appreciating the multiple use of resources requires a multidisciplinary team working in an interdisciplinary manner.[2] The

---

[1] An excellent example of the value of FSR in improving the efficiency of research resources through systematic analysis of labor input in relation to crops--in the case maize and sorghum--and rainfall patterns is illustrated by work in central Tanzania (CIMMYT, 1977).

[2] Multidisciplinary suggests involving several disciplines while interdisciplinary connotates the disciplines working together, rather than independently, in solving a specific problem.

social scientist should play an *ex ante* role rather than simply the traditional *ex post* role characteristic of the "top-down" approach. For example, in India, the *ex ante* likelihood of labor bottlenecks with improved watershed-based farming systems was demonstrated by Ryan *et al.* (1979). The improved systems are now being tested on farmers fields in cooperation with AICRPDA. The team, including both technical and social scientists, needs to be involved at the first three stages of the research process and possibly some in the fourth stage.

2.4.7 Flexibility in accommodating both technical and nontechnical improvements in farming systems

Traditionally agricultural research has been rather narrowly focused on yield-increasing technical innovations for specific commodities. FSR is concerned with the productivity of the entire farming system and, as a result, it will examine nontechnical changes that are exogenous--factors like improving marketing arrangements for inputs and outputs. The flexibility inherent in the FSR approach also assists in linking macro and micro perspectives in designing strategies more effective for specific rural areas or groups of farmers. National policies like pricing and trade policies that affect agricultural producers may be explicitly considered when diagnosing existing farming systems and designing improvements. Changes in such policies may be the most critical ingredient in efforts to improve the lives of small farmers.

2.4.8 Complementing existing traditional research approaches

The farming systems research approach is not intended to replace basic and applied research or what can be described as the "body of knowledge" (Figure 2). Also, the "body of knowledge" will be augmented by FSR as follows. First, the results of the FSR approach in a specific area may be applicable, with some modification, to other areas with similar environments. Second, the variant of FSR that is "upstream" can be used to develop prototype solutions, usually in the form of packages of practices that address themselves to common constraints

facing a broad range of farming systems across one or more geographic regions. For example, the Cropping Systems Program of IRRI seeks to develop practices that will facilitate intensifying rice cropping systems throughout South and Southeast Asia, as scarcity of land is an overriding problem throughout most of those regions (IRRI, 1978). Similarly, the Farming Systems Program at ICRISAT focuses on improving watershed-management practices because water is a critical common constraint in the semi-arid tropics (Krantz, 1979). Such prototype "solutions" become part of the "body of knowledge" applying the FSR approach to a local situation.

The complementary nature of other research approaches in contributing to the "body of knowledge" is underlined in "downstream" FSR, which draws upon this information in the process of designing practices or recommendations suited to the specific local situation in the immediate future.

3. REVIEW OF FARMING SYSTEMS RESEARCH PROGRAMS

The upsurge in interest in FSR is largely a product of the 1960s and 1970s. Thus, of the fewer than twenty FSR programs in the Third World at present, most are fairly young and still in formative periods. In many instances, programs are still in the process of defining a research focus and developing methodologies. The differences among existing FSR programs reflect in large part the diversity of the institutions involved: their histories, objectives, and scope of responsibilities--national, regional, and commodity foci. While common features emerge, certain important differences remain. This section examines the scope of FSR programs and distinguishes between the two major types of programs, namely basic, general or "upstream" variety and the site specific or "downstream" type. As noted earlier, this paper focuses on "downstream" programs but the principal features of both types are reviewed in this section. Summaries of FSR activities at selected institutions including ICTA (Guatemala), ICA (Colombia), ISRA (Senegal), CATIE (Central America), and selected IARCs (CIMMYT, IRRI, IITA, CIAT, and ICRISAT) are in Appendix A.

3.1 SCOPE OF ACTIVITIES OF FSR PROGRAMS

Most FSR programs are still confined to developing technology for the crop subsystem as a consequence of the crop mandate of some research institutes (e.g., CIMMYT and IRRI), the current state of FSR methodology, and the scarcity of researchers with FSR experience. Some scholars (Boer and Welsch, 1977) have appealed for livestock to be included in the process, but the approach has rarely been applied to the livestock subsystem except where it impinges directly on the crop subsystem. ILCA is now engaged in FSR on the livestock subsystem while ISRA in Senegal and CATIE in Costa Rica are addressing crop-livestock interactions. CIAT is pursuing limited FSR for both swine and cattle. Excluding or assigning low priority to livestock research has been a subject of considerable debate centering on the future of livestock in the developing world under conditions of land scarcity, high population growth rates, poverty, and staple food deficits. Since livestock is

an integral part of the farming systems of most of the world's population, we believe it should be given due consideration in applying the FSR approach.[1]

In addition to the subject focus of FSR programs is the issue of sequencing research activities. Ideally, agricultural research might be conceived of as a smooth continuum of interconnecting activities as follows:

(1) Analyzing the existing situation.
(2) Initiating of basic lines of research.
(3) Developing broadly generalizable solutions.
(4) Adapting solutions to specific situations.
(5) Initiating of action programs.

In reality, the process is disjointed because of the fragmented institutional responsibilities among national, regional, and international centers; variations in research methods required to generate solutions for different problems; and differences in the state of knowledge with regard to improved technologies for different commodities, enterprise mixes and geographic areas. For example, the existing body of knowledge is more likely to offer readily available or easily adaptable solutions for monocultural farming systems for major grain crops than for complex intercrop situations involving a variety of less well known commodities or both crops and animals.

The "ideal" program in any given situation will probably involve some mixture of "upstream" and "downstream" features as determined in part by the availability of innovations which can be easily and rapidly integrated into existing farming systems. Where the pool of such innovations is large, a "downstream" program can be an effective mechanism to identify and adapt the most promising approaches. Conversely, where significant research of a more basic or general nature is required, an "upstream" program may provide an appropriate mode to organize the research effort in a fashion which cuts across traditional disciplinary and commodity lines. The appropriate mix may be achieved through linkages between different programs rather than attempts to combine

---

[1] For a discussion of integrating crop and animal production systems in an FSR context see McDowell and Hildebrand (1980).

both dimensions in the same program. At a minimum, there should be a two way flow of information from the farm level to research institutions and from the research stations to the farmers--possibly via "downstream" FSR programs--in the form of research results. In practice, links between both types of FSR programs on the one hand and commodity/discipline oriented research on the other are likely to be stronger than the links between "upstream" and "downstream" programs.

Figure 3 summarizes in a general fashion the scope of activities of FSR-type programs at selected national, regional and international agricultural research institutions.

3.2 "UPSTREAM" FSR: PROGRAMS AIMED AT PRODUCING GENERAL PROTOTYPE SOLUTIONS

The objective of "upstream" FSR programs is to find out how to overcome major constraints common to a range of farming systems extending across one or more geographic zones. The partial or total removal of a constraint such as water availability in arid areas and soil fertility in the humid tropics can significantly expand the range of enterprises and techniques which can be potentially utilized by farmers. Such programs mainly contribute to the "body of knowledge", rather than develop practices specifically tailored to a local situation. Prototype solutions produced by "upstream" FSR programs must be further adapted by "downstream" FSR programs to specific local conditions. Further, "upstream" programs may provide inputs into the establishment of research priorities for commodity improvement programs, since the "upstream" perspective is broader in terms of commodities and disciplines than commodity improvement programs. And their geographic perspective tends to be broader than that of "downstream" programs. Ultimately "upstream" programs should rely on feedback from "downstream" programs to sharpen their own research priorities or objectives. Extensive use of experiment station trials often characterizes "upstream" programs.

Most of the "upstream" FSR activities are found in international agricultural research centers (IARCs). Given the formidable array of methodological problems involved in "upstream" FSR now and the strong

Activity/Type of Knowledge, Technology Generated	Type of Research Institution: National						Regional		International					
	ICA	ISRA	ICTA	IAR	AICRPDA	IER	CATIE	ACSN	ILCA	CIMMYT	IRRI	ICRISAT	IITA	CIAT
"Upstream" 1. Component technology research	a	a	a	a	a	a			X	X	X	X	X	X
2. Research on prototype solutions involving integration of several components		X					X		X	X		X	X	X
3. Operational linkages with "upstream"/"downstream"/ commodity programs	X	X	X	X	X	X	X	X		X	X	X	X	X
4. Design/testing of immediate solutions for local situations	X	X	X	X	X	X				X				
"Downstream" 5. Treatment of non technical factors (eg., marketing, policy, etc.)	X	X							X	X		X		

[a]Virtually all national institutions are engaged in some form of component technology research, although not generally as part of FSR-type programs.

Figure 3 SCOPE OF ACTIVITIES OF FSR PROGRAMS IN SELECTED NATIONAL, REGIONAL AND INTERNATIONAL INSTITUTES

comparative advantage of national programs in "downstream" FSR, such a concentration may still be appropriate. Also, a large geographic zone of potential applicability can better justify mounting relatively expensive "upstream" programs because such zones often extend across national and regional boundaries.

Prominent examples of "upstream" FSR activities include the Farming Systems Programs of IITA and ICRISAT and the Cropping Systems Program of IRRI. For IRRI, the key constraint in the rice growing areas of South and Southeast Asia is identified as land, and the solution is crop intensification (Technical Advisory Committee, 1978). For ICRISAT, the important constraint for the semi-arid tropics is identified as water and the solution is better use of existing soil and water resources, with the focus on watershed units (Kampen, 1979b). For other centers, it has been difficult to identify constraints around which research programs could be built and which extend across a large area and several farming systems. The two centers--IITA and CIAT--serving the low land humid tropics of Africa and Latin America have had problems in that regard that stem from wide diversity in farming systems in their respective zones of responsibility. Difficulties at CIAT in achieving some focus contributed to terminating the farming systems program, although some of its activities have been integrated into the commodity research programs (Technical Advisory Committee, 1978). IITA is attempting to deal simultaneously with a broad range of constraints, including low solar radiation, erosion, drought stress, intense weed competition, low and declining soil fertility, and seasonal shortages of labor (IITA, 1979).

"Upstream" features are included in CATIE's mandate, and some in-depth work on understanding existing farming systems in the Central American Region has taken place (Hart, 1979a). However, CATIE remains primarily an institution assisting "downstream" national programs in its area of responsibility (Navarro, 1979).

3.2.1. Research on component technology

Although "upstream" programs aim at producing prototype solutions by integrating several components, much of the research to date has

been on individual components such as soil and water management, mechanization, and agroclimatology, and tends to be organized along disciplinary lines--as at IITA and ICRISAT, while cropping systems work of IRRI and CIAT is related to specific commodities.

Research at IITA and ICRISAT has taken place primarily within the individual sub-program areas, which deal with specific components, in part because of the need to assemble and analyze data on basic factor relationships in the environment. Such work is regarded as a necessary prerequisite to the design of prototype solutions. At ICRISAT such prototype solutions are taking the form of improved systems of soil and water management within watershed units. ICRISAT has initiated operational scale watershed-based, resource utilization research that cuts across sub-program areas (Technical Advisory Committee, 1978).

3.2.2 Operational linkages with national programs

Since most "upstream" FSR programs are still relatively young, they tend to be primarily in problem identification and solution design stages, with limited testing of prototype solutions, mostly at the research stations. At ICRISAT, specific soil and water management practices have been tested in watershed units on site, and limited off-site testing has been done via the All India Coordinated Research Project for Dryland Agriculture (Technical Advisory Committee, 1978). IITA has carried out tests of a variety of management practices on hydromorphic soils on site (Menz, 1979). Researchers in these programs are beginning to work systematically with national programs in adapting prototype solutions for possible eventual use in development programs for specific areas.

Some of CIAT's farming systems type research is carried out in cooperation with national programs, as is the case with the Beef Production Systems Evaluation Project in the Cerrado of Brazil and the Llanos of Colombia (CIAT, 1978). However, as noted previously, the main emphasis of CIAT's farming systems activities is to influence research priorities within the commodity improvement programs rather than to design and test prototype solutions.

IRRI's Cropping Systems Program is closely linked with national programs via the Asian Cropping Systems Network (ACSN), which facilitates extensive testing of prototype solutions in cooperation with national programs. The ACSN also serves as a conduit for information on farming systems in various countries in the region for the Cropping Systems Program, which assists in determining research priorities. A number of practices developed at IRRI, centering on means of intensifying rice cropping systems, have been adapted to local conditions in several countries and are now being extended to farmers (Technical Advisory Committee, 1978).

3.3 "DOWNSTREAM" FSR: PROGRAMS FOCUSING ON IMMEDIATE SOLUTIONS FOR SPECIFIC LOCAL SITUATIONS

As discussed earlier, "downstream" FSR programs begin with an understanding of existing farming systems and the identification of key constraints. However, in contrast to "upstream" programs, "downstream" FSR does not always seek to significantly alleviate key constraints in the short run, but instead identifies areas of flexibility in the specific system through accommodating innovations to the reality of existing constraints.[1] In so doing "downstream" FSR, as emphasized earlier, depends primarily on existing research results for testing and incorporation directly--or with relatively minor modifications--into farming systems. On-farm trials and direct or first hand interaction with farmers predominate while experiment station research tends to be minimal and restricted to adaptive rather than basic research.[2]

"Downstream" FSR programs form part of the activities of the following institutions--ICTA (Guatemala), ISRA (Senegal), CIMMYT, IRRI, CATIE, and ICRISAT. Since "downstream" FSR is the focus of other sections of this review, it is not further elaborated here.

---

[1]The example of cotton in northern Nigeria is described in Section 2.4.5.

[2]That is, research in the same institution in the FSR program as opposed to research in commodity programs, which might be primarily or exclusively on-site.

As already noted, existing FSR programs tend to focus on biotechnical modifications of farming systems. "Downstream" programs cover a wide range of approaches, from commodity focused programs to programs that attempt to develop comprehensive solutions involving a number of technical factors. The specific concern of IRRI is intensifying rice cropping systems through such measures as shorter season varieties, reducing turnaround time between crops, and fitting other crops, such as legumes and vegetables, into annual rotations where appropriate (IRRI, 1978). Partially because of similarities in the rice cropping systems in the South and Southeast Asian region and a narrow range of solutions, IRRI has been able to develop and use a crop simulation model to best fit cropping patterns with soil and climatic data. Cropping intensity is less a specific concern of CIMMYT, which uses a broad range of possible improved practices in designing solutions for specific situations for wheat, maize, barley and triticale (CIMMYT, 1976).

ISRA's and ICRISAT's designs of practices extend into developing a complete alternate farming system, involving several significant modifications of existing practices, or introduction of new practices/enterprises. For example, ISRA's improved systems have included such new elements as animal traction and soil conservation practices in addition to seed, fertilizer and pesticide (ISRA, 1977).

ICTA and CATIE represent intermediate approaches. Commodity research priorities influence the geographic focus of FSR work. FSR research concentrates on developing improved practices for the priority commodities, but other recommendations will be developed as dictated by the particular needs of the entire farming system, even though these recommendations may not involve the selected commodities. ICTA does not attempt to develop comprehensive solutions, but rather a few modifications at a time, focusing on the key constraints (Hildebrand, 1979c). One view is that farmers are not likely to adopt a whole range of recommendations simultaneously, but are inclined to make progressive modifications of existing practices.[1]

[1] See also the discussion in Section 5.2 about single trait and packages of practices.

There are a growing number of projects which incorporate "downstream" FSR type activities. They include the Caqueza project in Colombia, the activities of Purdue University in the Sahelian countries, the Michigan State University project in Upper Volta, the Central Luzon State University/Kansas State University project in the Philippines, and the Washington State project in Lesotho.[1]

The Institut d'Economie Rurale in Mali recently initiated a FSR program in the southern region of that country (Institut d'Economie Rurale, 1977).[2] A number of Asian countries, notably Malaysia, Indonesia, and the Philippines, have started or expanded FSR type programs, in some cases as a direct outgrowth of their participation in the Asian Cropping Systems Network. Detailed information on most of these projects is very limited to date.

The focus of current FSR programs on designing and testing technical innovations stems from FSR programs emerging from and being currently located in agricultural research institutions, with mandates restricted to crops and livestock. Some researchers have included technical aspects of processing, storage and marketing in their research mandate. Although the importance of agricultural policy has long been recognized, most agricultural research institutions have given scant attention to policy research. But the need to address policy issues is appreciated more now. The Economics Programs at both CIMMYT and ICRISAT are addressing policy issues in their research, and other institutions may incorporate policy issues in the future.

Few programs to date give explicit attention to the broader or macro implications of specific development strategies that may emerge from FSR programs. For example, a rapid adoption rate of an innovation may lead to a significant increase in production. How will such an increase affect prices in the short- and medium-terms? Are market facilities adequate to absorb the increase? What special measures

---

[1]The university projects are all supported by USAID.

[2]Another country which is currently reorganizing its research structure to incorporate "downstream" FSR activities is Zambia. An additional intriguing characteristic of the reorganization is their plan for such activities to institutionalize more firmly the crucial link between research and extension activities.

might be taken to guard against a short-term disruption of markets and prices? Some of these questions have been addressed in the course of certain national programs. The Central Luzon State University/Kansas State University Technical Package Thrust project in the Philippines is currently considering marketing specifically in the context of an FSR-type approach. Several agricultural development projects have included marketing and macro policy issues in the planning stages, but examples of such research are scarce.[1]

[1]A qualified exception is the Caqueza project in Colombia (see Appendix A3.3).

4. GENERAL METHODOLOGICAL AND IMPLEMENTATION ISSUES OF FSR

As illustrated in the discussion of "upstream" and "downstream" programs in the previous section, a broad range of activities is currently undertaken in the name of FSR. This variety of activities stems in part from the holistic nature of FSR which involves a concept of the "total" environment. Thus there is little activity concerned with agricultural and rural development which cannot claim some relationship with FSR, however tenuous.

Further, the breadth of activities included in FSR underlies both the growing consensus about its desirability as well as the considerable diversity of opinion about how it should be organized and undertaken. The diverse opinions involve practical issues of methodology, implementation considerations, and resources available for research, which individually or collectively may require some modification of the concept of the "total" environment. Instead of assuming that all factors determining the actual farming system can be potential variables, operationalization of FSR may favor treating some or most factors as parameters (Winkelmann and Moscardi, 1979).[1] For example, the mandate of a particular institution and the availability of research resources may necessitate focus on a narrow range of variables such as agronomic practices for one or two commodities.

In the following sections we examine a range of issues affecting the focus and content of FSR programs, including mandates of institutions, linkages among research and implementation agencies, professional and practical credibility, efficiency and accountability of the research process, selection of constraints and evaluation criteria. These

---

[1] Zandstra (1979b) has expressed an analogous approach with respect to cropping systems work in which plant growth and crop yield (Y) can be considered to be the result of two multidimensional vectors: the environment (E) and management (M).

$$Y = f\ (M, E)$$

In this relationship E are environmental factors (parameters) that affect Y but are not subject to modification by M (variables). It is in essence a default relation and reflects the researcher's decision concerning the mix of M to E.

issues have their roots in two basic characteristics of "downstream" FSR. First, FSR focuses on solving problems of small farmers--that is, it is development oriented (Navarro, 1979) and, second, it focuses on adapting and using existing improved technology--putting something together that can be used today--as opposed to science[1], which involves pushing back the frontiers of knowledge.[2]

4.1 MANDATES OF INSTITUTIONS

The mandates of the institution in which the FSR program is located are obviously important in determining the scope of the FSR program. For example, the mandate of IRRI requires a focus on rice cropping systems. The methodological approaches chosen in such instances will be sub-system specific to some extent. However, the research mandate of a particular institution being somewhat narrowly focused does not mean that a farming systems perspective cannot or should not be used. An example of a broad mandate is ISRA's work on the integration of crops and livestock in Senegal. Also ICIA's research on the crop sub-system in Guatemala has been broadened to include pigs. To examine how a particular crop or specific improved practices for that crop can fit into actual farming systems is an example of a more restricted approach. An example of this would be the corn and wheat work undertaken by the Economics Program at CIMMYT in Mexico (Byerlee et al., 1979).

Since most FSR is underway in crop research institutes, it follows that FSR methodology is most advanced for the crop sub-system. FSR programs involving the livestock sub-system have received relatively little attention and off-farm production sub-systems have been ignored. Most FSR programs are located in agricultural research organizations that are committed to increasing production by developing improved technologies. Unless linkages are well established with development

[1]Science as defined here is more characteristic of the traditional type of research and "upstream" FSR programs, both of which are involved in creating the body of knowledge.

[2]McDermott (personal communication).

agencies (see below), or the FSR project is located in a development project[1] or planning units or in "neutral" territory such as a university,[2] it is unlikely that nontechnical issues--such as policy and institutional questions--will be satisfactorily addressed.

4.2 LINKAGES

Because of the potential scope of FSR and the interdependencies among the various stages of FSR (Figure 2), linkages become highly significant in determining the success of the FSR approach. Although this is a critical implementation issue, it also has important connotations for methodology.[3] The methodology used will be influenced by the linkages the FSR program has with other research projects, both in and outside the institution where it is located; commodity improvement programs; policy making and rural development planning agencies; and farmer contact agencies that include development projects. For example, methodologies used should help articulate research priorities for other research (Byerlee et al., 1979) and "upstream" FSR programs. Strong links with other institutions can in essence widen the scope of the FSR program and, as a result, make it possible to consider improvements which may officially be outside the mandate of the institute or project responsible for a FSR program. For example, in the Caqueza project in Colombia the FSR group worked with credit institutions serving the project in designing schemes to deal with farmer risk aversion (Zandstra, Swanberg et al., 1979). However, linkages can increase the methodological

---

[1] One of the few examples, as mentioned earlier, of such a program is the ICA involvement in the Caqueza project in Colombia (see Appendix A3.3).

[2] An example, also mentioned earlier, is the Central Luzon State University/Kansas State University project in the Philippines, which is looking at the whole food system: production, marketing and processing.

[3] Section 6.1. includes discussion of linkages from an implementation perspective.

complexity of "downstream" FSR, since they tend to increase the ratio of variables to parameters in the research program.

Linkages with extension services, delivery system agencies (e.g., credit, fertilizer, etc.) and, where they exist, the management of development projects, can be very important in determining both the effectiveness of existing support systems -- external institutions in Figure 2--and anticipated changes in the future.[1] Incorporating in the methodology a capacity to evaluate the support systems can be important as an input in designing and testing potentially relevant improved practices. Evaluation also is important, where linkages with policy making agencies exist, in developing more appropriate developmental strategies. In most countries micro-level information for policy analysis is scarce. Therefore detailed information generated through the FSR approach could be important for identifying changes in policies that would complement the introduction of improved practices.

4.3 CREDIBILITY

Since the FSR approach in the developing world has gathered momentum only during the 1970s, credibility problems remain in both professional and practical senses.

Unlike the results of the Green Revolution, the results of FSR are likely to be less spectacular because of the step-by-step modification rather than a transformation of the farming systems.[2] As a result the credibility FSR achieves is likely to be heavily influenced by how efficiently research funds are used (see next section). Also, the practical nature of FSR may reduce peer respect and make it more difficult

---

[1] An interesting example of this in ICRISAT has been provided by Ryan (personal communication). Researchers at ICRISAT have involved bankers in the testing stage of their FSR program with a view to obtaining their assessments of the feasibility of the soil and water management technology and, in particular, the prospects for loans to finance items such as the tropiculteur. As a result, it is now an approved item for credit in the Indian banking system.

[2] In aggregate the benefits of FSR may be significant due to large numbers of farming families adopting the changes.

to recruit scientists to pursue FSR (Navarro, 1979). Finally the interdisciplinary nature of FSR work causes problems related to the kind of results considered "publishable". Often, "good" agronomic research is that which produces a low coefficient of variation. An agronomist setting up a program of field trials would, therefore, tend to favor fewer trials and more replications per trial. An economist, on the other hand, to achieve results representative over a wider area, would tend to favor more trials and few replications--given limited research resources.[1]

4.4 EFFICIENCY OF THE RESEARCH PROCESS

Collinson (1979a) has contended that the major problem facing FSR is funds and manpower too limited to deal with a large number of farmers.[2] Because of the specificity of FSR, with respect to both location and stage of development of farmers (Harwood, 1979b), each FSR effort deals with limited numbers of farmers and, therefore, appears to be relatively expensive. Further, there is often a time lag between the recognition of a problem, the finding of a relevant solution, and its adoption by farmers, particularly where there is not an array of readily available solutions which can be drawn from the "body of knowledge" (Figure 2).

FSR is often perceived as being very expensive by researchers not engaged in FSR and by funding agencies, in part because there are strong vested interests in maintaining the status quo of present research programs. Thus, unless payoffs from reorganization are perceived as being high, it would be difficult to shift resources to FSR. Sunk costs and low returns from past research endeavors are likely to be heavily discounted or even ignored.

---

[1] E. Crawford (personal communication) citing Barker.

[2] For example, Ryan and Binswanger (1979) have calculated that in the Semi-Arid Tropics research expenditures--presumably per year--amount to only 0.008 cents per hectare of geographic area and only 0.14 cents per hectare of the five ICRISAT crops--sorghum, pearl millet, pigeon pea, chickpea, and groundnut.

It would seem that the most logical way to compare the relative merits of FSR programs and research programs of a more conventional nature is to look at the costs in relation to returns. This is, of course, an empirical question. Although we hypothesize that "downstream" FSR will have a higher benefit/cost ratio in helping small farmers than commodity and disciplinary research approaches, we are not sure of the relevancy of the question. For reasons discussed earlier we believe the two approaches are more complementary than competitive (see Section 2.4.8).

In estimating the returns from FSR the obvious criterion is measurement of the improvement in the welfare of farming families. Measuring rural welfare, however, is very difficult. For example, "downstream" FSR may directly or indirectly increase the welfare of farming families--indirectly by reorienting research priorities of other research programs so they later contribute to increasing farmers' welfare.[1] Unfortunately, the potential of such feedback is often ignored in evaluating "downstream" FSR contributions, possibly because it is difficult, if not impossible, to quantify.

In spite of considerable potential benefits, efforts to reduce the time and costs of producing FSR results are necessary if this approach is ever to be applied to a significant portion of the farm population in the LDC's.[2] Three important principles are emerging in designing cost and time efficient methodologies. They are:

(1) Reducing of time required to move through the four research stages. The methodologies applied, in addition to ensuring a fast turnaround, need to be practical, replicable and inexpensive (Byerlee et al., 1979). Complex procedures that require highly qualified individuals to collect and analyze data and to design and test solutions, need to be avoided as

---

[1]An alternative way of viewing the welfare discussion would be immediate (direct) or future (indirect) changes.

[2]This is particularly important since, as others have pointed out (Menz and Knipscheer, 1979), "downstream" FSR raises the opportunity cost of neglecting farmers not in the specific target groups. Lowering explicit costs for specific target groups would enable work to be undertaken with more target groups.

much as possible (Zandstra, 1979a).[1] There are, however, limits to reducing the length of time required to obtain results.

(2) Maximizing the return from such research by making results more widely applicable. The extent to which improved systems can be transferred or extrapolated to other areas directly affects efficiency.

(3) Using "second best" or "best of readily available solutions". Traditionally research in agriculture has emphasized the concept of developing optimal practices. When one considers the heterogeneity existing in the "total" environment, however, costs in terms of finance and time to obtain optimal recommendations for each type of variation would be astronomical. Therefore, increasingly the emphasis of FSR is on developing improved farming systems that are better but not necessarily best, for each environment. In other words, the process is "non-perfectabilitarian" and does not envision developing optimal improved practices (Winkelmann and Moscardi, 1979).

4.5 WHOSE CONSTRAINTS SHOULD AN FSR PROGRAM CONCENTRATE ON?

The key to developing relevant strategies for improving the welfare of farming families involves first obtaining information on the farming systems practiced in terms of what is done and why it is done that way. That information can help indicate the flexibility--for example, when there are slack resources--and constraints that exist in the current systems. Needs or constraints can be identified at three levels:

(1) Those specifically mentioned by farming families.

(2) Those identified in a scientific manner by FSR workers.

(3) Those reflecting the interests of society as a whole.

---

[1] This is true both for cost efficiency and replication. Skilled personnel are characteristically in short supply in most LDC agricultural research organizations.

Those specified by farming families themselves may be only what they think can be solved with outside help (Nair, 1961).[1] Also, if they are living near the survival level they may have a short-term horizon and their expressed needs may conflict with the interests of society as a whole. If conflicts exist between the two sets of needs, in a society where voluntary change on the part of farming families is permitted, societal needs are not likely to be met.[2]

The constraints or needs identified by FSR workers are, by the nature of FSR, likely to reflect needs of the farming families themselves. But because of their position, the researchers are more likely to consider the potential societal impact of fulfilling farmers' needs. Maximizing yields per hectare to satisfy short run private interests at a long run cost to society by an irreversible drop in soil productivity, for example, would hopefully be recognized by FSR researchers. Their skill lies in devising strategies that meet the expressed needs of farming families without exacerbating constraints of direct relevance to such families but not explicitly mentioned by them. Also they need to be sure their improved strategies do not violate the interests of society as a whole. Unfortunately, this is easier said than done. Because the model of FSR articulated to date has been based on the individual farming family, the link to societal needs has not been well established[3]--either conceptually or operationally. The

---

[1] In a survey in Kenya, Sharer (personal communication) found farmers tended to ask for those items such as schools, clinics and roads which they thought government might be able to supply rather than priority items based on their overall appraisal of needs.

[2] Nair's (1979) recent work is a good example of the need to adjust government policies to bring about a convergence of private and societal needs.

[3] That, perhaps, is inevitable as most FSR work has been undertaken in technical research institutes by technical and social scientists. The latter, either because they feel they have neither the mandate to do macro research nor the influence to change policy and the external institutional environment, have focused almost exclusively on the micro issue of understanding and changing farming systems within the present environment (Byerlee, personal communication). Interestingly, some technical scientists are now urging the social scientists to change the policy environment so that they have less constraints in their own work.

mandates of the institutions with FSR programs and the linkages with government and developmental agencies, will influence how much attention is likely to be placed on the link between private and societal interests and whether potential conflicts may be resolved easily. We believe that these micro-macro linkages will be of critical importance in determining the long-term viability of FSR programs. Possible broad societal concerns, which are handled by the commodity programs and "upstream" FSR programs of research institutes in the case of technical matters, and planning and policy making bodies in the case of nontechnical matters, might be taken into consideration by having these agencies pre-screen potential improvement strategies for compatibility with societal concerns.

The needs or constraints that arise from an investigation of individual farming families may be technical, economic, or socio-cultural. Several approaches are used in dealing with such constraints.

The first involves accepting the constraint and developing strategies that exploit any flexibility in the current farming system without further exacerbating the constraint. We think little can be or should be done to change socio-cultural constraints unless they are debilitating society--for example, deepening societal inequities. Ways need to be devised to help improve the welfare of such groups of people in a manner compatible with the constraints. For example, no one should try to introduce hogs into Muslim areas.

The second approach to dealing with the constraints is to develop improved strategies that will overcome the constraints, as is commonly the focus of "upstream" FSR. For example, the FSR program at ICRISAT is attempting to alleviate the water constraint through the development of improved systems of soil and water management centering on watershed units (Appendix A1.2). The removal or significant alleviation of constraints has to be viewed from more than simply the perspective of the individual farming family. In India, for example, breaking of a labor bottleneck period through mechanization and herbicides could have serious consequences for society by decreasing employment opportunities of the landless, laboring class.

The decision on which approach to use in dealing with constraints

will depend on their severity, the flexibility that exists in the existing farming system, and the availability of potential improved strategies that break the constraints or exploit the flexibility.

4.6 CRITERIA FOR EVALUATING IMPROVED SYSTEMS

It is important to evaluate the improved systems from both the individual farming family's and society's point of view. The simplest way to evaluate whether improved systems are suitable or relevant from an individual or private perspective is to ascertain whether they are adopted by farming households. Suitability can be assessed in an ex post sense through various methods of acceptance such as adoption indices. However, evaluating suitability that way creates two major problems:

(1) To improve the efficiency of the FSR approach it is essential to use evaluation criteria that assess the potential suitability of the innovation both for individual farmers and the society as a whole.

(2) Additionally, the adoption indices give no indication as to why some farmers did not adopt the improved system.

Both problems have important implications for developing suitable methodologies.

In assessing whether the improved practices are potentially suitable from the point of view of the individual farmer or farming household, we suggest dividing the evaluation criteria into three groups corresponding to the technical element, the exogenous factor, and endogenous factor. The first two constitute necessary conditions for the adoption of improved practices--in other words, whether the farmer can adopt it, if he is willing to.[1] The endogenous factors, on the other

---

[1]Although we broke the evaluation criteria into distinct groups, we recognize that they are not mutually exclusive. For example, willingness to adopt a particular technology will be partially determined by ability to do so. Also the profit--level and dependability--of an improved system, which we consider a sufficient condition, will be partially determined by the external institutions--such as prices for the inputs and market for the product produced--which constitute part of the necessary conditions.

hand, can be considered as providing the sufficient condition for adoption; that is, they determine whether the farmer is willing to adopt it.

The necessary conditions for adoption of improved technology can be specified by three evaluation criteria: technical feasibility, societal acceptability, and compatability with external institutions or support systems. The relative significance of the last two criteria depend on the stage of development of agriculture in the area, and the type of improved practices considered. Increasing contacts outside the village and increased commercialization of agriculture--resulting in increasing significance of economic forces--likely make social acceptability in the community relatively less significant, while an appropriate support system becomes increasingly critical. The distribution system must be able to provide the inputs required for adoption of the improved technology, and a market for the product produced must be available.[1]

Obviously, the improved practices must be compatible with the goal or goals of the potential adopter. The objective function of farming families likely will change as they move from self-sufficient subsistence farming to commercial farming. In the case of the former, understanding the goal(s) may be a particularly complex task while in the latter they are probably much easier to articulate--for example, as profit maximization. Most farming families, on the continuum between the two extremes, are likely to have a hierarchical ranking of goals. A commonly suggested ranking is food self-sufficiency first, then profit maximization after food needs are met.[2] The latter goal is easier to examine by assessing profitability expressed in terms of the most

---

[1]This is a critical issue in many situations and requires analysis at the macro level. For example, Vincent (personal communication) emphasized that in one area of the Philippines an attempt was made to help cabbage producers obtain higher prices for their product by controlling the production of cabbage over time. While this was taking place, farmers in another cabbage producing area took up the slack by expanding production. This is a good example of the desirability of an FSR program embracing not only production but also processing and marketing considerations.

[2]One could argue that the participation of the farmer in the research process will to some extent compensate for a complete and detailed understanding of his/her family goals.

limiting factor of the improved practices compared with the those they are designed to replace.[1] Because of the relatively low living levels and the desire for food self-sufficiency, avoiding risk by ensuring dependability of return from an innovation should be an important evaluation criterion (Norman and Palmer-Jones, 1977). For example, if the improved practices can be proved to be more profitable and as dependable as those they replace, they are likely to be attractive to farming families.

Until now we have concentrated on evaluating the improved systems from the perspective of individual farming families. However, as emphasized in the preceding section, attention also needs to be given to its acceptability from a societal point of view.[2] For example, if food production were to decline, or if the technology adopted were to result in degrading the natural resources base, or if increased inequality of income distribution were to arise, then short run private returns would come at a long run cost to society. If at all possible, divergence between private and societal interests needs to be avoided. Unfortunately, looking at the improved systems from a societal point of view requires looking into the future--sometimes farther than the short run, so uncertainty complicates the evaluation problems (Flinn, 1980). The micro-macro linkages stressed earlier are very important but they remain the weakest part of FSR programs. Because current FSR programs concentrate on individual farming families, it is very difficult operationally or even conceptually to link evaluation from the societal point of view to evaluations for individual farming families.[3] Such linkage might take the form of the pre-screening of potential improvement strategies by research institutes and planning agencies as

---

[1]Profitability as a concept can be applied to production destined not only for the market but also for home consumption. In the latter case, the product price is what it would be necessary to pay to purchase the product.

[2]We use societal as inferring some degree of aggregation of farming families. For example, in the current discussion it could mean the community in which the farming families are located or the nation as a whole.

[3]Michie (personal communication)

suggested earlier (Section 4.5).

Currently, societal evaluations tend to be based on separate studies that use aggregate measures and are often ex-post rather than ex-ante. The micro-macro linkages need much more attention by researchers.

5. METHODOLOGY OF FARMING SYSTEMS RESEARCH

In this chapter we examine methodological issues involved at each stage of the process: descriptive and diagnostic, design, testing, and extension, with emphasis on "downstream" FSR. The way specific methodological issues are resolved will depend on how the general issues outlined in the preceding chapter are resolved. Since this chapter focuses on current FSR in the Third World, most of the examples are drawn from research on the cropping sub-system.

5.1 DESCRIPTIVE AND DIAGNOSTIC STAGE

The objective of this stage is to pick target areas, describe the present farming systems, ascertain major constraints on farming in the area and discover the degree of flexibility in modifying the farming systems.

5.1.1 Selection of the target area

The following three points need to be considered in selecting the target area:

(1) A FSR program should not be implemented if it is incompatible with government needs and priorities (Asian Cropping Systems Working Group, 1979). Still, accepting government priorities might lead to problems. For example, if development priorities are designed to help the more commercialized areas, these areas may not require FSR.

(2) The problem of obtaining credibility in reasonable time, especially when research resources are scarce, means a bias towards selecting an area not only consistent with national development priorities but also one where tangible results are potentially possible in a short time (Navarro, 1979).[1]

---

[1] For example, the Asian Cropping Systems Network picks areas designated as receiving priority in national development plans and that have both potential for increased production and cropping intensity and an adequate infrastructure support system (Zandstra, 1979b).

(3) The broader the target area the greater is the potential to spread costs. Concentrating on small, unrepresentative areas is likely to reduce the potential multiplier effect of FSR.

The criteria for delineating boundaries of the target area also may be affected by political issues. The target area, for example, may be demarcated by an administrative or political boundary and may embrace a wide variety of farming systems. Boundaries delineated by development projects may be useful in some circumstances as a compromise because they have reasonably uniform farming systems.[1]

In practice the procedure that often gives satisfactory results is delineating an area where the majority of farmers follow similar agricultural practices or a similar farming system (Hildebrand, 1979c).

Sometimes, however, in assessing the physical potential for particular enterprises--crops or livestock, for example--it is important to delineate the target area on the basis of the characteristics of the technical element or agro-climatologic features (Zandstra, 1979b).

5.1.2 Baseline data analysis

Baseline data analysis involves using available information. In view of the time and cost of collecting primary data, available secondary information should be exploited. Secondary data can be useful in delineating the target area and in obtaining a preliminary understanding of existing farming systems.

The criteria for data to be used in baseline data analysis and in the collection of data from on-farm studies should be the relevance of the data in understanding existing farming systems, particularly their constraints and flexibility and how to modify present systems (Technical Advisory Committee, 1978). Good data on the technical element, particularly on such physical factors as land resource classification and weather and climatic characteristics, can be particularly

---

[1]Mali, for example, is divided into development areas, each with its own organization, delivery systems, etc., which emphasize different crops--groundnuts in one area, cotton in another, etc.

valuable.[1] It has been suggested that wherever possible, existing methods of analysis should be used to classify soil, land, and climate (Technical Advisory Committee, 1978).[2] Some information on various exogenous factors can often be gleaned from reviewing secondary data sources, but the common lack of detailed micro information usually means that basic data concerning the endogenous factors are not available. Therefore, as a rule, endogenous type data will be obtained through on-farm studies.

The quantity and quality of secondary data available will determine how well the objectives of the descriptive stage are achieved as a result of baseline data analysis. The poorer the data and informational base is, the more research at this stage becomes an art rather than a science, and the more on-farm studies are needed to describe and diagnose the area's characteristics and constraints.

5.1.3. On-farm studies

On-farm studies are important in disaggregating the target area's environmental heterogeneity. Such studies should classify farming families into homogeneous sub-groups or "recommendation domains" (CIMMYT Economics Program, 1980). The sub-groups provide a focus for developing relevant strategies to improve their welfare. Effectively delineating such sub-groups depends on being able to isolate the factors influencing variation between groups of farmers and adopting a classification method that effectively weights the influence of the factors. CIMMYT (1979) has suggested two types of divisions: "a locational division by area and a hierarchical division between farmers in the

---

[1] The international and regional agricultural research institutions, with their resources and ecological focus, are in a good position to set up data banks on such information. A number are now doing this because such information has uses far beyond the specific needs of "downstream" FSR.

[2] In recent years, however, IRRI has increasingly emphasized more efficient ways of interpreting land and climate as they relate to production alternatives (Zandstra, Angus, and Tamisin, 1979; Angus and Zandstra, 1979).

same area." Three sets of factors are identified as contributing to the divisions:

(1) Natural factors: climate, soil, topography.

(2) Historical factors: food preferences, social customs, present technology, and tenurial arrangements.

(3) Institutional and economic factors: access to markets and to inputs.

While sets (2) and (3) are relevant to both locational and hierarchical divisions, set (1) is relevant only to locational divisions. Dividing farmers into homogeneous sub-groups is a complex process and includes consideration not only of differences in the technical element but also of variations in the human element--which traditionally have often been ignored.[1] As a result of this classification, farming families in a particular sub-group will tend to have similar farming activities and include similar social customs, similar access to support systems, comparable marketing opportunities, and similar technology and resource endowment (Collinson, 1979a). Farming families within each specific sub-group should have the same problems and development alternatives and should react in the same way to policy changes.[2]

Two major methods are generally used to obtain the necessary data from on-farm studies to finish classifying farming families into homogeneous sub-groups: reconnaissance (Hildebrand, 1979a) or exploratory surveys (Collinson, 1979b), and formal surveys (Collinson, 1979a).[3]

The reconnaissance or exploratory surveys are informal and consist of field tours or sondeo (Hildebrand, 1979a). Multidisciplinary teams

---

[1]Economic and institutional factors heavily influence what will be grown. Because they are perishable, vegetables will be grown near urban markets even though technical factors in more remote areas may be more suitable for growing them.

[2]However, such divisions between the different sub-groups are artificial, since interdependencies and interactions are likely to exist between them. In evaluating the ex ante societal consequences of improved strategies, it is important to understand such relationships.

[3]These two types of surveys are complementary rather than competitive. The former should nearly always precede the latter.

working in an interdisciplinary framework travel throughout the target area talking with representatives of policy-making, farmer-contact agencies and with community leaders and farm families. Such discussions are to delineate sub-groups of farming families and to analyze current farming systems and possible types of developmental strategies potentially useful to farming families and consistent with their goals. The exploratory surveys require interaction not only with people in the target area but also among members of the FSR team (Collinson, 1979a; Hildebrand, 1979a). Many FSR practitioners believe the process leads to a partial but useful impression of the entire farming system and helps classify farming families into sub-groups. The extent to which these reconnaissance surveys can be carried out--6 to 10 days in the case of the sondeo (Hildebrand, 1979a)--is largely a function of the experience of the team in FSR and their familiarity with the target area. Then more formal structured farm surveys often are carried out among the target population to verify the tentative insights from the exploratory survey. The surveys involve trade-offs between cost and time efficiency on one hand and accuracy on the other. For those concerned about efficiency, the formal survey consists of a single interview with a representative sample of farmers.[1] Emphasis on accuracy, in contrast, calls for frequent interviews over a long time--usually one year, particularly for data that are continuous and non-registered such as labor flows, in contrast to those that are single-point, registered in nature such as purchase of fertilizer (Collinson, 1972; Lipton and Moore, 1972; Norman, 1977).

Single visit interviews of a large number of farmers are increasingly being undertaken to minimize sampling errors. Such surveys can be complemented by more frequent interviewing of a limited number of farmers in order to minimize measurement errors. The frequent interviewing approach (Hart, 1979b) is usually carried on concurrently with later stages of the FSR program. Particular emphasis is usually placed on including farming families who participate in the testing stage of FSR. A combination of single interviews and frequent

[1]CIMMYT calls the single-visit, formal survey a verification survey.

interviews has these advantages:

(1) It minimizes the delay in moving from the descriptive to the design and testing stages, although some gamble is involved in the sense that the needs or constraints emerging from the in-depth study may not confirm the results from the earlier single-interview survey that were fed into the design and testing stages.

(2) It provides accurate quantitative information for comparing results of the existing system with results of the improved system, which is particularly useful during the testing stage. Sometimes, in compromise, information is collected on only the part of the farming system of direct interest to the research mandate of the institution undertaking the FSR program (Hildebrand, 1979b).[1]

Four basic methodological issues are involved in speed and efficiency of carrying out the formal survey:

(1) Various sampling methods are available for selecting farming families for study. The time involved and method used will depend on whether or not a stratification procedure is to be adopted and whether frames of farming families to draw samples from are available (Bernsten, 1979; CIMMYT Economics Program, 1980).

(2) Criteria for collecting data often are poor.[2] Too often the criterion for the way in which data are collected is the ease with which it can be collected accurately, rather than the need for it to be collected accurately (Collinson, 1972). The decision on how data should be collected should be based

[1]Further efficiency in terms of cost is sometimes possible with farming families keeping such records themselves (Hatch, 1980). Literacy has permitted that in Guatemala (ICTA), Philippines (IRRI), India (ICRISAT), and elsewhere.

[2]Modeling through the use of simulation techniques has also sometimes been used to obtain an idea of the critical variables and hence an indication of variables that need to be measured accurately. For example, Brockington (personal communication) has used such techniques in looking at the dynamics of cattle-herd structures in Brazil.

on lowest cost commensurate with the understanding that is necessary. Direct measurement techniques--like quantifying actual seasonal labor flows--require expensive techniques such as frequent interviewing over long periods. Collinson[1] suggests that the decision as to whether measurement is necessary should be based on such considerations as whether it improves understanding sufficiently and consistently, whether it improves understanding enough to justify the extra cost of measurement, and whether it improves understanding enough in the light of opportunity costs forgone, such as working with more sub-groups of farming families.[2]

(3) Related to the above and to efficiency is the idea that too much emphasis may be placed on quantifying and too little on qualitative data. Qualitative information should include not only attitudinal information but also types of data not essential according to the criteria specified above. Limiting quantification to key characteristics reduces costs involved in collecting data.

(4) Too often little consideration is given to increasing the efficiency of the data collection-analysis link in surveys. For frequent-interviewing surveys, processing should start while data are still being collected.[3] Also, all surveys, no matter how they are undertaken, need to be designed to facilitate quick processing--such as ease of transferring data to computer-based systems.

[1]Collinson (personal communication).

[2]The same considerations apply to modeling techniques which are based on accurate measurement. However, simulation techniques may be useful under certain circumstances (E. Crawford, 1980).

[3]The recent technological breakthroughs with pocket calculators and mini-computers have increased the ease with which this can be done. Purdue University is, for example, using mini-computers in the Sahelian countries, and Michigan State University is using them in northern Cameroun.

5.2 DESIGN STAGE

Priorities for research should arise from the descriptive stage, in terms of developing improved practices based on the needs of farming families and constraints they face. The design stage should produce a few sets of improved practices for testing at the farm level. Collinson (1979a) suggests the following procedure for designing improved practices:

(1) The experimental variables should consist of practices in which farmers' management is flexible and those where ex ante evaluation suggests room for increased productivity.[1] Flexibility in management is enhanced when there are underutilized resources, while increasing productivity of variables is particularly important for those resources that are most limiting.

(2) The feasible range of treatments for such variables is set by the flexibility that exists. Some flexibility could be introduced, for example, by assuming the institutional support system could change--that is, be a variable rather than a parameter. It could, for example, be assumed that an institutional source of credit could be made available to supplement the cash flow of the farm business. The above remarks suggest that the development of improved practices should usually consider the existing or definitely expected infrastructural support system. However, that is now being debated in some centers.[2]

(3) The parameters in the experimental process should be those not potentially subject to manipulation and as representative

---

[1] Such practices can be ascertained from investigating what is available in the "body of knowledge" established as a result of commodity research and "upstream" FSR programs.

[2] Currently at CIMMYT considerable debate centers on how much they should develop improved technologies given the existing infrastructure support system and how much they should be trying to change that system as well (Byerlee, personal communication).

as possible of practical farming conditions.[1]

The design stage is primarily implemented under station conditions.[2] Experimentation, according to the above specifications, is essentially "downstream" FSR. Where the "body of knowledge" is not sufficiently developed to provide adequate material for the design stage of the "downstream" FSR program, relaxing the above experimental constraints may be justified so an "upstream" FSR program may be initiated. To date much knowledge has been accumulated through the reductionist approach, usually without a systems focus. When interaction is likely to be important--for example, in watershed management, soil fertility, and mixed cropping, the above specifications may be relaxed to build up the "body of knowledge" through an "upstream" FSR program.

Unlike the other stages of FSR, research methods for work on experiment stations are somewhat better established (Technical Advisory Committee, 1978). Usually conventional approaches can be used. However, complications are introduced when the research has more of a systems focus and the ratio of variables to parameters is increased--as is true in some "upstream" FSR programs.

In the design stage of "downstream" FSR programs the following two issues have important methodological connotations:

(1) The ever-present problem of minimizing costs of research has two dimensions at the design stage.

(a) Computer modeling and simulation can have definite advantages in meeting time limits, as with livestock where relatively long cycles are the rule and where topics such as rainfall/water balance/crop growth simulation models help identify alternatives.[3] However,

---

[1]This may, as stressed earlier, also be determined in part by the research mandate of the institution with the FSR program and the feasibility of dealing with many variables.

[2]Hildebrand (personal communication) suggests that one should be cautious about drawing a fine line between design and testing. In fact, some design work can, and does, take place in trials at the farm level.

[3]ILCA, for example, uses this approach in their research on livestock, while ICRISAT applied it to their watershed management work.

complicated and nonstandardized modeling needs to be undertaken cautiously with a full understanding of its potential dangers (Technical Advisory Committee, 1978). Too often such analytical tools have been used as a substitute for, rather than a complement to, work of a more plebian nature. As a result they have often become overly complex, expensive, and out of touch with reality.[1]

(b) Since ceteris paribus conditions are much greater on the experimental station and the human element cannot adequately be taken into account except as an input in the initial experimental design, practitioners in "downstream" FSR have reservations about spending much research effort working on the experiment station.[2] Generally, the greater the "body of knowledge", the shorter is the time required on the experiment station to complete the design stage in "downstream" FSR.

(2) Developing improved practices may involve incremental or "single trait" changes instead of packages of practices. Numerous studies have shown that where packages are introduced, various components are adopted to various degrees (Gerhart, 1975; Hildebrand, 1979c). The major advantages of packages, of course, include the complementary or synergistic effects or relationships among components. For example, improved seeds respond better than indigenous varieties to inorganic fertilizer. The major disadvantage of such packages involve complications due to the more complex methodologies needed to put them together and problems or difficulties in getting them adopted by farmers. It is likely to be more difficult, for example, to convince farmers to adopt an

---

[1] In addition to the institutions mentioned in the preceding footnote, some encouraging developments in simulation modeling are evolving from work in the UK (Spedding and Brockington, 1976; Brockington, 1979).

[2] For example, ICTA's work on time devoted to research work off and on the experiment station is a ratio of nine to one (Hildebrand, 1979c).

improved package when few changes as a result of external factors have been introduced into their farming systems. Also, packages often imply more complex management and more complex external institutional support systems. Assuming ceteris paribus conditions, single trait changes are obviously preferable (Bartlett and Ikeorgu, 1979). However, in theory at least, where single changes come at too high a cost--private or social--as a result of ignoring synergistic effects, then packages of improved practices should be developed. Accordingly, it could be argued that improved packages of practices are likely to be the rule rather than the exception (Ryan and Subrahmanyam, 1975). But in practice it can, and perhaps should, be argued that because the farmer is unlikely to adopt the package in its entirety, using an incremental approach is justified. In other words, initial extension work might emphasize one or two components with the rest to be added later. The criterion for such an approach is that the changes being introduced should be as many and as big as possible so long as the farmer finds them acceptable.[1] Instead the current emphasis on packages has tended to result in offering, at the design stage, only two possibilities--rejection or complete acceptance of the whole package. Later the farmer decides which parts of the package to adopt if initially he can't accept the entire package. Byerlee[2] believes that research via the extension staff can provide such information more efficiently than the usual approach described above, in which a lot of valuable information is withheld from farmers who discover it the hard way later.

[1]Collinson (personal communication).

[2]Personal communication.

5.3 TESTING STAGE

The objective of this stage is to evaluate the improved practices flowing from the design stage to the farm. The evaluation criteria should be the same as those found to be important in the descriptive stage. The testing stage consists of two parts:

(1) Trials at the farmer's level that use farmer's land and maybe labor, but with the managerial input still provided by the research workers.

(2) Farmer testing with farm families providing their own land, labor, capital,[1] and management. In essence the improved technology is tested for compatibility with the technical, exogenous, and endogenous factors.

Usually performance of the improved technology drops when it moves from the somewhat artificial conditions of the experiment station to trials at the farm level,[2] and drops again at the farmer's testing level where the improved technology is in effect being tested for compatibility with the current farming system and the managerial know-how of the farmer.[3]

Two critical issues, both with important methodological connotations, arise at the testing level:

(1) The issues of interaction between farmers and research workers,[4] and the representativeness of farmers and farming

[1]The amount of capital anticipated here is that already available plus what could be derived currently or in the near future through external institutions. Realization of the latter may require credit or other inputs to be provided by the research organization in the testing stage.

[2]This corresponds to yield gap I as defined in the Rice Constraints Studies undertaken at IRRI (IRRI, 1977).

[3]This corresponds to yield gap II in the IRRI studies.

[4]This interaction involving participation of the farmers has important implications for the research process. The example given by Collinson (personal communication) cited in Section 2.4.3 indicates just what it means and how significant it can and should be.

families. Conflict between the two desirable characteristics is conceivable. Some research workers prefer to select the better,[1] more responsive or more cooperative farmers to participate in the testing stage. Using the cooperativeness criterion has the advantage of maximizing interactions between research workers and farmers. But there is the potential problem that even when improved practices receive a positive evaluation, they still may not be truly relevant for the average farmer.[2] The adoption process may be thus biased towards farmers with the above characteristics and cause inequalities in benefits in the long run. Other research workers in FSR advocate selecting a cross section of farmers representative of the subgroup or subgroups under investigation. The possible disadvantage, that representative farmers would not maximize interactions between farmers and research workers, is offset by the big advantage of getting a more satisfactory idea of whether the improved practices are likely to be suitable for the average farmer. However, the bias that usually--and perhaps inevitably--occurs is one of including only cooperative farmers at the testing stage to ensure maximizing interactions between farmers and researchers.

(2) The issue of transferability. Costs limit the number of sites that can be included in the testing stage. So efforts are needed to increase the multiplier effect by extrapolating results to other areas. Chances to extrapolate or transfer results to other areas are, of course, increased if sites for farm trials are picked to represent large areas. Possibilities for extrapolation are increased by developing

[1] Shaner (personal communication) has suggested that an advantage of selecting such farmers is that they are an intermediate step between the potential returns at the farm level and returns achieved by representative farmers.

[2] Cooperation can be encouraged through a reward system, but opinion is mixed regarding such forms of encouragement.

technologies that are flexible in timing and other factors.[1] At the farmers' testing level a detailed specification of the proposed improved practices and conditions under which they were tested is required to increase the efficiency of extrapolation to other areas (Zandstra, 1979a). Such specification should include (Norman and Palmer-Jones, 1977):

(a) Delineation of what was actually done in describing the proposed improved technology.

(b) Description of the technical environment where the testing was undertaken, including location, availability and distribution of water, temperature, potential evapotranspiration, and soil type (i.e., physical and chemical properties that are likely to affect tillage, nutrient and water characteristics, and erosion).[2]

(c) Economic specifications detailing output and input totals and flows where relevant in both quantitative and monetary terms. Also, ex ante evaluation criteria should include more than just criteria relevant to the specific test sites. Such specifications about improved practices permit one to assess the suitability of the improved technology to farming families adopting different goals, families with wide variations in resources, and those facing differences in the exogenous factors.

The ways the testing stage is conducted may vary widely. No attempt is made here to discuss the various approaches that are used, except in general terms.

---

[1]Some FSR practitioners suggest that such strategies for increasing the multiplier effect from extrapolation to other areas should not be pursued if it involves some sacrifice in refining the improved technology to the specific area under investigation.

[2]Obviously some of this information would be derived from the descriptive stage.

5.3.1 Trials at the farmers' level

Trials at the farmers' level, or research-managed trials as they are sometimes called, can cover more treatments than those at the farmers' testing stage. At the testing stage, treatments are usually less complex than those undertaken on experiment stations during the design stage because of costs, fields not being big enough to carry out complex experiments--especially if replications are involved, and the desirability of having some interaction between farmers and research workers. Interactions are less likely when experiments become too complex.

The aim of such trials is to screen the improved technologies arising from the design stage, to fine-tune them to the local situation, and to evaluate their potential both locally and for broader regional coverage. Researcher managed trials can consist of either replications within fields or between fields--to check site variability.[1] The varied types of farm level trials[2] can use experimental designs similar to designs on experiment stations.

5.3.2 Farmers' testing[3]

Farmers' testing is the most rigorous test of the proposed improved technologies. Three points need to be considered to derive valid, useful data for evaluating the improved practices at this stage:

---

[1] The pros and cons of each type of replication are discussed by Bandong *et al.* (1977).

[2] For example, CIMMYT advocates three classes of on-farm trials: yes-no trials, how-much trials, and verification trials (Winkelmann and Moscardi, 1979, and Appendix A1.1).

[3] Farmers' testing in the context used here includes the preproduction testing undertaken in the IRRI Cropping Systems Program (Asian Cropping Systems Working Group, 1979; Zandstra, 1979a).

(1) It is important that plots are large enough for the improved technologies being tested.[1] Labor is an important input, so plots need to be large enough that labor inputs can be accurately measured. Consequently, replications within the field are not usually possible.[2] However, the improved technology may be replicated on fields of other farmers.

(2) Both the technical and human environments vary widely over time. Testing for more than one year[3] gives a better idea of the level and stability of improved practices, particularly where there are substantial inter-annual variations in the "total" environment.[4] In effect, replications can be increased by incorporating the time dimension through using the same improved practices in different years. But such a replication should not preclude modifying the improved practices after obtaining results in earlier years.

(3) To provide valid evaluation of improved practices it is important to obtain data that will assess compatibility of the practices with other parts of the farming system. Two

---

[1] IRRI, for example, suggests 100 sq. m. as a minimum (Zandstra, 1979) while Hildebrand (personal communication) advocates that at least 20% of the cultivated area of the farmer's farm should be devoted to the test.

[2] In any case, farmers providing the evaluation are not likely to be interested in replications.

[3] Three years of on-farm testing are often advocated (Asian Cropping Systems Working Group, 1979; Hart, 1979a). E. Crawford (personal communication) has suggested that when a shorter evaluation period is necessary, and when manpower and computational resources are available, simulation offers a worthwhile method to assess the sensitivity of the improved technologies under different assumptions. That, however, raises the issue of accurate modeling mentioned earlier (see footnotes in Section 5.1.3). It will probably be easier to investigate realistic variations in the technical element than in the human element.

[4] Another approach that has sometimes been advocated but which has some obvious problems is testing in slightly different "total" environments the same year to simulate differences between years.

alternative approaches may be used.[1] One is to collect data on all other parts of the farming system to assess potential conflicts and compatibility. The alternative often adopted to minimize costs is collecting data on only the parts of the farming system that the improved practices are likely to directly affect or replace. But caution is needed if the flow and level of resources required to adopt the improved practices differ substantially from those required for the practices they are designed to replace.[2]

5.3.3 Intermediate types of trials

To encourage more farmer-research worker interaction and lower costs by combining some of the characteristics of farm level trials and farmer testing, two additional types of trials or experiments are sometimes used:

(1) Trials superimposed at the farmer testing level; that is, conducted on the same field where the farmer's testing is being undertaken--trials that reflect several factors relevant to the farmer's situation (Zandstra, 1979a). For example, IRRI's Cropping Systems Program specifies that superimposed trials must include four levels: a simulation of farmers' management with no purchased material inputs, the level of component technology assigned to the cropping pattern, and a level of component technology that will produce high yields in the cropping pattern, or will produce similar yields with substantially lower input.

(2) To encourage more of a systems focus, unit farms[3] have been used

---

[1]As discussed earlier (Section 5.1.3), these can be combined with the formal surveys.

[2]The example discussed earlier (Section 2.4.5) concerning improved practices for cotton in northern Nigeria illustrates the potential problems of such an approach.

[3]The use of unit-farms, of course, pre-dates the FSR approach (Jolly, 1952).

in the Farming Systems Program at IITA (Menz, 1979). They have also been used to more realistically include the human element with perhaps much more control than possible under farming conditions at the village level. Menz (1979) suggested that the degree of control imposed on the unit farmer will depend on whether the technologies being developed are still in the design stage, are trials at the farmer's level, or have more farmer-testing orientation. The inability to realistically incorporate the human element--both exogenous and endogenous factors--supports the notion that unit farms are more suitable in "upstream" FSR programs.

5.4 EXTENSION STAGE

The extension stage, because it provides vital information about the effectiveness of the improved strategies from the earlier stages of the FSR process, is an integral part of the FSR program. In addition, assessment at this stage also provides information on changes taking place and hence helps determine what new problems require FSR.[1]

5.4.1 Monitoring and evaluation

Monitoring and evaluating activities serve as a management tool to improve the effectiveness of on-going projects[2] and provide important input for the design of upcoming projects. Monitoring and evaluating check the validity of the description, design and testing activities of FSR so lessons from the project can be systematically incorporated into the design of future projects in that area or similar areas.

---

[1]Because of the iterative and dynamic nature of FSR it is difficult to divorce its descriptive and extension stages.

[2]Although we are specifically referring to projects, which usually contain monitoring and evaluation components, the same principles apply to more general extension programs that are not project specific.

Monitoring projects while they are in progress helps provide project managers with information they can use to improve the project. Monitoring activities involve systematically overseeing the process of change as a consequence of the project. Evaluation activities, on the other hand, are more concerned with the overall impact or results from a project.[1,2]

Monitoring and evaluating the introduction of improved strategies need to be looked at from the perspectives of research workers, farming families, and society as a whole. The research perspective is reflected in the degree to which the needs of the individual farming family and society are met.

(1) In monitoring it is important to determine the number of individual farming families that have adopted the improved technology, the degree to which they have adopted it, including the different components of a package, and the reasons for divergence from what was recommended. Some types of information necessitate acceptability-testing procedures. Acceptability or adoption indices like those suggested by Hildebrand (1979a) can be a valuable aid.

[1]Sometimes a distinction is made between on-going and ex post evaluation activities (Cernea and Tepping, 1977). On-going evaluation provides direct input to project management and focuses on affecting current project activities. Such evaluation cannot be readily distinguished from monitoring activities unless one conceives of monitoring as simply collecting information and evaluation as both collecting data and more than cursory analysis of certain problems. We use the term monitoring to include on-going evaluation, and confine evaluation to its ex post function.

[2]Vincent (personal communication) pointed out a major problem of most projects is that they are not designed to deal with learning from either farmers or policy makers. The execution of projects and their evaluation are usually tied to the initial objectives--often narrowly defined--which, given the time from project paper stage to implementation stage and the interim changes in the political environment and those from farmer participation in the project, do not allow for full utilization of learning in the feedback loop. Frequently, Vincent suggests, the feedback loop must be ignored because of time pressures and implementation schedules, which seriously reduces the potential effectiveness of the FSR program in many projects.

(2) Evaluating the impact of improved technology from the point of view of society involves answering such questions as the distribution of benefits from the adoption, stability of the ecological base, and the general nutritional level.

Although methodological problems hinder investigation of the above issues, information collected during monitoring and evaluation activities can be important in giving credibility to FSR and in feeding back into the FSR program problems that have arisen from incorrect or imprecise specification of the environment or evaluation criteria, or in giving research priorities for future FSR work.

5.4.2 Integrating FSR into projects

Increasingly projects also include an adaptive research component closely linked to monitoring and evaluation activities. Adaptive research can upgrade recommended practices being extended by the project and help anticipate and solve problems, particularly technical ones, which inevitably arise during the course of a project. Monitoring activities can serve as an early warning system, identifying problems when they first appear so they can be dealt with through adaptive research.[1] Adaptive research personnel on a project, in turn, need to have close links with research institutions where they can draw materials and expertise on short notice as required.

Monitoring, evaluation, and adaptive research activities in a project collectively provide an in-house capability of carrying out the full range of FSR-type activities. Ideally some of the same research personnel who would participate in the initial stages of the FSR before a formal project is initiated[2] should be available throughout

---

[1] A common example is the sudden emergence of a disease like rice blast in the variety being extended in a project area. Early detection and solution of such problems is critical to the continuing progress of the project.

[2] In the next chapter we strongly recommend that FSR be an integral part of the project planning phase. Too often planners assume that suitable improved technologies are already available for farmers in the proposed project areas.

the life of the project. These activities, collectively in effect, become the FSR component of the project. Analysis, design, and testing activities can improve the performance of extension activities and lay the basis for future extension efforts in the same area.

Monitoring, evaluation, and adaptive research activities of ongoing projects face some of the same methodological problems discussed in preceding sections. The problems are complicated by dealing with a dynamic situation that should be progressing as projected. Researchers must follow and understand current situations with a view to improving project performance, often through a series of measures designed and tested on very short notice. In addition, researchers, possibly the same group of researchers, are often asked to anticipate effects of changes and to identify future improvements that will maintain or build upon the current project through the next generation of projects. These activities obviously make significant demands for financial support and skilled personnel.

6. INSTITUTIONAL LINKAGES

Despite a growing consensus on both the desirability of FSR programs and the need for a division of labor in undertaking them, several issues often adversely affect their implementation. This chapter focuses on intra- and inter-institutional issues at the national level, including universities, research institutions, and agricultural development agencies. It also examines current and prospective roles of the regional/international centers and DCIs in supporting FSR activities at the national level.

FSR has been applied in relatively few areas of the Third World--with limited results. Clearly major inputs of resources in FSR programs will be required for any hope of significant impact on large numbers of small farmers. Given the holistic nature of FSR and the fact that much of the work is location specific, to provide even cursory coverage of major regions of the developing world will require significant resources. Such resources are unlikely to be available from existing national agricultural research programs, which tend to be poorly staffed and under-financed. The need for location specific research and the ability to command resources are key considerations in determining an appropriate division of labor among various research institutions.[1]

Clearly national programs, including research institutes and universities in developing countries, have a comparative advantage in "downstream" FSR because they are closest to the local situations. And, in theory, they have the most direct relationships with national institutions charged with implementing agricultural development projects. Regional and particularly international centers, on the other hand, are best situated to mount "upstream" FSR programs, as their mandates normally encompass large geographic areas, cutting across national boundaries, with problems that provide a research focus for "upstream"

---

[1]At issue is not only the relationship of national programs to FSR, but also the appropriate division of responsibilities among national, regional, and international centers across the entire range of agricultural research activities. These broader issues are beyond the scope of this study. For a useful discussion of agricultural research in developing countries, see Moseman (1970).

FSR programs. Regional and international centers also tend to command the required financial and personnel resources for "upstream" programs. Finally, regional and international institutes can play catalytic and supporting roles in the development of "downstream" FSR programs at the national level.

6.1 PROBLEMS IN EXPANDING FSR IN NATIONAL RESEARCH SYSTEMS

Despite the growing recognition of "downstream" FSR's value, few FSR programs are yet in LDCs. Several FSR-type activities in national systems are special projects funded by donor agencies, which, in many cases, are not well integrated into the core activities of national agricultural research institutions. Prospects for successfully introducing FSR programs at the national level are influenced by a complex of intra-and inter-institutional relationships involving national agricultural institutions and universities, implementing agencies, including ministries of agriculture, natural resources, and rural development, planning departments, and funding agencies.

6.1.1 FSR and national agricultural research institutions/universities

National FSR programs are commonly and logically associated with existing agricultural research institutions. But some FSR activities have not been readily accepted by such institutions for the following reasons:

(1) Resource limitations. National agricultural research organizations in LDCs are generally thinly staffed, sometimes include a high percentage of expatriates, are poorly supported, and depend heavily on external donor agencies for assistance--often even for some recurrent expenses. Such organizations often hesitate to initiate FSR on their own account because doing so diverts resources from resource-starved, on-going national research activities.

(2) Reluctance to change. Most scientists at national insitutions have been trained and have experience in disciplinary and commodity research programs, so many have limited

understanding and mixed feelings about FSR.[1] And research institutions usually are set up along disciplinary or commodity lines, so incorporating FSR can create jurisdictional problems and formidable obstacles to redefining responsibilities.

(3) Self-sufficiency and professional image. People in many developing countries resist looking to outside regional or international institutions for research results that can be adapted to local situations. They may think that "borrowing technology" will relegate the in-research establishments to permanent secondary or even tertiary status in the hierarchy of agricultural research.

(4) Time required to establish an efficient and credible FSR program. Even where existing agricultural research institutions agree to initiate FSR-type activities, they may not have the patience to allow them to become effective. Researchers charged with implementing FSR programs characteristically have little or no experience in multidisciplinary team efforts.[2] A FSR team gains experience and credibility over time and through the continuity of staff. Further, linkages with planning, funding, and implementing institutions also take time to develop.[3]

---

[1]The difficulties involved in mounting FSR-type activities in connection with the Caqueza project in Colombia illustrate this problem (Zandstra, Swanberg, et al., 1979).

[2]The initial years of an FSR-type program in Honduras illustrate this problem. Despite a desire by researchers to work together, the path of least resistance was to revert to traditional commodity and discipline oriented experiments (J. Posner, personal communication, 1980).

[3]For additional discussion of the efficiency and credibility of FSR, see Chapter 4.

Among the critical ingredients for introduction of FSR into national agricultural research institutions are both technical and social scientists in the institution. Then FSR-type activities might simply evolve naturally, via collaborative efforts among researchers, without a special new program.[1] If the agricultural research organization has no social science research responsibilities, special ad hoc arrangements may be necessary to mount multidisciplinary research efforts. Zandstra (1978) suggests that teams drawn from more than one institution can complicate administrative lines and place extra demands on team coordinators.

Universities in the developing world may increasingly be used for FSR programs, as all the necessary disciplines are located in the same institution and more flexibility may exist in using existing research resources.[2] In some countries, universities and other training institutions have few or no formal research responsibilities, but staff members frequently are interested and willing to participate in special undertakings, if external funding is available. Such involvement might be directly linked with FSR training activities as discussed in Chapter 7.

On the negative side, FSR-type efforts in universities may create problems related to tenure and promotion, which tend to favor publications from research oriented along disciplinary and academic lines. And FSR-type programs in universities may be difficult to carry out on a continuing basis and may not qualify for core budget support.

Collinson[3] suggests that both positive and negative strategies might be used in promoting FSR programs in LDCs. On the positive side, technical scientists may appreciate receiving information which farmers can provide, through FSR approaches, on research priorities for specific target groups. Extension recommendations can be reviewed

---

[1]The FSR-type activities at the Institute of Agricultural Research at Ahmadu Bello University in Nigeria evolved that way (Norman, 1973).

[2]The Central Luzon State University project with Kansas State University is an example of an FSR-type program located in a university.

[3]Personal communication.

with a view to eliminating components unacceptable to farmers or to modifying them. On the negative side, the on-going research programs can be critically reviewed from a FSR perspective specifically focusing on issues relevant locally and acceptable to farmers.

6.1.2 Should separate FSR units be established?

As a general observation, we view FSR as a process that can be incorporated into existing research programs as a "philosophy" of research or established as a separate administrative and substantive unit within an agricultural research institute. It is not necessary, nor perhaps even desirable, in many instances, to have an administratively independent "farming systems research unit." Several agricultural research institutes in LDCs already have quasi-FSR activities that simply evolved from collaborative projects among researchers. Such an evolutionary process may be the most effective way of promoting FSR even if the activity does not bear the FSR label.[1] Of course, such an evolution may not emerge in some situations. When agricultural research activities and development policies are not focused on the needs of small farmers, FSR might take root only as part of a general reorientation and reorganization of the total research system. In Guatemala, FSR activities were initiated after a major reorganization of the national agricultural research system (Fumagalli and Waugh, 1977).

6.1.3 FSR and implementing agencies

Closely related to the problems of introducing FSR nationally are relationships between FSR programs and the various national and local organizations charged with implementing rural development projects and programs. The following obstacles may prevent the development of FSR programs to serve local projects:

---

[1] We are grateful to Ryan (personal communication) for this point, which was made with specific reference to FSR-type activities in India.

(1) Conflict with national policies. National policies may support commercial farming and the development of capital-intensive technologies. FSR cannot thrive without a strong commitment to rural development.

(2) Bureaucratic centralism. Even where there is a commitment at the top, as in India, FSR programs may be frustrated by the non-responsive government bureaucracies that look on the central ministry headquarters as the source of all wisdom and direction. The organization of the agricultural development effort may already be so fragmented along regional, commodity, discipline, and functional lines that opposition to FSR programs--to say nothing of a reluctance to implement results of FSR work in a particular area--may be great (Gupta, n.d.).

(3) Conflict with authorities in development projects. Few parts of the developing world are unscarred by development projects. Old programs that failed often leave a residue of bitterness and opposition among local residents to everything connected with the government. FSR teams going into areas with unpopular on-going projects are faced with the worst of both worlds, opposition of local people and suspicions of implementing agencies that do not wish to be discredited. Yet on-going projects often provide an opportunity for FSR to contribute by identifying changes in recommended practices or to provide evidence needed to terminate the project.[1]

6.1.4 FSR in relation to funding and planning agencies

National agricultural development banks and donor agencies are a potential ally of FSR at the national level. They have procedures for identifying, designing, appraising, monitoring, and evaluating rural/agricultural development projects. They also have policies that

---

[1] The often tragic experiences in Bangladesh with various large scale irrigation schemes during the 1960s are examples of situations that might have been avoided by applying FSR (Thomas, 1972).

explicitly direct them to devote an increasing share of their resources to assisting rural areas and the poorest of the poor. In many cases, such agencies are actively seeking ways to improve their somewhat mediocre performances since 1960. Ways might be sought to incorporate FSR activities into the identifying, designing, monitoring and evaluating activities of the agencies. However, some are staffed with veterans of agricultural development who contend that FSR is too complicated, costly, and time-consuming to be useful in preparing projects.[1] Preparing a project already is an involved process and FSR could become another bottleneck, impeding efforts to "move" more resources to support rural development.

FSR programs may find an ally in national and regional planning agencies. Planning agencies often are poorly staffed and not effectively integrated into governmental decision-making processes. Yet they often are given responsibility for vetting development projects and generally assessing the merits of annual budgets. That makes them receptive to mechanisms that can improve project designs and assist them in monitoring/evaluating on-going projects. The FSR approach in project design, monitoring and evaluating might be promoted by planning agencies.[2] To require all implementing agencies to use FSR in the first instance might only create serious bottlenecks, because the capacity to provide such services is not likely to exist in most countries. So a gradual and selective "imposition" of FSR is probably preferable.[3]

In summary, a range of inter- and intra-institutional issues at the national level bear directly on the feasibility of FSR programs. Resolving the institutional issues is the key to FSR's future success. Examples of success either of functioning FSR teams composed exclusively of nationals who are producing results or of successful development efforts with the FSR approach as a major ingredient do not yet exist. The success of Guatemala's functioning FSR-type program to date is

[1] See Section 4.4 for further discussion of the efficiency issue.

[2] ICTA is thus involved with planning agencies in Guatemala.

[3] See Sections 5.4.1 and 5.4.2 for further discussion of FSR in the monitoring and evaluation of projects.

limited. Ironically, the conditions that have made increasing numbers of institutions look to FSR as a way to improve agricultural development in specific locations mitigate against achieving a spectacular Green Revolution-type of breakthrough for large areas that would give great impetus to the development and acceptance of FSR. The spectacular breakthroughs that took place in the relatively few well-endowed areas of the developing world--such as Punjab--are not likely to be repeated in less favored areas where smaller incremental changes are more likely. In addition, FSR is by nature conservative because it is linked to helping farmers in the context of existing farming systems.

6.2 FSR AT THE REGIONAL AND INTERNATIONAL CENTERS

The range of institutional issues confronting FSR programs at regional and international levels is as complex as those at the national level. But being relatively new and well funded gives international and regional centers several advantages over national programs. Also, FSR at the IARCs has recently been strongly endorsed (Technical Advisory Committee, 1978). Still FSR programs at the centers vary considerably in scope and quality. One participant-observer of the FSR scene commented that: the 1978 TAC review reflected "the professional chaos over the subject (FSR); most centers doing different things and none doing FSR as the Review Team defined it" (Collinson, 1979a).

FSR programs at regional and international centers are distinguished by being "upstream" or "downstream" in character. FSR activities in support of sharply defined commodity programs as in IRRI and CIMMYT tend to have more sharply focused research activities and fewer methodological problems. Although FSR initially examines the "total" environment, the ratio of variables to parameters is quite low, with variables limited to potential improvements in practices related to target commodities. Programs with a regional focus, on the other hand, have many variables and correspondingly more methodological problems. Much farming systems work at IITA and ICRISAT, for example, is a prerequisite component to developing prototype solutions that could cut across disciplinary and sub-program lines. The tendency for much of the work at the Centers to be organized along disciplinary lines

is further reinforced by scientists' training and experience in research organized along disciplinary or commodity lines. Their backgrounds and their need to remain viable in their respective disciplines by producing publishable research results mitigate against change.

Critics of "upstream" FSR programs contend that the activities are too academic, too removed from the real world, and the results are unlikely to be used readily in national programs, to say nothing of use by farmers themselves. Such attitudes undoubtedly contributed to terminating the "upstream" Farming Systems program at CIAT.[1] "Downstream" programs, on the other hand, are increasingly perceived as useful, particularly because of the poor record of improved practices introduced without being screened via "downstream" FSR programs. Although FSR is unlikely to generate Green Revolution-type advances, it can focus research on developing practices more acceptable to small farmers.

The orientation of the FSR programs at regional and international centers has important implications for national programs. The "downstream" programs generally work directly with national programs while the "upstream" programs develop sub-program areas and methodologies that might be adapted by national programs to local conditions.

Often "downstream" activities in national programs are weak or nonexistent. Regional and international centers have sought to assist in developing national FSR capabilities through training and technical assistance. The work of IRRI through the Asian Cropping Systems Network is the most successful example. While it is generally agreed that stronger national FSR programs are desirable, opinions differ widely over the roles that regional and international centers should play. The key issue is the appropriate mixture between assistance to national programs in the form of training and technical assistance, on the one hand, and the production of research results on the other. An increasingly prevailing view is that the two features are closely related in both medium- and long-term perspectives. Strong national programs will improve the quality of research at regional and international centers. We further argue that strong national programs are essential both to define problems for "upstream" programs and to adapt prototype

[1]See Appendix A1.5 for the history of FSR activities at CIAT.

solutions from "upstream" programs into local conditions.

Extensive involvement of the centers in promoting FSR programs at the national level also has some problems. IARC cooperative programs with national institutions, for example, tend to favor regions/sub-regions where the conditions seem to fit the constraints and solutions defined by a center's FSR program. So IRRI tends to work in areas where crop intensification offers the most promise, and ICRISAT tends to work in areas where soil and water management at the watershed level appear feasible. In the short and medium run, FSR programs at the regional/international centers are likely to devote most of their efforts to assisting in developing national FSR capacity and to developing FSR methodology around certain assumptions about the constraints. They may also provide services to the commodity improvement programs by testing the technical and economic feasibility of certain innovations in a farming systems context. That is particularly true of the economics sub-programs, which in the case of IITA often do more work for commodity improvement programs than strictly within the Farming Systems Program. As the FSR programs mature, both at the IARCs and at national levels, a new set of roles is likely to emerge. The focus of FSR work should increasingly reflect the results of FSR at the national level. Additionally, the FSR program should increase inputs for determining research priorities of IARC's crop improvement programs. That is not currently the case. The commodity improvement programs often have proven records. At best, many scientists in the crop improvement programs look at the FSR program as a service organization for them, certainly not as a source of ideas for research priorities. Finally, the crop improvement programs often tend to have stronger links with national crop programs than FSR programs do.

6.3 POSSIBLE ROLES FOR DEVELOPED COUNTRY INSTITUTIONS

Agricultural research and training institutions in the developed world have had a profound impact on the character of national, regional, and international agricultural research centers that serve the developing countries. The basic agricultural research structure in developing countries is largely the product of colonial inheritance, post-independence technical assistance programs, and donor-dominated

consortiums that govern the IARC's. Nationals of developed countries continue to form a significant share of the agricultural research staff in the developing world. Third World agricultural scientists in most cases received their training at developed country institutions (DCIs). Advanced-degree training in universities in the developing countries is closely modeled after training programs in various high-income countries.

Despite considerable accomplishments, agricultural research in the DCIs has been criticized because it tends to be oriented around individual disciplines that are often geared toward refining technologies that are inappropriate for the ecological conditions and resources of most of the developing world. Further, DCIs have been a primary source of a "top down" orientation in the design and extension of new technologies. In addition, DCIs are even more physically removed or isolated than the IARCs from the various local situations that are the ultimate foci of FSR. With some notable exceptions--GERDAT in France, for example, the primary clients of DCIs are the agricultural communities of the countries where the institutions are located. Yet the DCIs possess resources and influence that can be of considerable assistance in developing FSR, as illustrated by the following examples:

(1) DCIs are likely to continue to be major sources of technical assistance and training in support of agricultural research in developing countries. Incorporating FSR perspectives in their efforts might enhance their effectiveness. A small but growing number of technical scientists and social scientists at DCIs have had FSR experience and are among its most active proponents.

(2) FSR may provide an effective means of defining or focusing research on energy conservation and environmental quality, which became important issues during the 1970s in the developed countries (Castle, 1977). Specifically, FSR may provide a framework in which different disciplines can relate to one another and interact with farmers, while designing and testing improved practices with such issues in mind.

(3) DCIs may assist national, regional, and international agricultural centers with the development of FSR methodology.

(4) For DCIs serving areas with large numbers of small farmers--as is true for parts of the U.S.--FSR offers a way to assist more effectively in rural development and "domestic" agriculture.

7. TRAINING IN FSR

A major problem involved in establishing farming systems research programs is the lack of agricultural scientists and social scientists with FSR training or experience. Few agricultural or social scientists have any experience with interdisciplinary research or more than a superficial understanding of the terminology and methodology of other disciplines. If FSR programs are to grow and be effective, they must be staffed by individuals with training and experience in FSR, which is largely unobtainable outside of existing FSR programs.

We believe that the training needs for "downstream" FSR programs can most effectively be met through intensive non-degree courses in areas where participants are expected to work--or at least in an area with similar farming systems. Although participants in FSR activities should have at least a first degree in some agriculture-related discipline, a separate degree program in FSR is not required. At the same time first degree programs in specific disciplines might be modified to include courses and research methodology for students interested in FSR as a career. Let us examine the requirements for FSR training and then training in FSR in relation to degree and non-degree programs.

7.1 REQUIREMENTS FOR FSR TRAINING

Few advocates of FSR argue that FSR is a separate and distinct field, particularly at its present stage of development. At the level of the national program, FSR is a methodology for more systematically identifying constraints and designing and testing improved strategies in various locations. The task of developing the component parts of a new technological package can be addressed by training in the traditional disciplines. In addition, although there are certain core disciplines involved in FSR, one or more of a wide range of disciplines may be required in particular situations. Participants in FSR programs should bring substantive competence in at least one discipline, and the interdisciplinary dimension should involve a team with expertise in the requisite disciplines. The FSR approach is not simply a collection of individuals working in their own fields of specialization

but a team that works together to produce a common product--improved strategies suited to specific situations.

The objectives of training programs in FSR should be: first, to help participants understand the basic features of the farming systems in the areas were they will work; second, to instill a sense of multidisciplinary understanding and tolerance; and third, to encourage participants to work creatively and efficiently with farmers and extension workers. These objectives can best be met by having participants carry out FSR in the field under the direction of trainers with FSR experience. Field experience can be supplemented by lectures on such subjects as experimental design for farm trials and budgeting. We believe an intensive course of at least two weeks duration is necessary for the team to gain experience in working together.

7.2 FSR TRAINING AS A PART OF DEGREE PROGRAMS

Few universities now provide training in FSR as part of first or graduate degree programs. But several U.S. land grant institutions are seriously considering modifying training programs to better suit students interested in FSR. The nature of FSR, namely its locational specificity and the need to modify methodologies to suit local conditions, strongly favors training on location--in the developing world for students seeking careers in agricultural development there, for example. But currently few training institutions in the developing world offer programs specifically related to FSR in the context of regular degree programs.

The historical evolution of formal degree training in agriculture has involved increased specialization. Also, few university professors have experience with FSR. So it is difficult to advise students seeking careers in FSR and to find the necessary expertise to teach courses and to direct research in farming systems.

The growing number of institutions of higher learning in agriculture concerned with how to train students for careers in FSR seem to agree on the following issues:

(1) Competence in an existing discipline is required. Thus training for careers in FSR should take place within degree

programs of the existing disciplines. FSR is not a separate discipline.

(2) Since interaction among disciplines is a key feature of FSR, graduate students, in particular, should be conversant and sensitive to the basic concepts, terminology, and methodology of the core disciplines involved in FSR. That might be accomplished in one or two survey courses covering all the disciplines involved.

(3) Identifying problems is a key ingredient of FSR. Students should be able to diagnose a variety of situations and enterprise combinations--annual crops, perennials, multiple cropping in its various forms, livestock, and non-farm activities--in close cooperation with colleagues in other disciplines. A special course may be required to handle the methodology to deal with various enterprise combinations. Such a course should include field research by students working together in small interdisciplinary groups applying the FSR approach.

(4) Students with an interest in FSR should be made aware of the heterogeneity of farming systems throughout the world. Several institutions already offer courses that expose students to the salient features of the principal types of farming systems in the world. Such courses might be slightly modified to form a sequence with a course on FSR methodology.

(5) The most important "modification" in existing degree programs for students seeking careers in FSR is to gain field experience in FSR, possibly through thesis or dissertation research. However, that approach faces two problems:

   (a) The research should be carried out by a team, a common product should be produced, and the product must be somehow disaggregated to satisfy the thesis or dissertation requirements of individual team members.

   (b) The direction of an FSR project for students requires a team of faculty supervisors from various involved disciplines who are familiar with the approach and willing and able to work closely together.

In some cases research at national, regional, and international agricultural research institutions in the developing world can form part of a degree program for individual students; most of the international centers have such arrangements with nearby schools of agriculture. Additionally, students pursuing degrees at institutions in developed countries also have carried out dissertation research at international centers in FSR related areas. Both Cornell and Kansas State Universities have been involved in cooperative training programs with CIMMYT in Mexico, under which groups of masters and doctoral students from various disciplines have spent time at CIMMYT working together as a team, although FSR was not the specific focus. Such arrangements can significantly enrich training experiences. However, an FSR experience at an international center still requires a supervisor in the degree granting institution who understands and appreciates FSR. And that may be difficult to arrange. In addition, a fair amount of training or research direction of students by scientists in FSR programs at international centers is "upstream" and oriented along traditional disciplinary lines.

7.3 NON-DEGREE TRAINING PROGRAMS IN FSR

Training in FSR is still largely confined to non degree programs at national, regional, and international agricultural research institutions, where students can carry out research under the direction of scientists in the FSR or Cropping Systems Programs.

CIMMYT has recently initiated a three-month, FSR-type training program specifically for economists. Participants receive instruction and gain experience by using applied economic methodologies to analyze specific farming systems. Particular attention is given to sensitizing economists to the biological aspects of crop production. Technological improvements in maize and wheat production are emphasized, and policy issues also are considered. Activities include field work, seminars, and independent work in collecting and analyzing information on existing farming systems, developing research and testing plans, on-farm experimentation, maize/wheat breeding and agronomy, and such policy issues as organization of agricultural research and pricing/marketing policies (CIMMYT, 1979).

Among the "upstream" FSR programs, the training activities at IRRI are probably best developed (Technical Advisory Committee, 1978). Virtually all IARC's have training programs of various types involving personnel from the farming systems or cropping systems programs in these institutions. However, much of the training is on an individual basis or oriented toward such specific sub-program areas as soils or economics. It is expected that more FSR-type courses will be offered as the FSR programs in these institutions develop.

A select number of national research institutions in the developing world also are mounting training programs in FSR. These are primarily designed to serve the institutions involved; that is, training as a prelude to actual FSR activities in the field. Their programs are particularly valuable in this respect because FSR is fairly location-specific. The general model at the national level must be adapted to the needs and realities of specific regional situations.

ICTA in Guatemala puts both production and new social science staff members through a one year in-service training program that combines field experience in FSR with classes in specific research techniques, including statistical analysis. Teams of participants going through the sequence of FSR activities analyze actual farming systems and design and test improved crop and livestock practices. Individual thesis work in connection with an advanced degree is part of the participants' programs.[1]

[1]Hildebrand (personal communication).

8. CONCLUSIONS

8.1 CURRENT STATUS AND POTENTIAL OF FSR

In FSR the farm is viewed in a comprehensive manner and constraints in the farming systems, research priorities, and strategies for improvement are evaluated in terms of the whole farming system. The objective of "upstream" FSR is to develop prototype solutions, primarily through experiment station work, in order to overcome general constraints in the zone in which the upstream research is being conducted. "Downstream" FSR is more applied, and includes the farmer in the research process. "Downstream" FSR includes the selective use of available information ("body of knowledge" in Figure 2) in the process of designing practices or recommendations which are suited to a specific local situation.

This review of FSR activities, by focusing primarily on "downstream" programs, concentrates on how FSR can help generate technology appropriate to small farmers. The review does not give adequate attention to marketing, rural small scale industry, or to national policies and structural barriers to more effective participation of small farmers in the developmental process. The shortcomings and omissions stem partially from FSR's newness in many countries, especially in some national research systems.

We think a compelling case can be made for incorporating FSR in both design of rural development efforts and in determining research priorities in commodity and discipline programs. FSR explicitly recognizes farmer goals and seeks to include community and societal goals. The use of multidisciplinary teams of researchers facilitates the interaction of technical and socio-economic perspectives, which complements, rather than overrides, the wisdom and experience of farmers and extension workers. Although current FSR activities focus primarly on the range of technical solutions to improving agricultural productivity--particularly with reference to crops, increasing attention is given to such nontechnical factors as input and output markets and macro policies. Finally, FSR can complement and strengthen commodity disciplinary research programs by increasing their relevance and effectiveness.

Despite the theoretical attractiveness of FSR, it will take time, resources, and improved understanding of the whole process before FSR is operating on a broad scale. In short, FSR is relatively young and is likely to undergo considerable refinement in the years ahead.

8.2 CONCERNS ABOUT FSR

We have three major concerns about FSR. The first is the possible incompatibility of private and societal interests. When FSR responds to the short-term needs of farming families, societal interests need to be considered. But that is likely to be particularly difficult because it calls for predicting what might happen in the future. Nevertheless, ignoring the broader macro and societal interests could have an irreversible, deleterious impact in the long run, such as reducing ecological stability, increasing income inequalities, etc. Second, because the evolutionary character of "downstream" FSR is not likely to generate the spectacular changes exemplified in the Green Revolution, it may be difficult to secure the funding required to sustain FSR--especially at the national level--over time. Third, and perhaps most important, FSR may not be given ample opportunity to prove itself. FSR is rapidly gaining acceptance, particularly with the donor agencies, which are encouraging its adoption by national research organizations. Expectations are running high. FSR is regarded by some as a panacea. But FSR clearly is not a panacea for solving all the problems facing small farmers. The hope is that sufficient progress can be made to sustain FSR's credibility while it grows, in the face of inevitable disappointments.

8.3 FUTURE DIRECTIONS

Most of the methodological and implementation issues discussed in this review can be directly translated into an agenda of action for proponents of FSR. On the methodological side, the cost effectiveness of FSR will not be resolved until more information has been generated on its costs and benefits in different ecological zones. Methodology needs to be developed for effectively incorporating livestock

systems and societal, environmental, and distributional impacts. The interaction between "upstream" and "downstream" programs is likely to become increasingly critical in the future, as further improvement in agricultural productivity in certain areas will require major changes in farming systems.

Ultimately, FSR will be judged less by the "correctness" of its methodology than by how much it contributes to rural and agricultural development. Operational linkages are needed between FSR activities and the entire range of agricultural research, development planning, and program implementation.

We view FSR as a process, not a structure that should be established as a separate unit in an agricultural research institution or development project. However, major changes in the structure and orientation of rural development efforts--research, planning, and implementation--may be required in order to make effective use of FSR in integrated rural development projects.

We started our review by discussing how FSR came into being in response to shortcomings of commodity and disciplinary research programs. Where FSR is going is more difficult to predict. Will it prove to be a means by which small farmers can be helped in the future? Or will it be a passing fad too difficult and too demanding in personnel and in time and costs? We think FSR can make a modest but significant contribution to improving the lives of small farmers in the Third World.

APPENDICES

A. Description of Selected Farming Systems Research Programs

B. Farm Management Research

AI. INTERNATIONAL INSTITUTES

A1.1 CIMMYT (CENTRO INTERNACIONAL DE MEJORAMIENTO DE MAIZ Y TRIGO), MEXICO CITY, D. F. MEXICO

A1.1.1 Basic orientation

The basic structure of the Center consists of two crop improvement programs (maize and wheat), the Economics Program, and assorted supporting services including laboratory services, experiment station management, and information and statistical services. CIMMYT's mandate restricts its focus to maize, wheat, triticale, and barley. It often is omitted from discussions of farming systems research. However, all three continents of the Third World have active, longstanding CIMMYT programs. In these cooperative programs CIMMYT has been very concerned with the use of research results, which has led them into a variation of FSR.

CIMMYT found that despite early success in gaining farmer acceptance of improved practices in selected areas, particularly in the better endowed regions of the developing world, and despite major differences in yields between traditional practices and CIMMYT-developed or "improved" practices, the vast majority of farmers were not accepting most of the CIMMYT recommendations. This fact led to the initiation in 1972 of a series of adoption studies involving the Economics Program in cooperation with regional CIMMYT staff and professional staff from several national institutions. The studies revealed that, although size of farm appeared to be related to rates of adoption, by far the most important factor was the extent to which the recommended practices suited the specific environments or farming systems of farmers (CIMMYT, 1976).

The need for technologies better adapted to specific environments led to the initiation of a second effort in 1975 involving ex ante identification of the requirements for new technologies by assessing existing situations, which is basically "downstream" FSR in nature.

The CIMMYT's work in developing technologies, according to Winkelmann and Moscardi (1979), has the following basic orientation:

(1) It concentrates on research with near-term application rather than basic or exploratory research.

(2) It provides for collaboration among biological and social scientists and economists throughout the entire research process.

(3) It focuses on formulating technologies for a single crop or a single crop as part of a mixture rather than full-scale farming systems research.

(4) It formulates useful, but not necessarily "optimal," technologies.

Additionally, virtually all of CIMMYT's work in this area is in the target areas, usually as part of national or regional cooperative crop improvement programs. This is in marked contrast with other IARCs, much of whose research on farming or cropping-systems programs is carried out at the research station.

A1.1.2 Program components

Winkelmann and Moscardi (1979) point out that CIMMYT's efforts to develop suitable technologies consist of four major steps or components:

(1) Identifying relevant farmers, including:

(a) Grouping environments with similar ecologies "to insure that the crop or mixture in question reacts in roughly the same way and confronts roughly the same challenges."

(b) Characterizing the environments in terms of information that may be important to agricultural policy (e.g., area in the crop, production, number of farmers, distribution of farm size, relative importance of the crop, exportable surplus). These steps involve analyzing secondary data but considering "researchers' impressions of the potential for improving technologies." The objectives are to delineate environments and "to permit a first rough ordering of the environments to fit national goals."

(2) Identifying farmers' circumstances, which consists of:

(a) Two sets of activities: exploratory survey work--discussions with farmers, merchants, extension personnel--and observing production practices, marketing conditions, and important competing activities. The results of this survey work, combined with an analysis of secondary data and the knowledge of the researchers (who are often residents of the country), are used to develop "tentative recommendation domains (i.e., sets of farmers whose natural and economic circumstances are sufficiently similar that a given technology will be relevant to each farmer within a set)."

(b) Formal survey work based on questionnaires focusing on issues critical to farmers, including non-farm activities that affect the crop or mixture under study. These surveys help to identify characteristics of the farmer group, including their perceptions of major problems related to the crop or mixture under study. The survey results often identify major or glaring policy implications, such as the absence of an operational input delivery system, or major constraints to expanded production of the crop in question.

(3) Organizing experiments. The survey results are used to identify constraints on expanding production. When solutions are not available, the results orient research station work to produce needed solutions.

(4) On-farm experiments. On-farm trials are used to test the "best-bet" strategies based on the survey work. Together farmers and the research team evaluate the performance of the trials at each critical stage to assess the adequacy of each strategy. As problems develop, they are referred to the experiment station for further analysis. Three types of on-farm trials are used:

(a) Yes-no trials are generally factorial designs intended to assess major effects and interactions of critical limiting factors. Two levels of inputs are normally used: the current farmer-practice level and a significantly higher input level.

(b) How-much trials help determine levels "at which income-seeking, risk-averting farmers might want to use inputs or practices detected as limiting in the yes-no trials. Because evidence suggests that farmers tend to make only a few changes at a time, attention is focused on three or more factors with the highest payoffs." Nonexperimental factors are set to match those of the representative farmers.

(c) Verification trials on more sites take place after strategies have been modified to satisfy farmers and researchers. At the end of the trials, formal recommendations are made and extended to farmers.

The process does not end with formulating recommendations. During the campaign to extend the recommended practices, results continue to be evaluated with a view to improving existing strategies and identifying the next generation of innovations.

A1.1.3 Observations

CIMMYT's farming systems research activities are unique in many respects. They grow from the Center's rather narrow commodity focus and its experience in many countries over the past ten years in designing improved technologies for the commodities. The activities are an integral part of cooperative programs for developing appropriate technologies for specific countries and regions. Research station experiments are limited, with most emphasis on on-farm trials relating directly to maize or wheat and crop mixtures of those commodities, which are treated as variables. Everything else is treated essentially as parameters or givens.

CIMMYT recently initiated a series of training programs that focus on FSR-type activities for economists. The training manual is perhaps the most detailed description of the FSR approach currently available (CIMMYT, Economics Program, 1979; 1980). Illustrations of the FSR approach also have been published by the CIMMYT Economics Program in East Africa (CIMMYT, 1977 and 1979).

A1.2 ICRISAT (INTERNATIONAL CROPS RESEARCH INSTITUTE FOR THE SEMI-ARID TROPICS), HYDERABAD, INDIA

A discussion of farming systems research activities at ICRISAT should include both the Farming Systems Program and the Economics Program. The Economics Program has its own research program in addition to serving the Farming Systems Program and the various ICRISAT crop improvement programs, which deal with groundnuts, pulses, millet, and sorghum.

A1.2.1 Basic orientation

The program objective of the Farming Systems Program is to "develop technology for improving land and water management systems" and "to contribute to raising the economic status and quality of life for people in the semi-arid tropics (SAT) by developing farming systems that increase and stabilize agricultural output" (Technical Advisory Committee, 1978, Annex 4, p. 3). The specific goal of the Economics Program is to identify socioeconomic and other constraints to agricultural development in the SAT and evaluate other ways to alleviate them via technological and institutional changes (ICRISAT, 1977).

Although the objectives of the two programs are quite complementary, their respective modus operandi contain important differences beyond the obvious differences in disciplinary approaches. The Farming Systems Program has an "upstream" orientation and views water as the most limiting factor to production, and soil erosion as a serious problem. In rainfed agriculture "the watershed (catchment) is the logical unit for investigating the optimum development and management of water and soil resources" (Krantz, 1979, p. 4). The resulting research strategy is:

(1) To investigate single production components in depth and to investigate them in a holistic manner in systems research on a operational scale.

(2) To investigate and test hypotheses and to develop approaches and methodologies with wide application for use by national programs, and to tailor the research findings to the specific conditions of the SAT (Krantz, 1979, p. 5). The FSR program

has emphasized study of biological and physical processes involved in farming systems rather than study of actual farm practices, as information on the basic processes is not location specific (Technical Advisory Committee, 1978). Much of the research of the Farming Systems Program in the past, consequently, has consisted of component research along somewhat traditional disciplinary lines and focused on testing various hypotheses. Since 1976 the FSR program has become progressively more involved in cooperative programs with various national agriculture research institutions in Africa and the sub-continent, and more recently emphasis has increased on multidisciplinary on-farm studies.

In contrast, the Economics Program work, which is more "downstream", does not involve specific assumptions about constraints, but allows them to emerge from village level studies. In addition, the Economics Program conducts a range of studies on the economics of various improvement measures in cooperation with the Farming Systems Program and the various crop improvement programs.

A1.2.2 Program components

The Economics Program consists of two major sub-programs, Production Economics and Marketing Economics. Production economics includes comprehensive benchmark surveys, which have been underway in India for four years and more recently in West Africa. The benchmark surveys cover a broad range of farm and household activities including cropping patterns, labor, draft, animal and machinery utilization, household transactions, prices and wages, risk attitudes, diet, and health. Although the investigations are primarily to collect socioeconomic data, agrobiological data on cropping patterns, incidence of diseases, etc. are also included. The agrobiological data collection and analysis are carried out in cooperation with agricultural scientists from the Farming Systems Program and the various crops improvement programs (ICRISAT, 1977).

The Farming Systems Program has five components:

(1) Research in sub-program areas.

(2) Operational scale, watershed-based, resource-utilization research.

(3) Cooperative research with national and regional organizations.

(4) Training programs.

(5) Extension and implementation through national programs.

To date most of the work has been in the first two program areas, (sub-program areas and watershed-based, resource-utilization research). The eight sub-program areas are agroclimatology, hydrology, environmental physics, soil fertility and chemistry, farm power and equipment, land and water management, cropping systems and agronomy, and weed science (Kampen, 1979a).

The watershed-based, resource-utilization research has consisted of simulating land and water mangement techniques on site at ICRISAT. Alternative cropping systems are superimposed, and a distinction is made between improved and tradition levels of management (i.e., technologies). Thus, the station's watersheds are operation-scale "pilot plants where the integrated effect of alternative farming systems can be monitored" (Technical Advisory Committee, 1978, Annex 4, p. 13). Specific subjects of investigation include contour bunding, the broad bed and furrow system as opposed to the flat system, and effects of soil management practices on run-off and erosion.

At noted earlier, cooperative research with various national agricultural institutions and on-farm research has been increasingly emphasized in recent years. It is anticipated that the on-farm studies in West Africa will involve close collaboration between social and technical scientists of the Economics and Farming Systems Programs and may well result in modifying research priorities in the Farming Systems Program in the future. The on-farm research focuses on adapting technologies to local conditions by identifying constraints and the design of village and farmer-level organizations (Kampen, 1979a).[1]

Some of the results of the FSR program to date include: development of prototype systems of improved crop and soil management that use available moisture more effectively, reduce erosion, and manage weeds

[1]Also personal communication.

year round. In addition, the program has effectively adapted tool carriers as animal-drawn precision equipment for use in the improved systems (Kampen, 1979a).

A1.2.3 Observations

The FSR program was one of the initial research thrusts that facilitated linkages with commodity improvement programs. In contrast, the FSR activities at other international centers began in response to problems with acceptance and performance of new technologies (IRRI, CIMMYT) or simply as a depository of a range of non-commodity-specific activities (IITA). The lack of basic information and the need to develop appropriate methodologies in the first instance led to initial concentration on component research in the various sub-program areas. Further, socioeconomic research was assigned to a separate Economics Program. Thus, research activities seemed to be divided along disciplinary lines. Technical scientists in FSR developed data bases, methodologies, component technologies, and (later) model systems of improved soil and water management. The work was largely confined to the research station and in some instances rested upon somewhat heroic assumptions about the problems and feasibly improvements for the range of farming systems found in the semi-arid tropics. In contrast, initial years of ICRISAT's village level studies were essentially confined to collecting data and analyzing existing farming systems with no significant linkages to adapting and testing technology.

It can be argued that these approaches constituted an essential prerequisite to mounting more integrated FSR activities in subsequent years. The early years probably had two effects: lack of technology adaptation efforts connected with the village studies, on the one hand, and development of component technologies and improved systems of soil and crop management which may not be easily adaptable to many SAT farming systems, on the other. Some erosion-control and water-utilization practices of the improved systems of watershed management developed by the FSR Program require collective farmer participation, which some workers feel is unrealistic in many parts of the semi-arid regions.

In recent years research seems to have spread across program and disciplinary lines. Technology design and testing is now part of village level studies (Binswanger and Ryan, 1979). And on-farm studies have been initiated by the FSR Program in cooperation with the Economics Program. Research efforts also seem to be less sharply focused on improved soil and water management practices in watershed units, while attention has expanded on other constraints and approaches that grow from analyses of existing farming systems--particularly for the on-farm studies planned for the West African region where joint participation of the Economics Program and the FSR Program is envisaged. Thus the trend is toward developing a more integrated set of FSR activities involving both "upstream" and "downstream" features.

A1.3 IRRI (INTERNATIONAL RICE RESEARCH INSTITUTE), LOS BANOS, PHILIPPINES

A1.3.1 Basic orientation

IRRI refers to its work on multiple cropping and intercropping as cropping systems rather than farming systems research. The focus is on rice cropping systems and how to intensify cultivation and use resources more efficiently on small, rice-producing farms. Since land is limited and yields per hectare per crop have reached upper limits in East and South Asia, IRRI focuses its research on increasing multiple cropping both of rice, and rice in combination with, or in sequence with, other crops including grain legumes, sorghum, and mung beans.

A major component of IRRI's program has been fostering national programs to carry out cropping systems research in their respective countries/regions. In 1974 this cooperative effort was formalized at the regional level and the Asian Cropping Systems Network (ACSN) was created to link the national programs with IRRI, which facilitates development of cropping systems methodology and communicates research needs and results. Thus, IRRI's Cropping Systems Program (CSP) includes important "upstream" and "downstream" features that are closely linked.

A1.3.2 Program components

The CSP has five primary components: environmental description, cropping-pattern design, cropping-pattern testing, component technology, and preproduction testing (IRRI, 1978). Those five components are practiced in some form by both the CSP at IRRI and by those who participate in the ACSN through various national programs.

(1) Environmental description. The CSP is based strongly on the premise that much can be learned by understanding existing farming practices. So the objective of the environmental description is "to identify more accurately the relation of physical and socioeconomic environmental variables to cropping pattern performances and to use this information in developing multiple cropping technology" (Technical Advisory Committee, 1978, Annex 5, p. 5). The environmental description includes site selection, physical description, and economic description. Site selection in Indonesia involves four criteria: the target area must be identified by the government as a priority agricultural zone, be representative of a large agro-climatic zone, be of a type where existing technology can be applied with slight modifications to increase yields and cropping intensity, and must either have marketing and infrastructional facilities or have them in the process of being developed (Cropping Systems Working Group, 1979). Systematic procedures are also applied to selecting specific villages in target areas. Their environmental descriptions call for collecting and analyzing existing data on cropping patterns, population, rainfall, animal traction, and use of purchased inputs--to insure that the sites are "typical" of the target area. Considerable information on the target area is collected and analyzed before the detailed site investigation begins.

(2) Cropping systems design. A systematic analysis of the agro-economic profile data provides the basis for the initial design of an "improved" cropping system. Specific concerns at IRRI have been: establishing planting dates by rainfall

probability; using a crop simulation model to best fit cropping patterns with soil and climatic data; and using various measures and experiments to determine the feasibility of intensification measures. The last includes the influences of crop duration on rice yields, reduction in tillage between crops, use of old seedlings, and yield loss to insects in dry-seeded rice (IRRI, 1978).

(3) Cropping systems testing. The resulting "improved" cropping systems are field tested. Under the CSP more than 80 percent (one of the highest percentages of any of the IARCs) of the testing activities are conducted "off-site". Selected sites in the Philippines, supervised by IRRI, are used to test a variety of combinations of specific practices and crops. Only the most promising cropping systems are field tested under farm conditions and farmer management.

(4) Component technology. The analysis of existing situations or results of field testing may suggest additional research on specific issues when the readily available technology is not closely suited to existing conditions or further adaptation is needed. At IRRI component technology research now focuses on the following areas: weeds in dryland crops planted after rice; effect of crop rotation on weed growth; rice stubble management and cowpea insects; establishment of corn after rice; soybeans after wet-land rice; and variety testing for cropping systems. Some of the research areas represent problems identified during field investigations in various national cropping systems programs (IRRI, 1978).

(5) Preproduction testing/implementation. Modifications in cropping which are successfully tested may then be used in pilot production programs. IRRI has successfully--through its Kabsaka and Kasatinlu programs--introduced double cropping of rice in the Philippines. Developing and testing cropping systems requires close contact with extension service personnel who assume an increasing role in the pilot production stage. The objective is to determine the suitability of specific recommended practices over a broader

geographic area than emerged from the design and testing stages (IRRI, 1978).

In Indonesia, Cropping Systems Research teams maintain contact with extension programs to compare, design and test results. When new problems emerge, they are subjected to the sequence of procedures outlined: environmental description, cropping system design, cropping system testing, component research, and preproduction testing (Cropping Systems Working Group, 1979).

Much of IRRI's CSP work is carried out by or in collaboration with individual members of ACSN. The network now consists of 25 locations in seven countries throughout South and Southeast Asia. ACSN objectives are:

(1) "To provide a mechanism for joint programs between the national programs of the region and IRRI.

(2) To provide a series of data points on the Asian climatic grid for determining cropping systems potential in major zones of the region.

(3) To develop cropping systems technology for the major rice-growing regions in Asia.

(4) To enable IRRI to extend relevant methodology and technology into national programs.

(5) To provide a mechanism for long-term upgrading of national efforts." (Technical Advisory Committee 1978, Annex 5. p. 7).

Test sites characteristically include two or more villages with several farmer cooperators at each site. "Economic" farmer cooperators are used to collect farm records. "Agronomic" cooperators are involved in the cropping-pattern trials. Component technology may also be tested on farmer fields at the research sites (Technical Advisory Committee, 1978).

IRRI also is involved in an ex post evaluation of improved rice technologies in response to major yield differences between experiment station and farmers' fields in many parts of South and East Asia. The results so far suggest that the varieties recommended and associated agronomic practices often are not well adapted to existing farming systems and that needed inputs such as credit and fertilizer are difficult to obtain (IRRI, 1977 and 1979).

A1.3.3 Observations

The cropping systems research at IRRI, together with the activities of the ACSN, encompass a range of "upstream" and "downstream" FSR-type activities that are well linked to one another and to the crop improvement research on rice. IRRI's relative "success" in this area appears to stem from the program being in existence many years--although the current focus on intensifying rice cropping systems and involving several disciplines dates from 1974. Perhaps more significantly, the relative similarities of the farming systems in the South and East Asia regions and the narrow commodity focus facilitated sharpening the CSP research program to a degree not found at other institutes. And the national research establishments in the region tend to be staffed better than institutions in other regions of the Third World and thus have more capacity for meaningful participation in an ACSN-type arrangement.

On the other hand, IRRI's sharp commodity focus--and consequently its failure, in designing improved technologies, to consider a broader range of factors that influence farming systems of the region--may also contribute the significant yield differences that are the subject of ex post investigations now in progress (IRRI, 1977). The comprehensive nature of the analysis of existing systems, which forms part of the activities of the ACSN, suggests that the deficiency is being remedied.

A1.4 IITA (INTERNATIONAL INSTITUTE OF TROPICAL AGRICULTURE), IBADAN NIGERIA

A1.4.1 Basic orientation

IITA now has the largest and possibly the most complex set of FSR activities of any of the international centers. The Farming Systems Program was created in 1972 to integrate on-going research that did not relate to specific commodities, including such fields as agricultural economics, soil science, agronomy, nematology and microbiology, and agroclimatology (Technical Advisory Committee, 1978).

IITA's Annual Report for 1978 described the primary focus of the Farming Systems Program as ". . . developing methods of crop management and land use suited to the humid and sub-humid tropics which will enable more efficient and sustained production of food crops to be technically and economically feasible in these zones" (IITA, 1979a, p. 65).

The research program is primarily concerned with developing improved practices directly affecting food crops in the process; the program interacts with three crop improvement programs--cereals, roots/tubers, and grain legumes. However, the interrelationships are considered between the food crops, on one hand, and livestock and perennial crops, on the other (IITA, 1979a). IITA's Farming Systems program now is essentially "upstream".

A1.4.2 Program components

IITA's Farming Systems Program has five components (IITA, 1979a):

(1) Regional analysis involving analysis of farming systems of the region to identify potentials and constraints on production.

(2) Cropping systems involving development of improved cropping practices and alternative systems of crop management.

(3) Land management involving development of improved methods for land clearing and soil management.

(4) Energy management involving development of implements and methods to relieve energy constraints to crop production and processing.

(5) Technology evaluation involving developing, testing, and evaluating improved practices and systems.

To date, most of IITA's Farming Systems work has been on-site at IITA in the derived Savanna zone of West Africa. Increasing emphasis is now being placed on research carried out at the Onne Station, with its high rainfall and acid soils. As research develops in various sub-program areas and disciplines, the Farming Systems Program is approaching the time when it will work increasingly with national programs in integrating research findings into existing methods of

crop production and land management. Some of the major accomplishments of the Farming Systems Program to date have been (IITA, 1979b):

(1) Analyses of influence of soils, climate, and changing-population pressures on productivity and management of agriculture resources.

(2) Specification of crop adaptability related to weather, soil, and hydrological factors.

(3) Identification of crop rotations, mixtures, and cover crops that more fully exploit the environment while maintaining or increasing soil fertility.

(4) Adaptation of zero and minimum-tillage techniques to minimize soil erosion and maintain soil fertility under medium-to-large-scale mechanization.

(5) Development and improvement of agricultural tools and implements relevant to peasant farming in tropical Africa.

A1.4.3 Observations

Because of the wide array of constraints in the humid and subhumid tropics and because IITA has primary or secondary responsibility for virtually all the major annual food crops in the region, FSR is "upstream" in orientation and broad in scope relative to FSR at other IARCs.

The FSR program at IITA has had difficulty in achieving overall coherence, partly because of the diverse nature and large number of research problems. The program will have difficulty producing extendable results with a large impact in the short run. Much of the research is rather basic, requiring effective national research programs with "downstream" FSR components to refine and adapt the findings to local conditions throughout the region. Most of tropical Africa, however, has few national research organizations capable of assuming this role. Consequently, the amount of off-site work to date has been so limited that many of IITA's results remain untested. In the future, it is understood that IITA will place more emphasis on farm-level studies and offsite testing (Technical Advisory Committee, 1978).

A1.5 CIAT (CENTRO INTERNACIONAL DE AGRICULTURA TROPICAL), CALI, COLOMBIA

CIAT's Small-Farm-Systems Program was established in 1973 to carry out the following activities:

(1) Analyze family farming systems by studying a number of prototype systems.

(2) Synthesize prototype farming systems, then test insights derived on both a component basis and a system basis.

(3) Design improved technology by specifying cultural practices, species mixes, levels of inputs, etc., to be tested on experiment stations or on family farms, for potential introduction in rural areas.

(4) Validate the process by demonstrating that farm families in relevant areas achieved objectives by using the technology selected, and that national agencies adopted the process as a tool to help them achieve their goals.

(5) Implement the process by national agencies in collaboration with CIAT.

(6) Evaluate via methodology to be developed, in order to assess the impact of new technology on human welfare (Technical Advisory Committee, 1978).

CIAT's Small-Farm-Systems program was terminated in 1975 for four reasons. It was too ambitious; it overemphasized both formal systems methodology and computer modeling; its focus was more that of a rural development program than of farming systems; . . . and CIAT's geographical area is so diverse in ecological, institutional, economic, and social conditions that budget limitations precluded any widely relevant in-depth study of whole farm systems on small farms (Technical Advisory Committee, 1978).

A1.5.1 Current orientation

Since 1975 CIAT's research has been organized around selected commodities: cassava, beans, and improved pasture for poor soils in the tropical regions of Latin America, with secondary programs carried

out in cooperation with CIMMYT and IRRI, respectively, for maize and rice.

Termination of the Small-Farm-Systems Program was accompanied by creation of a Special Studies Unit and an Agricultural Production Systems Coordination Group to ensure that technology produced by commodity programs is relevant to small farmers (Technical Advisory Committee, 1978). Further, CIAT has looked to cooperation with national programs to perform the location-specific research necessary to adapt technology to local conditions and provide feedback to be used in identifying research priorities.

CIAT's approach involves developing suitable technologies to bring new lands into production as well as to increase yields on areas now in production. The Pasture Program, involving beef cattle, follows the "new lands" strategy with specific reference to infertile, acid-soil savannas, which include the Llanos of Colombia and Cerrado of Brazil. The commodity programs for beans, cassava, maize, and rice focus on increasing productivity of lands under cultivation with these crops (Technical Advisory Committee, 1978).

A1.5.2 Program components

Since 1975, "farming systems" work has been carried out in each of the three major commodity programs (pasture, cassava, and beans) involving the following elements:

(1) Work with selected cropping associations involving CIAT commodities to insure that new technology developed at CIAT will be applicable in this common type of production system of special significance to small farmers.

(2) On-farm surveys to determine the nature of production systems and factors limiting production of CIAT commodities in selected regions, while developing methodology that can be used by local institutions in other areas.

(3) Collaboration with national programs in on-farm testing of promising new production technology to insure that it is valid under real farm conditions.

(4) Ex ante analyses on new CIAT production technology to insure that it is economically viable for farms of various sizes and under different input/output market situations.

(5) Ex post studies on the adoption of new production technology to determine rate of adoption, distribution of benefits of such adoption, and reasons for nonadoption.

(6) Constant effort in all programs to minimize the need for purchased inputs in the new production technology being developed (Technical Advisory Committee, 1978).

The studies of existing farming systems are multidisciplinary, with economists playing a leading role. In addition, field investigations focus on commodities included in CIAT's mandate, including mixtures of those crops. In this sense there are similarities between CIAT and CIMMYT's work. But the similarity appears to end there. The economic analysis of new technologies, for example, is concentrated on influencing research directions among biological scientists in the respective commodity programs (Sanders and Lynam, 1980). Similarly, farm surveys are advocated as an input into determining research priorities (Sanders and Schwartz, 1980). Thus CIAT's programs are essentially "upstream".

The Pasture Program utilizes the FSR approach in strategy planning. In 1977, CIAT initiated the Beef Production Systems evaluation project, which involves monitoring farms representing different technology levels with respect to natural resources, applied management, physical inputs, production, animal health, and economic considerations. The project is being carried out by the Animal Management and Economics Sections in cooperation with national research institutions in the Cerrado of Brazil and the Llanos of Colombia (CIAT, 1978).

A1.5.3 Observations

A key difficulty in organizing farming systems research at CIAT appears to be that there is no single constraint or commodity dominating farming systems in the geographic region of responsibility--such as water in the case of ICRISAT or rice in the case of IRRI. Given the heterogeneous nature of the Latin American tropics, prime reliance must be placed on a network of national programs, drawing upon innovations

from CIAT's commodity programs, as appropriate, to design agricultural development strategies for specific areas. There are cooperative programs with selected national research institutions in all the commodity programs.

A2. REGIONAL INSTITUTIONS

A2.1 CATIE (CENTRO AGRONOMICO TROPICAL DE INVESTIGACION Y ENSENANZA), TURRIALBA, COSTA RICA

A2.1.1 Basic orientation

CATIE serving the Central American region has one project, Production Systems for Small Farmers, which uses an essentially "downstream" FSR approach.[1] Two related projects deal with soils and general agricultural information and provide selected supporting services to the Production Systems for Small Farms Project (Technical Advisory Committee, 1978).

The objective of the Production Systems Project is to study and quantify the interaction between crops now cultivated by small farmers (either as monocultures, polycultures, or both) and the environment (Technical Advisory Committee, 1978). In cooperation with national agricultural research establishments in the Central American region, CATIE attempts to generate reliable, persistent, and flexible alternative technologies by conservatively managing limited natural resources that will improve productivity of the resources of the small farm systems, thereby contributing to the socioeconomic well-being of the small farmer and benefiting society as a whole (Moreno and Saunders, 1978). A major emphasis is adoption of research results from other institutions (national and international centers) to meet specific local conditions--thus the phrase "development-oriented agricultural research" (Navarro, 1979). Attention is also given to improved practices developed and used by farmers in the same or similar areas.[2]

In 1973, CATIE initiated work on production systems for small farmers with efforts to develop a suitable methodology for field investigations (CATIE, 1978). The outreach phase of the project began in 1975 with the following objectives (Navarro, 1979):

[1]Formerly titled the Small Farmers Cropping Systems Project.

[2]Navarro (personal communication).

(1) To develop, in interaction with national research institutions of the different countries, methodologies or strategies for cropping systems research at the small farm level.

(2) To develop appropriate alternatives for improving present cropping systems in terms of income, production, use of labor, and nutrition of small farmers in specific areas.

In 1979 the project entered a second phase in which activities were extended to include animal production systems and mixed (crop and livestock) systems. In addition CATIE is now involved in developing methodologies for extrapolating the results among areas and studying proper ways to transfer the results to farmers (Navarro, 1979). In this regard, CATIE staff have carried out detailed case studies extending over a whole year of production systems of individual farmers, and have developed conceptual frameworks for analyzing small farming systems (Hart, 1979a, b and c).

A2.1.2 Program components

The basic features of the project include: working directly with farmers and extension agents, and "participation and interaction of several disciplines in a team" (Navarro, 1979, p. 5).

CATIE now is working in all six countries of the Central American Isthmus, but for a variety of reasons most activity is in Costa Rica, El Salvador, and Honduras. CATIE posts one agronomist in each country to coordinate work in that country. A pool of specialists based at the headquarters in Turrialba are drawn upon for short visits.

The field work consists of four stages as follows:

(1) The descriptive stage, including selection of the area to be studied on the basis of national priorities and potential for improvement, and a study of the actual farming system(s) of the area with a view to determining the "real constraints of farmers and the type of technological changes required to overcome them" (Navarro, 1979, p. 10).

(2) The design and testing stage, which includes exploratory experiments, variety trials, and systems management studies, and serves as a basis for developing alternatives and

evaluating more "obvious" changes in the existing farming system. The results of the exploratory experiments provide the basis for designing alternatives that are then tested at the farm level. Depending on the nature of the problem, further work at the experiment station may be necessary (Navarro, 1979).

(3) The validation stage in which promising alternatives, which emerge from the second stage, are compared with the existing system under farm management.

(4) The extension stage in which "successful" technologies are formally extended to farmers, possibly in the context of a development program and involving the extension service (Navarro, 1979).

CATIE has mounted training programs focusing on farming systems research concepts and methods encompassing both "upstream" and "downstream" features.[1]

A2.1.3 Observations

In the course of implementing its work program, CATIE has encountered a number of "problems" or issues which are discussed by Navarro (1979):

(1) The work tends to be very site specific, making it difficult to extrapolate results to other areas. As a regional organization, CATIE is interested in developing methodologies to facilitate such extrapolation. Yet the farming systems may be sufficiently diverse as to defy meaningful or at least operational generalization.

(2) Related to the problem of extrapolation, the existing procedures tend to be more costly and time consuming, especially considering the more or less continuous application of the procedures in all inhabited ecosystems in the region.

[1] A published text used for training, which grew from CATIE research, is Hart (1979c).

Obviously, there will be economies once the initial descriptive data have been collected and experienced teams are in operation in each area.

(3) The site-specific nature of the work and the limitation of time and resources that can be devoted to a particular phase of activity in a specific area often mean that the results, in terms of hard data, may be less "scientific" than desired. The professional staff members involved may feel that they are being forced to compromise the standards of their specific disciplines in the interests of producing results rapidly. Working together as a multidisciplinary team also means that the techniques used by any single discipline must be comprehensible to other team members.

Finally, CATIE staff must depend on staffs of national institutions to carry out much of the work, which may or may not meet its own standards. Most of the CATIE staff is based at headquarters in Costa Rica and often must travel some distance to work sites in other countries. Exploratory trials and farm level tests may suffer as a consequence.

A3. NATIONAL FARMING SYSTEMS PROGRAMS

A3.1 ICTA (INSTITUTO DE CIENCIA Y TECNOLOGIA AGRICOLAS), GUATEMALA, C.A.

ICTA was created as an autonomous agency in Guatemala in 1973 as the main expression of an effort "to correct the deficiencies of the traditional research system, which had not provided sufficient, appropriate technology to increase production of basic grains . . ." (Hildebrand, 1976, p. 1).[1] In general, it was felt that the development of technology was not effectively linked to a systematic identification of the farmers' problems on the one hand and testing and evaluation of possible solutions under actual farming conditions on the other. The lack of operational linkages with on-farm conditions in technology development resulted in low acceptance of new practices by traditional farmers. A specific target group of ICTA was small farmers who form the majority of the population and who generally participated in the national economy only in a peripheral manner (Hildebrand, 1979c).

A3.1.1 Basic orientation

In 1973, ICTA developed an "Agricultural System" for designing and testing technologies for small farmers. Initially, its major components, as described by Hildebrand (1976), included:

(1) Description and analysis of the traditional farmer with an orientation toward an understanding of factors that have prevented his benefiting from modern technology.

(2) Adaptive research to generate new technology appropriate to him.

(3) Farm testing and promotion to assure, early in the process, that the technology being developed is satisfactory from target-group farmers' point of view.

[1] Previously, agricultural research had been the responsibility of the General Services section of the Ministry of Agriculture (Fumagalli and Waugh, 1977).

(4) Evaluation of the technology.

A3.1.2 Program components

Over the years, the Agricultural System has been modified with a view to improving efficiency and effectiveness. The Institute now uses what it calls the sondeo or sounding out method to carry out the initial survey work. By means of an intensive team effort, usually involving five social scientists and five technicians of various disciplines over a six to ten day period, the sondeo method seeks to:

(1) Identify the major farming system in an area and its geographic distribution.

(2) Discover common agro-socio-economic conditions facing farmers in the system.

(3) Provide an orientation for the initial work on designing an appropriate technology for this system through farm trials (Hildebrand, 1979c).

An additional benefit of the method is to acquaint members of the team with farmers in the area, and with each other. It is important that each team member comes to appreciate the activities of all other team members even though they represent different disciplines, and that all think of producing a single product on a team basis, namely, an improved package of practices for farmers in the area who apply the selected system (Hildebrand, 1979c).

The specific activities involved in sondeo include:

(1) Unstructured interviewing of farmers, leaders, etc. by pairs of team members, one social scientist and one agricultural technician.

(2) Discussions involving the entire ten person team between each set of interviews.

(3) Preparation of a single team report, which includes an overview of the principal characteristics of the existing farming system and recommendations for the future work of ICTA in the area (Hildebrand, 1979c).

Given the limited time and the importance placed on group interaction, no effort is made to collect and analyze "hard data" via the

sondeo. However, nearly all the critical information necessary to orient the design and testing activities can be obtained by the sondeo method, especially where some or all team members have previous sondeo experience. More detailed information or "hard data" for evaluation is collected later via farm records. Participating farmers are identified in the course of the sondeo (Hildebrand, 1979b).

Generating new technology suited to the area involves selectively drawing upon available research results from on-going research in ICTA and other institutions, including regional and international centers. Technology development and testing by ICTA technicians includes trial work at three levels:

(1) Controlled trials on the research station and a few farms--carried out by the commodity program and organized along commodity lines.

(2) Replicated technical trials under the direction of the "Technology Testing Team" on many more farms "as a way of extending the exposure of the materials and practices throughout the zone." (Hildebrand, 1978).

(3) Nonreplicated, agro-economic trials, on large plots, of the most promising technologies emerging from the preceding trials (Hildebrand, 1978).

In a fourth level of evaluation, called Farmer's Tests, the farmers become the primary evaluators. Materials or practices that appear appropriate to the technicians from the above screening process are provided to a still larger number of target farmers for their evaluation. The technician provides only supervision and technical assistance. The farmer pays all costs and provides all labor. Farmers' opinions and comparative results are obtained by the technicians while the crop is being produced,[1] but the principal evaluation is made the following crop year. An "acceptability index" measures the farmers' evaluation

---

[1]This preliminary estimate of the farmers' evaluation is used to estimate demand for components, such as improved seed, which must be produced or supplied in increased quantitites the next year.

based on their use of the technology tested the previous year.[1] Obviously, the extensive involvement of farmers in the testing process leaves no clear line between on-the-farm testing and promotion activities.[2]

The activities provide some built-in evaluation procedures, including maintenance of farm records collected by the farmers. Farmers are given sheets on which they are to record information about their farm activities during a particular period. Technicians periodically collect the sheets and review them with the farmers. At the end of the farming season, the data are analyzed and a report is prepared for ICTA. An additional report is prepared for each farmer (Hildebrand, 1979c).

Data generated by the farm records project allow ICTA to evaluate changes in farmer activities over time stemming from the introduction of the new technology. The ultimate test of a technology is the extent to which the practices are incorporated into the farmers' farming systems (Hildebrand, 1976).

A3.1.3 Observations

A number of features of the ICTA experience are of particular interest.

(1) The FSR approach grew from a reorganization of the agricultural research system to serve small farmers more effectively.

(2) ICTA is one of the few programs where farmers participate in keeping farm records. The approach is most effective where a fairly high degree of literacy in the official language prevails but it may require more frequent visits by technicians. Farm records might well provide an effective subject focus for rural literacy programs in areas of low literacy.

(3) The experiences of ICTA illustrate that for all its theoretical advantages, multidisciplinary team work is difficult. ICTA has focused on the need to produce a single product

[1]Hence, this index measures active acceptability as opposed to passive opinions, which may or may not reflect action when cropping decisions are made.

[2]Hildebrand (personal communication).

in the form of a team report and on technology advocated by a multidisciplinary team of scientists.

(4) FSR enhances the role of the social scientist vis-a-vis the technician in the design of technology, as the social scientist is an equal rather than simply an accountant performing simple cost and return calculations. Yet Hildebrand (1978) comments that some technicians at ICTA have found the enlarged role of social scientists difficult to accept.

The experiences of ICTA underline the fact that FSR is unlikely to produce rapid breakthroughs that can serve large regions. Rather, FSR is a continuing process of improving agricultural productivity in an evolutionary fashion area by area.

A3.2 ISRA (INSTITUT SENEGALAIS DE LA RECHERCHE AGRICOLE), DAKAR, SENEGAL

Although most of the publicity about farming systems research in recent years has centered on activities of international agricultural research centers such as IRRI, ICRISAT, and IITA, and selected national programs in Central America and Asia, one of the oldest farming systems research programs in the Third World is in Senegal, in the form of the Unites Experimentales of ISRA.

Historically, agricultural research activities in most of Africa have concentrated on export crops and have been organized along disciplinary and commodity lines. Although this research achieved some successes for export crop producers, it failed to generate food-crop technology for Africa's growing population.

A3.2.1 Basic orientation

The early 1960s were regarded as a particularly poor period for Senegalese agriculture. Although part of the problem stemmed from government marketing and price policies, attention was also directed to the relatively poor performance of the extension effort in introducing "improved technologies." Questions were raised about the validity of the innovations and the effectiveness of the crop-by-crop focus of extension efforts. It was recognized that the transformation of

agriculture might require modifications in farm organization in addition to making new techniques available (ISRA, 1977).

The primary goal of the Unites Experimentales is land improvement to intensify agricultural production through practices designed to improve production and farmer incomes while preserving and improving land or soil (the basic resource). However, recommended practices must not be simply technically "correct," but also acceptable to farmers. Thus the design of improved systems or practices must take into account the existing systems of production and the constraints facing farmers. Finally, the packages of recommended practices must be proved through tests under farm conditions before being formally incorporated in large scale schemes. It is basically a "downstream" program (ISRA, 1977).

A3.2.2 Program components

The work of the Unites Experimentales consists of two major activities: creation and diffusion. Creation of new technologies involves three stages:

(1) Analytical studies including traditional studies of plants, soils, and the various technical factors of production, along with socioeconomic studies of existing farming and marketing systems.

(2) Experimentation with simple combinations of factors and establishing reference norms for fertilizer, equipment, etc., that could be used in defining simple combinations of crops, equipment, and factor combinations for each zone and ecological sub-region.

(3) Synthesis of research on existing and possible improved systems and elaboration of proposed farming systems specifically designed for each ecological zone.

Stages (1) and (2) are generally carried out by researchers of different disciplines working separately. Synthesis of existing and improved systems involves interdisciplinary teams (ISRA, 1977). The diffusion activities include testing the proposed system under farm conditions, initially under the direction of researchers and involving

a few receptive farmers. Later, during the demonstration and pre-extension phases of testing, the trials are managed by many farmers on a large scale. Finally, techniques or sets of practices that successfully pass through the above sequence are transferred to farmers by the extension system (ISRA, 1977).

A3.2.3 Observations

Three features of the Unites Experimentales approach to farming systems research deserve special mention:

(1) The idea that a true understanding of the dynamics of the existing farming system can only be obtained when the system is confronted with technical change. The experimental method in essence consists of introducing to farmers an improved technological package that permits monitoring how effective it is in transcending the constraints (Elliott, 1977).

(2) Researchers first use the more receptive farmers for initial trials to ensure close cooperation and the most favorable test of the proposed package's feasibility, instead of testing the package with a group that is representative of the target population (Elliott, 1977). Such selection of farmers, besides facilitating the researcher s job, uses farmers who are representative of the farmers of tomorrow. Subsequent trials involve many more farmers.[1]

(3) The innovations are proposed as a package that farmers are encouraged to accept in total. Based on an inventory of farmers' resources and knowledge, the farmers are divided initially into three groups--those for whom a maximum package is appropriate, those for whom the minimum package is appropriate, and those for whom neither package is appropriate. In practice, farmers tend to ignore the interrelationships and adopt only the specific practices that appear to best suit their individual needs, particularly so with soil

[1]Faye (personal communication).

conservation measures. Because results of the work of Unites Experimentales have yet to be adopted on a large scale by farmers, it is too soon to expect major progress. Until recently the work of the Unites Experimentales was confined to a limited area, but an extension of FSR-type activities to other parts is understood to be in progress.

A3.2.4 Reorganization of ISRA

Recently, the Government of Senegal with the assistance of the International Agricultural Development Service (IADS), a U.S. based agency funded by the Rockefeller Foundation, and the World Bank completed an extensive review of agricultural research in Senegal. The IADS/Bank report recommended that the existing agricultural research system be expanded and improved through development of a six year decentralized research program designed to achieve the following objectives:

1) Strengthen national research capabilities through developing a more efficient organization and supporting services for ISRA headquarters and providing operating costs for the national research program.
2) Create and support six national multidisciplinary teams conducting research on the basic food crops (millet, sorghum, maize, rice, cowpeas, vegetables and groundnuts) and on new production systems being developed for irrigated agriculture.
3) Expand, improve and support four farming system research programs: 1) Fanaye for the Senegal River Valley, 2) Bambey for the Central Groundnut Basin, 3) Kaolack for the Southern Groundnut Basin and 4) Djibelor for the Casamance Region.
4) Expand, improve and support two livestock systems research programs at Dahra and Kolda.
5) Assist in staffing and financing the Economics and Sociology Department at ISRA headquarters and in providing economists and sociologists for the five farming systems teams.

6) Provide overseas post-graduate training for Senegalese research workers.

Execution of the decentralized research program proposed by the IADS/Bank reports will be the responsibility of ISRA, with the responsibility for research management lying with each appropriate department head in ISRA headquarters and with the coordinator of each of the multidisciplinary items.

A3.3 ICA (INSTITUTO COLOMBIANO AGROPECUARIO) BOGOTA, COLOMBIA: THE CAQUEZA RURAL DEVELOPMENT PROGRAM

A3.3.1 Basic orientation

Although a FSR-type approach is associated with a broad range of ICA research programs today, the origins of these activities can be traced to the Caqueza Rural Development Program. The close association between the FSR activities and a development project is in many respects unique among FSR-type programs. The integration of research activities and action programs was designed to facilitate orientation of the former toward the needs of small farmers in the project area and to enhance the effectiveness of the action programs (Zandstra, Swanberg, et al., 1979).

The Caqueza project was one of several integrated rural development projects initiated in Colombia in the early 1970s. Previously, research and development efforts had been heavily oriented toward large scale commercial agriculture, and experimentation was undertaken primarily on research stations or large farms and focused on adapting modern, high-input technologies for monocultures. ICA, with assistance from the International Development Research Center of Canada, initiated a substantial on-farm research program among small farmers in the Caqueza project with the following objectives (Zandstra, Swanberg, et al., 1979, p. 9):

(1) Develop and prove a strategy to transfer technical, economic, and social knowledge to small farmers that would promote their active participation in such matters as use of credit and purchased inputs, sale of their products, and better social conditions.

(2) Use this strategy to bring about higher crop and animal yields, improved economic returns, and better family living in the project area.

(3) Establish a system whereby farmers of the project area assumed increasing responsibility for executing and expanding the introduced strategy by their own initiative.

(4) Measure changes in the community, including income, that resulted from the project.

A3.3.2 Program components

The Caqueza project encompassed the entire range of activities from adaptive research through extension. In addition, various support activities such as credit, marketing, and input delivery were provided by institutions involved in the project. The important feature is the evolutionary process that produced the FSR-type approach to developing, designing, testing, and promoting improved practices.

The extension and promotion activities were initiated as the project began in 1971. Farmers were mobilized and extension demonstrations were laid out based on available recommendations for the crops grown in the area. Baseline studies were undertaken to determine the technical, social, and economic features of the existing farming systems. After one season, it was realized that many of the recommendations were not suitable for the area. In general, the farming systems involved a complex of intercropping arrangements, while the recommendations were sole-crop oriented.

Agronomic trials were used the next season with the objective of modifying recommendations for local conditions. A series of special studies undertaken on the adaptive behavior of farmers suggested that the cost of credit and its low availability was a major constraint to expanding production. Unreliable prices and marketing arrangements also were identified as problems.

Attention turned to ways to improve credit availability and marketing arrangements, but those measures failed to improve adoption rates significantly. Research then was intensified on adaptive behavior of farmers and extension activities were continued. Agronomic

trials off farmers fields were curtailed as the technical elements of the recommendations had been suitably modified, but on-farm trials and demonstrations continued.

The studies and experience of the project revealed that a major barrier to adoption was that cash losses under recommended practices would be significantly increased by a total or partial crop failure. To deal with the risk element, the project offered participating farmers purchased inputs on credit. Farmers in turn would agree to repay to the bank half of the production of the specific crop in excess of specified minimum yields. Thus the risk of additional losses to a farmer from crop failure associated with using improved practices was shared with the credit agency. Although a number of farmers participated in that plan, they tended to put poorer lands under the scheme and to divert a portion of the output so as to avoid repayments to the credit agency (Zandstra, Swanberg, et al., 1979).

A3.3.3 Observations

While the Caqueza project still has to prove itself in the sense of facilitating a significant improvement in livelihoods of large numbers of farming families in the region, the experiences of the project have demonstrated the desirability and feasibility of the FSR approach as an integral part of development projects--to identify constraints to expanded agricultural production and to design and test improvements that address the constraints. The sequence of activities in Caqueza ideally might have involved identifying the appropriate strategy, including the improved practices and required supporting services like credit and marketing facilities, before initiating the promotion program. The experience also illustrated the need for a reorientation of agricultural research to focus more on the realities of existing farming systems of small holders. Since the initiation of the project, research activities of ICA have been reorganized along commodity and regional lines to serve development projects, and discipline oriented research has been reduced.

Although the initial focus of the adaptive research in the Caqueza project was on the technical package, attention soon shifted to

nontechnical factors--notably credit and marketing--in response to low adoption rates and results of research on the existing farming systems. In constrast to other FSR-type programs, which focus on the technical side, efforts were made to design and activate improvements that addressed nontechnical problem areas. That required linkages with credit and planning agencies which had responsibilities in these areas.

B. FARM MANAGEMENT RESEARCH

Many features of FSR are reminiscent of farm management research as it was practiced during the early part of the century (Hodges, Elliot and Grimes, 1930). In constrast to the current farm management investigations, which have become the realm of economists, farm management initially was multidisciplinary and looked at the entire range of factors involved in running a farming enterprise. The subjects covered in Warren's classic text on farm management include farm accounts, soil types, an array of agronomic considerations, and discussions on conventional production factors--land, labor, and capital (Warren, 1913). The range of concerns also encompassed political developments relevant to farming and philosophical concerns--such as those found in a section of Warren's text titled "Some Thoughts for the Farm Boy" (Warren, 1913).

Early leadership in farm management research came from persons trained in the physical sciences. An article in 1902 emphasized the interrelationships among farm enterprises and viewed farm management as a merging of the principles of agriculture and economics (Spillman, 1902). However, it was nearly a decade before this view prevailed and it was in the 1920s before the balance began to move strongly in the direction of economic analysis (Case and Williams, 1957). This trend, however, continued to such an extent that eventually farm management was removed from departments of Agronomy, in which it was originally located, to departments of Agricultural Economics. More recently farm management, as it was originally conceived, has received less publicity and is often undertaken by individuals in extension positions, implementation agencies such as TVA, etc. (Clapp, 1955; McKnight, 1959; State of California, 1977). Instead--unfortunately perhaps in the light of current interest in FSR--the mainstream of farm management has become increasingly identified with production economics, and has placed greater emphasis on what farmers ought to do through use of techniques such as budgeting, program planning, etc.

Despite important similarities between FSR and the early forms of farm management research, differences are apparent in the treatment of motivations and the flexibility of recommendations emerging from

the analysis of existing farming systems. Farm management research assumed that successful farmers had to be thrifty, hardworking, profit maximizers. They would prosper, expand, and should be emulated. As late as 1947, farm management was being defined as "the act of judiciously and skillfully managing a farm" (Boss and Pond, 1947). Further, much of the farm management literature tended to be proscriptive in nature, indicating what farmers should do to be successful, rather than trying to understand the logic of the farming practices that the mass of farmers were using. Model farms were an important element in both farm management research and promotion activities during the first two decades of the century (Case and Williams, 1957).

While a detailed discussion of farm management research is beyond the scope of this review of FSR, we view farm management research, especially in its early manifestations, as an important antecedent of FSR. To an important extent, the rise in interest in FSR as a means of improving the effectiveness of agricultural development efforts in the Third World is in response to limitations of the traditional disciplinary approach that succeeded farm management research in the U.S. and in most research institutes in the Third World. Thus, in a sense, the wheel has come a full circle.

SELECTED BIBLIOGRAPHY[1]

Anderson, K. 1979. Public Agricultural Research Investment in Developing Countries: A Political-Economic Theory. Paper presented at The Conference of the International Association of Agricultural Economists, September 1979, Banff, Canada.

Angus, J.F., and Zandstra, H.G. 1979. Climatic Factors and the Modeling of Rice Growth and Yield. Paper presented at the WHO/IRRI Symposium/Planning Meeting on the Agrometeorology of the Rice Crop, 3-7 December 1979, Los Banos, Philippines.

Asian Cropping Systems Working Group. 1979. Network Methodology and Cropping System Research in Indonesia. Bogor, Indonesia: Central Institute for Agriculture.

Bandong, J.P.; Estorninos, L.E.; Gines, H.; Torralba, R.; Manzon, J.; Godilano, E.; Litsinger, J.A.; Moody, K.; Zandstra, H.G.; Carangal, V.R.; Lohani, S.N.; and Tinsley, R.L. 1977. Determining the Appropriate Component Technology for more Productive Cropping Patterns in Pangasinan, 1976-77. Los Banos: IRRI. (Mimeographed).

Bartlett, C.D.S., and Ikeorgu, J.E. 1979. Selecting Innovations for Small Farmers. Paper presented at Conference on Rapid Rural Appraisal, 4-7 December, 1979, I.D.S., University of Sussex, Brighton, U.K.

Beeden, P.; Hayward, J.A.; and Norman, D.W. 1976. A Comparative Evaluation of Ultra-Low Volume Insecticide Application on Cotton Farms in the North Central State of Nigeria. Nigerian Journal of Plant Protection 2(1): 25-29.

Beeden, P.; Norman, D.W.; Kroeker, W.J.; Pryor, D.H.; Hays, H.M.; and Huizinga, B. 1976. The Feasibility of Improved Sole Crop Cotton Technology for the Small-Scale Farmer in the Northern Guinea Savanna Zone of Nigeria. Samaru Miscellaneous Paper No. 61. Zaria, Nigeria: Ahmadu Bello University.

Belshaw, D.G.R., and Hall, M. 1972. The Analysis and Use of Agricultural Experimental Data in Tropical Africa. East African Journal of Rural Development 5 (1/2): 39-71.

Benoit-Cattin, M. 1977. Analyse Economique Plan-Annuelle d'un Groupe de Carres Suivis-Unites Experimentales 1969-75--Methodes et Principaux Resultats. L'Agronomie Tropicale 32(4): 413-426.

Benor, D., and Harrison, J.Q. 1977. Agricultural Extension. Washington, D.C.: IBRD.

---

[1]The list contains some references not cited in the text.

Bernsten, R. 1979. Design and Management of Survey Research: a Guide for Agricultural Researchers. Bogor, Indonesia: CRIA/IRRI Cooperative Program (Mimeographed).

Biggs, S.D. 1978. Planning Rural Strategies in the Context of Social Structures and Reward Systems. Journal of Agricultural Economics 29(3): 257-278.

Binswanger, H.P. 1978. The Economics of Tractors in South Asia: An Analytical Review. New York: Singapore University Press, ADC/ICRISAT.

Binswanger, H.P., and Ryan, J.G. 1977. Efficiency and Equity Issues in Ex-Ante Allocation of Research Resources. Indian Journal of Agricultural Economics 32(3): 217-231.

_____. 1979. Studies as a Locus for Research and Technology Adaption. Paper presented at International Symposium on Development and Transfer of Technology for Rainfed Agriculture and the SAT Farmer, August 1979. Hyderabad: ICRISAT.

Boer, A.J. de, and Welsch, D.F. 1977. Constraints on Cattle and Buffalo Production in a Northeastern Thai Village. In Tradition and Dynamics in Small Farm Agriculture. Edited by R.D. Stevens. Ames: Iowa State University.

Boss, A., and Pord. G.A. 1947. Modern Farm Management. St. Paul: Webb Publishing Company.

Brockington, N.R. 1979. Computer Modelling in Agriculture. New York: Clarendon Press.

Bunting, H.A. 1979. Science and Technology for Human Needs, Rural Development and the Relief of Poverty. IADS Occasional Paper. New York: IADS.

Byerlee, D.; Biggs, S.; Collinson, M.; Harrington, L.; Martinez, J.C.; Moscardi, E.; and Winkelmann, D. 1979. On-Farm Research to Develop Technologies Appropriate to Farmers. Paper presented at The Conference of the International Association of Agricultural Economists, September 1979, Banff, Canada.

Case, H.C.M., and Williams, D.B, 1957. Fifty Years of Farm Management. Urbana: University of Illinois Press.

Castle, E.M. 1977. A Framework for Rural Development. Culture and Agriculture 3: 1-8.

Cernea, M.M., and Tepping, B.J. 1977. A System for Monitoring and Evaluating Agricultural Extension Projects. World Bank Staff Working Paper No. 272. Washington: World Bank.

Chambers, R. 1980. Shortcut Methods in Information Gathering for Rural Development Projects. Paper presented at World Bank Agricultural Sector Symposium, January 1980, IDS, University of Sussex, Brighton, U.K.

CIAT. 1978. Beef Program. 1978 Report. Cali, Colombia: CIAT.

CIMMYT. 1976. CIMMYT Review. Londres, Mexico: CIMMYT.

_____. 1977. Demonstrations of an Interdisciplinary Farming Systems Approach to Planning Adaptive Agricultural Research Programmes. Research Report No. 1. Nairobi: CIMMYT.

_____. 1979. Demonstrations of an Interdisciplinary Approach to Planning Adaptive Agricultural Research Programmes. Deriving Recommendation Domains for Central Province, Zambia. Research Report No. 4. Nairobi: CIMMYT and Ministry of Agriculture and Water Development, Government of Zambia.

_____. 1979. Objectives, Content and Methods of Special Course for Economists. Londres, Mexico: CIMMYT.

_____. 1980. Planning Technologies Appropriate to Farmers; Concepts and Procedures. Londres, Mexico: CIMMYT. (Forthcoming).

Clapp, G.R. 1955. The TVA: an Approach to the Development of a Region. Chicago: Russell.

Collinson, M.P. 1972. Farm Management in Peasant Agriculture: A Handbook for Rural Development Planning in Africa. New York: Praeger.

_____. 1979a. Micro-Level Accomplishments and Challenges for the Less-Developed World. Paper presented at The Conference of the International Association of Agricultural Economists, September 1979, Banff, Canada.

_____. 1979b. Understanding Small Farmers. Paper given at Conference On Rapid Rural Appraisal, 4-7 December 1979, IDS, University of Sussex, Brighton, U.K.

Conklin, S. 1979. Baseline Surveys: An Escape From Thinking About Research Problems Even More, a Refuge From Actually Doing Anything. Paper presented at Conference on Rapid Rural Appraisal Brighton, 4-7 December 1979, IDS, University of Sussex, Brighton, U.K.

Cox, M.L. 1979. A Simplified Approach to Agricultural Systems. IADS Occasional Paper. New York: IADS.

Crawford, E.W. 1980. Understanding Quantification and Modelling in Farming Systems Research: Results of a Simulation Study in Northern Nigeria. Agricultural Economics Staff Paper No. 80-19. East Lansing: Department of Agricultural Economics, Michigan State University.

DeWalt, B.R. 1979. Alternative Adaptive Strategies in a Mexican Ejido: a New Perspective on Modernization and Development. Human Organization 38(2): 134-143.

Dillon, J.L. 1976. The Economics of Systems Research. Agricultural Systems 1(1):3-20.

Elliott, H. 1977. Farming Systems Research in Francophone Africa; Methods and Results. Paper presented at The Middle East and Africa Agricultural Seminar of the Ford Foundation, 1-3 February 1977, Tunis, Tunisia.

Faye, J., and Niang, M. 1977. An Experiment in Agrarian Restructuration and Senegalese Rural Space Planning. African Environment 2(4) and 3(1): 143-153.

Flinn, J.C. 1980. Analysis of Broader Consequences for Society. Paper presented at Workshop on Methodological Issues Facing Social Scientists in Applied Crop and Farming Systems Research, 1-3 April 1980, CIMMYT, Londres, Mexico.

Francis, C.A., and Sanders, J.H. 1978. Economic Analysis of Bean and Maize Systems: Monoculture Versus Associated Cropping. Field Crops Research 1:319-335.

Fumagalli, A., and Waugh, R. 1977. Agricultural Research in Guatemala. Guatemala City: ICTA

Gerhart, J. 1975. The Diffusion of Hybrid Maize in Western Kenya. Londres, Mexico: CIMMYT

Gotsch, C.H. 1977. The Concept of Farming Systems in the Analysis of Agricultural Research and Development Programs. Paper presented at The Middle East and Africa Agricultural Seminar of the Ford Foundation, 1-3 February 1977, Tunis, Tunisia.

Gupta, R., n.d. Management of Rural Development: Lessons from Dharampur. Vastrapur: Indian Institute of Management. (Mimeographed)

Hardaker, J.B. 1979. A Review of Some Farm Management Research Methods for Small-Farm Development in LDC's. Journal of Agricultural Economics 30 (Sept):315-331.

Hardin, L.D. 1977. Discussion: Social Science and Related Implications. American Journal of Agricultural Economics 59 (5): 853-854.

Harrington, L.W. 1980. Farmer Assessment of Maize Recommendations in Northern Veracruz State, Mexico. Unpublished Ph.D. Dissertation. East Lansing: Michigan State University.

Hart, R.D. 1979a. An Ecological Systems Conceptual Framework for Agricultural Research and Development. Paper presented at Seminar on Agricultural Production Systems Research (Iowa State University, CATIE and IICA), February 1979, Turrialba, Costa Rica.

____ 1979b. One Farm System in Honduras: A Case Study in Farm Systems Research. Paper presented at Farming Systems Research and Development Workshop, 2-4 August 1979, Consortium for International Development, Fort Collins, Colorado.

_____. 1979c. Agroecosistemas: Conceptos Basicos. Turrialba, Costa Rica: CATIE.

Harwood, R.R. 1979a. Farming Systems Development in a Resource-Limiting Environment. Paper presented at Farming Systems Research and Development Workshop, 2-4 August 1979, Consortium for International Development, Fort Collins, Colorado.

_____. 1979b. Small Farm Development: Understanding and Improving Farming Systems in the Humid Tropics. Boulder: Westview Press.

Hardwood, R.R., and Price, E.C. 1976. Multiple Cropping in Tropical Asia. In Multiple Cropping, Special Publication No. 27. Madison: Agronomy Society of America.

Hatch, J. 1980. A Record-Keeping System for Rural Households. Ann Arbor: Rural Development Services. (Mimeographed).

Heady, E.O. 1973. Allocation of Colleges and Economists. American Journal of Agricultural Economics 54(5):934-944.

Hightower, J. 1972. Hard Tomatoes, Hard Times: The Failure of the Land Grant College Complex. Washington, D.C.: Agribusiness Accountability Project.

Hildebrand, P.E. 1976. Generating Technology for Traditional Farmers: A Multidisciplinary Methodology. Guatemala City: ICTA.

_____. 1977. Generating Small Farm Technology: an Integrated Multidisciplinary System. Paper presented at the Twelfth West Indian Agricultural Economics Conference, 24-30 April 1977, Antigua.

_____. 1978. Motivating small farmers to accept change. Paper presented at Conference on Integrated Crop and Animal Production to Optimize Resource Utilization on Small Farms in Developing Countries, 18-23 October 1978, Bellagio, Italy.

_____. 1979a. Summary of the Sondeo Methodology Used by ICTA. Guatemala City: Instituto de Ciencia y Techologia Agricolas. (Mimeographed).

_____. 1979b. The ICTA Farm Record Project with Small Farmers--Four Years of Experience. Guatemala City: Instituto de Cienca y Tecnologia Agricolas. (Mimeographed).

_____, 1979c. Generating Technology for Traditional Farmers - The Guatemalan Experience. Paper presented at International Congress of Plant Protection, 5-11 August 1979, Washington, D.C.

Hodges, J.A.; Elliott, E.F.; and Grimes, W.E. 1930. Types of Farming in Kansas. Agricultural Experiment Station Bulletin No. 251. Manhattan: Agricultural Experiment Station, Kansas State University.

Holdcroft, L.E. 1978. The Rise and Fall of Community Development in Developing Countries, 1950-65. MSU Rural Development Paper No. 2. East Lansing: Department of Agricultural Economics, Michigan State University.

Holtman, J.B.; Connor. L.J.; Lucas, R.E.; and Wolak, F.J. 1977. Material-Energy Requirements and Production Costs for Alternate Dairy Farming Systems. Research Report No. 332. East Lansing: Agricultural Experiment Station, Michigan State University.

ICARDA. 1978. Report on Research Progress and Developments at ICARDA, 1977-78. Aleppo, Syria: ICARDA.

ICRISAT. 1975. Annual Report 1974-75. Hyderabad, India: ICRISAT.

_____. 1977. Economics Program. Annual Report 1976-77. Hyderabad, India: ICRISAT.

IITA. 1979a. Annual Report for 1978. Ibadan, Nigeria: IITA.

_____. 1979b. Research and Training Activities at IITA. Ibadan, Nigeria: IITA.

Institut d'Economie Rurale. 1977. Rapport de Synthese sur les Systemes de Culture et d'Elevage dans le Contexte de Mali. Bamako, Mali: Institut d'Economie Rurale.

IRRI. 1976. Research Highlights for 1975. Los Banos, Philippines: IRRI.

_____. 1977. Constraints to High Yields on Asian Rice Farms: An Interim Report. Los Banos: IRRI.

_____. 1978. Cropping Systems Research Highlights. Los Banos, IRRI. (Mimeographed).

_____. 1979. Farm-Level Constraints to High Rice Yields in Asia: 1976-77. Los Banos: IRRI.

ISRA. 1977. Recherche et Developpement Agricole: les Unites Experimentales du Senegal. Dakar, Senegal: ISRA.

Jodha, N.S. 1977. Production Patterns and Dynamics of Resource Use in Arid and Semi-Arid Tropical India. Paper presented at CILSS Seminar, 22 February-1 March 1977, Bamako, Mali.

Jodha, N.S.; Asokan, M.; and Ryan, J.G. 1977. Village Study Methodology and Resource Endowments of the Selected Villages in ICRISAT's Village Level Studies. Occasional Paper No. 16, Hyderabad, India: ICRISAT.

Johnson, A.W. 1972. Individuality and Experimentation in Traditional Agriculture. Human Ecology 1: 149-159.

Johnson, G. 1957. Agricultural Economics: Production Economics and the Field of Farm Management. Journal of Farm Economics 39(2): 441-450.

Jolly, A.L. 1952. Unit Farms. Tropical Agriculture, Trinidad 29: 172-179.

Kampen, J. 1979a. Farming Systems Research and Technology for the Semi-Arid Tropics. Paper presented at the International Symposium on Development and Transfer of Technology for Rainfed Agriculture and the SAT Farmer, August 1979, ICRISAT, Hyderabad, India.

_____. 1979b. Watershed Management and Technology Transfer in the Semi-Arid Tropics. Paper presented at the International Symposium on Development and Transfer of Technology for Rainfed Agriculture and the SAT farmer, August 1979, ICRISAT, Hyderabad, India.

Khan, H.D. 1979. Ten Decades of Rural Development: Lessons from India. MSU Rural Development Paper No. 1. East Lansing: Department of Agricultural Economics, Michigan State University.

Kleene, P. 1976. Notion d' Exploitation Agricole et Modernization en Milieu Wolof Soloum. L'Agronomie Tropicale 31 (1):63-82.

Krantz, B.A. 1979. Farming Systems Research at ICRISAT. Paper presented at Farming Systems Research and Development Workshop, 2-4 August 1979, Consortium for International Development, Fort Collins, Colorado.

Lawani, S.M.; Alluri, F.M.; and Adimorah, E.N. 1979. Farming Systems in Africa: a Working Bibliography, 1930-78. Boston: E.K. Hall.

Lele, U. 1975. The Design of Rural Development: Lessons from Africa. Baltimore: Johns Hopkins.

Lipton, M.A., and Moore, M. 1972. The Methodology of Village Studies in Less Developed Countries. IDS Discussion Paper No. 10. Brighton: Institute of Development Studies, University of Sussex.

Longhurst, R.; Palmer-Jones, R.W.; and Norman, D.W. 1976. Problems of Determining Relevant Research Priorities for Agricultural Development in the Developing World: The Role to be Played by the Social Scientist. Zaria, Nigeria: Institute for Agricultural Research, Ahmadu Bello University (Mimeographed).

McDowell, R.E. and Hildebrand, P.E. 1980. Integrated Crop and Animal Production: Making the Most of Resources Available to Small Farms in Developing Countries. Rockefeller Foundation Working Paper. New York: Rockefeller Foundation.

McKnight, R.P. 1959. Program and Work of the Test and Demonstration Branch. Paper presented at Conference for Cooperators in the TVA Agricultural Economics Research Activities, March 1959, TVA, Knoxville, Tennessee.

McMennamy, J.A., and Zandstra, H.G. 1979. Farm Machinery for Improved Rice-Based Cropping Systems. Paper presented at IXth International Congress of Agricultural Engineering, 8-13 July 1979, Michigan State University, East Lansing, Michigan.

Menz, K.M. 1979. Unit Farms and Farming Systems Research: The IITA Experience. Discussion Paper No. 3/79. Ibadan, Nigeria: International Institute of Tropical Agriculture.

Menz, K.M., and Knipscheer, H.C. 1979. Role of Agricultural Economics in Farming Systems Research at IITA. Ibadan: IITA (Mimeographed).

Monyo, J.H.; Ker, A.D.R.; and Campbell, M., eds. 1976. Intercropping in Semi-Arid Areas. Ottawa, Canada: International Development Research Center.

Moreno, R.L., and Saunders, J.J. 1978. A Farming System Research Approach for Small Farms of Central America. Turrialba, Costa Rica: CATIE.

Morris, R.A., and Rumbaoa, F.M., Jr. 1979. Rainfall Recurrence Analysis for Extrapolating Rice-Based Cropping Patterns. Paper presented at the WHO/IRRI Symposium/Planning Meeting on the Agrometeorology of the Rice Crop, 3-7 December 1979, Philippines.

Morris, R.A., and Zandstra, H.G. 1979. Soil and Climatic Determinants in Relation to Cropping Patterns. In Rainfed Lowland Rice. Edited by IRRI. Los Banos: International Rice Research Institute.

Moseman, A.H. 1970. Building Agricultural Research Systems in Developing Nations. New York: Agricultural Development Council.

Nair, K. 1961. Blossoms in the Dust. New York: Praeger.

_____. 1979. In Defense of the Irrational Peasant. Chicago: University of Chicago Press.

Navarro, L.A. 1977. Dealing with Risk and Uncertainty in Crop Production: a Lesson from Small Farmers. Paper presented at the Joint AAEA-WAEA Meeting, 31 July-3 August 1977, San Diego. Calif.

_____. 1979. CATIE's Development-Orientated Agricultural Research Effort in the Central American Isthmus. Seminar given at University of British Columbia, September 1979, Vancouver, Canada.

Newman, M.; Ouedraogo, I.; and Norman, D.W. 1980. Farm Level Studies in the Semi-Arid Tropics of West Africa, Hyderabad, India: ICRISAT. (Forthcoming).

Norman, D.W. 1973. Interdisciplinary Research on Rural Development: the RERU Experience. OLC Paper No. 4. Washington: Overseas Liason Committee, American Council of Education.

_____. 1974. The Rationalisation of a Crop Mixture Strategy Adopted by Farmers Under Indigenous Conditions: The Example of Northern Nigeria. Journal of Development Studies 11: 3-21.

_____. 1976. The Social Scientist in Farming Systems Research, Paper presented at Workshop on Farming Systems Research in Mali, November 1976, Institut d' Economie Ruralc, Bamako, Mali.

_____. 1977. Problems Associated with the Gathering of Technical, Economic, and Social Data on the Farm Level in West Africa. Paper presented at the International Conference on the Economic Development of Sahelian Countires, 13-14 October 1977, Centre de Recherche en Developpement Economique, Universite de Montreal, Canada.

_____. 1978. Farming Systems Research to Improve the Livehood of Small Farmers. American Journal of Agricultural Economics 60(5): 813-818.

_____. 1980. The Farming Systems Approach: Relevancy for the Small Farmer. MSU Rural Development Paper No. 5. East Lansing: Department of Agricultural Economics, Michigan State University.

Norman, D.W., and Palmer-Jones, R.W. 1977. Economic Methodology for Assessing Cropping Systems. In Cropping Systems Research and Development for the Asian Rice Farmer. Edited by IRRI. Los Banos, Philippines: International Rice Research Institute.

Norman, D.W.; Pryor, D.H.; and Gibbs, C.J.N. 1979. Technical Change and the Small Farmer in Hausaland, Northern Nigeria. African Rural Economy Paper No. 21. East Lansing: Department of Agriculture and Economics, Michigan State University.

Okigbo, B.N. 1979. Cropping Systems in the Humid Tropics of West Africa and Their Improvement. Paper presented at the IITA Research Review, 1979, ITTA, Ibadan, Nigeria.

Perrin, R.K.; Winkelman, D.L.; Moscardi, E.R.; and Anderson, J.R. 1976. From Agronomic Data to Farmer Recommendations: An Economics Training Manual. Information Training Bulletin No. 27. Londres, Mexico: CIMMYT.

Poleman, T.T., and Freebairn, D.K., eds. 1973. Food, Population and Employment. New York: Praeger.

Remenyi, J.V. 1977. Issues in Farming Systems Research. A Report on the Ford Foundation Staff Seminar, 1-3 February 1977, Tunis, Tunisia.

Ruthenberg, H. 1971. Farming Systems in the Tropics. Oxford: Clarendon Press.

Ryan, J.G., and Binswanger, H.P. 1979. Socio-Economic Constraints in the Semi-Arid Tropics and ICRISAT's Approach. Paper presented at International Symposium on Development and Transfer of Technology for Rainfed Agriculture and the SAT Farmer, August 1979, Hyderabad ICRISAT.

Ryan, J.G.; Ghodake, R.D.; and Savin, R. 1979. Labor Use and Labor Markets in Semi-Arid Tropical Rural Villages of Peninsular India. Journal Paper No. 62. Hyderabad, India: ICRISAT.

Ryan, J.G., and Subrahmanyan, K.V. 1975. An Appraisal of the Package of Practices Approach in Adoption of Modern Varieties. Occasional Paper No. 11. Hyderabad, India: ICRISAT.

Saint, W.S., and Coward, E.W. 1977. Agriculture and Behavioral Science: Emerging Orientations. Science (197): 733-737.

Sanders, J., and Lynam, J.K., n.d. New Agricultural Technology and Small Farmers in Latin America. Cali, Colombia: CIAT.

_____. 1980. Economic Analysis of New Technology in the Bean and Cassava Farm Trials of CIAT. Cali, Colombia: CIAT.

Sanders, J., and Schwartz, H.F. 1980. Defining Research Priorities in the CIAT Bean Program: Do the Farm Surveys Help? Calif, Colombia: CI

Secretaria de Recursos Naturales. 1978. Agricultural Research in Honduras. Tegucigalpa D.C., Honduras: Secretaria de Recursos Naturales.

Spedding, C.R.W. 1975. The Biology of Agricultural Systems. London: Academic Press.

Spedding, C.R.W., and Brockington, N.R. 1976. Experimentation in Agricultural Systems. Agricultural Systems 1 (1): 47-56.

Spencer, D.C.S. 1972. Micro-Level Farm Management and Production Economics Research Among Traditional African Farmers: Lessons from Sierra Leone. African Rural Economy Paper No. 14. East Lansing: Department of Agricultural Economics, Michigan State University.

Spillman, W.J. 1902. Systems of Farm Management in the United States United States Yearbook of Agriculture. Washington D.C.: USDA

State of California. 1977. The Family Farm in California: Report of the Small Farm Viability Project. Sacramento: State of California.

Stavis, B. 1978. Agricultural Research and Extension Services in China World Development 6:631-645.

_____. 1979. Agricultural Extension for Small Farmers. MSU Rural Development Working Paper No. 3. East Lansing: Department of Agricultural Economics, Michigan State University.

Swift, J. 1978. Notes on Traditional Knowledge, Modern Knowledge and Rural Development. Paper presented at IDS Workshop on the Use of Indigenous Technical Knowledge in Rural Development, 13-14 April 1978, Brighton, Sussex, U.K.

Technical Advisory Committee. 1978. Farming Systems Research at the International Agricultural Research Centers. Washington; Technical Advisory Committee, Consultative Group on International Agricultural Research.

Thomas, J.W. 1972. Development Institutions, Projects and AID in the Water Development Program of East Pakistan. Cambridge: Development Advisory Service, Harvard University Press. (Mimeographed).

Tourte, R.; Ramond, C.; Monnier, J.; and Pochtier, G. 1970. Application des Resultats de la Recherche a la Definition des Modeles d'Exploration. La Demarche de l' IRAT au Senegal. L'Agronomie Tropicale 24(10-11): 963-972.

Van Schilfgaarde, J. 1977. Discussion: Enhancing Natural Resource Use to Increase World Food Production. American Journal of Agricultural Economics 59(5): 851-852.

Venema, L.B. 1978. The Wolof of Saloum: Social Structure and Rural Development in Senegal. Wageningen, The Netherlands; Centre for Agricultural Publishing and Documentation.

Vincent, W.H. 1977. Farmer's Decision-Making Behavior with Regard to Cropping Systems Research. In Cropping Systems Research and Development for the Asian Rice Farmer. Edited by IRRI. Los Banos Philippines: IRRI.

Warren, G.F. 1913. Farm Management. New York: MacMillan

Waugh, R.K. 1976. ICTA-A Strategy for Agricultural Production Technology. Paper presented at International Seminar on Accelerating National Agricultural and Rural Development, 5-18 September 1976, Reading, England.

Willey, R.W. 1978. Intercropping: its Importance and its Research Needs. Hyderabad: ICRISAT.

Winklemann, D., and Moscardi, E. 1979. Aiming Agricultural Research at the Needs of Farmers. Paper presented at the Seminar on Socio-Economic Aspects of Agricultural Research in Developing Countries, 7-11 May 1979, Santiago, Chile.

Zandstra, H.G. 1978. Institutional Requirements for Multiple Cropping Research. Philippine Journal of Crop Science (Special edition): 17-24.

_____. 1979a. A Cropping Systems Research Methodology for Agricultural Development Projects. Paper presented at Seminar at the World Bank Headquarters, 1 August 1979, Washington D.C.

_____. 1979b. Cropping Systems Research for the Asian Rice Farmer. Agricultural Systems 4:135-153.

_____. 1979c. Experiences of IRRI in "Farm Testing" of Rice Technology. Paper presented at Symposium of Agricultural Research and Education Systems for Development, 3-7 September 1979, ICAR-IFARD, New Dehli, India.

_____. 1979d. Soil Management for Rice-Based Cropping Systems. In Soils and Rice. Edited by IRRI. Los Banos, Philippines: International Rice Research Institute.

Zandstra, H.G.; Angus, J.F.; and Tamisin, M.M. 1979. Climatic Factors in Rice-Based Cropping Systems Research. Paper presented at the WHO/IRRI Symposium/Planning Meeting on the Agrometeorology of the Rice Crop, 3-7 December 1979, Los Banos, Philippines.

Zandstra, H.G.; Swanberg, K.; and Zulberti, C.A. 1976. Removing Constraints to Small Farm Production: The Caqueza Project. (IDRC-058e.) Ottawa: International Development Research Centre.

Zandstra, H.; Swanberg, K.; Zulberti, C.; and Nestel, B. 1979. Caqueza: Living Rural Development. (IDRC-107e.) Ottawa: International Development Research Centre.

LIST OF ACRONYMS

ACSN	- Asian Cropping Systems Network
AICRPDA	- All India Coordinated Research Project for Dryland Agriculture
CATIE	- Centro Agronomico Tropical De Investigacion Y Enseñanza
CIAT	- Centro Internacional De Agricultura Tropical
CSP	- Cropping Systems Program
CIMMYT	- Centro Internacional De Mejoramiento De Maíz Y Trigo
DCI	- Developed Country Institution
FSR	- Farming Systems Research
IAR	- Institute for Agricultural Research, Ahmadu Bello University (Nigeria)
IARC	- International Agricultural Research Center
ICA	- Instituto Columbiano Agropecuario
ICARDA	- International Center for Agricultural Research in the Dry Areas
ICRISAT	- International Crops Research Institute for the Semi-Arid Tropics
ICTA	- Instituto De Ciencia Y Tecnologia Agricolas (Guatemala)
IER	- Institut D'Economie Rurale (Mali)
IITA	- International Institute of Tropical Agriculture
ILCA	- International Livestock Center for Africa
IRRI	- International Rice Research Institute
ISRA	- Institut Senegalais de la Recherche Agricole (Senegal)
LDC	- Less Developed Country
ORD	- Organisme Rurale Du Development (Upper Volta)
SAT	- Semi-Arid Tropics
TVA	- Tennessee Valley Authority
USAID	- United States Agency for International Development

MSU RURAL DEVELOPMENT PAPERS

RDP No. 1 Akhter Hameed Khan, "Ten Decades of Rural Development: Lessons from India," 1978.

RDP No. 2 Lane E. Holdcroft, "The Rise and Fall of Community Development in Developing Countries, 1950-1965: A Critical Analysis and an Annotated Bibliography," 1978.

RDP No. 3* James E. Kocher and Beverly Fleisher, "A Bibliography on Rural Development in Tanzania," 1979.

RDP No. 4 Enyinna Chuta and Carl Liedholm, "Rural Non-Farm Employment: A Review of the State of the Art," 1979.

RDP No. 5+∞ David W. Norman, "The Farming Systems Approach: Relevancy for the Small Farmer," 1980.

RDP No. 6 Elon H. Gilbert, David W. Norman and Fred E. Winch, "Farming Systems Research: A Critical Appraisal," 1980.

MSU RURAL DEVELOPMENT WORKING PAPERS

RDWP No. 1* Benedict Stavis, "Turning Point in China's Agricultural Policy," 1979.

RDWP No. 2* Kathryn M. Kolasa, "The Nutritional Situation in Sierra Leone," 1979.

RDWP No. 3 Benedict Stavis, "Agricultural Extension for Small Farmers," 1979.

RDWP No. 4* Steve Haggblade, Jacques Defay, and Bob Pitman, "Small Manufacturing and Repair Enterprises in Haiti: Survey Results," 1979.

RDWP No. 5 Peter Riley and Michael T. Weber, "Food and Agricultural Marketing in Developing Countries: An Annotated Bibliography of Doctoral Research in the Social Sciences, 1969-79," 1979.

RDWP No. 6 Harold M. Riley and Michael T. Weber, "Marketing in Developing Countries," 1979.

RDWP No. 7 Victor E. Smith, Sarah Lynch, William Whelan, John Strauss and Doyle Baker, "Household Food Consumption in Rural Sierra Leone," 1979.

RDWP No. 8 Omar Davies, Yacob Fisseha and Claremont Kirton, "The Small-Scale Non-Farm Sector in Jamaica..Initial Survey Results," 1980.

Single copies of the MSU Rural Development Papers and MSU Rural Development Working Papers may be obtained free by writing to: MSU Rural Development Program, Department of Agricultural Economics, 206 International Center, Michigan State University, East Lansing, Michigan 48824; U.S.A.

*Out of print.
+Available in French.
∞Available in Spanish.