BIBLIOGRAPHIC DATA SHEET

1. CONTROL NUMBER
PN-AAJ-807

2. SUBJECT CLASSIFICATION (695)
AQ00-0000-G320

3. TITLE AND SUBTITLE (240)
Energy in the food system; Dominican Republic

4. PERSONAL AUTHORS (100)
Daines, Samuel; LeBaron, Allen; Posner, Larry; Hancock, Karl; Buttars, Randle; McGranahan, G.; Mitchell, G.; Mubayi, V.; Stern, R.

5. CORPORATE AUTHORS (101)
Practical Concepts, Inc.; Brookhaven National Laboratory

6. DOCUMENT DATE (110)
1980

7. NUMBER OF PAGES (120)
235p.

8. ARC NUMBER (170)
DR333.79.P895

9. REFERENCE ORGANIZATION (130)
Dominican Republic

10. SUPPLEMENTARY NOTES (500)

11. ABSTRACT (950)

12. DESCRIPTORS (920)
Energy
Food processing
Agricultural production
Food storage
Agricultural technology
Fossil fuels
Dominican Rep.
Energy consumption

13. PROJECT NUMBER (150)

14. CONTRACT NO.(140)
Dominican Republic

15. CONTRACT TYPE (140)

16. TYPE OF DOCUMENT (160)

AID 590-7 (10-79)

DR
33379
P895

ENERGY IN THE FOOD SYSTEM
Dominican Republic

July 1980

Prepared by,

Dr. Samuel Daines, Economics
Dr. Allen LeBaron, Agriculture Economics
Dr. Larry Posner, Economics
Karl Hancock, Agriculture Engineering
Randle Buttars, Agriculture Engineering
Practical Concepts Incorporated
Washington D.C.
And
Socio-Economic Profile
Energy Systems Overview
By
G. McGranahan, G. Mitchell,
V. Mubayi & R. Stern
Brookhaven National Laboratory
Upton, New York

For,
Division of Regional Studies
National Center for Analysis of
Energy Systems
Brookhaven National Laboratory
Upton, New York
And
The Agency for
International Development
Washington D.C.

ENERGY IN THE FOOD SYSTEM

Dominican Republic

Prepared by:

Samuel Daines, Economics
Allen LeBaron, Agriculture Economics
Larry Posner, Economics
Karl Hancock, Agriculture Engineering
Randle Buttars, Agriculture Engineering
PRACTICAL CONCEPTS INCORPORATED
Washington D.C.

And:

G. McGranahan, G. Mitchell, V. Mubayi, & R. Stern
BROOKHAVEN NATIONAL LABORATORY
Upton, New York
(Appendix A and Energy Overview)

Prepared for:
Division of Regional Studies
National Center for Analysis of Energy Systems
BROOKHAVEN NATIONAL LABORATORY
Upton, New York

and

THE AGENCY FOR INTERNATIONAL DEVELOPMENT
Washington D.C.

July, 1980

ACKNOWLEDGMENTS

Acknowledgment is in order for all those who assisted the PCI and BNL teams in the elaboration of this study. Appreciation is expressed to officials in USAID Santo Domingo, the Secretaria del Estado de Agricultura (SEA), the Instituto Dominicano de Tecnologia Industrial (INDOTEC), and the US Bureau of Census. In the US, Barbara Diskin, Dave Malkovsky and Sandra Rowland of the Census Bureau assisted the PCI team in the task of processing these basic data files. In the Dominican Republic Charles Blankstein and Allen Merrill of USAID and Ramon Acosta and Gil Canario of INDOTEC all assisted in the preparation and execution of the PCI surveys. The bulk of the PCI supervised surveys was carried out by the Departamento de Economia Agropecuario (DEA) of SEA. Appreciation is extended to Joaquin Nolasco and David Alvarado as well as the supervisors and interviewers of DEA/SEA for their efforts.

TABLE OF CONTENTS

CONCLUSIONS AND RECOMMENDATIONS xvi

PART I. INTRODUCTION

A. AIMS OF THE STUDY 1
B. SALIENT FEATURES OF METHODOLOGY 1
C. ENERGY SYSTEM OVERVIEW 3

1. Energy Resources and Production 3

a. Commercial Energy Resources 3
b. Noncommercial Energy Resources 4

2. Energy Consumption 5

a. Trends and Characteristics 5
b. Sectoral 6
c. Agriculture 6
d. Industry 6
e. Transportation 8
f. Commercial and Government 8
g. Residential 8
h. Electricity Generation 9

PART II. FOOD SYSTEM OVERVIEW

A. CROP AND LIVESTOCK PRODUCTION 11

1. Food Production Resources 12
2. Product Shares in Agricultural Production 14
3. Technological Patterns of Production 15
4. Monetary Returns to Land Use Patterns 17
5. Distribution of Land by Size of Farm 20
6. Sources of Farm Revenue 21
7. Agricultural Production Trends 22

B. FOOD PROCESSING AND MARKETING 22

1. Food Processing 22
2. Food Marketing System 26

a. Disposition of Agricultural Products at the Farm Level 26
b. Wholesale and Retail Trade in Food Products 27
c. Transportation of Food Products 28

C. FOOD CONSUMPTION AND NUTRITION 28

1. Daily Consumption and Nutritional Requirements 28
2. Contribution of Major Food Products to the Dominican Diet 28
3. Trends in Consumption of Food Products 33

D. FOOD BALANCE: IMPORTS AND EXPORTS 33

PART III. PROFILES OF FOSSIL ENERGY USE IN THE FOOD SYSTEM

A. INTRODUCTION 37

1. Energy Policy Options in the Food System Defined 37
2. Sample Survey Methods for Estimating Energy Input Coefficients 37

B. DIFFERENCES IN FOSSIL ENERGY INPUTS FOR MAJOR AGRICULTURAL PRODUCTS 39

1. Changing the Mix of Agricultural Products Produced 39
2. Farm Level Fossil Energy Input/Output Patterns 40

a. Fossil Energy Inputs Into Major Agriculture Products 40
b. Energy Productivity Ratios 41

i. Physical Input/Output Ratios for Energy Use at the Farm Level 42
ii. Economic Efficiency of Energy Use in Major Products 43
iii. Efficiency of Energy Output in Major Agriculture Products 44

3. Energy Use Patterns in Food Processing, Marketing, Storage and Transportation 46

a. Data and Definitions 46
b. Total Energy Use in Processing, Marketing and Transportation for Major Food Products 47

i. Processing 48
ii. Marketing, Transport and Storage 48

4. Total Fossil Energy Use in the Food System 49

a. Summary of Fossil Energy Use in the Food System by Major Agriculture Product 49
b. Pattern of Total Fossil Energy Use by Major Agriculture Product . . 49

c. Energy Efficiency for Major Food Products in the Total Food System 50

C. ENERGY TECHNOLOGY IN THE FOOD SYSTEM 54

1. Introducing New Energy Technologies 54
2. Energy Use by Energy Type 54

a. Farm Level Energy Use by Type of Energy 54
b. Energy Use by Energy Type in Processing, Transport, Marketing and Storage 55
c. Household Energy Use by Energy Type 55

i. Rural Households 57
ii. Urban Households 58
iii. Total Households 58

3. Energy End Use Devices 58

a. Farm Level Energy End Use Devices 58
b. Energy End Use Devices in Small Scale Processing and Marketing . . 60
c. Energy End Use Devices in Households 61

D. TECHNOLOGY FACTORS AND ENERGY USAGE IN FARM LEVEL AGRICULTURAL PRODUCTION OF MAJOR FOOD PRODUCTS 61

1. Shifting the Level of Reliance Among Existing DR Agricultural Technologies 61
2. Rice 62

a. Composite Technology Groups 62
b. Farm Size and Energy Use 64
c. Regional Production Technologies 64
d. Chemical Intensity 65
e. Mechanization and Energy Use 66

3. Beans 66

a. Composite Technology Levels 67
b. Farm Size and Energy Use 67
c. Regional Production Technologies 68
d. Cropping System 69
e. Irrigation 69
f. Chemical Intensity and Mechanization 69

4. Corn 70

a. Composite Technology Levels 70
b. Farm Size and Energy Use 71
c. Regional Production Technologies 72

d. Cropping System 72
e. Chemical Intensity and Mechanization 72

5. Cassava (Yuca) 72
6. Peanuts for Oil 73
7. Tomatoes, Onions and Potatoes 75
8. Other Food Staple Crops 76
9. Tobacco 76
10. Coffee 78
11. Cocoa 80
12. Livestock Products 81

PART IV. ENERGY USE PROJECTIONS

A. ENERGY USE PROJECTIONS BASED ON PRODUCTION AND CONSUMPTION TRENDS FOR FOOD PRODUCTS 84

1. Production Trends for Major Agricultural Products 84

a. Historical Trends in Farm Level Agricultural Production and Projections of Fossil Energy Requirements 85
b. Total Fossil Energy in the Food System Projection 86

2. Food Consumption Demand Projections 88

a. Projection Model 89
b. Results of the Demand Projection 90

i. Rice 91
ii. Beans 91
iii. Subsistence Staples 91
iv. Meat 91

c. Overall Implications of the Food Demand Projection for Energy Use . . . 91

B. ENERGY USE PROJECTIONS BASED ON POSSIBLE ENERGY SAVING CHANGES IN THE PRODUCT MIX 92

1. Export Expansion of Energy Efficient Products (Cocoa) 93
2. Import Substitution Utilizing an Energy Efficient Product (Peanuts) 94
3. Corn/Bean Substitution for Rice 95

C. PROJECTIONS OF CHANGES IN ENERGY USE IN FOOD PROCESSING TECHNOLOGY 96

D. ENERGY USE PROJECTIONS BASED ON CHANGES IN LOCATION AND OTHER FACTORS THAT INFLUENCE PRODUCTION TECHNOLOGY 99

1. Rice 100

2. Peanuts 100
3. Beans 102
4. Meat-Milk 102
5. Summary of Technology Tests 103

PART V. APPENDICES

APPENDIX A. SOCIO-ECONOMIC PROFILE 105

A. INTRODUCTION 105
B. GENERAL DESCRIPTION OF THE DOMINICAN REPUBLIC 105
C. STRUCTURE OF THE ECONOMY 106
D. INDUSTRIAL PRODUCTION 108

1. Industrial Structure 108
2. Industrial Growth Trends 109

E. MINERAL PRODUCTION 109
F. FOREIGN TRADE 111

1. General Export, Import and Trade Balance Trends 111
2. Principal Export Products 112

APPENDIX B. PUBLIC SECTOR INSTITUTIONS 116

A. KEY INSTITUTIONS AND ACTIVITIES GERMANE TO ENERGY IMPROVEMENT ACTIVITIES FOR THE FOOD SYSTEM 116

1. The National Commission for Energy Policy (CNPE) 116
2. The Secretariat of State for Agriculture (SEA) 116
3. National Institute of Hydraulic Resources (INDRHI) 117
4. Dominican Electricity Corporation (CDE) 118
5. National Planning Office in the Technical Secretariat of the Presidency (ONAPLAN) 119
6. International Financing Institutions–the World Bank, Interamerican Development Bank, and the US Agency for International Development 121
7. Dominican Financing Institutions–FIDE, Dominican Development Fund, Central Bank 122
8. Dominican Institute for Industrial Technology (INDOTEC) 122
9. Private Sector and Other Institutions 123

B. PROBLEMS AND OPPORTUNITIES ANTICIPATED FOR ENERGY IMPROVEMENT ACTIVITIES IN THE FOOD/AGRICULTURE SYSTEM 123

1. Project Preparation 123
2. Inter-institutional Coordination 124
3. Linking Analysis to Planning, and Planning to Successful Implementation . . . 125

APPENDIX C. METHODOLOGY AND DATA SOURCES 128

A. DATA COLLECTION PROCESS 128

1. Data Collection for Energy in Agricultural Production and Rural Households 128
2. Data Collection for Agricultural Processing and Marketing 134

B. FOOD SYSTEMS FLOW MODEL 137

1. Agriculture Production 137
2. Agricultural Processing 138
3. Primary Transportation 138
4. Marketing, Storage and Secondary Transportation 138
5. Input/Output Methodology for Elaborating the Food Systems Flow Model . . 138
6. Food Systems Flow Diagrams 138

C. ENERGY INPUTS COEFFICIENTS ESTIMATION 138

D. PROJECTIONS ANALYSES 142

1. Agricultural Production and Consumption Trends 142
2. The Impacts of Technological Change in the Food System on Energy Use . . 142

APPENDIX D. TABULATIONS OF BASIC INPUT/OUTPUT DATA FOR MAJOR DOMINICAN REPUBLIC AGRICULTURE PRODUCTS STUDIED 143

APPENDIX E. MISCELLANEOUS DATA AND CONVERSION FACTORS 184

APPENDIX F. DATA FOR ESTIMATING RATES OF CHANGE IN ENERGY UTILIZATION IN FOOD PROCESSING INDUSTRIES 186

APPENDIX G. DATA FOR PROJECTING DOMESTIC HUMAN DEMAND FOR SELECTED AGRICULTURAL PRODUCTS IN THE DOMINICAN REPUBLIC 189

PART VI. BIBLIOGRAPHY

LIST OF TABLES

Table		Page
I-1.	Energy Consumption by Sector and Resource, 1978	7
I-2.	Energy Consumption in Transportation, 1978	9
II-1.	Sector Shares of Gross Domestic Product and Rates of Growth	11
II-2.	Land Capacity in the Dominican Republic	12
II-3.	Cultivated Land per Rural Inhabitant	14
II-4.	Agricultural Production Value for 1978	15
II-5.	Estimated Distribution of Production and Number of Farms by Level of Technology and Crop	16
II-6.	Correlation of Supplemental Irrigation with Use of Chemicals, Power and Farm Size	16
II-7.	Land Use and Gross per Hectare Income	17
II-8.	Physical Crop Yields (Kgs.) per Ha.	18
II-9.	Value of Production per Hectare by Crop and Farm Size	19
II-10.	Land Distribution by Farm Size in the Dominican Republic	20
II-11.	Sources of Gross Farm Income by Farm Size	21
II-12.	Livestock Revenue by Farm Size	21
II-13.	Production Growth Patterns for Food and Export Components of Agricultural Production in the Dominican Republic, 1973-1978	22
II-14.	Production Trends in Major Crop and Livestock Products, 1973-78	23
II-15.	Trends in the Value of Production for Major Crop and Livestock Products, 1973-78	23
II-16.	Producer (Farm Gate) Price Trends	24
II-17.	Distribution of Food Processing by Type of Establishment	24
II-18.	Growth Indices for the Food Processing Industry	25
II-19.	Composition of Food, Drinks, and Tobacco Processing, 1977	25

Table | Page

II-20. Quantity and Value of Processed Food Products, 1977 26

II-21. Disposition of Agricultural Production at the Farm Level 27

II-22. Transportation Distance and Mode for Farm Production 28

II-23. Average Daily Consumption and Estimated Nutritional Requirements 29

II-24. Consumption and Nutritional Requirements by Income Levels 29

II-25. Contribution of Major Crop and Livestock Product Groups 32

II-26. Per Capita Consumption and Daily Requirements by Major Food Group 32

II-27. Trends in Consumption and Nutrition 33

II-28. Trends in Apparent Consumption of Major Crop and Livestock Products, 1973-78 34

II-29. Food Balance Sheet Estimated for 1978 35

II-30. Food Balance Sheet Estimated for 1968 35

II-31. Trends in Food Imports and Exports, 1973-78 36

III-1. Estimates of Farm Level Fossil Energy Inputs into Major Agriculture Products, 1978 40

III-2. Physical Output Productivity Ratio and Energy Input Coefficients for Major Agriculture Products, 1978 42

III-3. RD$ of Output per 10^3 Kcal of Fossil-Based Energy Input for Major Products at the Farm Level 44

III-4. Efficiency of Energy Output/Input for Major Agriculture Products at the Farm Level 45

III-5. Summary of Fossil Energy Use in Food Processing, Marketing, Storage and Transportation by Product, 1978 47

III-6. Summary of Total Energy Use in the Food System 50

III-7. Distribution of Fossil Energy Use in the Total Food System 51

III-8. Pattern of Major Agriculture Product Fossil Fuel Energy Use Within Each Stage of the Total Agriculture Supply System 52

III-9. Overall Fossil Energy Use Efficiency of Major Food Products 53

III-10. Energy Use at the Farm Level by Energy Type and Major Crop 55

Table | Page

III-11. Energy Use by Energy Type in the Processing, Marketing and Transport Stages, 1978 56

III-12. Rural Energy Consumption per Family per Year by Income Group 57

III-13. Urban Energy Consumption per Family per Year by Income Group 58

III-14. Estimated Total Household Energy Consumption, 1978 59

III-15. Energy End Use Devices at the Farm Level 59

III-16. Energy End Use Devices in Small Scale Industry and Marketing 60

III-17. Energy by End Use Device Category for Households 61

III-18. Energy Use Patterns Associated with Different Agricultural Production Technologies in Rice 63

III-19. Energy Use Efficiency Ratios for Rice 64

III-20. Energy Use Patterns Associated with Different Agricultural Production Technologies for Beans 66

III-21. Energy Use Efficiency Ratios for Beans 67

III-22. Energy Use Patterns Associated with Different Agricultural Production Technologies for Corn 70

III-23. Energy Use Efficiency Ratios for Corn 71

III-24. Energy Use Patterns Associated with Different Agricultural Production Technologies for Cassava 73

III-25. Energy Use Efficiency Ratios for Cassava 74

III-26. Energy Use Patterns Associated with Different Agricultural Production Technologies for Peanuts 75

III-27. Energy Use Efficiency Ratios for Peanuts 76

III-28. Energy Use Patterns Associated with Different Agricultural Production Technologies for Tobacco 77

III-29. Energy Use Efficiency Ratios for Tobacco 78

III-30. Energy Use Patterns Associated with Different Agricultural Production Technologies for Coffee 79

III-31. Energy Use Efficiency Ratios for Coffee 80

Table | Page

III-32. Energy Use Patterns Associated with Different Agricultural Production Technologies for Cocoa 81

III-33. Energy Use Efficiency Ratios for Cocoa 82

IV-1. Production Trends for Major Agriculture Products and Estimated Extrapolation Parameters 86

IV-2. Projections of Fossil Energy Use at the Farm Level for Major Agriculture Products, 1980-2000 87

IV-3. Projections of Total Energy Used in the Food System for Major Agricultural Products, 1980-2000 88

IV-4. Projection of Energy Use Based on Trends in Consumption for Selected Food Products 90

IV-5. Energy Use Projections for Product Mix Changes 94

IV-6. Fossil Energy Use Projections for Food Processing and Handling Based on Trends in Processing Technology, 1973-1977 98

IV-7. Calculations of Energy Savings by Shifting Crop Production Locations and Technology 101

A-1. Dominican Republic: Percentage Distribution of 1977 GDP at Constant 1970 Prices and Sectoral Growth Rates 107

A-2. Dominican Republic: Structure of Industrial Production in 1977 108

A-3. Dominican Republic: Production of Selected Manufactured Products, 1973-1977 110

A-4. Dominican Republic: Mineral Production, 1973-1977 110

A-5. Dominican Republic: Imports, Exports, and Trade Balance 111

A-6. Dominican Republic: Export Value of Selected Commodities, 1974-1977 . . . 113

A-7. Dominican Republic: Export Volume of Selected Commodities and Countries of Destination 115

C-1. Sectoral Structure of the Input/Output Flows Model 137

C-2. Rice Input/Output Table 139

C-3. Sample Energy Input Coefficients Calculations for Rice 141

D-1. Raw Product Input/Output Table for Rice (10^2 MT) 146

Table | Page

D-2. Raw Product Input/Output Table for Beans (10^2 MT) 148

D-3. Raw Product Input/Output Table for Corn (10^2 MT) 150

D-4. Raw Product Input/Output Table for Plantain (10^2 MT) 152

D-5. Raw Product Input/Output Table for Cassava (Yuca) (10^2 MT) 154

D-6. Raw Product Input/Output Table for Banana (10^2 MT) 156

D-7. Raw Product Input/Output Table for Sugar Cane (10^2 MT) 158

D-8. Raw Product Input/Output Table for Tobacco (10^2 MT) 160

D-9. Raw Product Input/Output Table for Cocoa (10^2 MT) 162

D-10. Raw Product Input/Output Table for Coffee (10^2 MT) 164

D-11. Raw Product Input/Output Table for Sweet Potato (10^2 MT) 166

D-12. Raw Product Input/Output Table for Potatoes (10^2 MT) 168

D-13. Raw Product Input/Output Table for Tomatoes (10^2 MT) 170

D-14. Raw Product Input/Output Table for Peanuts (Oil) (10^2 MT) 172

D-15. Raw Product Input/Output Table for Onions (10^2 MT) 174

D-16. Raw Product Input/Output Table for Beef (10^2 MT) 176

D-17. Raw Product Input/Output Table for Milk (10^2 MT) 178

D-18. Raw Product Input/Output Table for Chicken (10^2 MT) 180

D-19. Raw Product Input/Output Table for Pork (10^2 MT) 182

E-1. Average Prices Used in Calculations for Economic Efficiency Ratios 184

E-2. Values Used to Calculate the Energy Content of Crops 185

E-3. Factors Used in Calculating Fuel Usage From Amount of Land Worked 185

F-1. Trends in Food Processing Energy Utilization Coefficients 187

F-2. Projections of Trends in Food Processing Energy Utilization per Ton of Output, 1973-1977 188

F-3. Kilocalorie Conversion Factors for Various Fuel Types and Energy Sources . . . 188

Table | Page

G-1. Time Series of DR Population Growth and Projections to Year 2000 190

G-2. Estimated Real Income/Capita – 1978-2000 191

G-3. Calculation of Income Elasticity of Demand Coefficients 192

LIST OF FIGURES

Figure Page

I-1. Data Collection Plan 2

II-1. Dominican Republic Primary Agricultural Areas 13

C-1. Rural Household Questionnaire, PCI-SEA, 1980 129

C-2. Small Scale Agricultural Processing and Marketing Enterprise Survey, 1980 134

C-3. Example Flow Diagram for Rice 140

CONCLUSIONS AND RECOMMENDATIONS

The most important finding of an intensive investigation of the fossil energy utilization in Dominican Republic agriculture production marketing and handling is that there are a number of ways in which fossil energy use can be reduced, curtailed or controlled. While the analysis does not contain an attempt to quantify the total savings possible, several examples are given and enough basic data are provided so that users of this report can make specific calculations appropriate to their own needs. In the examples cited, the projected savings amount to 40.5 x 10^9 Kcal at the farm level or about 4 percent of the total food system energy bill for non-sugarcane products in the target year 2000. Allowance must also

TABLE S-1

PROJECTED CHANGES IN ENERGY USE IN THE D.R. FOOD SYSTEM FOR SELECTED MAJOR AGRICULTURAL PRODUCTS, 1980-2000

	% Δ 1978-2000 Farm Level	% Δ 1980-2000 Processing and Handling	Energy Use x 10^9 Kcal - Year 2000		
			Farm Level	Processing and Handling	Total
Sugar Cane	*	32.2	*	2,150.2	
Tobacco	82.5	105.5	24.3	19.9	44.2
Cocoa	115.8	235.9	1.7	16.9	18.6
Coffee	78.5	51.7	8.7	147.0	155.7
Rice	165.5	176.1	357.9	66.7	424.6
Beans	104.8	–	11.9	–	11.9
Corn	68.3	44.3	6.1	6.3	12.4
Plantain	0	0	0	0	0
Cassava	12.3	–	2.5	–	2.5
Banana	0	37.1	0	.3	.3
Sweet Potato	16.1	12.1	.2	–	.2
Potatoes	11.5	-13.0	2.9	.1	3.0
Tomatoes	20.1	2.0	30.1	4.8	34.9
Peanuts	116.5	281.7	23.1	162.6	185.7
Onions	8.5	6.3	1.3	.4	1.7
Beef	65.5	232.7	54.7	38.9	93.6
Milk	24.4	370.6	2.3	334.3	336.6
Poultry	138.9	341.7	3.0	–	3.0
Pork	102.1	313.1	1.5	58.8	60.3
	Total non-sugar cane		532.2	638.5	1,170.7
	Total projected non-sugar w/o allowance for Δ processing technology				1,098.0
	Estimated difference due to Δ processing technology				72.9

*Basic farm level fossil energy utilization data are in dispute.
Sources: Tables IV-2, IV-3, IV-6.

be made for upward trends in processing and handling energy per ton of product. Data for such trends as well as for introduction of new energy using devices are quite skimpy, but crude calculations suggest that more intensive processing techniques, alone, could add 72.9 x 10^9 Kcal to what would otherwise be the projected total food system fossil energy bill in the year 2000. Table S-1 summarizes projected Dominican Republic food system fossil energy use and percentage changes over the 20-year interval, 1980-2000.

In value terms, the key agriculture products are sugar cane, beef, tobacco, rice, cocoa, plantain, chicken, coffee and milk. During 1978 these products accounted for 84 percent of total value (Table S-2). Except for rice and cane, none of these crops are particularly fossil energy intensive as measured on a per ton of output basis. Nevertheless, the total amount of fossil fuel energy required to produce, handle, process and distribute Dominican Republic agricultural output largely is a function of the products mentioned. Therefore, savings on the energy bill in DR agriculture have to be found through various adjustments involving the nine products mentioned.

TABLE S-2

ESTIMATE OF FARM LEVEL ENERGY UTILIZED IN FOOD PRODUCTION IN THE DOMINICAN REPUBLIC, 1978

Food Product Group	Metric Tons of Production 1978	Total National Farm Level in 10^6 Kcal	Percent of Farm Energy	Percent of Value of Product
Sugar Cane[c]	11,093,637	671,294	73.30	23.7
Other Export Crops	177,793	19,031	2.08	22.8
Major Food Staple Crops	1,268,097	147,890	16.15	23.0
Minor Food Crops	343,306	35,491	3.88	2.6
Subtotal	12,864,013	873,706	95.41	72.1
Selected Crops	390,050	42,042	4.59	24.5
All Agricultural Production	13,254,063	915,748	100.00	96.6

Sources: Adapted from Tables II-4, III-1 (cf. II-14).

Far and away the greatest energy user in the DR food system is sugar cane production and processing. Really substantial cuts in fossil energy intake must involve different production systems for this crop. Cane production absorbs roughly 75 percent of all DR fossil fuel energy at the farm level, but contributes only 23 percent to total value of agricultural sector production. At present over 75 percent of all cane production is categorized in the main body of the report under medium to high technology conditions at the farm level. This means that there may be some fossil fuel energy savings possibilities that can be studied either inside or outside the country. However, the cost effectiveness of any other techniques or production

options are not analysed in this report because such a dominant crop requires separate treatment beyond the scope of the small number of observations contained in the field data and surveys basic to the work reported here.

Of the remaining eight crops mentioned, rice is the most important factor in domestic food supplies. A relatively large proportion of rice production also occurs at a relatively high level of technology. These factors justify the considerable emphasis this report places on rice.

Other main crops are grown at relatively low technology levels, but may have further export potential or possibilities for achieving national nutrition requirements in different, less fossil energy demanding ways.

A considerable amount of Dominican Republic land is not suited to cultivated agriculture; its best agricultural use is for low energy intensive livestock production. Larger farms tend to concentrate, as might be expected, on animal husbandry and creation of improved pastures. Generally speaking, the better lands, or at least the more intensively utilized lands, are found in holdings of 10 hectares or less.

In fact, if we exclude garden plots of less than 0.5 Ha., over two-thirds of all farms are less than 5 Ha. in size. As a consequence, the field data for the present study largely are representative of what may be termed the small and medium farm situations. One of the important influences this particular data base has on the present study is that most fossil energy use at the farm level is measured in applications of fertilizer and a few chemicals.

Table S-3 provides an impression of how important crops relate to each other in energy terms. Each crop is ranked according to the various factors shown in the table: total fossil energy utilization, efficiency of utilization at the farm level, as well as the total food chain, according to value of the crop, etc. What we are looking for are important crops in value terms which might not put too great a strain on the fossil energy bill if production were to be expanded and important crops which would absorb less fossil energy if production is reduced or altered in some acceptable way.

Some information for sugar cane is shown, although as already mentioned, cane is so dominant a part of the agriculture economy that it must be dealt with on a separate basis. For example, it is estimated to be worst of all major products in fossil energy economic efficiency at the farm level. (Data are not available for even a rough estimate at the total food chain level.)

Low numerical rankings in Table S-3 indicate the largest benefits in every case. Rankings no higher than 7 in the situations where 19 values are shown or 5-6 in the situations where there are 14 or 15 rankings.[1] The more often a given crop has low rankings, especially if it is among the first 8 or 9 most valuable, the more important it is for energy study in terms of expanding production or substitution for less energy efficient output of other crops.

---

[1]Some crops could not be included in all the efficiency calculations. Tobacco is not a food and output energy is not comparable on a calorie basis. In semi-processed export form the same is more or less true for coffee and cocoa.

TABLE S-3

COMPARISONS OF RANK ORDERINGS ASSOCIATED WITH VARIOUS MEASURES OF ENERGY USAGE BY CROP

Product	Total Fossil Energy Rank			Total Value of Product Rank	Efficiency of Energy Usage at Farm Level Rank			Efficiency of Fossil Energy Usage in Total Food System		Percent Fossil Energy in Production Utilized at Food Chain Stage	
	Processing & Handling	Cultivation & Production	Over-all		Economic	Output/Input: Fossil	Output/Input: Fossil & Non-Fossil	Economic	Output/Input	Processing & Handling	Cultivation & Production
High Intensity Fossil Energy Requirements/MT at Farm Level											
Beef	14	17	14	2	15	12	11	8	10	31.9	68.1
Pork	13	6	10	11	6	6	7	9	12	95.1	4.9
Coffee	17	11	15	8	8	11	12	–	–	93.5	6.5
Peanuts	16	14	16	19	13	7	8	–	9	85.9	14.1
Medium Intensity Fossil Energy Requirements (MT at Farm Level)											
Tobacco	10	15	13	3	12	–	–	–	–	51.6	49.4
Rice	15	18	18	4	18	10	10	12	8	23.4	75.7
Milk	18	13	17	9	9	8	6	13	13	92.0	8.0
Potatoes	1	9	2	21	16	13	13	10	11	28.9	71.1
Corn	11	10	11	13	13	5	5	14	5	79.6	20.4
Beans	3	12	5	12	11	9	4	4	3	25.3	74.7
Tomatoes	9	16	12	22	16	15	15	11	15	37.1	62.9
Onions	2	7	2	18	10	13	14	7	14	51.8	48.2
Cocoa	6	6	5	5	4	3	3	–	–	90.0	10.0
Low Intensity Fossil Energy Requirement/MT at Farm Level											
Poultry	4	4	3	7	3	4	1	1	7	92.6	7.4
Cassava	7	8	8	10	7	2	2	5	1	79.2	26.8
Sweet Potatoes	5	3	3	14	5	1	9	6	2	95.9	4.1
Banana	13	1	9	}6	1	–	–	3	4	100.0	0
Plantain	8	1	7		2	–	–	2	6	99.9	0.1
Sugar Cane											
Sugar	19	19	19	1	19	–	–	–	–	94.8	5.2

Sources: Tables III-1, III-4, III-7, III-8, III-9.

Alternatively, the higher the rankings, relative to overall value, the more important for possible reduction in output, or shift in production technology, etc.

By these measures banana, plantain, poultry, cocoa and rice are obvious. Possible candidates that are not so highly valued, but which are important from a food standpoint, are cassava or sweet potato or pork, corn and beans.

Tobacco, beef and coffee are also somewhat like rice in that they generate substantial agricultural value and absorb relatively large amounts of fossil fuel energy. However, there appears to be a good domestic market for beef, a product that utilizes pasture and range resources not suitable for cultivated crops, while tobacco plus coffee have export potential that would be difficult to curtail. The actual number of products (outside of sugar cane) that hold out potential for meaningful fossil fuel consumption adjustment is somewhat limited.

The policy options that will reduce fossil energy use in the food system or increase efficiency of use within the constraints of necessary sector income or national nutritional requirements fall into three categories: A) change the mix of products produced or consumed; B) introduce new energy technologies, alter conversion efficiency or introduce new end-use devices; C) shift the emphasis on existing methods or techniques that will produce a given crop.

Reliance on any or all of these options is conditioned by domestic resource availabilities of all sorts, trends in agricultural supply and consumer demand and potential gains from international trade. In this study we assume that there are good long-run prospects for other crops besides sugar. We assume that some shifting in location of crop and livestock production could be accommodated and that some shifts in eating habits such as substitution of corn/beans for rice could be tolerated.

A. CHANGING CROP MIX

One way to save on imported fossil fuel energy is to earn foreign exchange through agricultural exports which embody minimal amounts of fossil fuel energy. Cocoa is a case in point. Currently, production of this valuable crop accounts for 8.7 percent of the total value of agricultural output.[2] An assumed 40 percent increase in output of cocoa, all things equal, would add a 3 to 4 percent increment to that sector's income. This could be obtained at an added increment to the agriculture sector's fossil fuel bill of under 0.5 percent.

Other products, having low fossil fuel energy requirements, which might be converted into profitable long term exports are poultry and unprocessed pork. External markets for both these products could be assessed at little cost.

Poultry and hog production may be a way of converting other low energy products, such as various fruits and tubers (which represent low quality nutrition, poor demand prospect inside the country, and virtually no export markets) into products which have high potential in

---

[2]By comparison, beef production accounts for 11.4 percent of the income; tobacco, 9.0 percent; rice, 8.9 percent.

all three. If chickens are fed much grain or if pork is processed, the favorable farm level energy efficiency coefficients shown in Table S-2 will not be so attractive from a fossil energy standpoint—this question merits further investigation. Both fresh pork and chicken might also substitute for some beef in domestic markets, at a savings on fossil fuel energy, at little or no cost to nutrition quality.

One of the most obvious possibilities for import substitution would be to increase domestic production of oil seeds. But as is well known, any crop, soybean, safflower, peanut or whatever, requires considerable processing and handling energy. Over 100,000 MT of raw peanuts would be required to offset all DR edible oil imports. A calculation of the energy impacts of expanding domestic peanut production by only 75,000 MT shows that total food chain fossil energy requirements would be increased 9.5 to 10.5 percent. Increased production would also require a considerable amount of new, good quality land which would have to come at the expense of current crops. On net balance, the best option may be to devote some effort to expansion of export trade in other products and use the foreign exchange generated to continue to finance edible oil imports.

At present rice production absorbs a lot of farm level energy in the DR. It is several times as demanding as corn or beans at the farm level and it is still more than double even when processing and handling of the latter two crops are taken into account. In terms of calories, all three crops substitute for each other on a 1:1 basis. Corn and beans can be grown each season in association. At a common planting ratio of 60 percent corn/40 percent beans, every ton of rice production switched to corn/beans would generate a net fossil energy saving of 0.295×10^6 Kcal at the farm level and 0.272×10^6 Kcal at the overall food system level. This amounts to a farm level saving of about 0.1 percent/1000 MT of rice substituted. But even 20,000 MT substitution would save only 0.8 percent on the overall food system fossil energy bill. To save 4.0 percent on the food system energy bill would require a switch of about 100,000 MT, or 20 percent of projected 1980 rice production. As we shall see, greater energy conservation in rice production might be achieved in another way.

B. ALTERATIONS IN CULTIVATION METHODS

An investigation of many of the factors that influence crop production and management decisions revealed that for certain products, fossil fuel efficient techniques are already in place and are responsible for important shares of annual output. By switching "technologies" it appears that reliance on fossil based fuels can be reduced. In some cases the alternatives seem to be associated with different DR farming regions. Test calculations, therefore, were made of the effects of shifting locations of production for major shares of two important crops. Altering production location does not put consumer tastes and preferences under pressure, since the overall quantity of the product entering market channels would be unchanged.

If 25 percent of current rice production were to be shifted from the north to adjacent east and west regions, the simpler technologies utilized in the latter zones would cut

back demand for fossil based fuels. Currently rice utilizes 55 percent of all non-sugar cane fossil fuel energy at the farm level. It is estimated that this percentage could be reduced 6 to 7.5 percent over the next 15-20 years with the size of shift mentioned.

It appears that shifting zones of production would also have beneficial effects on fossil energy consumption in the case of milk/beef production. As shown in Table S-3 both of these products are relatively energy demanding. But a lot of this energy utilization is concentrated in the north and northeast regions. If we imagine that about 40 percent of current production in these regions is shifted to other zones, there could be a further saving of 1.5 percent of fossil fuel energy use at the farm level due to the reliance on less intensive techniques.

In the case of peanuts, if 60 percent of production were put into the hands of the smallest scale farmers, about 1 percent of the total farm level energy bill could be saved. In the case of beans, if the current 67 percent of the crop that is planted without multiple cropping, or in association with corn, could be made the object of different techniques, about 1.1 percent of all farm level fossil energy at the farm level could be saved. This is because the "solo" planting practice is almost four times as energy demanding on a Kcal/ton basis as the "associated planting" technique.

In sum, the test calculations made in the main body of the report suggest potential savings of fossil fuel energy at the farm level of about 10-13 percent. Other assumptions and calculations would lead to greater or lesser net potential for energy reduction.

C. TRENDS IN PROCESSING AND HANDLING ENERGY REQUIREMENTS

In addition to changing the mix of products or reordering emphasis on the techniques or methods of production actually employed at the farm level, it may be possible to alter food processing and handling technology or to modify reliance on various energy using devices throughout the food chain from the farm level to the retail consumer. A profile of the current reliance on various devices and various fuel sources is provided in the main body of the report.

Unfortunately, none of the available field data provided information about trends in processing, storage, marketing and handling techniques. Some estimates based only on reported trends in food processing energy utilization are the only projections provided. These far from perfect secondary data suggest that energy trends are not upward in every case. This seems to be the case in sugar cane processing. There may be a small upward trend in energy use per unit of production in tobacco, bananas and plantains. Moderate increases, of up to 30 percent during the next 20 years, were calculated for rice and coffee. Sharp increases were calculated for cocoa and all livestock products (77 and 110 percent, respectively).

As noted, the fossil energy trend data are very crude and do not cover storage or other marketing and handling trends, or give any hints about what might be accomplished by switching energy use devices themselves. But, on balance, the rough result of the net effects of these projections would be a 70 to 80 percent increase in non-sugar cane fossil

energy utilized to process the expected amounts of production by the year 2000. If sugar cane is included, the change would be about 50 percent.

Thus, while there appear to be some definite possibilities for energy savings in DR food system operation (at the farm level), there is a general offsetting upward trend in utilization at other stages in the food chain. Or, to put it differently, the normal expectation for increased use of fossil fuels in processing and handling may be offset by farm level adjustments in energy use. Of course, this is not to imply that such adjustments can be made easily and without concerted planning and leadership efforts.

It is obvious that processing energy would be saved by greater reliance on various tubers plus maximum emphasis on fruits and fresh vegetables that require little or no further processing after farm harvesting or drying. However, there are limits to how far a low quality tuber diet can be pushed as long as more highly regarded alternatives can be obtained.

PART I

INTRODUCTION

A. AIMS OF THE STUDY

The objective of this study is to examine the role of energy in the food system of the Dominican Republic. Energy interactions figure importantly at all stages in the food chain from primary production to final marketing and consumption. The study is designed to provide quantitative information on energy inputs at all levels in this rather complex system. Using a broad quantitative data base or model of the food system, the study makes a series of simplified projections of energy use into the short and middle term future and explores alternatives for product, technology and energy use adjustments which might be effected by public policy.

Certain parts of the study such as farm level production analysis build on relatively in-depth data bases. Other components of the total system such as food processing and household energy use have acceptable empirical underpinnings. Marketing, storage, sugar production and transportation have unsatisfactory data support.

While an aim of the study is to create some links between the data gathered and public options, the result is illustrative rather than definitive. The result suggests policy alternatives or directions rather than concrete projects or programs.

B. SALIFNT FEATURES OF METHODOLOGY

The basic analytical framework for the study is a three-step process:

1. Elaborate a quantitative description of the food system or food chain showing the quantities of food products and their flow patterns through the various stages from production through processing-marketing-transportation to final consumption. Flow patterns are illustrated in Appendix C.
2. Quantify the energy inputs into each of the stages of food production, processing and distribution. This phase involved measuring energy inputs by energy type (kerosene, firewood, etc.) and by production or distribution technology. For example, rice production is divided into different production technologies depending on the levels of fertilizer and mechanization. Processing was divided into small scale low technology and large scale modernized plants. The data are used to create energy input coefficients estimates.
3. Based on the food system flow data and the energy input coefficients, a series of simple projections is made to examine the energy and food system implications of changes in the system. Some of the projected changes will be simple

extrapolations of growth trends in production and demand for food. Others will explore the energy implications of changing agricultural technology. Shifts in the system which could be affected by public policy will be explored. The Projections Analysis is necessarily limited by time and resources to simple analytical techniques; no extensive quantitative modeling methods have been used.

Based on this methodological outline, the PCI team conducted a review of available data in the DR and designed a data gathering plan to complement the extensive existing survey data on the food system. The PCI field surveys were undertaken by contract with the Secretaria de Agricultura.

The data collection plan was built around three *Basic* primary data files which already exist and three *Supplemental* field surveys which were undertaken to complement the basic sources. Figure I-1 outlines these six data sources and indicates approximate numbers of observations in each data set. The supplemental surveys were undertaken to fulfill the data requirements for the outlined descriptive and analytical methodology.

FIGURE I-1

DATA COLLECTION PLAN

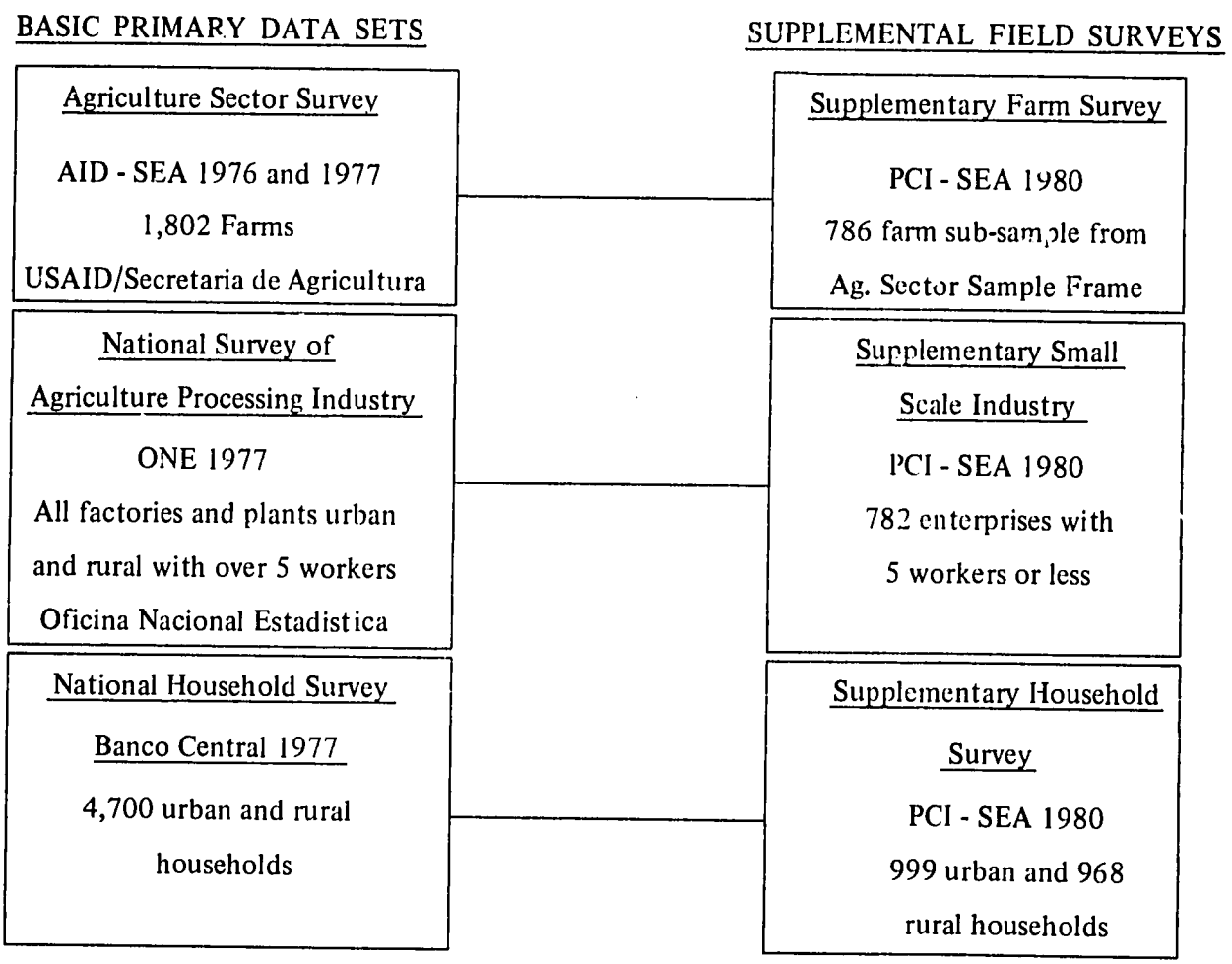

C. ENERGY SYSTEM OVERVIEW

1. Energy Resources and Production

a. Commercial Energy Resources

Although oil-bearing formations are known to exist in the southwestern portion of the Dominican Republic, no commercially significant deposits have been identified.

In the absence of any domestic production, the Dominican Republic has had to rely on imports to satisfy all of its oil requirements. Since 1973, an oil refinery has been in operation with a capacity of approximately 11 million barrels (16×10^{12} Kcal) per year. It processes reconstituted crude oil, consisting of approximately 60 percent crude and 40 percent semi-finished products imported from Venezuela. The output of the refinery, in volume, is 30 percent fuel oil, 28 percent gas oil, 24 percent gasoline, and 18 percent other products.

Peat and lignite deposits have been identified in the Bajo Yuna area and on the Samana peninsula, but the magnitude and quality of these reserves have not been quantified.[1] It is, therefore, impossible to determine whether the deposits will warrant exploitation. With no domestic coal production to date, the Dominican Republic has had to import small quantities of coal (estimated at less than 200 tons in 1977).[2]

The theoretical hydroelectric generation potential in the Dominican Republic has been estimated at $50{,}000 \times 10^6$ kWh (43×10^{12} Kcal) per annum, of which between 10 and 40 percent could technically be developed. In the absence of comprehensive hydrographic data, however, such estimates are necessarily very uncertain and it may mean more to consider only the hydropotential from sites which have already been evaluated. As of 1978, 120 sites had been identified with an electricity generation capability of 5,560 GWh per annum. A small number of minihydro (less than 5,000 KW_e) sites had also been identified. Total electricity generated from hydropower is estimated at 270×10^6 kWh (232×10^9 Kcal) in 1978.

The information on the solar resources of the Dominican Republic is limited to radiation data from four sites, sunshine hour data from seven sites, and cloud cover estimates from a total of 24 sites.[3] Acosta,[4] basing his calculations on the correlation between cloud cover and solar radiation, estimates an annual average radiation of 2,000 joules per cm^2 for the 24 stations measuring cloud cover. On a monthly basis, the average radiation estimate varies from 1,800 joules per cm^2 for January to 2,300 for July.

---

[1] Roberto Liz et al., "Evaluation de la Situation Energetica Nacional," Banco Central de la Republica Dominicana, Santo Domingo, 1978.

[2] Oficina Nacional de Estadistica. unpublished data.

[3] H. Tabor, "Solar Energy in the Dominican Republic," report to the Inter-American Development Bank, forthcoming.

[4] Discussed in Tabor, *ibid.*

Although the existing estimates show relatively high levels of solar radiations, this source is virtually untapped at present. One company, Energia Solare S.A., has been manufacturing solar water heaters, but has only sold 300 units in the last three years.

Data on the wind energy resources of the Dominican Republic appear to be even more limited. However. the information that does exist is not promising. The average wind speed at the meteorological sites that exist has been estimated at about 4 m/s (which is well below the optimal wind speed for most commercial windmills). Tabor[5] estimates that there are probably 500 or more very small pumpers in remote areas without electricity, but that they are being replaced by electricity and gasoline pumps.

There are a number of indications that the Dominican Republic may have significant geothermal resources. Geographically, the country lies in a tectonically active region, a prerequisite for the existence of high temperature geothermal resources. Past lava emissions and volcanic activity have been identified in geological studies and thermal springs exist along one of the island's faults. In addition, a chemical analysis[6] of the two major thermal springs (Yayas and Maguella in the Azua Province) showed a similar chemical composition to spring waters in currently exploited geothermal sites. It is possible, however, that the geothermal resources are limited to low grade head with limited applications. Further exploration (including drilling) is required to determine the extent and quality of this resource.

b. Noncommercial Energy Resources

According to a forest inventory for the Dominican Republic[7] published in 1973, there are about one million hectares of forest in the Dominican Republic. Of the forested area, only 34 percent was found in its natural state, the remainder having been partially depleted by logging (38 percent), charcoal production (17 percent), or forest fires, grazing, and nomadic agriculture (11 percent). Currently, sustainable yields of roundwood from accessible forest land is estimated at between 4 to 8 x 10^9 Kcal.

In addition to the wood resources on forested areas noted above, wood can be collecte from the trees located outside of forests and from tree stumps and branches not included in the forest inventory. Reforestation projects and tree farms could also add significantly to the wood reserves. However, in the absence of adequate data, we will not attempt to assess these resources.

Approximately 20 percent of the Dominican Republic's land area, which amounts to about one million hectares, is under agricultural cultivation. Total agriculture residues produced from major crops in 1977 are estimated at 4.5 million metric tons with an energy content of over 10 x 10^{12} Kcal. Sugar cane alone accounts for at least 70 percent of the energy content of these agricultural residues and is currently the only one used extensively as a fuel. The total energy content of the sugar cane residue, or bagasse, amounted to about 7.5 x 10^{12} Kcal in 1978.

---

[5]H. Tabor, *ibid.*

[6]Described in Corporacion Dominicana de Electricidad, "Geotermia," 1978.

[7]"Inventario y Fomento de los Recursos Fonertales, Republica Dominicana," Informe technico 3, FAO, UNDP, Rome, 1973.

The use of residues from crops other than sugar as fuels is constrained by the difficulties involved in collection. Thus, it is not realistic to assume that these resources could be utilized fully for energy conversion.

2. *Energy Consumption*[8]

a. Trends and Characteristics

Total energy consumption in the Dominican Republic increased from an estimated 17,600 x 10^9 kcal in 1970 to 38,050 x 10^9 kcal in 1978 (see Table I-1), with an average annual growth rate of about 10 percent. Over the same period, per capita energy consumption rose from 4.4 x 10^6 kcal to 7.4 x 10^6 kcal.

Oil-based fuels constituted 55 percent of all the energy consumed in 1978 and were primarily used in public utility electric generation, transportation, manufacturing, and mining. In the absence of any domestic production, all the oil is imported. The composition of petroleum imports changed significantly with the installation of an oil refinery in the port of Haina near Santo Domingo. Since its first full year of operation in 1973, reconstituted crude oil has been imported from Venezuela to supply both the refinery and some captive electricity generation in the industrial sector. Of the 21,130 x 10^9 kcal oil consumed in the country in 1978, fuel oil and crude accounted for 52 percent, gas oil for 20 percent, and gasoline 18 percent.

Hydropower resources still accounted for only 2.1 percent of the total energy consumed in 1978 in spite of a comparatively high annual growth rate of 16 percent. Wood consumption, including that for charcoal, is estimated at 8,870 x 10^9 kcal, or 23 percent of total energy consumption in the country. The previously high rate of deforestation has decreased significantly due to the fact that most remaining forests are located in more remote areas, and because logging for lumber has been under strict government control since 1967. However, no restrictions exist on firewood cutting and the present rate of wood consumption is still high relative to the existing resource base. The hurricane of 1979 also caused considerable damage through the widespread uprooting of trees, which made wood freely available in that year to many rural households without the need for cutting, gathering and transport. This unusual circumstance, with the accompanying temporary drop in charcoal production, added to the difficulties of arriving at estimates of "normal" firewood and charcoal consumption.

Since the Dominican Republic is a large sugar producer, a considerable amount of bagasse accrues as a residue from sugarcane processing. This is estimated on the basis of sugarcane production figures at 7,250 x 10^9 kcal and is used as a fuel in the sugar processing mills. A small amount is also passed through a furfural extraction process for conversion to

---

[8]This section is largely based on the results of "Energy Strategies for the Dominican Republic: A Report of the National Energy Assessment," Energy Development/International, forthdoming, and "A Preliminary Assessment of Energy Supply and Consumption in the Dominican Republic," BNL 51202, November 1979.

animal feed. Almost all of the bagasse produced is burnt in the boilers of the sugar mills, but it is difficult to determine how much of this represents a necessary input to satisfy the mills' internal requirements for steam and electricity. This is a point that requires further investigation (see the note in Table I-1).

In addition to the energy consumption shown in Table I-1, small amounts of other energy sources are used, which however do not make up a significant portion of total energy. These include coal, solar and wind energy, and other crop residues. Sugar cane molasses is used as animal feed or used to produce potable alcohol, primarily rum, or exported. Even though their share in present energy consumption is insignificant, some of these energy sources have a good potential for future development.

b. Sectoral

As shown in Table I-1, the industrial sector, comprised of mining and manufacturing, is the largest energy consumer, accounting for 30 percent of the oil, 47 percent of the biomass energy consumption, and 37 percent of the electricity sold by the public utility. The residential sector is the next largest total energy consumer, but 87 percent of the residential energy is from wood (either directly or in the form of charcoal) which is used inefficiently--the amount of useful energy consumed by the residential sector is comparatively small. Transportation, which depends totally on oil-based fuels, accounts for about 28 percent of the oil consumption but only 16 percent of total energy use. An additional 15 percent of total resource consumption is contained in losses in electricity generation and transmission by the public utility.

c. Agriculture

As Table I-1 shows, direct fuel consumption in agriculture (in the form of gas oil) constitutes a negligible portion of total national energy use. Even when the energy embedded in fertilizer is added, agriculture still accounts for less than 1 percent of the national total. This implies that future energy consumption in agriculture, even though of crucial importance to the agricultural sector itself, will have no significant impact on the national energy system in the foreseeable future. Details of energy consumption in agriculture are discussed in subsequent chapters.

d. Industry

In 1978 the industrial sector (here defined as mining and manufacturing) consumed approximately 14,460 x 10^9 kcal, of which 44 percent was oil, 52 percent bagasse (this number is uncertain as explained earlier), 3 percent purchased electricity and 1 percent wood. Most of the bagasse and crude oil, and part of the fuel oil and gas oil, is used for captive electricity generation (that is, electricity generated by the industries themselves).

The bulk of the energy in the manufacturing sector is consumed by food processing, including sugar. It is likely, however, that bagasse consumption in the sugar industry has been overestimated, which would then shift some of the weight away from sugar processing (see note to Table I-1).

TABLE I-1

ENERGY CONSUMPTION BY SECTOR AND RESOURCE, 1978

(10^9 kcal)

	Gasoline	Gas-Oil	Fuel Oil & Crude	Other[e]	TOTAL OIL	Hydro	Purchased Electricity	Bagasse[d]	Wood	Charcoal	Total Direct Energy Amount	Total Direct Energy Percent
Agriculture		50			50						50	--
Industry[a]		630	5,720	80	6,430		530	7,250	250		14,460	38
Transportation	3,720	1,680	90	490	5,980						5,980	16
Commercial & government[b]		450		60	510		360				870	2
Residential				740	740		540		4,640	3,970	9,890	26
Public Utility		1,420	4,930		6,350	800	-1,430				5,720	15
Other	30	80	320[c]	650	1,080						1,080	3
TOTAL	3,750	4,310	11,060	2,020	21,140	800	0	7,250	4,890	3,970	38,050	100

[a]Mining and manufacturing.

[b]Includes the government services of water, sewerage, and garbage disposal, government buildings, and energy consumed at construction sites.

[c]Imported by CDE for electricity generation at Falconbridge, the ferronickel complex. In addition to satisfying its own needs, Falconbridge sells approximately 224×10^9 kcal annually electricity to the public utility.

[d]Practically all the bagasse is burned at the sugar mills to create steam for electricity generation, sugar cane crushing, and the evaporation process. Accordingly, all the bagasse produced is entered in the table as energy consumed, representing 19 percent of total national energy consumption. It is very unlikely, however, that the entire amount of bagasse is necessary to provide for the sugar mills' energy requirements although now all is burnt as a convenient method of disposal (The same is the practice in other countries.) Further investigation is needed to determine the proportion of bagasse necessary for sugar processing -- perhaps also calling for some equipment change to improve the energy utilization efficiency.

[e]Includes kerosene, aviation fuel and other petroleum products.

Sources: "Energy Strategies for the Dominican Republic: A Report of the National Energy Assessment" and PCI-SEA Rural Energy Survey.

Within the mining sector, the Falconbridge nickel enterprise is dominant, using all the crude oil consumed in this sector. The unstable market for nickel combined with rising oil prices has led to production cutbacks, and Falconbridge is currently selling some of its excess electricity to the public utility, CDE. Since nickel is one of the Dominican Republic's major exports, its dependence on oil is of particular concern.

e. Transportation

Transportation is the third largest user of oil after industry and residential use. As shown in Table I-2, it consumed a total of 5,980 x 10^9 kcal of petroleum fuel in 1978, of which 63 percent was gasoline, 28 percent gasoil, and the remainder jet fuel for aviation and bunker oil for navigation. The largest share of fuels is consumed by interurban mass transport, which relied primarily on gasoline and much less on gasoil. It is expected, however, that the relative mix of gasoline and gasoil in mass transport will change dramatically in the future as a result of the government's policy of replacing publicos (fixed route taxis) with new minibuses.

Approximately 32 percent of all fuel in the transport sector was consumed by interurban mass transport; 15 percent by urban mass transport; 15 percent by private automobiles; 23 percent by trucks; and the remainder by private buses, aircraft, ships, boats, and others. The division between freight and passenger transport is not clearcut since the trucks carry passengers as well as goods. It appears, however, that at least two-thirds of the fuel was used for passenger transport.

The vehicle fleet has been growing at over 10 percent a year since 1972 in spite of the oil price increases and high automobile import taxes. By 1977 there were approximately 37 vehicles for every 1,000 people compared to 26 in 1972. Private automobiles are most numerous in Santo Domingo where about three-quarters of the private cars are registered and the majority of taxis are located.

f. Commercial and Government

The energy consumed in the commercial and government sector amounted to 863 x 10^9 kcal, or 2 percent of total national consumption. The breakdown into enduses is as follows: 31 percent for lighting and other; 24 percent for water supply, sewerage, and garbage collection; 20 percent for construction; 13 percent for air conditioning; and 12 percent for water heating and cooking. It should be noted that this sector includes commercial and public establishments as well as private nonresidential buildings, but not households. The energy sources employed for these uses are gas oil and electricity, with an additional small amount of LPG. The energy demand for buildings is largely in the form of electricity, while the use of petroleum products for cooking and water heating takes place primarily in restaurants, hotels, and hospitals.

g. Residential

The use of fuels for domestic purposes is dominated by cooking and lighting requirements. The fuels used are primarily charcoal, LPG, and electricity in urban areas and wood and charcoal in rural areas (with small amounts of kerosine used in both areas).

TABLE I-2

ENERGY CONSUMPTION IN TRANSPORTATION, 1978

(10^9 kcal)

	Gasoline	Gasoil	Other	Total Amount	Total Percent
Urban Mass	741	185		926	15
Interurban Mass	1550	359		1909	32
Private Automobiles	864	30		894	15
Large Trucks		761		761	13
Camionetas (small trucks)	478	94		572	10
Private Autobuses		71		71	1
Aircraft	54		435	489	8
Ships and Boats		182	93	275	5
Miscellaneous	82			82	1
Total	3,769	1,682	528	5,979	100

Source: "Energy Strategies for the Dominican Republic: A Report of the National Energy Assessment."

The total fuel consumption of the residential sector is estimated at 9,900 x 10^9 kcal, of which approximately 47 percent is wood, 40 percent is charcoal, 7 percent is LPG and kerosine, and 6 percent is electricity. The differences in the fuel shares between urban and rural households are striking. In the rural areas, wood supplies about 84 percent of the requirements, charcoal 14 percent, and kerosine and LPG the remainder. In the urban areas the situation is reversed, with charcoal being the most important (73 percent) and wood and kerosine almost insignificant.

As far as the type of enduse is concerned, cooking predominates in both rural and urban households: it constitutes 98 percent of the energy used in rural and 43 percent in urban areas. Other significant uses by urban households are lighting, water heating, and air conditioning.

h. Electricity Generation

Among the energy demand sectors, electricity generation plays a special role insofar as it represents an energy transformation activity and not strictly speaking a final demand sector. However, in order to be able to show the amount of electricity consumed by the different demand sectors and still balance the table (Table I-1), the electricity generating system must be added both as a row (Public Utility) and a column (Purchased Electricity). The net contribution of the system to energy resources is by definition zero. In 1978 the public utility consumed a total of 6,350 x 10^9 kcal oil in addition to an equivalent of 800 x 10^9 kcal from hydro. At the same time it sold the equivalent of 1,430 billion kcal of electricity (entered as

a negative demand, i.e., a supply in Table I-1), implying an energy loss during generation, transmission and distribution of 5,720 x 10^8 kcal, or 15 percent of the total energy consumed in the country. The electricity is purchased by the manufacturing sector, urban households, and by the commercial and government sector.

The Corporacion Domincana de Electricidad (CDE) supplies the country from an integrated grid that extends to all major population centers. Due to a number of problems, CDE has been unable to supply the connected load in the last few years. These are: insufficient capacity and installation delays; poor condition of some of the existing generating equipment; inordinate transmission and distribution losses, in part due to theft; and unresolved water allocation disputes between irrigation uses and hydroelectric power generation. Since the public utility is already the biggest oil consumer and electricity sales are growing at 12 percent per year (1970 to 1977), the inefficiencies in electricity generation and delivery are of particular concern.

In addition to the electricity sales of the CDE, captive electricity generation within the industrial sector is widespread. There is very little documentation on the installed capacity and electricity generation within the industrial sector, although generator sales data[9] provide evidence that captive generation has been increasing rapidly in recent years, presumably as a result of frequent outages by CDE and electricity price increases.

---

[9]The "emergency" generator sales between 1973 and 1977 (quoted in Roberto Liz et al., "Evaluacion de la situacion Energetica National," July 1978) were for 624 plants with a total capacity of over 100 MWe, equivalent to approximately 20 percent of the effective capacity of the CDE system.

PART II

FOOD SYSTEM OVERVIEW

A. CROP AND LIVESTOCK PRODUCTION

The agricultural sector in the Dominican Republic accounted for 26 percent of the total gross domestic product in 1969, but the share dropped to 19.6 percent during a period of high economic growth ending in 1974. Further erosion in the sector's relative position continued into the late 1970's. Table II-1 outlines the sectoral composition of the GDP. The most dynamic sectors have generally been mining, industry, and construction.

TABLE II-1

SECTOR SHARES OF GROSS DOMESTIC PRODUCT AND RATES OF GROWTH

(1970 prices)

	1969 %	1974 %	1977 %	1969-74 %	1974-78 %
Agriculture	25.9	19.6	17.1	4.5	1.0
Mining	1.5	5.6	5.6	44.5	9.2
Industry	15.7	17.3	18.4	12.6	5.3
Construction	4.6	6.4	7.2	18.8	7.4
Housing	8.0	7.5	6.7	9.2	7.2
Commerce	17.0	18.4	16.7	11.9	5.7
Other Services	27.0	25.2	28.3	–	–
Overall				10.0	5.5

Source: Plan de Desarrollo Agropecuario, SEAPLAN, Table 2.1, and "Boletin Mensual," Banco Central, April 1979, pp. 118-183.

During the same 1969-74 period the agriculture sector was growing at 4.5 percent per year and the total economy at 10.4 percent. During the four years from 1974-1978 the growth rate for agriculture slowed to 1 percent per year due to a serious drought in 1975 and slow recuperation during the later years in that period. The hurricane in 1979 brought devastation to the agricultural sector and has certainly caused a serious setback in short run growth.

The food category has increased at a rate more than 3 percent higher than the sector as a whole. Export crops have only grown slightly (1.5 percent); non-sugar exports have remained almost stable. Even though the growth rate of food is substantially higher than that of agricultural exports, the result was insufficient to keep up with population growth during the same four-year period, 1974-1978.

The agricultural sector of the Dominican Republic is heavily oriented to the production of export crops—sugar alone accounts for 23.7 percent of total value of agricultural and livestock production; if coffee, cocoa and tobacco are added, export oriented crops comprise more than 46 percent of total agriculture value.

1. Food Production Resources

The Dominican Republic (DR) is characterized by a tropical climate with annual average temperatures ranging from 24-27 degrees centigrade. Rainfall varies widely from location to location, but in many agricultural areas it is insufficient to support intensive agriculture among the majority of DR farms. Except for rice, the bulk of basic crops (sweet potato, pigeon pea, corn, peanuts, casava) and commercial crops (cacao, coffee, sugar cane, coconut, tobacco) are grown without supplemental irrigation.

Of the 4,827,000 hectares in the DR, 67 percent are unsuitable for regular cultivation. Perhaps 25 percent of this non-agricultural land is suitable for natural pasture and a considerable amount of livestock production. Table II-2 outlines the land use capacity of the DR. This capacity is distributed as shown in Figure II-1.

TABLE II-2

LAND CAPACITY IN THE DOMINICAN REPUBLIC

Class	Area (Ha. 000)	Percent	Productive Capacity
I	52.8	1.1	Most intensive cropping
II	233.5	4.9	Intensive cropping
III	309.3	6.4	Moderate cropping
IV	361.7	7.5	Non-intensive cropping
V	603.3	12.6	Cultivated pasture
VI	557.6	11.6	Improved pasture
VII	2,500.0	52.1	Forest and natural pasture
VIII	120.1	3.7	Other
Total	4,797.0	100.0	

Source: Plataforma para el Desarrollo Económico y Social de la República Dominicana (1965-1985), Oficina Nacional de Estadística, Santo Domingo, 1968, y Estudio de los Recursos Naturales de la República Dominicana, Secretaría General de la Organización de Estados Americanos, Washington, D.C., 1969.

The map indicates that the largest agricultural use of land in the DR is in what might be described as mixed cropping and grazing. Sugar cane is concentrated in the coastal plain

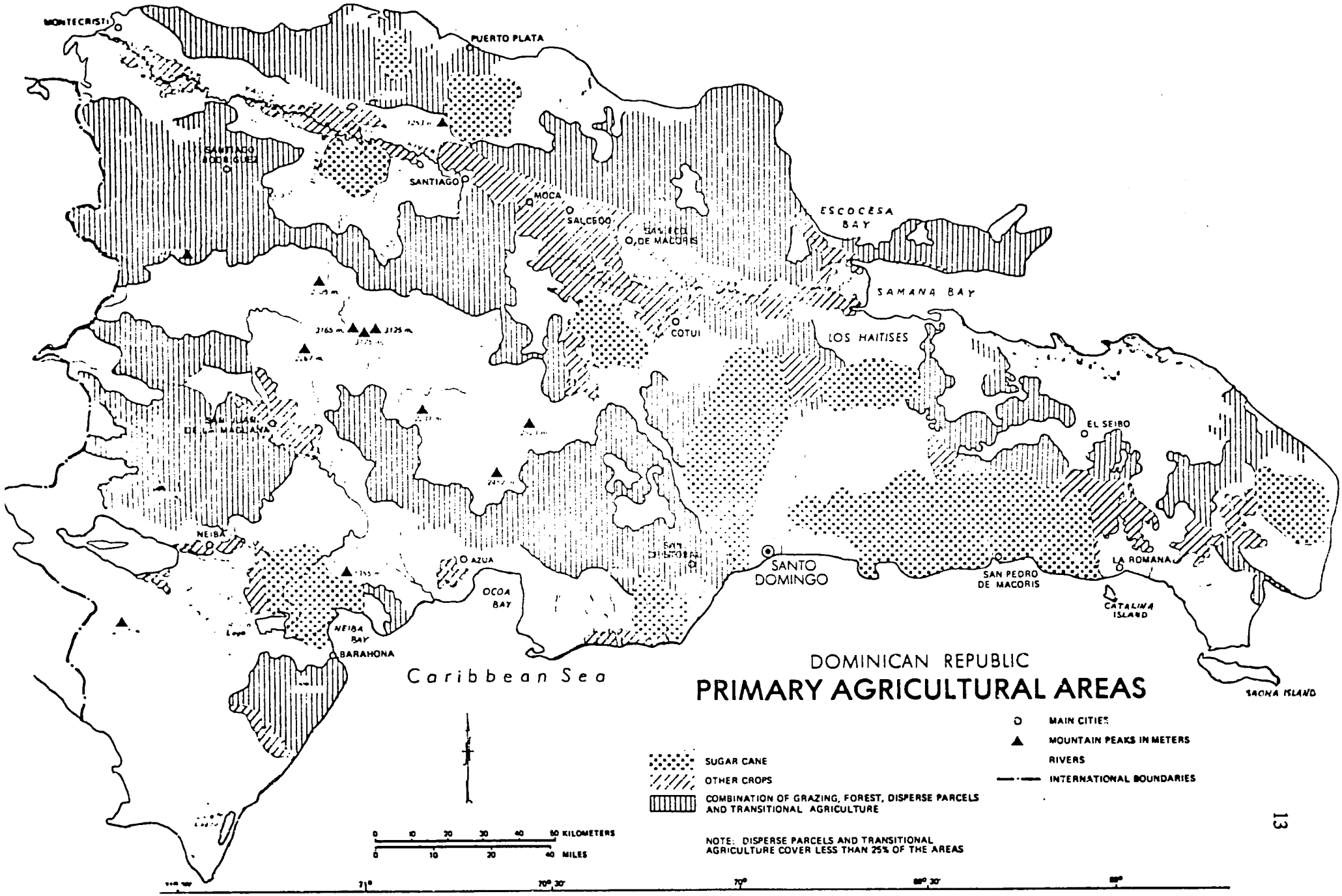

SOURCE: DOMINICAN REPUBLIC: ITS MAIN ECONOMIC DEVELOPMENT PROBLEMS. WORLD BANK, 1978.

and other crops are dispersed throughout the country, but the Cibao valley contains enough crop production to be referred to as the breadbasket of the country.

Outmigration from the rural areas is causing a gradual decrease in the population pressure on cultivated land (Table II-3). In 1960 there was 1.1 Ha. of land in cultivation for every rural inhabitant; in 1971 the total had not changed, but estimates for 1980 indicate a slight decrease to .99 Ha. and projections to 1985 indicate a decrease to .89 Ha. of cultivated land per rural inhabitant.

The eastern region in which the sugar cane plantations are concentrated has by far the highest rural population density—more than double the national average. The northwest, which contains the lower part of the Cibao valley, is second, and the southwest, which contains considerable mountain terrain, has the lowest.

TABLE II-3

CULTIVATED LAND PER RURAL INHABITANT

Tareas per Person (1 Hectare = 16 Tareas)

Region	1960[a]	1971[b]	1980[c]	1985[c]	1990[c]	2000[c]
Northwest	20.70	19.10	17.49	17.49	15.90	15.90
North	14.31	14.31	12.72	12.71	11.13	11.13
Northeast	14.31	17.49	15.90	14.31	14.31	12.72
Southwest	9.54	12.72	9.54	9.54	9.54	7.95
South	17.49	17.49	14.31	12.72	12.72	11.13
Central	17.49	15.90	14.31	12.72	12.72	14.31
East	33.39	39.75	36.57	34.98	33.39	33.39
Average	17.49	17.49	15.90	14.31	14.31	14.31

[a]1960 Agriculture Census.
[b]1971 Agriculture Census.
[c]SEAPLAN Projections.

2. *Product Shares in Agricultural Production*

Table II-4 details the relative value of major agricultural products for the year 1978. Nearly half (46.5 percent) of total agricultural production value is concentrated in export-oriented crops such as sugar, tobacco, cocoa and coffee. Fifteen major commodities make up more than 95 percent of total production value. Livestock products account for 24.5 percent of all production value and non-export oriented food crops comprise 27.7 percent of agricultural production.

TABLE II-4

AGRICULTURAL PRODUCTION VALUE FOR 1978

(10^3 $RD)

Crop	Production Value	Percent of Total
Sugar	113,758	23.7
Beef	54,696	11.4
Tobacco	43,260	9.0
Rice	42,713	8.9
Cocoa	41,790	8.7
Plantain	35,588	7.4
Chicken	27,869	5.8
Coffee	24,510	5.1
Milk	19,530	4.0
Yucca	16,425	3.4
Pork	16,100	3.3
Beans	9,560	1.9
Corn	6,789	1.4
Sweet potato	6,463	1.3
Yautia	5,493	1.1
Pigeon peas	4,077	0.8
Yam	2,834	0.5
Onion	2,508	0.5
Peanut oil	1,976	0.4
Squash	1,284	0.2
Potato	1,200	0.2
Tomato	1,150	0.2
Total	479,573	100.0

Source: SEAPLAN.

3. Technological Patterns of Production

Rice appears to be the crop in which the largest proportion of production occurs at a relatively high level of technology. Table II-5 outlines the proportions of production and percent of farms utilizing different *relative* technology levels. These levels were defined by two technological indicators (selected as proxies for overall technological level): level of mechanization and levels of fertilizer use. The data were drawn from the SEA 1977 Sector Analysis data tapes in which fertilizer and mechanization levels are estimated. The various crops require as many as seven cultivation or harvesting tasks and some of these may be mechanized in certain cases. Fertilizer use is estimated in actual quantities employed. The "high, medium and low" technologies reported in Table II-5 represent the following categories.[1]

[1]In the aggregate, the 1976 Sector Analysis Survey indicates that supplemental irrigation has a very positive impact on farm incomes. However, irrigation is not included as a technology indicator because, for the major crops, it has a low correlation with the other indicators. This is shown in Table II-6 below.

High Technology	Crops with some mechanization AND in the highest ¾ of farms ranked according to fertilizer use per Ha.
Medium Technology	Crops with some mechanization OR in the highest ¾ of farms ranked according to fertilizer use per Ha.
Low Technology	The residual.

TABLE II-5

ESTIMATED DISTRIBUTION OF PRODUCTION AND NUMBER OF FARMS BY LEVEL OF TECHNOLOGY AND CROP

Crop	% of Farms			% of Production		
	High Technology	Medium Technology	Low Technology	High Technology	Medium Technology	Low Technology
Sugar	13	38	49	32	45	23
Tobacco	17	33	50	43	27	30
Rice	37	36	27	86	12	3
Cocoa	–	2	98	–	7	93
Plantain	1	10	89	2	16	82
Coffee	–	5	95	–	13	87
Yucca	7	18	75	18	29	53
Beans	8	14	78	37	15	48
Corn	5	24	71	22	32	46
Sweet potato	2	21	77	19	25	56

Source: Part I and Part IV of Energy in the Food System, Dominican Republic: Statistical Profile, Report to Brookhaven National Laboratory, Practical Concepts Inc., August, 1980.

[1]Cont'd.

TABLE II-6

CORRELATION OF SUPPLEMENTAL IRRIGATION WITH USE OF CHEMICALS, POWER AND FARM SIZE

Principal Crops	# Obs.	Irrigated Percent Approx.			# Obs.	Non-Irrigated Percent Approx.		
		Chemicals	Power	Size		Chemicals	Power	Size
Rice	189	15 None	33 None	33 Small	95	67 None	75 None	60 Small
Sweet potato	27	100 None	100 None	100 Small	132	100 None	90 None	90 Small
Corn	61	87 None	50 None	85 Small	394	67 None	75 None	67 Small
Peanut	38	40 None	25 None	50 Small	165	45 None	33 None	45 Small
Cassava	54	95 None	90 None	75 Small	258	67 None	45 None	65 Small
Cacao	0	–	–	–	215	95 None	100 None	30 Small
Cafe	0	–	–	–	490	94 None	100 None	4 Small
Sugar Cane	0	–	–	–	32	50 None	87 None	50 Small
Coconut	7	100 None	100 None	60 Small	64	100 None	100 None	65 Small
Plantain	92	86 None	90 None	70 Small	138	95 None	98 None	58 Small

Source: Based on observations in first column of irrigated/non-irrigated tables, Part VII and Part VIII, E.F.S. D.R., Statistical Profile.

Eighty-six percent of rice production takes place under at least partially mechanized conditions and at relatively high levels of fertilization. Though rice represents only 8.9 percent of the value of agricultural production, it absorbs 17.6 percent of the fertilizer applied in the country.

In some cases the definition used to create Table II-5 makes comparisons between crops difficult. For example, the lack of mechanization in permanent crops implies that few of the production units will be classed as "high" technology. Tobacco and sugar are produced at relatively high levels of technology, largely due to high levels of fertilizer use in sugar cane and relatively high mechanization and fertilizer in tobacco. Sugar cane, which comprises 23.7 percent of the value of agricultural production, absorbs 64 percent of the total fertilizer applied in the country.[2]

4. Monetary Returns to Land Use Patterns

Small farms obtain significantly higher monetary returns per utilized hectare of land in the DR. Table II-7 relates land use to the value of production according to farm size. The inverse relationship between yield and farm size is a well known phenomenon in situations where the time structure increases the man/land ratio in small sizes; more intense cultivation, based on high applications of human energy, holds yields up.

TABLE II-7

LAND USE AND GROSS PER HECTARE INCOME*

Farm Size	Value of Production per Hectare Utilized (DR$)	Percent of Available Land in Farm Used for			
		Annual Crops (%)	Permanent Crops (%)	Cultivated Pasture (%)	Other Uses (%)
0.5 - 5 Ha.	$604	47	31	6	16
5 - 31 Ha.	323	26	24	25	25
31+ Ha.	165	8	15	46	31

Source: SEA Sector Analysis, Descriptive Analysis of Income, SEA-AID, 1979, Tables 43 and 44.
*SEA studies do not treat the 0 - 0.5 Ha. category as commercial farms.

Smaller farms are more crop intensive—78 percent of their available land is in annual or permanent crops, while the large farms have only 23 percent. Conversely, owners of larger farms put greater emphasis on livestock production. In these cases, even though returns per Ha. are quite low, the returns to a unit of labor input, especially "management," may be quite high.

[2]See J. Free and T. Foster, The Dominican Republic Fertilizer Situation, TVA. 1975.

There are two ways of measuring land productivity. The first, and most traditional, is to use a physical quantity of output per hectare. The disadvantage of this measure is that it is only useful for comparisons inside a particular crop. An alternative is to use a value of production per hectare which allows for the summing of all crops and provides a more comprehensive view of land productivity such as that found in Table II-7.

Table II-8 presents physical yields per hectare by farm size.

TABLE II-8

PHYSICAL CROP YIELDS (KGS.) PER HA.

(April 1975 – March 1976)

Crop Name	Small Farms .5 - 5 Ha.	Medium Farms 5 - 31 Hr.	Large Farms 31+ Ha.
Chili Peppers	2,734.18	2,536.65	107.93
Garlic*	23,673.09	78,526.62	–
Rice	1,920.36	2,018.91	1,634.69
Squash*	339.93	615.71	358.25
Sweet Potato	1,941.82	3,002.91	1,811.13
Onions	8,802.11	11,416.87	–
Spring Onion	3,418.18	10,822.47	–
Pigeon Peas	784.00	779.93	582.84
Red Beans	415.42	468.95	416.80
Black Beans	445.02	518.84	239.64
Corn	870.04	996.29	983.35
Peanuts	609.53	553.89	430.98
Okra	1,616.44	14,545.45	1,289.67
Yams	2,817.09	7 71.35	1,429.09
Potatoes	2,400.00	3. 00.29	–
Sorghum	1,272.73	–	–
Tobacco	827.20	917.60	520.29
Salad Tomato	3,255.78	3,608.00	–
Industrial Tomato	28,546.40	25,134.18	31,851.78
Yautia	1,320.15	1,007.13	1,321.67
Casava	1,746.98	2,021.02	1,569.31
White Beans	–	193.96	–
Millet	–	1,316.36	–
Sweet Peas	383.27	–	–
Coriander	1,654.55	–	–
Tayota*	1,454.55	14,545.45	–
Cabbage*	–	–	–
Egg Plant*	12,363.64	–	–
Sesame	163.64	–	–
Kidney Beans	349.09	–	–
Peas	14.55	–	–
Rice Seed	7.27	–	–
Cacao	239.64	229.45	287.71
Coffee	1,714.47	1,385.24	1,461.89
Sugar Cane	22,230.40	33,597.60	9,841.60
Coconuts*	2,220.80	2,639.78	1,093.45
Bananas*	14,774.33	6,782.40	5,650.76
Papaya*	936.80	612.00	727.27
Oranges*	7,763.56	18,718.55	8,322.55
Pineapple	–	727.27	–
Plantains*	3,422.11	2,377.82	1,853.89
Pasture	16.58	6.84	–
Avocado*	3,069.24	6,409.67	–
Banana (Rulo)*	2,028.65	3,030.33	–
Grapefruit*	1,487.64	2,902.18	227.27
Hemp	116.36	1,631.27	–
Mango*	101,818.11	29,090.91	–
Annatto Tree	206.04	581.82	–
Lemons	5,712.65	3,244.51	–
Palm Tree	30.33	–	–

Source: SECTOR Analysis Survey SEA-AID, 1976.
*Crops with yields in units per tarea.

Table II-9 presents the value of production per hectare by crop and farm size for April, 1975 through March, 1976.

TABLE II-9

VALUE OF PRODUCTION PER HECTARE BY CROP AND FARM SIZE

(RD$/Ha., April 1975 – March 1976)

	All Farms	.5 - 5 Ha. Small	5 - 31 Ha. Medium	31+ Ha. Large
Not Intercropped				
Rice	633.60	616.00	628.80	646.40
Sweet Potatoes	368.00	331.20	414.40	203.20
Pigeon Peas	190.40	200.00	190.40	–
Beans	361.60	278.40	419.20	316.80
Corn	148.80	150.40	161.60	126.40
Peanuts	158.40	180.80	156.80	110.40
Tobacco	929.60	785.60	1,145.60	424.00
Tomatoes	972.80	1,064.00	992.00	840.00
Yucca	382.40	396.80	409.60	300.80
Cacao	328.00	216.00	356.80	331.20
Coffee	188.80	198.40	171.20	195.20
Plantain	484.80	662.40	459.20	185.60
Intercropped				
Rice - Other[a]	294.40	182.40	456.00	–
Sweet Potatoes - Other	204.80	302.40	96.00	–
Pigeon Peas - Other	227.20	241.60	200.00	412.80
Red Beans - Corn	459.20	531.20	459.20	139.20
Beans - Other	323.20	267.20	328.00	584.00
Corn - Red Beans	334.40	593.60	196.80	121.60
Corn - Yucca	168.00	91.20	254.40	198.40
Corn - Other	289.60	204.80	321.60	318.40
Peanuts - Other	224.00	209.60	232.00	507.20
Tobacco - Other	388.80	278.40	612.80	222.40
Yucca - Pigeon Peas	624.00	732.80	361.60	793.60
Yucca - Corn	353.60	251.20	432.00	400.00
Yucca - Other	366.40	368.00	382.40	334.40
Cacao - Coffee[b]	331.20	572.80	409.60	217.60
Cacao - Other	366.40	339.20	360.00	428.80
Coffee - Cacao[b]	270.40	337.60	166.40	273.60
Coffee - Other	292.80	326.40	294.40	145.60
Plantain - Other	566.40	532.80	700.80	296.00
Rice - Corn	400.00	275.20	491.20	558.40
Corn - Pigeon Peas	276.80	256.00	233.60	627.20
Corn - Sweet Potatoes	454.40	526.40	419.20	38.40
Corn - Black Beans	321.60	280.00	308.80	371.20
Corn - Plantain	353.60	300.80	537.60	444.80
Corn - Peanuts	222.40	252.80	184.00	163.20
Yucca - Sweet Potatoes	390.40	368.00	523.20	358.40
Yucca - Peanuts	395.20	337.60	502.40	–
Coffee - Bananas	363.20	636.80	241.60	292.80
Cacao - Coffee[c]	353.60	360.00	363.20	355.20
Coffee - Cacao[c]	171.20	334.40	201.68	54.40

[a]Other - Intercropped with any crop.
[b]Refers to coffee and cacao when they are intercropped alone. The name which appears first is the principal crop.
[c]Refers to coffee and cacao when they are the primary, secondary, or tertiary crop and are intercropped with other crops. The name which appears first also appears first in the combination (refer to Appendix A).
Source: Sector Analysis Survey, 1976. Statistical Working Document #2 – Production, PRD-CULT-2.

5. Distribution of Land by Size of Farm

As in most developing countries, the DR has a very unequal distribution of land. Seventy seven percent of farms with less than 5 hectares occupy less than 13 percent of the land in farms. This smallest group contains a total of 234,943 farmers, as Table II-10 illustrates.

TABLE II-10

LAND DISTRIBUTION BY FARM SIZE IN THE DOMINICAN REPUBLIC

Farm Size	Number of Farms	Area in Farms (ha)
TOTAL	304,820	43,508,888
0 - .49 (Gardens)	49,651	194,112
.5 - 4.9 Ha.	185,292	5,400,268
5 - 9.9 Ha.	33,803	3,678,882
10 - 49.9 Ha.	28,987	9,346,640
50 - 99.9 Ha.	3,974	4,269,453
100 - 199.9 Ha.	1,791	3,955,923
200 - 499.9 Ha.	884	4,261,609
500 - 999.9 Ha.	222	2,349,770
1.000+ Ha.	216	10,052,231
	Percent of Farms	Percent of Area
TOTAL	100.0%	100.0%
0 - .49 Ha. (Gardens)	16.2	0.5
.5 - 4.9 Ha.	60.8	12.4
.5 - 9.9 Ha.	11.1	8.4
10 - 49.9 Ha.	9.5	21.5
50 - 99.9 Ha.	1.3	9.8
100 - 199.9 Ha.	0.6	9.1
200 - 499.9 Ha.	0.3	9.8
500 - 999.9 Ha.	0.1	5.4
1.000+ Ha.	0.1	23.1

Source: Republica Dominicana en Cifras, 1980. Oficina Nacional de Estadistica, p. 43.

Government programs in land reform were particularly active during the high economic growth period from 1966-1974. Between 1961 and 1978 a total of 181,000 Ha. was affected by the agrarian reform amounting to 6.6 percent of all land in farms.[3] In the period 1975-78, a total

[3]See data from the Oficina de Estadistica del I.A.D. as reported by SEAPLAN.

of approximately 28,000 Ha. was included in land reform communities. This implies continuation of a rate nearly as high as during the previous time period.

6. *Sources of Farm Revenue*

Farms in the DR obtain about half of their revenue from unprocessed crops, one-third from livestock, and about one-tenth from sales of processed agricultural products. Table II-11 outlines the distribution of farm income by farm size

TABLE II-11

SOURCES OF GROSS FARM INCOME BY FARM SIZE

April, 1975 – March, 1976

Farm Size	Total[a]		Unprocessed Crops[b]		Unprocessed Livestock[b]		Processed Products[b]	
Ha.	DR$	Percent	RD$	Percent	RD$	Percent	RD$	Percent
All Farms	2,185	100	1,164	53	773	35	248	11
Small	895	100	552	62	288	32	55	6
Medium	2,477	100	1,478	60	750	30	250	10
Large	8,602	100	3,536	41	3,691	43	1,375	16

[a]Statistical Working Document #3, Income, ING-FINC-9.
[b]Statistical Working Document #4, Credit, CRD-EMPR-1.
Source: Sector Analysis Survey, 1976.

Small farms are more dependent on crops, larger farms on livestock and farm level processing. Livestock revenues come mostly from pork and poultry on small farms and from milk and beef on large farms as indicated in Table II-12.

TABLE II-12

LIVESTOCK REVENUE BY FARM SIZE

April, 1975 – March, 1976

	All Animals		Milk Cattle		Beef and Dual-Purpose Cattle		Pork		Poultry		Draft		Other	
	RD$	Percent	RD$	Percent	RD$	Percent	RD$	Percent	RD$	Percent	RD$	Percent	RD$	Percent
Small Farms	289	100	34	12	51	18	110	38	81	28	7	2	6	2
Medium Farms	744	100	280	38	218	29	110	15	122	16	6	1	8	1
Large Farms	3,693	100	1,598	43	1,657	45	216	6	177	5	21	0.6	24	0.6

Source: SEA-AID Sector Analysis Survey, Table 24A.

7. *Agricultural Production Trends*

Table II-13 presents data on the rates of growth of gross domestic product contributions of the agricultural sector to highlight the growth patterns of food products compared with export crops.

TABLE II-13

PRODUCTION GROWTH PATTERNS FOR FOOD AND EXPORT COMPONENTS OF AGRICULTURAL PRODUCTION IN THE DOMINICAN REPUBLIC, 1973-1978

1973 = 100

Year	All Agricultural Production	Excluding Sugar	Food Products	Export Crops Sugar, Coffee Cocoa & Tobacco	Coffee, Cocoa & Tobacco
1973	100.0	100.0	100.0	100.0	100.0
1974	104.3	103.1	102.2	106.4	104.9
1975	95.9	94.9	95.7	96.2	93.2
1976	100.2	97.2	103.0	97.1	84.5
1977	103.7	101.3	103.2	104.3	97.1
1978	105.1	106.1	108.5	101.5	100.8

Source: SEAPLAN.

The food category has increased at a rate more than 3 percent higher than the sector as a whole, the export crops have only grown slightly (1.5 percent), and non-sugar exports have remained almost stable. While the growth rate of food is substantially higher than agricultural exports, the global rate was insufficient to keep up with population growth during the same five-year period, resulting in a drop in production per capita in 1978 with reference to 1973.

Table II-14 presents growth trends for each of the major agricultural and livestock products from 1973-1978, and the same patterns described in Table II-13 can be seen in more detail.

The trends in Table II-14 are in quantity terms; to complete the trend situation, Table II-15 presents the same trends in value of production terms; and Table II-16 presents trends in producer (farm level) prices for the same products.

B. *FOOD PROCESSING AND MARKETING*

1. *Food Processing*

Food processing is undertaken by three major types of establishments in the DR. Table II-17 outlines the proportions of food processing value at the farm level, in small scale establishments (4 or less workers), and in medium and large scale plants (5 or more workers).

TABLE II-14

PRODUCTION TRENDS IN MAJOR CROP AND LIVESTOCK PRODUCTS, 1973-78

(10^3MT)

Products	1973	1974	1975	1976	1977	1978	Index (1973 = 100) 1973	1974	1975	1976	1977	1978
Rice	195.80	217.45	222.55	232.70	221.75	251.55	100	111	114	119	113	128
Beans	32.00	44.05	24.85	22.25	37.10	29.20	100	138	78	70	116	91
Corn	57.05	64.95	48.05	94.65	69.75	66.90	100	114	84	166	122	95
Sweet Potato	91.70	82.85	75.70	82.60	65.60	66.95	100	90	83	90	72	73
Yucca	192.40	126.45	167.55	136.60	254.70	163.60	100	66	87	71	132	85
Potato	23.60	23.70	19.25	24.35	13.50	12.85	100	100	82	103	57	54
Plantain (10^3 Units)	42.85	42.70	34.25	41.50	32.35	43.40	100	99	79	95	75	101
Yam	30.05	30.85	31.55	32.15	32.50	26.00	100	103	105	107	108	87
Yautia[a]	41.50	45.30	36.15	40.00	45.00	40.75	100	103	82	91	102	93
Pigeon Pea	14.40	14.75	15.55	16.00	17.05	18.25	100	102	108	111	118	127
Squash	10.20	9.85	10.50	10.75	8.10	9.70	100	97	103	105	79	95
Sugar Cane	1,256.95	1,356.75	1,245.55	1,375.00	1,295.40	1,281.45	100	108	99	109	111	102
Onion	7.60	12.20	8.55	10.00	6.60	15.00	100	161	113	132	87	197
Tomato	19.50	20.05	18.60	18.25	14.60	17.80	100	103	95	99	75	91
Peanut Oil	22.05	19.85	15.45	11.70	11.20	12.05	100	90	70	53	51	55
Coffee	51.00	46.20	60.65	23.95	43.90	40.85	100	91	119	47	66	80
Cocoa	33.95	44.80	36.45	36.30	37.05	29.85	100	132	107	107	109	88
Tobacco	43.60	33.65	19.75	38.00	39.00	46.55	100	77	45	87	89	107
Milk (10^3 Liter)	12.70	13.70	12.30	12.95	13.40	13.95	100	104	93	98	102	106
Beef	49.15	49.80	44.95	48.35	44.60	51.60	100	101	91	98	101	105
Pork	12.20	12.55	12.85	13.25	13.90	17.50	100	103	105	109	114	143
Poultry	28.50	32.00	40.40	42.55	37.10	44.95	100	112	142	149	130	156

[a]No English equivalent.
Source: SEAPLAN.

TABLE II-15

TRENDS IN THE VALUE OF PRODUCTION FOR MAJOR CROP AND LIVESTOCK PRODUCTS, 1973-78

(10^3 RD$ at Constant 1973 Prices)

	1973	1974	1975	1976	1977	1978
Rice	33,247	36,923	37,789	39,512	37,653	42,713
Beans	10,477	14,422	8,136	7,285	12,147	9,560
Corn	7,120	8,106	5,997	11,812	8,705	6,789
Pigeon Pea	3,217	3,363	3,474	3,574	3,809	4,077
Sweet Potatoes	8,858	8,003	7,313	7,979	6,337	6,463
Yams	3,275	3,363	3,439	3,504	3,542	2,834
Potato	2,204	2,213	1,798	2,274	1.251	1,200
Yautía[a]	5,931	6,106	4,873	5,392	6,066	5,493
Yucca	19,317	12,696	16,822	13,715	25,572	16,425
Sugar Cane	111,366	120,208	110,356	121,825	124,018	113,758
Squash	1,350	1,350	1,890	1,432	1,072	1,284
Onion	1,271	2,040	1,430	1,672	1,104	2,508
Tomato	1,250	1,295	1,202	1,244	943	1,150
Plantain	35,547	35,014	28,085	34,030	26,527	35,588
Peanut Oil	3,616	3,255	2,533	1,918	1,837	1,976
Milk	18,480	19,180	17,220	18,130	18,760	19,530
Beef	52,099	52,788	47,647	51,251	52,576	54,696
Pork	11,224	11,546	11,822	12,190	12,788	16,100
Poultry	17,670	19,840	25,048	26,381	23,002	27,869
Coffee	30,600	27,720	36,390	14,370	26,340	24,510
Cocoa	47,530	62,720	51,030	50,820	51,870	41,790
Tobacco	30,520	23,555	13,825	26,600	27,300	43,260
TOTAL	456,179	475,638	437,619	456,801	473,229	479,573

[a]No English equivalent.
Source: SEAPLAN.

TABLE II-16
PRODUCER (FARM GATE) PRICE TRENDS
(RD$/QQ)[b]

Products	Year[a] 1973	1974	1975	1976	1978	Index (1973 = 100) 1973	1974	1975	1976	1978
Rice	8.49	8.98	11.36	15.00	11.74	100	106	134	177	138
Corn	6.24	6.61	7.75	9.30	5.74	100	106	124	149	92
Beans	16.37	17.63	22.91	25.75	28.96	100	105	137	157	177
Pigeon Pea	11.17	12.80	11.06	14.00	14.43	100	105	99	125	129
Sweet Potatoes	4.83	5.10	6.00	5.30	4.73	100	106	124	110	98
Yams	5.45	5.08	8.00	9.50	7.18	100	93	147	174	130
Potato	4.67	4.68	8.50	5.50	11.45	100	100	182	118	245
Yautía	6.74	8.98	9.00	9.30	9.08	100	133	134	138	135
Yucca	5.02	6.28	8.16	6.90	5.45	100	125	163	137	109
Sugar Cane	4.43	4.20	4.50	4.50	4.50	100	95	102	102	102
Squash	6.62	7.20	8.04	12.00	–	100	109	121	181	–
Onion	3.36	6.35	10.00	12.00	19.48	100	76	120	143	580
Tomato	3.23	3.40	4.32	4.00	7.70	100	105	134	124	238
Plantain (Units)	0.07	0.04	0.05	0.06	0.05	100	98	129	146	120
Peanut Oil	8.20	9.00	15.00	15.00	15.00	100	110	183	183	183
Milk (Liters)	0.07	0.08	0.10	0.12	0.15	100	114	143	171	214
Beef (Lbs.)	0.53	0.59	0.59	0.65	0.60	100	111	111	122	173
Pork (Lbs.)	0.46	0.53	0.54	0.55	–	100	115	117	120	–
Poultry (Lbs.)	0.31	0.36	0.39	0.42	–	100	116	126	135	–
Coffee	30.00	30.00	42.00	46.00	58.25	100	100	140	153	194
Cocoa	70.00	75.00	85.00	100.00	113.89	100	107	121	143	163
Tobacco	35.00	30.00	42.00	39.00	29.48	100	86	120	111	84

[a]1977. Data not available.
[b]1 Quintale = 50 kgs.
Source: SEAPLAN.

TABLE II-17
DISTRIBUTION OF FOOD PROCESSING BY TYPE OF ESTABLISHMENT

	10^3 RD$	Percent All Food Processing
Medium & Large Scale Plants (5+ Workers)	982,517[a]	80.3%
Small Scale Establishments (4 or Less Workers)	143,644[b]	11.7%
Farm Level Processing	97,799[c]	8.0%
All Food Processing	$1,223,960	100.0%

[a]Based on Oficina Nacional De Estadistica, Estadistica Industrial de La Republica Dominicana, 1976-77, Table 321-01 adjusted for inflation to 1978 from 1977.
[b]Based on PCI Small Scale Enterprise Survey, 1980 adjusted to 1978.
[c]Based on agricultural income from National Accounts in ONE Republica Dominicana en Citras, 1980, Table 342-02 and farm level processing share from Table II-11 above.

Medium and large scale food processing has been expanding at a relatively slow rate since 1973, as indicated in Table II-18.

Table II-19 outlines the product composition of the medium and large scale food processing sector.

Three sub-sectors (milling, sugar and edible oils) constitute 75 percent of the food processing sector in medium and large scale plants. Table II-20 contains the quantities and values of processed food products in 1977.

TABLE II-18

GROWTH INDICES FOR THE FOOD PROCESSING INDUSTRY

(Medium and Large Scale Plants: 5+ Workers)

Year	Index (1968 Production = 100)
1973	152.9
1974	148.5
1975	165.4
1976	187.7
1977	202.9

Source: ONE Estructura Industrial Table 321-04, 1980.

TABLE II-19

COMPOSITION OF FOOD, DRINKS, AND TOBACCO PROCESSING, 1977

1977, 000 RD$

Sector & Sub-Sectors	Value of Sales 10^3 RD$	Percent
Food Processing (311-312)	880,086	78.0
Drinks (313)	169,223	15.0
Tobacco (314)	79,932	7.0
All Agroindustry	1,129,241	100.0
Detail of Food Processing Sub-sector		(% of Food Processing)
Meat Processing	18,869	2.1
Milk Products	44,938	5.1
Fruit & Vegetable Processing	23,395	2.7
Oils & Fats	89,829	10.2
Milling Products	296,578	33.7
Baking Products	67,493	7.7
Sugar Refining	276,919	31.5
Cocoa and Candy	16,556	1.9
Other Food Products	25,196	2.9
Animal Feed Concentrates	20,312	2.3

Source: ONE, Estadistica Industrial de la Republica Dominicana, 1976-1977, Table 323-03, 1979.

TABLE II-20

QUANTITY AND VALUE OF PROCESSED FOOD PRODUCTS, 1977

	Quantity Sold	Value of Sales RD$
Food Products Except Drinks		880,086,435
Meat Products (Total)		18,869,433
Ham	919,208 Kg	2,289,006
Sausages	9,491,425 Kg	14,197,584
Smoked Meat	237,748 Kg	596,144
Mortadela	402,993 Kg	458,467
Salchica	778,621 Kg	1,149,074
Milk Products (Total)		44,938,074
Ice Cream	3,110,764 Kg	3,223,343
Butter	1,073,808 Kg	3,070,717
Cheese	1,445,700 Kg	4,177,456
Pasteurized Milk	47,740,767 L	16,454,848
Chocolate Milk	5,763,293 L	2,511,980
Condensed Milk	2,418 T	2,739,664
Evaporated Milk	5,788 T	5,920,282
Dried Milk	2,425 T	6,839,784
Fruit & Vegetable Processing (Total)		23,394,694
Sweetened Fruit	592,280 Kg	588,359
Fruit Juice	9,303,779 Kg	5,717,860
Tomato Juice	96,502 Kg	55,828
Guandules	4,751,161 Kg	3,685,272
Garbanzos	155,400 Kg	103,511
Tomato Paste	573,437 Kg	891,173
Spiced Tomato Paste	49,302 Kg	48,870
Ketchup	531,228 Kg	504,318
Guisantes	298,746 Kg	261,760
Habas	485,047 Kg	236,184
Edible Oils & Fats (Total)		89,829,379
Cocoa	2,404,244 Kg	3,278,155
Crude Cocoa	1,821,914 Kg	1,551,947
Peanut	28,558,098 Kg	46,778,486
Soy	12,792,883 Kg	17,237,352
Hydrogenated Oil	4,199,213 Kg	4,175,955
Margarine	3,394,690 Kg	4,914,810
Vegetable Fat	1,621,709 Kg	2,060,537
Cocoa Butter	307,314 Kg	1,763,230
Soy Cakes	20,078,020 Kg	5,940,473
Cocoa Cake	3,075,332 Kg	320,399
Peanut Cake	10,373,244 Kg	1,479,556
Milling Products (Total)		296,577,682
Rice Hulling	186,389 T	90,771,443
Coffee Hulling	59,365 T	160,285,500
Corn Flour	4,440 T	1,311,315
Wheat Flour	96,155 T	37,292,385
Semola	9,493 T	3,638,189
Alfrecho	34,306 T	3,107,335
Baking Products (Total)		67,493,266
Bread	60,603,015 Kg	37,573,869
Crackers	7,261,552 Kg	5,664,010
Pasta	22,123,285 Kg	13,862,659
Sweet Breads	1,901,878	2,043,305
Cookies	6,885,157	8,331,538
Sugar Refining (Total)		276,919,187
Crude Sugar	1,162,327 T	245,528,127
Refined Sugar	92,813 T	15,828,383
Molasses	282,320 L	15,562,677
Chocolate & Candy Products (Total)		16,556,220
Candies	6,025,630 Kg	7,409,802
Gums	1,586,798 Kg	3,811,646
Chocolate Bars	2,388,605 Kg	4,195,381
Chocolate Powder	445,616 Kg	867,454
Chocolate Candy	103,131 Kg	201,951
Candy	19,719 Kg	69,986
Other Food Products (Total)		25,195,859
Ground Coffee	5,763,350 Kg	20,011,238
Ice	45,085 T	1,115,009
Vinegar	2,118,387 L	1,092,221
Baking Powder	390,264 Kg	469,885
Salt	3,071,007 Kg	502,320
Prepared Foods	263,943 Kg	887,523
Yeast, Dry	88,627 Kg	243,069
Yeast	84,076 Kg	105,661
Spices	241,178 Kg	320,823
Concentrates	48,392	247,501
Animal Feed Concentrates		20,312,641
Feed Concentrate	98,549 T	20,312,641

Source: ONE Estadistica Industrial de la Republica Dominicana, 1976-1977, Table 323-03, 1979.

2. *Food Marketing System*

a. Disposition of Agricultural Products at the Farm Level

Table II-21 outlines the distribution of agricultural production from the farm level. Corn and plantains are the most important autoconsumption items for the farm family. Farm families consume 35 percent of the corn produced and 34 percent of the plantains. Beans (12.5 percent), sweet potatoes (17.3 percent), yautia (12.7 percent), yucca (22.4 percent), squash (19 percent) and tomatoes (13 percent) are all important subsistence crops.

TABLE II-21

DISPOSITION OF AGRICULTURAL PRODUCTION AT THE FARM LEVEL

(Percent of Total Production Entering Each Distribution Channel)

	Seed or Animal Feed	Family Con-sumption	Farm Level Process	Farm Storage Losses	Farm Level Storage	Rural In Kind Payment	Large & Medium Storage	Rural Cash Sales	Off Farm Process	Urban Cash Sales
Rice	1.4	3.7	0.0	0.1	1.9	2.6	5.7	5.6	74.6	4.6
Beans	3.9	12.5	0.0	0.1	5.1	3.9	18.6	2.4	0.0	53.5
Corn	11.8	6.0	0.0	0.2	1.1	4.9	21.7	3.6	13.9	36.8
Pigeon Pea	0.6	35.5	0.0	0.1	1.2	8.1	1.2	6.8	2.8	40.9
Sweet Potatoes	2.7	17.3	0.0	1.1	0.6	5.9	0.8	6.8	0.0	64.7
Yams	1.1	17.8	0.0	0.0	7.2	4.6	0.0	28.9	0.0	40.6
Potato	0.0	1.6	0.0	0.0	0.0	0.0	64.4	0.0	0.0	34.0
Yautía	2.1	12.7	0.0	0.0	0.0	3.0	0.0	29.7	0.0	52.5
Yucca	1.9	22.4	0.0	0.7	0.3	8.5	0.1	6.8	0.9	58.3
Squash	6.4	19.1	0.0	1.9	0.3	10.6	0.0	6.8	0.0	26.2
Onion	0.0	1.3	0.0	0.0	0.0	1.5	23.4	0.0	0.0	73.9
Tomato	0.0	13.1	0.0	14.9	0.0	9.1	6.5	18.8	1.3	36.4
Plantain	0.4	34.4	0.0	1.8	0.0	10.2	0.2	4.0	0.0	49.0
Peanut Oil	0.0	0.1	0.1	0.0	0.0	2.8	0.4	6.6	89.9	0.1
Coffee	0.0	1.3	63.8	0.0	0.3	1.8	2.6	0.8	7.0	22.4
Cocoa	0.0	0.0	99.5	0.3	0.0	0.1	0.0	0.0	0.0	0.0
Tobacco	0.0	0.2	8.5	0.1	0.7	3.4	7.2	0.0	16.8	48.8

Source: Part IV, EFSDR, Statistical Profile.

Farm level processing is important only in coffee (64 percent) and cocoa where all production is processed to some degree at the farm level. Sales directly from the farm to processing industry buyers accounts for 75 percent of rice production and 90 percent of peanuts for edible oils. A small but significant proportion (17 percent) of tobacco is sold directly to the processing plant from the farm level, and the balance is channeled through storage buyers and brokers in urban areas.

Farm level storage appears to be important only in the cases of yams and beans. In-kind payments are made with all of the subsistence crops, but the proportions are small. Corn and squash are the most important crops held for animal feed—12 percent of corn is used for this purpose. Sales to medium and large scale storage facilities are important for beans (19 percent), corn (22 percent), potatoes (64 percent), and onions (23 percent). Yams and yautia are sold directly to rural consumers at the farm level; almost one-third of total production is distributed this way. For most crops, 40-60 percent is sold at the farm level to marketing entities or sold into commercial channels through rural buyers. Onions and sweet potatoes reach markets directly from the farm in the highest proportions—65 percent and 74 percent, respectively.

Farm level storage losses are reported to be high only in the case of tomatoes, clearly the most perishable of the major products. Fifteen percent of tomato production is reported to be lost at the farm level awaiting sale.

b. Wholesale and Retail Trade in Food Products

After the first marketing step from the farm level, the marketing system networks become more complex and interrelate with first and second stage processing. The networks for the major food products are outlined in detail in Appendix C.

c. *Transportation of Food Products*

The chief mode of transportation of food products in the DR is by motorized vehicle. Approximately 50-60 percent of farm products are transported to their first market destination by truck, about one-third by animal, and 10-15 percent by human labor. Table II-22 outlines estimates of transport distance and mode for major crops. The distances and modes of transportation of food products after their first move were not available in the data identified in the DR.

TABLE II-22

TRANSPORTATION DISTANCE AND MODE FOR FARM PRODUCTION

	Predominant Distance to Primary Sale (Km)	Predominant Transport Mode Percent of Farms		
		Vehicle	Animal	Human
Rice	9.416	69	26	5
Beans	13.5	59	35	6
Corn	9.4	57	33	10
Guandul	2.5	51	41	8
Sweet Potato	2.4	61	31	9
Yucca	8.0	49	39	12
Tomato	13.5	60	18	22
Plantain	6.7	53	36	11
Peanut Oil	12.7	61	30	9
Coffee	13.0	49	35	16
Cocoa	9.9	57	30	13
Tobacco	11.8	61	32	7

Source: SEA-AID Sector Analysis Survey, Statistical Working Document, #5, 1977.

C. *FOOD CONSUMPTION AND NUTRITION*

1. *Daily Consumption and Nutritional Requirements*

The estimated daily requirements for nutrients and the actual estimates of consumption indicate significant gaps in the DR diet. Table II-23 outlines the current national average consumption and estimated daily requirements.

Caloric deficiency on the average is 20 percent and protein is 16 percent. Averages mask the severity of the nutritional problem among the poor in the DR. Table II-24 outlines these estimated deficits by major income strata.

2. *Contribution of Major Food Products to the Dominican Diet*

Rice is the most important staple, not necessarily because of its nutritional value, but mainly because it is the food most preferred by Dominicans, especially those in the rural

TABLE II-23

AVERAGE DAILY CONSUMPTION AND ESTIMATED NUTRITIONAL REQUIREMENTS

	National Average	Daily Requirements
Calories	1,862	2,305
Grams of Protein	41	49
Mg. of Calcium	33	491
Mg. of Iron	9	15.1
Mg. of Vitamin A	691	593
Mg. of Thiamine	0.66	0.9
Mg. of Riboflavin	2.29	1.27
Mg. of Niacin	10	15.2

Source: Cited in SEAPLAN.

TABLE II-24

CONSUMPTION AND NUTRITIONAL REQUIREMENTS BY INCOME LEVELS

($/Capita 1973)

		Consumption			
	Requirements	I $0-50	II $50-100	III $101-300	IV $301+
Calories	2,305	1,408	1,988	2,471	3,147
Grams of Protein	49	27.3	42.5	61	82
Mg. of Calcium	491	196	389	541	569
Mg. of Iron	15.1	7.3	8.8	10.7	13.1
Mg. of Vitamin A	595	572	745	856	902
Mg. of Thiamine	0.9	0.5	0.7	0.9	1.1
Mg. of Riboflavin	1.27	1.6	2.4	3.3	2.9
Mg. of Niacin	15.1	6.3	10.4	15.6	21.4

Source: Cited in SEAPLAN.

areas.[4] The importance of rice is even more evident when one looks at the number and value of loans made to the rice subsector by the Dominican Development Bank in 1975.[5] From

[4]For example, a 1974 sample survey of 2,100 rural households showed that 75 percent of families interviewed for the survey had eaten rice and beans during the previous day, while only 33 percent had eaten plantains and 16.2 percent, yucca; see Margaret S. Andrews and John R. Moore, "An Integrated Production – Consumption Farm Model for the Dominican Republic," Agricultural experiment Station, University of Maryland, August, 1976, p. 6.

[5]Glenn C. W. Ames, "Small Farmer Associations and Development Programs: Case of the Dominican Republic," *Land Tenure Center Newsletter*, No. 52, April-June, 1976, p. 18.

January to September, 51 loans amounting to RD$543,337 were made for rice projects; this represented 23.3 percent of the number and 28.16 percent of the value of all loans made during the period. Despite the disastrous drought which affected not only rice but all other crops that year,[6] output of rice reached almost 290,000 tons in 1977, an increase of 11 percent from 1974 and almost 33 percent from 1975.[7] This, however, was not sufficient to meet domestic demand, and INESPRE was forced to import more than 56,000 tons at a cost of RD$17.04 million (FOB).[8]

With respect to intake (grams) of the various foods, plantain leads the field in both urban and rural areas. An unpublished 1973 consumption survey by the Secretariat of Agriculture indicated that daily urban and rural per capita intake of plantains was 192 and 182 grams, respectively, compared to the figures of 160 (urban) and 174 grams (rural) for rice. An earlier survey had also indicated the dominance (intake) of plantains in the Dominican diet.[9]

Nutritionally, beans, especially kidney beans (the most commonly grown variety), are of great importance to the rural population. Among the common foods, they rank first as the available source for proteins and iron, second for calcium and thiamine, and third for riboflavin.[10] Kidney bean production was about 40,264 tons in 1977, a 10.6 percent drop from the 1976 figure and an 18.3 percent decline from the bumper year of 1974.[11] This required imports totaling 4,872 tons in 1977 in order to satisfy internal demand. Consumption in that same year amounted to 43,624 tons.

As a result of expansion in the livestock industry over recent years, feed corn has become increasingly more important. Frequently interplanted with other crops, especially beans, it is by far the primary feed[12] utilized in animal production. In 1977, corn production was only 54,152 tons—the first time since 1973 that output amounted to less than 56,000 tons.[13] While human consumption of corn since 1973 has remained relatively constant, in absolute terms, imports of corn along with animal consumption of the crop have been steadily increasing. Human consumption of corn ranged from 7,224 tons in 1973 to 8,344 tons in 1977, while the corresponding figures for animal consumption were 113,288 and 129,920 tons; and for imports—66,976 tons in 1973 and 92,400 tons in 1977.[14]

---

[6] *Encyclopedia Britannica*, "Book of the Year, 1978," p. 308.

[7] "Republica Dominicana en Cifras, 1978," *op. cit.*, p. 43.

[8] *Ibid.*, p. 72.

[9] Margaret S. Andrew, *op. cit.*, p. 5. It appears, however, that Dominicans do not distinguish between plantains and bananas; both, it seems, are referred to as plantains.

[10] "Development of Household Food Behavior Models," a report prepared for the Agency for International Development (December, 1976), Poynor International Incorporated, Silver Spring, Maryland, p. 47.

[11] Secretariat of Agriculture (SEA), "Plan Operativo, 1978," Anexo 1.

[12] In addition to corn, sweet potato, sorghum, and cassava are used to feed animals; in each year from 1973 to 1977, no more than 5.8 percent of the yearly corn supply has ever been consumed by humans; see "Plan Operativo, 1978," Anexo 1.

[13] *Ibid.*, Anexo 1.

[14] *Ibid.*, Anexo 1.

Cassava (yuca) is the major root crop in the Dominican diet. It is especially important in the diet of lower income families. Of the 183,680 tons produced in 1977, almost 172,660 tons (94 percent) were consumed locally by humans, 7,347 tons (4 percent) by animals, and only about 2 percent was exported.[15]

Tomatoes (salad), as well as industrial tomatoes, are grown in the Dominican Republic. Production occurs mostly on farms that are less than 3 hectares in size and on which relatively high levels of capital-intensive techniques are used. About 134,814 tons[16] of tomatoes were produced in 1977, most of which were industrial tomatoes (some 118,462 tons).[17]

Among oilseeds, the peanut is the most important, not only in terms of its prevalence in the Dominican diet,[18] but also because of the income it generates for some small farmers. About 48,000 tons of peanut (in shell) were produced in 1977, representing an increase of 10.2 percent over 1976, but the total was still more than 19 percent from the 1974 figure.[19] Peanut oil imports decreased steadily over the period 1973-75, but rose sharply in 1976 and 1977.[20]

Measured in calories, cereals contribute 35 percent of actual nutrition, fruits 17 percent, edible oils 13 percent, and tubers 12 percent. Table II-25 outlines caloric and protein contribution to the actual and estimated requirements for diets. Cereals also supply 37 percent of protein, while 31 percent is obtained from meat.

The largest differences between the actual and the ideal for the provision of calories in the diet lie in a desired increase in milk, pulses, and sugar, and decreases in dependence on cereals and edible oils. Protein changes call for an increase in pulses (legumes) and milk, and a decrease in cereals and meat.

The increased quantity implications of the nutritional deficiency in actual diets and the proposed consumption patterns are outlined in Table II-26, where each of the food product group consumption levels are given in pounds or other appropriate physical units.

While the percentage dependence on cereals for calories and protein is to decrease under the proposed diet, the total quantities of cereals consumed per day would increase by 8.3 percent. The largest percent increase in consumed quantities would be in pulses (legumes). One of the central propositions of the DR planners is to obtain the significant nutritional benefits of combining cereals and pulses in the diet. Increased eggs, meat, and milk are the other major deficit product expansions projected.

---

[15] *Ibid.*, Anexo 1, Table 14.

[16] "Boletin Mensual," April, 1979, *op. cit.*, p. 192.

[17] Only about 16,352 tons of salad tomatoes were produced in 1977; see "Plan Operativo, 1978," Anexo 1, Table 14.

[18] Annual per capita consumption of peanut oil in the DR is about 20 pounds; see "Diagnostico Y Estrategia Del Desarrollo Agropecuario, 1976-1986," Secretaria Del Estado de Agricultura, p. 197.

[19] "Republica Dominicana en Cifras, 1978," p. 43.

[20] "Plan Operativo, 1978," *op. cit.*, Anexo 1.

TABLE II-25

CONTRIBUTION OF MAJOR CROP AND LIVESTOCK PRODUCT GROUPS

(Existing and Proposed Diets)

	Calories		Grams of Protein	
	Required (%)	Actual (%)	Required (%)	Actual (%)
Cereals	31.2	35.38	29.3	36.71
Tuber	10.1	11.76	4.9	5.21
Sugar	10.7	8.61	–	–
Pulses	5.3	2.37	12.4	6.58
Fruits	15.1	16.99	6.8	7.79
Meat	7.2	6.13	28.5	31.30
Milk	7.8	4.88	16.2	11.28
Vegetables	1.7	0.64	0.4	0.46
Oils	10.5	13.04	–	–
Eggs	0.4	0.20	1.5	0.67
TOTAL	100.0	100.0	100.0	100.0

Source: SEAPLAN.

TABLE II-26

PER CAPITA CONSUMPTION AND DAILY REQUIREMENTS BY MAJOR FOOD GROUP

(Quantities in Pounds)[a]

	Requirements	Consumption	Deficit (%)
Cereals	0.435	0.399	(8.3)
Tuber	0.462	0.394	(14.9)
Fruits	0.705	0.621	(12.0)
Pulses	0.175	0.068	(61.4)
Meat	0.195	0.111	(43.1)
Sugar	0.140	0.092	(34.3)
Oils	0.060	0.060	–
Milk (Lit.)	2.88	1.40	(51.4)
Vegetables	0.220	0.160	(27.3)
Eggs (Units)	0.550	0.005	(91.0)

[a]These pounds are defined as being equivalent to 500 grams.
Source: SEAPLAN.

3. *Trends in Consumption of Food Products*

Table II-27 presents estimates of the change in consumption and nutrition between 1973 and 1978.

TABLE II-27

TRENDS IN CONSUMPTION AND NUTRITION

	1973	1978	Index
Value of Food Consumed (10^3 RD$)	459,674.0	464,768.1	101.1
National Total Calories/Day (10^6 Cal)	8,252.2	7,388.1	89.5
National Total Proteins/Day (10^6 gms)	181.1	156.1	86.3
Average Calories/Day/Capita	1,861.9	1,441.9	77.5
Average Grams of Protein/Day/Capita	40.9	30.5	74.6

Source: SEAPLAN.

While the total value of foods consumed increased slightly, the nutritional value of consumption decreased by slightly over 10 percent in caloric content and 14 percent in protein. When population growth is added, the nutritional picture worsens by an additional 10 percent. The total nutritional drop in the five-year period (1973-78) appears to be about 24 percent.

The trend from 1973-1978 in the apparent consumption of the major food products is outlined in Table II-28. (Apparent consumption values equal agricultural production less allowance for seed, loss, animal feed, net imports/exports, etc.)

D. *FOOD BALANCE: IMPORTS AND EXPORTS*

Based on data from the National Statistical Office, the Sector Analysis survey (SEA) (1976) and the PCI surveys (1980), we have created the 1978 food balance sheet presented as Table II-29. The format follows that for the 1968 food balance sheet as compiled by the Oficina Nacional de Estadistica (ONE). The ONE balance sheet is presented as Table II-30. During this ten-year period, few major rearrangements in the basic structure of the balance sheet have taken place.

While population increased 34 percent during the decade (1968-78), imports of cereals increased by 48 percent, resulting in an increased dependence on imports of staple food grains of 14 percent. Total production of tubers increased only slightly (5 percent), indicating a decreased supply per capita of approximately 28 percent. Except for these differences, the basic nutritional pattern remained the same.

TABLE II-28

TRENDS IN APPARENT CONSUMPTION OF MAJOR CROP AND LIVESTOCK PRODUCTS, 1973-78

(10^3 MT)

	1973	1974	1975	1976	1977	1978
Rice	240.28	269.55	287.55	272.85	277.90	255.45
Beans	45.25	45.00	28.35	23.65	40.10	29.90
Corn	6.45	6.70	7.40	9.90	8.30	5.15
Pigeon Pea	5.70	5.15	5.35	6.65	9.30	8.90
Sweet Potato	66.30	64.70	59.95	63.40	65.60	98.75
Yams	23.45	24.20	24.60	24.85	24.90	19.80
Potato	21.80	22.40	18.45	23.20	12.40	11.80
Yautia	23.45	25.05	21.30	19.40	25.15	19.15
Casava	183.60	118.10	159.60	128.80	242.75	153.15
Sugar	74.40	79.20	68.90	70.95	75.85	53.00
Squash	7.30	7.50	7.55	6.90	5.40	6.30
Onion	7.30	9.40	7.70	8.85	6.65	13.50
Tomato	15.35	15.50	15.55	14.10	11.00	11.00
Plantain (000 Units)	41.85	41.50	33.10	39.95	41.70	43.20
Peanuts (Oil)	40.45	35.40	20.35	18.65	24.95	14.60
Milk (Liters)	8.65	8.90	7.80	8.25	8.45	9.05
Beef	41.15	42.45	43.00	47.20	42.30	50.15
Pork	12.20	12.55	12.85	13.25	13.90	17.50
Poultry	29.20	33.50	39.90	41.05	40.85	41.75
Wheat	97.10	101.95	112.90	112.90	119.20	125.15
			Growth Indexes			
Rice	100	112	120	114	116	106
Beans	100	99	63	52	89	66
Corn	100	105	45	154	129	80
Pigeon Pea	100	90	94	117	163	156
Sweet Potato	100	98	90	96	99	74
Yams	100	103	105	106	106	84
Potato	100	102	85	106	57	54
Yautía	100	107	91	83	107	82
Casava	100	64	87	70	132	83
Sugar	100	106	93	95	102	71
Squash	100	103	103	95	74	86
Onion	100	129	105	121	91	185
Tomate de Mesa	100	101	101	02	72	72
Plantain (000 Units)	100	99	79	95	100	103
Peanuts (Oil)	100	88	50	46	62	36
Milk (Liters)	100	103	90	95	98	105
Beef	100	103	104	115	103	122
Pork	100	103	105	109	114	143
Poultry	100	110	137	141	140	143
Wheat	100	105	116	118	123	129

Source: Subsecretaría Técnica de Planificación Sectorial Agropecuaria.

TABLE II-29

FOOD BALANCE SHEET ESTIMATED FOR 1978

(MT)

Food Group	Production	Imports	Exports	Total Supply	Seed	Feed	Industry	Hot Food	Percent Usable	Gross Supply
Cereals	405,470	218,500	1,125	622,845	1,860	24,114	192,789	218,763	99.4%	404,082
Tubers	319,864	–	13,900	305,964	4,338	19,364	–	23,702	75.3	282,262
Sugar	1,198,956	1,222	1,000,100	200,078	–	–	–	–	99.8	200,078
Pulses	58,163	2,950	7,500	53,613	904	–	–	904	100.0	52,709
Oilseeds	74,074	100	–	74,183	–	–	–	–	64.7	74,183
Vegetables	202,714	4,496	17,650	189,560	576	31,450	–	32,026	88.4	157,534
Fruits	1,140,529	2,965	–	1,143,494	–	111,287	–	111,287	61.6	1,032,207
Meat	114,050	771	1,450	113,371	–	–	–	–	78.2	113,371
Eggs	20,430	606	–	21,036	–	–	–	–	90.8	21,036
Fish	10,216	15,540	45	25,756	–	–	–	–	84.7	25,756
Milk	279,000	20,753	–	299,753	–	–	–	–	99.1	299,753
Edible Oils	39,475	41,500	–	80,925	–	–	–	–	99.1	80,975
Drinks	58,880	1,834	–	60,714	–	–	–	–	100.0	60,714
Other	36,427	998	34,795	2,630	–	–	–	–	80.1	2,630

Sources: CEDOPEX and INESPRE as reported in SEAPLAN, Plan de Desarrollo Agropecuario, Table 6.10; "Cifras," Table 323.01, SEAPLAN Plan Nacional Cuadro 2.4; PCI, 1980 Surveys, AID-SEA 1976 Sector Analysis Survey, other sources.

TABLE II-30

FOOD BALANCE SHEET ESTIMATED FOR 1968

(MT)

Food Group	Production	Imports	Exports	Inventory Change	Total Supply	Seed	Feed	Industry	Hot Food	Percent Usable	Gross Supply
Cereals	217,960	147,257	842	–	364,375	1,000	15,400	112,785	129,185	99.4	235,190
Tubers	304,065	–	7,214	–	296,851	4,134	12,400	514	17,048	75.3	279,803
Sugar	648,575	914	604,863	88,910	133,536	–	–	–	–	99.8	133,536
Pulses	47,892	4,261	158	–	51,995	744	–	–	744	100.0	51,251
Oilseeds	53,192	82	8,454	–	44,820	2	–	20,870	20,872	64.7	23,948
Vegetables	116,446	3,363	13,602	-4,400	101,807	323	20,160	–	20,483	88.4	81,324
Fruits	1,042,849	2,128	6,048	–	1,038,929	–	71,338	–	71,338	61.6	967,591
Meat	72,836	577	5,091	–	68,322	–	–	2,480	2,480	78.2	65,842
Eggs	15,231	453	–	–	15,684	–	–	–	–	90.8	15,684
Fish	7,647	11,623	34	–	19,236	–	–	–	–	84.7	19,236
Milk	248,425	15,522	–	–	263,947	–	–	10,212	10,212	99.1	253,735
Edible Oils	27,059	8,119	–	–	35,178	–	–	–	–	99.1	35,178
Drinks	44,072	1,372	–	–	45,444	–	–	–	–	100.0	45,444
Other	27,266	747	26,025	2,048	4,036	–	–	–	–	80.1	4,036

Source: ONE, Hoja de Balance de Alimentos para la Republica Dominicana, 1971, Table 4.

Table II-31 outlines the trends in the recent past for exports and imports of food products. Coffee exports have fluctuated widely during this period, and tobacco shows similar instability. There was marked recuperation of tobacco and, to a lesser degree, cocoa exports in the last two years of the period. Sugar shows a gradual downward trend.

Food imports have fluctuated under the partial influence of drought years. In 1974 and 1976 there appears to have been a substitution of rice for corn. The estimated imports of rice in 1978 are the lowest in the last 15 years. This is due to steady, heavy emphasis on increased domestic production.

TABLE II-31

TRENDS IN FOOD IMPORTS AND EXPORTS, 1973-78

000 qq

	1973	1974	1975	1976	1977	1978
Exports						
Sweet Potato	3,800.00	3,950.00	2,600.00	5,300.00	5,950.00	7,450.00
Yams	150.00	150.00	300.00	550.00	800.00	750.00
Yautia	11,700.00	11,250.00	7,600.00	13,350.00	10,950.00	14,250.00
Casava	5,100.00	4,700.00	3,000.00	3,800.00	4,450.00	5,700.00
Pigeon Peas	6,950.00	7,850.00	8,350.00	8,300.00	6,650.00	7,500.00
Squash	2,700.00	2,150.00	2,250.00	3,150.00	2,700.00	3,400.00
Beef	8,000.00	7,350.00	1,950.00	1,400.00	950.00	1,450.00
Sugar	1,142,000.00	1,162,850.00	1,065,100.00	1,076,100.00	1,014,300.00	1,000,100.00
Coffee	38,950.00	33,650.00	27,600.00	44,450.00	48,650.00	29,650.00
Cocoa	25,400.00	29,150.00	29,550.00	26,950.00	28,350.00	30,350.00
Tobacco	34,500.00	37,550.00	14,850.00	36,350.00	21,800.00	40,100.00
Imports						
Rice	32,700.00	77,450.00	54,550.00	35,200.00	71,050.00	11,550.00
Corn	59,800.00	73,300.00	40,900.00	66,000.00	82,700.00	83,200.00
Beans (Habas)	12,250.00	2,150.00	6,100.00	6,050.00	4,200.00	2,950.00
Wheat	98,800.00	122,450.00	101,050.00	149,050.00	114,300.00	123,950.00
Peanut Oil	–	–	–	18,900.00	14,200.00	6,450.00
Cottonseed Oil	3,300.00	13,350.00	5,000.00	4,700.00	2,200.00	11,450.00
Soybean Oil	–	11,500.00	18,200.00	15,650.00	10,450.00	23,600.00
Others	450.00	550.00	450.00	–	–	–

Source: CEDOPEX and INESPRE as reported in SEAPLAN, Plan de Desarrolo Agropecuario.

PART III

PROFILES OF FOSSIL ENERGY USE IN THE FOOD SYSTEM

A. INTRODUCTION

1. Energy Policy Options in the Food System Defined

Information concerning major energy policy options is generated in this study. These options relate to what can be altered in the food system to increase its energy efficiency. In general, three possibilities are open:

- Change the mix of food products produced *and/or* consumed.
- Introduce new energy technologies which would either provide energy from new sources or would increase the conversion efficiency of existing energy sources through alteration of the mix or introduction of new end-use devices.
- Alter the relative emphasis placed on existing methods or techniques to produce a given crop.

The aim of this part is to present the basic information necessary to explore these three broad alternatives in any search for policy possibilities. Both in this part and in Part IV which follows, examples of such an exploration are given. These examples are not meant to be exhaustive, but they do lead to some specific conclusions and they do suggest how the basic fossil energy data can be manipulated to study various energy options that may be of further interest.

In the sections which follow, the first two energy profiles cover the food system from the farm level through processing and marketing stages. The third energy profile is confined to farm level production only because once a given crop has been produced at the primary level, the energy expended in the other stages of the total system should remain unchanged.

Consideration of the implications or interpretations of the fossil energy profiles is reserved mainly for Part IV, Energy Use Projections, and the Conclusions and Recommendations.

2. Sample Survey Methods for Estimating Energy Input Coefficients

To place the data presented in this section in proper perspective, it is useful to point out the strengths and weaknesses of a sample survey approach to estimating energy input coefficients. Two methods have been commonly used to estimate input coefficients for production processes whether they are for farms, industrial plants, or any other production unit. The first might be characterized as a case study or micro-study approach where a technically qualified individual studies a single (or in most cases, more than one) plant or farm in depth to estimate the inputs and outputs related to that production process. These micro or case studies are usually very comprehensive, few energy inputs are missed and care is taken to assure that the estimates properly reflect the reality of the production system. The strength of this

approach is its completeness and accuracy. The weakness of the micro or case study approach is that there is no way to know how well it represents the total population of farms or businesses. Often these case study estimates are expanded to the universe simply by multiplying them by the number of farms or plants in the country, ignoring the probable variance in the real world.

The second approach is to draw a sufficiently large number of randomly sampled farms or plants to comply with statistical requirements for reliable expansions. Usually the numbers of farms or firms required implies that as a practical matter, with limited time and money, the level of detail and care taken with each firm in a large sample survey can never approach the completeness of a micro study. The weakness of the survey method is that the details are much less complete, and the accuracy in concept and measurement at the firm level is less. The strength is that the final estimates have a much higher probability of representing the universe; the input coefficients measured from a survey should be closer to the true average than can be obtained by a case study.

These latter considerations are particularly important for energy analysis. Where the universe of farms is so large, a slight difference in the estimate of an energy coefficient at the farm level when expanded to the nation can make a large difference.

The approach followed in this study is a mix of the survey and case study approach. Where possible, estimates are based on the sample survey approach; the study team has had at its disposal an impressive set of primary field survey data. Yet many estimates have been impossible to obtain from these sources, because even the large surveys failed to provide enough observations (farms or businesses sampled) to yield reliable results, or because the particular item to be estimated was not sampled in the surveys. While the statistical utility of sample surveys is important, it should also be recognized that the strength of even the large surveys is in the ratios computed and not in the expansions of total national quantities. This point is outlined in the SEA-AID 1976 Survey Documents.[1]

Technological processes at the farm level in developing countries such as the DR exhibit vast variations. The homogeneity of technology in the U.S., for example, is very high; almost all farms are mechanized, and processes are consistent from farm to farm. By comparison, farms in the DR use cultivation methods spanning from the most rudimentary techniques used for many centuries to the most modern and mechanized. Their energy use patterns are likewise heterogenous. The survey approach is well suited to capture this diversity, but its results must be given very specific and limited meaning lest they be misunderstood. For example, the idea of energy inputs can have a very comprehensive meaning when micro-studies are used which contain very complete data. In the survey situation where the completeness of the data is limited, the definition of energy inputs must be likewise limited. In the case of pork, for example, a micro-study could perhaps estimate the quantities and energy content of family food wastes fed to the pig. In a survey this would be very difficult. A survey can measure the quantities of crops harvested and held in storage for feed, the quantities and values of purchased feed, and the costs of production (including energy) to

---

[1]SEA-AID Methodological Working Document No. 4, p. xxii, 1976.

produce forage crops. At high levels of technology the more formal sources of feed (purchased, harvested and stored for feed, etc.) will be a higher proportion of the total feed input; for small farms with only a few pigs, it is possible that almost all of the feed will come in ways not measurable in surveys. In some ways this apparent disadvantage is not really serious, since the principal interest of this particular study is not to estimate *total* energy, but rather to focus on fossil-based energy types which tend to be more measurable in the survey format. It should be borne in mind that the energy input estimates include only fuels and chemicals and are not "total" energy coefficients (except where clearly specified).

There are three important products for which the surveys fail to provide acceptable estimates because of insufficient numbers of usable observations. Two of these products, mangos and avocado, simply have been excluded from discussion because they are not large enough in value of production terms to be critical to the overall estimates, and they are not likely to use significant amounts of fossil energy. The earlier SEA-AID survey is likewise very weak with reference to sugar cane—only 32 total farms with sugar cane were included in the crop file. The SEA-AID survey systematically excluded sugar cane producers. None of PCI's supplemental surveys made any attempt to deal with sugar cane in any systematic fashion. Yet sugar cane cannot be left out of the estimates of this document in the same fashion as mangos and avocado; sugar probably utilizes much more energy than all other crops put together, and its inclusion in overall estimates is critical.

What we have chosen to do is to include some sugar estimates in this study, drawn mostly from secondary sources, but in some cases relying on the farm level technological estimates from the SEA-AID and PCI-SEA farm surveys. Wherever these surveys are used, the reliability of the sugar cane estimates is very low and are included only to round out tables and provide rough comparisons.

B. DIFFERENCES IN FOSSIL ENERGY INPUTS FOR MAJOR AGRICULTURAL PRODUCTS

1. Changing the Mix of Agricultural Products Produced

Different agricultural products require different amounts and types of energy in their production, processing, and marketing processes. It is possible to obtain the same level of value or nutrition with a wide variety of different products. One policy approach for increasing energy efficiency would be to shift the mix of products produced in the direction of more "efficient" (less fossil energy absorbing) products. In the DR there are wide differences in the total quantities and types of energy required to produce certain crops. For example, sweet potatoes, utilizing current DR agricultural technology, require almost no fossil fuels per ton, but require large quantities of human labor. These energy relationships are developed in the following sections.

2. *Farm Level Fossil Energy Input/Output Patterns*

a. Fossil Energy Inputs Into Major Agriculture Products

Table III-1 outlines estimates of fossil energy consumption at the farm level for each of 19 major food products. Except for sugar cane, these have been arbitrarily selected based on relative tonnage values or fossil energy requirements. The 19 products provide a good composite of the overall crop and livestock situation in the Dominican Republic.

TABLE III-1

ESTIMATES OF FARM LEVEL FOSSIL ENERGY INPUTS INTO MAJOR AGRICULTURE PRODUCTS, 1978

(Metric Tons X 10^6 Kcal)

	Quantity	Kcal	Share of Products Production Energy %	Value of Total Production %
Sugar Cane	11,093,637	671,294	73.30	23.7
Tobacco (Rama)	54,203	13,367	1.45	9.0
Cocoa (Grano)	36,960	790	0.09	8.7
Coffee (Cereza)	86,810	4,874	0.53	5.1
Rice	339,438	1[illegible],841	14.73	8.9
Beans	41,610	7,175	0.78	1.9
Corn	66,032	3,640	0.40	1.4
Plantain	260,000	0	0	7.4
Cassava (Yuca)	185,261	2,234	0.24	3.4
Banana	375,756	0	0	NA[a]
Sweet Potato	99,365	220	0.02	1.3
Potatoes	11,655	2,656	0.29	0.5
Tomatoes	125,607	20,448	2.23	NA[a]
Peanuts (Oil)	74,074	10,695	1.17	0.2
Onions	13,605	1,472	0.16	1.7
Total Major Crops	12,864,013	873,706	95.41	
Beef (Meat)	51,600	33,033	3.60	11.4
Milk	279,000	7,938	0.86	4.0
Poultry (Meat)	41,950	306	0.03	5.8
Pork (Meat)	17,500	765	0.08	3.3
Total Livestock	390,050	42,042	4.59	
Total Major Products	13,254,063	915,748	100.00	97.7 est.

Source: ONE, Republica Dominicana en Cifras, 1980, pp. 52 and 172; EFSDR: Statistical Profile, Part V.

Three products, rice (14.7 percent), beef (4.6 percent), and tomatoes[2] (2.2 percent) consumed 21 percent of all farm fossil energy and 77 percent of the non-sugar farm level

[2]Tomatoes in the DR are divided in most data sources between tomatoes marketed fresh, which are known as salad or table tomatoes, and industrial tomatoes. The quantities and values of these products are often confused in official data sources. For the purposes of this study, the data for fresh marketed tomatoes were used.

energy. There are only five other crops with important energy input shares. These are tobacco (1.5 percent), peanuts (1.2 percent), milk (0.9 percent), beans (0.8 percent), and coffee (0.5 percent).

Sugar cane obviously dominates energy consumption at the production level. If the BNL data are used (as in Table III-2), the 73 percent share is larger than would be estimated from survey data alone (44 percent share of farm level energy fossil energy consumption). The sugar cane energy share (73 percent) is more than three times higher than its share of the value of farm production (24 percent). The largest part of farm level energy in the DR comes from fertilizers; the secondary studies available lend support to a sugar cane energy consumption share of between 44-73 percent of all farm energy. A TVA study of fertilizer in the DR[3] indicates that 64 percent of all fertilizer in 1974 utilized in the DR was used on sugar cane. The TVA study also appears to support the estimates of energy use in major food staple crops found in Table III-2 (16 percent); it indicates that in 1974 approximately 17 percent of fertilizers were used on these major food staple crops.

Crops consume 95.4 percent of farm level fossil energy going into major products (probably at least 92-93 percent of all farm level fossil energy), yet produce only 72 percent of the value of food production. Livestock accounts for only 4.6 percent of major product fossil energy consumption, yet accounts for 24.5 percent of the value of food production. This imbalance relates partly to the energy efficiency of milk production, but more importantly to the non-fossil based energy source of most of meat production (unfertilized natural grass) and of the informal (and under measured fossil energy) in much pork and poultry production. (There is probably more under-estimation bias in the energy input data in poultry and pork than in any other food products.)

Non-sugar export crops (tobacco, coffee and cocoa) consume only 2.1 percent of major product farm level fossil energy, yet account for 23 percent of the value of farm production Cultivation of these crops depends upon considerable human energy. Fossil energy is represented by some chemicals and very low levels of fertilization; none of these crops utilize any significant mechanization.

b. Energy Productivity Ratios

There are many different ways of viewing "efficiency" of energy use. The discussion which follows presents three separate approaches. All of these approaches use a variant on the standard "productivity" ratio in which the numerator contains a measure of food output and the denominator contains the energy consumed to produce the food output. In the first efficiency measure (i) the food output (numerator) is measured in physical quantity terms in tons of food product. The weakness of this first measure is that since the energy and economic value of foods is not constant per ton of product, this measure is useful only for comparisons *inside* a particular product but has little meaning in comparisons *between* products. The second and third measures are comparable between products, the second deals with economic efficiency

---

[3] J. Free and T. Foster, The Dominican Republic Fertilizer Situation, Tennessee Valley Authority, 1975.

of energy use by measuring food in value terms, the third deals with energy efficiency and measures food in terms of its energy content.

i. Physical Input/Output Ratios for Energy Use at the Farm Level. Table III-2 presents both the physical output productivity ratio (MT/10^6 Kcal) and its reciprocal, the energy input coefficient (10^6 Kcal/MT). These ratios are readily calculated utilizing the first two columns of Table III-1.

The range in differences is dramatic; from the least efficient (beef) to the most efficient (sweet potatoes) there is a difference of almost 300 times. Beef would be even less efficient per physical ton were it not for the fact that most of its feed comes from natural pasture. Sweet potatoes are the most efficient, not because of some inherent technological characteristic of this tuber, but because it is traditionally cultivated as a subsistence crop with the use of family labor without mechanization or fertilizer. This is also the case with

TABLE III-2

PHYSICAL OUTPUT PRODUCTIVITY RATIO AND ENERGY INPUT COEFFICIENTS FOR MAJOR AGRICULTURE PRODUCTS, 1978

	Fossil Energy per Ton 10^3 Kcal	Tons of Output per 10^6Kcal of Energy
Sugar Cane	60.5	16.5
Tobacco (Rama)	246.6	4.1
Cocoa (Grano)	21.4	46.8
Coffee (Cereza)	56.2	17.8
Other Export Crops	106.9	9.4
Rice	397.2	2.5
Beans	172.4	5.8
Corn	55.1	18.1
Plantain	0	0
Cassava (Yuca)	12.1	82.9
Banana	0	00
Major Staples	116.6	8.6
Sweet Potato	2.2	451.7
Potatoes	227.9	4.4
Tomatoes	162.8	6.1
Peanuts (Oil)	144.4	7.2
Onions	108.2	8.9
Minor Crops	103.4	9.7
Total Crops	67.9	14.7
Beef (Meat)	640.2	1.6
Milk	28.5	35.1
Poultry (Meat)	6.8	137.1
Pork	43.7	22.9
Livestock	107.8	9.3
Total Agricultural Production	69.1	14.47

Source: EFSDR: Statistical Profile, Part I and Part V. Table III-1.

plantains and bananas, which are in fact the most efficient since their physical productivity ratios are infinite; they consumed no significant quantities of fossil-based energy. Poultry is extremely high due to the fact that in the sample the large majority of their feed comes from informal foraging around the farm yard and in feed from crops which themselves are grown without fuels or fertilizer. Pork is also unusually high, mostly due to the fact that the predominant feed is informal or from crops which themselves consume almost no energy in production. Seven crops were stored on farms to be used as animal feed. Almost 50 percent of the weight of this feed was in four products which were grown by these farms without any fossil based energy (plantain, copra, avocado and oranges), an additional 16 percent in products grown with very minimal energy (sweet potatoes and cassava), and the remaining third in corn, which is only an average energy consuming crop. The result is that whether the feed source of the livestock is natural grass, informal foraging, household waste, or even feed products stored explicitly for animal feed, the fossil-based energy input is minimal.

The four major sub-groups (excluding sugar cane) are surprisingly equal in physical output per Kcal of energy—non-sugar export crops 9.5, major staples 8.6, minor crops 9.7, and livestock 9.3. Rice has the highest energy inputs per ton of product at 397,000 Kcal/ton. Lower by almost half are tobacco (246 Kcal/t), potatoes (228 Kcal/t) and beans (172 Kcal/ton). Given the differences in the physical measures of these products, differences in economic value and energy content per ton, the physical energy ratios in Table III-2 are not really useful for policy or analytical purposes.

ii. Economic Efficiency of Energy Use in Major Products. There could be at least three ways of looking at the economic efficiency of energy use and for making comparisons between crops. These three could be characterized as "average gross economic productivity" of energy ($\frac{\text{Value of Output/Unit}}{\text{Energy Input/Unit}}$), "average net private profitability of energy" ($\frac{\text{Av. Farmer Profit}}{\text{Energy Input/Unit}}$), and "marginal economic productivity of energy" ($\frac{\Delta\ \text{Profit/Unit}}{\Delta\ \text{Energy/Unit}}$). The "average gross" measure would be based on the assumption that the gross market value of a product at market equilibrium is the measure of its true economic value. By dividing the value of the product by its energy input we would therefore have a rough measure of the energy cost of creating one unit of economic value and hence have a measure of utility which would allow for comparisons between food products. The "average net" measure would measure the energy consumed per unit of economic profit to the farmer. This measure would indicate the private financial efficiency on the average of energy use. The "marginal" measure would tell us how productive the "last" energy input was in creating additional profits, and would tell us therefore which of the food products could "afford" more energy at any assumed or given energy price.

Given the interest of this study in overall economic benefits and not simply on private profits, the measure chosen for discussion is the "average gross economic productivity" of energy utilization. Table III-3 contains this ratio. Data for the numerator can be found in Table II-16 (1978). Column one of Table III-2 forms the denominator.

The underestimation bias (fossil fuel energy) has already been noted for poultry and pork meat. Nevertheless, poultry is one of the most efficient of the 19 major products based on the economic standard or index of efficiency.[4] Poultry is equaled or followed by cocoa

[4]There are serious limitations on drawing conclusions from simple comparisons of the two ratios. For example, since very little of the poultry in the DR is actually fed, the energy in the food that is consumed by poultry is hard to measure. Therefore only the energy that can be calculated, that contained in grains that were used to feed poultry, is contained in the ratio.

TABLE III-3

RD$ OF OUTPUT PER 10^3Kcal OF FOSSIL-BASED ENERGY INPUT FOR MAJOR PRODUCTS AT THE FARM LEVEL

Sweet Potato	43.0	Sugar Cane	0.4
Potatoes	1.0	Tobacco (Rama)	2.4
Tomatoes	1.0	Cocoa (Grano)	106.4
Peanuts (Oil)	2.1	Coffee Cereza	5.4
Onions	3.6		
		Rice	0.6
Beef (Meat)	1.9	Beans	3.4
Milk	5.3	Corn	2.1
Poultry (Meat)	132.4	Plantain	+
Pork	25.6	Cassava (Yuca)	9.0
		Banana	+

Source: EFSDR: Statistical Profile, Part VI.

(an export crop) and by sweet potatoes, a subsistence staple. Beef requires (even at DR low levels of energy input into pasture) 70 times as much fossil energy to create a dollar of output as poultry. It should be remembered that these ratios apply to what currently exists on the average in the DR rural sector and not what could be replicated on a commercial scale. Yet these findings have important possible policy implications for planning in the DR. Certainly the production of additional poultry up to the limits of consumption demand, and to the limits of the availability of informal forage food waste and low energy feeds could force poultry prices down and perhaps cause shifts in consumption out of beef. For every dollar of shift in production and consumption from beef to enough poultry to obtain equal nutrition, there would be a savings of more than 1000 Kcal of fossil energy input. The feasibility of such policy choices is not the direct subject of this study; our objective is to create the analytical information necessary to envision what the energy impacts of such shifts would be. The projections analysis will explore the implications of some of these possible product substitutions (Part IV).

Inside the grains there are significant differences—rice produces by far the least value of product per Kcal of fossil energy. As would be expected, the subsistence crops have high value of output per energy unit. These crops, however, have low income elasticities of demand, which indicates that as income continues to grow there will be relatively less of these products consumed. The potential for substituting these subsistence crops for less efficient food staples therefore is small.

iii. Efficiency of Energy Output in Major Agriculture Products. The third method of examining energy use efficiency for food production is to create a ratio with energy values of the product in the numerator and energy inputs in the denominator. Two types of these ratios are presented in Table III-4. The first ratio, called the fossil energy ratio, contains only fossil based energy inputs in the denominator. The second, called the total energy ratio, includes an energy measure of the human labor and animal power expended in the production

process. The human and animal labor input have been converted to Kcal of energy by computing the fuels required to mechanically replace the human and animal work.

TABLE III-4

EFFICIENCY OF ENERGY OUTPUT/INPUT FOR MAJOR AGRICULTURE PRODUCTS AT THE FARM LEVEL

Cocoa	Fossil Energy Output/Input Ratio	Total Energy Output/Input Ratio
Cocoa (Grano)	141.1	22.2
Coffee (Cereza)	6.0	3.3
Rice	9.3	8.3
Beans	19.9	19.8
Corn	63.9	19.1
Cassava (Yuca)	273.7	33.3
Sweet Potato	452.3	9.8
Potatoes	3.4	2.5
Tomatoes	1.4	0.5
Peanuts (Oil)	38.1	13.5
Onions	3.4	2.0
Beef (Meat)	4.6	4.2
Milk	20.4	18.3
Poultry (Meat)	124.3	42.5
Pork	52.2	16.4

Source: EFSDR: Statistical Profile, Part VI.

In addition, plantains and bananas are not included in Table III-4 because available survey data do not show fossil fuel energy inputs and there is no way to calculate a ratio. Presumably "true" ratios would be quite high and may be higher than the highest shown in the table (especially in the case of plantains).

Three food crops have relatively high fossil energy efficiency ratios–sweet potatoes, cassava, and poultry. The reason for this is obvious–at average DR production technology for these products, labor is almost the only energy input. Two of these products have limited consumption expansion potential due to a low income elasticity of demand. Both cassava and sweet potato are traditional subsistence crops; as incomes expand, families prefer to purchase a smaller proportion of their diets in these crops. Poultry, however, is a high quality nutrition source with a reasonably high income elasticity and a favorable demand future. The possible difficulty with poultry is that even though the average technology is energy efficient, it is possible that modern poultry feed technologies may be able to compete economically and prevent expanded demand from being satisfied via traditional and energy efficient rudimentary technology.

Major food grains show a wide variation on fossil energy efficiency, but much less difference in total efficiency, indicating a simple labor and animal substitution process. Rice, by far the most " technified" of the grains, has the lowest fossil fuel energy efficiency, half that of beans, and one-seventh that of corn. When labor and animal power are added to the

energy use, the three grains come much closer in energy efficiency, corn and beans are almost the same (19.1 and 19.8), and rice is only slightly different than for fossil energy efficiency at 8.3.

Of the other major food staples, plantains and bananas are clearly the most efficient since they use no measurable fossils. Behind them come cassava and sweet potatoes (274 and 452). Potatoes, tomatoes, and onions are significantly lower in both fossil and total energy efficiency than the other minor crops, but also less than one-third as efficient as the basic food grains. Peanuts for oil lie in an efficiency position similar to the basic food grains.

Behind poultry, two other livestock products have very favorable positions. Pork production has much in common with poultry in an energy sense. Its feed inputs are either informal or they require little energy to produce (corn, tubers, and fruit), its consumer demand and even export potential are both good, and it absorbs labor resources which are probably not drawn away from other productive employment. All of that which was said earlier about poultry could be repeated for pork, with lower magnitudes of potential energy benefits, since pork is two and one-half times less energy efficient. But pork is four times (total) and ten times (fossil) as energy efficient as beef and is only slightly less efficient in total energy than milk.

The energy efficiency of milk changes very little from the fossil ratio to the total, indicating that the inherent efficiency of the process lies in its physical conversion ratio and not in the substitution of labor and animal power for fossil energy. For milk, the total energy ratio is 90 percent of the fossil energy ratio, compared with pork where the total energy ratio is only 31 percent of the fossil ratio. The fact that beef drops very little between these two ratios is due to the low incidence of labor as a factor in beef production. What this implies about milk is that it is a very attractive energy saving source of nutrition and income, but the attractiveness is not significantly increased by having a large supply of available labor; i.e., there is no comparative energy advantage which would allow the DR to consider exports as a way of tapping the milk energy potential; the capital costs of milk production are substantial and the DR is relatively capital scarce. While it needs to conserve on energy, it is also short on investment capital, and milk, while attractive from the energy perspective, is relatively capital intensive vis-á-vis poultry, for example.

3. Energy Use Patterns in Food Processing, Marketing, Storage and Transportation

a. Data and Definitions

The data for energy estimates for processing, marketing and transportation come from three basic primary data sources. The first source is data from the PCI-SEA Rural Energy Survey, 1980. These data provide energy input and end use device information for small scale processing and marketing. Farm level processing information comes from the SEA-AID Agriculture Sector Analysis Survey, 1976. Large scale processing information comes from ONE's Industrial Survey, 1977. Large scale marketing estimates are not based on any large primary data source and are consequently weak compared to the other estimates. Considerable secondary data (some of it based in turn on small field surveys) on marketing were drawn

from SEA's Diagnostico del Sistema de Mercadeo Agricola en Republica Dominicana (1977). Transport information is based on data from the SEA-AID Agriculture Sector Analysis Survey, 1976, for the transportation from the farm to the first marketing or processing destination. Transport after the first marketing point is assumed to be a part of the marketing function and not broken out as a separate transport activity.

b. Total Energy Use in Processing, Marketing and Transportation for Major Food Products

Table III-5 presents the energy use by major food product for processing, primary transport, and marketing-2nd transport-storage.

TABLE III-5

SUMMARY OF FOSSIL ENERGY USE IN FOOD PROCESSING, MARKETING, STORAGE AND TRANSPORTATION BY PRODUCT, 1978

(10^6 Kcal)

	Primary Transport	Processing				Marketing Storage and 2nd Transport			Total Processing Market and Transport Energy
		Med. and Large	Small	On Farm	Total	Small	Large	Total	
Sugar Cane	81,623	1,206,190	322,982	55,973	1,585,145	210,974	1,669,026	1,880,000	3,546,768
Tobacco (Rama)	236	7,695	2,499	0	10,194	58	3,044	3,102	13,532
Cocoa (Grano)	0	13,445	965	0	4,410	31	2,634	2,665	7,075
Coffee (Cereza)	147	11,359	3,176	48,715	63,250	1,055	5,541	6,596	69,993
(Export Crops)	82,006	1,228,689	329,622	104,688	1,662,999	212,118	1,680,245	1,892,363	3,637,368
Rice	1,535	15,076	4,208	0	19,284	8,071	14,384	22,455	143,274
Beans	198	0	0	0	0	799	1,420	2,219	2,417
Corn	213	3,876	361	0	4,237	3,497	6,214	9,711	14,161
Plantain	377	0	0	0	0	3,416	6,069	9,485	9,862
Cassava (Yuca)	358	0	0	0	0	2,934	5,214	8,148	8,506
Banana	570	161	48		209	5,317	8,962	14,279	15,058
(Major Staples)	3,251	19,113	4,617	0	23,730	24,034	42,263	66,297	93,278
Sweet Potato	224	0	0	0	0	1,956	3,098	4,854	5,078
Potatoes	41	71	24	0	95	306	544	850	986
Tomatoes	499	3,516	985	0	4,501	2,000	3,555	5,555	10,555
Peanuts (Oil)	431	47,551	15,040	0	62,591	1,968	3,178	5,138	68,160
Onions	57	420	132	0	552	1,341	604	945	1,554
(Minor Crops)	1,252	51,558	16,181	0	67,739	4,403	9,761	14,164	83,155
Beef (Meat)	0	8,172	2,590	0	10,762	1,917	2,785	4,702	15,464
Milk	1,505	49,244	15,586	0	64,830	10,015	14,552	24,567	70,902
Poultry (Meat)	0	0	0	0	0	1,559	2,263	3,822	3,822
Pork	0	10,142	3,202	0	13,344	630	915	1,545	14,889
(Livestock)	1,505	67,558	21,378	0	88,936	14,121	20,515	34,636	125,077

Source: Appendix D.

i. Processing. For all food products (including sugar), the proportion of energy which is consumed at the processing level is 42.1 percent.

For the major food staples, processing consumes about 20 percent of the total energy required to produce, process, market and distribute these food products to the consumer. This is in sharp contrast to the export crops, which consumed more than half of the total energy in processing. Minor crops on the average consumed 58.5 percent of their total energy in processing principally due to the high energy consumption of peanut oil processing and the low use of energy at the farm level in many of these crops. Livestock products utilized 53 percent of their total energy in processing largely due to the high levels of processing in milk and pork.

The distribution of processing between the three levels, on-farm, small scale, and medium-large scale, is outlined in Table III-5. For all products (including a provisional estimate for sugar cane), 74 percent of the processing energy was utilized in the medium and large scale food processing plants. Small scale processing enterprises (with less than 5 workers) utilized 20 percent and on-farm processing only 6 percent of the processing energy. On-farm processing was only important in the cases of sugar cane (where single, small "mills" were used to produce crude sugar "cake") and coffee (where farm level drying and hulling are common).

Given the fact that many coffee farms are in fact large plantations, the coffee processing which takes place on the farm often employs more than five workers and would therefore be considered medium or large scale.

Medium and large scale processing energy (excluding sugar) is utilized 14 percent by the other export crops, 12 percent by major food staples, 32 percent by minor food crops, and 42 percent by livestock products. The largest energy consuming products for the medium and large scale processing sector are milk products (30.6 percent), peanut oil processing (29.6 percent) and rice milling (9.4 percent). These three products alone consume 70 percent of all non-sugar medium and large scale processing energy. Other important energy consumption for processing occurred in pork (ham, sausage, etc.) and beef products, and in the non-sugar export crops, coffee and tobacco.

The PCI-SEA rural energy survey (1980) provided energy input ratios for small scale processing, but did not contain enough observations of small scale processing firms for each of the 18 products to allow for accurate expansions at this level of detail. For this reason, the overall small scale processing share has been included in the summary table at the same proportion of large scale for all sectors.

ii. Marketing, Transport and Storage. The marketing, transport, and storage stages of food production and distribution consumed approximately 47 percent of the total fossil energy in the major crop system. Estimates for this sector are weaker statistically than for either production or processing. The PCI-SEA small scale enterprise surveys provide reasonably reliable data for energy input coefficients into the small scale marketing activities, but the expansions of these data to the national level are substantially less reliable. The difficulty is in obtaining control totals to use for medium and large scale marketing. As in most sample survey situations, if the control totals are known from a census or other comprehensive listing, the detailed ratios obtained in the sample can be expanded with considerable confidence; but where such totals are themselves unavailable, the expansions must be treated with reserve.

The marketing, transport and storage functions have been divided into four sub-sectors for this study. Farm level storage is one of these sectors, but is not included in Table III-5 because the energy used (if any) was not reported in the surveys used for the study. Primary transport is that transportation to the first marketing or processing point from the farm.

Primary transport consumed 4.5 percent of the marketing transport and storage energy for the major staples, about 9 percent for the minor crops, and about 5 percent for livestock. The higher proportion of the minor crops is due to the fact that in the low energy non-processed crops (like potatoes and sweet potatoes), transport represents a larger proportional cost. Primary transport energy was utilized 6 percent in non-sugar export crops, 51 percent in major staples, 19.5 percent in minor food crops, and 23.6 percent in livestock. The total energy consumed in primary transportation represented between 1 and 2 percent of the total non-sugar energy consumed in the food system.

Large scale marketing energy was consumed mostly in major food staples (49.7 percent), livestock consumed 24.3 percent, minor crops 12.8 percent, and non-sugar export crops 13.2 percent. Milk was the largest energy consumer for large scale marketing, 17.2 percent, followed by rice, 16.9 percent. It should be remembered that marketing is taken to include all secondary transportation and storage as well as marketing functions.

Small scale marketing energy was consumed predominantly in the major food staples category (53 percent) and livestock products (31 percent). Small meat stores and "tiendas" handled important proportions of sales and quasi-processing functions (like slaughter and baking) for many of the basic food products. Only 2.5 percent of the small scale energy is consumed in non-sugar export crops, and there the marketing is not for export but for local distribution of these commodities for domestic consumption.

4. Total Fossil Energy Use in the Food System

a. Summary of Fossil Energy Use in the Food System by Major Agriculture Product

Table III-6 outlines total fossil energy use in the food system for each of the major food products except sugar.

b. Pattern of Total Fossil Energy Use by Major Agriculture Product

Tables III-7 and III-8 illustrate the pattern of fossil energy utilization by the selected major agricultural products. This is accomplished by presenting Tables III-1 and III-2 in percentage terms. Table III-7 distributes the total food system fossil energy utilized by each crop according to various stages in which it is expended. For example, the total fossil fuel energy utilized by beans, 9,557 x 10^6 Kcal (Table III-6) is distributed 2.1 percent to primary transport, 43.2 percent processing, 49.2 percent to marketing and storage, and 5.5 percent to produce the basic crop at the farm level (Table III-7).

Table III-8 shows in its vertical columns the way fossil energy absorbed at each stage of the agricultural system is distributed. For example, all of the selected major crops, excluding sugar cane, utilize about 76 percent of the fossil energy expended in major product primary transport; they require over 50 percent of all the fossil energy required for secondary transport, marketing and storage of the major crops selected for study, etc.

TABLE III-6

SUMMARY OF TOTAL ENERGY USE IN THE FOOD SYSTEM

(Sugar Excluded)

	Total Food System Energy Use 10^6 Kcal, 1978						Total Food System Fossil Fuel Energy 10^3 Kcal/MT
	Primary Transport	Food Processing	Marketing, 2nd Transport & Storage	Total Processing Market & Transport Energy	Total Production Energy Farm Level	Total Energy	
Tobacco	236	10,194	3,102	13,532	13,367	26,899	493.6
Cocoa (Grano)	0	4,410	2,665	7,075	790	7,865	212.8
Coffee (Cereza)	147	63,250	6,596	69,993	4,873	74,866	862.4
(Export Crops)	(383)	(77,854)	(12,363)	(90,600)	(19,030	(128,660	–
Rice	1,535	19,284	22,455	43,274	134,808	178,082	525.6
Beans	198	0	2,219	2,417	7,140	9,557	229.7
Corn	213	4,237	9,711	14,161	3,635	17,796	269.5
Plantain	377	0	9,485	9,862	6	9,868	38.0
Cassava (Yuca)	358	0	8,148	8,506	2,231	10,737	58.0
Banana	570	209	14,279	15,058	0	15,058	40.1
(Main Staples)	(3,251)	(23,730)	(66,297)	(93,278)	(147,820)	(241,098)	–
Sweet Potatoes	224	0	4,854	5,078	219	5,297	53.3
Potatoes	41	95	850	986	2,421	3,407	292.3
Tomatoes	499	4,501	5,555	10,555	17,895	28,450	226.5
Peanuts (Oil)	431	62,591	1,960	64,982	10,640	75,622	1,020.9
Onions	57	552	945	1,554	1,444	2,998	220.4
(Minor Crops)	(1,252)	(67,739)	(14,164)	(83,155)	(32,619)	(115,774)	–
Beef (Meat)	0	10,762	4,702	15,464	33,034	48,498	939.9
Milk	1,505	64,830	24,567	90,902	7,938	98,840	354.3
Poultry (Meat)	0	0	3,822	3,822	306	4,128	98.4
Pork	0	13,344	1,545	14,889	775	15,664	895.1
(Livestock)	(1,505)	(88,936)	(34,636)	(125,077)	(42,053)	(167,130)	–
TOTAL AG.	6,391	258,259	127,460	392,110	244,375	636,985	–

Source: Table III-5 and Table III-1.

c. Energy Efficiency for Major Food Products in the Total Food System

The ability of crop and livestock activities to use energy may be viewed in at least two ways. First is their efficiency in creating additional human nutrition. Since the same quantity of calories may be purchased in two goods, one costing far less than the other, tastes and preferences must enter to modify the simple valuation of food at its nutritional content. One way of valuing food is to use its market price as an indication of the interaction of consumer preferences and supply possibilities. Consumers may be irrational in their valuation of foods; they may pass by cheaper nutrition and purchase higher cost foods. It would be unwise, however, to ignore their exhibited valuation of the food in assessing efficiency, since the consumer is likely to continue to purchase in more or less the same fashion as currently exists. Two measures to assess energy efficiency have already been described and estimated for fossil energy expended at the farm level. In the following tables we estimate the same ratios for fossil energy expended on the selected 19 major crop and livestock products after they have

TABLE III-7

DISTRIBUTION OF FOSSIL ENERGY USE IN THE TOTAL FOOD SYSTEM

(Percentage Share of Kcal Utilized at Each Stage of the Agriculture System by Major Agriculture Product)

	Primary Transport	Processing				Marketing, Storage and 2nd Transport			Processing Market and Transport Energy	Farm Level Production Energy	Total Energy
		Med. & Large	Small	On Farm	Total	Small	Large	Total			
Sugar Cane	2.2%	32.3%	8.6%	1.5%	42.4%	5.6%	44.6%	50.2%	94.8%	5.2%	100.0%
Tobacco (Rama)	0.9	28.8	9.3	0	38.1	.2	11.4	11.6	50.6	49.4	100.0
Cocoa (Grano)	0	43.8	12.3	0	56.1	.4	33.5	33.9	90.0	10.0	100.0
Coffee (Cereza)	0.2	15.2	4.2	65.1	84.5	1.4	7.4	8.8	93.5	6.5	100.0
(Export Crops)	2.1	31.9	8.6	2.7	43.2	5.5	43.7	49.2	94.5	5.5	100.0
Rice	.9	8.4	2.4	0	10.8	4.5	8.1	12.6	24.3	75.7	100.0
Beans	2.1	0	0	0	0	0	8.4	14.8	25.3	74.7	100.0
Corn	1.2	21.8	2.0	0	23.8	19.7	34.9	54.6	79.6	20.4	100.0
Plantain	3.8	0	0	0	0	34.6	61.5	96.1	99.9	.1	100.0
Cassava (Yuca)	3.3	0	0	0	0	27.3	48.6	75.9	79.2	20.8	100.0
Banana	3.8	1.1	0.3	0	1.4	35.3	59.5	94.8	100.0	0	100.0
(Major Staples)	1.3	7.9	1.9	0	9.8	10.0	17.5	27.5	38.7	61.3	100.0
Sweet Potato	4.2	0	0	0	0	33.2	58.5	91.6	95.9	4.1	100.0
Potatoes	1.2	2.1	.7	0	2.8	8.9	16.0	24.9	28.9	71.1	100.0
Tomatoes	1.8	12.3	3.5	0	15.8	7.0	12.5	19.5	37.1	62.9	100.0
Peanuts (Oil)	0.5	60.3	19.1	0	79.4	2.5	4.0	6.5	86.5	13.5	100.0
Onions	1.9	14.0	4.4	0	18.4	11.4	20.1	31.5	51.8	48.2	100.0
(Minor Crops)	1.1	43.3	13.6	0	56.9	5.4	9.2	14.6	72.6	27.4	100.0
(TOTAL CROPS)	2.1	30.9	8.3	2.5	41.7	5.7	41.2	46.9	90.6	9.4	100.0
Beef (Meat)	0	16.9	5.3	0	22.2	4.0	5.7	9.7	31.9	68.1	100.0
Milk	1.5	49.8	15.8	0	65.6	10.2	14.7	24.9	92.0	8.0	100.0
Poultry (Meat)	0	0	0	0	0	37.8	54.8	92.6	92.6	7.4	100.0
Pork	0	64.8	20.4	0	85.2	4.1	5.8	9.9	95.1	4.9	100.0
(Livestock)	0.9	40.4	12.8	0	53.2	8.4	12.3	20.7	74.8	25.2	100.0
TOTAL	2.0	31.2	8.5	2.4	42.1	5.9	40.1	46.0	90.1	9.9	100.0

Source: Table III-5 and Table III-1.

TABLE III-8

PATTERN OF MAJOR AGRICULTURE PRODUCT FOSSIL FUEL ENERGY USE WITHIN EACH STAGE OF THE TOTAL AGRICULTURE SUPPLY SYSTEM

(Percentage Share of Kcal Utilized by Each Major Product)

(Excluding Sugar Cane)[a]

	Primary Transport	Processing				Marketing, Storage and 2nd Transport			Processing Market and Transport Energy	Total Production Energy	Total Energy
		Med. & Large	Small	On Farm	Total	Small	Large	Total			
Tobacco (Rama)	3.7%	4.8%	5.1%	0%	3.9%	0.1%	3.6%	2.4%	3.4%	5.5%	4.2%
Cocoa (Grano)	0	2.1	2.0	0	1.7	0.1	3.1	2.0	1.8	0.3	1.2
Coffee (Cereza)	2.3	7.1	6.5	100.0	24.6	2.3	6.5	5.0	17.7	2.0	11.8
(Export Crops)	6.0	14.0	13.6	100.0	30.2	2.5	13.2	9.4	22.9	7.8	17.2
Rice	24.1	9.4	8.6	0	7.5	17.8	16.9	17.2	10.9	55.9	28.0
Beans	3.1	0	0	0	0	1.7	1.7	1.7	0.6	3.0	1.5
Corn	3.3	2.4	0.7	0	1.6	7.7	7.3	7.4	3.6	1.5	2.8
Plantain	5.9	0	0	0	0	7.5	7.1	7.3	2.5	0	1.5
Cassava (Yuca)	5.6	0	0	0	0	6.4	6.1	6.2	2.2	0.9	1.7
Banana	8.9	0.1	0.1	0	0.1	11.6	10.6	10.9	3.8	0	2.4
(Major Staples)	50.9	11.9	9.4	0	9.2	52.7	49.7	50.7	23.6	61.3	37.9
Sweet Potatoes	3.5	0	0	0	0	3.8	3.6	3.7	1.3	0.1	0.8
Potatoes	0.6	0	0	0	0	0.7	0.6	0.7	0.2	1.0	0.5
Tomatoes	7.8	2.2	2.0	0	1.7	4.4	4.2	4.3	2.7	7.4	4.5
Peanuts (Oil)	6.7	29.6	30.9	0	24.2	4.3	3.7	3.9	17.2	4.4	12.4
Onions	0.9	0.3	0.3	0	0.2	0.7	0.7	0.7	0.4	0.6	0.5
(Minor Crops)	19.5	32.1	33.2	0	26.1	13.9	12.8	13.3	21.8	13.5	18.7
(TOTAL CROPS)	76.4	58.0	56.2	100.0	65.5	69.1	75.7	73.4	68.3	82.6	73.8
Beef (Meat)	0	5.1	5.3	0	4.2	4.2	3.3	3.6	3.9	13.7	7.6
Milk	23.6	30.6	31.9	0	25.1	21.9	17.2	18.9	23.0	3.3	15.5
Poultry (Meat)	0	0	0	0	0	3.4	2.7	2.9	1.0	0.1	0.6
Pork	0	6.3	6.6	0	5.2	1.4	1.1	1.2	3.8	0.3	2.5
(Livestock)	23.6	42.0	43.8	0	34.5	30.9	24.3	26.6	31.7	17.4	26.2
TOTAL	100.0%	100.0%	100.0%	100.0%	100.0%	100.0%	100.0%	100.0%	100.0%	100.0%	100.0%

[a]Sugar cane is excluded from this table because the relatively large amounts of energy used in the agricultural system for sugar cane production would overwhelm the amounts used by other crops and make it difficult to see the use patterns.

Source: Tables III-5 and III-1.

moved through the entire production processing and handling system. One measure is Kcal of energy output per Kcal of fossil energy input. The second is a measure of the value in money terms paid for the food divided by the Kcal of energy required to produce and market it.[5]

Table III-9 contains calculations of these ratios for major food products, and ranks results by "efficiency level."

TABLE III-9

OVERALL FOSSIL ENERGY USE EFFICIENCY OF MAJOR FOOD PRODUCTS

Efficiency of Energy Input/Output		Economic Efficiency of Energy Input	
Product	Kcal Output/Kcal of Fossil Energy Input	Produce	$ of Output per 10^3 Kcal of Input
Highest Efficiency Foods		Highest Efficiency Foods	
Cassava	56.8	Poultry	9.78
Sweet Potatoes	49.7		
High Efficiency Foods		High Efficiency Foods	
Beans	14.9	Plantain	3.50
Banana	14.3	Banana	3.33
Corn	13.0	Beans	2.52
Plantain	10.5		
Poultry	8.6	Mid Efficiency Foods	
		Cassava	1.88
Mid Efficiency Foods		Sweet Potatoes	1.78
Rice	6.9	Onions	1.77
Peanuts (Oil)	6.5	Beef	1.28
		Pork	1.23
Low Efficiency Foods		Low Efficiency Foods	
Beef	3.2	Potatoes	0.78
Potatoes	2.6	Tomatoes	0.68
Pork	2.5		
		Lowest Efficiency Foods	
Lowest Efficiency Foods		Rice	0.44
Milk	1.7	Milk	0.42
Onions	1.7	Corn	0.42
Tomatoes	0.9		

Note: If we were to add protein efficiency to the table above, the highest priority products from all three perspectives would likely be poultry and beans, since they would be the only items to rank in the higher groups on all criteria.

Source: Numerator from Appendix E and Table II-4; demominator from Appendix D.

[5]The examples shown in Table III-9 naturally require that retail or "city" prices be substituted for farm gate prices given in Table III-3.

Table III-9 does not include the exact same mix of crops as similar calculations, at the farm level, shown in Tables III-3 and III-4. This is because the fossil energy in bananas and plantains is unknown (but low) at the farm level; nevertheless, they show up in the overall efficiency ratios because they absorb measurable amounts of fossil energy in later stages of the agricultural processing and marketing system. Tobacco (to a major degree) and the other export crops do not really have domestic retail prices.

Nevertheless it is interesting to note that some products which are quite efficient by one or the other measures at the farm level are still classified in the high categories when total energy inputs are considered. For example, by the input/output measure, sweet potatoes and cassava were also the top two at the farm level. Bananas fell somewhat, and beans improved position, poultry was about unchanged. The products judged above average at the farm level remained above average in the total energy ratios. The same result occurred in the economic efficiency measure: those products above average at the farm level were above average in the total energy ratios. Plantains, bananas and poultry were all within the top three in both sets of ratios.

C. ENERGY TECHNOLOGY IN THE FOOD SYSTEM

1. Introducing New Energy Technologies

The term "energy technology" as used in this section refers to the types of energy utilized and the end use devices which convert fuels into heat or mechanical power. In section B we examined the differences in the quantities of energy used by different food products. But that discussion did not take into account the types of fuels or other energy which comprise total energy use, nor of the types of end use devices which are used for fuel conversion.

2. Energy Use by Energy Type

In this subsection we examine the types of energy used at various stages in the food system, including households.

a. Farm Level Energy Use by Type of Energy

The largest part of energy used at the farm level is energy in the form of chemical fertilizers. The other common fossil energy type is deisel fuel used for mechanical power. These two energy types constitute the basis of the energy analysis at the farm level. The rural energy survey (PCI, 1980) indicated that there were insignificant amounts of other types of energy used at the farm level outside of household uses, which will be dealt with later. Table III-10 outlines the percentages of fossil energy by type used in each crop.

Three of the crops used energy predominantly as fuel for mechanization. Sweet potatoes used all of its fossil energy in fuels, cassava 71 percent, and peanuts 67 percent. Inside basic grains, rice energy input is predominantly fertilizer energy (90 percent), while beans and corn are more diversified with 44 percent and 31 percent, respectively, in diesel.

TABLE III-10

ENERGY USE AT THE FARM LEVEL BY ENERGY TYPE AND MAJOR CROP

	% of Energy Used as Diesel	% of Energy Used as Nitrogen Fertilizer	% of Energy Used as Phosphate Fertilizer	% of Energy Used as Potassium Fertilizer	Total Farm Level Energy	Total National Energy Use at Farm Level by Type (10^6 Kcal)	
						Fertilizer	Diesel
Tobacco (Rama)	19.2	68.1	11.8	0.9	100.0	10,801	2,566
Cocoa (Grano)	0.0	79.1	13.4	7.5	100.0	790	–
Coffee (Cereza)	0.0	81.1	10.4	8.5	100.0	4,874	–
Rice	9.9	79.0	8.2	3.0	100.0	121,492	13,349
Beans	31.4	51.1	12.7	4.8	100.0	4,922	2,252
Corn	44.4	46.1	5.8	3.7	100.0	2,024	1,616
Cassava (Yuca)	70.9	20.0	7.1	1.9	100.0	650	1,584
Sweet Potato	100.0	0.0	0.0	0.0	100.0	–	220
Potatoes	7.9	75.2	11.3	5.6	100.0	2,446	210
Tomatoes	8.1	69.1	17.7	5.2	100.0	18,792	1,656
Peanuts (Oil)	67.0	23.9	6.9	2.1	100.0	3,529	7,166
Onions	0.2	80.3	12.9	6.6	100.0	1,469	3
				Total		171,789	30,622
				Percent		84.9%	15.1%

Source: EFSDR: Statistical Profile, Part II.

The total energy at the farm level is 84.9 percent in fertilizers, and 15.1 percent in fuels. This illustrates the predominant position of rice, tomatoes, and tobacco and their influence on the total fossil energy utilization at the farm level.

b. Energy Use by Energy Type in Processing, Transport, Marketing and Storage

Table III-11 outlines energy use by energy type in the processing, primary transport, marketing and storage sectors. Since the data on sugar processing were presented directly in the ONE industrial data file, sugar processing is included. Large scale marketing data on energy use by type were not available. Information on small scale marketing and small scale processing is drawn from the PCI-SEA Rural Energy Survey.

Fossil fuels comprise 60 percent of the total energy use in the Processing, Marketing, Transport (PMT) sectors. Diesel (35.9 percent), bagasse (20.2 percent, used in sugar processing) and charcoal (13.7 percent) are the most important energy types. Electrical energy predominates in small scale marketing (79 percent), which is mostly for refrigeration and lighting. Propane and gasoline are both important (27.8 percent and 25.8 percent, respectively) in the small scale processing industry for mechanical power. Fuel oils are used heavily in the edible oils industry and in the drinks subsector.

c. Household Energy Use by Energy Type

The PCI-SEA Rural Energy Survey 1980 obtained data on the energy use patterns of households in rural areas. Since the survey also included food processing and marketing

TABLE III-11

ENERGY USE BY ENERGY TYPE IN THE PROCESSING, MARKETING AND TRANSPORT STAGES, 1978

(10^6 Kcal; Includes Sugar Processing)

Industrial Categories	Electrical Energy	Kerosine	Gasoline	Diesel	Fuel Oil	Propane	Charcoal	Wood	Lubricating Oil	Grease	Crude Oil	Total Fossils	Begasse	Total
Medium & Large Scale Processing														
Meat & Milk (3111, 3112)	11,355	–	–	13,947	25,969	1,406	2,868	5,268	–	–	–	41,322	–	
Fruit, Vegetable & Oils (3113, 3115)	11,166	–	–	9,961	141,195	–	–	–	–	–	–	192,478	–	
Milling (3116)	11,138	–	–	25,600	574	–	–	31,193	401	–	–	26,575	–	
Baking (3117)	11,165	–	5,576	41,977	–	6,363	–	263,188	228	178	–	54,322	–	
Sugar (3118)	72,194	–	37,388	712,441	–	–	601	16,700	11,601	3,714	98,152	863,296	474,519	
Other Food Products (3119, 3121, 3122)	11,342	–	–	12,556	15,787	4,134	–	–	–	–	–	32,477	–	
Drinks (313)	13,358	2,401	–	13,253	119,445	–	–	–	571	–	–	135,670	–	
Tobacco (314)	1,882	–	–	2,322	2,964	–	–	–	–	–	–	5,286	–	
Totals Medium & Large Scale Processing	143,600	2,401	42,964	832,057	305,934	11,903	3,469	316,349	12,801	3,892	98,152	1,351,426	474,519	2,248,013
% of Category	6.3	0.1	1.9	37.01	13.6	0.5	0.1	14.0	.5	0.2	4.3	60.1	21.1	100%
Small Scale Processing	13,880	–	12,542	–	–	13,581	–	8,162	612	88		26,823		48,866
% of Category	28.4	–	25.7	–	–	27.8	–	16.7	1.3	0.2		54.9		100%
Small Scale Marketing	34,525	743	2,185	3,365	–	2,447	87	–	306	22		9,076		43,712
% of Category	79.0	1.7	5.0	7.7		5.6	0.2	–	0.7	0.05		20.7		100%
Primary Transport				6,391								6,391		6,391
% of Category														100%
Total Small Scale Processing														
Marketing & Primary Transport	192,005	3,144	57,691	841,893	305,934	27,931	3,556	321,512	13,719	4,002	98,152	1,393,716	474,519	2,344,058
% of Category	8.2	0.1	2.5	35.9	13.1	1.2	0.2	13.7	0.6	0.2	4.2	59.5	20.2	100%

Source: ONE Industrial Statistics, 1977, PCI-SEA Rural Energy Survey, 1980.

activities in urban areas, it was decided to utilize the same urban sample segments to obtain information on urban household energy use.

Unfortunately, the year of the survey followed closely on the heels of the 1979 hurricane which changed at least part of the energy consumption patterns. As mentioned earlier, forest and other trees were blown down by the hurricane and large quantities of wood became available for fuel both as wood and to be converted to charcoal. Survey estimates of the wood-based fuel use coefficients are very likely overestimates for a normal year. The degree of overestimation is impossible to determine because wood and charcoal can be stored for long periods—in other words, a great opportunity for gathering wood may lead partially to increased consumption as a substitute for other fuel sources and partly to storage.

i. Rural Households. Table III-12 outlines the consumption of energy by type in rural households by income level. Firewood constituted 87.4 percent of all energy consumed by rural households, with charcoal second at 7.4 percent. Wood based fuels represent 95 percent of total energy. Kerosine is the only other significant fuel, but counts for only 2.3 percent of the total.

The higher the income the lower the dependence on firewood; the highest income group received 82 percent of its energy from firewood, the poorest 90 percent. Much of this is simply substituted for charcoal; the highest income consumes 11 percent of its energy in charcoal, the lowest only 5.6 percent. We assume, except for firewood and charcoal, that the 1980 survey data are representative of an average year.

TABLE III-12

RURAL ENERGY CONSUMPTION PER FAMILY PER YEAR BY INCOME GROUP

	Firewood[a] (kg)	Kerosine (Liters)	Charcoal[a] (kg)	Gasoline (liters)	Elec. Ener. (Kw-Hr)	Propane (kg)
Low Income						
Quantity	5,212	81.6	203	6.63	126	11.0
10^6 Kcal	21.67	.725	1.35	0.055	0.109	0.132
Row % of Kcal	90.3%	3.0%	5.6%	0.2%	0.4%	0.5%
Column % of Kcal	34.6%	43.1%	24.8%	7.9%	24.3%	19.9%
Medium Income						
Quantity	5,152	52.2	220	22.0	127	13.0
10^6 Kcal	21.21	.464	1.46	.182	.109	.156
Row % of Kcal	89.8%	2.0%	6.2%	0.8%	0.5%	0.7%
Column %	33.9%	27.6%	26.8%	26.3%	24.3%	23.5%
High Income						
Quantity	4,754	55.5	395	54.8	267	30.4
10^6 Kcal	19.66	.493	2.63	.454	.230	.376
Row % of Kcal	82.3%	2.1%	10.9%	1.9%	1.2%	1.6%
Column % of Kcal	31.5	29.3	48.4%	65.8%	51.4%	56.6%
All Income Levels						
Quantity	5,042	63.4	271	27.6	173	18.0
10^6 Kcal	20.80	.563	1.80	.229	.149	.215
% of Kcal	87.4%	2.3%	7.4%	1.2%	0.8%	0.9%

[a]Firewood and charcoal consumption probably are overestimated, since the energy survey immediately followed the 1979 hurricane in which many trees were knocked down (see text).
Source: PCI-SEA Rural Energy Survey.

ii. Urban Households. The dramatic difference between the urban and rural household is its dependence on wood and charcoal. Even with the impact of the hurricane, the total dependence of urban households on firewood is 8.4 percent and on charcoal 27.3 percent for a total wood-based fuel dependence of 38 percent. Propane is the principal household fuel in urban areas, and gasoline principally for transportation in the higher income strate. Table III-13 outlines these findings.

TABLE III-13

URBAN ENERGY CONSUMPTION PER FAMILY PER YEAR BY INCOME GROUP

	Firewood (kg)	Kerosine (liters)	Charcoal (kg)	Gasoline (liters)	Elec. Ener. (Kw-Hr)	Propane (kg)
Low Income						
Quantity	542	4.49	614	80.4	982	104
10^6 Kcal	2.255	0.040	4.08	0.66	0.84	2.42
Row % of Kcal	21.9%	0.4%	39.7%	6.4%	8.1%	23.5%
Column % of Kcal	73.7%	33.7%	41.9%	11.7%	21.5%	18.3%
Medium Income						
Quantity	141	4.51	459	181	1,366	197
10^6 Kcal	0.587	0.040	3.05	1.50	1.17	4.58
Row % of Kcal	5.4%	0.4%	27.9%	13.7%	10.7%	41.9%
Column % of Kcal	18.9%	33.8%	28.7%	26.5%	29.9%	34.7%
High Income						
Quantity	54.3	4.37	392	423	2,223	267
10^6 Kcal	0.226	0.039	2.60	3.50	1.90	6.21
Row % of Kcal	1.6%	0.3%	18.0%	24.2%	13.1%	42.8%
Column % of Kcal	7.4%	32.5%	26.7%	61.8%	48.6%	47.0%
All Incomes						
Quantity	241	4.46	488	228	1,525	189
10^6 Kcal	1.00	0.040	3.24	1.89	1.30	4.40
Row % of Kcal	8.4%	0.3%	27.3%	15.9%	11.0%	37.1%

Average urban family size = 5.9.
Source: PCI-SEA Urban Energy Survey.

iii. Total Households. Table III-14 combines household energy use for both urban and rural households, and outlines the total quantities of the major fuels consumed by household groups in Kcal of energy value. The averages of Tables III-12 and III-13 have been expanded to an estimate for all households.

3. Energy End Use Devices

a. Farm Level Energy End Use Devices

Table III-15 outlines the distribution frequency of energy end use devices at the farm level. Farm level processing equipment, some of it powered and some of it operating off

TABLE III-14

ESTIMATED TOTAL HOUSEHOLD ENERGY CONSUMPTION, 1978

	Urban		Rural		Total
Firewood					
Quantity (Kg) x 10^6	111.51	5.2%	2,016.37	94.8%	2,127.88
Kcal x 10^6	463,674.		8,384,077.		8,847,751.
Columns Kcal %	10.3%		87.4%		62.7%
Kerosine (liter)					
Quantity (liters) x 10^6	2.06	7.4%	25,493	92.6%	27.55
Kcal x 10^6	18,331.		226,485.		244,816
Colums Kcal %	0.4%		2.4%		1.7%
Charcoal					
Quantity (Kg) x 10^6	225.95	67.2%	110.51	32.8%	336.46
Kcal x 10^6	1,502,596		734,877		2,237,473
Column Kcal %	33.2%		7.7%		15.9%
Gasoline					
Quantity (liters) x 10^6	105.87	90.2%	11.47	9.8%	117.34
Kcal x 10^6	875,122		94,798		969,920.
Column Kcal %	19.4%		1.0%		6.9%
Electrical Energy					
Quantity (Kw-Hr) x 10^6	706.63	91.0%	69.82	9.0%	776.45
Kcal x 10^6	607,699		60,041		667,740
Column Kcal %	13.4%		0.6%		4.7%
Propane					
Quantity (Kg) x 10^6	87.63	92.2%	7.40	7.8%	95.03
Kcal x 10^6	1,052,870		88,749		1,141,619
Column Kcal %	23.3%		0.9%		8.1%

Source: Tables III-12 and III-13.

TABLE III-15

ENERGY END USE DEVICES AT THE FARM LEVEL

	Tractors	Pumps	Transport Vehicles	Processing Equipment	Generators Motors
Farm Size					
0-1 Ha.	0	3.2	6.5	1.2	0
1-3 Ha.	0	9.5	7.4	11.6	0
3-10 Ha.	0	39.7	32.4	41.5	11.0
10+ Ha.	100%	47.6	53.7	45.7	89.0
Farm Enterprise Type					
Tree Crop Farms	23.8	26.2	14.8	2.4	0
Annual Crop Farm	14.3	44.4	41.7	62.8	32.8
Livestock Farms	61.9	29.4	39.8	34.8	67.2
Mixed Enterprise Farms	0	0	3.7	0	0
All Farms	100.0%	100.0%	100.0%	100.0%	100.0%
% of Devices by Type	3.9%	23.6%	20.2%	30.7%	1 7%

Source: SEA-AID Agriculture Sector Analysis Survey, 1976, and the PCI-SEA Rural Energy Survey, 1980.

motors, generators or tractors, is the most common end use device, constituting 30.7 percent of all such devices. Pumps constitute the second most frequent device and appear to be concentrated in the larger 3+ hectare annual crop farms where irrigation is prevalent. More than half of the transport vehicles are owned by farmers with more than 10 Ha. Electrical generation and the use of central power sources in unattached motors is very rare; only 1.7 percent of devices, and less than 1 percent of clearly powered devices, are in this category.

b. Energy End Use Devices in Small Scale Processing and Marketing

The PCI-SEA Rural Energy Survey (1980) included samples of small scale processing and marketing enterprises in both rural and urban areas. Information was gathered on energy use by type and by energy end use device. No comparable data set was found for medium and large scale processing and marketing. Table III-16 outlines energy end use device information for these two sectors from the 1980 survey.

Small scale industries had only electrical generation and transportation equipment which used gasoline. In small scale marketing enterprises there was a wide variety of gasoline equipment ranging from 63 percent in transport equipment for products to 14.8 in gasoline driven equipment. Diesel was used predominantly by small scale marketing for transport equipment.

Electrical equipment was predominantly lighting in both small scale industry and small scale marketing.

TABLE III-16

ENERGY END USE DEVICES IN SMALL SCALE INDUSTRY AND MARKETING

Type of Fuel or Energy Gasoline	Small Scale Industry	Small Scale Marketing % in Category
Device		
1. Pump	0	3.7
2. Generator	25	11.1
3. Transport Products	25	63.0
4. Transport People	0	7.4
5. Equipment	0	14.8
1. Lighting	61.7	65.1
2. Freezers, Refrigerators	4.6	21.4
3. Manf. Machinery	19.4	1.5
4. Other	14.3	12.0

Source: PCI-SEA Rural Energy Survey.

c. Energy End Use Devices in Households

Table III-17 outlines the energy use in households both urban and rural, by the class of end use device.

In the rural areas a larger percent of energy is used in lighting and food storage than in urban areas. This reflects in part the efficiency of electric lighting as an energy source for lighting. Rural households have to expend higher relative quantities of energy to cover their simple lighting needs.

There is a much higher number of end use devices in the urban household; lighting is the most important in numbers, but cooking and transportation are the most important, as would be expected for energy use.

TABLE III-17

ENERGY BY END USE DEVICE CATEGORY FOR HOUSEHOLDS

	No. of Devices (10^2) All	% of Devices	Total Energy Consumed 10^6 Kcal	% of Energy Consumed by Device
Rural				
Cooking Apparatus	5,267.1	38.2	9,346,241	97.6
Food Preparation	10.5	0.1	87	0.0
Lighting	5,203.7	37.7	116,142	1.3
Food Storage	447.7	3.2	32,341	0.3
Temperature Control (Non-fuel)	77.8	0.6	0	0.0
Household Equipment	2,691.8	19.6	83,337	0.8
Transport	88.9	0.6	0	0.0
Urban				
Cooking Apparatus	6,809.7	16.5	3,727,869	43.2
Food Preparation	238.7	.6	2,121	0.0
Lighting	19,430.7	47.1	48,577	0.6
Food Storage	3,614.6	8.8	289,403	3.3
Temperature Control	1,330.0	3.2	38,557	0.4
Household Equipment	9,173.9	22.2	321,518	3.7
Transportation	653.7	1.6	4,225,390	48.8

Source: PCI-SEA Rural & Urban Energy Survey, 1980.

D. TECHNOLOGY FACTORS AND ENERGY USAGE IN FARM LEVEL AGRICULTURAL PRODUCTION OF MAJOR FOOD PRODUCTS

1. Shifting the Level of Reliance Among Existing DR Agricultural Technologies

The same product, rice for example, is currently produced in the DR at widely varying levels of technology. The most mechanized and fertilized method requires 430 X 10^3 Kcal of fossil fuel to produce one ton of rice; the next technology type requires only 242, and the lowest level only 43 Kcal. At the present time, 86 percent of rice is produced at the highest fossil energy use level, 12 percent at the second and 2 percent at the lowest. One

policy alternative is to change these proportions, growing more rice at the lower fossil energy requirements level. There are, of course, many implications of such a change besides its energy saving aspect. Non-fossil energy may be difficult to substitute. Farmers may lose money, production may decrease, farmers may be unable (due to large capital investments already made) to roll back the technological calendar, etc. The role of this document is not to trace out all of these possible impacts. What is attempted is to lay out some of the basic arithmetic of the potentials of shifting these proportions and examine the implications of at least a few of the impact chains.

Seven different factors which could define different techniques of production were used to analyze the two farm survey data sets (SEA-AID, 1976, and PCI-SEA, 1980) and to group farms and products. These seven factors are:

1. Variety of plant or stock (i.e., improved seeds, hybrids, native, etc.)
2. Cropping system (i.e., single, multiple, or intercropped)
3. Level of chemical use (i.e., quantity of fertilizer applied
4. Irrigation (i.e., irrigated or not)
5. Level of mechanization (number of cultivation and harvest processes mechanized)
6. Farm size
7. Region (the country was divided into seven geographic regions).

As we shall see, all of these factors may have some effect upon production techniques actually employed. As the factors interact with each other they create combinations of techniques that are numerous and complex. In what follows it is necessary to simplify by treating the factors one at a time when considering their influence on a given agricultural product. As mentioned in Part II (page 16), part of the simplification process involves creation of three technology subdivisions by concentrating on two key factors: levels of chemical use and mechanization (power). These are the factors which most directly influence the amount of fossil energy absorbed in the production process at the farm level.

In what follows the relation of fossil energy input to the various factors as well as the "composite technology" classifications are illustrated for important crops and livestock products. This information lays the foundation for possible policy options in energy usage that might be opened through control of a certain factor(s) which apparently exhibits a lot of "energy influence."

2. *Rice*

Tables III-18 and III-19 indicate the energy inputs and energy efficiency in rice production at the farm level by technology (factor) groupings.

a. Composite Technology Groups

The composite technology levels combine mechanization and chemical input intensity. Rice has the highest percentage of any crop produced at the high composite technological level. Thirty-seven percent of all rice farms (Table II-5) and 85.5 percent of all rice production are in this highest technology level. This indicates both a concentration of production in a

TABLE III-18

ENERGY USE PATTERNS ASSOCIATED WITH DIFFERENT AGRICULTURAL PRODUCTION TECHNOLOGIES IN RICE

	Energy Input per Ton Produced (Kcal/Ton)	Physical Yields/Ha. MT/Ha.	Share of Output Influenced by Factor (%)
Area Cultivated			
0-1 Ha.	303,436	2.04	3.2
1-3 Ha.	347.023	2.55	8.8
3-10 Ha.	330,199	2.60	17.0
10+ Ha.	423,776	3.09	71.0
			100.0
Region			
North	682,415	2.48	25.5
Northeast	282,794	2.91	24.6
Northwest	285,524	3.66	35.8
Central	220,447	1.67	3.7
Southwest	440,459	3.39	8.8
South	81,181	1.12	0.7
East	428,562	1.41	0.8
			100.0
Composite Technology			
High	430,461	3.10	85.5
Medium	242,062	2.42	11.6
Low	43,137	1.33	2.9
			100.0
Total	397,248	2.89	100.0

	Energy Input Per Ton Produced Kilo Calories/Ton	Physical Yields/Ha. MT/Ha.	Share of Output Influenced by Factor (%)
Cropping [b]			
Mult./Asso.	27,037	1.08	0.9
Solo	400,671	2.94	99.1
			100.0
Chemicals			
None	17,461	1.06	2.2
1 Quart.	112,269	2.27	8.5
2 Quart.	295,603	2.83	33.9
3 Quart.	430,205	3.18	22.9
4 Quart.	580,631	3.40	32.5
Irrigation			
Yes	417,901	3.09	92.9
No	127,309	1.57	7.1
			100.0
Power [a]			
None	305,976	2.00	6.8
1-2	327,811	2.51	11.8
3-5	414,059	3.08	79.3
6-7	446,093	2.71	2.1
			100.0

[a]Power (mechanization level) is weighted farm operations performed with machinery (see Appendix D).
[b]Cropping patterns are: multiple or in association with other crops (usually corn and beans) or "alone" (solo).
Source: Appendix D; EFSDR: Statistical Profile, Part I and Part IV.

relatively few larger and more technologically advanced farms. Only 14.5 percent of production took place at the lower two technology levels. The difference in energy input is substantial. The high level farms utilized 430 x 10^3 Kcal per ton produced, which was 1.7 times higher than the medium group and almost exactly 10 times higher than the low technology group. Yield increases appear to substantially justify this marginal energy input.

The highest technology group is obviously the least efficient in total and fossil energy efficiency, as outlined in Table III-19, though the differences in the total ratio are small between the high and medium groups. Twenty-seven percent of farms are in the low category and their energy use is only one-tenth that of the medium and high groups on a per ton basis. For fossil fuel efficiency there is a dramatic difference between the technology levels. The lowest group produces at an efficiency level 13 times higher than the highest technology farms and their yield levels per hectare are only 2.3 times lower. Questions of the scarcity of land would probably enter any final judgment about the overall economic and resource efficiency of these alternative techniques.

TABLE III-19

ENERGY USE EFFICIENCY RATIOS FOR RICE

	Economic Efficiency of Energy Use RD$ Output/ 10^6 Kcal	Energy Output/Input Efficiency Fossil Energy Input Kcal	Energy Output/Input Efficiency Total Energy Input Kcal
Cultivated			
0-1 Ha.	0.774	12.2	6.6
1-3 Ha.	0.677	10.7	7.8
3-10 Ha.	0.711	11.2	9.2
10+ Ha.	0.554	8.7	8.2
Region			
North	0.344	5.4	5.3
Northeast	0.830	13.1	11.9
Northwest	0.822	13.0	11.6
Central	1.065	16.8	13.4
Southwest	0.533	8.4	5.5
South	2.892	45.6	12.4
East	0.548	8.6	7.5
Technology			
High	0.545	6.6	8.0
Medium	0.970	15.3	10.1
Low	5.443	85.8	16.0
Total	0.591	9.3	8.3

	Economic Efficiency of Energy Use RD$ Output/ 10^6 Kcal	Energy Output/Input Efficiency Fossil Energy Input Kcal	Energy Output/Input Efficiency Total Energy Input Kcal
Cropping			
Mult./Asso.	8.684	136.6	19.1
Sold	0.586	9.2	8.3
Chemicals			
None	13.447	211.9	16.0
1 Quart.	2.091	33.0	21.4
2 Quart.	0.794	12.5	10.9
3 Quart.	0.546	8.6	7.8
4 Quart.	0.404	6.4	5.9
Irrigation			
Yes	0.562	8.9	8.0
No	1.844	29.1	17.5
Power			
None	0.767	12.1	6.9
1-2	0.716	11.3	8.4
3-5	0.567	8.9	8.5
6-7	0.526	8.3	6.7

Source: EFSDR: Statistical Profile, Part VI.

b. Farm Size and Energy Use

Seventy-one percent of rice production takes place on farms over 10 Ha. In the country as a whole, only 13 percent of farms are over 10 Ha. This implies that rice is basically a large farm crop, grown at predominantly high chemical and mechanization levels.

There appears to be little difference in economic efficiency of energy use by farm size, though there is a slight downward trend as farm size increases. In fossil energy efficiency the same pattern exists, and when allowance is made for total energy (including labor and animal power), the small farms are actually less energy efficient than the larger, higher fertilizing farm size classes (Table III-19).

c. Regional Production Technologies

Rice is grown predominantly in the Northern regions of the country, and the energy input appears to vary more by region than any other single explanation. The North region, where 25.5 percent of the rice is produced, has a production technology which requires extremely high levels of energy. An examination of yields by region indicates that yields in the high energy North region are in fact lower than in the other low energy regions, Northeast and

Northwest. As can be seen, the energy input level in the North region is 682 x 10^3 Kcal/ton, and only about 284 x 10^3 Kcal in the other two major producing areas. This indicates that the North uses 2.4 times as much energy per ton as the other major producing areas, and obtains only 65 percent of the yield per hectare. It would appear from this information that the North region is an energy expensive technology for rice production with no yield increase at all to justify the system. If the 25.5 percent of rice grown in the North could be absorbed in the other two regions which already produce 60.4 percent of the rice in the DR, the energy savings would be 34,405 x 10^6 Kcal or 25.5 percent of the total rice energy bill. The savings would be more than the energy utilized by any other crop or livestock activity except sugar cane. A sample survey like the SEA-AID 1976 survey was not designed to provide highly reliable expansions of quantities produced; it is very possible that the proportions of product produced in these regions are not exactly correct, but the energy ratios and the yield ratios should be reasonably reliable.

The contrast between the North and the Northeast-Northwest regions is further illustrated by the energy efficiency ratios. The largest difference in efficiency appears in the economic efficiency ratio where the North region is 2.4 times less efficient than the other major producing regions. This regional relationship is borne out with little modification by the fossil energy efficiency ratio, but shows us somewhat less clarity in the total energy ratio where the difference is a factor of 2.2. This would indicate that there is probably more labor utilized in the Northeast and Northwest regions; it is possible that the additional labor is one of the reasons for their higher yields. In any case, there is a substitution between these regions of labor for fossil energy and it appears from a superficial look to be an inappropriate substitution which decreases the energy efficiency of production without any compensating response in yields.

d. Chemical Intensity

Only 2.2 percent of rice production occurs without chemical fertilizers. Rice is the second largest consumer of chemical fertilizers among DR crops. Sugar cane utilizes 67 percent of the total fertilizer and rice 14.7 percent. Tobacco is the next largest fertilizer consumer after rice, and it consumes only 2.9 percent of the total. Corn, beans, and pigeon peas, the balance of the basic food grains, utilize only 0.4 percent of the total fertilizer. If chemical energy is to be conserved in the DR, the major lines of that effort must be sugar cane and rice. For this study, the focus is on rice. A review of energy increases with increasing chemical intensity indicates that energy is traded at more and more unfavorable terms for rice as the intensity of application rises. From the first quartile to the second, the level of energy input rises by 2.6 times and the yield per hectare rises only 25 percent. From the second to the third quartile, energy per ton rises by 45 percent and yields per hectare rise only 12 percent. The least favorable transition from the point of view of the tradeoff between energy input and increased output per Ha. is the transition from the technology employed by farms in the second quartile, which produced 8.5 percent of all rice, to the third quartile.

Every ton of production shifted to the lower energy consuming of these two technologies would conserve 183 x 10^3 Kcal of fossil energy.

e. Mechanization and Energy Use

Only 6.8 percent of rice is cultivated without mechanization, 12 percent of the production is grown with up to two of the basic cultivation tasks mechanized, and 83 percent with more than three functions mechanized. This places rice at the top of the mechanization scale for crops in the DR, yet the level of mechanization has considerably less impact on total energy use than regional differences in technology and farm size influences. It would appear that mechanization in rice (among the predominant producers) is clustered around four functions mechanized and at about 400,000 x 10^3Kcal per ton of output. From a review of yields per hectare it would appear that the farms in the 3-5 functions mechanized category have reached the highest yields. Greater mechanization does not seem to be associated with higher yields.

3. Beans

Table III-20 relates fossil energy to production technique for bean production, and Table III-21 contains energy efficiency ratios.

TABLE III-20

ENERGY USE PATTERNS ASSOCIATED WITH DIFFERENT AGRICULTURAL PRODUCTION TECHNOLOGIES FOR BEANS

	Energy Input per Ton Produced (Kcal/Ton)	Physical Yields/Ha. MT/Ha.	Share of Output Influenced by Factor		Energy Input per Ton Produced (Kcal/Ton)	Physical Yields/Ha. MT/Ha.	Share of Output Influenced by Factor
Area Cultivated				Cropping			
0-1 Ha.	43,928	.48	24.7	Mixt./Asso.	57,713	.55	32.1
1-3 Ha.	43,151	.56	31.7	Solo	226,702	.59	67.9
3-10 Ha.	236,298	.50	18.4				
10+ Ha.	413,486	.84	25.3	Chemicals			
				[illegible]	15,504	.51	51.7
Region				1 Quart.	105,012	.43	5.8
North	52,409	.47	20.1	2 Quart.	102,411	.57	5.9
Northeast	12,338	.57	9.4	3 Quart.	87,013	.91	11.6
Northwest	12,256	.69	3.6	4 Quart.	569,957	.70	24.9
Central	523,121	.66	17.4				
Southwest	156,828	.81	26.1	Irrigation			
South	39,131	.40	6.7	Yes	318,501	.86	38.8
East	155,300	.48	16.7	No	79,779	.47	61.2
Composite Technology				Power			
High	402,146	.71	36.8	None	19,591	.52	53.6
Medium	159,625	.57	15.4	1-2	257,421	.48	24.5
Low	0	.50	47.8	3-5	451,009	1.06	21.9
Total	172,442	.57	100.0	6-7	0	0	0.0

Source: Appendix D and EFSDR: Statistical Profile, Part I and Part IV.

TABLE III-21

ENERGY USE EFFICIENCY RATIOS FOR BEANS

	Economic Efficiency of Energy Use	Energy Output/Input Efficiency			Economic Efficiency of Energy Use	Energy Output/Input Efficiency	
	RD$ Output/ 10^6 Kcal	Fossil Energy Input Kcal	Total Energy Input Kcal		RD$ Output/ 10^6 Kcal	Fossil Energy Input Kcal	Total Energy Input Kcal
Cultivated				Cropping			
0-1 Ha.	13,185	78.1	4.5	Mult./Asso.	10,036	59.4	7.3
1-3 Ha.	13,423	79.6	7.4	Solo	2,555	15.1	5.7
3-10 Ha.	2,451	14.5	7.5				
10+ Ha.	1,401	8.3	6.0	Chemicals			
				None	37,357	221.2	5.7
Region				1 Quart.	5,516	32.7	11.5
North	11,051	65.4	7.0	2 Quart.	5,656	33.5	11.0
Northeast	46,943	278.0	11.7	3 Quart.	6,657	39.4	15.2
Northwest	47,260	279.9	11.6	4 Quart.	1,016	6.0	4.5
Central	1,107	6.6	5.0				
Southwest	3,693	21.9	4.4	Irrigation			
South	14,802	87.7	5.1	Yes	1,819	10.8	5.2
East	3,730	22.1	9.4	No	7,260	43.0	6.8
Technology				Power			
High	1,440	8.5	6.0	None	29,565	175.1	5.8
Medium	3,629	21.5	8.7	1-2	2,250	13.3	7.4
Low	0		5.6	3-5	1,284	7.6	5.7
				6-7	0		
Total	3,359	19.9	6.1				

Source: EFSDR: Statistical Profile, Part VI.

a. Composite Technology Levels

Beans are produced in large quantities in all three of the technology levels, unlike rice, where very little was produced in the "low" category. Forty-seven percent of all beans and 78 percent of farms with beans are in the lowest technology group. The distribution is bi-modal; another large share of production (37 percent) was produced by only 8 percent of the farms in the high technology category. The largest proportion of beans is produced without any measurable fossil energy at all, relying on hand labor. The yields on these farms in the lowest energy group are 42 percent below the highest group, but only 14 percent below the mid group which uses 159 x 10^3 Kcal of energy for every ton of product. It would appear that to move from low to medium is a less than optimal tradeoff of energy for added production per land unit.

b. Farm Size and Energy Use

Energy use in beans appears to be closely related to the size of the farm. There is a dramatic jump in energy input levels per hectare between the 1-3 and the 3-10 hectare level;

this division often marks the difference between what might be termed "minifundia" and economically viable sized farm units. However, per hectare yields make no corresponding jump. This supports the position that viable production technologies exist along a wide energy continuum in beans. Production quantities are distributed almost evenly between the arbitrary farm size groupings chosen for these tables, with 56 percent of the total produced on farms less than 3 Ha. in size.

The 56 percent of production on farms under 3 Ha. is about 7 times as efficient from the point of view of output value per unit of fossil energy as the 44 percent on farms over 3 Ha. (Table III-21). A review of the energy efficiency ratios, both fossil and total, for the farm size grouping supports what was said earlier in the discussion of regional technologies, that the major differences in fossil energy use efficiency appear to be due to labor substitution for energy. This conclusion flows from the fact that while the "fossil" efficiency ratio for the 1-3 Ha. group is 5.5 times as high as the 3-10 Ha. group, the "total" efficiency ratios are only 10 percent different and the superiority is actually in favor of the fossil inefficient 3-10 Ha. technology. This implies that what is gained in fossil efficiency is lost in additional human energy expenditure. Beans exhibit this tradeoff relationship more clearly than any other product.

c. Regional Production Technologies

Four regions produce 80 percent of the beans in the DR at widely varying levels of energy input. The second largest producing region, the North region, which had such an unfavorable production technology for rice, appears to have a very energy efficient bean production technology. The North region achieves a yield of .47 tons/Ha. at an energy input level of 52 x 10^3 Kcal per ton of output, contrasted to the Southwest which utilizes more than 10 times as much energy per ton (523) and achieves only 40 percent better yields per hectare. An even better technology exists in the other two North regions (Northeast and Northwest) where energy inputs are down to 12 x 10^3 Kcal per ton, yet yields per hectare are at .57 and .69 MT/Ha. On the average this is 5 percent below the Central region yield which requires 44 times as much energy per ton. It would appear from the data in this table that there exists a wide variety of alternative technologies for growing beans which lie along a wide energy scale but which do not imply correspondingly large differences in yields per Ha.

The three Northern regions have relatively high economic efficiency ratios which range from 11-47 times as high as the energy inefficient Central region. The fossil energy efficiency ratios range from 65 in the North to 278 in the Norhteast and Northwest. The differences between the North and Central technologies appear to be in large part a substitution of labor (human and animal) for fossil energy since the total energy efficiency ratios in the North are only 1.4-2.3 times as high. The possibility of substituting labor inputs for fossil energy inputs is one of the major policy options open to the DR, and beans appear to be one crop in which such a substitution may be possible. The potential in rice for such substitution is much less.

d. Cropping System

Interplanting accounts for 32 percent of bean production and is the lowest energy technique, requiring only 25 percent as much energy as beans planted alone. The yields are surprisingly similar; the lower energy interplanting technique yields only 6.8 percent less than the single planting with one-fourth the fossil energy. Without a careful analysis of yields of the companion crop, it is difficult to determine the complete energy picture, yet interplanting would appear from these data to be a very attractive energy conserving alternative.

Managing interplanting requirements appears to require additional labor, and this additional labor almost eliminates in a total energy sense the advantage in fossil fuel efficiency which is gained by sharing fertilizer and land preparation (plowing) energy costs between two crops. The fossil efficiency ratio for interplanting is eight times as high as "solo" cultivation, yet this advantage is reduced to 1.3 if the energy expended by farm workers and animal power is added.

e. Irrigation

Irrigated beans account for 38.8 percent of production and the yield figures indicate a rather impressive increase of 83 percent. The energy utilization increases by an even higher factor of 4 times. The additional 390 kilos of beans produced on a hectare of irrigated land cost an additional 93×10^3 Kcal or 23.8 Kcal per 100 grams of beans which have an energy value of 83 Kcal per 100 grams. The shift from the dry land technology to the irrigated technology would have an increemental fossil energy efficiency ratio of 3.5, which is far less than any of the fossil energy efficiency ratios for beans. It is interesting to note that the dryland beans apparently utilize considerably more labor per ton, not because there is less work to be done on irrigated beans but because most irrigated beans are also mechanized.

Total energy efficiency is not significantly changed by irrigation in the computations we have presented. If the total energy input into the delivery of the water to the farm were included, this difference would widen. While pumping of irrigation water is not common in the DR, the energy costs of construction of gravity flow systems would not be insignificant if it were to be included.

f. Chemical Intensity and Mechanization

The number of farm observations in the groupings for these characteristics is probably too small to provide reliable statistical results at the level of each of the sub-groups in Tables VI-C-3 & 4. For the purpose of analyzing the impact of additional chemicals on energy use efficiency, it is possible to group all nonfertilizing farms into one group and all other farms into another, and this way maintain significant sample sizes. From this analysis it appears that the fossil efficiency is about 6 times higher for the nonfertilizing farms, but total energy efficiency superiority lies with the fertilizing farms which are about twice as total energy efficient. This supports and extends the conclusions stated above that beans present a clear tradeoff between

labor and fossil energy. If the technology is shifted to utilize less fossil energy, labor can effectively substitute without loss of yields per hectare, but the trade results in more labor energy expended than fossil energy saved. Given the relative scarcity in the DR of human and fossil energy, the tradeoff is probably a wise one.

4. Corn

Corn technology and energy use are outlined in Tables III-22 and III-23.

TABLE III-22

ENERGY USE PATTERNS ASSOCIATED WITH DIFFERENT AGRICULTURAL PRODUCTION TECHNOLOGIES FOR CORN

	Energy Input per Ton Produced (Kcal/Ton)	Physical Yields/Ha. MT/Ha.	Share of Output Influenced by Factor %		Energy Input per Ton Produced (Kcal/Ton)	Physical Yields/Ha. MT/Ha.	Share of Output Influenced by Factor %
Farm Size (Cultivated)				Cropping			
0-1 Ha.	10,980	1.11	25.8	Mult./Asso.	19,667	1.01	27.5
1-3 Ha.	17,409	1.28	37.8	Solo	68,553	1.47	72.5
3-10 Ha.	40,289	1.32	22.5				
10+ Ha.	264,007	2.12	13.9	Chemicals			
Region				None	17,698	1.11	62.2
				1 Quart	20,958	1.62	9.4
North	82,405	1.661	30.1	2 Quart	36,404	1.15	3.7
Northeast	11,422	1.63	24.7	3 Quart	8,176	2.09	3.7
Northwest	69,011	.62	3.5	4 Quart	192,649	2.17	21.0
Central	89,351	.95	1.9				
Southwest	116,221	1.12	16.2	Irrigation			
South	0	.67	2.4				
East	21,629	1.22	21.2	Yes	167,174	1.04	10.1
				No	42,501	1.35	89.9
Technology							
				Power			
High	180,749	2.12	21.7				
Medium	50,030	1.31	31.9	None	5,590	1.15	53.2
Low	0	1.11	46.4	1-2	47,392	1.35	31.0
				3-5	236,706	2.21	15.8
TOTAL ALL	55,132	1.51	100.0	6-7	0	0	0.0

Source: Appendix D and EFSDR: Statistical Profile, Part I and Part IV.

a. Composite Technology Levels

Almost one half of corn production takes place at the lowest technology level without fertilization and without mechanization. Sixty-two percent is without fertilizers. Yields are generally affected by these technological differences—the highest technology groups have doubled the yields per hectare as do the low technology farms. This is in contrast to rice where there is only a 50 percent rise in yields from low-high technology. The 21 percent of production in the high group requires 181 x 10^3 Kcal per ton of production. The energy efficiency

TABLE III-23

ENERGY USE EFFICIENCY RATIOS FOR CORN

	Economic Efficiency of Energy Use	Efficiency of Output/Input Energy			Economic Efficiency of Energy Use	Efficiency of Output/Input Energy	
	RD$ Output/ 10^6 Kcal	Fossil Energy Input	Total Energy Input		RD$ Output/ 10^6 Kcal	Fossil Energy Input	Total Energy Input
Farm Size (Cultivated)				Cropping			
0-1 Ha.	10,456	321.0	15.2	Mult./Asso.	5,837	179.2	17.9
1-3 Ha.	6,594	202.5	25.5	Solo	1,675	51.4	20.6
3-10 Ha.	2,849	87.5	31.4				
10+ Ha.	0,435	13.4	12.1	Chemicals			
Region				None	6,487	199.2	19.5
				1 Quart	5,478	168.2	48.3
North	1,393	42.8	20.7	2 Quart	3,154	96.8	18.8
Northeast	10,051	308.6	35.3	3 Quart	14,042	431.2	32.1
Northwest	1,664	51.1	11.4	4 Quart	0,596	18.3	15.5
Central	1,285	39.5	11.4				
Southwest	0,988	30.3	10.9	Irrigation			
South	0	0	10.6				
East	5,308	163.0	29.6	Yes	0,687	21.1	11.2
				No	2,701	82.9	21.6
Technology							
				Power			
High	0,635	19.5	16.3				
Medium	2,295	70.5	22.9	None	20,535	630.5	19.9
Low	0	0	19.9	1-2	2,422	74.4	25.4
				3-5	0,485	14.9	13.6
TOTAL ALL	2,082	63.9	19.8	6-7	0	0	0

Source: EFSDR: Statistical Profile, Part VI.

of these different technology levels is correspondingly large, the low technology having an almost infinite efficiency due to its extremely low fossil energy use. Total efficiency, however, is almost the same for the high and low groups, indicating a similar labor for fossil fuel substitution processes similar to that found in beans.

b. Farm Size and Energy Use

The large energy increase takes place on farms over 10 Ha. where yields also increase significantly. In the case of beans the rise in energy use took place on farms over 3 Ha. and was not associated with a significant increase in physical yields per Ha. Sixty-seven percent of corn producers are in the 0-1 Ha. category and they account for only 25.8 percent of total production; in contrast, 0.7 percent of corn producers are in the 10+ Ha. group, but they produce 14 percent of the output. It is this 14 percent which takes place at high fossil energy levels of 264 x 10^3 Kcal per ton.

c. Regional Production Technologies

From a review of yields and energy use levels, it would appear that the high energy corn production is not regionally concentrated. Low level energy production would appear to be interspaced with high energy production throughout all regions.

d. Cropping System

Approximately 27.5 percent of corn is interplanted with an associated crop; the yields are 47 percent less in association than in "solo" cultivation. Fossil energy consumption is triple on the "solo" planted corn; it is obvious that all of the large farm heavily fertilized corn is in this category. The interplanted corn apparently utilizes enough additional human labor and animal power that the total energy efficiency ratio is only 12 percent different. The yields are so much lower on the interplanted corn that it would appear that the increase in fossil energy efficiency is at a very heavy cost in human energy terms. The technology option of more interplanting to save fossil energy would be much more advisable in beans than in corn where its cost in human energy substituted and physical yield losses is considerably higher.

e. Chemical Intensity and Mechanization

Surprisingly, there is mechanization in corn where there is no fertilization, and while yields are lower for this group than any other, there is no large increase in yields until chemical application reaches the third quartile.

Mechanization follows very consistently the increasing trend in total fossil energy input, and physical yields also increase in a consistent fashion with increased mechanical power.

5. Cassava (Yuca)

Energy and technology comparisons are presented for cassava in Tables III-24 and III-25.

More than half of cassava is produced at the low technology level, and the high and medium technology levels have low total energy inputs relative to other crops. The average of these two upper level groups is only 25 x 10^3 Kcal compared with the high/low average per ton for rice and corn at 370 and 250 x 10^3 Kcal, respectively. What this implies is that cassava is a low energy crop at all existing DR technologies.

There is very little production of yucca in large farms, but under 10 Ha. the distribution of production does not appear to be concentrated in the minifundia class. Yields are significantly affected by farm size, yet energy inputs only increase correspondingly. This is consistent with the figures under the chemicals grouping which indicate no dramatic yield responses to increased fertilization. Seventy-one percent of cassava is cultivated without fertilizers though mechanization of certain operations occurs in almost half of the farms. Regional energy use is not clearly patterned, nor are there important differences between the half of production which is interplanted and the half which is not. Both have similar yields, and the energy savings of interplanting which was apparent in corn and beans is slightly

TABLE III-24

ENERGY USE PATTERNS ASSOCIATED WITH DIFFERENT AGRICULTURAL PRODUCTION TECHNOLOGIES FOR CASSAVA

	Energy Input per Ton Produced (Kcal/Ton)	Physical Yields/Ha. MT/Ha.	Share of Output Influenced by Factor %		Energy Input per Ton Produced (Kcal/Ton)	Physical Yields/Ha. MT/Ha.	Share of Output Influenced by Factor %
Farm Size (Cultivated)				Cropping			
0-1 Ha.	5,448	2.0	37.2	Mult./Asso.	14,873	2.34	49.2
1-3 Ha.	13,692	2.61	34.0	Solo	9,334	2.70	50.8
3-10 Ha.	18,647	2.99	28.9				
10+ Ha.	0	0	0.0	Chemicals			
				None	6,354	2.35	71.8
Region				1 Quart	19,790	2.80	6.9
North	5,280	2.0	19.2	2 Quart	6,977	5.0	9.2
Northeast	5,482	2.61	19.9	3 Quart	45,503	2.17	4.1
Northwest	16,101	2.99	24.8	4 Quart	44,858	2.60	8.1
Central	19,645	1.87	12.1				
Southwest	17,862	3.47	19.4	Irrigation			
South	0	3.44	2.8				
East	6,790	1.27	1.9	Yes	19,676	3.47	28.9
				No	8,959	2.25	71.1
Technology							
				Power			
High	27,793	3.54	18.3				
Medium	24,078	2.92	29.0	None	1,882	2.17	55.8
Low	0	2.19	52.7	1-2	18,418	3.49	31.8
				3-5	41,610	2.45	12.4
TOTAL ALL	12,057	2.51	100.0	6-7	0	0	0

Source: Appendix D and EFSDR: Statistical Profile, Parts I and IV.

reversed in the case of cassava. A surprisingly large quantity of cassava, 29 percent, is irrigated, and yields increase about 55 percent with a slightly more than doubling of fossil energy per ton of product.

Cassava appears to be less technologically segmented than the basic grains crops. Chemical energy levels are low relative to other major food staples, and there does not appear to be a large fossil energy efficiency drop (see fossil energy efficiency ratios in Table III-25) with added fertilization. While it may be difficult to identify discrete cassava technologies which could be turned to save fossil energy, it should be remembered that both the "fossil" and "total" energy efficiency ratios for cassava are two to three times as high as the basic consumption grain crops (rice, beans, and corn).

6. Peanuts for Oil

Energy use patterns at the farm level by technology for peanuts are outlined in Tables III-26 and III-27.

TABLE III-25

ENERGY USE EFFICIENCY RATIOS FOR CASSAVA

	Economic Efficiency of Energy Use	Efficiency of Output/Input Energy			Economic Efficiency of Energy Use	Efficiency of Output/Input Energy	
	RD$ Output/ 10^6 Kcal	Fossil Energy Input	Total Energy Input		RD$ Output/ 10^6 Kcal	Fossil Energy Input	Total Energy Input
Farm Size (Cultivated)				Cropping			
0-1 Ha.	20.007	605.7	22.4	Mult./Asso.	7.329	221.9	30.3
1-3 Ha.	7.961	241.0	35.8	Solo	11.678	353.6	34.6
3-10 Ha.	5.845	177.0	59.4				
10+ Ha.	0			Chemicals			
Region				None	17.155	519.4	30.6
				1 Quart	5.508	166.7	38.2
North	20.643	625.0	26.7	2 Quart	15.624	473.0	66.0
Northeast	19.884	602.0	44.5	3 Quart	2.395	72.5	22.9
Northwest	6.770	205.0	37.3	4 Quart	2.430	73.6	32.5
Central	5.548	168.0	27.6				
Southwest	6.102	184.8	26.9	Irrigation			
South	0		62.1				
East	16.053	436.0	33.6	Yes	5.540	167.7	37.5
				No	12.166	368.3	30.6
Technology				Power			
High	3.922	118.7	39.9				
Medium	4.527	137.1	44.3	None	57.908	1,753.2	26.7
Low	0		26.7	1-2	5.918	179.2	43.4
				3-5	2.620	79.3	45.4
TOTAL ALL	9.040	273.7	32.3	6-7	0		

Source: EFSDR: Statistical Profile, Part VI.

Peanut production is evenly distributed across the smaller farm sizes–half of it occurring in the 1-3 Ha. size. The technology of the smallest farm size appears to be a very attractive energy saving alternative, since its yield per hectare is the highest, and yet its fossil energy input is only 36 percent of the average. Edible oils are products with a favorable internal demand picture and even significant export potential. Finding a viable small farm oil crop which can be grown at low energy input levels and at acceptable yields is a discovery of considerable importance. A comparison of the fossil energy and total energy efficiency ratios indicates that the energy savings are all substituted for by human labor and animal power, yet this transfer would appear to be highly advisable given the substantial fossil savings, no compromise in yields per hectare. The small farm peanut technology has a fossil energy efficiency ratio of 105, while the other farm size ratios are 41 and 26, and the average for all peanuts is 38.

Strong internal demand for edible oils, the fact that the technology is shared by almost half of all current peanut growers, that it could probably easily be transferred to large numbers

TABLE III-26

ENERGY USE PATTERNS ASSOCIATED WITH DIFFERENT AGRICULTURAL PRODUCTION TECHNOLOGIES FOR PEANUTS

	Energy Input per Ton Produced (Kcal/Ton)	Physical Yields/Ha. MT/Ha.	Share of Output Influenced by Factor %		Energy Input per Ton Produced (Kcal/Ton)	Physical Yields/Ha. MT/Ha.	Share of Output Influenced by Factor %
Farm Size (Cultivated)				Cropping			
0-1 Ha.	52,456	.68	20.3	Mult./Asso.	179,462	.62	32.8
1-3 Ha.	133,525	.68	49.5	Solo	127,302	.64	67.2
3-10 Ha.	212,515	.62	29.0				
10+ Ha.	507,016	.12	1.2	Chemicals			
Region				None	81,538	.64	33.8
				1 Quart	162,082	.68	62.6
North	29,258	.58	3.8	2 Quart	427,693	.27	3.6
Northeast	70,209	.86	5.9	3 Quart	0	1.09	0.1
Northwest	369,405	.49	12.4	4 Quart	0	0	0.0
Central	277,858	.44	3.2				
Southwest	73,927	.79	50.8	Irrigation			
South	75,998	.99	2.1				
East	207,943	.47	21.8	Yes	85,195	.73	25.3
				No	164,386	.60	74.7
Technology							
				Power			
High	298,893	.72	2.4				
Medium	162,611	.61	82.1	None	70,837	.53	16.7
Low	23,314	.72	15.4	1-2	152,863	.66	59.1
				3-5	174,486	.66	24.2
TOTAL ALL	144,388	.63	100.0	6-7	0	0	0

Source: Appendix D and EFSDR: Statistical Profile, Parts I and IV.

of other small farmers, and that there are even good possibilities of export, all support an energy saving shift in peanuts to the smallest farm technology.

Fertilization and mechanization are relatively common in peanuts, even on the smallest farms, which may explain why yields are so constant, yet the energy savings by growing at the smallest farm technology would be approximately two-thirds.

7. Tomatoes, Onions and Potatoes

Tomatoes, onions and potatoes are the only vegetable crops utilizing significant quantities of energy. The survey data available through the SEA-AID Sector Analysis Survey and the PCI-SEA Rural Energy Survey had an insufficient number of crop observations for these crops to allow for reliable results when divided into the numerous technological groups. It is likely that both of these products, when grown for the market as opposed to household consumption, are grown in reasonably limited areas and at relatively homogenous technology.

TABLE III-27

ENERGY USE EFFICIENCY RATIOS FOR PEANUTS

	Economic Efficiency of Energy Use	Efficiency of Output/Input Energy			Economic Efficiency of Energy Use	Efficiency of Output/Input Energy	
	RD$ Output/ 10^6 Kcal	Fossil Energy Input	Total Energy Input		RD$ Output/ 10^6 Kcal	Fossil Energy Input	Total Energy Input
Farm Size (Cultivated)				Cropping			
0-1 Ha.	5.719	104.8	11.0	Mult./Asso.	1.672	30.6	11.2
1-3 Ha.	2.247	41.2	15.5	Solo	2.357	43.2	15.1
3-10 Ha.	1.412	25.9	14.5				
10+ Ha.	0.592	10.8	3.3	Chemicals			
Region				None	3.679	67.5	13.9
				1 Quart	1.851	33.9	14.6
North	10.253	188.0	13.9	2 Quart	0.701	12.9	5.4
Northeast	4.273	78.3	21.6	3 Quart	0		4.7
Northwest	0.812	14.9	7.6	4 Quart	0		
Central	1.080	19.8	9.7				
Southwest	4.058	74.4	16.8	Irrigation			
South	3.947	72.4	20.0				
East	1.443	26.4	12.4	Yes	3.521	64.6	15.3
				No	1.825	33.5	13.0
Technology							
				Power			
High	1.004	18.4	9.1				
Medium	1.845	33.8	13.8	None	4.235	77.6	10.5
Low	12.868	235.9	13.2	1-2	1.963	36.0	14.3
				3-5	1.719	31.5	14.5
TOTAL ALL	2.078	38.1	13.5	6-7	0		

Source: EFSDR: Statistical Profile, Part VI.

Potatoes, more than either of the other two, are likely to be more widely grown and with more variety in the technology.

8. Other Food Staple Crops

In addition to the food staple crops analyzed above, the list of 19 major products includes three important products. These crops (plantains, bananas, and sweet potatoes) are grown essentially without fossil energy. It would not, therefore, be useful to examine energy use by technological level.

9. Tobacco

Energy use patterns in tobacco by technology level are presented in Tables III-28 and III-29.

TABLE III-28

ENERGY USE PATTERNS ASSOCIATED WITH DIFFERENT AGRICULTURAL PRODUCTION TECHNOLOGIES FOR TOBACCO

	Energy Input per Ton Produced (Kcal/Ton)	Physical Yields/Ha. MT/Ha.	Share of Output Influenced by Factor %		Energy Input per Ton Produced (Kcal/Ton)	Physical Yields/Ha. MT/Ha.	Share of Output Influenced by Factor %
Farm Size (Cultivated)				Cropping			
0-1 Ha.	161,879	.89	24.2	Mult./Asso.	198,569	.43	20.7
1-3 Ha.	351,527	.75	35.1	Solo	259,165	1.17	79.5
3-10 Ha.	189,779	1.73	33.4				
10+ Ha.	283,105	.33	7.2	Chemicals			
Region				None	58,708	.60	38.5
				1 Quart	67,162	.55	6.3
North	329,580	1.00	47.6	2 Quart	208,807	1.10	9.0
Northeast	323,484	.77	6.2	3 Quart	749,740	.77	7.9
Northwest	209,934	.69	31.8	4 Quart	369,252	1.79	38.4
Central	0	0	0.0				
Southwest	43,281	.81	7.3	Irrigation			
South	0	1.01	3.4				
East	0	3.4	3.8	Yes	155,479	1.26	29.7
				No	285,044	0.77	70.3
Technology							
				Power			
High	420,463	1.53	42.9				
Medium	246,410	.59	27.0	None	93,019	.80	42.6
Low	0	.73	30.2	1-2	269,890	.75	35.2
				3-5	504,811	1.45	22.2
TOTAL ALL	246,608	0.87	100.0	6-7	0	0	0.0

Source: Appendix D and EFSDR: Statistical Profile, Parts I and IV.

Tobacco is grown almost exclusively in two regions of the DR–the North and the Northwest. Energy input levels are very similar in these two regions and the differences that do exist in energy level appear to be correspondingly reflected in yields. The major production area is in the North region at n energy level of 330 x 10^3 Kcal per ton and a yield level of 1.0 tons/Ha. In the Northwest the energy level is 36 percent lower at 200 x 10^3 Kcal and yields are correspondingly 31 percent lower. There appears to be a fairly homogenous optimal energy use level which cannot be departed from without corresponding losses in yields per hectare.

Tobacco is a predominantly small farm crop, probably due to its high labor requirements. Fifty-nine percent of the crop is grown on farms under 3 hectares in size. Small farms appear to have achieved only about half of the physical yield levels when compared with the 3-10 Ha. farms which, while still relatively small, should not be considered "minifundia" in the agricultural context of the DR. There is insufficient energy difference, either in the "fossil" ratio or the "total" ratio to justify an energy saving policy of shifting to the lower energy or smaller farm technology with its attendant yield decrease.

TABLE III-29

ENERGY USE EFFICIENCY RATIOS FOR TOBACCO

	Economic Efficiency of Energy Use	Efficiency of Output/Input Energy			Economic Efficiency of Energy Use	Efficiency of Output/Input Energy	
	RD$ Output/ 10^6 Kcal	Fossil Energy Input	Total Energy Input		RD$ Output/ 10^6 Kcal	Fossil Energy Input	Total Energy Input
Farm Size (Cultivated)				Cropping			
0-1 Ha.	3.642	21.0	5.2	Mult./Asso.	2.969	17.1	4.3
1-3 Ha.	1.677	9.7	4.8	Solo	2.275	13.1	6.6
3-10 Ha.	3.107	17.9	10.1				
10+ Ha.	2.083	12.0	5.4	Chemicals			
Region				None	10.043	57.9	6.5
				1 Quart	8.779	50.6	7.8
North	1.789	10.3	5.4	2 Quart	2.824	16.3	5.0
Northeast	1.823	10.5	6.7	3 Quart	0.786	4.5	3.3
Northwest	2.809	16.2	6.1	4 Quart	1.597	9.2	6.6
Central	0						
Southwest	13.623	78.6	8.0	Irrigation			
South	0		6.7				
East	0		14.6	Yes	3.792	21.9	7.5
				No	2.068	11.9	5.5
Technology							
				Power			
High	1.402	8.1	5.9				
Medium	2.393	13.8	5.3	None	6.338	36.6	6.0
Low	0		6.9	1-2	2.185	12.6	7.0
				3-5	1.168	6.7	4.8
TOTAL ALL	2.391	13.8	6.0	6-7	0		

Source: EFSDR: Statistical Profile. Part VI.

Irrigated tobacco accounts for 30 percent of all production; irrigated yields are 63 percent higher than dryland tobacco *and* the energy input is actually lower. Irrigated fossil energy utilization is 156 x 10^3 Kcal, while dryland tobacco utilized 1.8 times more at 285 x 10^3 Kcal. It would appear that fertilizer is used as a substitute for irrigation, but the trade is very energy inefficient. To save energy in tobacco, a possible alternative is to expand irrigation to dryland tobacco or move existing tobacco culture in larger proportions to irrigated land. Few situations exist where irrigation is more energy efficient; tobacco appears to be such a case, and the potential of a shift should be further investigated. The fossil energy efficiency ratio for irrigation in tobacco is 21.9, almost double the dryland ratio at 11.9.

10. Coffee

Coffee cultivation, as in most countries in the Caribbean and Central America, is produced competitively by both small and large farms. From Tables III-30 and III-31, it would

TABLE III-30

ENERGY USE PATTERNS ASSOCIATED WITH DIFFERENT AGRICULTURAL PRODUCTION TECHNOLOGIES FOR COFFEE

	Energy Input per Ton Produced (Kcal/Ton)	Physical Yields/Ha. MT/Ha.	Share of Output Influenced by Factor %		Energy Input per Ton Produced (Kcal/Ton)	Physical Yields/Ha. MT/Ha.	Share of Output Influenced by Factor %
Farm Size (Cultivated)				Cropping			
0-1 Ha.	0	1.61	4.9	Mult./Asso.	60,730	1.17	22.6
1-3 Ha.	36,290	1.48	15.1	Solo	54,815	1.89	77.4
3-10 Ha.	53,400	1.28	26.8				
10+ Ha.	68,406	2.04	53.1	Chemicals			
Region				None	0	1.58	77.2
				1 Quart	110,562	2.30	9.5
North	10,103	1.59	29.5	2 Quart	535,741	.73	1.9
Northeast	52,495	1.74	19.7	3 Quart	317,730	2.65	7.4
Northwest	163,927	.81	0.7	4 Quart	305,241	2.03	4.0
Central	11,991	2.04	22.2				
Southwest	81,245	1.35	1.5	Irrigation			
South	145,552	1.52	26.0				
East	0	.71	0.4	Yes	0	0	0
				No	56,150	1.66	100.0
Technology							
				Power			
High	0	0	0.0				
Medium	344,606	1.82	13.2	None	56,150	1.66	100.0
Low	12,159	1.64	86.8	1-2	0	0	0.0
				3-5	0	0	0.0
TOTAL ALL	56,150	1.66	100.0	6-7	0	0	0.0

Source: Appendix D and EFSDR: Statistical Profile, Parts I and IV.

appear that yield levels on the smallest two farm groups have not suffered proportionately from lack of fertilizer use.

There appear to be regional technologies which would allow for high relative yields and energy input levels of about 20 percent of the average. The best of these technologies is found in the North region where a 1.5 ton yield per Ha. is obtained with 10 x 10^3 Kcal per ton of fossil energy and in the Central region where 11 x 10^3 Kcal per ton of energy is used to obtain 2.04 tons/Ha.

While these appear to be opportunities for energy saving expansion of efficient technologies, it is useful to keep in mind some of the particular characteristics of coffee culture which limit the transfer of technologies from one region to another. Perhaps more than any other crop on our list, coffee is an ecologically sensitive crop. The technology for coffee is much determined by the micro-climatic conditions under which it is grown. This phenomenon probably explains a large part of the sizable regional differences in energy use. Fertilizer appears to have little impact on yields, but this may well be due to differences in yield

TABLE III-31

ENERGY USE EFFICIENCY RATIOS FOR COFFEE

	Economic Efficiency of Energy Use	Efficiency of Output/Input Energy			Economic Efficiency of Energy Use	Efficiency of Output/Input Energy	
	RD$ Output/ 10^6 Kcal	Fossil Energy Input	Total Energy Input		RD$ Output/ 10^6 Kcal	Fossil Energy Input	Total Energy Input
Farm Size (Cultivated)				Cropping			
0-1 Ha.	0		3.2	Mult./Asso.	0,138	5.5	2.4
1-3 Ha.	0,231	9.2	2.9	Solo	0,153	6.1	3.7
3-10 Ha.	0.157	6.3	2.9				
10+ Ha.	0.123	4.9	3.7	Chemicals			
Region				None	0		7.2
North	0,831	33.2	5.3	1 Quart	0,076	3.0	2.3
Northeast	0.160	6.4	3.3	2 Quart	0,016	0.6	0.6
Northwest	0,051	2.0	1.2	3 Quart	0,026	1.1	0.9
Central	0,701	27.9	9.0	4 Quart	0,028	1.1	1.0
Southwest	0,103	4.1	3.2				
South	0,058	2.3	1.7	Irrigation			
East	0		5.0	Yes	0		
				No	0,150	5.0	3.3
Technology				Power			
High	0			None	0,150	6.0	3.3
Medium	0,024	1.0	0.8	1-2	0		
Low	0,691	27.6	5.9	3-5	0		
				6-7	0		
Total	0,150	6.0	3.3				

Source: EFSDR: Statistical Profile, Table VI.

responses of different areas, rather than genuine differences in production technology. The energy efficiency ratios are not really relevant for coffee, since it is not a food crop.

The potential of shifting technology in coffee to obtain energy efficiency is too complicated a matter for even cursory examination in this study, for it depends on climatic variables not included.

11. Cocoa

Tables III-32 and III-33 contain the energy patterns by technology for cocoa.

Cocoa is almost exclusively grown at the lowest level of technology in the sense of use of fossil energy either in chemical form or mechanical form. None of the cocoa is mechanized and only 7 percent was fertilized. Interplanting is the commonest form of cultivation and appears to have a much lower energy input than "solo" cultivation. This is not likely to be due to the interplanting technology, but rather because the "solo" cultivation is more often the manner of cultivation in more technical plantation style farms.

TABLE III-32

ENERGY USE PATTERNS ASSOCIATED WITH DIFFERENT AGRICULTURAL PRODUCTION TECHNOLOGIES FOR COCOA

	Energy Input per Ton Produced (Kcal/Ton)	Physical Yields/Ha. MT/Ha.	Share of Output Influenced by Factor %
Farm Size (Cultivated)			
0-1 Ha.	0	.28	3.6
1-3 Ha.	0	.26	9.8
3-10 Ha.	323,578	.31	35.6
10+ Ha.	28,474	.22	50.9
Region			
North	25,060	.22	12.9
Northeast	213,138	.22	59.4
Central	0	.43	21.1
Technology			
High	0	0	0.0
Medium	1,874,095	.37	6.9
Low	0	.25	93.1
TOTAL ALL	129,751	.25	100.0

	Energy Input per Ton Produced (Kcal/Ton)	Physical Yields/Ha. MT/Ha.	Share of Output Influenced by Factor %
Cropping			
Mult./Asso.	4,933	.24	65.5
Solo	367,723	.27	34.4
Irrigation			
Yes	0	0	0.0
No	129,751	.25	100.0
Power			
None	129,751	.25	100.0
1-2	0	0	0.0
3-5	0	0	0.0
6-7	0	0	0.0

Source: Appendix D and EFSDR: Statistical Profile, Parts I and IV.

While a very small proportion of the cocoa is grown with any substantial fossil energy input, it appears that it is very inefficient to do so. Yields show very little response to the energy intensive technologies; in fact, the Central Region, with no fossil energy, has by far the highest yields.

There appear to be viable no-energy cocoa technologies; the policy to save energy would be to shift to them. The total energy savings would not be great, since most production currently uses very little fossil energy.

12. Livestock Products

The data available from the two surveys utilized in this study provided information on energy use in livestock, principally through the feed and forage used in livestock production. The major feeds for pork and poultry were corn, cassava, plantain, and other very low energy fruits and tubers. The energy patterns by technological group for these crops are presented above.

TABLE III-33

ENERGY USE EFFICIENCY RATIOS FOR COCOA

	Economic Efficiency of Energy Use	Efficiency of Output/Input Energy			Economic Efficiency of Energy Use	Efficiency of Output/Input Energy	
	RD$ Output/ 10^6 Kcal	Fossil Energy Input	Total Energy Input		RD$ Output/ 10^6 Kcal	Fossil Energy Input	Total Energy Input
Cultivated				**Cropping**			
0-1 Ha.	0	0	9.3	Mult./Asso.	461,718	612.2	29.7
1-3 Ha.	0	0	10.5	Solo	41,634	55.2	14.9
3-10 Ha.	118,382	157.0	21.6				
10+ Ha.	79,995	106.1	33.4	**Chemicals**			
Region				None	0	0	26.9
				1 Quart	0	0	15.4
North	90,894	120.5	16.3	2 Quart	12,825	17.0	5.6
Northeast	73,675	97.7	21.3	3 Quart	4,008	5.3	5.1
Northwest	0	0	5.0	4 Quart	0	0	0
Central	0	0	44.5				
Southwest	0	0	0	**Irrigation**			
South	0	0	0				
East	0		15.4	Yes	0	0	0
				No	106,443	141.1	22.2
Technology				**Power**			
High	0	0	0				
Medium	5,368	7.1	5.3	None	106,443	141.1	22.2
Low	0	0	26.8	1-2	0	0	0
				3-5	0	0	0
Total	106,443	141.1	22.2	6-7	0	0	0

Source: EFSDR: Statistical Profile, Part VI.

For milk and beef the principal source of energy was natural and cultivated pasture, with corn and some other minor feeds providing a small portion of their energy input. A discussion of technological level for natural pasture and its energy implications would be redundant since there is no measurable energy utilized in range grazing in the DR. The only area in which the data provide insight into energy use and technology in livestock is in the production of cultivated pasture and forage crops.

Only 6 percent of farms with cultivated pasture utilized measurable amounts of fertilizer, only 6 percent of farms with cultivated pasture irrigated their forage crops. Seventy-five percent of all cultivated pasture farms were in the low composite technology group.

There was a wide range in energy level of production by region—the North and Northeast utilized more than three times as much fossil energy per ton of meat or milk produced than the other two energy-using regions, the Northwest and Central regions. The Southeast, South, and East produced meat and milk on cultivated pasture without fertilizers. The clear segmentation of the cultivated pasture technologies by region carries to the type of fossil

energy used. The two high energy regions (the North and Northeast) utilized an average of 206×10^3 Kcal per ton of meat and milk, about half of which was in the form of fossil fuels, with the other half in fertilizers. The Northwest and Central regions had energy input levels averaging 72×10^3 Kcal per ton of meat and milk, which is about 35 percent of the high energy regions and all of the energy is in the form of fossil fuels and none in fertilizer. The last three regions (Southeast, South, and East) used unmeasurable quantities of both types of energy.

Such clear regional segmentation in both the levels of energy use and clear differences in fossil fuels and fertilizers is unusual, to say the least. The sample sizes are large enough to make it highly improbable that these differences are due to errors in the surveys. What it probably implies is that ecological characteristics in these regions have given rise to clearly differentiated technologies. The energy differences are so large that it raises a possibility that some shifts may be possible, with considerable energy-saving implications. Cultivated pasture is probably a small part of the total energy input into beef production, but it is the major energy-using feed source for one of the largest agricultural activities in the DR. It may be worth examining with further study the possibility that the technologies for cultivated pasture in the low energy regions could be transferred to the other regions with consequent energy savings.

PART IV

ENERGY USE PROJECTIONS

This part deals with projecting energy use patterns into the future to estimate rough energy needs to the year 2000. The projections are of four types. The first is a simple attempt to project the demand for energy based on existing trends in production and consumption of food products. In these first projections no allowance is made for alteration in energy input patterns which now exist. The second projections involve alterations in the mix of food products produced to save energy and to generate low energy exports to help pay the increasing petroleum import bill. The third set of projections is based on energy policy options which alter the management technology of agricultural production to create energy savings. The last projections involve changes in energy technology itself; that is, an alteration of the basic energy use coefficients currently in use in the DR. (Given the importance of energy in the food processing sector, and a good time series of data on *changing* energy coefficients in this sector, food processing has been chosen for the last set of projections.)

The various projections are made at five-year intervals, beginning with 1980 and ending at the year 2000.

A. ENERGY USE PROJECTIONS BASED ON PRODUCTION AND CONSUMPTION TRENDS FOR FOOD PRODUCTS

For almost a decade from 1966-1974 it appeared that the DR economy was about to make a major leap into sustained high growth. This created widespread expectations among planners, and to some extent within the broader society, which the energy crises, a series of natural disasters, and other less obvious factors shattered in the mid and late 70's. Whether the post 1974 trends will continue or whether the economy will reassert itself with high growth rates require predictions far beyond the capacity of the simple projections models mounted here. The best that can be accomplished is to adopt, *a priori*, a basic position and then explore the quantitative implications of that choice in energy terms.

1. Production Trends for Major Agricultural Products

The reasoning behind the production trend model is that it would be useful to know what the energy situation will be like by the year 2000 if the production trend directions established by the economy in the recent past (1971-1978) were to be extrapolated (with some small modifications) to the end of the century. To be sure, this is a less than optomistic picture; the economic path traced in the base period chosen started in dramatic growth and

ended in a partial economic slump. Yet the projection is not unrealistically dour; the data do not include the devastating hurricane of 1979, which may make even these projections optomistic, at least through the middle of the 1980's.

For the purposes of this projection we have excluded sugar cane for two reasons. The first is that the subject deserves separate analysis, and second, the quantities are so large that they would mask the influences we have data on and wish to observe. A slight change in the sugar cane trend or coefficients could obscure in the total all of the changes which are observed in energy use in the rest of the food sector. Having said that, it is useful to note that it implies that sugar cane is preeminently important; it should be given the considerable attention it is receiving, and perhaps even more.

a. Historical Trends in Farm Level Agricultural Production and Projections of Fossil Energy Requirements

Table IV-1 contains the data on production trends in the decade of the 1970's for the principal food products in the DR. The energy input coefficient in the first column is the $Kcal^6$/ton input measured for the base year 1978. These projections assume that this coefficient will remain constant during the period of the projections.

The table (IV-1) also outlines the values taken by each projection equation and the form of that equation. The coefficient of determination (R^2) indicates how well the observations match the fitted equations. The forms of the simple regression equations (linear, semi-log, or exponential) were selected simply on the basis of the R^2 values obtained from testing different forms. The projections models are simple, perhaps even crude, but the aim of this section is not to refine the projections methodology, it is to illustrate some aim of general quantitative implications of the findings of the study projected into the future.

If production trends were to continue, the overall result would imply a non-sugar demand for farm level fossil energy of 336.7 x 10^6 Kcal in 1985, 403.9 x 10^6 Kcal in 1990, and 540.4 x 10^6 Kcal in 2000. This is 1.5 and 2.17 times the 1978 estimated use in 1985 and 2000, respectively. Table IV-2 contains the estimates for the 19 major products plus a few extra to show that some fruit and specialty crops are not large fossil energy consumers. Remember that inclusion of sugar cane would increase the total requirement for fossil fuel by approximately 1,000. x 10^6 Kcal by the year 2000.

Rice is the product with the most dynamic growth trend; it would increase by 2.65 times in the 20-year period. Since it has a high energy input coefficient, it has a very heavy influence on the total trend. Beef, tobacco and tomatoes together require only 40% of that required by rice. Potatoes show a downward trend which would eliminate them from the diet during this period. We chose to ignore this trend and allow potatoes to drop only to the 13,000 MT production level. Cassava production is assumed to increase at a constant rate of 1,000 MT/year. Milk had a very slow extrapolated growth trend, increasing only 24.4 percent during the period.

TABLE IV-1

PRODUCTION TRENDS FOR MAJOR AGRICULTURE PRODUCTS AND ESTIMATED EXTRAPOLATION PARAMETERS

Product	Fossil Energy Input per Ton 1978 Kcal/T (X10⁶)	Production in 1000 MT 1971	1972	1973	1974	1975	1976	1977	1978	Production Projection Model R^2	Parameters a	b	Type of Model
Beef	.6402	1,711.7		49.1	49.8	44.9	48.3	44.6	51.6	.405	43225	1620	Linear
		41.0											
Tobacco	.2466	32.7			33.6	34.6	45.3	34.9	54.2	.474	26828	2403.6	Linear
Rice	.3972	117.1		195.8	259.4	218.6	312.2	308.0	339.4	.891	132271	256.28	Linear
Cocoa	.0214	35.0			38.3	30.9	33.1	34.4	36.9	.989	28979	1952.7	Linear
Plantain	0	1,070.2			497.6	202.0	244.8	247.8	260.0	.773	196470	16490.5	Linear
Chicken	.0285			23.5	32.0	40.4	42.5	37.1	44.9	.707	27613	2848.6	Linear
Coffee	.0562	44.4			108.6	103.7	113.9	120.4	86.8	.685	51957	30344.9	Semi Log
Milk	.0068			254.0	274.0	246.0	259.0	268.0	279.0	.261	251.3	3.429	Linear
Cassava	.0121				191.6	190.6	170.7	184.8	185.2	1,000/year growth assumed			
Pork	.0437	876.2		12.2	12.5	12.8	13.2	13.9	17.5	.721	10613	884.28	Linear
Beans	.1724	23.0		32.0	43.7	35.7	36.7	35.8	41.6	.497	25943	1974.4	Linear
Corn	.0551	54.0		51.0	48.8	46.1	66.6	65.4	66.0	.401	47036	2135.7	Linear
Sweet Pot.	.0022	120.1			92.5	79.7	83.7	78.0	99.3	.044	83093	1196.2	Linear
Onion	.1082	9.1			12.0	9.6	9.0	5.9	13.6	.012	9398	101.8	Linear
Peanut	.1444	44.1			59.0	51.2	43.1	51.6	74.0	.31	42046	0.45	Exponential
Banana	0	489.1			359.4	363.6	377.9	373.5	375.7	.681	357442	1860	Linear
Potato	.2279	16.5			29.6	27.3	22.0	12.2	11.6	.127	18688	-553.9	Linear
Tomato	.1628	73.6			121.7	132.7	123.0	134.8	125.6	.068	124699	966.4	Linear
Other													
Coconut	.002	1,441.7			284.3	291.2	298.3	305.3	312.3	1.00	277298	7010.5	Linear
		438.9											
Oranges	.005				47.7	44.9	49.5	50.4	51.3	0.61	45038	1255.0	Linear
Avocado	.005				187.6	190.0	192.4	194.8	199.7	0.971	184261	2892.2	Linear
Mango	.003				178.7	180.8	182.9	185.0	187.1	1.00	176637	2109.0	Linear
Peppers	.0969				11.2	11.8	12.3	13.8	13.9	0.941	10416	745.3	Linear
Green	.10				6.9	7.1	7.4	7.6	7.8	1.000	6737	223.8	Linear

Sources: Fossil Fuel Input Coeficients, Table III-2; Production Estimates, ONE, Republica Dominicana en Cifras, Seccion 3.2, Vols. VIII & IX.

b. Total Fossil Energy in the Food System Projection

Table IV-3 contains estimates of the total fossil energy requirements in the food system projected to the year 2000 based on trends in the production 1971-1978 in major food products. Added to the farm levels requirements is the necessary energy for processing, transport, storage and marketing.

The projection in total food system energy is driven by the same projections in food production as shown in Table IV-2. The only difference lies in the energy input coefficients

TABLE IV-2

PROJECTIONS OF FOSSIL ENERGY USE AT THE FARM LEVEL FOR MAJOR AGRICULTURE PRODUCTS, 1980-2000

Product	Production Projections 10^3 MT					Energy Use Projections 10^9 Kcal					% Energy Change
	1980	1985	1990	1995	2000	1980	1985	1990	1995	2000	1978-2000
Beef	53.0	61.1	69.2	77.3	85.4	33.9	39.1	44.3	49.5	54.7	65.5%
Tobacco	50.8	62.8	74.9	86.9	98.9	12.5	15.6	18.4	21.4	24.3	82.5%
Rice	388.5	516.6	644.8	772.9	901.1	154.3	205.2	256.1	307.0	357.9	165.5%
Cocoa	40.6	50.5	60.2	69.9	79.7	.8	1.0	1.2	1.4	1.7	115.8%
Plantain	295.4	377.8	460.3	542.7	625.2	0	0	0	0	0	
Chicken	50.4	64.6	28.8	93.1	107.3	1.4	1.8	2.2	2.6	3.0	138.9%
Coffee	121.6	133.9	142.6	149.4	154.9	6.8	7.5	8.0	8.3	8.7	78.5%
Milk	279.0	296.0	313.0	339.0	347.0	1.8	2.0	2.1	2.3	2.3	24.4%
Yucca	188.0	193.0	198.0	203.0	208.0	2.2	2.3	2.3	2.4	2.5	12.3%
Pork	17.6	22.1	26.5	30.9	35.3	.7	.9	1.1	1.3	1.5	102.1%
Beans	45.6	55.5	65.4	75.3	85.1	6.3	7.7	9.1	10.5	11.9	104.8%
Corn	68.4	79.0	89.7	100.4	111.1	3.7	4.3	4.9	5.5	6.1	68.3%
Sweet Pot.	91.4	97.4	103.4	109.4	115.3	.2	.2	.2	.2	.2	16.1%
Onion	10.4	10.9	11.4	11.9	12.4	1.1	1.1	1.2	1.2	1.3	-8.5%
Peanut	65.6	82.1	10.2	12.3	160.3	9.4	11.8	14.8	18.5	23.1	116.5%
Banana	171.8	181.1	190.4	199.7	209.0	0	0	0	0	0	0 %
Potato	13.1	13.0	13.0	13.0	13.0	2.9	2.9	2.9	2.9	2.9	11.5%
Tomato	131.4	136.2	141.1	145.9	150.7	26.2	27.2	28.2	29.1	30.1	20.1%
Other Crops											
Coconut	326.3	361.4	396.4	430.5	466.5	.6	.7	.7	.8	.9	49.4%
Oranges	53.8	60.0	66.3	72.6	78.9	.2	.3	.3	.3	.3	53.8%
Avocado	204.5	218.9	233.4	247.8	262.3	1.0	1.0	1.1	1.2	1.3	31.4%
Mango	191.4	201.9	212.4	223.0	233.5	.5	.6	.6	.6	.7	24.8%
Peppers	15.6	19.3	23.0	2.6	26.8	1.5	1.8	2.2	2.5	2.9	91.6%
Green	8.3	9.4	10.5	11.6	12.7	.8	.9	1.0	1.1	1.2	65.6%
Total Energy at Farm Level						270.1	336.7	403.9	471.8	540.4	117.0%

Source: Calculated from data in Tables III-1 and IV-1.

utilized. In Table IV-3 these include processing, transport, marketing, and storage fossil fuel requirements for each crop.

The percentage increase in energy use in the food system as a whole is slightly less than the growth rate at the farm level. For the overall food system, energy use would grow 97 percent during the next 20 years. The total energy required by the year 2000 in the food system would be 1,183,025.1 x 10^6 Kcal. By 1985 use would be up 1.29 times and by 1995 1.72 times (over the 1978 base year. It may be noted that fossil energy requirements in the non-farm stages of the overall food system are not projected to increase as fast as at the farm level. This result is partially the consequence of assuming that future proportions of

TABLE IV-3

PROJECTIONS OF TOTAL ENERGY USED IN THE FOOD SYSTEM

FOR MAJOR AGRICULTURAL PRODUCTS

1980 - 2000

	Energy Input in Food System/Ton Produced 10^6 Kcal	Energy Use in 10^6 Kcal				
		1980	1985	1990	1995	2000
Tobacco (Rama)	.4936	25,074.9	30,998.1	36,970.6	42,893.8	48,817.0
Cocoa (Grano)	.2128	8,639.7	10,767.7	12,810.6	14,874.7	17,002.7
Coffee (Cereza)	.8624	105,062.4	115,475.4	122,978.2	128,842.6	133,585.8
(Export Crops)		(138,777.0)	(157,241.2)	(172,759.4)	(186,611.1)	(199,405.5)
Rice	.5246	203,831.8	271,053.5	338,274.7	405,495.9	472,717.1
Beans	.2277	10,402.9	12,650.8	14,898.3	17,146.5	18,471.2
Corn	.2700	18,471.2	21,354.6	24,237.9	28,741.0	30,004.3
Plantain	.0380	11,225.7	14,358.9	17,492.1	20,625.3	23,758.5
Cassava (Yuca)	.0580	10,904.0	11,194.0	11,484.0	11,774.0	12,064.0
Banana	.0401	17,231.3	18,163.6	19,095.9	20,028.2	20,960.6
(Major Staples)		(272,066.9)	(348,775.4)	(425,482.9)	(503,810.9)	(577,975.6)
Sweet Potato	.0533	4,875.1	5,193.9	5,512.7	5,831.5	6,150.3
Potatoes	.2923	3,843.5	3,799.9	3,799.9	3,799.9	3,799.9
Tomatoes	.2265	29,776.6	30,871.0	31,965.5	33,059.4	34,195.2
Peanuts (Oil)	1.0638	69,888.5	87,361.4	109,201.2	136,501.5	170,627.1
Onions	.2204	2,295.7	2,407.9	2,520.1	2,632.2	2,744.6
(Minor Crops)		(110,683.4)	(129,634.1)	(152,999.4)	(181,824.5)	(217,517.1)
Beef (Meat)	.9359	49,857.0	57,470.1	65,083.4	72,696.6	80,309.8
Milk	.3543	98,849.7	104,872.8	110,895.9	116,919.0	122,942.1
Poultry (Meat)	.0918	4,626.9	5,934.4	7,241.9	8,549.3	9,893.5
Pork (Meat)	.1326	15,832.5	19,789.8	23,747.0	27,705.1	31,662.4
(Livestock Products)		(169,166.1)	(188,067.1)	(206,968.2)	(225,870.0)	(244,807.8)
Total Energy in Food System		587,104.3	706,950.4	832,480.0	963,960.8	1,098,018.2

Source: Calculated from data in Table IV-2 and Table III-6.

production increases that enter into processing and other market activities will be the same in the future as at present.

2. *Food Consumption Demand Projections*

In order to project food demand as contrasted to food production projections which are described above, we elaborated a simple model of population growth, per capita income growth, and income elasticities of demand for food. This projection provides a rough indication of how both food, and the consequent energy use for food, would change between 1978 and 2000.

a. Projection Model

The projection model is of the form:

$$C_t = c_o \left(\frac{y^t}{y_o}\right)^{\eta} P_t$$

Where: C_t = total consumption in the future year (t = 1980, 1985, 1990, 1995, 2000)
c_o = per capita consumption in the base year (0 = 1978)
$\frac{y^t}{y_o}$ = expected change in per capita disposable income (or family income)

η = income elasticity of demand for the particular food product
P_t = expected total population in future years.

The actual projections of the population and income factors are found in Appendix G. The computation of the income elasticities of demand for the food products was based on household consumption data of the Banco Central and the calculations are shown in Appendix G. Since the potential of expansion of food products depends on demand, which in turn depends on the income elasticity, it may be useful to report the results of the income elasticity computations. Banco Central data do not provide coverage of all the 19 major crops selected for the present study. It is necessary to assume that calculated coefficients are approximately correct for additional, similar, products.

	Income Elasticity of Demand
Rice	0.1607
Bread	0.3345
Sweet Potatoes	-0.3178
Potatoes	0.3348
Cassava	-0.2859
Sugar (Refined)	0.5056
Beans	0.0969
Onions	0.3989
Tomatoes	-0.0071
Banana	0.2782
Plantain	0.1002
Poultry	0.8508
Pork	0.8519
Milk	0.4784
Edible Oils	0.3276

The meat (pork and poultry) elasticities are high, as expected, yet there are no food products with elasticities over 1.0. The coarse food staples (cassava and sweet potato) have the expected negative elasticities, but bananas, plantains, and potatoes all have reasonably

positive coefficients. The sugar coefficient appears to be high. However, the most suspicious value is that for tomatoes, which seem to be low. In general, the calculated values are probably not very accurate, given the arrangement of the available basic data and the number of observations (income classifications). For present purposes (and in most cases) the degree of error isn't too important for elasticity values in the general range of 0-1.0 because the key variable in estimating future demand is expected change in absolute population size.

b. Results of the Demand Projection

Table IV-4 contains the projections based on the above described demand model. By comparing the percentage increases in production and consumption from the demand model with the same product in the production trends model (Table IV-2), we can see the apparent divergence between supply and demand trends. The demands are understated by the amount of animal feed, seed and waste that might be involved. According to the data in Part IV of EFSDR: Statistical Profile, the non-human consumption shares are generally under 5 percent at the farm level. Tomatoes and corn are exceptions at about 12 percent.

TABLE IV-4

PROJECTION OF ENERGY USE BASED ON TRENDS IN CONSUMPTION FOR SELECTED FOOD PRODUCTS

	Product Demand 10^3 MT					Energy Demand 10^9 Kcal					% Increase in Energy Demand
	1980	1985	1990	1995	2000	1980	1985	1990	1995	2000	
Rice	303.60	365.26	440.34	530.86	640.06	159.29	191.62	231.00	278.49	335.78	88.6%
Beans	56.54	66.98	79.52	94.40	112.07	12.98	15.38	18.26	21.68	25.74	169.4%
Corn (Flour)	6.84	6.58	6.35	61.3	5.91	1.84	1.77	1.71	1.65	1.59	– %
Plantain	353.41	419.26	498.11	591.80	703.16	13.43	15.93	18.92	22.48	26.72	170.0%
Yucca	212.95	229.87	248.80	269.29	291.40	12.35	13.33	14.43	15.61	16.90	57.3%
Banana	52.27	64.71	80.26	99.54	123.49	2.09	2.59	3.21	3.99	4.95	67.1%
Sweet Potato	76.45	81.89	87.95	94.47	101.44	4.07	4.36	4.68	5.03	5.40	2.1%
Potato	24.54	35.81	45.03	56.62	71.21	7.17	10.46	13.16	16.55	20.81	510.0%
Tomato	20.57	26.62	34.50	44.72	57.98	4.66	6.03	7.81	10.12	13.13	53.8%
Peanut	63.33	79.34	99.59	125.00	156.92	67.37	84.40	105.94	132.97	166.94	111.9%
Onions	9.27	11.26	13.72	16.70	20.34	2.04	2.48	3.02	3.68	4.48	49.6%
Milk	226.01	293.71	382.33	497.66	648.01	80.07	104.06	135.46	176.32	229.59	132.2%
Poultry	38.52	54.79	78.03	111.13	158.36	35.3	5.03	7.16	10.20	14.53	252.3%
Pork	9.34	13.29	18.93	26.96	38.43	8.36	11.89	16.94	24.13	34.40	119.7%
Total										900.96	

Source: Data and tables in Appendix G.

The products included are the principal "food" consumption products; the main agriculture export products have been excluded from the projections.

i. Rice. Projecting the last decade (1971-1978) production trends to the year 2000 resulted in an estimated output in 2000 of 901,000 MT, a rise of 165 percent. The demand model projects a year 2000 demand of only 640,068 MT, an increase of only 88 percent. It would appear that rice cannot likely continue to expand at the historical rate without exceeding the capacity of the domestic market to absorb it. Both of these estimates are rough, but the large differences point to a marked divergence in the two trends. Since rice is such an important energy consuming product, it would appear that the projected energy requirements in the production trends model are likely to be overstated.

ii. Beans. Beans are an important possible nutrition source; the government in the DR considers production emphasis a possible major direction for increasing the quality of the diet. Beans unfortunately have a relatively low income elasticity of demand (.0969). Nonetheless, the demand growth is estimated at 169 percent, which exceeds the projected production growth by 65 percent. The rationale for estimates which are made later (substituting beans for rice) would appear to be supported by the opposite production and consumption trends for these two products.

iii. Subsistence Staples. The crops which might be loosely termed subsistence staples (cassava, plantains, bananas and sweet potatoes) appear to have reacted about as would be expected in both of the projections. In the production projection cassava increased by only 12 percent, sweet potatoes by 16 percent, bananas actually decreased, but plantain increased by a large 140 percent. In the demand projections, these production trends are supported; bananas decrease by a large margin (67 percent), cassava and sweet potatoes increase by moderate or small amounts (57 percent and 2 percent), and plantain increases by a large margin of 170 percent. The exception to the general trend in slow growth or actual decreases in subsistence staples is the case of plantain, for which no useful explanation is at hand.

iv. Meat. Beef was omitted from the projections due to the way in which the income elasticity data were available based on the Banco Central survey. We were unable to convert the detailed consumption estimates back to carcass weight equivalents. Pork and poultry probably represent the basic trends for beef as well. For pork and poultry, the year zero production estimates show a 102 percent and 138 percent increase, respectively; the demand projections indicate approximately the same for pork (120 percent), but for poultry the total demanded is almost double that projected for supply. This would appear to justify our considerable emphasis on poultry as one of the major commodity mix options to reduce energy requirements.

c. Overall Implications of the Food Demand Projection for Energy Use

When the energy differences for each of the products are summed for the demand projection, the total energy used in the year 2000 is 900,970 x 10^6 Kcal for the food consumption products included in the demand model. This figure is not comparable with the totals shown in other tables for the food system, since export crops and beef are excluded. When the same products are included for comparison, based on projections in Table IV-3, the energy use in

the year 2000 based on demand trends is 1,180,700 x 10^6 Kcal. The result implies energy requirements from the demand side that are 10 to 15 percent higher than estimated from the production trends.

Since both of the models are very crude it may be unwise to place too much emphasis on a 10 percent differential. Nevertheless, the evidence supports the notion of what might be expected: current trends in domestic food demand patterns will increase reliance on fossil fuel energy forms.

The largest energy user in the non-sugar food system is rice; the projections indicate that its production trend exceeds its probable demand by a large margin. At the same time, beans, an energy and nutrition efficient alternative, have a production trend which is substantially short of its demand trend. The policy conclusion would be to undertake credit and technical assistance actions to increase bean production and to gradually decrease rice.

The second conclusion is to extend credit and technical assistance to the production of poultry, at least as far as the current low energy technology can be expanded. Poultry production trends would not appear to be sufficient to handle projected demand, and even excess production which would drive down absolute poultry prices and decrease the poultry price relative to the beef, thus encouraging an energy saving product substitution. Energy efficient demand trends also exceed supply for milk and potatoes. Potato substitutes might be found, but milk substitutes seem less likely—satisfying demand will keep pressure on fossil fuel supplies.

B. ENERGY USE PROJECTIONS BASED ON POSSIBLE ENERGY SAVING CHANGES IN THE PRODUCT MIX

In section III-B we laid the foundation for consideration of lowering DR dependence on fossil fuel imports by altering the mix of products produced. As noted there are major differences in the quantities and types of energy required to produce major crops. A different overall mix might not lower agricultural sector incomes or endanger nutrition levels, yet still save on fossil fuel energy.

Nevertheless, there are important limits on the potential of product mix changes to reduce fossil fuel dependence. The first limit is consumption demand. The current mix of products is in large part a response to food tastes, preferences and effective demand found within the DR population. There may be some possibility to substitute an energy efficient product such as chicken for an inefficient one like beef, yet there are serious limits to how far consumption patterns can be tilted. The second limit on crop mix change is the degree of substitutability of the production resources themselves. Some resources are not easily shifted from production of one crop or product to another. For example, the natural pasture range which supports beef grazing cannot be easily turned over to poultry production.

While both of the limits on crop mix flexibility place restrictions on the range of viable policies in this regard, there is still considerable room at the margin for change. There is probably more flexibility in achieving resource substitutions than in altering consumption patterns, at least in the short run. This leads us to examine alternatives for shifting production without altering consumption patterns.

Allowing for carry-over stocks, production and consumption must equal only in an economy isolated from international commerce. The central role of trade has been to allow countries to take advantage of production opportunities far beyond the capacity of their own consumption markets to absorb. Where there is a basis for trade founded in differences in factor endowments, trade can be looked to as a way of escaping the binding nature of a country's consumption patterns. While the role of this study is not to explore export potentials, it will explore crop mix changes on the grounds that there is reason to believe that there exists sufficient differences in energy factor endowments between the DR and its potential trading partners to form the basis for increased trade. For example, there is clearly a difference in fossil energy endowment between the DR and neighboring countries like Venezuela and Mexico, and there is a clear difference in human energy (labor) endowment between the DR and the USA.

In this section we show examples of the reductions the DR agricultural production energy bill might experience by altered output mixes. The aim is to create some indication or impression of the magnitude of what might be achieved and provide some indicative values of the associated economic, energy, or other impacts. The tests cover expansion of cocoa output/export, import substitution of peanuts for edible oils, and consumption of corn/beans in place of rice.

1. Export Expansion of Energy Efficient Products (Cocoa)

The DR imports large quantities of petroleum, and it exports agricultural products among others. The agricultural products it exports embody some of the petroleum it imports. To pay for the petroleum imports, it would be wise to try to export products which require the least imported energy. Cocoa is an export product for which there should be good long-term export potential and which is also a product requiring relatively little fossil energy in the production process. There are other products, not now traditional exports, which fit this description of energy efficiency and with good external demand prospects. Among them are poultry and pork (unprocessed).

Table IV-5 shows that a 20 or 40 percent expansion of cocoa output (1980) would raise the amount of energy required to produce the crop by 18 to 36 percent. However, the overall upward impact on farm production level use of fossil energy would be no more than a maximum of about 0.1 percent. The percent increase in all energy going to the non-sugar food system would be somewhat greater, 0.2 percent to about 0.5 percent.

These estimates utilize the 1980 quantity projections of Table IV-2 as a basis for the 20 percent and 40 percent increases. The difference between these results and the production energy reported in the 1978 base year (Table III-1) is taken to be the needed additional net energy as of 1980. The overall energy impacts on the agricultural sector in 1985, 1990, and so on would be obtained by allowing about 0.1 percent increase in total farm level energy projections (Table IV-2) and 0.25 to 0.5 percent increase in the whole food system projections (Table IV-3).

TABLE IV-5

ENERGY USE PROJECTIONS FOR PRODUCT MIX CHANGES

	Production (Tons)			Energy Increases (Decreases)			Ag Sector Food System	
	1978	Assumes 1980+	Δ Qty	Δ Req.	% Δ Crop	% Δ Farm	Δ Req.	% Δ
Cocoa (20%)	36,960	44,352	7,402	158	18.14	0.039	1,573	0.231
Cocoa (40%)	36,960	51,744	14,784	316	36.28	0.119	3,146	0.462
Peanut	75,000 Tons							
Ave. Fossil Energy	74,074	140,697	66,623	9,680	101.405	3.627	70,873	10.411
Small Scale Energy	"	"	"	3,531	37,219	1.331	64,784	9.516
Bean/Corn	Units of -1,000 Tons			(295)	0.1911	.1112	(272)	0.040
Substitution	-20,000 Tons				2.0	4.0		8.0

Generally speaking, these results imply a considerable foreign exchange gain for little additional chemical and fossil fuel energy expansion.

2. *Import Substitution Utilizing an Energy Efficient Product (Peanuts)*

In 1978 the DR imported about 27.5 thousand metric tons of edible oil equivalent.[26] Assuming an extraction rate for peanuts of 20 percent, it would require over 100,000 MT of domestically grown peanuts to cover current inputs. For our example calculation, we assume an increase of 75,000 MT in peanut production. At yields of 2.5 MT/Ha., the land requirements would be 30,000 Ha. (Table IV-5).

Imagining an increase in the projected 1980 total quantity of peanuts by 75,000 MT results in a total of 140,697 MT. This is an increase of 66,623 MT over 1978. Proceeding in the same manner as for the cocoa examples, the table shows an estimated energy increase in farm level production of 8,620 x 10^6 Kcal. This would represent a 101 percent increase for the crop, and a 3.6 percent increase at the production level. However, domestic food system processing beyond the farm level requires an additional amount of energy (a total of 70,873 x 10^6 Kcal, an amount that would add 10.5 percent to the total food system energy

[26]Source: DR en Cifras, Vol. IX, Table 311-16.

bill. All other energy projections for 1985, 1990 and so on (Tables IV-2 and IV-3) would rise by the same percentages (decreasing slightly through time).

It should be noted that this fossil energy "cost" for an oil import substitution program (1980 terms) *is not* as low as can be achieved *at the farm level.* All of the basic calculations assume that current average energy farm level energy Kcal/ton inputs are continued. However, if, as part of the program, the 75,000 ton increase is obtained by producing at the smallest farm level technology, the energy bill will fall to the values shown on the second line of the example (Table IV-5). At the farm level the savings would be about 63 percent and they would be about 9 percent for the food system overall.

It is unfortunate that processing requirements are such a large portion of the total; however, expanded production of any other oilseed crop such as soya would only make the situation worse.

When the peanuts example is contrasted with that for cocoa, the well known issue of "how far to push import substitut on?" is highlighted again. Sometimes it is better to keep importing if there are better ways to earn the necessary foreign exchange.

3. Corn/Bean Substitution for Rice

Rice production absorbs a lot of farm level energy in the DR. On a Kcal/ton basis, rice is about 7.2 times as demanding as corn and about 2.3 times as demanding as for beans at the farm stage of the food system.

Taking into account the additional energy requirements for processing and handling in other stages of the food system, the rice/beans ratio would be 2.3 and the rice/corn ratio would be 1.94. We know that corn/beans planted in association are an attractive subsistence crop in many areas having ecological characteristics similar to the DR. If corn and beans replaced rice in areas technically suited for such a switch, quite a bit of energy could be saved at the farm stage.

According to Appendix E, the calories/MT content for the three crops is:

10^4 Kcal		
Rice	Corn	Beans
3,624	3,525	3,431

On a simple caloric test, all three crops substitute for each other on a 1:1 basis. Thus, we may say that, no matter what the exact proportions, the bean/corn association might take

on an energy content per ton of 3,500 x 10^4 Kcal. For convenience, suppose the harvesting ratio is 60 percent corn/40 percent beans. Then the farm level fossil energy requirement would be about .102 x 10^6 Kcal/MT. At the end of the entire food system chain, the factor would be about .253 x 10^6 Kcal/MT.

For every ton of rice production switched to corn/beans, we have a net energy savings:

Farm Level	Overall Food System Level
.397 - .102	.525 - .253
.295 ↓	.272 ↓

This result suggests that the basic gain in fossil energy savings is accomplished at the farm level. A small amount of this gain is lost on net balance, as part of the processing and handling process

Every 1,000 tons of rice substituted will save 0.2 percent on the rice crop fossil energy bill and about 0.1 percent of foss l energy at the farm production level. Twenty thousand tons would equal savings of 4 percent and 2 percent at the crop and farm stage or 0.8 percent for the overall food system fossil energy bill.

Note that the calculations shown are based on the *net* interchange of rice for beans/corn on a 1:1 basis. Twenty thousand tons is only about 5 percent of the projected 1980 production amount. A 20 percent rice shift in the direction discussed would save about 3.2 percent on the food system fossil energy bill. As we shall see, greater energy conservation might be achieved by shifting rice technology.

C. *PROJECTIONS OF CHANGES IN ENERGY USE IN FOOD PROCESSING TECHNOLOGY*

In addition to changing the mix of products, or reordering emphasis on the production technology they already utilize, another possibility is modification of fossil energy technology itself. Modifications can be made in the array of energy using machines and devices and the quantities of fossil fuel utilized per output unit. In other words, existing known management techniques can be modified.

In Part III-C above we briefly discussed introduction of new technology. In that section we provided some appreciation for the current depth of energy technology in the Dominican Republic based on survey information covering types of energy in use at various stages of the food system and according to energy end use devices in households and at the farm level and intermediate processing and handling activities. The aim of this section is to move from that fairly detailed profile to some impressions about the future. In this process we would prefer to move directly from the data in the profiles to some appropriate projections. Unfortunately, the field data available do not contain any trend information that would make that approach workable. We are forced therefore to rely upon a substitute and partial method.

The method is to assume that trends in energy utilization reported in secondary sources *reflect underlying alterations in technology.* The case chosen for projection is the

energy use patterns in food processing and handling activities. Since the 1974 oil crisis, prices for fossil fuels have risen dramatically. Many fuel consuming industries have attempted to adjust their production technology to reduce their fuel costs. The data below indicate that in the DR there have been a number of shifts in fuel use technology in food processing. The projections extrapolate the changes in domestic processing and handling patterns for each of several agriculture processing activities to the year 2000, based on the trends in energy use change expressed in the 1973-77 data. A full outline of these projections and the underlying model utilized are contained in Appendix F.

The basic data covering trends in food processing energy is reported by industry type and may or may not include transport and storage. We assume that the trends in reported industrial use will approximate trends in transport and storage as well. Thirteen food processing categories are reported, but they do not exactly match the 19 major food products that are the object of the present study. Baking, brewing, animal feed, and soft drink processing coefficients could not be used. Meat processing energy trends are utilized for more than one product; all vegetables are assigned a common set of coefficients calculated for the canning and storage of fruits and vegetables. As a result, in the case of vegetables, the coefficient set (processing sector code 3) is utilized six times. This means that the projections of energy use in major vegetables are all based on common correction factors; the only reason why there is any difference in outcomes is because of the underlying differences in the reported amounts of base year (1978) processing, storage, marketing and transport energy involved in each case.

The correction factors change from target year to target year and are shown in Table IV-6.

Table IV-6 contains a summary of the projections for each of the five-year periods from 1980 to 2000. From the table it can be seen that the internal changes in energy consumption are moving in a variety of ways depending on the particular food processing activity.

Base year Kcal/ton energy requirements for processing are calculated from Tables III-5 and III-1. The processing sector code matches those defined in Appendix F,Table 1. In that same table, the trends of energy used in processing commodity groups form the basis of a time series of ratios of Kcal energy used in various food processing categories to create reported industrial outputs. Some ratios appear to be falling over time. The trend in the time series is projected forward to predict future values of energy needed to produce each ton of output in the various industrial food processes for each of the five target years (see Appendix F). In some cases, 1978 base year data do not show any processing energy going into a product (beans, plantain, etc.). In such cases we have estimated what might be a possible value for processing and handling if such products were processed in future years. Each projected Kcal/ton value is next converted to a percent change over the original 1978 base. These percentages are brought to Table IV-6 as correction factors and are multiplied against the base year energy figures as appropriate. In this way the base year energy input data are altered to fit past technological trends in energy use. The projected production of each crop or product in each target year is multiplied by a changing energy factor through time, 1985, 1990, etc., as shown first in Table IV-2. The results reflect only estimates for processing and handling.

TABLE IV-6

FOSSIL ENERGY USE PROJECTIONS FOR FOOD PROCESSING AND HANDLING BASED ON TRENDS IN PROCESSING TECHNOLOGY, 1973-1977

	1978 Processing/Handling Energy/Ton 10^6 Kcal	Processing Sector Code	1980 Correction Factor	1980 Production MT	1980 Energy Use 10^6 Kcal
Sugar Cane	.0642	7	0	11,332,906	1,619,333.6
Tobacco (Rama)	.1881	13	.0143	50,866	9,703.2
Cocoa (Grano)	.1193	8	.0371	40,695	5,035.8
Coffee (Cereza)	.7286	5	.0938	121,629	96,931.7
Rice	.0568	5	.0938	388,597	24,144.5
Beans	0	3	0	45,687	0
Corn	.0642	3	0	68,412	4,389.7
Plantain	0	9	0	295,413	0
Cassava (Yuca)	0	5	0	188,000	0
Banana	.0006	9	.0143	429,707	242.4
Sweet Potatoes	0	3	0	91,466	0
Potatoes	.0082	3	0	13,149	107.18
Tomatoes	.0358	3	0	131,464	4,710.9
Peanuts (Oil)	.8450	4	.04	65,697	57,733.1
Onions	.0406	3	0	10,416	422.6
Beef (Meat)	.2086	1	.0563	53,045	11,686.2
Milk	.2324	2	.0958	279,000	71,040.7
Poultry (Meat)	0	1	0	50,402	0
Pork	.7625	1	.0563	17,688	14,246.7

	1985 Correction Factor	1985 Production MT	1985 Energy Use 10^6 Kcal	1990 Correction Factor	1990 Production MT	1990 Energy Use 10^6 Kcal
Sugar Cane	0	12,261,746	1,752,053.5	0	13,190,585	1,884,773.2
Tobacco (Rama)	.0286	62,884	12,164.9	.0429	74,902	14,691.2
Cocoa (Grano)	.2725	50,459	7,375.3	.4080	60,222	10,117.3
Coffee (Cereza)	.1458	133,392	111,360.0	.1979	142,662	124,514.4
Rice	.1458	516,686	33,633.5	.1979	644,824	43,883.2
Beans	0	55,559	0	0	65,431	0
Corn	-.0278	79,091	4,933.8	-.0556	89,770	5,439.9
Plantain	0	377,816	0	0	460,318	0
Cassava (Yuca)	0	193,000	0	0	198,000	0
Banana	.0357	452,757	260.9	.0714	476,207	283.8
Sweet Potatoes	0	97,447	0	0	103,428	0
Potatoes	-.0278	13,000	103.0	-.0556	13,000	100.0
Tomatoes	-.0278	136,296	4,748.2	-.0556	141,128	4,776.0
Peanuts (Oil)	.08	82,172	7,942.7	.12	102,652	97,147.5
Onions	-.0278	10,925	430.5	-.0556	11,434	438.1
Beef (Meat)	.5759	11,145	20,097.0	.618	69,245	23,367.4
Milk	.4793	296,000	101,746.6	.8625	313,000	135,482.2
Poultry (Meat)	0	64,645	0	0	78,808	0
Pork	.5759	22,109	26,567.2	.618	26,530	32,731.3

TABLE IV-6 (Continued)

	1995			2000			
	Correction Factor	Production MT	Energy Use 10^6 Kcal	Correction Factor	Production MT	Energy Use 10^6 Kcal	% Change in Energy Use 1980-2000
Sugar Cane	0	14,119,425	2,017,493.0	0	15,048,265	2,150,213.6	32.2
Tobacco (Rama)	.0571	86,920	17,280.5	.0714	98,938	19,935.9	105.5
Cocoa (Grano)	.5927	69,986	13,300.0	.7775	79,749	16,913.8	235.9
Coffee (Cereza)	.2500	149,433	136,096.6	.3021	154,966	147,018.3	51.7
Rice	.2500	772,962	54,891.5	.3021	901,100	66,658.3	176.1
Beans	0	75,303	0	0	85,175	0	–
Corn	-.0833	106,448	6,261.4	-.1111	111,127	6.338.3	44.3
Plantain	0	542,770	0	0	625,273	0	–
Cassava (Yuca)	0	203,000	0	0	208,000	0	–
Banana	.1076	499,457	307.6	.1429	522,707	332.3	37.1
Sweet Potatoes	0	109,409	0	0	115,390	0	–
Potatoes	-.0833	13,000	97.1	-.1111	13,000	94.19	-13.0
Tomatoes	-.0833	145,960	4,794.6	-.1111	150,972	4,808.9	2.0
Peanuts (Oil)	.1683	128,315	125,171.3	.2000	160,394	162,635.5	281.7
Onions	-.0833	11,943	444.2	-.1111	12,453	449.1	6.3
Beef (Meat)	.8989	77,345	30,632.2	1.1820	85,445	38,885.2	232.7
Milk	1.2463	330,000	172,247.7	1.6299	547,000	334,314.0	370.6
Poultry (Meat)	0	93,130	0	0	107,773	0	–
Pork	.8959	30,952	44,816.6	1.1820	35,373	58,853.2	313.1

*Estimated possible values had there actually been any processing in 1978 base year.
Sources: 1978 Base storage, processing and marketing energy/MT from Tables III-5, III-1; target year production from Table IV-2; correction factors from Appendix F.

In the important sugar sector, it would appear that processing energy use technology has been surprisingly static since the oil crisis of 1974. The model projects an increase in output quantity of 32.8 percent and an energy increase of 33.2 percent. In beef, by contrast, there is a projected 60 percent increase in output and a 233 percent increase in energy. The meat processing as a whole (which includes pork) has been changing substantially during the 1974-80 period, and the direction of the change has been a decrease in the output efficiency of fossil energy. Energy use in milk processing increased ever faster during the 1973-77 period.

D. ENERGY USE PROJECTIONS BASED ON CHANGES IN LOCATION AND OTHER FACTORS THAT INFLUENCE PRODUCTION TECHNOLOGY

Changing the type of fuel conversion system in a 50 HP tractor does not change the basic management pattern of the farm where it is used. The farmer's cultivation of rice of corn can proceed exactly as before, yet if the new or altered end use device is more efficient in fuel conversion the energy input will be reduced. This is the type of change which we are referring to as a change in "energy technology," even though the cross-sectional data available for analysis in this study do not provide an adequate base or give any information on trends related to introduction of new or different end-use devices. The best that can be done under the circumstances is to test effects

of different techniques as they are embodied in "agricultural methods"–any of which may or may not include reliance on "special" end-use devices.

In Part III-D the fossil energy consumption aspects of various factors influencing farm management or technique were examined. For certain products there appear to be fossil fuel efficient technologies already in place that account for large shares of the production. And, as we have already seen, different methods are often linked to different geographic regions. Based on the well-known T. W. Schultz argument, we can make the assumption that current techniques are quite efficient for time and place. This suggests analysis of a policy involving actual physical shifts in location of production or agricultural method.

In this short section we illustrate some of the potential impacts on the DR farm level food production fossil energy bill if alternative location and other factors that seem to influence production methods are taken into account. The crops selected are rice, peanuts, beans and beef/milk. These examples will suggest a range of possibilities for other crops.

The method used in the test is to calculate the net energy "gains" from switching technologies one way or another. The result is applied to the percent of production to be switched in each of the target years. In practice no higher share of production can be shifted than is dictated by the availability of land, taking into account the interaction of quantity desired and yields Also, our overriding constraint would be that total nutrition availability would not be threatened unless export sales growth will finance off-setting food replacement.

The calculations represent the total energy savings and are subtracted from both the energy forecast to be going into the crop in question and the agriculture sector total. The percent savings this represents in individual total crop energy and that forecast to flow into all agricultural production is shown in Table IV-7.

1. Rice

We assume that about 25 percent of current production is shifted from the north to the adjacent regions east and west. Rice is an important crop, having a high income elasticity of demand (relative to other common food crops in the DR), so the opportunity to save energy in a big input use, while not putting pressure on consumer tastes and desires, is an attractive option. In this example, the assumption is that the necessary amounts of land in the "new" areas are available and that compensating use will be made of the land "freed-up" as production is moved. Results are shown in Table III-7 (based on data from Table III-18).

2. Peanuts

We assume that approximately 60 percent of current peanut production is placed totally in the hands of the operators of the smallest size farms. This is a general shift that occurs anywhere in the country, because no single region seems to be especially marked by energy savings technology in this crop. Land availability would not present a technical constraint. However, in practice, the cash earning potential of peanuts would have to be

TABLE IV-7

CALCULATIONS OF ENERGY SAVINGS BY SHIFTING CROP PRODUCTION LOCATIONS AND TECHNOLOGY

(Selected Crops in Five Target Years)

	Year	Shift Parameters Energy Req. 10^6 Kcal/MT Current	New Loc.	Net	% Prod. Shifted	Quantity Production Shifted	Kcal X 10^6 Energy Saved	X 10^6 New Req. Crop Energy	% Saving Crop Energy	10^6 Kcal New Total Farm Level Energy	% Savings Total Farm Level Energy
Rice	1980	.6824	.2840	-.3984	35.0	97,136.8	-38,699.3	165,132.5	19.0	642,070.0	6.0
	1985					129,171.5	-51,461.9	219,591.6	18.9	772,042.6	6.2
	1990					161,206.0	-64,224.5	274,050.2	19.0	894,272.8	6.7
	1995					193,240.5	-76,987.0	328,508.9	19.0	1,021,425.2	7.0
	2000					225,275.0	-89,749.6	382,967.5	19.0	1,150,247.1	7.2
Peanuts	1980	.17250	.0525	-.1200	79.0	51,900.6	-6,228.1	63,660.4	9.0	674,541.4	1.0
	1985					64,876.4	-7,785.2	79,576.2	9.0	815,719.3	1.0
	1990					81,095.0	-9,731.4	99,469.8	9.0	948,765.9	1.1
	1995					101,368.9	-12,164.3	124,337.2	9.0	1,086,247.9	1.1
	2000					126,711.3	-15,205.4	155,421.7	9.0	1,224,791.3	1.2
Beans	2980	.2614	.0123	-.2491	60.4	27,594.9	-6,873.9	3,529.0	66.1	673,895.6	1.1
	1985					33,557.6	-8,359.2	4,291.6	66.1	815,145.3	1.1
	1990					39,520.3	-9,844.5	5,053.8	66.1	948,652.8	1.1
	1995					45,483.0	-11,329.8	5,816.7	66.6	1,087,082.4	1.1
	2000					51,445.7	-12,815.1	5,656.1	69.4	1,227,181.6	1.0
Beef-Milk	1980	.260	.036	-.2240	12.1	40,174.8	-8,999.2	137,707.5	6.14	671,770.3	1.4
	1985					43,211.7	-9,679.4	152,663.5	6.0	813,825.1	1.2
	1990					46,248.6	-10,359.7	165,619.6	5.9	948,137.6	1.1
	1995					49,285.5	-11,040.0	178,575.6	5.9	1,087,372.2	1.0
	2000					52,322.4	-11,720.2	191,531.7	5.8	112,279.4	0.95

Sources: Appropriate crop tables in Section III-D. Possibilities for shift percentages inferred from interaction of various production factors in relation to location alternatives; i.e., an assumed movement from high to low "composite" technology. Shifts to more than one "new" location are contemplated. Beef-milk data from relevant portion of Section III-D.

great enough and secure enough to enable small operators to give up use of some land that may now be devoted strictly to family subsistence crops. Results are shown in Table IV-7 (based on data from Table III-26).

3. Beans

An important, common practice in bean production in Central America is to rely on planting in association with another crop. This is usually corn because the bean climbs the corn stalks, especially after the corn is harvested. In the DR, however, over 67 percent of all corn production is "solo," a practice that is nearly four times more energy demanding on a Kcal/ton basis (Table III-21). In this test we assume shifts into associated planting and some shifts among regions (Table III-20). All 17.4 percent of central region production is assumed to shift to the northwest and northeast regions. All of the production in the southeast and east is also assumed to shift to the same location. This total is roughly equivalent to the share of crops planted solo, although it should not be inferred that we believe there is anything like a full overlap between the two designations. All we assume is that the shifted and non-shifted bean production will adopt the associated system where possible.

The results are shown in Table IV-7.

Since the average Kcal/ton factor given up in the land switched out of beans is somewhat higher than the value shown for solo planting in Table III-20, whereas the values in the receiving region are lower (.0123 vs. .5771), we assume that the results of a test of switching to all associated planting would fall "inside" the results shown in Table IV-7. Therefore, no examples are necessary.

4. Meat-Milk

In 1978 approximately 330,000 tons of meat and milk were produced in the DR. Of this total, approximately 105,000 MT originated in the north and northeast regions (Figure IV-1). As already mentioned, these areas are significantly greater energy consumers on a per kilo basis of meat and milk produced.

In this test we assume that region 1 and 2 meat/milk production is lowered by 40,000 metric tons (1978) and that 10,000 are shifted into each of the four alternate areas: south, east/south, north-west and central-east. The Kcal/ton factors for the regions in question are 260 x 10^6 Kcal, for regions 1 and 2, .072 x 10^6 Kcal, for 3 and 4, and 0 for all others (p. 13, above). There is no technical limitation that would preclude such a shift. The composite energy factor for the receiving zones would be about .036 x 10^6 Kcal, and the share of national production is about 12 percent. If we assume the 12 percent is constant into the future, the results are as shown in Table IV-7.

5. *Summary of Technology Tests*

These simple tests of switching technology show that definite energy impacts can be achieved—at least from a technological standpoint. However, just how much can be achieved *relative* to other broad policy options is clearly limited. For example, for locational/technological switches to have a major impact on the total agricultural energy bill of the Dominican Republic, it is necessary to emphasize really important crops (as measured by tonnage, value, and cropped area) such as rice. In that particular case a 25 percent switch of output to available lower fossil fuel and chemical requirements would lead to meaningful, significantly lower energy consumption in crop and livestock production.

It is possible that simultaneous pursuit of technique changes among the less important crops (where actions are not mutually contradicting) could lead to savings on the agriculture sector energy bill of around 5 percent.

In order to really cut DR energy requirements by means of technical change at the farm level, it would be necessary to introduce appropriate and available information into the sugar cane subcomponent of all crop and livestock production. Such technology exists in other countries and probably can be found in the Dominican Republic too.

PART V

APPENDICES

A. Socio-Economic Profile

B. Public Sector Institutions

C. Methodology and Data Sources

D. Tabulations of Basic Input/Output Data for Major Dominican Republic Agricultural Products Studied

E. Miscellaneous Data and Conversion Factors

F. Data for Estimating Rates of Change in Energy Utilization in Food Processing Industries

G. Data for Projecting Domestic Human Demand for Selected Agricultural Products in the Dominican Republic

APPENDIX A

SOCIO-ECONOMIC PROFILE

A. INTRODUCTION

With close to 5 million inhabitants, the Dominican Republic is one of the largest of the Caribbean and Central American countries. Since 1966 it has been governed by a constitutional republic. During the decade from 1966-1976 the country made remarkable economic and social progress. The GNP grew at an annual rate of over 10% (one of the highest in the world) and per capita incomes more than doubled. During this period social programs were focused at the creation of massive employment through large public works projects oriented at improving the country's physical infrastructure. The investment was generated largely through increased public savings made possible by the rapid growth rate in the economy. Rural families were benefited by a wide variety of public investments in roads, schools, health, land distribution and water projects.

As that first decade came to a close, strong negative economic forces have already weakened the growth trends and foreshadowed a period of much slower economic progress. The major factors in this general weakening were the increase in petroleum prices, the decrease in sugar prices and two years of serious drought. The persistence of population growth rates of about 3% per year, high rural underutilization of labor which may be as high as 60%, a weakening growth rate in the economy, and the final blow of the 1979 hurricane, have all combined to place the economy in a much less favorable growth position than it enjoyed 10 years ago.

B. GENERAL DESCRIPTION OF THE DOMINICAN REPUBLIC

The Dominican Republic, with a land area of 48,734 square kilometers, is the second largest Caribbean country (about the size of Maryland and New Hampshire combined). It occupies the eastern two-thirds of the island of Hispaniola.

With an estimated population of 4.98 million in 1977,[1] the Dominican Republic (DR) is the fourth most populous country in Central America and the Caribbean.[2] The average annual population growth rate is relatively high at about 2.9 percent from 1970-76.[3] The rural-urban split is fairly even with about 46 percent[4] of the population living in urban areas mostly in and around the big cities of Santo Domingo in the central region and Santiago in the north. Between 1960 and 1975 the populations of these two cities grew at an average annual rate of

---

[1]International Monetary Fund, "International Financial Statistics" (English Edition), Vol. XXXII, No. 5, May, 1979.

[2]World Bank Atlas, 1978, p. 20.

[3]The World Bank estimate for the average annual population growth rate between 1970 and 1976 is 2.9 percent (see *World Bank Atlas*, 1978); and the IMF figure for the same period is also about 2.9 percent (calculated from "International Financial Statistics," Vol. XXX, No. 5, December, 1977, and Vol. XXXII, No. 5, May, 1979).

[4]World Bank, "World Economic and Social Indicators," Report No. 700/78/02, April, 1978, p. 42.

more than 6 percent.[5] The rate of population increase for other urban areas over the same period ranged from 3.8 percent in Mao to 7 percent in San Pedro de Marcoris.[6]

The Cordillera Central and three other parallel mountain ranges (Cordillera Septentrional, Sierra de Neiba, Sierra de Baoruco), all running in a northwesterly direction, dominate the highland topography[7] in the western part of the country, while the Cordillera Oriental, a narrow band of hills and somewhat less imposing, is the principal mountain system in the east. Running some 200 kilometers across the republic with its rugged slopes, convoluted ridges, and extensive pine forests, the Cordillera Central virtually divides the country into two parts. Its highest peak, Pico Duarte, is the tallest in the West Indies rising to some 3,175 meters above sea level. (See map on page 13.)

Like the highlands which define them, the country's lowlands (the Cibao Valley, the San Juan Valley and the Neiba Valley) stretch in a parallel northwesterly direction from origins close to the Caribbean to adjoining valleys in Haiti. The most famous of the lowland areas, the Cibao Valley, is the breadbasket of the country. Situated between the Cordillera Septentrional and the Cordillera Central, the Cibao covers some 5,180 square kilometers (about 10 percent of the national territory) from Samana Bay in the east to the Haitian border in the west. This is where population density is greatest. The Eastern Cibao Valley (known as the Vega Real or the Royal Plain), for example, especially the region between the cities of Santiago and San Pedro de Marcoris, is estimated to have densities exceeding 240 persons per square kilometer.

The San Juan Valley which is located between the Cordillera Central and the Sierra de Neiba covers an area of some 1,820 square kilometers. Most of the people in this region are engaged in cattle raising and in rice, bean, and coffee production.

The other parallel valley, the Neiba (known also as the Enriquillo Basin), lies north of the Sierra de Baoruco. This is a low-lying plain occupying some 1,950 square kilometers of semi-arid land mostly in the area known as the Cul de Sac of Haiti. Its most distinctive landmark is the large salt lake, Lago Enriquillo, which is 44 meters below sea level and is considered the lowest lake in the West Indies.

The other major lowland area, the Caribbean Coastal Plain, is located in the eastern part of the country near the foothills of the Cordillera Oriental. The primary activities in this region which covers more than 2,860 square kilometers are cattle raising and sugar production.

C. STRUCTURE OF THE ECONOMY

The International Monetary Fund (IMF) estimates the Dominican Republic's (DR) GNP at $4.34 billion and GNP per capita at $872 in 1977. In the same year GDP was estimated

---

[5]USAID Mission/Dominican Republic, *Statistical Data Book*, June, 1977, p. 76.

[6]The National Statistical Office (Dominican Republic) defines an urban area as one in which there are more than 20,000 inhabitants.

[7]For this brief description of the highlands/lowlands topography we drew heavily on Thomas Weil et al., "Area Handbook for the Dominican Republic" (1973), U.S. Government Printing Office, Washington, D.C.

at RD $4.46 billion at current prices[8] and RD $2.54 billion[9] at 1970 constant market prices. The sectoral composition of the GDP and the 1973-77 growth rates of the individual sectors are shown in Table I-1.

TABLE A-1

DOMINICAN REPUBLIC

PERCENTAGE DISTRIBUTION OF 1977[P] GDP AT CONSTANT 1970 PRICES AND SECTORAL GROWTH RATES

Sector	Percent (%)	Average Annual Growth Rate 1973-1977 (%)
Agriculture	11.3	0.7
Livestock	5.4	3.5
Forestry/Fishing	0.4	-4.2
Mining	5.6	9.2
Manufacturing	18.4	5.3
Construction	7.2	7.4
Commerce	16.7	5.7
Transport	7.3	7.0
Communications	1.0	12.4
Electricity	1.5	10.6
Money and Banking	2.3	15.2
Ownership of Dwellings	6.7	7.2
Government Services	7.4	4.5
Other Services	8.8	5.4
Gross Domestic Product	100.0	5.5
GDP per Capita	–	2.4

P = Preliminary figures.
Source: "Boletin Mensual," April, 1979, pp. 181-183.

[8]International Monetary Fund, "International Financial Statistics" (English Edition), Vol. XXXII, No. 5, May, 1979.

[9]Banco Central de la Republica Dominicana, "Boletin Mensual," Vol. XXXII, No. 4, April, 1979, p. 181.

D. *INDUSTRIAL PRODUCTION*

The manufacturing sector contributes the largest share of any sector in the GNP; in 1977 it contributed more than 18% compared with agriculture and livestock at 15%.

1. Industrial Structure

The industrial structure of the Dominican Republic is outlined in Table I-2.

TABLE A-2

DOMINICAN REPUBLIC

STRUCTURE OF INDUSTRIAL PRODUCTION IN 1977

Subsector	Percent of All Manufacturing Production	Number of Employees	Growth Index (1968 = 100)
Food & Drinks	59.7%	84,944	211
(Sugar Refining)	(15.8%)	(65,400)	191
Tobacco	4.6%	826	163
Textiles	2.0%	3,563	193
Clothing & Shoes	2.6%	4,622	336
Wood & Furniture Products	0.8%	1,213	284
Paper Products & Printing	3.7%	2,895	320
Chemicals	6.9%	3,550	294
Petroleum	8.0%	102	NA
Rubber, Plastics & Glass Products	2.7%	2,632	300
Non-Metallic Mineral Products	3.5%	3,977	284
Basic Metals	1.8%	1,027	200
Metal Products	2.4%	2,230	981
Machinery, Equipment & Other	1.4%	949	404

Source: Computation based on data from Oficina Nacional de Estadistica, Republica Dominicana en Cifras, 1980 Tables 321-03 and 321-04.

The predominance of food products in the DR industrial sector illustrates the general economic dependency on the primary agricultural sector. The employment share is much higher—three out of every four industrial workers are employed in a food products plant, and three out of every four of these food product workers are employed in a sugar processing plant. The food products sector will be examined in more detail in Part II below.

Chemicals and petroleum plants constitute the next largest industries. Their capital intensity can be illustrated by the fact that while they constitute 15% of the value of industrial production, they employ only 3% of industrial workers.

2. *Industrial Growth Trends*

While the growth indices indicated in Table I-2 are generally high (most industries more than doubled production in the period 1968-77), most of this growth took place in the first half of that decade, and growth rates have slowed considerably since 1974.

The manufacturing sector grew at an average annual rate of 5.3 percent from 1973 to 1977; this compares favorably with the growth rates of the agriculture, forestry/fishing, and livestock sectors, but less so with the mining, construction, electric, and transportation sectors.[10] The 1977 production estimates for the chemical industry indicate that of the industry's five main products only two fell below their 1976 output figures. Furfural declined from 34,226 tons in 1976 to 30,249 tons in 1977, and output of paints dropped from 6,806 liters to 5,904 liters; on the other hand, chemical fertilizers increased from 176,539 tons to 183,057 tons, urethane foam from 11.60 x 10^6 ft^2 to 13.24 x 10^6 ft^2, and soap from 25,841 tons to 28,378 tons.[11] The two-plant cement industry produced some 862,126 tons of cement in 1977, representing an increase of almost 32 percent from 1976,[12] and the value of textiles produced increased from RD $27.9 million to RD $29.5 million (1970 prices) during the same period.[13] Table I-3 shows output of selected manufactured products from 1973 to 1977.

E. *MINERAL PRODUCTION*

Of the wide variety of mineral resources in the DR, nickel is by far the most important; exported as ferronickel since 1974, only sugar, coffee, and cocoa surpassed it as earner of foreign exchange in 1977. Prior to 1972 when the RD $200 million Falconbridge nickel project[14] was initiated, about 80 percent of all mining activities were confined to the extraction of bauxite and about 20 percent to limestone, gypsum, salt, and building stones. Since the completion of the extracting and processing facility near the town of Banao, however, nickel has replaced bauxite as the primary mining industry. Table I-4 shows production of some selected minerals from 1973 to 1977.

---

[10]The average annual growth rates for these sectors during 1973-77 were as follows: agriculture (0.7%), livestock (3.5%), forestry/fishing (- 4.2%), electricity (10.6%), mining (9.2%), construction (7.4%), and transportation (7%).

[11]"Republica Dominicana en Cifras, 1978," p. 50.

[12]*Ibid.*, p. 51.

[13]"Boletin Mensual," April, 1979, p. 194.

[14]The Falconbridge Dominicana Company, which is jointly owned by the government and two foreign firms (Canadian, U.S.), was responsible for the RD $200 million initial financing. To date, this has been the largest single investment project in the DR's history.

TABLE A-3

DOMINICAN REPUBLIC

PRODUCTION OF SELECTED MANUFACTURED PRODUCTS, 1973-1977

Year	Furfural (Tons)	Paint (Liters)	Fertilizer (Tons)	Urethane Foam (ft^2)	Soap (Tons)	Cement (Tons)
1973	26,970	4,964	184,084	4,632	22,810	581,925
1974	24,021	4,640	164,365	5,445	21,848	642,518
1975	35,660	5,165	143,929	6,666	22,862	554,931
1976	34,226	6,806	176,539	11,604	25,841	653,877
1977[P]	30,249	5,904	183,057	13,246	28,378	862,126

P = Preliminary figures.
Source: "Republica Dominicana en Cifras, 1978," Vol. III, pp. 50-51.

TABLE A-4

DOMINICAN REPUBLIC

MINERAL PRODUCTION, 1973-1977

Mineral	1973	1974	1975	1976	1977[P]
Bauxite (Tons)	1,085,645	1,195,607	785,094	621,247	574,966
Ferronickel (Tons)	28,298	30,942	26,922	24,399	24,899
Gold (Tons)	–	–	6	13	11
Silver (Tons)	–	–	3	28	42
Gypsum (Tons)	266,641	383,892	193,553	207,562	221,572
Sand (m^3)	70,930	94,040	136,548	211,856	200,984
Gravel (m^3)	31,740	37,260	53,824	104,219	151,127
Limestone (Tons)	105,970	280,247	252,097	247,642	285,523
Salt (Tons)	39,129	39,830	37,424	35,431	48,592

P = Preliminary figures.
Source: "Republica Dominicana en Cifras, 1978," Vol. III, p. 47.

F. FOREIGN TRADE

1. General Export, Import and Trade Balance Trends

Among Caribbean countries, the Dominican Republic is one of the most active in international trade. In 1977, about 66 percent of all its exports (market value) went to the United States, 7 percent to both Portugal and Puerto Rico, 2 percent to both Spain and Morocco, 1.6 percent to both Venezuela and Belgium-Luxembourg, and anywhere from .2 to 5 percent each to Italy, Haiti, and Japan.[15] With the exception of Morocco, all these countries, especially the United States, Venezuela, and Puerto Rico, provided the bulk of the DR's imports for that same year.[16] In 1975, the DR ranked first as supplier to the United States for sugar, fourth for cocoa, and fifth for bauxite.[17] Sugar accounted for 28 percent of the value of exports in 1977 (down 7.5 percent from the previous year), followed by coffee with 20.4 percent (down 8 percent from 1976), cocoa with 12 percent (down almost 6 percent), ferronickel with 11.6 percent (a decline of about 3 percent), and gold and silver alloys with 7 percent (up .6 percent during the same period).[18] The balance of payments figures, however, provide a better view of the performance of the economy as a whole. Table I-5 provides an outline of recent balance of trade.

TABLE A-5

DOMINICAN REPUBLIC

IMPORTS, EXPORTS, AND TRADE BALANCE

(RDS 000,000)

Period	Exports (FOB)	Imports (FOB)	Balance
1974	636.8	673.0	-36.2
1975	893.8	772.7	121.1
1976	716.4	763.6	-47.2
1977	780.5	847.8	-67.3
1978	675.5	859.7	-184.2

[15]"Boletin Mensual," April, 1979, *op. cit.*, pp. 117-118.

[16]*Ibid.*, pp. 120-121.

[17]United Nations, "Yearbook of International Trade Statistics, 1976," Volume II.

[18]"Boletin Mensual," April, 1979, *op. cit.*, p. 115.

For five of the eight years between 1969 and 1977 the DR ran a trade deficit. After the trade deficit had increased from RD $64 million in 1970 to RD $69 million in 1971, the following two years (1972 and 1973) saw surpluses of RD $9.98 million and RD $20.26 million, respectively; by 1974, the country again experienced a negative trade balance (RD $36.19 million) but recovered in 1975 with a surplus of RD $121.16 million. Since then the country has been running a deficit each year, reaching some RD $66.98 million in 1977 and RD $184.2 million in 1978.[19] The overall balance of payments was in surplus from 1970 to 1975;[20] since then, it has been in deficit as shown in Table I-5.

The primary reason for these substantial deficits in the balance of trade since 1975 has been the collapse of the world market price for sugar, the country's main export, together with the increased cost of petroleum. For example, the world market (FOB Caribbean ports) price of sugar dropped from U.S. $0.132 per pound in December 1975 to U.S. $0.0709 per pound in October 1977,[21] while the Saudi Arabian (FOB Ras Tanura) posted price for crude petroleum jumped from U.S. $11.53 per barrel in 1975 to U.S. $13.00 per barrel in June of 1977;[22] so that, whereas the DR's sugar sales in 1975 brought in about RD $522 million and its oil purchases cost about RD $169 million that same year, in 1977, sugar sales brought RD $218 million and oil purchases cost RD $189 million.[23] The 1979 figures are even more revealing—"sugar sales brought $225 million and oil purchases cost $325 million"—according to the DR's Minister of Finance, Bolivar Baez Ortiz.[24] As of March 1979, international reserves stood at U.S. $128.2 million,[25] which was equivalent to about one and three quarter months imports if the January import bill is used as a guide.[26]

2. *Principal Export Products*

Table I-6 outlines the principal DR export products. Of all Dominican products, sugar is and has been the most important, not only in terms of its contribution to employment and to GDP[27] but also in terms of export income. It led all other commodities in volume of

---

[19]For 1970-77 figures, see "Balance of Payments Yearbook," Vol. 29, December, 1978, IMF; for preliminary 1978 data, see "Boletin Mensual," April, 1979, *op. cit.*, p. 127.

[20]"Balance of Payments Yearbook," Vol. 29, *op. cit.*

[21]"Boletin Mensual," April, 1979, p. 167.

[22]World Bank, "Commodity Trade and Price Trends" (1977 Edition), Report No. EC-166/77, August, 1977, p. 92.

[23]Figures for 1975 and 1977 sugar sales are from "Boletin Mensual," April, 1979; and figures for 1975 and 1977 oil purchases are from Thomas V. Long et al., "The Rational Use of Energy in the Dominican Republic," A Report to the Inter-American Development Bank, Exhibit I-1, note.

[24]Jo Thomas, "After a Year, Dominican Democracy Still Feeling its Way," *The New York Times*, Saturday, August 25, 1979, p. 2.

[25]"International Financial Statistics," May, 1979, *op. cit.*, p. 125.

[26]In January, 1979 the import bill was RD $72.1 million; see "Boletin Mensual," April, 1979, *op. cit.*, p. 103.

[27]In 1975, for example, the sugar companies reported more than 81,000 workers (about 7 percent of the labor force) employed in sugar cane production and refining; see "Estadistica Industrial de la Republica Dominicana, 1975," Oficina Nacional de Estadistica, Boletin No. 23, p. 89, and in 1976, sugar's contribution (in current prices) to GDP was 14 percent; see "Dominican Republic: Its Main Economic Development Problems," World Bank (December, 1978), p. 403.

exports in 1977 and was by far the top earner of foreign exchange in that same year. More than 1.1 million tons of sugar valued at $218.3 million[28] were exported representing an average annual growth rate of 11.1 percent from 1970. Over the same period, which saw very high world market prices in 1974-75 and extremely low ones in 1976 and 1977, the volume of exports grew at an average annual rate of 5.3 percent.

TABLE A-6

DOMINICAN REPUBLIC

EXPORT VALUE OF SELECTED COMMODITIES, 1974-1977

(MILLIONS OF $)

Commodities	1974	1975	1976	1977
Sugar	324.12	552.13	247.09	218.32
Coffee	39.29	34.70	83.30	169.54
Cocoa	44.23	24.77	44.37	93.06
Tobacco	39.00	34.40	38.26	27.12
Ferronickel	93.09	102.14	110.33	91.92
Bauxite	17.75	16.72	15.52	21.98

Source: Data (market value) for 1974 from "Boletin Mensual," Volume XXXII, No. 4, April, 1979, pp. 109-112; data (FOB value) for 1975-1977 from "Estadistica Dominicana, 1978" (Seccion 331 Comercio), pp. 17-19.

Since its introduction into the DR in the early part of the eighteenth century, coffee has become one of the more important crops. Of the 120,416 tons[29] produced in 1977, mostly on small farms in Barahona, the Cibao Valley and the Ocoa River region, more than 79,000 tons valued at $169.5 million were exported which is more than twice the 1976 export volume and almost a three-fold increase since 1970.[30]

Although the volume of cocoa exports increased by only 4 percent from 1976 to 1977, the value of exports increased more than 209 percent during the same period. Export volume amounted to 24,612 tons in 1976 and only 25,615 in 1977, while the value of exports jumped

[28] Oficina Nacional de Estadistica, "Estadistica Dominicana, 1978" (Seccion 331 Comercio), Vol. XXXVI, p. 17; all export figures are quoted at FOB value unless stated otherwise.

[29] Secretariado Tecnico de la Presidencia (Oficina Nacional de Estadistica), "Republica Dominican en Cifras, 1978," Vol. VIII, p. 43.

[30] "Estadistica Dominicana, 1978" (Seccion 331 Comercio), *op. cit.*, p. 18.

from RD $43.37 million to RD $93.06 million.[31] This no doubt was a reflection of the dramatic increase in cocoa prices; for example, the price of cocoa went from U.S. $65.75 (FOB) per 100 pounds on the New York market in January 1976 to U.S. $209.3 in July 1977.[32] The DR is not a signatory to the International Cocoa Agreement of 1975, although it is one of the major producing countries;[33] and as such is not restricted by price and quota regulations under the agreement.

Of all the main export crops, tobacco has been the one most seriously affected by fluctuations in foreign demand. In addition, the outmoded techniques used in its production and the marked inequalities surrounding the distribution of its profits have, at least in some sections of the country, contributed greatly to the steady decline of the crop.[34] In 1960, 15,193 tons of tobacco valued at $6.73 million were exported. By the end of the next decade export volume had reached only 19,535 tons. Although export volume increased sharply in 1975 (37,137 tons) and 1976 (32,798 tons), most of the 1970's saw relatively low levels of exports. In 1977, for example, only 18,686 tons reached foreign markets, mostly Spain (62 percent), the United States (9 percent), Belgium-Luxembourg (6 percent), and Holland (5 percent).[35] Table I-7 shows the main export commodities for 1974-77, their value, volume, and country of destination.

Because the DR is a deficit-producer of basic foodstuffs it needs, the authorities must import in order to meet internal demand.[36] The Price Stabilization Institute of Instituto de Establizacion de Precios (INESPRE) is responsible for most of the government's import activities, and as of March 1976, supported the prices of eight crops—rice, red and black beans, corn, sorghum, coconut, copra, garlic, and onion. The reduction of imports via domestically produced substitutes is therefore an understandable policy goal of the government[37] and a clear indication of the importance of those crops that are produced primarily for local consumption.[38]

---

[31]"Estadistica Dominicana, 1978" (Seccion 331 Comercio), *op. cit.*, p. 18.

[32]Banco Central de la Republica Dominicana, "Boletin Mensual," Vol. XXXII, No. 4, April, 1979, p. 18.

[33]K. R. Khan, "International Cocoa Agreement, 1975," *Food Policy*, Vol. 4, No. 1, February, 1979, p. 15, footnote 1.

[34]Gustavo A. Antonini, "Peasant Agriculture in Northwestern Dominican Republic," *Journal of Tropical Geography*, Vol. 32, 1971.

[35]"Estadistica Dominicana, 1978," *op. cit.*, p. 19.

[36]Arthur J. Mann, "Price Stabilization Policy in a Developing Economy: The Case of the Dominican Republic," *Social and Economic Studies*, Vol. 26, No. 2, pp. 192-193, 1977.

[37]Glenn C. W. Ames and Jackie W. Hartley, "Sources of Agricultural Credit and Development in the Dominican Republic," College of Agriculture, University of Georgia, 1977, p. 1.

[38]The number of ways in which food crops are consumed locally include: home consumption, as sales in the marketplace, as seeds, as payment in kind, and to a small extent, animal consumption.

TABLE A-7

DOMINICAN REPUBLIC

EXPORT VOLUME OF SELECTED COMMODITIES AND COUNTRIES OF DESTINATION

Commodity and Country	1974[c] Volume (Metric Tons)	%	1975 Volume (Metric Tons)	%	1976 Volume (Metric Tons)	%	1977 Volume (Metric Tons)	%
Sugar[a]	1,015,744	100.0	938,785	100.0	963,270	100.0	1,101,040	100.0
United States	718,281	70.7	684,648	72.9	895,083	92.9	881,331	80.0
Italy	–	–	54,975	5.8	–	–	–	–
Romania	–	–	31,992	2.4	8,205	0.8	–	–
Kenya	–	–	–	–	14,980	1.5	–	–
Morocco	–	–	29,965	3.1	–	–	63,236	5.7
Coffee[a]	31,137	100.0	25,642	100.0	35,248	100.0	79,751	100.0
United States	25,563	82.0	21,980	85.7	31,851	90.3	76,281	95.6
	1,148	3.6	1,337	5.2	796	2.2	458	0.5
	–	–	–	–	967	2.7	2,113	2.6
Cocoa[a]	26,560	100.0	21,668	100.0	24,612	100.0	25,615	100.0
United States	26,126	98.3	21,507	99.2	24,612	100.0	25,201	98.3
Ferronickel[a]	79,839	100.0	63,066	100.0	68,139	100.0	59,947	100.0
Holland	36,907	46.2	36,585	58.0	28,847	42.3	27,084	45.1
United States	38,236	47.8	17,062	27.0	26,050	38.2	27,453	45.7
Canada	–		4,524	7.1	11,346	16.6	--	–
Bauxite (metric tons)[b]	1,473,588	100.0	909,906	100.0	627,152	100.0	774,098	100.0
United States	1,473,588	100.0	909,906	100.0	627,152	100.0	774,098	100.0
Tobacco[a]	42,326	100.0	37,137	100.0	32,798	100.0	18,686	100.0
Spain	22,398	52.9	15,855	42.6	19,421	59.2	11,731	62.7
United States	4,347	10.2	4,315	11.6	3,351	10.2	1,689	9.0

[a]Data from "Estadistica Dominicana, 1978" (Seccion 331 Comercio), pp. 17-19.
[b]Data from "Boletin Mensual," April, 1979, p. 115.
[c]Data (1974) from "Boletin Mensual," August, 1978, p. 113.

APPENDIX B

PUBLIC SECTOR INSTITUTIONS

A. *KEY INSTITUTIONS AND ACTIVITIES GERMANE TO ENERGY IMPROVEMENT ACTIVITIES FOR THE FOOD SYSTEM*

1. *The National Commission for Energy Policy (CNPE)*

The Energy Commission is a new organization created to coordinate policy regarding the supply and delivery of energy and to get all sectors to make efficient use of the energy available. Its strategy includes both (1) energy saving and conservation, and (2) development and exploitation of natural energy resources. In 1980 the Commission expects to get a regular budget of 1.2 million pesos plus funds from AID for Energy Conservation and Resource Development ($5 million for FY81-82) and Energy Policy Development ($634,000 for FY80-82). Staff is expected to increase from 5 in 1979 to 30 in June, 1980 (18 technicians and 12 support). CNPE plans to move out of INDOTEC to its own quarters in April, 1980. Other agencies look for guidance from CNPE regarding the deviations they should make from their normal practices to improve the energy situation.

The activities of CNPE germane to the food/agriculture sector include the following:

a. committees for interinstitutional coordination regarding development of hydroelectric power, improved use of bagasse, and production of burnable alcohol from sugar cane.
b. evaluation of the concept of tree-farming for fueling a substantial electricity generator; pilot project if justified.
c. studying and developing technology for solar drying of bagasse, use of agricultural wastes, and other uses for solar energy.
d. coordination of and support for any programs that promise significant contributions to the energy situation.

2. *The Secretariat of State for Agriculture (SEA)*

Most of the public sector agencies involved in agriculture are being restructured into a greatly expanded Secretariat of Agriculture. The legislation provided for sub-secretariats of agricultural planning, administration, natural resources and environmental protection, agrarian reform, agricultural production, and rural development. Seven regional directors would administer programs. Decentralized organizations would include INCOAGRO (Institute for Agricultural Commercialization--formerly INESPRE), the Agricultural Development Bank, INDRHI (water resources), IAD (Agrarian Reform settlements), IDECOOP (Cooperatives), and ODC (Community Development). The legislation for reorganization has been resubmitted to the Congress (March, 1980) to preserve the semi-autonomous status of the Dominican Agrarian Institute (IAD), Forestry, INDA (cotton), and National Parks.

The policies and programs of SEA germane to energy include the following:

a. Production of appropriate technology devices for using renewable energy (e.g., windmills, water pumps, etc.) near La Vega.
b. SEA views agriculture as a supplier of energy to the economy rather than a place to conserve energy (beyond SEA's own vehicles). Their orientation is toward in-increasing production and income, in situations where generally the cost of energy creates opportunities for biomass production on land that cannot be used for food production and where prices of other crops may be unattractive. The possibilities of producing alcohol as a substitute for imported petroleum is being studied.
c. Firewood production and exploitation is very important to the rural economy (80% rural domestic energy use in 1978 and 11% of all energy use in 1978); however, forest products are outside SEA, under the control of the Dominican military, and are likely to remain outside SEA after the reorganization.
d. SEA operates stores selling inputs of fertilizer, pesticides, small equipment, etc., in rural areas all over the country. The CENSERI program is establishing a network of integrated service centers that could become an effective distribution system for improved energy devices in rural areas. Seventeen CENSERIs were established in 1979, 50 are planned for 1980, and more later with regional centers to follow.
e. The crisis atmosphere that surrounds the costly dependence on imported petroleum leads to a focus on the oil replacement activities. However, there is also reason for concern about erosion of soils, deforestation, desertification, and other long-range phenomena affecting agriculture.
f. Hurricane damage in 1979 was estimated at 300 million pesos (farm level prices) or 450 million pesos (using retail prices). Rehabilitation of the damaged areas diverts money and energy from long run development projects.

3. National Institute of Hydraulic Resources (INDRHI)

INDHRI has broad legal responsibilities for development of hydraulic resources including irrigation works and hydroelectric power. Law 6 from 1965 includes among INDRHI's functions: planning, construction, and management of national waters with the cooperation of CDE regarding energy generation. INDRHI has focused overwhelmingly on irrigation needs until recently when the need for hydroelectric power was given higher priority. The Tavera/Bao dams have contributed very little electricity (and particularly little for peakload periods) due to design and operations procedures oriented to providing a uniform flow of water for irrigation. INDRHI is widely regarded as a weak institution, hard-pressed already in carrying out past projects and participating in development of hydroelectric power as quickly as possible. The international lending agencies have insisted that CDE operate hydroelectric projects; legislation regarding the allocation of responsibilities is under consideration. CNPE has created a committee to coordinate the hydroelectric power efforts of INDRHI, CDE, and others. ONAPLAN anticipates INDRHI hydroelectric projects costing RD $473.7 million, of which RD $37.5 million are expected to be invested in 1980-82.

The activities of INDRHI germane to the food/agriculture sector include the following:

a. Continued development of irrigation works and complementary activities in the Yaque del Norte area (from the Tavera/Bao complex), the Valdesia dam area, the Sabaneta dam area, and a series of canals for regulation and distribution.
b. Planning and design for hydroelectric development at major sites including Yaque del Norte expansions, Higuey/Aguacate, Alto Yuna, and Yaque del Sur.
c. Identification and planning of mini-hydroelectric projects. The national priority given to substitution of hydroelectric energy for imported petroleum is basically a fuel substitution program to support an electric system that is overwhelmingly oriented to Santo Domingo and the urban economy. The food/agriculture sector may suffer from diversion of resources away from irrigation and development of agricultural land in order to meet urban energy needs.

4. Dominican Electricity Corporation (CDE)

CDE supplies electricity to Santo Domingo, the secondary cities of the Dominican Republic, and to smaller communities through 2090 km of transmission lines and approximately 3,000 km of distribution lines. In 1979, before the hurricanes, CDE had installed generating capacity of 546 megawatts net with only 401 megawatts normally available. This included four hydroelectric generators with installed capacity of 137 Mw, but contributing only 52 Mw to peak load capacity because of the low level of water storage and the competing demands on water for irrigation. CDE also faced serious problems from poor maintenance, overloading, frequent interruption of service, losses up to 25% in transmission and distribution, delays in payments, irregular use of service, and inefficient procedures for billing and collections. Production increased rapidly in the 1970s, from 1,001 million Kwh in 1971 to 2,059 million Kwh in 1977. Bosts rose rapidly. CDE has been unprofitable since 1976. The expansion plan of 1973 was not carried out as planned in 1975-79 with delays that cost millions of pesos, intensive use of existing units, neglected maintenance, defaulting on debts, and borrowing extensively to pay current expenses. There have been recent rate increases of 2¢ per Kwh in all but residential areas (1980). The international lending agencies are encouraging GODR to allow rates that will make CDE economically viable.

The electric system was seriously damaged during Hurricane David in August 1979 and Storm Frederick in September 1979, especially in the provinces of Peravia, San Cristobal and the National District. The damage to generating plants in Haina (222 Mw capacity before the storm), Santo Domingo (77 Mw) and elsewhere reduced installed capacity to two-thirds of the previous level. The damage forced large investments to restore electric service to the affected areas, diverting resources and energy away from the other problems of CDE.

A master plan for expansion of the CDE electric system from 1979-1992 has been prepared by CDE with assistance from the French firm, SOFRELEC; the plan has been circulated in draft and is being revised (in March, 1980). Based on the draft, the objective will be to remedy existing deficiencies in three and one-half years and then provide service good enough to not constrain development. Plans for generation included an 84.5 Mw thermal unit in Haina, and a 125 Mw unit plus hydroelectric power adding 37 Mw to peak load capacity.

Transmission and distribution will be extended substantially with attention to cutting the high losses in the existing system (perhaps with Japanese involvement). Institutional and administrative reforms are planned to improve internal efficiency. The economic situation will be improved through refinancing of costly loans, a more realistic rate structure, and investments to improve internal efficiency. However, CDE's continued dependence on imported oil makes it vulnerable to inflation in the cost of oil. The completed expansion plan will be ready in June, 1980, including an analysis of the market for electricity and the feasibility of hydroelectric development at various sites in the Valley of the Yaque del Norte. Total electrical consumption was projected in the draft to increase to 7,614 Gwh in 1992 from 1,666 Gwh in 1979. These projects take into consideration assumptions regarding substitutions for fossil fuels, one of nonconventional energy sources, mechanization of agriculture installations, energy for irrigation and tourism complexes. The draft plan took the hurricane damage into account by estimating a lag of one to two years in the previously projected demand; i.e., between a high of 9,204 Gwh and a low of 7,024 Gwh in 1993 (p. 107).

CDE has been involved in related energy-relevant activities such as reforestation for watershed management to minimize silting of hydroelectric dams, investment in La Mercedes Oil Company for a 50 percent participation in domestic oil development, and coal exploration. The ONAPLAN program of public investments for 1980-1982 identifies CDE projects costing RD $850 including RD $277 million in the 1980-1982 period (p. 81).

The activities of CDE that are germane to energy in the food/agriculture sector include the following:

a. A rural electrification program costing RD $34.6 million to be financed by the IADB beginning in 1981. The manager for the project is receptive to going beyond traditional rural electrification approaches of extending the central grid to communities close enough to be served most economically; see section B, p.
b. Improved efficiency in the use of bagasse on the sugar estates should lead to net sales of electricity to CDE instead of net purchases.
c. Rehabilitation of electric service to the areas disrupted by the 1979 storms will require approximately RD $10.5 million, mostly in the south-central region.

5. *National Planning Office in the Technical Secretariat of the Presidency (ONAPLAN)*

ONAPLAN is the planning arm of the Presidency. It views its responsibility as collecting plans, screening, and setting some priorities. ONAPLAN does not prepare projects. In 1976 ONAPLAN published an analysis of the *Possibilities of the Energy Sector* (PLANDES 28); the demand for energy in agriculture was not even included as a category in the analysis at the time. PLANDES 26 in 1976 was a 602 page development plan that devoted great attention to agriculture and very little to energy. In 1980, ONAPLAN has published a *Three Year Plan of Public Investments for 1980-1982;* the private sector is completely omitted and the plan makes no pretense of being a comprehensive national development plan. ONAPLAN is sensitive to macroeconomic relationships and to policy decisions that must be made by the President.

ONAPLAN policies and activities that are germane to energy in the food/agriculture sector include the following:

a. ONAPLAN's analysis indicates that GODR must give high priority to policies and investments that will relieve the dependence on imported oil and the incipient balance of payments problems from paying for imported oil. Dependence on imported oil is a serious problem that affects management of the economy as a whole, including agriculture. The cost of imported oil in 1980 is expected to reach RD $6.4 billion. The situation is getting worse despite import restrictions, restrictive monetary policy, budget controls and other fiscal measures. The restrictions cut employment and economic growth. ONAPLAN sees a difficult balancing act; restrictive policies for controlling inflation carry the risk of serious recession, but on the other side, policies conducive to expansion and growth risk serious inflation and balance of payments problems.

   The mere financing of the oil imports is a serious problem. Debt burden has doubled in four years; interest alone is US $130 million annually. Official lending will be harder to get in the future, forcing the use of more costly private borrowing. Prices of sugar have been low, although a recent upturn in sugar prices may provide some surplus funds for investment. Consequences include higher priority to export-oriented activities (which could benefit agriculture), emphasis on hydroelectric power and any other activities to reduce dependence on oil, including conservation, changing working hours, etc. The price of gasoline has been raised to RD $1.85 per gallon in Santo Domingo (and up to RD $1.87 in other zones). Electricity rates were raised 2¢/kwh for nonresidential users, and further increases are under consideration (with encouragement from the World Bank).

b. Rural areas will get little benefit from most of these investments, since electricity and petroleum demand are overwhelmingly in the urban areas, plus transportation, industry and residential uses. Transportation of agricultural products has been protected somewhat since prices are still deliberately subsidized on diesel fuel used by trucks and passenger buses.

   Investments for development of rural areas must compete in stiff competition for scarce government funds and for foreign loans that are increasingly expensive. ONAPLAN fears that the investments required may exceed the funds available domestically and from abroad. The total for all agriculture projects for 1980-1982 is RD $1,039 million or 24% of the total planned investments.

c. ONAPLAN looks to CNPE for leadership regarding energy. Approximately 30 percent of all public sector investments in the three-year plan are for CDE and INDRHI energy projects; i.e., RD $1,323 million out of RD $4,313 million.

d. Many projects are identified, but few are prepared. Getting them prepared *and* getting a decision to go ahead may delay projects for years.

6. *International Financing Institutions—the World Bank, Interamerican Development Bank, and the US Agency for International Development*

The international development financing institutions recognize the urgency of projects and activities to improve the energy situation in the Dominican Republic. The magnitude of the problem is large, especially the dependence on costly imported petroleum; present practices offer many opportunities to improve energy efficiency, and many energy improvement projects will require large investments.

The World Bank anticipates no new starts in irrigation projects or multipurpose irrigation/hydroelectric projects like the Yaque del Norte complex. The World Bank is receptive to financing hydroelectric projects including regulatory dams and canals to increase power production from existing dams. Likely targets are Bao/Tavera/Lopez complex, the Alto Bao complex, the Alto Yaque complex, and the smaller Rio Blanco project.

The Interamerican Development Bank is receptive to financing hydroelectric projects and also non-conventional energy projects. The Tavera dam has produced disappointing results, especially for power. IADB expects important improvements from Bao and Lopez/Angostura projects. If the Japanese help modernize the distribution system in Santo Domingo, IADB will help on other electricity transmission and distribution systems, including rural electrification.

IADB is also interested in non-conventional energy projects starting with "use of solar energy" and "energy conservation." The solar energy project finances work with INDOTEC to increase use of solar energy in rural areas: improving INDOTEC technical capabilities, training, and field testing selected applications. A solar pond prefeasibility study is anticipated, considering a 5000 Kw project at Lago Enriquillo. The energy conservation project was still being developed in March, 1980.

USAID supports energy improvement activities through support for the Energy Commission, a national energy assessment, a regional (Caribbean region) project for non-conventional energy, an appropriate technology component in the agriculture loan, and the centrally funded study of energy needs in the food system. USAID has supported institutional development, especially at the Energy Commission, through the "Energy Policy Development" project with US $634,000 in FY80-82. A project for "Energy Conservation and Resources Development" is anticipated for FY1981-82. US $5 million will be used to reduce the dependence of the Dominican Republic on imported fuels and increase the availability of low cost energy supplies through conservation programs and development of local energy sources.

The comments and activities of the international agencies germane to the energy for the food/agriculture sector include the following:

a. Funds for prefeasibility studies and technical assistance are available through the IADB which are not used despite the shortage of fundable projects. The financing agencies do not expect loans to be the binding constraint on energy-improvement activities. They emphasize the need for well prepared, sound projects ready to be financed and lack of capable personnel to do the preparatory work.
b. Projects for the agricultural sector may be more difficult to develop due to weaker institutional structure and planning at all levels. For example, firewood is important, but it is not clear how a major project would be managed at national or regional level.

c. For rural areas, the problem is how to provide the energy required to support higher levels of activity; focusing on efficiency and conservation may overlook important opportunities.
d. Implementation of projects has been less of a problem once they are adequately studied and approved.

7. *Dominican Financing Institutions–FIDE, Dominican Development Fund, Central Bank*

There should be financing available for many energy-improvement activities in the food/agriculture sector. The Central Bank has a global loan for industry which can be used to finance improvements in energy efficiency in the industrial sector. There is also a global agricultural loan. Presumably the Banco Agricola could extend loans for major projects.

FIDE (the Fund for Investments in Economic Development) is a credit facility at the Central Bank that will lend for energy saving or conservation, modifications of productive processes to improve energy efficiency, etc., for agroindustry, livestock, and agriculture. Loans can go to groups of small producers, cooperatives, and to the growing number of associations of farmers. Interest rates to the borrowers cannot exceed 9 percent per year. However, the availability of credit has not elicited loan applications in a full year for energy-improvement activities.

Loans to finance improved stoves or other energy using devices in rural households may be critical to their acceptance; according to a study by ISA, the cost of efficient devices were beyond the means of poor Dominicans to make the conversion. It may be necessary to develop further innovations in financing, such as financing through distributors who extend credit to individual households. FIDE appears flexible and willing to test innovative approaches. The Dominican Development Foundation is another potential source of financing for improved energy devices in rural areas.

8. *Dominican Institute for Industrial Technology (INDOTEC)*

INDOTEC was established by the Central Bank, with technical and administrative independence, to provide the necessary technological assistance for development of industry and maximum use of the productive resources of the Dominican Republic. INDOTEC's technical services division has well equipped laboratories, especially for quality control and for establishing standards. At the end of 1979 INDOTEC had 130 permanent staff plus 23 for a special fisheries project; education levels were high, including 8 doctorates. The documentation center provides scientific and technological information from abroad. The Department of Research and Development includes several units doing relevant work: the energy resources unit supported this PCI analysis and the work of the Energy Commission (before it became self-sufficient). This unit also supported diverse technical studies such as radiation mapping, climate measurement, energy analysis, an IADB-supported energy conservation project, etc. Other units include operation of a biogas pilot plant, and production of alcohol and bio-mass. INDOTEC studies livestock, storage of fruits and vegetables; it is available for further technical studies in these areas.

Activities and comments germane to energy use in the food/agriculture system:

a. IADB plans to fund analysis of solar energy in varied applications using INDOTEC as a major implementing agency.
b. It was not clear (in March, 1980) how the departure of the Energy Commission from INDOTEC would affect INDOTEC's capabilities and commitment to energy work.
c. INDOTEC is supported by the Central Bank principally. Public and private institutions have been reluctant to pay for even the direct cost of INDOTEC services (with the indirect costs being subsidized).
d. INDOTEC is oriented to research, experimentation, demonstrations, prototype development, and feasibility analysis; it is not oriented to implementing the results of these projects. The transition to operations deserves attention. Operating agencies can contract for INDOTEC work (e.g., from ODC, SEA, CEA, INDRHI) or results can be made available to private enterprises such as potential manufacturers of solar energy equipment, improved stoves, and windmills.

9. Private Sector and Other Institutions

There is a tendency to look only to GODR government agencies for implementation of energy programs. These agencies are generally overextended with non-energy programs, hampered by rigid budget procedures, often have austere budgets, and often have difficulty attracting and holding good personnel due to low salaries. Reaching the dispersed populations of the rural areas has never been an area of strength for Dominican national government agencies.

Frequently there are potential implementing agents in the *private sector.* For example, a current study on agricultural implements has found potential manufacturers at 7 to 10 locations including Santo Domingo, the secondary cities, and agroindustrial zones. With welding skills and other metal-working capabilities coupled with some outside encouragement (incentives, TA, designs, etc.) the same manufacturers could probably produce improved energy-using devices such as Lorena stoves, windmills, solar and bio-gas units, etc.

The Armed Forces are responsible for Forestry and for vocational education among other things in the Dominican Republic. For some natural resources programs, they may be the appropriate agency; e.g., for setting up climate measuring devices and monitoring them, using helicopters and personnel that other agencies will find hard to match.

Private voluntary organizations are active in the Dominican Republic and could be mobilized for energy improvement projects in rural areas.

B. PROBLEMS AND OPPORTUNITIES ANTICIPATED FOR ENERGY IMPROVEMENT ACTIVITIES IN THE FOOD/AGRICULTURE SYSTEM

1. Project Preparation

There is likely to be difficulty in getting from the "idea" stage to projects that are soundly conceived and sufficiently developed for financing. The international agencies expect to have many more funds available for energy-improvement projects than the funds required

for sound projects presented to them. INDRHI is considered particularly weak. CDE can use help too. For renewable-energy projects, the preparation could be done by CNPE, INDOTEC, SEA, or perhaps by other agencies with coordination from CNPE. Poor quality studies in the past have led to rejected projects, long delays in approval and/or implementation, and disappointing results (such as the low energy contributions from Tavera).

Project preparation appears to be a bottleneck for locally financed projects too. For more than a year FIDE has been offering loans *without placing anything.* It may be necessary to promote energy projects more aggressively, e.g., providing free or subsidized diagnosis of opportunities for improvements, or perhaps helping manufacturers, through technical assistance at cost or with subsidies, to solve their problems of production, marketing, distribution, and service.

It may be feasible to simplify the procedures for project preparation for small loans to finance improved energy devices (e.g., solar energy, windmills, stoves, bio-gas units, etc.).

An advisor to President Guzman is very concerned with the cost of imported oil. He needs help for crash projects that will have a prompt effect on the demand for oil. ONAPLAN does not *prepare* projects, so perhaps CNPE should provide the necessary professional support for developing projects that do not fit into the conventional categories.

2. Inter-institutional Coordination

Inter-institutional coordination is likely to be important for energy projects. The new Energy Commission provides an institution *responsible* for coordination, but the fulfillment of that role will not be a trivial task.

The most obvious problem is coordinated hydroelectric development. INDRHI has the jurisdiction under Law 6 of 1955, but their institutional weakness has led to CDE receiving a larger role which has not been fully specified or made legitimate. A committee has been set up to coordinate planning for hydroelectric development, and there is some allocation of responsibilities taking place In the case of mini-hydroprojects where many projects could go ahead in parallel, coordination could speed up implementation significantly.

Note that the interests of the food producers may be significantly hurt or helped, depending on how well they are represented in the process. The traditional focus on irrigation for farm production is being sacrificed to the need for power to feed the electric grid with less dependence on oil. The benefits may go to the cities at the expense of the farmers. Alternatively, availability of hydroelectric power at rural sites could become a stimulus to locating agroindustries in rural areas, generating employment and income for rural residents. The economic geography of the Dominican Republic could be significantly affected or totally neglected in the process.

The Rural Electrification Project - II could probably become much more valuable to rural residents if its focus was broadened to all kinds of energy, and CDE coordinated the planning with other interested institutions. The PER - II project is scheduled for IADB financing in 1981. The previous rural electrification project (PER - I) followed traditional lines—extending the existing electric grid to communities that could be reached at relatively low cost. There was no attention in the selection criteria to "inducing development" (e.g., second crops,

agricultural processing, etc.). Neither was there attention to decentralized sources of electricity or non-electrical forms of energy to serve rural needs. In 1980 the Dominican government is very concerned about its dependence on costly imported oil, a dependence that could be increased by major extensions of the electricity grid to rural energy users. There was even a joking reference to the PER-II project as a "rural *wiring* project," since there was going to be a shortage of electric generation capacity to match the expansion of the distribution system. Also, there are many energy needs that are better served with non-electrical energy. The sophistication of the Dominican government about these alternative technologies is sufficient to incorporate them into an aggressive *rural energy project.*

However, the project is presently conceived as an electrification project, and the Electricity Corporation is responsible for its preparation and implementation. The Energy Commission would probably have to take an active role to transform PER-II into a broader rural energy project. CDE would probably still have the lead in implementing the project, but other government institutions would get involved too. CNPE could coordinate the process, providing shared concepts, language, establishing a sense of teamwork, techniques for allocating responsibilities, and procedures for making changes in the plans over time. The Secretariat of Agriculture was supportive of CDE running the program (to sustain the pressure on CDE to supply electricity to rural residents), but SEA would welcome a role in planning improvements in energy for rural areas. As a minimum, the inter-institutional group would consider alternative sources of energy (such as solar, firewood, mini-hydro, bio-gas, windmills, etc.) and the end uses that deserve priority (including fuel for cooking, stoves, non-electric pumps for irrigation, and driers).

3. Linking Analysis to Planning, and Planning to Successful Implementation

It is predictable that there will be difficulties making the transitions from analysis to sound plans and from there to successful implementation which will improve the energy situation in the food/agriculture sector. Looking from a broad perspective first, many of the current energy improvement activities are analytical and/or experimental in character. They are done to improve our knowledge and understanding of the problems—which is unavoidable at this stage. The difficulties in turning the analysis into sound plans at the project level have already been discussed in Section B-1. The present report is the analytical foundation for planning improvements in the food/agricultural sector; the analysis will be read by the Energy Commission and other interested institutions, but it is not automatic that it will be used by any agency to proceed with projects to respond to the high priority needs and opportunities revealed in the analysis.

The links from "planning to successful implementation" are also fragile. The international agencies say that implementation is not the key problem from their point of view, but they refer to the ability to construct infrastructure and spend the loan proceeds according to the agreements. The subsequent problems of operations, maintenance, and inducing the changes in agriculture and rural employment are notoriously difficult to do in the Dominican Republic (and elsewhere). Once INDOTEC tests the solar energy designs for appropriateness for the Dominican Republic, there is no obvious implementing agency to get the sound

products into widespread use. That requires manufacturing, promotion, distribution, marketing, financing, maintenance, and probably further adaptation according to experience and to respond to the diverse needs of Dominican energy users. When FIDE made a line of credit available to finance energy improvements, it led to no response for at least a year and it is not clear as yet what more will be required to get a response. This example is developed further below.

The environment for bringing about energy improvements will also be influenced by government policies on fuel prices, regulation, subsidies, etc. So long as electricity and oil are subsidized--and the current gasoline price of RD $1.86 per gallon is still subsidized--enterprises will be discouraged from providing solar heaters, gasohol, and other substitutes for the traditional sources of energy. The President is being pressed to raise the price of electricity to get World Bank financing. However, these are hard political decisions. When the price of gasoline went up last year, there was a taxi-driver strike leading to several deaths.

The problems of "making the forward linkages" become even clearer with a specific example. For rural areas, what will be required to bring about *widespread use of "more efficient" energy devices* such as Lorena stoves, windmills, solar heaters, bio-gas units, etc.?

- *Analysis* of demand and prefeasibility studies can identify the potential savings by location, type of fuel, etc.: BDI Brookhaven National Laboratories, SEA, and/or others can do this analysis.
- *Technical testing, demonstration, and evaluation* can be done by INDOTEC or others, perhaps including tests of manufacturing methods, durability, operating costs, and consumer acceptance.
- Commercial operations will be needed (not just a pilot project) with medium scale *production, distribution* at multiple locations convenient to users of the new energy devices, an active promotion/marketing activity to change traditional patterns of energy use, and a system for financing sale of the new devices so potential users can afford the investment. Policy changes may be necessary to remove obstacles to changes in fuels such as subsidized prices for kerosine and electricity or treating firewood and bagasse as "free goods." Perhaps *subsidy* for new devices will be required to make their cost competitive.
- *Service, spare parts, maintenance, and adaptations to individual needs* are "second generation" problems that are generally neglected and reduce the benefit (energy savings) from the improved devices.

Establishing medium scale "commercial operations" will not be easy for INDOTEC or other government agencies. It is possible in the Dominican Republic that SEA (Secretariat of Agriculture) could facilitate these functions for some areas using the incipient manufacturing facility near La Vega and the developing systems of "CENSERIS" and farmer associations. Other alternatives also exist for private sector distribution.

The "downstream" functions (i.e., developing the network for medium scale commercial operations) do not have to await completion of the INDOTEC testing: manufacturers can be identified, oriented, and started. Regions where nontraditional devices are important and competitive (e.g., because of deforestation) can be identified and given priority for "consciousness raising," and subsidies if necessary.

Inter-institutional coordination by CNPE might accelerate the *benefits* from energy-saving devices by 2 to 5 years by starting the "downstream activities" early and doing them in parallel. The normal bureaucratic tendency will be to wait patiently for scientific results in a sequential process instead of pushing key items ahead without delay. Other steps that should be considered to accelerate the spread and effective use of improved energy devices are the following: some discretionary resources (at CNPE, perhaps?) for experimentation on marketing and commercial operations; tolerance for hybrid systems; overlapping and competitive approaches; consideration of high potential/high uncertainty approaches; cutting off "losers"; allowing successful entrepreneurial ventures to be profitable.

APPENDIX C

METHODOLOGY AND DATA SOURCES

An overview of the analytical objectives has already been given in Part I above, so only a brief repetition need be given here. A three-step process is involved.

- Obtain the data necessary to follow quantities of agricultural products through the flow patterns within various stages of the food chain from production to consumption. Details are in the Appendix and Appendix D.
- Quantify the energy inputs into individual agricultural products by food system stage and by energy source. Calculate energy use efficiencies.
- Make simple projections of implications of introducing changes into the system.

As shown earlier in Figure I-1, the data collection plan was meant to supplement certain survey data that already existed. These surveys were supervised by Practical Concepts Inc. in January-February 1980.

A. DATA COLLECTION PROCESS

1. Data Collection for Energy in Agricultural Production and Rural Households

The 1976 SEA-AID Agriculture Sector Survey contains excellent data on agricultural and livestock production, but does not contain information on energy use on the farm or in the rural household. Energy use by end use device at the household and farm level is also lacking. To complete these missing items, the PCI-SEA rural household survey was designed as a sub-sample from the same sampling strata as the earlier SEA-AID survey to assure comparability. An estimated sample of 1,000 rural households was drawn (800 farm families and 200 non-farm rural households) of which a total of 968 produced usable questionnaires.

The questionnaires combined energy use information for the rural household with crop mix and energy use information on the farm. The utilization of fuels by end use device was obtained. The questionnaire applied to the rural households is reproduced below as Figure C-1.

FIGURE C-1

RURAL HOUSEHOLD QUESTIONNAIRE, PCI-SEA, 1980

ENCUESTA DEL SECTOR RURAL

ENERGIA CONSUMIDA EN EL HOGAR Y EN LA FINCA

CONFIDENCIAL

Toda la información de esta encuesta será estrictamente confidencial. Los datos que se solicitan en ningún caso tienen fines fiscales y tampoco pueden utilizarse como prueba judicial.

Fecha

HORA DE LA ENTREVISTA

EMPEZAR	TERMINAR

ENTREVISTADOR:

Sin preguntar indique la dirección de la casa

_____

_____

y el nombre del jefe de la familia.

_____

a) Segmento		(001)
b) No. de Entrevista		(002)
c) Provincia		(003)
d) Región		(004)
e) Nombre de Entrevistador		(005)

TAMAÑO DE LA FAMILIA

1. a) ¿Cuántas personas viven actualmente en su casa incluyendo su propia familia, familiares, amigos y otros que viven y duermen en su casa?

Total		(006)
b) ¿Cuántas tienen mas de 64 años?		(007)
c) ¿Cuántas son hombres de 15 a 64 años?		(008)
d) ¿Cuántas son mujeres de 15 a 64 años?		(009)
e) ¿Cuántas son menores de 15 años?		(010)

EMPLEOS DE LA FAMILIA

2. a) ¿Cuántas de estas personas han estado trabajando por sueldo o salario durante los últimos 12 meses? . . . . . (011)

ENTREVISTODOR: Llene la tabla siguiente preguntando el nombre, clase de trabajo, sueldo ganado y tiempo trabajado por cada trabajo que hizo la persona.

Use el siguiente código para indicar el período de pagar:
1. Diario 2. Semanal 3. Mensual 4. Quincenal 5. Ajuste

Nombre	Trabajo	Días Trabajados o Meses Trabajados En Este Trabajo En los Últimos Doce Meses	Sueldo o Salario Diario, Semanal, Quincenal, Mensual o Ajuste	Total Ganado en el Año
		(012) (013) ___ Meses ___ Días	(014) (015) por ___ Código	(016) .00
		(017) (018) ___ Meses ___ Días	(019) (020) por ___ Código	(021) .00
		(022) (023) ___ Meses ___ Días	(024) (025) por ___ Código	(026) .00
		(027) (028) ___ Meses ___ Días	(029) (030) por ___ Código	(031) .00
		(032) (033) ___ Meses ___ Días	(034) (035) por ___ Código	(036) .00
		(037) (038) ___ Meses ___ Días	(039) (040) por ___ Código	(041) .00
		(042) (043) ___ Meses ___ Días	(044) (045) por ___ Código	(046) .00
		(047) (048) ___ Meses ___ Días	(049) (050) por ___ Código	(051) .00

b) ¿Cuántos pesos recibió de otras fuentes, tales como arriendos o trabajos pagados en efectivo, regalías, jubilaciones, etc.? 00 (052)

UTILIZACION DE LEÑA

[illegible]

(Si la cantidad es cero, pase a la pregunta 4)

b) ¿Cuánto dinero gastó para comprar la cantidad de leña que utilizó en los últimos siete días? . . . . . (054)

c) ¿Cuántos palos de leña por le costó dinero? . . . . . (055)

d) ¿En qué clases de materiales usó la leña y indique la cantidad usada?

	Unidad de Medida	
	[illegible]	[illegible]
Aserrín	[illegible]	[illegible]
Aserrín	[illegible]	[illegible]
Aserrín	[illegible]	[illegible]

e) Por la misma parte ¿Cuales son las especies de arbolés que utiliza para leña?

Especie de Árbol	[illegible]
Especie de Árbol	[illegible]

f) ¿A cuántos kilómetros de su casa queda el lugar donde obtiene la leña? . . . . . [illegible]

g) ¿Cuál es el camino (número o de palos utilizados? . . . . . [illegible]

UTILIZACION DE PARAFINA

4. a) Durante los últimos siete días, ¿Cuántas botellas de kerosene utilizó para fines domésticos en su propia casa? . . . . . [illegible]

(Si la cantidad es cero, pase a la pregunta 5)

b) ¿Cuánto dinero gastó para comprar esta cantidad de kerosene? . . . . . [illegible]

c) ¿En qué clases de aparatos usó este kerosene y qué cantidad fue utilizada?

	Unidad de Medida	
	[illegible]	[illegible]
Aserrín	[illegible]	[illegible]
Aserrín	[illegible]	[illegible]
Aserrín		[illegible]

d) ¿A cuántos kilómetros de su casa queda el lugar donde obtiene el kerosene? . . . . . [illegible]

e) ¿Qué tamaño de recipiente usa para comprar el kerosene? . . . . . [illegible]

f) ¿Cuánto le dura la cantidad que está en este recipiente? . . . . . [illegible]

UTILIZACION DE CARBON

5. a) Durante los últimos siete días, ¿Qué cantidad de carbón usó para fines domésticos en su propia casa? . . . . . [illegible]

(Si la cantidad es cero, pase a la pregunta 6)

b) ¿Cuánto dinero gastó para comprar carbón? . . . . . $ [illegible]

c) ¿Qué cantidad de este carbón por le costó dinero? . . . . . [illegible]

d) ¿En qué clase de recipiente usó el carbón y cual fue la cantidad usada?

	Unidad de Medida	
	[illegible]	[illegible]
Aserrín	[illegible]	[illegible]
Aserrín		

e) ¿A cuántos kilómetros de su casa queda el lugar donde obtiene el carbón vegetal? . . . . . [illegible]

f) ¿Cuántos kilos de carbón compra a la vez? . . . . . [illegible]

g) ¿Cuánto le dura una lata? . . . . . [illegible]

CODIGOS PARA LOS CULTIVOS TEMPOREROS

11[ ]Ají	21[ ]Habichuela Negra	31[ ]Tomate industrial
12[ ]Ajo	22[ ]Maíz	32[ ]Yautía
13[ ]Algodón	23[ ]Maní	33[ ]Yuca
14[ ]Arroz	24[ ]Melocotón	[ ]
15[ ]Ausubo	25[ ]Name	[ ]
16[ ]Batata	26[ ]Pana	[ ]
17[ ]Celosía	27[ ]Siete	[ ]
18[ ]Cetrón	28[ ]Soya	[ ]
19[ ]Guandul	29[ ]Tabaco	[ ]
20[ ]Habichuela Roja	30[ ]Tomate de ensalada	[ ]

CODIGOS PARA LOS CULTIVOS PERMANENTES

51[ ]Cacao	56[ ]Lechosa	[ ]
52[ ]Café	57[ ]Naranja dulce	[ ]
53[ ]Caña de Azúcar	58[ ]Piña	[ ]
54[ ]Coco	59[ ]Plátano	[ ]
55[ ]Guineo	60[ ]Pastos cultivados	[ ]

CULTIVOS EN LA FINCA DURANTE LOS ULTIMOS DOCE MESES

Area, producción y valor de ventas de los cultivos cosechados durante los últimos doce meses

Nombre del Cultivo	Para Uso Durante Otro		Tareas		Total de Producción: Cantidad	Unidad	Precio por Unidad	Para Uso Durante Otro		Valor de Ventas	
		[1151]		[1152]					[1153]		[1154]
		[1155]		[1156]					[1157]		[1158]
		[1159]		[1160]					[1161]		[1162]
		[1163]		[1164]					[1165]		[1166]
		[1167]		[1168]					[1169]		[1170]
		[1171]		[1172]					[1173]		[1174]
		[1175]		[1176]					[1177]		[1178]
		[1179]		[1180]					[1181]		[1182]
		[1183]		[1184]					[1185]		[1186]
		[1187]		[1188]					[1189]		[1190]
		[1191]		[1192]					[1193]		[1194]
		[1195]		[1196]					[1197]		[1198]
		[1199]		[1200]					[1201]		[1202]
		[1203]		[1204]					[1205]		[1206]
		[1207]		[1208]					[1209]		[1210]
		[1211]		[1212]					[1213]		[1214]
		[1215]		[1216]					[1217]		[1218]
		[1219]		[1220]					[1221]		[1222]
		[1223]		[1224]					[1225]		[1226]
		[1227]		[1228]					[1229]		[1230]

IDENTIFICACION DEL PRODUCTOR

14 ¿Cuál es el nombre del productor responsable por la siembra y cosecha o por crianza de ganado en esta finca?

Nombres	Apellidos	
	Paterno	Materno

¿Quien es el informante?

[ ] 1 Productor
[ ] 2 Miembro del Hogar o Capataz
[ ] 3 Familiar
[ ] 4 Otro Miembro
[ ] 5 Otro

Tipo Vínculo

UTILIZACION DE LA TIERRA

15 ¿Cuántas de las tareas en su finca estan dedicadas para

a) Cultivos Temporeros (como habichuelas, maíz, arroz) incluyendo los que fueron cosechados durante los últimos doce meses? To [ ]

b) Cultivos Permanentes (como café, plátano, cacao)? To [ ]

c) Pastos Cultivados (como pangola, verde guinea, estrella africana)? To [ ]

d) Pasto Natural? To [ ]

e) Monte y Bosque? To [ ]

f) Tierra en Descanso (para mejorar su productividad) (No incluya la tierra que está simplemente esperando que principie la estación de siembra) To [ ]

g) Otros Usos (como huertos familiares, casas, construcciones para animales, carreteras, zanjas para irrigación, tierra abandonada, etc.) To [ ]

h) TOTAL To [ ]

CULTIVOS MULTIPLES

15 a) ¿Cuántas tareas de su finca fueron sembradas más de una vez durante los últimos doce meses? To [ ]

UTILIZACION DE COMBUSTIBLES

17. a) ¿Qué combustibles utilizó en su finca en los últimos doce meses? (No incluya el combustible consumido en la casa)

	Volumen del Recipiente	Tiempo que le dura este Volumen	Total Consumido Galones	Precio por Galón $	Valor Total Consumido	Utilización de Combustibles por Equipo* Código* CF Cantidad	Código CF Cantidad	Código* CF Cantidad
Gasolina	(231)	(232)	(233)	(234)	(235)	(236)	(239)	(242)
						(237)	(240)	(243)
						(238)	(241)	(244)
Gas Ud	(245)	(246)	(247)	(248)	(249)	(250)	(253)	(256)
						(251)	(254)	(257)
						(252)	(255)	(258)
Aceite	(259)	(260)	(261)	(262)	(263)	(264)	(267)	(270)
						(265)	(268)	(271)
						(266)	(269)	(272)
Grasa (lb)	(273)	(274)	(275)	(276)	(277)	(278)	(281)	(284)
						(279)	(282)	(285)
						(280)	(283)	(286)
Kerosene (Botella)	(287)	(288)	(289)	(290)	(291)	(292)	(295)	(298)
						(293)	(296)	(299)
						(294)	(297)	(300)

b) ¿A cuántos kilómetros de su finca queda el lugar donde compró

la gasolina? _____ km (301)
el gas ud? _____ km (302)
el aceite? _____ km (303)
El Kerosene? _____ km (304)

* Entrevistador Use el siguiente código para indicar la forma de utilización de los combustibles

1 = tractor 2 = bomba 3 = ordeño
4 = generador de energía eléctrica 5 = cosechadora 6 = lámpara

18 ¿Qué cantidad de energía eléctrica (no producida en su finca) utilizó en su finca? (no incluya la energía eléctrica consumida en la casa en los últimos doce meses)

	Número de Kilómetros	Costo Total	Equipos* que usan energía eléctrica y las horas de uso por semana de cada uno (CF = capítulo de fuerza, sin mono) Código CF horas/sem	Código CF horas/sem	Código CF horas/sem	Código CF horas/sem	Código CF horas/sem	Código CF horas/sem
Energía Eléctrica	(305)	(306)	(307)	(310)	(313)	(316)	(319)	(322)
			(308)	(311)	(314)	(317)	(320)	(323)
			(309)	(312)	(315)	(318)	(321)	(324)

* Entrevistador Use el siguiente código para indicar el tipo de equipo

1 = Bomba eléctrica 2 = Motor eléctrico de otros usos
3 = 4 =

UTILIZACION DE [illegible] TIPOS DE COMBUSTIBLES

19 ¿Qué otros tipos de combustibles utilizó en su finca (No incluya los combustibles consumidos en la casa) en los últimos doce meses?

	COMPRADO			NO COMPRADO			UTILIZACION DE ENERGIA POR APARATO*				
				Cantidad (Quema)			COD* CANT	COD* CANT	COD* CANT	COD* CANT	COD* CANT
Leña (Leña)	(325)	(326)	(327)	(328)	(329)	(330)	(331)	(333)	(335)	(337)	[illegible]
							(332)	(334)	(336)	(338)	[illegible]
Carbón (Leña o carbón)	(341)	(342)	(343)	(344)	(345)	(346)	(347)	(349)	(351)	(353)	[illegible]
							(348)	(350)	(352)	(354)	[illegible]
Otros	(357)	(358)	(359)	(360)	(361)	(362)	(363)	[illegible]	[illegible]	[illegible]	[illegible]
							(364)	(366)	(368)	(370)	[illegible]

¿A cuántos kilómetros de su finca queda el lugar donde compró

La leña? _____ km
El Carbón? _____ km

*ENTREVISTADOR Use la siguiente código para indicar la forma de utilización de los otros tipos de energía

1 = Estufa 3 = Fogón
2 = Horno 4 = Otro

20 Comparando la distancia al lugar donde saca la leña ahora a la distancia al lugar donde se iba la leña diez años atrás, ¿es

Mucho más ahora que antes? _____ 1
Más ahora que antes? _____ 2
Igual a la distancia anterior? _____ 3
Menos ahora que antes? _____ 4
Mucho menos ahora que antes? _____ 5 (399)

UTILIZACION DE GASOLINA

8 a) Durante los últimos siete días, ¿Cuántos galones de gasolina usaron para fines domésticos en esta casa? . . . . . [ ] gal [ ]

(Si la cantidad es cero, pase a la pregunta 7)

b) ¿Cuánto dinero gastó para comprar esta cantidad de gasolina? . . . . . [ ] [ ]

c) Cada vez que compra gasolina ¿Cuántos galones de gasolina compra? . . . . [ ] gal [ ]

d) ¿A qué frecuencia compra esta cantidad? . . . . . [ ] días [ ]

e) ¿En qué clase (s) de aparato (s) usó esta gasolina y que cantidad fue utilizada?

	uso de informa	
	[ ]	[ ] gal [ ]
Aparato	[ ]	[ ] gal [ ]
Aparato		

f) ¿A cuántos kilómetros de su casa queda el lugar donde compra gasolina? . . . [ ] km [ ]

UTILIZACION DE ENERGIA ELECTRICA

7. a) Durante el mes pasado, ¿Qué cantidad de energía eléctrica usó en su propia casa? . [ ] kw [ ]

(Si la cantidad es cero, pase a la pregunta 8)

b) ¿Cuál fue el costo total de esta energía eléctrica? . . . . . [ ] [ ]

c) ¿En qué clase (s) de aparato (s) fue usada esta energía eléctrica?

	uso de informa	Cuántos	Horas de uso por semana
bombillas	0 1	[ ]	[ ]
nevera	0 2	[ ]	[ ]
televisión	0 3	[ ]	[ ]
radio	0 4	[ ]	[ ]
plancha	0 5	[ ]	[ ]
licuadora	0 6	[ ]	[ ]
____	[ ]	[ ]	[ ]
____	[ ]	[ ]	[ ]
____	[ ]	[ ]	[ ]

UTILIZACION DE GAS PROPANO

8 a) Durante el último mes, ¿Utilizó gas propano en su casa para fines domésticos? . . SI [ ] 0 NO [ ] 1 [ ]

(Si la respuesta es "No," pase a la pregunta 9)

b) ¿Qué tipo de tanque o cilindro de gas propano utiliza? 25 lbs [ ] 1 50 lbs [ ] 2 100 lbs [ ] 3 [ ]

c) ¿Cuál fue el costo total de esta cantidad de propano? . . . . . [ ] [ ]

d) ¿En qué aparato (s) usó el gas propano?

	uso de informa	
aparato	[ ]	[ ]
aparato	[ ]	[ ]

e) ¿Cuántos días le dura el tanque o cilindro de gas? . . . . . [ ] días [ ]

UTILIZACION DE OTROS TIPOS DE COMBUSTIBLES

9 a) ¿Durante los últimos siete días, usó otro tipo de combustibles para cocinar? SI [ ] 0 NO [ ] 1 [ ]

(Si la respuesta es "No" pase a la pregunta 10)

b) ¿Cuál fue el combustible usado para cocinar y cuál fue la cantidad utilizada?

	uso de informa	
Marca	[ ]	[ ]
Marca	[ ]	[ ]

10 Durante la semana pasada, ¿Cuántas personas en su casa

[ ]
[ ]
[ ]

11. Durante el último mes, ¿Cuántos días trabajaron miembros de la familia cortando y recogiendo leña? . . . . . [ ] días [ ]

a) ¿A qué distancia está el lugar donde recoge su leña? _____ [ ] km [ ]

b) ¿Cuánto tiempo le dura para reemplazar su pila de leña? _____ [ ]

c) ¿Cuánto tiempo le dura un palo puesto al fogón? _____ [ ]

d) ¿Cuántas horas diarias funciona el fogón? _____ [ ]

12. Comparando las cantidades de energías y combustibles que ya utiliza a las cantidades que utilizó hace un año, ¿Ya utiliza más, menos, o la misma cantidad de

	más	igual	menos	
a) leña?				[ ]
b) kerosene?				[ ]
c) carbón?				[ ]
d) gasolina?				[ ]
e) energía eléctrica?				[ ]
f) gas propano?				[ ]
g) gas cal?				[ ]

13 a) ¿Cuántas tareas ocupa en la producción agrícola? (tal como el la producción de cultivos temporeros, cultivos permanentes, o pastos, etc.) [ ]

(ENTREVISTADOR: Si la respuesta es 8 tareas o más, pase a la pregunta 13. Si la respuesta es menos de 8 tareas, hace la próxima pregunta.)

b) ¿Vive alguien en esta casa que haya operado por su propia cuenta y riesgo empresa, industria o negocio durante los últimos 12 meses? . . . . SI [ ] 0 NO [ ] 1 [ ]

(ENTREVISTADOR: Si la respuesta es "Si," pase a la Encuesta de Empresas. Si la respuesta es "No," termine la entrevista.)

2. *Data Collection for Agricultural Processing and Marketing*

The National Statistical Office conducts a well designed survey of industrial establishments which contains very detailed energy input data. This survey includes the universe (and should perhaps be called a census) of medium and large scale agricultural processing plants. This data set was available to the PCI team in detailed published tables which were sufficiently detailed to permit the necessary energy inputs and product flow analysis.

The ONE (National Statistical Office) survey, however, excluded food processing industries with less than 5 workers and did not include marketing enterprises. To obtain data on small scale marketing and agricultural processing enterprises (both rural and urban), PCI designed a survey which was undertaken by SEA in early 1980. This survey included 782 small scale enterprises (both agricultural processing and marketing) in urban areas including towns and villages to capture rural enterprises. The data gathered outlines the general structure of the enterprise, employment, general classes of inputs, value of output, and detailed information on energy use and energy end use devices. The questionnaire used in the small scale enterprise survey is reproduced below as Figure C-2. (Questions 1-13 are the same as Figure C-1.)

FIGURE C-2

SMALL SCALE AGRICULTURAL PROCESSING AND MARKETING ENTERPRISE SURVEY, 1980

ENCUESTA DE EMPRESAS

14. a) ¿Cuántas personas viven en esta empresa la mayor parte del año? . . . . . [illegible]

b) ¿Cuántas empresa(s), negocio(s) o industria(s) hay que han operado o operaron durante el presente año? . . . . . [illegible]

c) Si su empresa ha estado inactiva durante los últimos 12 meses ¿Cuántos meses fueron? . [illegible]

18 a) ¿Cuál fue el valor [illegible] equipo, maquinarias, herramientas, instalaciones, vehículos y edificios [illegible] operaciones?

b) De reemplazar el equipo [illegible] ¿Cuánto le costaría?

$	(142)
$	(143)

19. ¿Cuál fué el valor total de [illegible] brutas de esta empresa durante los últimos 12 meses? . . .
¿Cuánto gastó esta empresa durante los últimos 12 meses para: a) Materia Prima? . .
b) Equipo Adicional? .
c) Personal Remunerado?
d) Arrendamiento? . .
e) Otros Gastos? . . .
f) Total? . . . . .

.00	(148)
.00	(149)
.00	(150)
.00	(151)
.00	(152)
.00	(153)
.00	(154)

UTILIZACION DE GASOLINA Y GAS OIL

20. ¿Qué combustibles utilizó en su empresa durante los últimos 12 meses?
(si la cantidad es cero, pase a la pregunta 22)

	Total Consumido (Galones)	Precio por Galón	Valor Total Consumido ($)	CANTIDADES DE COMBUSTIBLES UTILIZADOS POR EQUIPO					
				Motores	No.	Motores	No.	Motores	No
				Marca	CF	Marca	CF	Marca	CF
				Código*	Cantidad	Código*	Cantidad	Código*	Cantidad
Gasolina	(156)	(156)	(157)	XXXXXXXX	(158)	XXXXXXXX	(163)	XXXXXXXX	(168)
			$ .00	(159)	(160)	(164)	(165)	(169)	(170)
				(161)	(162)	(166)	(167)	(171)	(172)
Gas Oil	(173)	(174)	(175)	XXXXXXXX	(176)	XXXXXXXX	(181)	XXXXXXXX	(186)
			$ .00	(177)	(178)	(182)	(183)	(187)	(188)
				(179)	(180)	(184)	(185)	(189)	(190)

21. ¿A qué distancia de su empresa está el lugar donde usted compra los combustibles siguientes:
a) Gasolina? . . . . . km (191)
b) Gas oil? . . . . . km (192)

*ENTREVISTADOR: Use el siguiente código para indicar la forma de utilización de los combustibles.

1. Bomba.
2. Producir energía eléctrica.
3. Transportar productos.
4. Transportación de gente.
5. Equipos de fabricación o elaboración.

UTILIZACION DE ENERGIA ELECTRICA

22. ¿Qué cantidad de energía eléctrica (no producida en la empresa) utilizó su empresa en el último mes?
(si la cantidad es cero, pase a pregunta 23)

	No. de Kilo vatios	Costo Total	Tipo de Aparato		Número de cada tipo y horas de uso de un solo aparato por día			
			Código*	Código*	Código*	Código*	Código*	Código*
			No	No.	No.	No.	No.	No.
			hrs/día	hrs/día	hrs/día	hrs/día	hrs/día	hrs/día
	(193)	(194)	(195)	(198)	(201)	(204)	(207)	(210)
			(196)	(199)	(202)	(205)	(208)	(211)
			(197)	(200)	(203)	(206)	(209)	(212)

* ENTREVISTADOR: Use el siguiente código para indicar la forma de utilización de energía eléctrica.

1. Bombillas de 60W
2. Bombillas de 100W
3. Radio Tocadisco
4. Nevera
5. Abanico
6. Licuadora
7. Bomba de agua
8. 8000 BTU (120V)
9. 10000 BTU (120V)
10. 12000 BTU (200V)
11. 15000 BTU (200V)
12. 21000 BTU (200V)
13. 24000 BTU (200V)

Aire Acondicionado

14. Equipo eléctrico que usa en fabricación o elaboración de productos.

15. a. ¿Qué clase(s) de empresa(s), negocio(s) o industria(s) es (son)?

1. Extracción y elaboración de madera y sus sub-productos	01	
2. Hilado, tejido y acabado de textiles y sus sub-productos	02	
3. Preparación y tenido de pieles, cueros y sus sub-productos	03	
4. Industrias básicas de procesos metalicos y la fabricación de artículos de ferretería	04	
5. Extracción y fabricación de productos minerales no métalicos (barro, arena, cal, cemento, etc.) para uso en la construcción	05	
6. Fabricación de objetos de barro, loza, porcelana, vidrio y productos de vidrio	06	
7. Industrias manufactureros diversas no especificadas previamente	07	
8. Carnicería de toda clase animales agropecuarios (ganado, pollo, te) y la preparación y conservación de la carne obtenida	08	
9. Fabricación, preparación de productos lácteo alimenticios	09	
10. Elaboración, envase y conservación de frutas y legumbres	10	
11. Elaboración, de granos básicos y fabricación de productos de molino	11	
12. Fabricación de productos de panadería	12	
13. Elaboración de productos alimenticios diversos	13	
14. Elaboración de alimentos concentrados para animales	14	
15. Comercio al por mayor y por menor que involucre la reventa (sin transformación) de productos diversos (pulperías, tiendecitas, almacenes, farmacias, etc.)	15	
16. Mercado de productos alimenticios	16	
17. Comercios diversos no especificados previamente	17	
18. Combustibles (procesamiento, preparación, comercio, etc.)	18	

b) Las preguntas que aparecen a continuación se refieren a la empresa con el código . . . (137)
c) ¿En qué año empezó a operar esta empresa? . . . . . (138)

16. ¿Cuántas personas normalmente trabajan en esta empresa? . . . . . (139)

ENTREVISTADOR: Si hay más de 5 empleados y el código es menos de 8 termine la entrevista.

17. a) ¿Cuántos meses durante los últimos 12 funcionó esta empresa en plena actividad? . . . (140)
b) ¿Cuántas personas trabajaron durante este tiempo de plena actividad? total . . . . . (141)
remuneradas . . (142)
no remuneradas . (143)
c) ¿Cuántas personas trabajaron fuera del tiempo de plena actividad? . . . . . (144)
d) De todas las personas remuneradas, ¿Cuál fué el sueldo promedio pagado por mes? . . $ .00 (145)

UTILIZACION DE OTROS TIPOS DE ENERGIA

27. ¿Qué otros tipos de combustibles utilizó su empresa durante los últimos 12 meses?
(si la cantidad es cero, pase a la pregunta 29)

	COMPRADO			NO COMPRADO			Cantidades Energías Utilizadas por Aparato					
	Cantidad	Unidad	Precio por Unidad $	Dentro de su Propiedad	Fuera de su Propiedad	Unidad	Código*	Cantidad	Código*	Cantidad	Código*	Cantidad
Leña (palos)	(262)	(263)	(264)	(265)	(266)	(267)	(268)	(269)	(270)	(271)	(272)	(273)
Carbón Vegetal (tala o saco)	(274)	(275)	(276)	(277)	(278)	(279)	(280)	(281)	(282)	(283)	(284)	(285)
Otro	(286)	(287)	(288)	(289)	(290)	(291)	(292)	(293)	(294)	(295)	(296)	(297)

28. ¿Qué es la distancia de su empresa al lugar donde compro a) la leña? ____ km (298)
b) el carbón vegetal? ____ km (299)

*ENTREVISTADOR Use el siguiente código para indicar la forma de utilización de energía:

1. Estufa
2. Horno
3. Fogón
4. Otro equipo utilizado en la fabricación de productos
5.
6.

(Si esta empresa no es un transporte, pase a la pregunta 32)
si esta empresa es de transporte, pregúntele:

29. ¿Qué productos transportan?
a) ____ (300)
b) ____ (301)
c) ____ (302)
d) ____ (303)
e) ____ (304)
f) ____ (305)

30. ¿Qué clase (s) de vehículo (s) usa para transportar sus productos?
a) ____ (306)
b) ____ (307)
c) ____ (308)

31. a) ¿Cuánto recorre su vehículo por día? . . . . . km (309)
b) ¿Cúal es la distancia promedio en kilómetros de un recorrido común (ida y vuelta)? . km (310)
c) ¿Cúal es la distancia promedio en kilómetros en el recorrido con los vehículos vacíos? . km (311)
d) ¿Cuántos kilómetros por galón corren sus vehículos (cargagos)? . . . . . km/gal (312)
e. ¿Cuántos kilómetros por galón corren sus vehículos (vacíos)? . . . . . km/gal (313)

(si la empresa no almacena productos alimenticios por más de una semana termine la entrevista)

32. ¿Cuáles son los productos que usted almacena y el tiempo promedio (en semanas) de almacenamiento?

Producto			Tiempo		
		(314)			(315)
		(316)			(317)
		(318)			(319)
		(320)			(321)
		(322)			(323)

33. ¿Qué capacidad de almacenamiento tiene para utilizar: a) refrigeración? . . . . ____ (324)
b) no refrigerado? . . . ____ (325)
____ (326)

UTILIZACION DE KEROSENE Y GAS PROPANO

23 ¿Cúales fueron las cantidades y precios de kerosene y gas propano en su empresa y cuánto le dura las cantidades compradas?

(si la cantidad es cero, pase a la pregunta 25)

	Cantidad Comprada	Tiempo que le dura (días)	Costo Total $	Utensilios Aparato y Cantidades utilizadas por ellos			
				Código* Cantidad	Código* Cantidad	Código* Cantidad	Código* Cantidad
Kerosene	(213) lot	(214) días	(215) $ .00	(216) (217)	(218) (219)	(220) (221)	(222) (223)
Gas Propano	(224) lb	(225) días	(226) $ .00	(227) (228)	(229) (230)	(231) (232)	(233) (234)

24. ¿A qué distancia de la empresa está el lugar donde compra el kerosene? . . . . . km (235)

* ENTREVISTADOR. Use el siguiente código para indicar la forma de utilización de gas propano y kerosene.

1. Estufa
2. Calentador de agua
3.
4.

UTILIZACION DE ACEITES Y GRASAS

25. ¿Cúales fueron las cantidades y precios de grasas y aceites utilizadas en su empresa durante los últimos 12 meses?

(si la cantidad es cero, pase a la pregunta 27)

	Cantidad Total Comprado	Unidad	Precio por Unidad $	Cantidades Utilizadas por Aparato					
				Código	Cantidad Número	Código	Cantidad Número	Código	Cantidad Número
Aceites	(236)	(237)	(238)		(239)		(242)		(245)
				(240)	(241)	(243)	(244)	(246)	(247)
Grasas	(248)	(249)	(250)		(251)		(254)		(257)
				(252)	(253)	(255)	(256)	(258)	(259)

26. ¿A qué distancia de la empresa está el lugar donde compró a) el aceite? . . . . . km. (260)
b) la grasa? . . . . . km. (261)

ENTREVISTADOR: Use el siguiente código para indicar la forma de utilización de aceites y grasas:

1. Tractor
2. Bomba
3. Camión
4. Generador de energía eléctrica
5. Otros vehículos
6. Equipo de fabricación o elaboración
7.

B. FOOD SYSTEMS FLOW MODEL

The methodology used to estimate product flows from production through intermediate stages of processing, marketing and transportation to final consumption is a modified version of traditional Input/Output technique. In order to permit later use of the flow model in analysis of technological change and change in energy coefficients, it was necessary to disaggregate sectors by technology.

Table C-1 outlines the sectoral scheme of a part of the flows model to indicate the method used to separate production and distribution activities into technological levels.

TABLE C-1

SECTORAL STRUCTURE OF THE INPUT/OUTPUT FLOWS MODEL

Production Sub-sectors	Processing Sub-sectors	Primary Transport Sub-sectors	Marketing-Storage and Secondary Transportation Sub-sectors
High Technology	On Farm Processing	Motorized Vehicles	Small Scale
Medium Technology	Small Scale Processing	Animal Transport	Medium & Large Scale
Low Technology	Medium & Large Scale Processing	Human Transport	

1. Agriculture Production

Thus, for each of the major agricultural products (12), production is divided into three separate technological levels. The High Technology production is that production utilizing mechanization *and* in the top three-fourths of farms when ranked by quantities of fertilizer used. Mid Technology is defined as production utilizing mechanization *or* in the top three-fourths of farms when ranked by the quantities of fertilizer used. Low technology is unmechanized and in the lowest one-fourth of farms when ranked by fertilizer use. Besides this simplified classification of crop technology which is used to simplify the flow model, a much more complete technological classification is included for energy input calculations. The fuller breakdown separates crop production technologies into 27 groups based on seed variety, multiple or associated cultivation patterns, quartiles of chemical use, irrigation, four levels of mechanization, farm size, and region. All flows and energy input coefficients are computed at this more detailed level of technological disaggregation. Figure C-3 and Table C-2 present examples for distribution of production used in constructing the food systems flow model for rice to illustrate the analytical procedure.

2. Agricultural Processing

Agricultural processing is divided into three sub-sectors in the flow model. One sector each is created for farm level processing for each of the 15 major projects, one sector for small scale processing enterprises, and 17 sectors (for product types) for medium and large scale agricultural processing.

3. Primary Transportation

The transportation of agricultural products from the farm to the first marketing or processing point is divided into three sub-sectors-- motorized vehicles, animal transport, and human transport. Secondary transportation, which takes place between processing, wholesale and retail trade is included in the processing and marketing sectors.

4. Marketing, Storage and Secondary Transportation

Marketing, storage and secondary transportation activities are divided into three sub-sectors–small scale (less than five workers), medium and large scale, and on farm storage.

5. Input/Output Methodology for Elaborating the Food Systems Flow Model

Utilizing all of the existing and supplementary surveys, and available secondary source materials, a product input/output table is elaborated in quantity units to depict the horizontal "output" of product as it flows from one sub-sector to another, and the vertical "input" of product into a receiving sub-sector. An example of one of the I/O tables for rice is presented in Table C-2. Final consumption is divided into income levels utilizing the Banco Central Household Survey strata groupings. A special household sector is created for rural consumption which takes place directly from the farm without passing through processing, transport or marketing. This sub-sector is assumed to be composed of rural households of the subsistence type mainly from the lowest income strata. Four consumption flows enter this household group. First, direct autoconsumption of production at or near harvest time. Second, in-kind payments to workers. Third, direct cash sales to neighboring rural households. Fourth, family consumption of products stored at the farm level for consumption not during the harvest season.

Losses occur at each level in the food chain and are reported as a row "output" from each of the sectors. See Appendix D for further explanation and data for all crops.

6. Food Systems Flow Diagrams

In order to display the flow data contained in the Input/Output models for each of the products, product flow diagrams have been elaborated. Figure C-3 presents an example of the flow diagram for rice to illustrate the methodology. Circled numbers refer to columns in Table C-2.

C. ENERGY INPUTS COEFFICIENTS ESTIMATION

Energy inputs are estimated in fuel quantities (and chemicals in production) and in Kilo Calories for each of the sub-sector food production and distribution activities included in

TABLE C-2

RICE INPUT/OUTPUT TABLE

100'S OF TONS

		Farms Production Technology			Primary Transport to First Sale Point			Processing			Marketing & Storage Transport			Consumption Household Income Levels						
		High 1	Med. 2	Low 3	Motor 4	Animal 5	Human 6	Farm Level 7	Small Scale 8	Large Scale 9	Farm Storage 10	Small Scale 11	Large Scale 12	Rural 13	I 14	II 15	III 16	IV 17	Exports 18	Losses 19
1. Production	High	36.0	–	–	1,784.3	672.3	129.3	0.0	–	–	12.9	–	–	265.2	–	–	–	–	0.0	–
2.	Med.	–	8.4	–	161.7	60.9	11.7	0.0	–	–	44.1	–	–	105.8	–	–	–	–	0.0	–
3.	Low	–	–	3.1	21.9	8.2	1.6	0.0	–	–	6.4	–	–	31.7	–	–	–	–	0.0	–
4. Transportation	Motor	–	–	–	–	–	–	–	255.1	1,706.9	–	0.0	0.0	–	–	–	–	–	–	5.9
5.	Animal	–	–	–	–	–	–	–	96.1	643.1	–	0.0	0.0	–	–	–	–	–	–	2.2
6.	Human	–	–	–	–	–	–	–	18.5	123.7	–	0.0	0.0	–	–	–	–	–	–	0.4
7. Processing	On Farm	–	–	–	–	–	–	–	–	–	–	0.0	0.0	–	–	–	–	–	–	0.0
8.	Small	–	–	–	–	–	–	–	–	–	–	162.2	206.4	–	–	–	–	–	–	3.4
9.	Med. & Large	–	–	–	–	–	–	–	–	–	–	1,085.1	1,381.1	–	–	–	–	–	–	1.1
10.Marketing &	On Farm	–	–	–	–	–	–	–	–	–	–	–	–	63.4	–	–	–	–	–	1.9
11. Storage	Small	–	–	–	–	–	–	–	–	–	–	–	–	–	99.1	347.7	565.0	231.8	–	3.7
12.	Med. & Large	–	–	–	–	–	–	–	–	–	–	–	–	–	126.2	442.5	719.0	295.0	–	4.8
13. Households	Rural I	–	–	–	–	–	–	–	–	–	–	–	–	–	–	–	–	–	–	–
14.	Strata I	–	–	–	–	–	–	–	–	–	–	–	–	–	–	–	–	–	–	–
15.	II	–	–	–	–	–	–	–	–	–	–	–	–	–	–	–	–	–	–	–
16.	III	–	–	–	–	–	–	–	–	–	–	–	–	–	–	–	–	–	–	–
17.	IV	–	–	–	–	–	–	–	–	–	–	–	–	–	–	–	–	–	–	–

FIGURE C-3

EXAMPLE FLOW DIAGRAM FOR RICE

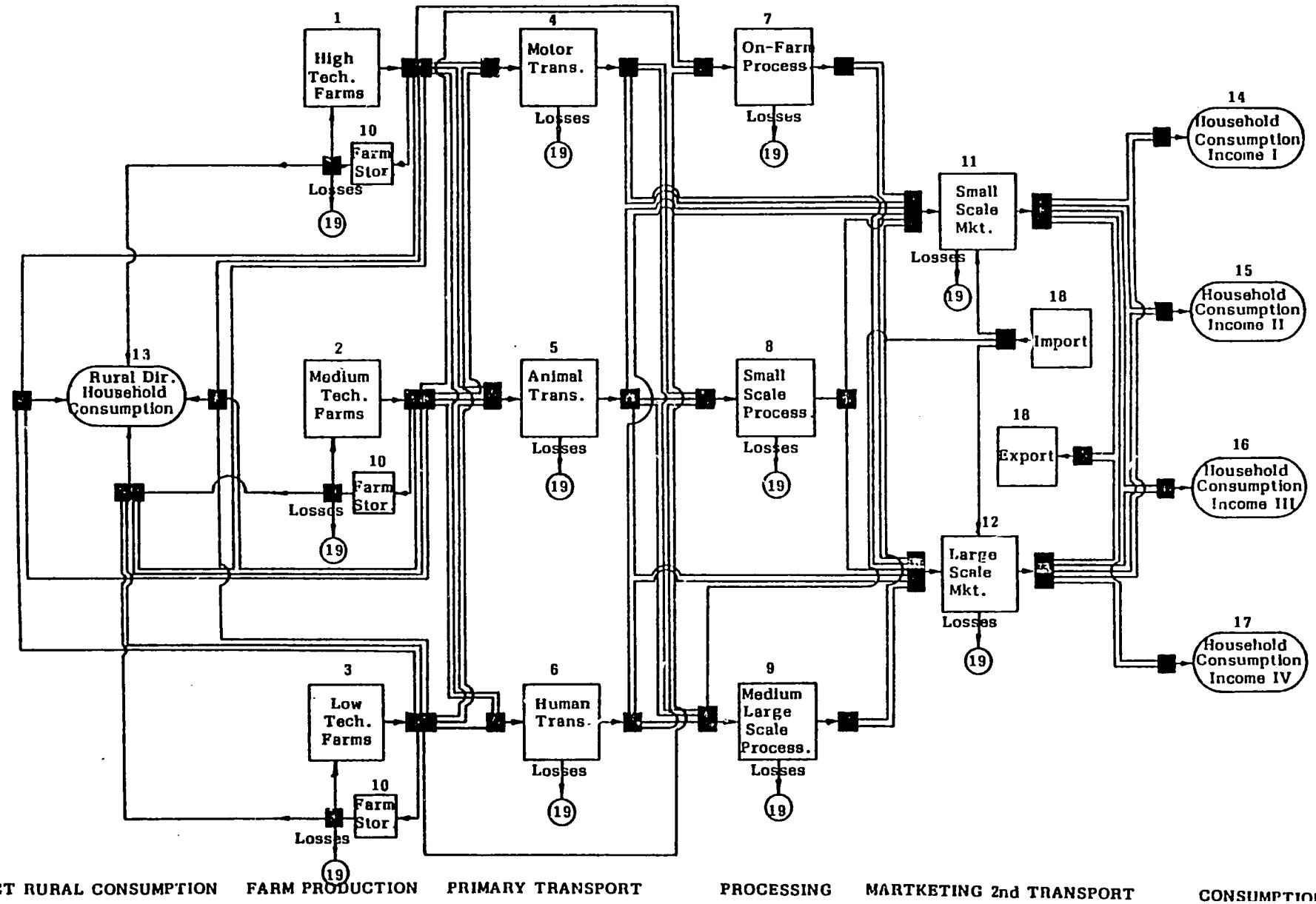

the flow model for each product. These Energy Input Coefficients tables are disaggregated by technology to illustrate the impact of alternative production processes on energy use. Table C-3 presents a sample energy input coefficients table for rice to illustrate the format of these estimates. The last two columns in the table present energy Input/Output efficiency for rice. For example, ratio 1 indicates that for average rice production technology in the DR, the energy value of the rice produced is 8.6 times as great as the energy consumed in its production. The energy inputs in ratio one include mechanical replacement energy for human and animal labor, ratio two includes only fuels and chemical fertilizers.

When expanded from the sample to the national level, these input coefficients indicate the total energy consumed at each of the food system stages for each of the major products.

TABLE C-3

SAMPLE ENERGY INPUT COEFFICIENTS CALCULATIONS FOR RICE

ARROZ

ENERGY INPUTS PER METRIC TON PRODUCED

	NO. OBS.	MECHANICAL FUELS LITERS	MECHANICAL FUELS KCAL.	POWER ANIMAL DAYS	MAN DAYS	MECHANICAL REPLACEMENT LITERS	MECHANICAL REPLACEMENT KCAL.	CHEMICALS NITROGEN LBS.	NITROGEN KCAL.	PHOSPHORUS LBS.	PHOSPHORUS KCAL.	POTASSIUM LBS.	POTASSIUM KCAL.	TOTAL KILO CALORIES
VARIETY														
HYBRID	1	5,00	46154	0,00	42,33	12,3	113969	45,5	286591	68,2	74250	68,2	40227	447222
IMPROVED	111	3,86	35605	0,75	8,74	4,1	37589	35,1	221608	27,2	29591	13,6	8034	294838
NATIVE	172	4,65	42941	1,84	9,39	6,5	60038	65,6	413595	32,4	35320	26,4	15597	507454
CROPPING														
MULT./ASSO.	34	1,08	9998	1,65	50,24	18,0	166342	2,4	15118	1,4	1512	0,7	410	27037
SOLO	250	4,27	39431	1,27	8,81	5,2	47576	50,2	316527	30,1	32814	20,2	11809	400671
CHEMICALS														
NONE	88	1,89	17461	3,56	54,76	23,2	214437	0,0	0	0,0	0	0,0	0	17461
1 QUART.	48	3,46	31909	1,44	12,36	6,5	60359	11,1	70112	6,9	7565	4,5	2683	112269
2 QUART.	49	4,83	44626	0,94	9,96	4,8	44561	33,7	212763	28,0	30447	13,2	7766	295603
3 QUART.	49	5,36	49523	1,20	8,09	4,8	44460	51,9	326973	35,0	38123	26,4	15586	430205
4 QUART.	50	3,20	29548	1,46	5,21	4,5	41480	78,5	495055	36,3	39510	28,0	16518	580631
IRRIGATION														
YES	189	4,27	39405	1,27	8,22	5,0	45974	52,7	332315	31,1	33848	20,9	12332	417901
NO	95	3,90	35977	1,31	21,94	9,1	83834	11,3	71312	14,0	15270	8,1	4750	127309
POWER														
NONE	121	0,00	0	8,47	25,77	24,8	228999	46,4	292769	9,5	10392	4,8	2815	305976
1-2	87	2,57	23755	3,71	15,08	12,0	110576	44,1	278140	17,8	19433	11,0	6482	327811
3-5	75	4,61	42602	0,29	6,40	2,5	22666	51,2	322652	32,7	35588	22,4	13218	414059
6-7	1	13,19	121844	1,42	28,35	11,2	103045	39,0	245776	56,7	61746	28,3	16726	446093
CULTIVATED														
0-1 HA	116	0,00	0	7,78	39,91	27,5	254009	45,0	283440	14,5	15822	7,1	4174	303436
1-3 HA	84	1,88	17408	4,06	18,27	13,6	125762	47,1	296793	22,9	24952	13,3	7870	347023
3-10 HA	59	3,38	31256	2,11	9,91	7,2	66441	41,6	262067	25,5	27793	15,4	9084	330199
10+ HA	25	4,93	45527	0,43	6,50	2,8	25513	52,3	329616	32,5	35358	22,5	13274	423776
REGION														
NORTE	39	6,26	57839	0,24	4,89	1,9	17759	89,3	563040	38,5	41974	33,2	19562	682415
NORDESTE	49	4,07	37572	0,43	7,54	3,1	28307	30,9	194923	32,6	35452	25,2	14847	282794
NOROESTE	48	3,68	33989	0,43	9,91	3,8	34737	34,4	216580	26,4	28715	10,6	6240	285524
CENTRAL	37	5,63	51953	0,54	16,97	6,1	55895	19,5	122823	30,2	32887	21,7	12784	220447
SUROESTE	74	0,51	4756	10,21	15,00	25,2	232858	66,8	421008	10,6	11505	5,4	3191	440459
SUR	23	4,47	41319	2,41	63,92	23,5	217453	5,1	31867	5,8	6290	2,9	1704	81181
ESTE	14	4,64	42837	1,04	16,63	7,0	64416	48,0	302696	60,0	65332	30,0	17698	428562
TECHNOLOGY														
HIGH	104	4,57	42193	0,74	7,37	3,7	33744	53,7	338348	33,6	36584	22,6	13336	430461
MEDIUM	103	2,90	26736	4,34	15,40	13,4	123300	32,0	202019	9,3	10106	5,4	3201	242062
LOW	77	0,00	0	4,59	37,84	20,4	188377	6,2	39399	2,7	2941	1,4	797	43137
TOTAL ALL	284	4,24	39162	1,27	9,19	5,3	48665	49,8	313765	29,9	32527	20,0	11794	397248

D. *PROJECTIONS ANALYSIS*

The objective of the projections analysis is to examine the implications of alternative growth and change hypothesis on energy use, and correspondingly to examine the implications of energy on development possibilities for the DR economy.

The projections have been grouped into three types, each having a particular methodology and aimed at testing a reasonably similar set of growth and change hypotheses.

1. Agricultural Production and Consumption Trends

The hypotheses examined in this section relate to examining energy requirements at 1978 energy input coefficients, projected to the year 2000 based on three different production and consumption projections. The first of these projections is based on past agricultural production trends projected into the future. Classical least squares methods were used; linear, logrithmic and exponential forms were explored to give the best fit according to the calculation of R^2. In some cases best fit projections were rejected where unusual results were implied; for example, where the projection implied elimination over time of a major crop. Projections include processing.

The second projection involved a consumption model which projected consumption demand for products based on population growth, expected changes in disposable income, and the income elasticity of demand for specific agricultural products. The income elasticities were estimated based on Banco Central household survey data using the following equation:

$$\text{Ln } Y = A + B \text{ Ln } X$$

Where Y is expenditure on the ith commodity

X is the income class

B is the income elasticity of demand for the ith commodity

The third projection is based on extrapolation of past apparent consumption trends.

2. The Impacts of Technological Change in the Food System on Energy Use

The hypotheses tested in this second class of projections involve examination of technological change in production and processing activities. These projections utilize the technological disaggregation preserved in the data when the energy input coefficients were computed. For example, rice production is projected to be shifting over time in the proportions of output produced at the different mechanization and fertilizer technologies. For agricultural processing, the ONE data provide a five year series of energy input coefficients reflecting changes in production technology at widely varying energy input prices (before and after the oil crises of 1974). Trends in quantities of energy used in processing are used to project changes in the base year estimates of fossil energy employed in processing and handling the various major crops and livestock products.

APPENDIX D

TABULATIONS OF BASIC INPUT/OUTPUT DATA FOR MAJOR DOMINICAN REPUBLIC AGRICULTURE PRODUCTS STUDIED

The tables in this Appendix summarize much of the raw survey information which is listed in the separate volume: Energy in the Food System of the Dominican Republic: A Statistical Profile. In this Appendix will be found one table for each of the 19 major crops discussed in the main body of the report. All weights are reported in terms of raw product equivalents no matter what state of the food chain they refer to. Much of the information in the main body of the report can be created from or adapted from the data presented in this Appendix.

The upper part of each table, all values in columns 1-20 and rows 1-19 of each raw product input/output table are in 10^2 metric tons. In the lower part of each table, columns 1-12 and 15, row 20 and all side headings referring to sources are in 10^6 kilocalories.

An explanation of the various table entries follows, using rice for an example.

In column 1 row 1 of the RPO/IT for rice, the number is 36.0. This means that 3,600 metric tons of the total production produced by those in the high technology category went back into production of rice in the form of seed the following year. This information comes from EFSDR, Statistical Profile, Part III, Rice, column 2 row 28. Values in column 2 row 2 and column 3 row 3 of the RPI/OT for rice were determined in the same manner.

Under "Fossil Fuel Energy Requirement 10^3 Kcal/MT" in column 1 is the number 430. This number is taken from EFSDR, Statistical Profile, Part I, Rice, column 14 row 28. The values under the same heading in columns 2 and 3 are obtained in the same way.

Beneath the heading "Total Fuel Requirement by Source (10^6 Kcal): Rice," column 1 row 20, is the number 124863. This number is taken from EFSDR, Statistical Profile, Part V, Rice, column 9 row 28. Note that the energy inputs added together (112624 and 12239), diesel and fertilizer, respectively, equals the total fuel requirement. The fertilizer value of 112624 is found in the previously mentioned source and is determined by adding column 4 row 28, column 6 row 28, and column 8 row 28 of that source. The diesel value is found in column 2 row 28. The same procedure is used to determine the corresponding values for the medium and low level technology farm groups.

As noted in the footnote reference above columns 4, 5, and 6, the quantity of rice which goes from the on-farm production stage to the primary transport stage is that which goes to large and medium storage, off-farm processing, and direct farm marketing. Appropriate values for each technology level are found in columns 8, 10, and 11 of EFSDR, Statistical Profile, Part III, Rice. The total metric tons (258590 in the high technology level) was broken down by transport mode with the aid of Dominican Republic Sector Analysis; Statistical Working Document #5, Marketing. This document gave approximate distances to the market along with the proportions going to the market by way of motorized vehicle, animal, and human.

The value in column 4 under "Fossil Fuel Energy Requirement 10^3 Kcal/Mt" was calculated using this information along with the transportation factor of 830 kcal/ton/km found in "A Preliminary Assessment of Energy Supply and Consumption in the Dominican Republic" by Brookhaven National Laboratory.

The quantities in the primary transport storage phase then go to the processing stage. Note that the summation of the three values in column 5 are equal to the three values in row 5. The Diagnostico Del Sistema de Mercadeo Agricola en Republica Dominicana provides information to determine product losses at various stages. Using this information 220 metric tons was estimated to be lost in the transportation phase (column 19 row 5). Of the remaining 73920 tons, 13 percent went into small scale processing and 87 percent went into large scale processing. Seventy-two percent of the fuel usage used in transport was estimated to be diesel and 28 percent gasoline. Values of 1105 and 430 are found in column 4 in the diesel and gasoline rows reflecting these estimated ratios.

These percentages were used on all crops and were in turn determined by comparing total crop production shown in the Sector Analysis with large scale processing information from the ONE Estadistica Industrial. Fossil Fuel Energy Requirement in solumn 9 was determined comparing energy input and product output from the ONE Estadistica Industrial for the specific crop of rice. To process one metric ton of rice, 71 million kilocalories were used. Of this energy input, 84 percent was diesel, 14 percent was electrical, and 2 percent was for oil and grease. Multiplying the metric tons by the energy input per ton while using the just mentioned percentages, the values of 12664, 302, and 2110 million kilocalories were attained for diesel, oil and grease, and electricity, respectively. Small scale processing values in column 8 were estimated to use 60 percent more energy per unit processed. They were assigned the same proportions of each energy type used in large scale processing.

On-farm marketing and storage values found in column 10 come from EFSDR, Statistical Profile, Part III, Rice, column 6 rows 28-30.

To better understand how values in columns 8 and 9 were derived, it should once again be noted that the sum of values in column 8 (9) is equal to the sum of values in row 8 (9). To get from column 9 rows 4, 5, and 6 to columns 11 and 12 row 9, the following was done:

(1) column 9 values were added together and equal 247370 MT
(2) losses of 740 MT were subtracted from the 247370 MT total
(3) 44 percent of this total went into small scale marketing and storage and 56 percent went into medium and large scale marketing and storage. Numbers corresponding to these percentages are 108510 and 138110 metric tons. (The 44% - 56% division are average values of many products found in the SEA report DSMARD commercialization channels.) The values in columns 11 and 12 row 8 were found the same way.

Columns 11 and 12 row 19 are quantities of rice imported and were divided so that 44 percent enters the small marketing and storage channel and 56 percent the medium and large scale marketing and storage channel.

From PCI's small business energy inventory survey, it was found (considering all products marketed) that 61 thousand kilocalories per ton of product go into the marketing and storage functions. The proportion of each energy type going into the storage and marketing of products is the following: 8% diesel, 5% gasoline, 6% propane, 2% kerosene, 1% oil and grease, and 78% electrical energy. Thus, the total fossil fuel requirement multiplied by the preceding percentages yields the fuel requirement in millions of kilocalories for each fuel source as found at the bottom of the page in columns 11 and 12. The energy input for medium and large scale marketing and storage per ton was estimated at 40% larger than the small scale. The proportion of each energy type going into medium and large scale storage and marketing of products is the following: 14% diesel, 9% gasoline, 5% propane, 1% oil and grease, and 71% electrical energy.

Column 13 rows 1, 2, and 3 come from EFSDR, Statistical Profile, Part III, Rice. The first value (column 3 row 1) is the sum of the values in column 3 row 28, column 9 row 28, and column 7 row 28 of the EFSDR document.

To best understand the value in column 13 row 10, compare row 10 with column 10.

Columns 14 to 17 are product consumption patterns as determined using the four stratas developed in the SEA Plan de Desarrollo Agropecuario 1980-1982. Once again the summation of the values in column 11 (12) are equal to the summation of the values in row 11 (12).

TABLE D-1

RAW PRODUCT INPUT/OUTPUT TABLE FOR RICE (10^2 MT)

Total Energy Input Values for Each Output Stage (10^6 Kcal)

			OUTPUT											
			On-farm Production			Primary Transport Storage			Processing			Marketing and Storage		
			High Tech. (1)	Medium Tech. (2)	Low Tech. (3)	Motor[1/] (4)	Animal[1/] (5)	Human[1/] (6)	On-farm Storage (7)	Small (8)	Med & Large (9)	On-farm (10)	Small (11)	Med & Large (12)
INPUT 1.	Product. Techn.	High	36.0	--	--	1784.3	672.3	129.3	--	--	--	13.4	--	--
2.		Medium	--	8.4	--	161.7	60.9	11.7	--	--	--	45.3	--	--
3.		Low	--	--	3.1	29.9	8.2	1.6	--	--	--	6.6	--	--
4.	Transportation	Motor	--	--	--	--	--	--	--	255.1	1706.9	--	--	--
5.		Animal	--	--	--	--	--	--	--	96.1	643.1	--	--	--
6.		Human	--	--	--	--	--	--	--	18.5	123.7	--	--	--
7.	Processing	On-farm	--	--	--	--	--	--	--	--	--	--	--	--
8.		Small	--	--	--	--	--	--	--	--	--	--	162.2	206.4
9.		Med & Large	--	--	--	--	--	--	--	--	--	--	1085.1	1381.1
10.	Market. & Storage	On-farm	--	--	--	--	--	--	--	--	--	--	--	--
11.		Small	--	--	--	--	--	--	--	--	--	--	--	--
12.		Med & Large	--	--	--	--	--	--	--	--	--	--	--	--
13.	Households	Rural I & II	--	--	--	--	--	--	--	--	--	--	--	--
14.		Strata I	--	--	--	--	--	--	--	--	--	--	--	--
15.		Strata II	--	--	--	--	--	--	--	--	--	--	--	--
16.		Strata III	--	--	--	--	--	--	--	--	--	--	--	--
17.		Strata IV	--	--	--	--	--	--	--	--	--	--	--	--
18.	Imports/Exports		--	--	--	--	--	--	--	--	--	--	91.1	115.9
19.	Losses		--	--	--	--	--	--	--	--	--	--	--	--
			Fossil Fuel Energy Requirement 10^3 Kcal/Mt											
			430	242	43	8	--	--	--	114	71	--	61	84
			Total Fuel Requirement by Source (10^6 Kcal): Rice											
20.	All Sources		124863	9514	431	1535	--	--	--	4208	15076	--	8071	14384
	Percent		70	5	.2	.9	--	--	--	2	9	--	5	8
		Fertilizer	112624	8463	431	--	--	--	--	--	--	--	--	--
		Diesel	12239	1051	--	1105	--	--	--	3282	12664	--	646	2014
		Gasoline	--	--	--	430	--	--	--	--	--	--	404	1295
		Propane	--	--	--	--	--	--	--	--	--	--	484	719
		Fuel Oil	--	--	--	--	--	--	--	--	--	--	--	--
		Kerosene	--	--	--	--	--	--	--	--	--	--	161	--
		Oil & Grease	--	--	--	--	--	--	--	126	302	--	81	144
		Crude Oil	--	--	--	--	--	--	--	--	--	--	--	--
		Electricity	--	--	--	--	--	--	--	800	2110	--	6295	10212
		Charcoal	--	--	--	--	--	--	--	--	--	--	--	--
		Wood	--	--	--	--	--	--	--	--	--	--	--	--

1/ Includes large and medium storage, off-farm processing, and direct farm marketings, all categorized by X-port Mode.

TABLE D-1

CONTINUED FOR RICE

INPUT			OUTPUT							
			Consumption							
			Rural I&II[2/] (13)	Strata I (14)	Strata II (15)	Strata III (16)	Strata IV (17)	Exports (18)	Losses (19)	Inventory (20)
1.	Product. Techn.	High	265.2	--	--	--	--	--	--	--
2.		Medium	105.8	--	--	--	--	--	--	--
3.		Low	31.7	--	--	--	--	--	--	--
4.	Transportation	Motor	--	--	--	--	--	--	5.9	--
5.		Animal	--	--	--	--	--	--	2.2	--
6.		Human	--	--	--	--	--	--	0.4	--
7.	Processing	On-farm	--	--	--	--	--	--	--	--
8.		Small	--	--	--	--	--	--	1.1	--
9.		Med & Large	--	--	--	--	--	--	7.4	--
10.	Market. & Storage	On-farm	63.4	--	--	--	--	--	1.9	--
11.		Small	--	235.5	269.3	591.1	242.5	--	--	--
12.		Med & Large	--	299.8	342.7	752.3	308.6	--	--	--
13.	Households	Rural I & II	--	--	--	--	--	--	--	--
14.		Strata I	--	--	--	--	--	--	--	--
15.		Strata II	--	--	--	--	--	--	--	--
16.		Strata III	--	--	--	--	--	--	--	--
17.		Strata IV	--	--	--	--	--	--	--	--
18.	Imports/Exports		--	--	--	--	--	--	--	--
19.	Losses		--	--	--	--	--	--	--	--
			Fossil Fuel Energy Requirement 10^3 Kcal/Mt							
			--	--	--	--	--	--	--	--

Total Fuel Requirement by Source (10^6 Kcal): Rice

		Total	Percent	Total Percent
20.	All Sources	178082		
	Percent		100	
	Fertilizer	121518	68	
	Diesel	33001	19	
	Gasoline	2195	1	
	Propane	1203	.7	
	Fuel Oil	--	--	
	Kerosene	161	.1	
	Oil & Grease	653	.4	
	Crude Oil	--	--	
	Electricity	19417	11	
	Charcoal	--	--	
	Wood	--	--	

2/ Includes family consumption, rural direct sales and payments in kind.

TABLE D-2

RAW PRODUCT INPUT/OUTPUT TABLE FOR BEANS (10^2 MT)

Total Energy Input Values for Each Output Stage (10^6 Kcal)

INPUT			OUTPUT: On-farm Production			Primary Transport Storage			Processing			Marketing and Storage		
			High Tech. (1)	Medium Tech. (2)	Low Tech. (3)	Motor[1/] (4)	Animal[1/] (5)	Human[1/] (6)	On-farm Storage (7)	Small (8)	Med & Large (9)	On-farm (10)	Small (11)	Med & Large (12)
1.	Product. Techn.	High	6.48	--	--	75.7	44.9	7.7	--	--	--	10.0	--	--
2.		Medium	--	1.26	--	28.4	16.8	2.9	--	--	--	3.3	--	--
3.		Low	--	--	8.53	72.7	43.1	7.4	--	--	--	8.0	--	--
4.	Transportation	Motor	--	--	--	--	--	--	--	--	--	--	77.8	99.0
5.		Animal	--	--	--	--	--	--	--	--	--	--	46.1	58.7
6.		Human	--	--	--	--	--	--	--	--	--	--	7.9	10.1
7.	Processing	On-farm	--	--	--	--	--	--	--	--	--	--	--	--
8.		Small	--	--	--	--	--	--	--	--	--	--	--	--
9.		Med & Large	--	--	--	--	--	--	--	--	--	--	--	--
10.	Market. & Storage	On-farm	--	--	--	--	--	--	--	--	--	--	--	--
11.		Small	--	--	--	--	--	--	--	--	--	--	--	--
12.		Med & Large	--	--	--	--	--	--	--	--	--	--	--	--
13.	Households	Rural I & II	--	--	--	--	--	--	--	--	--	--	--	--
14.		Strata I	--	--	--	--	--	--	--	--	--	--	--	--
15.		Strata II	--	--	--	--	--	--	--	--	--	--	--	--
16.		Strata III	--	--	--	--	--	--	--	--	--	--	--	--
17.		Strata IV	--	--	--	--	--	--	--	--	--	--	--	--
18.	Imports/Exports		--	--	--	--	--	--	--	--	--	--	13.0	16.5
19.	Losses		--	--	--	--	--	--	--	--	--	--	--	--
			Fossil Fuel Energy Requirement 10^3 Kcal/Mt											
			400	159	--	11	--	--	--	--	--	--	61	84
			Total Fuel Requirement by Source (10^6 Kcal): Beans											
20.	All Sources		6122	1018	--	198	--	--	--	--	--	--	799	1420
	Percent		64.0	10.7	--	2.1	--	--	--	--	--	--	8.4	14.8
		Fertilizer	4467	434	--	55	--	--	--	--	--	--	--	--
		Diesel	1655	584	--	143	--	--	--	--	--	--	64.0	199
		Gasoline	--	--	--	--	--	--	--	--	--	--	40.0	128
		Propane	--	--	--	--	--	--	--	--	--	--	48.0	71
		Fuel Oil	--	--	--	--	--	--	--	--	--	--	--	--
		Kerosene	--	--	--	--	--	--	--	--	--	--	160	--
		Oil & Grease	--	--	--	--	--	--	--	--	--	--	8.0	14
		Crude Oil	--	--	--	--	--	--	--	--	--	--	--	--
		Electricity	--	--	--	--	--	--	--	--	--	--	623.0	1008
		Charcoal	--	--	-	--	--	--	--	--	--	--	--	--
		Wood	--	--	--	--	--	--	--	--	--	--	--	--

[1/] Includes large and medium storage, off-farm processing, and direct farm marketings, all categorized by X-port Mode.

TABLE D-2

CONTINUED FOR BEANS

INPUT			OUTPUT							
			Consumption							
			Rural I&II[2/] (13)	Strata I (14)	Strata II (15)	Strata III (16)	Strata IV (17)	Exports (18)	Losses (19)	Inventory (20)
1.	Product. Techn.	High	8.2	--	--	--	--	--	--	--
2.		Medium	11.4	--	--	--	--	--	--	--
3.		Low	58.8	--	--	--	--	--	--	--
4.	Transportation	Motor	--	--	--	--	--	--	--	--
5.		Animal	--	--	--	--	--	--	--	--
6.		Human	--	--	--	--	--	--	--	--
7.	Processing	On-farm	--	--	--	--	--	--	--	--
8.		Small	--	--	--	--	--	--	--	--
9.		Med & Large	--	--	--	--	--	--	--	--
10.	Market. & Storage	On-farm	20.8	--	--	--	--	--	.5	--
11.		Small	--	6.8	10.5	55.6	28.5	--	43.4	--
12.		Med & Large	--	6.8	10.5	66.3	34.0	--	50.3	--
13.	Households	Rural I & II	--	--	--	--	--	--	--	--
14.		Strata I	--	--	--	--	--	--	--	--
15.		Strata II	--	--	--	--	--	--	--	--
16.		Strata III	--	--	--	--	--	--	--	--
17.		Strata IV	--	--	--	--	--	--	--	--
18.	Imports/Exports		--	--	--	--	--	--	--	--
19.	Losses		--	--	--	--	--	--	--	--
			Fossil Fuel Energy Requirement 10^3 Kcal/MT							
			--	--	--	--	--	--	--	--

Total Fuel Requirement by Source (10^6 Kcal): Beans

		Total	Percent	Total Percent
20.	All Sources Percent	9557	100	
	Fertilizer	4956	51.9	
	Diesel	2645	27.7	
	Gasoline	168	1.8	
	Propane	119	1.2	
	Fuel Oil	--	--	
	Kerosene	16	.2	
	Oil & Grease	22	.2	
	Crude Oil	--	--	
	Electricity	1631	17.0	
	Charcoal	--	--	
	Wood	--	---	

[2/] Includes family consumption, rural direct sales and payments in kind.

TABLE D-3

RAW PRODUCT INPUT/OUTPUT TABLE FOR CORN (10^2 MT)

Total Energy Input Values for Each Output Stage (10^5 Kcal)

			OUTPUT											
			On-farm Production			Primary Transport Storage			Processing			Marketing and Storage		
			High Tech. (1)	Medium Tech. (2)	Low Tech. (3)	Motor[1/] (4)	Animal[1/] (5)	Human[1/] (6)	On-farm Storage (7)	Small (8)	Med & Large (9)	On-farm (10)	Small (11)	Med & Large (12)
INPUT														
1.	Product. Techn.	High	5.6	--	--	73.7	42.7	12.9	--	--	--	.1	--	--
2.		Medium	--	19.0	--	93.9	54.4	16.5	--	--	--	2.1	--	--
3.		Low	--	--	53.1	105.1	60.8	18.4	--	--	--	5.2	--	--
4.	Transportation	Motor	--	--	--	--	--	--	--	17.0	113.9	--	62.4	79.4
5.		Animal	--	--	--	--	--	--	--	9.9	65.9	--	36.1	46.0
6.		Human	--	--	--	--	--	--	--	3.0	20.0	--	10.9	13.9
7.	Processing	On-farm	--	--	--	--	--	--	--	--	--	--	--	--
8.		Small	--	--	--	--	--	--	--	--	--	--	13.2	16.7
9.		Med & Large	--	--	--	--	--	--	--	--	--	--	263.6	335.6
10.	Market. & Storage	On-farm	--	--	--	--	--	--	--	--	--	--	--	--
11.		Small	--	--	--	--	--	--	--	--	--	--	--	--
12.		Med & Large	--	--	--	--	--	--	--	--	--	--	--	--
13.	Households	Rural I & II	--	--	--	--	--	--	--	--	--	--	--	--
14.		Strata I	--	--	--	--	--	--	--	--	--	--	--	--
15.		Strata II	--	--	--	--	--	--	--	--	--	--	--	--
16.		Strata III	--	--	--	--	--	--	--	--	--	--	--	--
17.		Strata IV	--	--	--	--	--	--	--	--	--	--	--	--
18.	Imports/Exports		--	--	--	--	--	--	--	--	399.4	--	190.4	242.3
19.	Losses		--	--	--	--	--	--	--	--	--	--	--	--
			Fossil Fuel Energy Requirement 10^3 Kcal/Mt											
			180	50	--	8	--	--	--	121	65	--	61	84
			Total Fuel Requirement by Source (10^6 Kcal): Corn											
20.	All Sources		2593	1052	--	213	--	--	--	361	3876	--	3491	6214
	Percent		14.5	5.9	--	1.2	--	--	--	2.0	21.8	--	19.7	34.9
		Fertilizer	1824	196	--	--	--	--	--	--	--	--	--	--
		Diesel	759	856	--	153	--	--	--	148	2016	--	280	870
		Gasoline	--	--	--	60	--	--	--	--	--	--	175	559
		Propane	--	--	--	--	--	--	--	--	--	--	210	311
		Fuel Oil	--	--	--	--	--	--	--	79	1085	--	--	--
		Kerosene	--	--	--	--	--	--	--	--	--	--	70	--
		Oil & Grease	--	--	--	--	--	--	--	--	--	--	35	62
		Crude Oil	--	--	--	--	--	--	--	--	--	--	--	--
		Electricity	--	--	--	--	--	--	--	134	775	--	2721	4412
		Charcoal	--	--	--	--	--	--	--	-	--	--	--	--
		Wood	--	--	--	--	--	--	--	--	--	--	--	--

[1/] Includes large and medium storage, off-farm processing, and direct farm marketings, all categorized by X-port Mode.

TABLE D-3

CONTINUED FOR CORN

INPUT			OUTPUT							
			Consumption							
			Rural I&II[2/] (13)	Strata I (14)	Strata II (15)	Strata III (16)	Strata IV (17)	Exports (18)	Losses (19)	Inventory (20)
1.	Product. Techn.	High	8.1	--	--	--	--	--	--	--
2.		Medium	24.2	--	--	--	--	--	--	--
3.		Low	63.4	--	--	--	--	--	--	--
4.	Transportation	Motor	--	--	--	--	--	--	--	--
5.		Animal	--	--	--	--	--	--	--	--
6.		Human	--	--	--	--	--	--	--	--
7.	Processing	On-farm	--	--	--	--	--	--	--	--
8.		Small	--	--	--	--	--	--	--	--
9.		Med & Large	--	--	--	--	--	--	--	--
10.	Market. & Storage	On-farm	6.2	--	--	--	--	--	1.2	--
11.		Small	--	1534	93.3	90.6	11.8	--	37.1	--
12.		Med & Large	--	195.3	118.8	115.3	15.0	--	47.2	--
13.	Households	Rural I & II	--	--	--	--	--	--	--	--
14.		Strata I	--	--	--	--	--	--	--	--
15.		Strata II	--	--	--	--	--	--	--	--
16.		Strata III	--	--	--	--	--	--	--	--
17.		Strata IV	--	--	--	--	--	--	--	--
18.	Imports/Exports		--	--	--	--	--	--	--	--
19.	Losses		--	--	--	--	--	--	--	--
			Fossil Fuel Energy Requirement 10^3 Kcal/MT							
			--	--	--	--	--	--	--	--

Total Fuel Requirement by Source (10^6 Kcal): Corn

		Total	Percent	Total Percent
20.	All Sources Percent	17790	100	
	Fertilizer	2020	11.4	
	Diesel	5082	28.6	
	Gasoline	794	4.5	
	Propane	521	2.9	
	Fuel Oil	1164	6.5	
	Kerosene	70	0.4	
	Oil & Grease	97	0.5	
	Crude Oil	--	--	
	Electricity	8042	45.2	
	Charcoal	--	--	
	Wood	--	--	

[2/] Includes family consumption, rural direct sales and payments in kind.

TABLE D-4

RAW PRODUCT INPUT/OUTPUT TABLE FOR PLANTAIN (10^2 MT)

Total Energy Input Values for Each Output Stage (10^6 Kcal)

INPUT			OUTPUT: On-farm Production			Primary Transport Storage			Processing			Marketing and Storage		
			High Tech. (1)	Medium Tech. (2)	Low Tech. (3)	Motor[1/] (4)	Animal[1/] (5)	Human[1/] (6)	On-farm Storage (7)	Small (8)	Med & Large (9)	On-farm (10)	Small (11)	Med & Large (12)
1.	Product. Techn.	High	--	--	--	23.4	16.0	4.8	--	--	--	--	--	--
2.		Medium	--	--	--	130.4	88.6	27.1	--	--	--	--	--	--
3.		Low	--	--	10.8	524.4	356.2	108.8	--	--	--	.3	--	--
4.	Transportation	Motor	--	--	--	--	--	--	--	--	--	--	298.5	379.9
5.		Animal	--	--	--	--	--	--	--	--	--	--	202.7	258.0
6.		Human	--	--	--	--	--	--	--	--	--	--	61.9	78.8
7.	Processing	On-farm	--	--	--	--	--	--	--	--	--	--	--	--
8.		Small	--	--	--	--	--	--	--	--	--	--	--	--
9.		Med & Large	--	--	--	--	--	--	--	--	--	--	--	--
10.	Market. & Storage	On-farm	--	--	--	--	--	--	--	--	--	--	--	--
11.		Small	--	--	--	--	--	--	--	--	--	--	--	--
12.		Med & Large	--	--	--	--	--	--	--	--	--	--	--	--
13.	Households	Rural I & II	--	--	--	--	--	--	--	--	--	--	--	--
14.		Strata I	--	--	--	--	--	--	--	--	--	--	--	--
15.		Strata II	--	--	--	--	--	--	--	--	--	--	--	--
16.		Strata III	--	--	--	--	--	--	--	--	--	--	--	--
17.		Strata IV	--	--	--	--	--	--	--	--	--	--	--	--
18.	Imports/Exports		--	--	--	--	--	--	--	--	--	--	--	--
19.	Losses		--	--	--	--	--	--	--	--	--	--	--	--
			Fossil Fuel Energy Requirement 10^3 Kcal/Mt											
			.2	.1	--	6	--	--	--	--	--	--	61	85
			Total Fuel Requirement by Source (10^6 Kcal): Plantain											
20.	All Sources		1	5	--	377	--	--	--	--	--	--	3416	6069
	Percent		--	0.1	--	3.8	--	--	--	--	--	--	34.6	61.5
		Fertilizer	1	5	--	--	--	--	--	--	--	--	--	--
		Diesel	--	--	--	271	--	--	--	--	--	--	273	850
		Gasoline	--	--	--	106	--	--	--	--	--	--	171	546
		Propane	--	--	--	--	--	--	--	--	--	--	205	303
		Fuel Oil	--	--	--	--	--	--	--	--	--	--	--	--
		Kerosene	--	--	--	--	--	--	--	--	--	--	68	--
		Oil & Grease	--	--	--	--	--	--	--	--	--	--	34	61
		Crude Oil	--	--	--	--	--	--	--	--	--	--	--	--
		Electricity	--	--	--	--	--	--	--	--	--	--	2665	4309
		Charcoal	--	--	--	--	--	--	--	--	-	--	--	--
		Wood	--	--	--	--	--	--	--	--	--	--	--	--

[1/] Includes large and medium storage, off-farm processing, and direct farm marketings, all categorized by X-port Mode.

TABLE D-4

CONTINUED FOR PLANTAIN

INPUT			OUTPUT							
			Consumption							
			Rural I&II[2/] (13)	Strata I (14)	Strata II (15)	Strata III (16)	Strata IV (17)	Exports (18)	Losses (19)	Inventory (20)
1.	Product. Techn.	High	6.8	--	--	--	--	--	--	--
2.		Medium	145.9	--	--	--	--	--	12.3	--
3.		Low	1111.8	--	--	--	--	--	33.6	--
4.	Transportation	Motor	--	--	--	--	--	--	--	--
5.		Animal	--	--	--	--	--	--	--	--
6.		Human	--	--	--	--	--	--	--	--
7.	Processing	On-farm	--	--	--	--	--	--	--	--
8.		Small	--	--	--	--	--	--	--	--
9.		Med & Large	--	--	--	--	--	--	--	--
10.	Market. & Storage	On-farm	.2	--	--	--	--	--	--	--
11.		Small	--	43.1	56.9	119.8	287.0	--	56.3	--
12.		Med & Large	--	54.9	72.4	150.5	3653	--	71.7	--
13.	Households	Rural I & II	--	--	--	--	--	--	--	--
14.		Strata I	--	--	--	--	--	--	--	--
15.		Strata II	--	--	--	--	--	--	--	--
16.		Strata III	--	--	--	--	--	--	--	--
17.		Strata IV	--	--	--	--	--	--	--	--
18.	Imports/Exports		--	--	--	--	--	--	--	--
19.	Losses		--	--	--	--	--	--	--	--
			Fossil Fuel Energy Requirement 10^3 Kcal/MT							
			--	--	--	--	--	--	--	--

Total Fuel Requirement by Source (10^6 Kcal): Plantain

		Total	Percent	Total Percent
20.	All Sources Percent	9868	100	
	Fertilizer	6	.1	
	Diesel	1394	14.1	
	Gasoline	823	8.3	
	Propane	508	5.1	
	Fuel Oil	--	--	
	Kerosene	68	0.7	
	Oil & Grease	95	1.0	
	Crude Oil	--	--	
	Electricity	6974	70.7	
	Charcoal	--	--	
	Wood	--	--	

[2/] Includes family consumption, rural direct sales and payments in kind.

TABLE D-5

RAW PRODUCT INPUT/OUTPUT TABLE FOR CASSAVA (YUCA) (10^2 MT)

Total Energy Input Values for Each Output Stage (10^6 Kcal)

			OUTPUT											
			On-farm Production			Primary Transport Storage			Processing			Marketing and Storage		
			High Tech. (1)	Medium Tech. (2)	Low Tech. (3)	Motor[1/] (4)	Animal[1/] (5)	Human[1/] (6)	On-farm Storage (7)	Small (8)	Med & Large (9)	On-farm (10)	Small (11)	Med & Large (12)
INPUT 1.	Product. Techn.	High	.6	--	--	146.8	116.9	36.0	--	--	--	--	--	--
2.		Medium	--	9.5	--	175.2	139.5	42.9	--	--	--	.6	--	--
3.		Low	--	--	24.4	216.7	172.5	53.1	--	--	--	5.2	--	--
4.	Transportation	Motor	--	--	--	--	--	--	--	--	--	--	237.0	301.7
5.		Animal	--	--	--	--	--	--	--	--	--	--	188.7	240.2
6.		Human	--	--	--	--	--	--	--	--	--	--	59.1	73.9
7.	Processing	On-farm	--	--	--	--	--	--	--	--	--	--	--	--
8.		Small	--	--	--	--	--	--	--	--	--	--	--	--
9.		Med & Large	--	--	--	--	--	--	--	--	--	--	--	--
10.	Market. & Storage	On-farm	--	--	--	--	--	--	--	--	--	--	--	--
11.		Small	--	--	--	--	--	--	--	--	--	--	--	--
12.		Med & Large	--	--	--	--	--	--	--	--	--	--	--	--
13.	Households	Rural I & II	--	--	--	--	--	--	--	--	--	--	--	--
14.		Strata I	--	--	--	--	--	--	--	--	--	--	--	--
15.		Strata II	--	--	--	--	--	--	--	--	--	--	--	--
16.		Strata III	--	--	--	--	--	--	--	--	--	--	--	--
17.		Strata IV	--	--	--	--	--	--	--	--	--	--	--	--
18.	Imports/Exports		--	--	--	--	--	--	--	--	--	--	--	--
19.	Losses		--	--	--	--	--	--	--	--	--	--	--	--
			Fossil Fuel Energy Requirement 10^3 Kcal/Mt											
			28	24	--	7	--	--	--	--	--	--	61	85
			Total Fuel Requirement by Source (10^6 Kcal): Cassava (Yuca)											
20.	All Sources		940	1291	--	358	--	--	--	--	--	--	2934	5214
	Percent		8.8	12.0	--	3.3	--	--	--	--	--	--	27.3	48.6
		Fertilizer	455	194	--	--	--	--	--	--	--	--	--	--
		Diesel	485	1097	--	258	--	--	--	--	--	--	235	730
		Gasoline	--	--	--	100	--	--	--	--	--	--	147	469
		Propane	--	--	--	--	--	--	--	--	--	--	176	261
		Fuel Oil	--	--	--	--	--	--	--	--	--	--	--	--
		Kerosene	--	--	--	--	--	--	--	-	--	--	59	--
		Oil & Grease	--	--	--	--	--	--	--	--	--	--	29	52
		Crude Oil	--	--	--	--	--	--	--	--	--	--	--	--
		Electricity	--	--	--	--	--	--	--	--	--	--	2288	3702
		Charcoal	--	--	--	--	--	--	--	--	--	--	--	--
		Wood	--	--	--	--	--	--	--	--	--	--	--	--

1/ Includes large and medium storage, off-farm processing, and direct farm marketings, all categorized by X-port Mode.

TABLE D-5

CONTINUED FOR CASSAVA (YUCA)

INPUT			OUTPUT Consumption							
			Rural I&II[2/] (13)	Strata I (14)	Strata II (15)	Strata III (16)	Strata IV (17)	Exports (18)	Losses (19)	Inventory (20)
1.	Product. Techn.	High	38.4	--	--	--	--	--	--	--
2.		Medium	161.4	--	--	--	--	--	7.6	--
3.		Low	499.0	--	--	--	--	--	5.8	--
4.	Transportation	Motor	--	--	--	--	--	--	--	--
5.		Animal	--	--	--	--	--	--	--	--
6.		Human	--	--	--	--	--	--	--	--
7.	Processing	On-farm	--	--	--	--	--	--	--	--
8.		Small	--	--	--	--	--	--	--	--
9.		Med & Large	--	--	--	--	--	--	--	--
10.	Market. & Storage	On-farm	3.8	--	--	--	--	--	1.4	--
11.		Small	--	35.4	26.9	215.1	65.2	25.1	116.1	--
12.		Med & Large	--	45.1	34.3	273.8	83.0	31.9	147.8	--
13.	Households	Rural I & II	--	--	--	--	--	--	--	--
14.		Strata I	--	--	--	--	--	--	--	--
15.		Strata II	--	--	--	--	--	--	--	--
16.		Strata III	--	--	--	--	--	--	--	--
17.		Strata IV	--	--	--	--	--	--	--	--
18.	Imports/Exports		--	--	--	--	--	--	--	--
19.	Losses		--	--	--	--	--	--	--	--
			Fossil Fuel Energy Requirement 10^3 Kcal/MT							
			--	--	--	--	--	--	--	--

Total Fuel Requirement by Source (10^6 Kcal): Cassava (Yuca)

		Total	Percent	Total Percent
20.	All Sources	10737	100	
	Fertilizer	649	6.0	
	Diesel	2805	26.1	
	Gasoline	716	6.7	
	Propane	437	4.1	
	Fuel Oil	--	--	
	Kerosene	59	0.5	
	Oil & Grease	81	0.8	
	Crude Oil	--	--	
	Electricity	4990	55.8	
	Charcoal	--	--	
	Wood	--	--	

[2/] Includes family consumption, rural direct sales and payments in kind.

TABLE D-5

RAW PRODUCT INPUT/OUTPUT TABLE FOR BANANA (10^2 MT)

Total Energy Input Values for Each Output Stage (10^6 Kcal)

			OUTPUT											
			On-farm Production			Primary Transport Storage			Processing			Marketing and Storage		
			High Tech. (1)	Medium Tech. (2)	Low Tech. (3)	Motor[1/] (4)	Animal[1/] (5)	Human[1/] (6)	On-farm Storage (7)	Small (8)	Med & Large (9)	On-farm (10)	Small (11)	Med & Large (12)
INPUT 1.	Product. Techn.	High	--	--	--	56.8	37.8	10.8	--	--	--	--	--	--
2.		Medium	--	--	--	970.3	659.5	200.0	--	--	--	--	--	--
3.		Low	--	--	--	--	--	--	--	--	--	--	--	--
4.	Transportation	Motor	--	--	--	--	--	--	--	.3	1.9	--	450.9	574.0
5.		Animal	--	--	--	--	--	--	--	.2	1.3	--	306.1	389.6
6.		Human	--	--	--	--	--	--	--	.1	.4	--	117.8	92.5
7.	Processing	On-farm	--	--	--	--	--	--	--	--	--	--	1.0	1.2
8.		Small	--	--	--	--	--	--	--	--	--	--	0.7	0.8
9.		Med & Large	--	--	--	--	--	--	--	--	--	--	0.2	0.3
10.	Market. & Storage	On-farm	--	--	--	--	--	--	--	--	--	--	--	--
11.		Small	--	--	--	--	--	--	--	--	--	--	--	--
12.		Med & Large	--	--	--	--	--	--	--	--	--	--	--	--
13.	Households	Rural I & II	--	--	--	--	--	--	--	--	--	--	--	--
14.		Strata I	--	--	--	--	--	--	--	--	--	--	--	--
15.		Strata II	--	--	--	--	--	--	--	--	--	--	--	--
16.		Strata III	--	--	--	--	--	--	--	--	--	--	--	--
17.		Strata IV	--	--	--	--	--	--	--	--	--	--	--	--
18.	Imports/Exports		--	--	--	--	--	--	--	--	--	--	--	--
19.	Losses		--	--	--	--	--	--	--	--	--	--	--	--
			Fossil Fuel Energy Requirement 10^3 Kcal/Mt											
			--	--	--	6	--	--	--	801	445	--	61	85
			Total Fuel Requirement by Source (10^6 Kcal): Banana											
20.	All Sources		--	--	--	570	--	--	--	48	161	--	5317	8962
	Percent		--	--	--	3.8	--	--	--	0.3	1.1	--	35.3	59.5
		Fertilizer	--	--	--	--	--	--	--	--	--	--	--	--
		Diesel	--	--	--	410	--	--	--	29	140	--	425	1255
		Gasoline	--	--	--	160	--	--	--	--	--	--	266	807
		Propane	--	--	--	--	--	--	--	--	--	--	319	448
		Fuel Oil	--	--	--	--	--	--	--	--	--	--	--	--
		Kerosene	--	--	--	--	--	--	--	--	--	--	106	--
		Oil & Grease	--	--	--	--	--	--	--	--	--	--	53	90
		Crude Oil	--	--	--	--	--	--	--	--	--	--	--	--
		Electricity	--	--	--	--	--	--	--	19	21	--	4148	6362
		Charcoal	--	--	--	--	--	--	--	--	--	--	--	--
		Wood	--	--	--	--	--	--	--	--	--	--	--	--

[1/] Includes large and medium storage, off-farm processing, and direct farm marketings, all categorized by X-port Mode.

TABLE D-6

CONTINUED FOR BANANA

INPUT			OUTPUT							
			Consumption							
			Rural I&II[2/] (13)	Strata I (14)	Strata II (15)	Strata III (16)	Strata IV (17)	Exports (18)	Losses (19)	Inventory (20)
1.	Product. Techn.	High	56.8	--	--	--	--	--	--	--
2.		Medium	1735.1	--	--	--	--	--	32.4	--
3.		Low	--	--	--	--	--	--	--	--
4.	Transportation	Motor	--	--	--	--	--	--	--	--
5.		Animal	--	--	--	--	--	--	--	--
6.		Human	--	--	--	--	--	--	--	--
7.	Processing	On-farm	--	--	--	--	--	--	--	--
8.		Small	--	--	--	--	--	--	--	--
9.		Med & Large	--	--	--	--	--	--	--	--
10.	Market. & Storage	On-farm	--	--	--	--	--	--	--	--
11.		Small	--	71.0	94.7	1974	425.9	--	87.7	--
12.		Med & Large	--	85.7	114.3	238.3	514.2	--	105.8	--
13.	Households	Rural I & II	--	--	--	--	--	--	--	--
14.		Strata I	--	--	--	--	--	--	--	--
15.		Strata II	--	--	--	--	--	--	--	--
16.		Strata III	--	--	--	--	--	--	--	--
17.		Strata IV	--	--	--	--	--	--	--	--
18.	Imports/Exports		--	--	--	--	--	--	--	--
19.	Losses		--	--	--	--	--	--	--	--
			Fossil Fuel Energy Requirement 10^3 Kcal/MT							
			--	--	--	--	--	--	--	--

Total Fuel Requirement by Source (10^6 Kcal): Banana

		Total	Percent	Total Percent
20.	All Sources	15058		
	Percent		100	
	Fertilizer	--	--	
	Diesel	2259	15.0	
	Gasoline	1233	8.2	
	Propane	767	5.1	
	Fuel Oil	--	--	
	Kerosene	106	0.7	
	Oil & Grease	143	0.9	
	Crude Oil	--	--	
	Electricity	10550	70.1	
	Charcoal	--	--	
	Wood	--	--	

2/ Includes family consumption, rural direct sales and payments in kind.

TABLE D-7

RAW PRODUCT INPUT/OUTPUT TABLE FOR SUGAR CANE (10^2 MT)

Total Energy Input Values for Each Output Stage (10^6 Kcal)

INPUT			OUTPUT: On-farm Production			Primary Transport Storage			Processing			Marketing and Storage		
			High Tech. (1)	Medium Tech. (2)	Low Tech. (3)	Motor[1/] (4)	Animal[1/] (5)	Human[1/] (6)	On-farm Storage (7)	Small (8)	Med & Large (9)	On-farm (10)	Small (11)	Med & Large (12)
1.	Product. Techn.	High	--	--	--	24750.5	10607.3	--	--	--	--	--	--	--
2.		Medium	--	--	--	35252.4	15108.2	--	--	--	--	--	--	--
3.		Low	--	--	199.2	15645.3	6705.1	--	2427.4	--	--	--	--	--
4.	Transportation	Motor	--	--	--	--	--	--	--	9804.8	65616.5	--	--	--
5.		Animal	--	--	--	--	--	--	--	4202.0	28121.3	--	--	--
6.		Human	--	--	--	--	--	--	--	--	--	--	--	--
7.	Processing	On-farm	--	--	--	--	--	--	--	--	--	--	363.0	2057.1
8.		Small	--	--	--	--	--	--	--	--	--	--	2094.7	11870.1
9.		Med & Large	--	--	--	--	--	--	--	--	--	--	14018.5	79438.1
10.	Market. & Storage	On-farm	--	--	--	--	--	--	--	--	--	--	--	--
11.		Small	--	--	--	--	--	--	--	--	--	--	--	--
12.		Med & Large	--	--	--	--	--	--	--	--	--	--	--	--
13.	Households	Rural I & II	--	--	--	--	--	--	--	--	--	--	--	--
14.		Strata I	--	--	--	--	--	--	--	--	--	--	--	--
15.		Strata II	--	--	--	--	--	--	--	--	--	--	--	--
16.		Strata III	--	--	--	--	--	--	--	--	--	--	--	--
17.		Strata IV	--	--	--	--	--	--	--	--	--	--	--	--
18.	Imports/Exports		--	--	--	--	--	--	--	--	--	--	--	--
19.	Losses		--	--	--	--	--	--	--	--	--	--	--	--
			Fossil Fuel Energy Requirement 10^3 Kcal/Mt											
			29	15	7	11	--	--	231	231	129	--	61	85
			Total Fuel Requirement by Source (10^6 Kcal): Sugar Cane											
20.	All Sources		101539	73917	17355	81623	--	--	55973	322982	1206190	--	210974	1669026
	Percent		2.7	2.0	0.5	2.2	--	--	1.5	8.6	32.3	--	5.6	44.6
		Fertilizer	92388	70168	17355	--	--	--	--	--	--	--	--	--
		Diesel	9151	3749	--	58769	--	--	20710	119503	603095	--	16878	233663
		Gasoline	--	--	--	22854	--	--	1119	6460	36186	--	10549	150212
		Propane	--	--	--	--	--	--	--	--	--	--	12658	83451
		Fuel Oil	--	--	--	--	--	--	--	--	--	--	--	--
		Kerosene	--	--	--	--	--	--	--	--	--	--	4219	--
		Oil & Grease	--	--	--	--	--	--	560	3230	12062	--	2110	16690
		Crude Oil	--	--	--	--	--	--	--	--	84433	--	--	--
		Electricity	--	--	--	--	--	--	7836	45217	60309	--	164560	1885000
		Charcoal	--	--	--	--	--	--	--	--	--	--	--	--
		Wood	--	--	--	--	--	--	1119	6460	12062	--	--	--
		Bagasse	--	--	--	--	--	--	24629	142112	398043	--	--	--

1/ Includes large and medium storage, off-farm processing, and direct farm marketings, all categorized by X-port Mode.

TABLE D-7

CONTINUED FOR SUGAR CANE

INPUT			OUTPUT Consumption Rural I&II[2/] (13)	Strata I (14)	Strata II (15)	Strata III (16)	Strata IV (17)	Exports (18)	Losses (19)	Inventory (20)
1.	Product. Techn.	High	5518.0	--	--	--	--	--	236.8	--
2.		Medium	10751.8	--	--	--	--	--	--	--
3.		Low	4.2	--	--	--	--	--	--	--
4.	Transportation	Motor	--	--	--	--	--	--	226.9	--
5.		Animal	--	--	--	--	--	--	97.3	--
6.		Human	--	--	--	--	--	--	--	--
7.	Processing	On-farm	--	--	--	--	--	--	7.3	--
8.		Small	--	--	--	--	--	--	42.0	--
9.		Med & Large	--	--	--	--	--	--	281.2	--
10.	Market. & Storage	On-farm	--	--	--	--	--	--	--	--
11.		Small	--	702.1	2722.3	5960.6	7091.2	--	--	--
12.		Med & Large	--	893.6	3464.7	7586.2	9025.2	72471.0	--	--
13.	Households	Rural I & II	--	--	--	--	--	--	--	--
14.		Strata I	--	--	--	--	--	--	--	--
15.		Strata II	--	--	--	--	--	--	--	--
16.		Strata III	--	--	--	--	--	--	--	--
17.		Strata IV	--	--	--	--	--	--	--	--
18.	Imports/Exports		--	--	--	--	--	--	--	--
19.	Losses		--	--	--	--	--	--	--	--
			Fossil Fuel Energy Requirement 10^3 Kcal/MT							
			--	--	--	--	--	--	--	--

Total Fuel Requirement by Source (10^6 Kcal): Sugar Cane

		Total	Percent	Total Percent
20.	All Sources Percent	3739579	100	
	Fertilizer	179911	4.8	
	Diesel	1065518	28.5	
	Gasoline	227380	6.1	
	Propane	96109	2.6	
	Fuel Oil	--	--	
	Kerosene	4219	0.1	
	Oil & Grease	34652	0.9	
	Crude Oil	84433	2.3	
	Electricity	1462930	39.1	
	Charcoal	--	--	
	Wood	19641	0.5	
	Begasse	564784	15.1	

[2/] Includes family consumption, rural direct sales and payments in kind.

TABLE D-8

RAW PRODUCT INPUT/OUTPUT TABLE FOR TOBACCO (10^2 MT)

Total Energy Input Values for Each Output Stage (10^6 Kcal)

INPUT			OUTPUT: On-farm Production			Primary Transport Storage			Processing			Marketing and Storage		
			High Tech. (1)	Medium Tech. (2)	Low Tech. (3)	Motor[1/] (4)	Animal[1/] (5)	Human[1/] (6)	On-farm Storage (7)	Small (8)	Med & Large (9)	On-farm (10)	Small (11)	Med & Large (12)
1.	Product. Techn.	High	--	--	--	92.3	48.4	10.6	--	--	--	--	--	--
2.		Medium	--	--	--	62.0	32.5	7.1	--	--	--	--	--	--
3.		Low	--	--	--	86.3	45.3	9.9	--	--	--	3.8	--	--
4.	Transportation	Motor	--	--	--	--	--	--	--	2.0	11.2	--	--	210.4
5.		Animal	--	--	--	--	--	--	--	1.0	5.9	--	--	110.5
6.		Human	--	--	--	--	--	--	--	0.2	1.3	--	--	26.6
7.	Processing	On-farm	--	--	--	--	--	--	--	--	--	--	--	--
8.		Small	--	--	--	--	--	--	--	--	--	--	1.4	1.8
9.		Med & Large	--	--	--	--	--	--	--	--	--	--	8.1	10.2
10.	Market. & Storage	On-farm	--	--	--	--	--	--	--	--	--	--	--	--
11.		Small	--	--	--	--	--	--	--	--	--	--	--	--
12.		Med & Large	--	--	--	--	--	--	--	--	--	--	--	--
13.	Households	Rural I & II	--	--	--	--	--	--	--	--	--	--	--	--
14.		Strata I	--	--	--	--	--	--	--	--	--	--	--	--
15.		Strata II	--	--	--	--	--	--	--	--	--	--	--	--
16.		Strata III	--	--	--	--	--	--	--	--	--	--	--	--
17.		Strata IV	--	--	--	--	--	--	--	--	--	--	--	--
18.	Imports/Exports		--	--	--	--	--	--	--	--	--	--		
19.	Losses		--	--	--	--	--	--	--	--	--	--	--	--
			Fossil Fuel Energy Requirement 10^3 Kcal/Mt											
			416	244	--	10	--	--	--	7810	4182	--	61	85
			Total Fuel Requirement by Source (10^6 Kcal): Tobacco											
20.	All Sources		9659	3561	--	236	--	--	--	2499	7695	--	58	3044
	Percent		36.1	13.3	--	0.9	--	--	--	9.3	28.8	--	0.2	11.4
		Fertilizer	8552	2126	--	--	--	--	--	--	--	--	--	--
		Diesel	1107	1435	--	170	--	--	--	1049	2462	--	5	426
		Gasoline	--	--	--	66	--	--	--	--	--	--	3	274
		Propane	--	--	--	--	--	--	--	--	--	--	3	152
		Fuel Oil	--	--	--	--	--	--	--	800	2308	--	--	--
		Kerosene	--	--	--	--	--	--	--	--	--	--	1	--
		Oil & Grease	--	--	--	--	--	--	---	--	--	--	1	30
		Crude Oil	--	--	--	--	--	--	--	--	--	--	--	--
		Electricity	--	--	--	--	--	--	--	650	2925	--	45	2162
		Charcoal	--	--	--	--	--	--	--	-	--	--	--	--
		Wood	--	--	--	--	--	--	--	--	--	--	--	--

1/ Includes large and medium storage, off-farm processing, and direct farm marketings, all categorized by X-port Mode.

TABLE D-8

CONTINUED FOR TOBACCO

INPUT			OUTPUT							
			Consumption							
			Rural I&II[2/] (13)	Strata I (14)	Strata II (15)	Strata III (16)	Strata IV (17)	Exports (18)	Losses (19)	Inventory (20)
1.	Product. Techn.	High	14.6	--	--	--	--	66.5	--	--
2.		Medium	32.7	--	--	--	--	11.5	--	--
3.		Low	17.5	--	--	--	--	--	--	--
4.	Transportation	Motor	--	--	--	--	--	--	--	--
5.		Animal	--	--	--	--	--	--	--	--
6.		Human	--	--	--	--	--	--	.7	--
7.	Processing	On-farm	--	--	--	--	--	--	.3	--
8.		Small	--	--	--	--	--	--	.1	--
9.		Med & Large	--	--	--	--	--	--	--	--
10.	Market. & Storage	On-farm	3.6	--	--	--	--	--	--	--
11.		Small	--	2.2	1.8	2.8	2.7	--	.2	--
12.		Med & Large	--	2.8	2.3	3.6	3.4	346.0	.1	--
13.	Households	Rural I & II	--	--	--	--	--	--	1.0	--
14.		Strata I	--	--	--	--	--	--	--	--
15.		Strata II	--	--	--	--	--	--	--	--
16.		Strata III	--	--	--	--	--	--	--	--
17.		Strata IV	--	--	--	--	--	--	--	--
18.	Imports/Exports		--	--	--	--	--	--	--	--
19.	Losses		--	--	--	--	--	--	--	--
			Fossil Fuel Energy Requirement 10^3 Kcal/MT							
			--	--	--	--	--	--	--	--

Total Fuel Requirement by Source (10^6 Kcal): Tobacco

		Total	Percent	Total Percent
20.	All Sources	26752		
	Percent		100	
	Fertilizer	10678	39.9	
	Diesel	6654	24.9	
	Gasoline	343	1.3	
	Propane	155	0.6	
	Fuel Oil	3108	11.6	
	Kerosene	1	--	
	Oil & Grease	31	0.1	
	Crude Oil	--	--	
	Electricity	5782	21.6	
	Charcoal	--	--	
	Wood	--	--	

2/ Includes family consumption, rural direct sales and payments in kind.

TABLE D-9

RAW PRODUCT INPUT/OUTPUT TABLE FOR COCOA (10^2 MT)

Total Energy Input Values for Each Output Stage (10^6 Kcal)

INPUT		OUTPUT: On-farm Production			Primary Transport Storage			Processing			Marketing and Storage		
		High Tech. (1)	Medium Tech. (2)	Low Tech. (3)	Motor[1/] (4)	Animal[1/] (5)	Human[1/] (6)	On-farm Storage (7)	Small (8)	Med & Large (9)	On-farm (10)	Small (11)	Med & Large (12)
1. Product. Techn.	High	--	--	--	--	--	--	--	--	--	--	--	--
2.	Medium	--	--	--	--	--	--	25.6	--	--	--	--	--
3.	Low	--	--	--	--	--	--	342.0	--	--	.1	--	--
4. Transportation	Motor	--	--	--	--	--	--	--	--	--	--	--	--
5.	Animal	--	--	--	--	--	--	--	--	--	--	--	--
6.	Human	--	--	--	--	--	--	--	--	--	--	--	--
7. Processing	On-farm	--	--	--	--	--	--	--	1.5	10.0	--	--	304.7
8.	Small	--	--	--	--	--	--	--	--	--	--	0.7	0.8
9.	Med & Large	--	--	--	--	--	--	--	--	--	--	4.4	5.6
10. Market. & Storage	On-farm	--	--	--	--	--	--	--	--	--	--	--	--
11.	Small	--	--	--	--	--	--	--	--	--	--	--	--
12.	Med & Large	--	--	--	--	--	--	--	--	--	--	--	--
13. Households	Rural I & II	--	--	--	--	--	--	--	--	--	--	--	--
14.	Strata I	--	--	--	--	--	--	--	--	--	--	--	--
15.	Strata II	--	--	--	--	--	--	--	--	--	--	--	--
16.	Strata III	--	--	--	--	--	--	--	--	--	--	--	--
17.	Strata IV	--	--	--	--	--	--	--	--	--	--	--	--
18. Imports/Exports		--	--	--	--	--	--	--	--	--	--	--	--
19. Losses		--	--	--	--	--	--	--	--	--	--	--	--
		Fossil Fuel Energy Requirement 10^3 Kcal/Mt											
		--	390	--	--	--	--	--	3447	6434	--	61	85
		Total Fuel Requirement by Source (10^6 Kcal): Cocoa											
20. All Sources		--	790	--	--	--	--	--	965	3445	--	31	2634
Percent		--	10.0	--	--	--	--	--	12.3	43.8	--	.4	33.5
	Fertilizer	--	790	--	--	--	--	--	--	--	--	--	--
	Diesel	--	--	---	--	--	--	--	--	--	--	2	369
	Gasoline	--	--	--	--	--	--	--	--	--	--	2	236
	Propane	--	--	--	--	--	--	--	--	--	--	2	132
	Fuel Oil	--	--	--	--	--	--	--	530	2687	--	--	--
	Kerosene	--	--	--	--	--	--	--	--	--	--	1	--
	Oil & Grease	--	--	--	--	--	--	--	--	--	--	--	26
	Crude Oil	--	--	--	--	--	--	--	--	--	--	--	--
	Electricity	--	--	--	--	--	--	--	435	758	--	24	1871
	Charcoal	--	--	--	--	--	--	--	--	--	--	--	--
	Wood	--	--	--	--	--	--	--	--	--	--	--	--

[1/] Includes large and medium storage, off-farm processing, and direct farm marketings, all categorized by X-port Mode.

TABLE D-9

CONTINUED FOR COCOA

INPUT			OUTPUT: Consumption							
			Rural I&II[2/] (13)	Strata I (14)	Strata II (15)	Strata III (16)	Strata IV (17)	Exports (18)	Losses (19)	Inventory (20)
1.	Product. Techn.	High	--	--	--	--	--	--	--	--
2.		Medium	--	--	--	--	--	--	--	--
3.		Low	.4	--	--	--	--	--	.3	--
4.	Transportation	Motor	--	--	--	--	--	--	--	--
5.		Animal	--	--	--	--	--	--	--	--
6.		Human	--	--	--	--	--	--	--	--
7.	Processing	On-farm	--	--	--	--	--	--	--	--
8.		Small	--	--	--	--	--	--	--	--
9.		Med & Large	--	--	--	--	--	--	--	--
10.	Market. & Storage	On-farm	.1	--	--	--	--	--	--	--
11.		Small	--	.3	.9	2.3	1.6	--	--	--
12.		Med & Large	--	.4	1.0	2.9	2.0	3035	1.1	--
13.	Households	Rural I & II	--	--	--	--	--	--	--	--
14.		Strata I	--	--	--	--	--	--	--	--
15.		Strata II	--	--	--	--	--	--	--	--
16.		Strata III	--	--	--	--	--	--	--	--
17.		Strata IV	--	--	--	--	--	--	--	--
18.	Imports/Exports		--	--	--	--	--	--	--	--
19.	Losses		--	--	--	--	--	--	--	--
			Fossil Fuel Energy Requirement 10^3 Kcal/MT							
			--	--	--	--	--	--	--	--

Total Fuel Requirement by Source (10^6 Kcal): Cocoa

		Total	Percent	Total Percent
20.	All Sources	7865		
	Percent		100	
	Fertilizer	790	10.0	
	Diesel	371	4.7	
	Gasoline	238	3.0	
	Propane	134	1.7	
	Fuel Oil	3217	40.9	
	Kerosene	1	--	
	Oil & Grease	26	0.5	
	Crude Oil	--	--	
	Electricity	3088	39.4	
	Charcoal	--	--	
	Wood	--	--	

[2/] Includes family consumption, rural direct sales and payments in kind.

TABLE D-10

RAW PRODUCT INPUT/OUTPUT TABLE FOR COFFEE (10^2 MT)

Total Energy Output Values for Each Output Stage (10^6 Kcal)

			OUTPUT											
			On-farm Production			Primary Transport Storage			Processing			Marketing and Storage		
			High Tech. (1)	Medium Tech. (2)	Low Tech. (3)	Motor[1/] (4)	Animal[1/] (5)	Human[1/] (6)	On-farm Storage (7)	Small (8)	Med & Large (9)	On-farm (10)	Small (11)	Med & Large (12)
INPUT														
1.	Product. Techn.	High	--	--	--	--	--	--	--	--	--	--	--	--
2.		Medium	--	--	--	4.1	3.0	1.4	104.6	--	--	--	--	--
3.		Low	--	--	--	132.1	94.3	43.1	449.1	--	--	2.8	--	--
4.	Transportation	Motor	--	--	--	--	--	--	--	17.7	118.1	--	--	--
5.		Animal	--	--	--	--	--	--	--	12.6	84.4	--	--	--
6.		Human	--	--	--	--	--	--	--	5.8	38.6	--	--	--
7.	Processing	On-farm	--	--	--	--	--	--	--	--	--	--	115.9	436.1
8.		Small	--	--	--	--	--	--	--	--	--	--	7.6	28.4
9.		Med & Large	--	--	--	--	--	--	--	--	--	--	50.5	189.9
10.	Market. & Storage	On-farm	--	--	--	--	--	--	--	--	--	--	--	--
11.		Small	--	--	--	--	--	--	--	--	--	--	--	--
12.		Med & Large	--	--	--	--	--	--	--	--	--	--	--	--
13.	Households	Rural I & II	--	--	--	--	--	--	--	--	--	--	--	--
14.		Strata I	--	--	--	--	--	--	--	--	--	--	--	--
15.		Strata II	--	--	--	--	--	--	--	--	--	--	--	--
16.		Strata III	--	--	--	--	--	--	--	--	--	--	--	--
17.		Strata IV	--	--	--	--	--	--	--	--	--	--	--	--
18.	Imports/Exports		--	--	--	--	--	--	--	--	--	--	--	--
19.	Losses		--	--	--	--	--	--	--	--	--	--	--	--
			Fossil Fuel Energy Requirement 10^3 Kcal/Mt											
			--	344	12	.11	--	--	880	880	471	--	60652	84674
			Total Fuel Requirement by Source (10^6 Kcal): Coffee											
20.	All Sources		--	3957	916	147	--	--	48715	3176	11359	--	1055	5541
	Percent		--	5.3	1.2	0.2	--	--	65.1	4.2	15.2	--	1.4	7.4
		Fertilizer	--	3957	916	--	--	--	--	--	--	--	--	--
		Diesel	--	--	--	106	--	--	4872	318	2158	--	84	776
		Gasoline	--	--	--	41	--	--	--	--	--	--	53	499
		Propane	--	--	--	--	--	--	--	--	--	--	63	277
		Fuel Oil	--	--	--	--	--	--	--	--	--	--	--	--
		Kerosene	-	--	--	--	--	--	--	--	--	--	21	--
		Oil & Grease	--	--	--	--	--	--	487	32	114	--	--	--
		Crude Oil	--	--	--	--	--	--	--	--	--	--	11	56
		Electricity	--	--	--	--	--	--	1461	95	454	--	823	3933
		Charcoal	--	--	---	--	--	--	--	--	--	--	--	--
		Wood	--	--	--	--	--	--	41895	2731	8633	--	--	--

[1/] Includes large and medium storage, off-farm processing, and direct farm marketings, all categorized by X-port Mode.

TABLE D-10

CONTINUED FOR COFFEE

INPUT			OUTPUT: Consumption							
			Rural I&II[2/] (13)	Strata I (14)	Strata II (15)	Strata III (16)	Strata IV (17)	Exports (18)	Losses (19)	Inventory (20)
1.	Product. Techn.	High	--	--	--	--	--	--	--	--
2.		Medium	1.8	--	--	--	--	--	--	--
3.		Low	31.9	--	--	--	--	--	--	--
4.	Transportation	Motor	--	--	--	--	--	--	.4	--
5.		Animal	--	--	--	--	--	--	.3	--
6.		Human	--	--	--	--	--	--	.1	--
7.	Processing	On-farm	--	--	--	--	--	--	1.7	--
8.		Small	--	--	--	--	--	--	.1	--
9.		Med & Large	--	--	--	--	--	--	.7	--
10.	Market. & Storage	On-farm	2.7	--	--	--	--	--	.1	--
11.		Small	--	37.6	31.0	54.5	50.9	--	--	--
12.		Med & Large	--	43.4	35.5	76.8	71.7	427.0	--	--
13.	Households	Rural I & II	--	--	--	--	--	--	--	--
14.		Strata I	--	--	--	--	--	--	--	--
15.		Strata II	--	--	--	--	--	--	--	--
16.		Strata III	--	--	--	--	--	--	--	--
17.		Strata IV	--	--	--	--	--	--	--	--
18.	Imports/Exports		--	--	--	--	--	--	--	--
19.	Losses		--	--	--	--	--	--	--	--
			Fossil Fuel Energy Requirement 10^3 Kcal/MT							
			--	--	--	--	--	--	--	--

Total Fuel Requirement by Source (10^6 Kcal): Coffee

		Total	Percent	Total Percent
20.	All Sources	74766		
	Percent		100	
	Fertilizer	4873	6.5	
	Diesel	8314	11.1	
	Gasoline	593	0.8	
	Propane	340	0.5	
	Fuel Oil	--	--	
	Kerosene	21	--	
	Oil & Grease	633	0.8	
	Crude Oil	67	0.1	
	Electricity	6766	9.0	
	Charcoal	--	--	
	Wood	53259	71.1	

[2/] Includes family consumption, rural direct sales and payments in kind.

RAW PRODUCT INPUT/OUTPUT TABLE FOR SWEET POTATO (10^2 MT)

Total Energy Output Values for Each Output Stage (10^6 Kcal)

INPUT			OUTPUT: On-farm Production			Primary Transport Storage			Processing			Marketing and Storage		
			High Tech. (1)	Medium Tech. (2)	Low Tech. (3)	Motor[1/] (4)	Animal[1/] (5)	Human[1/] (6)	On-farm Storage (7)	Small (8)	Med & Large (9)	On-farm (10)	Small (11)	Med & Large (12)
1.	Product. Techn.	High	5.5	--	--	110.2	56.0	16.3	--	--	--	5.6	--	--
2.		Medium	--	6.7	--	86.5	44.0	12.8	--	--	--	5.6	--	--
3.		Low	--	--	15.1	200.8	102.0	29.6	--	--	--	.6	--	--
4.	Transportation	Motor	--	--	--	--	--	--	--	--	--	--	174.9	222.6
5.		Animal	--	--	--	--	--	--	--	--	--	--	88.9	113.1
6.		Human	--	--	--	--	--	--	--	--	--	--	25.8	30.2
7.	Processing	On-farm	--	--	--	--	--	--	--	--	--	--	--	--
8.		Small	--	--	--	--	--	--	--	--	--	--	--	--
9.		Med & Large	--	--	--	--	--	--	--	--	--	--	--	--
10.	Market. & Storage	On-farm	--	--	--	--	--	--	--	--	--	--	--	--
11.		Small	--	--	--	--	--	--	--	--	--	--	--	--
12.		Med & Large	--	--	--	--	--	--	--	--	--	--	--	--
13.	Households	Rural I & II	--	--	--	--	--	--	--	--	--	--	--	--
14.		Strata I	--	--	--	--	--	--	--	--	--	--	--	--
15.		Strata II	--	--	--	--	--	--	--	--	--	--	--	--
16.		Strata III	--	--	--	--	--	--	--	--	--	--	--	--
17.		Strata IV	--	--	--	--	--	--	--	--	--	--	--	--
18.	Imports/Exports		--	--	--	--	--	--	--	--	--	--	--	--
19.	Losses		--	--	--	--	--	--	--	--	--	--	--	--
			Fossil Fuel Energy Requirement 10^3 Kcal/Mt											
			4	5	--	6	--	--	--	--	--	--	61	85
			Total Fuel Requirement by Source (10^6 Kcal): Sweet Potato											
20.	All Sources		86	133	--	224	--	--	--	--	--	--	1756	3098
	Percent		1.6	2.5	--	4.2	--	--	--	--	--	--	33.2	58.5
		Fertilizer	--	--	--	--	--	--	--	--	--	--	--	--
		Diesel	86	133	--	161	--	--	--	--	--	--	140	433
		Gasoline	--	--	--	63	--	--	--	--	--	--	88	279
		Propane	--	--	--	--	--	--	--	--	--	--	105	155
		Fuel Oil	--	--	--	--	--	--	--	--	--	--	--	--
		Kerosene	--	--	--	--	--	--	--	--	--	--	35	--
		Oil & Grease	--	--	--	--	--	--	--	--	--	--	--	--
		Crude Oil	--	--	--	--	--	--	--	--	--	--	18	31
		Electricity	--	-	--	--	--	--	--	--	--	--	1370	2200
		Charcoal	--	--	--	--	--	--	--	--	--	--	--	--
		Wood	--	--	--	--	--	--	--	--	--	--	--	--

1/ Includes large and medium storage, off-farm processing, and direct farm marketings, all categorized by X-port Mode.

CONTINUED FOR SWEET POTATO

INPUT			OUTPUT							
			Consumption							
			Rural I&II[2/] (13)	Strata I (14)	Strata II (15)	Strata III (16)	Strata IV (17)	Exports (18)	Losses (19)	Inventory (20)
1.	Product. Techn.	High	10.7	--	--	--	--	--	--	--
2.		Medium	91.5	--	--	--	--	--	--	--
3.		Low	200.9	--	--	--	--	--	9.0	--
4.	Transportation	Motor	--	--	--	--	--	--	--	--
5.		Animal	--	--	--	--	--	--	--	--
6.		Human	--	--	--	--	--	--	--	--
7.	Processing	On-farm	--	--	--	--	--	--	--	--
8.		Small	--	--	--	--	--	--	--	--
9.		Med & Large	--	--	--	--	--	--	--	--
10.	Market. & Storage	On-farm	5.6	--	--	--	--	--	.6	--
11.		Small	--	48.4	48.4	94.6	36.4	32.8	29.0	--
12.		Med & Large	--	61.1	61.1	119.5	46.0	41.7	36.5	--
13.	Households	Rural I & II	--	--	--	--	--	--	--	--
14.		Strata I	--	--	--	--	--	--	--	--
15.		Strata II	--	--	--	--	--	--	--	--
16.		Strata III	--	--	--	--	--	--	--	--
17.		Strata IV	--	--	--	--	--	--	--	--
18.	Imports/Exports		--	--	--	--	--	--	--	--
19.	Losses		--	--	--	--	--	--	--	--
			Fossil Fuel Energy Requirement 10^3 Kcal/MT							
			--	---	--	--	--	--	--	--

Total Fuel Requirement by Source (10^6 Kcal): Sweet Potato

		Total	Percent	Total Percent
20.	All Sources Percent	5297	100	
	Fertilizer	953	18.0	
	Diesel	430	8.1	
	Gasoline	260	4.9	
	Propane	--	--	
	Fuel Oil	35	0.7	
	Kerosene	--	--	
	Oil & Grease	49	.9	
	Crude Oil	3570	67.4	
	Electricity	--	--	
	Charcoal	--	--	
	Wood	--	--	

[2/] Includes family consumption, rural direct sales and payments in kind.

TABLE D-12

RAW PRODUCT INPUT/OUTPUT TABLE FOR POTATOES (10^2 MT)

Total Energy Output Values for Each Output Stage (10^6 Kcal)

INPUT		OUTPUT: On-farm Production			Primary Transport Storage			Processing			Marketing and Storage		
		High Tech. (1)	Medium Tech. (2)	Low Tech. (3)	Motor[1/] (4)	Animal[1/] (5)	Human[1/] (6)	On-farm Storage (7)	Small (8)	Med & Large (9)	On-farm (10)	Small (11)	Med & Large (12)
1. Product. Techn.	High	--	--	--	60.3	38.5	5.2	--	--	--	--	--	--
2.	Medium	--	--	--	6.2	4.0	0.5	--	--	--	--	--	--
3.	Low	--	--	--	--	--	--	--	--	--	3.9	--	--
4. Transportation	Motor	--	--	--	--	--	--	--	0.2	0.9	--	28.8	36.6
5.	Animal	--	--	--	--	--	--	--	0.1	0.6	--	18.4	23.4
6.	Human	--	--	--	--	--	--	--	--	0.1	--	2.4	3.2
7. Processing	On-farm	--	--	--	--	--	--	--	--	--	--	--	--
8.	Small	--	--	--	--	--	--	--	--	--	--	.1	.2
9.	Med & Large	--	--	--	--	--	--	--	--	--	--	.7	.9
10. Market. & Storage	On-farm	--	--	--	--	--	--	--	--	--	--	--	--
11.	Small	--	--	--	--	--	--	--	--	--	--	--	--
12.	Med & Large	--	--	--	--	--	--	--	--	--	--	--	--
13. Households	Rural I & II	--	--	--	--	--	--	--	--	--	--	--	--
14.	Strata I	--	--	--	--	--	--	--	--	--	--	--	--
15.	Strata II	--	--	--	--	--	--	--	--	--	--	--	--
16.	Strata III	--	--	--	--	--	--	--	--	--	--	--	--
17.	Strata IV	--	--	--	--	--	--	--	--	--	--	--	--
18. Imports/Exports		--	--	--	--	--	--	--	--	--	--		
19. Losses		--	--	--	--	--	--	--	--	--	--	--	--
		Fossil Fuel Energy Requirement 10^3 Kcal/MT											
		173	527	--	6	--	--	--	801	447	--	61	85
		Total Fuel Requirement by Source (10^6 Kcal): Potatoes											
20. All Sources		1824	597	--	41	--	--	--	24	71	--	306	544
Percent		53.5	17.5	--	1.2	--	--	--	0.7	2.1	--	9.0	16.0
	Fertilizer	1633	597	--	--	--	--	--	--	--	--	--	--
	Diesel	191	--	--	30	--	--	--	2	4	--	24	--
	Gasoline	--	--	--	11	--	--	--	--	--	--	15	49
	Propane	--	--	--	--	--	--	--	--	--	--	18	27
	Fuel Oil	--	--	--	--	--	--	--	13	61	--	--	7[illegible]
	Kerosene	--	--	---	--	--	--	--	--	--	--	--	--
	Oil & Grease	--	--	--	--	--	--	--	--	--	--	6	5
	Crude Oil	--	--	--	--	--	--	--	--	--	--	3	--
	Electricity	--	--	--	--	--	--	--	--	--	--	--	--
	Charcoal	--	--	---	--	--	--	--	9	6	--	240	387
	Wood	--	--	--	--	--	--	--	--	--	--	--	--

1/ Includes large and medium storage, off-farm processing, and direct farm marketings, all categorized by X-port Mode.

TABLE D-12

CONTINUED FOR POTATOES

INPUT			OUTPUT							
			Consumption							
			Rural I&II[2/] (13)	Strata I (14)	Strata II (15)	Strata III (16)	Strata IV (17)	Exports (18)	Losses (19)	Inventory (20)
1.	Product. Techn.	High	1.3	--	--	--	--	--	--	--
2.		Medium	.6	--	--	--	--	--	--	--
3.		Low	--	--	--	--	--	--	--	--
4.	Transportation	Motor	--	--	--	--	--	--	--	--
5.		Animal	--	--	--	--	--	--	--	--
6.		Human	--	--	--	--	--	--	--	--
7.	Processing	On-farm	--	--	--	--	--	--	--	--
8.		Small	--	--	--	--	--	--	--	--
9.		Med & Large	--	--	--	--	--	--	--	--
10.	Market. & Storage	On-farm	3.3	--	--	--	--	--	.5	--
11.		Small	--	6.6	6.2	12.3	18.3	--	7.0	--
12.		Med & Large	--	8.4	7.9	15.7	23.3	--	9.0	--
13.	Households	Rural I & II	--	--	--	--	--	--	--	--
14.		Strata I	--	--	--	--	--	--	--	--
15.		Strata II	--	--	--	--	--	--	--	--
16.		Strata III	--	--	--	--	--	--	--	--
17.		Strata IV	--	--	--	--	--	--	--	--
18.	Imports/Exports		--	--	--	--	--	--	--	--
19.	Losses		--	--	--	--	--	--	--	--
			Fossil Fuel Energy Requirement 10^3 Kcal/MT							
			--	--	--	--	--	--	--	--

Total Fuel Requirement by Source (10^6 Kcal): Potatoes

		Total	Percent		
20.	All Sources	3407	100	Total	
	Percent			Percent	
	Fertilizer	2230	65.5		
	Diesel	251	7.4		
	Gasoline	75	2.2		
	Propane	45	1.3		
	Fuel Oil	150	4.4		
	Kerosene	--	--		
	Oil & Grease	11	0.3		
	Crude Oil	3	0.1		
	Electricity	--	--		
	Charcoal	642	18.8		
	Wood	--	--		

[2/] Includes family consumption, rural direct sales and payments in kind.

TABLE D-13

RAW PRODUCT INPUT/OUTPUT TABLE FOR TOMATOES (10^2 MT)

Total Energy Output Values for Each Output Stage (10^6 Kcal)

			OUTPUT											
			On-farm Production			Primary Transport Storage			Processing			Marketing and Storage		
			High Tech. (1)	Medium Tech. (2)	Low Tech. (3)	Motor[1/] (4)	Animal[1/] (5)	Human[1/] (6)	On-farm Storage (7)	Small (8)	Med & Large (9)	On-farm (10)	Small (11)	Med & Large (12)
1.	Product. Techn.	High	--	--	--	213.6	64.1	78.3	--	--	--	--	--	--
2.		Medium	--	--	--	--	--	--	--	--	--	--	--	--
3.		Low	--	--	--	231.6	69.5	84.9	--	--	--		--	--
4.	Transportation	Motor	--	--	--	--	--	--	--	7.4	41.8	--	174.2	221.8
5.		Animal	--	--	--	--	--	--	--	2.2	12.6	--	52.3	66.6
6.		Human	--	--	--	--	--	--	--	2.7	15.3	--	71.8	91.4
7.	Processing	On-farm	--	--	--	--	--	--	--	--	--	--	--	--
8.		Small	--	--	--	--	--	--	--	--	--	--	4.7	6.0
9.		Med & Large	--	--	--	--	--	--	--	--	--	--	26.7	34.0
10.	Market. & Storage	On-farm	--	--	--	--	--	--	--	--	--	--	--	--
11.		Small	--	--	--	--	--	--	--	--	--	--	--	--
12.		Med & Large	--	--	--	--	--	--	--	--	--	--	--	--
13.	Households	Rural I & II	--	--	--	--	--	--	--	--	--	--	--	--
14.		Strata I	--	--	--	--	--	--	--	--	--	--	--	--
15.		Strata II	--	--	--	--	--	--	--	--	--	--	--	--
16.		Strata III	--	--	--	--	--	--	--	--	--	--	--	--
17.		Strata IV	--	--	--	--	--	--	--	--	--	--	--	--
18.	Imports/Exports		--	--	--	--	--	--	--	--	--	--	--	--
19.	Losses		--	--	--	--	--	--	--	--	--	--	--	--
			Fossil Fuel Energy Requirement 10^3 Kcal/MT											
			376	1070	--	11	--	--	--	801	447	--	61	85
			Total Fuel Requirement by Source (10^6 Kcal): Tomatoes											
20.	All Sources		16156	1739	--	499	--	--	--	985	3516	--	2000	3555
	Percent		56.8	6.1	--	1.7	--	--	--	3.5	12.4	--	7.0	12.5
		Fertilizer	14706	1739	--	--	--	--	--	--	--	--	--	--
		Diesel	1450	--	--	359	--	--	--	374	387	--	160	498
		Gasoline	--	--	--	140	--	--	--	--	--	--	100	320
		Propane	--	--	--	--	--	--	--	--	--	--	120	178
		Fuel Oil	--	--	--	--	--	--	--	434	2953	--	--	--
		Kerosene	--	--	--	--	--	--	--	--	--	--	40	--
		Oil & Grease	--	--	--	--	--	--	--	--	--	--	20	36
		Crude Oil	--	--	--	--	--	--	--	--	--	--	--	--
		Electricity	--	--	--	--	--	--	--	177	176	--	1560	2523
		Charcoal	--	--	--	--	--	--	--	--	--	-	--	--
		Wood	--	--	--	--	--	--	--	--	--	--	--	--

1/ Includes large and medium storage, off-farm processing, and direct farm marketings, all categorized by X-port Mode.

TABLE D-13

CONTINUED FOR TOMATOES

INPUT			OUTPUT Consumption							
			Rural I&II[2/] (13)	Strata I (14)	Strata II (15)	Strata III (16)	Strata IV (17)	Exports (18)	Losses (19)	Inventory (20)
1.	Product. Techn.	High	73.1	--	--	--	--	--	--	--
2.		Medium	16.3	--	--	--	--	--	--	--
3.		Low	424.6	--	--	--	--	--	186.9	--
4.	Transportation	Motor	--	--	--	--	--	--	--	--
5.		Animal	--	--	--	--	--	--	--	--
6.		Human	--	--	--	--	--	--	--	--
7.	Processing	On-farm	--	--	--	--	--	--	--	--
8.		Small	--	--	--	--	--	--	--	--
9.		Med & Large	--	--	--	--	--	--	--	--
10.	Market. & Storage	On-farm	--	--	--	--	--	--	--	--
11.		Small	--	12.3	44.6	115.1	118.9	--	38.8	--
12.		Med & Large	--	15.7	56.8	146.5	151.4	--	49.4	--
13.	Households	Rural I & II	--	--	--	--	--	--	--	--
14.		Strata I	--	--	--	--	--	--	--	--
15.		Strata II	--	--	--	--	--	--	--	--
16.		Strata III	--	--	--	--	--	--	--	--
17.		Strata IV	--	--	--	--	--	--	--	--
18.	Imports/Exports		--	--	--	--	--	--	--	--
19.	Losses		--	--	--	--	--	--	--	--
			Fossil Fuel Energy Requirement 10^3 Kcal/MT							
			--	--	--	--	--	--	--	--

Total Fuel Requirement by Source (10^6 Kcal): Tomatoes

		Total	Percent	
20.	All Sources	28459	100	Total
	Percent			Percent
	Fertilizer	16445	57.9	
	Diesel	3228	11.3	
	Gasoline	560	2.0	
	Propane	298	1.0	
	Fuel Oil	3387	11.9	
	Kerosene	40	0.1	
	Oil & Grease	56	0.2	
	Crude Oil	--	--	
	Electricity	4436	15.6	
	Charcoal	--	--	
	Wood	--	--	

[2/] Includes family consumption, rural direct sales and payments in kind.

TABLE D-14

RAW PRODUCT INPUT/OUTPUT TABLE FOR PEANUTS (OIL) (10^2 MT)

Total Energy Output Values for Each Output Stage (10^6 Kcal)

			OUTPUT											
			On-farm Production			Primary Transport Storage			Processing			Marketing and Storage		
			High Tech. (1)	Medium Tech. (2)	Low Tech. (3)	Motor[1/] (4)	Animal[1/] (5)	Human[1/] (6)	On-farm Storage (7)	Small (8)	Med & Large (9)	On-farm (10)	Small (11)	Med & Large (12)
INPUT 1.	Product. Techn.	High	--	--	--	10.1	4.9	1.5	--	--	--	--	--	--
2.		Medium	--	--	--	341.9	168.2	50.5	--	--	--	--	--	--
3.		Low	--	--	--	56.6	27.9	8.5	--	--	--	1.0	--	--
4.	Transportation	Motor	--	--	--	--	--	--	--	39.4	223.2	--	64.2	81.8
5.		Animal	--	--	--	--	--	--	--	19.4	109.8	--	31.6	40.2
6.		Human	--	--	--	--	--	--	--	5.8	33.0	--	26.6	33.8
7.	Processing	On-farm	--	--	--	--	--	--	--	--	--	--	--	--
8.		Small	--	--	--	--	--	--	--	--	--	--	25.8	32.9
9.		Med & Large	--	--	--	--	--	--	--	--	--	--	146.5	186.6
10.	Market. & Storage	On-farm	--	--	--	--	--	--	--	--	--	--	--	--
11.		Small	--	--	--	--	--	--	--	--	--	--	--	--
12.		Med & Large	--	--	--	--	--	--	--	--	--	--	--	--
13.	Households	Rural I & II	--	--	--	--	--	--	--	--	--	--	--	--
14.		Strata I	--	--	--	--	--	--	--	--	--	--	--	--
15.		Strata II	--	--	--	--	--	--	--	--	--	--	--	--
16.		Strata III	--	--	--	--	--	--	--	--	--	--	--	--
17.		Strata IV	--	--	--	--	--	--	--	--	--	--	--	--
18.	Imports/Exports		--	--	--	--	--	--	--	--	--	--	28.4	36.1
19.	Losses		--	--	--	--	--	--	--	--	--	--	--	--
			Fossil Fuel Energy Requirement 10^3 Kcal/MT											
			297	162	23	11	--	--	--	2089	1166	--	61	85
			Total Fuel Requirement by Source (10^6 Kcal): Peanuts (Oil)											
20.	All Sources		533	9842	265	431	--	--	--	15040	47551	--	1960	3178
	Percent		0.7	12.5	0.3	0.5	--	--	--	19.1	60.4	--	2.5	4.0
		Fertilizer	443	2801	265	--	--	--	--	--	--	--	--	--
		Diesel	90	7741	--	310	--	--	--	1203	1902	--	157	445
		Gasoline	--	--	--	121	--	--	--	--	--	--	98	286
		Propane	--	--	--	--	--	--	--	--	--	--	178	159
		Fuel Oil	--	--	--	--	--	--	--	12032	42796	--	--	--
		Kerosene	--	--	--	--	--	--	--	--	--	--	39	--
		Oil & Grease	--	--	--	--	--	--	--	--	--	--	20	32
		Crude Oil	--	--	--	--	--	--	--	--	--	--	--	--
		Electricity	--	--	--	--	--	--	--	1805	2853	--	1528	2256
		Charcoal	--	--	--	--	--	--	--	--	--	--	--	--
		Wood	--	--	--	--	--	--	--	--	--	--	--	--

[1/] Includes large and medium storage, off-farm processing, and direct farm marketings, all categorized by X-port Mode.

TABLE D-14

CONTINUED FOR PEANUTS (OIL)

INPUT			OUTPUT: Consumption							
			Rural I&II[2/] (13)	Strata I (14)	Strata II (15)	Strata III (16)	Strata IV (17)	Exports (18)	Losses (19)	Inventory (20)
1.	Product. Techn.	High	2.1	--	--	--	--	--	--	--
2.		Medium	47.8	--	--	--	--	--	--	--
3.		Low	20.2	--	--	--	--	--	--	--
4.	Transportation	Motor	--	--	--	--	--	--	--	--
5.		Animal	--	--	--	--	--	--	--	--
6.		Human	--	--	--	--	--	--	--	--
7.	Processing	On-farm	--	--	--	--	--	--	--	--
8.		Small	--	--	--	--	--	--	5.9	--
9.		Med & Large	--	--	--	--	--	--	32.9	--
10.	Market. & Storage	On-farm	0.9	--	--	--	--	--	0.1	--
11.		Small	--	61.6	50.8	103.8	96.4	--	11.0	--
12.		Med & Large	--	78.4	64.7	131.5	122.7	--	14.0	--
13.	Households	Rural I & II	--	--	--	--	--	--	--	--
14.		Strata I	--	--	--	--	--	--	--	--
15.		Strata II	--	--	--	--	--	--	--	--
16.		Strata III	--	--	--	--	--	--	--	--
17.		Strata IV	--	--	--	--	--	--	--	--
18.	Imports/Exports		--	--	--	--	--	--	--	--
19.	Losses		--	--	--	--	--	--	--	--
			Fossil Fuel Energy Requirement 10^3 Kcal/MT							
			--	--	--	--	--	--	--	--

Total Fuel Requirement by Source (10^6 Kcal): Peanuts (oil)

		Total	Percent
20.	All Sources	78800	100
	Percent		

	Total	Percent
Fertilizer	3509	4.5
Diesel	11148	14.1
Gasoline	505	0.6
Propane	277	0.4
Fuel Oil	54828	69.6
Kerosene	39	--
Oil & Grease	52	0.1
Crude Oil	--	--
Electricity	8442	10.7
Charcoal	--	--
Wood	--	--

[2/] Includes family consumption, rural direct sales and payments in kind.

TABLE D-15

RAW PRODUCT INPUT/OUTPUT TABLE FOR ONIONS (10^2 MT)

Total Energy Output Values for Each Output Stage (10^6 Kcal)

INPUT			OUTPUT: On-farm Production			Primary Transport Storage			Processing			Marketing and Storage		
			High Tech. (1)	Medium Tech. (2)	Low Tech. (3)	Motor[1/] (4)	Animal[1/] (5)	Human[1/] (6)	On-farm Storage (7)	Small (8)	Med & Large (9)	On-farm (10)	Small (11)	Med & Large (12)
1.	Product. Techn.	High	--	--	--	72.7	37.0	18.5	--	--	--	--	--	--
2.		Medium	--	--	--	--	--	--	--	--	--	--	--	--
3.		Low	--	--	--	--	--	--	--	--	--	--	--	--
4.	Transportation	Motor	--	--	--	--	--	--	--	1.9	11.0	--	2.63	33.5
5.		Animal	--	--	--	--	--	--	--	1.0	5.6	--	13.4	17.0
6.		Human	--	--	--	--	--	--	--	0.5	2.8	--	6.7	8.5
7.	Processing	On-farm	--	--	--	--	--	--	--	--	--	--	--	--
8.		Small	--	--	--	--	--	--	--	--	--	--	1.5	1.8
9.		Med & Large	--	--	--	--	--	--	--	--	--	--	8.3	10.5
10.	Market. & Storage	On-farm	--	--	--	--	--	--	--	--	--	--	--	--
11.		Small	--	--	--	--	--	--	--	--	--	--	--	--
12.		Med & Large	--	--	--	--	--	--	--	--	--	--	--	--
13.	Households	Rural I & II	--	--	--	--	--	--	--	--	--	--	--	--
14.		Strata I	--	--	--	--	--	--	--	--	--	--	--	--
15.		Strata II	--	--	--	--	--	--	--	--	--	--	--	--
16.		Strata III	--	--	--	--	--	--	--	--	--	--	--	--
17.		Strata IV	--	--	--	--	--	--	--	--	--	--	--	--
18.	Imports/Exports		--	--	--	--	--	--	--	--	--	--	--	--
19.	Losses		--	--	--	--	--	--	--	--	--	--	--	--
			Fossil Fuel Energy Requirement 10^3 Kcal/MT											
			106	--	--	8	--	--	--	387	216	--	61	85
			Total Fuel Requirement by Source (10^6 Kcal): Onions											
20.	All Sources		1444	--	--	57	--	--	--	132	420	--	341	604
	Percent		48.2	--	--	1.9	--	--	--	4.4	14.0	--	11.4	20.1
		Fertilizer	1442	--	--	--	--	--	--	--	--	--	--	--
		Diesel	2	--	--	41	--	--	--	66	218	--	27	85
		Gasoline	--	--	--	16	--	--	--	--	--	--	17	54
		Propane	--	--	--	--	--	--	--	--	--	--	20	30
		Fuel Oil	--	--	--	--	--	--	--	18	118	--	--	--
		Kerosene	--	--	--	--	--	--	--	--	--	--	7	--
		Oil & Grease	--	--	--	--	--	--	--	--	--	--	3	6
		Crude Oil	--	--	--	--	--	--	--	--	--	--	--	--
		Electricity	--	--	--	--	--	--	--	48	84	--	267	429
		Charcoal	--	--	--	--	--	--	--	--	--	--	--	--
		Wood	--	--	--	--	--	--	--	--	--	--	--	--

[1/] Includes large and medium storage, off-farm processing, and direct farm marketings, all categorized by X-port Mode.

TABLE D-15

CONTINUED FOR ONIONS

INPUT			OUTPUT							
			Consumption							
			Rural I&II[2/] (13)	Strata I (14)	Strata II (15)	Strata III (16)	Strata IV (17)	Exports (18)	Losses (19)	Inventory (20)
1.	Product. Techn.	High	3.8	--	--	--	--	--	--	--
2.		Medium	--	--	--	--	--	--	--	--
3.		Low	--	--	--	--	--	--	--	--
4.	Transportation	Motor	--	--	--	--	--	--	--	--
5.		Animal	--	--	--	--	--	--	--	--
6.		Human	--	--	--	--	--	--	--	--
7.	Processing	On-farm	--	--	--	--	--	--	--	--
8.		Small	--	--	--	--	--	--	--	--
9.		Med & Large	--	--	--	--	--	--	.1	--
10.	Market. & Storage	On-farm	--	--	--	--	--	--	.6	--
11.		Small	--	6.7	11.3	24.8	11.8	--	1.5	--
12.		Med & Large	--	8.5	14.4	31.6	15.0	--	1.9	--
13.	Households	Rural I & II	--	--	--	--	--	--	--	--
14.		Strata I	--	--	--	--	--	--	--	--
15.		Strata II	--	--	--	--	--	--	--	--
16.		Strata III	--	--	--	--	--	--	--	--
17.		Strata IV	--	--	--	--	--	--	--	--
18.	Imports/Exports		--	--	--	--	--	--	--	--
19.	Losses		--	--	--	--	--	--	--	--
			Fossil Fuel Energy Requirement 10^3 Kcal/MT							
			--	--	--	--	--	--	--	--

Total Fuel Requirement by Source (10^6 Kcal): Onions

		Total	Percent	Total Percent
20.	All Sources Percent	2998	100	
	Fertilizer	1442	48.[illegible]	
	Diesel	439	14.6	
	Gasoline	87	2.9	
	Propane	50	1.7	
	Fuel Oil	136	4.5	
	Kerosene	7	0.2	
	Oil & Grease	9	0.3	
	Crude Oil	--	--	
	Electricity	828	27.6	
	Charcoal	--	--	
	Wood	--	--	

[2/] Includes family consumption, rural direct sales and payments in kind.

TABLE D-16

RAW PRODUCT INPUT/OUTPUT TABLE FOR BEEF (10^2 MT)

Total Energy Output Values for Each Output Stage (10^6 Kcal)

INPUT		OUTPUT: On-farm Production			Primary Transport Storage			Processing			Marketing and Storage		
		High Tech. (1)	Medium Tech. (2)	Low Tech. (3)	Motor[1/] (4)	Animal[1/] (5)	Human[1/] (6)	On-farm Storage (7)	Small (8)	Med & Large (9)	On-farm (10)	Small (11)	Med & Large (12)
1. Product. Techn.	High	--	--	--	--	--	--	--	--	--	--	--	--
2.	Medium	--	--	--	--	130.5	--	--	--	--	--	--	--
3.	Low	--	--	--		385.5	--	--	--	--	--	--	--
4. Transportation	Motor	--	--	--	--	--	--	--	--	--	--	--	--
5.	Animal	--	--	--	--	--	--	--	5.5	31.1	--	235.0	244.5
6.	Human	--	--	--	--	--	--	--	--	--	--	--	--
7. Processing	On-farm	--	--	--	--	--	--	--	--	--	--	2.7	2.8
8.	Small	--	--	--	--	--	--	--	--	--	--	15.2	15.9
9.	Med & Large	--	--	--	--	--	--	--	--	--	--	--	--
10. Market. & Storage	On-farm	--	--	--	--	--	--	--	--	--	--	--	--
11.	Small	--	--	--	--	--	--	--	--	--	--	--	--
12.	Med & Large	--	--	--	--	--	--	--	--	--	--	--	--
13. Households	Rural I & II	--	--	--	--	--	--	--	--	--	--	--	--
14.	Strata I	--	--	--	--	--	--	--	--	--	--	--	--
15.	Strata II	--	--	--	--	--	--	--	--	--	--	--	--
16.	Strata III	--	--	--	--	--	--	--	--	--	--	--	--
17.	Strata IV	--	--	--	--	--	--	--	--	--	--	--	--
18. Imports/Exports		--	--	--	--	--	--	--	--	--	--	--	--
19. Losses		--	--	--	--	--	--	--	--	--	--	--	--
		Fossil Fuel Energy Requirement 10^3 Kcal/MT											
		--	21332	21332	--	--	--	--	4709	2628	--	76	108
		Total Fuel Requirement by Source (10^6 Kcal): Beef											
20. All Sources		--	8358	24676	--	--	--	--	2590	8172	--	1917	2785
Percent		--	17.2	50.9	--	--	--	--	5.3	16.9	--	4.0	5.7
	Fertilizer	--	6269	24676	--	--	--	--	--	--	--	--	--
	Diesel	--	2089	--	--	--	--	--	78	409	--	154	390
	Gasoline	--	--	--	--	--	--	--	--	--	--	96	251
	Propane	--	--	--	--	--	--	--	337	654	--	115	139
	Fuel Oil	--	--	--	--	--	--	--	--	1961	--	--	--
	Kerosene	--	--	--	--	--	--	--	--	--	--	38	--
	Oil & Grease	--	--	--	--	--	--	--	--	--	--	19	28
	Crude Oil	--	--	--	--	--	--	--	--	--	--	--	--
	Electricity	--	--	--	--	--	--	--	518	1308	--	1495	1977
	Charcoal	--	--	--	--	--	--	--	622	1389	--	--	--
	Wood	--	--	--	--	--	--	--	1035	2451	--	--	--

1/ Includes large and medium storage, off-farm processing, and direct farm marketings, all categorized by X-port Mode.

TABLE D-16

CONTINUED FOR BEEF

INPUT			OUTPUT: Consumption							
			Rural I&II[2/] (13)	Strata I (14)	Strata II (15)	Strata III (16)	Strata IV (17)	Exports (18)	Losses (19)	Inventory (20)
1.	Product. Techn.	High	--	--	--	--	--	--	--	--
2.		Medium	3.9	--	--	--	--	--	--	--
3.		Low	11.6	--	--	--	--	--	--	--
4.	Transportation	Motor	--	--	--	--	--	--	--	--
5.		Animal	--	--	--	--	--	--	--	--
6.		Human	--	--	--	--	--	--	--	--
7.	Processing	On-farm	--	--	--	--	--	--	--	--
8.		Small	--	--	--	--	--	--	---	--
9.		Med & Large	--	--	--	--	--	--	.2	--
10.	Market. & Storage	On-farm	--	--	--	--	--	--	--	--
11.		Small	--	12.9	30.1	118.8	83.4	7.1	.6	--
12.		Med & Large	--	13.4	31.2	123.6	86.8	7.4	.7	--
13.	Households	Rural I & II	--	--	--	--	--	--	--	--
14.		Strata I	--	--	--	--	--	--	--	--
15.		Strata II	--	--	--	--	--	--	--	--
16.		Strata III	--	--	--	--	--	--	--	--
17.		Strata IV	--	--	--	--	--	--	--	--
18.	Imports/Exports		--	--	--	--	--	--	--	--
19.	Losses		--	--	--	--	--	--	--	--
			Fossil Fuel Energy Requirement 10^3 Kcal/MT							
			--	--	--	--	--	-	--	--

Total Fuel Requirement by Source (10^6 Kcal): Beef

		Total	Percent	Total Percent
20.	All Sources Percent	48498	100	
	Fertilizer	39045	63.8	
	Diesel	3120	6.4	
	Gasoline	347	.7	
	Propane	1245	2.6	
	Fuel Oil	1961	4.0	
	Kerosene	38	.1	
	Oil & Grease	47	.1	
	Crude Oil	--	--	
	Electricity	5298	10.9	
	Charcoal	2011	4.1	
	Wood	3486	7.2	

[2/] Includes family consumption, rural direct sales and payments in kind.

TABLE D-17

RAW PRODUCT INPUT/OUTPUT TABLE FOR MILK (10^2 MT)

Total Energy Output Values for Each Output Stage (10^6 Kcal)

			OUTPUT											
			On-farm Production			Primary Transport Storage			Processing			Marketing and Storage		
			High Tech. (1)	Medium Tech. (2)	Low Tech. (3)	Motor[1/] (4)	Animal[1/] (5)	Human[1/] (6)	On-farm Storage (7)	Small (8)	Med & Large (9)	On-farm (10)	Small (11)	Med & Large (12)
INPUT														
1.	Product. Techn.	High	--	--	--	--	--	--	--	--	--	--	--	--
2.		Medium	--	--	--	458.8	211.8	35.3	--	--	--	--	--	--
3.		Low	--	--	--	1354.7	625.2	104.2	--	--	--	--	--	--
4.	Transportation	Motor	--	--	--	--	--	--	--	91.8	520	--	588.8	612.9
5.		Animal	--	--	--	--	--	--	--	42.4	240	--	271.8	282.8
6.		Human	--	--	--	--	--	--	--	7.1	40	--	45.3	47.1
7.	Processing	On-farm	--	--	--	--	--	--	--	--	--	--	--	--
8.		Small	--	--	--	--	--	--	--	--	--	--	62.3	64.9
9.		Med & Large	--	--	--	--	--	--	--	--	--	--	352.8	367.2
10.	Market. & Storage	On-farm	--	--	--	--	--	--	--	--	--	--	--	--
11.		Small	--	--	--	--	--	--	--	--	--	--	--	--
12.		Med & Large	--	--	--	--	--	--	--	--	--	--	--	--
13.	Households	Rural I & II	--	--	--	--	--	--	--	--	--	--	--	--
14.		Strata I	--	--	--	--	--	--	--	--	--	--	--	--
15.		Strata II	--	--	--	--	--	--	--	--	--	--	--	--
16.		Strata III	--	--	--	--	--	--	--	--	--	--	--	--
17.		Strata IV	--	--	--	--	--	--	--	--	--	--	--	--
18.	Imports/Exports		--	--	--	--	--	--	--	--	--	--	--	--
19.	Losses		--	--	--	--	--	--	--	--	--	--	--	--
			Fossil Fuel Energy Requirement 10^3 Kcal/MT											
			--	28	28	8	--	--	--	1102	615	--	76	106
			Total Fuel Requirement by Source (10^6 Kcal): Milk											
20.	All Sources		--	2008	5930	1505	--	--	--	15586	49244	--	10015	14552
	Percent		--	2.0	6.0	1.5	--	--	--	15.8	49.9	--	10.1	14.7
		Fertilizer	--	1506	5930	--	--	--	--	--	--	--	--	--
		Diesel	--	502	--	1084	--	--	--	3429	14773	--	801	2037
		Gasoline	--	--	--	421	--	--	--	--	--	--	501	1310
		Propane	--	--	--	--	--	--	--	--	--	--	601	728
		Fuel Oil	--	--	--	--	--	--	--	5923	24622	--	--	--
		Kerosene	--	--	--	--	--	--	--	--	--	--	200	--
		Oil & Grease	--	--	--	--	--	--	--	--	--	--	100	146
		Crude Oil	--	--	--	--	--	--	--	--	--	--	--	--
		Electricity	--	--	--	--	--	--	--	6234	9849	--	7812	10331
		Charcoal	--	--	--	--	--	--	--	--	--	--	--	--
		Wood	--	--	--	--	--	--	--	--	--	--	--	--

[1/] Includes large and medium storage, off-farm processing, and direct farm marketings, all categorized by X-port Mode.

TABLE D-17

CONTINUED FOR MILK

INPUT			OUTPUT: Consumption							
			Rural I&II[2/] (13)	Strata I (14)	Strata II (15)	Strata III (16)	Strata IV (17)	Exports (18)	Losses (19)	Inventory (20)
1.	Product. Techn.	High	--	--	--	--	--	--	--	--
2.		Medium	--	--	--	--	--	--	--	--
3.		Low	--	--	--	--	--	--	--	--
4.	Transportation	Motor	--	--	--	--	--	--	--	--
5.		Animal	--	--	--	--	--	--	--	--
6.		Human	--	--	--	--	--	--	--	--
7.	Processing	On-farm	--	--	--	--	--	--	--	--
8.		Small	--	--	--	--	--	--	14.1	--
9.		Med & Large	--	--	--	--	--	--	80.0	--
10.	Market. & Storage	On-farm	--	--	--	--	--	--	--	--
11.		Small	--	73.8	283.0	725.9	147.6	--	90.6	--
12.		Med & Large	--	76.8	294.0	755.5	153.6	--	94.3	--
13.	Households	Rural I & II	--	--	--	--	--	--	--	--
14.		Strata I	--	--	--	--	--	--	--	--
15.		Strata II	--	--	--	--	--	--	--	--
16.		Strata III	--	--	--	--	--	--	--	--
17.		Strata IV	--	--	--	--	--	--	--	--
18.	Imports/Exports		--	--	--	--	--	--	--	--
19.	Losses		--	--	--	--	--	--	--	--
			Fossil Fuel Energy Requirement 10^3 Kcal/MT							
			--	--	--	--	--	--	--	--

Total Fuel Requirement by Source (10^6 Kcal): Milk

		Total	Percent	Total	Percent
20.	All Sources	98840	100		
	Fertilizer	7436	7.5		
	Diesel	22626	229		
	Gasoline	2232	23		
	Propane	1329	1.3		
	Fuel Oil	30545	309		
	Kerosene	200	.2		
	Oil & Grease	246	.2		
	Crude Oil	--	--		
	Electricity	34226	34.7		
	Charcoal	--	--		
	Wood	--	--		

[2/] Includes family consumption, rural direct sales and payments in kind.

TABLE D-18

RAW PRODUCT INPUT/OUTPUT TABLE FOR CHICKEN (10^2 MT)

Total Energy Output Values for Each Output Stage (10^6 Kcal)

			OUTPUT											
			On-farm Production			Primary Transport Storage			Processing			Marketing and Storage		
			High Tech. (1)	Medium Tech. (2)	Low Tech. (3)	Motor[1/] (4)	Animal[1/] (5)	Human[1/] (6)	On-farm Storage (7)	Small (8)	Med & Large (9)	On-farm (10)	Small (11)	Med & Large (12)
INPUT 1.	Product. Techn.	High	--	--	--	--	--	--	--	--	--	--	--	--
2.		Medium	--	--	--	--	--	--	--	--	--	--	--	--
3.		Low	--	--	--	--	419.5	--	--	--	--	--	--	--
4.	Transportation	Motor	--	--	--	--	--	--	--	--	--	--	205.6	213.9
5.		Animal	--	--	--	--	--	--	--	--	--	--	--	--
6.		Human	--	--	--	--	--	--	--	--	--	--	--	--
7.	Processing	On-farm	--	--	--	--	--	--	--	--	--	--	--	--
8.		Small	--	--	--	--	--	--	--	--	--	--	--	--
9.		Med & Large	--	--	--	--	--	--	--	--	--	--	--	--
10.	Market. & Storage	On-farm	--	--	--	--	--	--	--	--	--	--	--	--
11.		Small	--	--	--	--	--	--	--	--	--	--	--	--
12.		Med & Large	--	--	--	--	--	--	--	--	--	--	--	--
13.	Households	Rural I & II	--	--	--	--	--	--	--	--	--	--	--	--
14.		Strata I	--	--	--	--	--	--	--	--	--	--	--	--
15.		Strata II	--	--	--	--	--	--	--	--	--	--	--	--
16.		Strata III	--	--	--	--	--	--	--	--	--	--	--	--
17.		Strata IV	--	--	--	--	--	--	--	--	--	--	--	--
18.	Imports/Exports		--	--	--	--	--	--	--	--	--	--	--	--
19.	Losses		--	--	--	--	--	--	--	--	--	--	--	--
			Fossil Fuel Energy Requirement 10^3 Kcal/MT											
			--	--	--	--	--	--	--	--	--	--	76	106
			Total Fuel Requirement by Source (10^6 Kcal): Chicken											
20.	All Sources		--	--	306	--	--	--	--	--	--	--	1559	2263
	Percent		--	--	7.4	--	--	--	--	--	--	--	37.8	54.8
		Fertilizer	--	--	306	--	--	--	--	--	--	--	--	--
		Diesel	--	--	--	--	--	--	--	--	--	--	125	318
		Gasoline	--	--	--	--	--	--	--	--	--	--	78	204
		Propane	--	--	--	--	--	--	--	--	--	--	94	113
		Fuel Oil	--	--	--	--	--	--	--	--	--	--	--	--
		Kerosene	--	--	--	--	--	--	--	--	--	--	31	--
		Oil & Grease	--	--	--	--	--	--	--	--	--	--	16	23
		Crude Oil	--	--	--	--	--	-	--	--	--	--	--	--
		Electricity	--	--	--	--	--	--	--	--	--	--	1215	1605
		Charcoal	--	--	--	--	--	--	--	--	--	--	--	--
		Wood	--	--	--	--	--	--	--	--	--	--	--	--

[1/] Includes large and medium storage, off-farm processing, and direct farm marketings, all categorized by X-port Mode.

TABLE D-18

CONTINUED FOR CHICKEN

INPUT			OUTPUT: Consumption							
			Rural I&II[2/] (13)	Strata I (14)	Strata II (15)	Strata III (16)	Strata IV (17)	Exports (18)	Losses (19)	Inventory (20)
1.	Product. Techn.	High	--	--	--	--	--	--	--	--
2.		Medium	--	--	--	--	--	--	--	--
3.		Low	--	--	--	--	--	--	--	--
4.	Transportation	Motor	--	--	--	--	--	--	--	--
5.		Animal	--	--	--	--	--	--	--	--
6.		Human	--	--	--	--	--	--	--	--
7.	Processing	On-farm	--	--	--	--	--	--	--	--
8.		Small	--	--	--	--	--	--	--	--
9.		Med & Large	--	--	--	--	--	--	--	--
10.	Market. & Storage	On-farm	--	--	--	--	--	--	--	--
11.		Small	6.2	18.5	92.5	88.4	--	--	--	--
12.		Med & Large	6.4	19.2	96.2	92.0	--	--	--	--
13.	Households	Rural I & II	--	--	--	--	--	--	--	--
14.		Strata I	--	--	--	--	--	--	--	--
15.		Strata II	--	--	--	--	--	--	--	--
16.		Strata III	--	--	--	--	--	--	--	--
17.		Strata IV	--	--	--	--	--	--	--	--
18.	Imports/Exports		--	--	--	--	--	--	--	--
19.	Losses		--	--	--	--	--	--	--	--
			Fossil Fuel Energy Requirement 10^3 Kcal/MT							
			--	--	--	--	--	--	--	--

Total Fuel Requirement by Source (10^6 Kcal): Chicken

		Total	Percent	Total Percent
20.	All Sources Percent	4128	100	
	Fertilizer	306	7.4	
	Diesel	443	10.7	
	Gasoline	282	6.8	
	Propane	207	5.0	
	Fuel Oil	--	--	
	Kerosene	31	.8	
	Oil & Grease	39	.9	
	Crude Oil	--	--	
	Electricity	2820	68.4	
	Charcoal	--	--	
	Wood	--	--	

[2/] Includes family consumption, rural direct sales and payments in kind.

TABLE D-19

RAW PRODUCT INPUT/OUTPUT TABLE FOR PORK (10^2 MT)

Total Energy Output Values for Each Output Stage (10^6 Kcal)

INPUT			OUTPUT: On-farm Production			Primary Transport Storage			Processing			Marketing and Storage		
			High Tech. (1)	Medium Tech. (2)	Low Tech. (3)	Motor[1/] (4)	Animal[1/] (5)	Human[1/] (6)	On-farm Storage (7)	Small (8)	Med & Large (9)	On-farm (10)	Small (11)	Med & Large (12)
1.	Product. Techn.	High	--	--	--	--	--	--	--	--	--	--	--	--
2.		Medium	--	--	--	--	--	--	--	--	--	--	--	--
3.		Low	--	--	--	--	169.8	--	--	--	--	--	--	--
4.	Transportation	Motor	--	--	--	--	--	--	--	--	--	--	--	--
5.		Animal	--	--	--	--	--	--	--	6.8	38.6	--	61.0	63.4
6.		Human	--	--	--	--	--	--	--	--	--	--	--	--
7.	Processing	On-farm	--	--	--	--	--	--	--	--	--	--	--	--
8.		Small	--	--	--	--	--	--	--	--	--	--	3.3	3.5
9.		Med & Large	--	--	--	--	--	--	--	--	--	--	18.8	19.6
10.	Market. & Storage	On-farm	--	--	--	--	--	--	--	--	--	--	--	--
11.		Small	--	--	--	--	--	--	--	--	--	--	--	--
12.		Med & Large	--	--	--	--	--	--	--	--	--	--	--	--
13.	Households	Rural I & II	--	--	--	--	--	--	--	--	--	--	--	--
14.		Strata I	--	--	--	--	--	--	--	--	--	--	--	--
15.		Strata II	--	--	--	--	--	--	--	--	--	--	--	--
16.		Strata III	--	--	--	--	--	--	--	--	--	--	--	--
17.		Strata IV	--	--	--	--	--	--	--	--	--	--	--	--
18.	Imports/Exports		--	--	--	--	--	--	--	--	--	--	--	--
19.	Losses		--	--	--	--	--	--	--	--	--	--	--	--
			Fossil Fuel Energy Requirement 10^3 Kcal/MT											
			--	--	--	--	--	--	--	4709	2628	--	76	106
			Total Fuel Requirement by Source (10^6 Kcal): Pork											
20.	All Sources		--	--	775	--	--	--	--	3202	10142	--	630	915
	Percent		--	--	4.9	--	--	--	--	20.4	64.7	--	4.0	5.8
		Fertilizer	--	--	775	--	--	--	--	--	--	--	--	--
		Diesel	--	--	--	--	--	--	--	96	2437	--	50	128
		Gasoline	--	--	--	--	--	--	--	--	--	--	31	82
		Propane	--	--	--	--	--	--	--	416	811	--	38	46
		Fuel Oil	--	--	--	--	--	--	--	--	507	--	--	--
		Kerosene	--	--	--	--	--	--	--	--	--	--	13	--
		Oil & Grease	--	--	--	--	--	--	--	--	--	--	6	9
		Crude Oil	--	--	--	--	--	--	--	--	--	--	--	--
		Electricity	--	--	--	--	--	--	--	640	1623	--	492	650
		Charcoal	--	--	--	--	--	--	--	768	1723	--	--	--
		Wood	--	--	--	--	--	--	--	1282	3041	--	--	--

[1/] Includes large and medium storage, off-farm processing, and direct farm marketings, all categorized by X-port Mode.

TABLE D-19

CONTINUED FOR PORK

INPUT			OUTPUT Consumption							
			Rural I&II[2/] (13)	Strata I (14)	Strata II (15)	Strata III (16)	Strata IV (17)	Exports (18)	Losses (19)	Inventory (20)
1.	Product. Techn.	High	--	--	--	--	--	--	--	--
2.		Medium	--	--	--	--	--	--	--	--
3.		Low	5.2	--	--	--	--	--	--	--
4.	Transportation	Motor	--	--	--	--	--	--	--	--
5.		Animal	--	--	--	--	--	--	--	--
6.		Human	--	--	--	--	--	--	--	--
7.	Processing	On-farm	--	--	--	--	--	--	--	--
8.		Small	--	--	--	--	--	--	--	--
9.		Med & Large	--	--	--	--	--	--	0.2	--
10.	Market. & Storage	On-farm	--	--	--	--	--	--	--	--
11.		Small	--	3.6	10.0	43.5	25.6	--	0.3	--
12.		Med & Large	--	3.7	10.4	45.3	26.6	--	0.3	--
13.	Households	Rural I & II	--	--	--	--	--	--	--	--
14.		Strata I	--	--	--	--	--	--	--	--
15.		Strata II	--	--	--	--	--	--	--	--
16.		Strata III	--	--	--	--	--	--	--	--
17.		Strata IV	--	--	--	--	--	--	--	--
18.	Imports/Exports		--	--	--	--	--	--	--	--
19.	Losses		--	--	--	--	--	--	--	--
			Fossil Fuel Energy Requirement 10^3 Kcal/MT							
			--	--	--	--	--	--	--	--

Total Fuel Requirement by Source (10^6 Kcal): Pork

		Total	Percent	Total Percent
20.	All Sources Percent	15664	100	
	Fertilizer	775	4.9	
	Diesel	2711	17.3	
	Gasoline	113	.7	
	Propane	1311	8.4	
	Fuel Oil	507	3.2	
	Kerosene	13	.1	
	Oil & Grease	15	.1	
	Crude Oil	--	--	
	Electricity	3405	21.8	
	Charcoal	2491	15.9	
	Wood	4323	27.6	

[2/] Includes family consumption, rural direct sales and payments in kind.

APPENDIX E

MISCELLANEOUS DATA AND CONVERSION FACTORS

The following price and conversion factors form some of the basis for various tables in the main body of the report. Also compare Appendix Table F-3.

TABLE E-1

AVERAGE PRICES USED IN CALCULATIONS FOR ECONOMIC EFFICIENCY RATIOS

Crop	Price $RD
1. Rice	234.8/ton[a]
2. Corn	114.8/ton
3. Beans	579.2/ton
4. Sweet Potato	94.6/ton
5. Potato	229.0/ton
6. Cassava	109.0/ton
7. Sugar	7.4/ton in cane
8. Onion	389.6/ton
9. Tomato	154.0/ton
10. Plantain & Banana	0.5/unit
11. Peanuts	300.0/ton
12. Coffee	302.9/ton
13. Cacao	2,277.8/ton
14. Tobacco	589.6/ton

[a]Tons are metric tons.
Source: Republica Dominicana en Cifras, 1979.

TABLE E-2

VALUES USED TO CALCULATE THE ENERGY CONTENT OF CROPS

Crop	Kcal per Kilogram
Rice	3,700
Sweet Potato	1,000
Onion	360
Beans	3,430
Corn	3,525
Peanuts	5,500
Potato	770
Tomato	220
Cassava	3,300
Cacao	3,020
Coffee	335
Sugar Cane	316
Banana	3,400
Plantain	3,400

Sources: Composition of Foods, Agricultural Handbook No. 8, USDA, 1963; Nutritive Value of Foods, Home and Garden Bulletin No. 72, USDA; Valor Nutrivo de los Alimentos, Instituto Nacional de la Nutricion, Mexico, 1971.

TABLE E-3

FACTORS USED IN CALCULATING FUEL USAGE

FROM AMOUNT OF LAND WORKED

Activity	Liters Diesel Fuel per Hectare
1. Preparing Soil	10.01
2. Planting	4.67
3. Fertilizer Application	6.08
4. Pesticide Application	0.94
5. Harvesting	11.98
6. Cultivating, Weeding, etc.	2.35

Source: Calculations made from Power and Machinery Handbook, John Deere Corporation.

APPENDIX F

DATA FOR ESTIMATING RATES OF CHANGE IN ENERGY UTILIZATION IN FOOD PROCESSING INDUSTRIES

The basic data for the main table in this appendix are from the Oficina Nacional de Estadistica, Extadistica Industrial de la Republica Dominicana, Nos. 22, 23, 24 cuadro (table) VII, Energia Electrica, Combustibles, y Lubricantes Consumidos en la Industria, Durante los Años 1973-1977. The energy sources classified include charcoal, firewood, electricity, fuel-oil, diesel, gasoline, kerosine, crude petroleum and begasse [sugar refining only]. The 13 industrial classifications selected for trend analysis are shown in Table H-1. Our assumption is that the trend in energy consumption is a reflection of changing technology in agricultural product processing.

The method employed was to sum all the energy quantities after volumes and units reported were converted to total Kcal (see Table F-3). The total divided by the quantity of product processed equals the energy input/MT. For example, in Table F-1, code 3111, meat processing, shows 6,460 tons of meat processed in 1973. The sum of energy equivalents in 10^6 Kcal was 7,864 in the same year. Therefore, the energy input/MT equaled 1.2173×10^6 Kcal.

Simple regressions of trends in these calculated ratios against the period 1973-1977 created equations that could be used to project the trends to the 5 target years. These equations, plus the projection results, are shown in Table F-2. (Note that projections were also made for 1978.) In certain cases the regression results were ignored because there was little observable trend in the basic data (other product manufacturing–3121) or the coefficient of determination was judged to be acceptable. Of the 13 industrial classifications studied, only 1, 2, 3, 4, 5, 7, 8 and 13 were used in the main body of the study.

The final step was to compute the changes in projected energy input ratios over the 1978 values. Thus for category 1, meat processing, the changes between 1978 and 1980 equaled 1.791/1.6955 or 1.0563. The values for other years, 1985-2000, are transferred to Table IV-7 of the main text as "correction factors" (1.0563 is written as .0563). The trends in total energy input to food processing categories are assumed to roughly reflect fossil energy trends only. The trends in industrial use are assumed to reflect trends in handling and storage as well.

TABLE F-1

TRENDS IN FOOD PROCESSING ENERGY UTILIZATION COEFFICIENTS

#	Industrial Sector	Industry Code	1973			1974			1975			1976			1977		
			Tons Output	10^6 Kcal Input	10^6 Kcal Coefficient	Tons Output	10^6 Kcal Input	10^6 Kcal Coefficient	Tons Output	10^6 Kcal Input	10^6 Kcal Coefficient	Tons Output	10^6 Kcal Input	10^6 Kcal Coefficient	Tons Output	10^6 Kcal Input	10^6 Kcal Coefficient
1	Processing & Storage – Meat	3111	6,460	7,864	1.2173	8,061	8,752	1.0856	6,457	8,586	1.3296	10,027	14,549	1.4098	11,241	17,161	1.5315
2	Processing - Milk Products	3112	35,563	12,756	0.3587	48,728	21,318	0.4375	56,527	26,595	0.4705	61,013	34,768	0.5698	79,344	43,598	0.5498
3	Canning/ Storage - Fruit & Veg.	3113	19,268	23,110	1.1994	29,899	75,512	2.5255	29,680	60,926	2.0528	25,809	47,452	1.8308	27,637	47,981	1.7361
4	Mfg. Edible Oil - Veg. & An.	3115	92,690	122,122	1.3175	72,852	85,349	1.1715	68,137	80,600	1.1829	81,918	104,813	1.2795	90,086	117,164	1.3006
5	Milling - Flour Products	3116	303,540	92,660	0.3053	306.853	90,371	0.2945	314,900	65,193	0.2070	375,164	66,170	0.1764	319,615	69,140	0.2163
6	Bread, Noodles, Pasta	3117	34,595	63,891	1.8468	38,335	86,030	2.244	86,172	205,634	2.3863	90,113	282,141	3.1310	99,096	328,639	3,3164
7	Sugar Refining	3118	1,387,489	1,918,070	1.3824	1,425,873	1,566,184	1.0984	1,397,589	1,895,339	1.3562	1,514,885	1,395,573	0.9212	1,527,214	715,009	0.4682
8	Chocolate & Candy Mfg.	3119	11,461	12,746	1.1121	10,706	13,547	1.2653	11,181	13,951	1.2478	11,323	12,680	1.1198	10,626	15,456	1.4544
9	Other Food Product Processing	3121	8,451	11,996	1.4190	9,130	19,101	2.0920	9,673	14,219	1.4699	11,269	14,987	0.4155	12,127	17,000	1.4018
10	Animal Feed Processing	3122	73.388	2,376	0.0324	69,372	2,134	0.0308	101,266	6,272	0.6193	96,247	3,709	1.3299	101,094	3,328	0.0329
11	Brewery Products	3133	48,394	34,165	0.7060	48,511	33,406	0.6886	44,457	30,006	0.6749	47,544	35,073	0.03044	64,723	46,383	0.1660
12	Soft Drinks	3134	90,596	12,845	0.1418	95,605	10,290	0.1076	85,547	15,312	0.1790	84,889	15,875	0.7380	99,871	16,218	0.1624
13	Tobacco	3140	12,361	7,872	3.2924	2,116	6,937	3.2781	1,773	6,504	3.6686	1,899	6,840	0.1870	1,714	5,288	3.0851

Source: Coefficients calculated from outputs and energy inputs as reported in: ONE, Estadistica Industrial de la Republica Dominicana, Vols. 22, 23, 24, Cuadro VII.

TABLE F-2

PROJECTIONS OF TRENDS IN FOOD PROCESSING ENERGY UTILIZATION PER TON OF OUTPUT, 1973-1977

Industry # and Industrial Products	Projection Equations				Forecast Estimates of Energy per Ton					
	Type	R^2	a	b	1978	1980	1985	1990	1995	2000
1 Meat	L	.77	1.0291	0.0952	1.696	1.791	2.672	2.743	3.330	3.696
2 Milk	L	.90	0.32	0.05	0.670	0.734	0.991	1.248	1.505	1.762
3 Fruit/Veg.	(Assume 1.6 Lowest)				1.8	1.8	1.75	1.7	1.65	1.6
4 Veg. Oil	(no regression)				1.25	1.3	1.35	1.4	1.45	1.5
5 Milling	(no regression)				0.192	0.21	0.22	0.23	0.24	0.25
6 Bakery	P	.92	1.777	0.3669	3.450	3.811	4.554	5.132	5.615	6.035
7 Sugar	(Est. 1.0 constant)				1.0	1.0	1.0	1.0	1.0	1.0
8 Chocolate	L	.38	1.078	0.054	1.456	1.51	1.78	2.05	2.319	2.588
9 Other Food	(no regression)				1.40	1.42	1.45	1.50	1.55	1.60
10 Animal Feed	(no regression)				0.033	0.033	0.033	0.033	0.033	0.033
11 Brewing	(no regression)				0.85	0.50	0.50	0.50	0.50	0.50
12 Soft Drinks	L	.36	.11937	.01206	0.204	0.216	0.276	0.337	0.397	0.457
13 Tobacco	(no regression)				3.5	3.55	3.6	3.65	3.7	3.75

TABLE F-3

KILOCALORIE CONVERSION FACTORS FOR VARIOUS FUEL TYPES AND ENERGY SOURCES

Energy Type	Unit of Measure	Kcal/Unit
Animal Power	Day	4490.
Begasse	Metric Ton	1.672×10^6
Charcoal	Kilogram	6650.
Crude Oil	Liter	9068.
Diesel Fuel	Liter	9329.
Electrical Energy	Kilowatt Hour	860.
Fuel Oil	Liter	9329.
Gasoline	Liter	8266.
Grease	Kilogram	10980.
Kerosine	Liter	8884.
Lubricating Oil	Liter	9862.
Man Power	Day	641.
Propane	Kilogram	12015.
Wood	Metric Ton	4.158×10^6

Sources: A Preliminary Assessment of Energy Supply and Consumption in the Dominican Republic, Brookhaven National Laboratory, Appendix D, 1979; Food, Energy and Society, Halsted Press, David and Marcia Prinentel, 1979.

APPENDIX G

DATA FOR PROJECTING DOMESTIC HUMAN DEMAND FOR SELECTED AGRICULTURAL PRODUCTS IN THE DOMINICAN REPUBLIC

The basic data necessary are expected changes in real income per capita or per family, income elasticity of demand estimates for the various agricultural products, estimates of current per capita consumption per period of time and expected changes in population.

Table G-1 shows population estimates 1925-1980 as reported by the National Statistical Office (ONE). Population is expected to grow at exponential rates and the model, $P = Ae^{bx}$, fits quite well. In this model the rate of growth, b, is estimated directly. The long term rate of DR population growth is 2.963%.

Table G-2 shows real income per capita with projections to the target years, 1980-2000. The time series of real disposable income per capita permits us to calculate the expected rates of increase in incomes into the future. We expect growth trends, *a priori*, to be exponential and the model $Y = Ae^{bx}$ fits quite well. The "growth factors" are equal to $\frac{Y_t}{Y_o}$, where Y_o (1977) = 501 and Y_t selected target year. Thus, $\frac{Y_{1980}}{Y_{1977}} = \frac{591}{501} = 1.212$.

Table G-3 shows per capita consumption of various food products as reported in Seaplane. These data are only divided into four income level categories, but they do permit calculations of some income elasticity coefficients. Due to the absence of degrees of freedom, no doubt a substantial percentage of the coefficients is not statistically significant. However, the results are the best available. All of the estimations are based on simple regression models, linear in logrithms ($l_n h = a + blax$) where y equals the consumption value and x = the mid-poind of each income strata, i.e., 25, 50, 150, 600 RD$/month.

TABLE G-1

TIME SERIES OF DR POPULATION GROWTH AND PROJECTIONS TO YEAR 2000

(1,000 Persons)

	Time Series											Projections X 10^3			
Year	1925	1935	1940	1945	1950	1955	1960	1965	1970	1975	1980	1985	1990	1995	1000
Population	1,054.7	1,479.4	1,674.4	1,888.9	2,135.8	2,554.2	3,047.1	3,512.9	4,009.5	4,696.8	5,430.9	6,283.8	7,287.2	8,450.96	9,800.5
t	t_1	t_{11}	t_{16}	t_{21}	t_{26}	t_{31}	t_{36}	t_{41}	t_{46}	t_{51}	t_{56}	t_{61}	t_{66}	t_{71}	t_{76}

Projection equation: R^2 998, a 1030.94, b 0.029631, when $P = ae^{bx}$, X equals 1925-1980

Source: Based on Table 211-04, ONE, Republica Dominicana en Cifras, 1980.

TABLE G-2

ESTIMATED REAL INCOME/CAPITA – 1978-2000

													Projections				
												12	14	19	24	29	34
Year	1967	1968	1969	1970	1971	1972	1973	1974	1975	1976	1977	1978	1980	1985	1990	1995	2000
Estimated Disposable Income	319	313	342	359	384	411	444	478	514	489	501	483	594	757	964	1227	1563
Growth Factors											1000		1.212	1.545	1.967	2.504	3.190

Projection equations: R^2 .91 a 301.97 b 0.048 where $Y = ae^{bx}$, X = 1967 - 1978.

Source: ONE, Republica Dominicana en Cifras, Table 342-02, Cuentas Nacionales, 1978; Table 342-02, Cuentas Nacionales, 1980.

TABLE G-3

CALCULATION OF INCOME ELASTICITY OF DEMAND COEFFICIENTS

(Per Capita Consumption in Lbs/Day; Income in $RD/Month)

Alimentos	Estrato I Hasta 50	Estrato II 50.1-100	Estrato III 100.1-300	Estrato IV 300.1-mas	Promedio Ponderado	R^2	a	n b
Cereales								
Arroz	0.233	0.331	0.386	0.409	0.297	.78	4.05	.1607
Pastas	0.012	0.018	0.025	0.028	0.017	.869	.7887	.2557
Pan	0.039	0.081	0.115	0.125	0.069	.7648	1.8458	.3345
Avena	0.003	0.005	0.005	0.007	0.004	.8185	-.4985	.2280
Harina de Maiz	0.012	0.006	0.003	0.001	0.008	.9952	3.8676	-.762
Harina de Trigo	0.004	0.001	0.003	0.019	0.004	.5180	-2.5720	.6304
Raices								
Batata	0.102	0.082	0.041	0.040	0.082	.8477	4.5734	-.3178
Name	0.031	0.029	0.027	0.020	0.029	.9298	2.883	-.1344
Papa	0.031	0.025	0.025	0.089	0.027	.5845	1.0304	.3348
Yautia	0.031	0.029	0.026	0.023	0.029	.9992	2.7275	-0.0942
Yuca	0.290	0.190	0.150	0.110	0.227	.9421	5.4742	-0.2859
Azucar								
Azucar Refina	0.041	0.112	0.150	0.246	0.092	.8617	1.3858	.5056
Leguminosas								
Habichuelas	0.049	0.062	0.060	0.071	0.056	.7704	2.6369	0.0969
Guandul	0.008	0.006	0.005	0.004	0.007	.9517	1.6644	-0.2062
Otras	0.004	0.005	0.006	0.008	0.025	.9878	-0.2646	.2101
Hortalizas								
Auyama	0.011	0.008	0.006	0.005	0.009	.9391	5.5986	-1.0908
Cebolla	0.007	0.010	0.012	0.014	0.009	.8823	.3989	.2020
Tomate	0.008	0.023	0.038	0.040	0.019	.7318	-0.0071	6.4606
Otras	0.079	0.142	0.174	0.237	0.123	.8813	2.5279	.3134
Legas								
Aguacate	0.023	0.032	0.043	0.051	0.031	.9248	1.4419	.2425
Quineo	0.048	0.060	0.072	0.120	0.050	.9773	1.9604	.2782
Platano	0.302	0.375	0.416	0.428	0.350	.7726	4.4596	.1002
Mungo	0.131	0.137	0.141	0.231	0.140	.8100	3.2401	.1723
Pina	0.003	0.012	0.024	0.028	0.040	.7682	-1.4677	.6437
Lechosa	0.001	0.010	0.011	0.012	0.006	.5246	-2.1156	.6265
Citricos	0.018	0.026	0.035	0.039	0.024	.8730	1.2528	.2333
Carne de Pollo	0.010	0.022	0.066	0.150	0.033	.9787	-1.3026	.8508
Carne de Res								
Bola Limpia	0.004	0.005	0.023	0.032	0.010	.9008	-1.9489	.7207
Cadera	0.007	0.008	0.020	0.027	0.011	.9279	-0.5777	.4637
Grillada	0.004	0.010	0.015	0.019	0.009	.8172	-.7442	.4470
Pecho	0.004	0.016	0.030	0.050	0.015	.9966	-0.0814	.4759
Roti y Otras	0.002	0.003	0.007	0.020	0.004	.9981	-2.7248	.7337

TABLE G-3 (Continued)

Alimentos	Estrato I Hasta 50	Estrato II 50.1-100	Estrato III 100.1-300	Estrato IV 300.1-mas	Promedio Ponderado	R^2	a	b
Carne de Cerdo	0.002	0.006	0.018	0.032	0.008	.9279	-2.7458	.8519
Otros	0.004	0.007	0.011	0.009	0.006	.5942	-0.1540	.2434
Carne de Pescado						.9364	-4.5391	0.7889
Leche Fresca	0.111	0.394	0.609	0.622	0.308	.6714	2.6578	.4784
Oleaginosas	0.043	0.062	0.083	0.127	0.060	.9838	1.7617	.3276
Huevos	0 001	0.004	0.010	0.031	0.005	.9573	-3.9759	1.0246

Fuente: SEAPLAN.

Estimating equation: $\ln y = a + b \ln X$, where y = consumption quantities, X = midpoint of income classification; $b = \eta$ (income elasticity).

PART VI

BIBLIOGRAPHY

BIBLIOGRAPHY

I. Energy General

Published Reports and Documents

I-2 McGrananhan, G., Mitchell, G., Mubayi, V., and Stern, R., A Preliminary Assessment of Energy Supply and Consumption in the Dominican Republic (Draft), Brookhaven National Laboratory, National Center for Analysis of Energy Systems, Division of Regional Studies (November 1979). 87 pages in English.

This working paper is a valuable source, independent of the final product analyzing the Food System in the Dominican Republic. Appendix 3 provides crop by crop estimates of energy use based on indirect estimating relationships not validated in the DR. The PCI analysis will provide empirical data for estimating relationships that are validated for the Dominican Republic.

II-10 FIDE, Politica Crediticia del Fondo de Inversiones para el Desarrollo Economico (FIDE) ... Santo Domingo, 1979. 33 pages in Spanish.

The Credit Policies of the Fund for Investments in Economic Development (FIDE) ... explicitly authorizes loans on attractive terms for energy saving and conservation. A "Modification to the Regulations of FIDE" was made subsequently to encourage small borrowers to use FIDE credit. (3 pages in Spanish) Making credit available and not lead to placing credits for energy improvement activities after a year (in March, 1980).

II-11 INDOTEC, Informe Anual 1978, Santo Domingo, 1979. 55 pages in Spanish.

The annual report of INDOTEC (Instituto Dominicano de Technologia Industrial) describes briefly all the diverse activities of INDOTEC in the energy field and in other areas.

II-7 CDE, Energia, 30 pages per issue, Santo Domingo.

A house organ for the Dominican Electricity Corporation, published quarterly beginning in Spring, 1977. Many articles on energy appear on topics such as "Potential Sources of Energy," "Bioconversion," the Agro-Forestry Department of CDE, "Solar Energy," "Windmills," etc.

II-20 ONAPLAN, Posibiliades -el Sector Energetico, PLANDES 28, 1978 Secretariado Technico de la Presidencia, Oficina Nacional de Planificacion. 116 pages in Spanish.

Possibilities of the Energy Sector This is a basic document widely used as a point of departure for other more recent analysis.

2. T.V. Long, "The Rational use of Energy in the Dominican Republic," report to the Inter-American Development Bank, 22 May 1979.

3. Roberto Liz et al., "Evaluacion de la Situation Energetica National," Banco Central de la Republica Dominicana, Santo Domingo, 1978.

II-32 World Bank, Caribbean Energy Survey (Report 2511-CRB), May 7, 1979. 61 pages in English.

Permission has not been obtained from the World Bank to disclose the contents of this report but it is not necessary for understanding the food/agriculture sector of the Dominican Republic.

III-10 Palmedo, Philip F., Nathans, Robert, Beardsworth, Edward, and Hale Samuel, Jr., Energy Needs, Uses and Resources in Developing Countries Brookhaven National Laboratory, National Center for Analysis of Energy Systems, Policy Analysis Division, Upton, New York, March 1978. 143 pages in English (BNL 50784).

A broad perspective analysis of the energy problems of developing countries and opportunities for effective assistance activities.

II-12 French Ministry of Cooperation, New Energy for Development, "Technology and Development" Series, 1978. 67 pages in English.

A general book on non-conventional energy sources for developing countries.

II-3 Comision Nactional de Politica Energetica, Programa de Trabajo de la Secretaria Ejecutiva, Santo Domingo, 1980 40 pages in Spanish.

The Workplan for the Executive Secretariat of the Energy Commission summarizes the 1980 activities anticipated for the Energy Commission.

II-4 Corporacion Dominicana de Electricidad, Plan de Expansion del Sistema Electrico de la C.D.E. 1979-1992 Dominican Republic, 1979. 5 volumes in Spanish.

Plan of Expansion for the Electric System of CDE 1979-1992 is the translated title of this five volume series of studies. The volumes available in December, 1979 were circulated for comments and will be revised by June, 1980. CDE was assisted

by SOFRELEC (Societe Francaise d'Etudes et de Realisations d'Equipements Electriques), a French consulting firm. Volume I is The Market for Energy, Synthesis and Completion of Studies. 163 pages in Spanish. The 1979 edition reflects World Bank comments on the original work. It is directed to international lenders. Volume II is The Current System and Energy Resources. 261 pages in Spanish. Volume III is Hydroelectric Utilization, Valley of the Yaque del Norte. Approximately 250 pages including 7 major annexes in Spanish. Volume IV is Utilization of the Yaque Sur, of the Yuna, and Diverse Zones. Approximately 250 pages in Spanish. Volume V is Hydroelectric Utilization, Base Prices. Approximately 50 pages in Spanish.

The substance of the master plan is summarized briefly in the Institution Factors section on CDE.

The projections for supply and demand were made before Hurricane David. The damage is taken into account by assuming that the demands previously projected would be retarded by one or two years.

The CDE expansion plan includes a major increase in electricity service to rural areas. Rural consumption is projected to increase from 205Gwh in 1979 to 1,261 Gwh in 1992. The rural residential consumption component is projected to increase from 180 Gwh to 649 Gwh.

For mechanization of agricultural installations, energy from the grid is projected to grow from 6 Gwh to 400 Gwh. After 1985, half the new equipment is expected to use non-conventional energy (e.g. solar, biogas, etc.) with energy not coming from the grid of 168 Gwh by 1992. Electricity consumption for irrigation and for tourism complexes are projected to go from 26 to 260 Gwh.

II-9 Da Silva Leonardo, "Non-Conventional Renewable Energy Sources: Solar Ponds," Interamerican Development Bank, undated, probably 1980. 10 pages in English.

This discussion paper draws extensively on the technical aspects of a report by Harry Z. Tabor for IADB for the development and implementation of a solar energy investigation program in the Dominican Republic.

II-14 INDRHI, Inventorio de Proyectos Hidroelectricos, December 1979 and March 1980. Santo Domingo, 1980. 4 pages in Spanish.

An Inventory of Hydroelectric Projects including 82 sites in the Dominican Republic. The list includes notations regarding the allocation of responsibilities for each site among CDE, INDRHI, and Rumania.

II-15 INDHRI, Estatuto Legal y Reglamentario. Santo Domingo 1971. 100 pages in Spanish.

The National Institute for Hydraulic Resources has collected together the legal documents that guide it.

II-30 Tavares Espaillat, Ing. Manuel, "Balance Energetico: Valor y Viabildad de las Alternativas," a presentation by the Secretary of Industry and Commerce to a Seminar-Workshop of ALIDE on "Credit as a Factor in the Evaluation of Energy Projects." Santo Domingo, March, 1980. 11 pages plus annexes in Spanish.

Energy Balance: The value and Viability of the Alternatives. This presentation summarizes the energy situation of the Dominican Republic from the point of view of the President of the Energy Commission. It is addressed towards a group of development bankers interested in the opportunities for and constraints on using credit to bring about changes in the energy situation.

III-6 INDOTEC, Investigacion Bibliografica Sobre Ahorro y Conservacion de Energia, prepared by Ing. Joaquin Gerardo Santaella, October 1979. ___ pages in Spanish.

120 works on Energy Conservation available at INDOTEC's Data Bank; many items are Dominican and potentially useful.

SEH Costs of Production Studies

"Costos Producción por Tarea (Jaula), Según Componentes en la Zona de San José de Ocoa." (Table.)

"Costo de producción de una tarea de habichuelas en la Región Sur." (Table)

"Costos de Producción por Tarea en el Cultivo de la Cebolla, Según Grupos de Factores. Región Sur, Febrero 1974." (Table.)

"Costos de Producción por Tarea de Cebolla Amarilla en la Zona de San Cristobal y Baní. Octubre 1974. Cuadro No. 1." (Table.)

"Costos Producción por Tarea de Cebolla Amarilla en la Zona de San Cristobal y Baní. Octubre 1974. Cuadro No. 1-A." (Table.)

"Costos Producción por Tarea de Cebolla Amarilla en la Zona de San Cristobal y Baní. Octubre 1974. Cuadro No. 2." (Table.)

"Costos Producción por Tarea de Cebolla Amarilla en la Zona de San Cristobal y Baní. Octubre 1974. Cuadro No. 2-A." (Table.)

"Costos, Rendimientos e Ingresos por Tarea en el Cultivo de la Cebolla. Región Sur, Febrero 1974. Cuadro No. 2." (Table.)

"Costos, Rendimientos e Ingresos por Tarea en el Cultivo de la Cebolla. Región Sur, Febrero 1974. Cuadro No. 3." (Table.)

"Composición Porcentual de los Costos de Producción de la Papa, Según Componentes en la Zona de San José de Ocoa." (Table.

"Estadística de Importaciones." (Table.)

"Incidencia de los Precios de Compra de QQ. de Papa al Agricultor. Cuadro No. 4." (Table.)

"Incidencia de los Precios de Compra de QQ. de Papa Al Agricultor. Cuadro No. 5." (Table.)

"Incidencia Porcentual de los Componentes de los Costos de Producción por Tarea, Constanza." (Table.)

"Número de Labores Realizados y Valor por Tarea (en RD$) en el Cultivo de Cebolla. Región Sur, Febrero 1974." (Table)

"Precios Promedios al por Mayor de Habichuelas Roja Criollas. Santo Domingo, 1974." (Table.)

"Precios Promedios al Detalle de Habichuelas Roja Criollas en Santo Domingo, 1973-1974." (Table.)

"Precios Promedios en la Ciudad de Santo Domingo, 1961-1968 y 1969-1970." (Table.)

"Precios Promedios al Detalle de Productos Agropecuarios Comercializados en Santo Domingo 1973." (Table.)

"Provincias Productoras de Arroz y Cantidad Cosechada en el Periódo Enero-Diciembre 1973." (Table.)

"Superficie Sembrada, Producción Total y Valor Total de la Producción Cebolla. Región Sur, Febrero 1974." (Table.)

"Tareas Cosechadas y Producción Obtenida de Arroz, Según Municipios en el Periódo Enero-Diciembre 1973." (Table.)

"Tareas Cosechadas y Producción Obtenida de Arroz, Según Zonas en el Periódo Energo-Diciembre 1973." (Table.)

"Uso por Tarea de Algunos Insumos en el Cultivo de la Cebolla. Región Sur, Febrero 1974." (Table.)

"Volumen de la Producción de Algunos Productos Agrícolas, 1960-1971." (Table.

All of the above listings are various statistical tables and papers relating to production costs and market prices of different agricultural products in the Dominican Republic.

Oficina Nacional de Estadística:

"Valor de las Ventas al Detalle, 1960-1972." (Table.)

"Valor de las Ventas al por Mayor por Provincias. Enero-Diciembre 1972." (Table.)

The above listings are statistical tables relating to wholesale and retail sales in the Dominican Republic from 1960 through 1972.

Miscellaneous Loose Papers and Tables

Banco Agrícola de la Republica Dominicana:

"Costo Promedio de Producción de la Hectarea por Cultivos. Junio de 1974." (Table.)

A statistical table on average production costs of a large number of majors crops. This table could be very useful in generating technical (I/O) coefficients for LP models.

Instituto de Estabilización de Precios:

"Aspectos Analíticos--Habichuelas." (Paper.)

"Costo de Producción por Tarea de la Cebolla, Según Componentes en la Zona de Constaza." (Table.)

2. Energy in Agricultural/Forestry Production, Food Processing and Consumption

II-2 Antonini, Gustavo A., Ewel, Katherine C., and Tupper, Howard M., Population and Energy, a Systems Analysis of Resource Utilization in the Dominican Republic, University Presses of Florida, 1975. Approximately 165 pages. English.

An English language analysis with a case study about Las Placetas in the area near the Bao and Tavera Dams. The book simulates changes in land use and population as driven by changes in energy flow. Water management, forestry management, land use policies are central to the analysis.

II-17 INDRHI, La Gaceta de INDRHI, Organo Informative de INDRHI, Spanish.

House Journal for INDRHI. Year 2, No. 7 is dated July 1978, articles on irrigation and agriculture.

II-18 Jennings, Penelope and Ferreiras, Benito A.; Recursos Energeticos de Bosques Secos en la Republica Dominicana, Centro de Investigaciones Economicas y Alimenticias, Instituto Superior de Agricultura (Santiago D.R.) July, 1979. 119 pages in Spanish.

This study deals with The Energy Resources of the Dry Forests in the Dominican Republic. It covers energy from firewood and charcoal from the dry forests of the Dominican Republic and the channels for commercialization to the final consumers in rural and urban areas. Demand and potential supply are estimated including methods for processing, efficiency, benefits, and costs.

The study concludes that wood and charcoal from the dry forests can and should make an important contribution to the energy needs of the poor rural and urban families.

The authors conclude that non-viable cut and slash farmers could successfully live from using the forest as a source of renewable resources (p. 63). They recommend use of the forests for sustained production of wood and fuel, with proper management to avoid irreversible destruction. Projects include: controlling indiscriminate grazingg prohibiting the cutting of forests for dry agriculture, organizing campesinos in dry unirrigated areas to live exclusively from production of forest products, using government lands to support forest product production, with technical assistance to campesino groups for transportation and sale, production and post-harvest losses, energy plantations to supply bakeries and laundries, better controls of cuttingg reforesiation, and ending the concept of forest products being "free goods." (P. 65-68).

III-8 Florida Institute of Technology, Solar Cookers for Haiti, a Feasibility Study. Final report prepared by Thomas E. Bowman, James R. Sharber and Joel H. Blatt, December 1977 for AID; NTIS #PB 282-650. Approximately 260 pages in English.

The designs and data on solar cookers should have relevance to DR.

III-9 Makhijani, Arjun, Energy and Agriculture in the Third World, Ballinger Publishing Company, Cambridge, MA, 1975. 168 pages in English.

III-1 Benge, Michael D., Renewable Energy and Charcoal Production, AID October, 1978. Approximately 200 pages in English.

A series of AID papers oriented to Haiti and renewable energy plantations. Benge emphasizes the potential of the leucaena tree.

3. Agricultural Production and Processing

4. FAO, "Yearbook of Forest Products," 1977.

II-27 SEA, Informaciones Basicas sobre el Projecto Centro de Servicios Rurales Integrados Censeri, (Censeri Series #1). Secretaria de Estado de Agricultura. Santo Domingo, March, 1979. 36 pages plus annexes of 30 pages in Spanish.

Basic Information about the Project for Integrated Rural Service Centers (CENSERI). The CENSERI project has progressed significantly and is likely to expand further in the near future. The CENSERIs are a potential channel of distribution for improved energy devices to rural residents.

Comíte Interamericano de Desarrollo Agrícola. Inventario de la Información Básica para la Programación del Desarrollo Agrícola en la America Latina--República Dominicana. Washington, D.C.: Union Panamericana, 1963.

A very general inventory of basic information for use in formulating a program of agriculture development in the Dominican Republic.

República Dominicana. Secretaría de Estado de Agricultura. Encuesta y Análisis de la Economía Cafetera de República Dominicana. Santo Domingo: Marzo, 1973.

A detailed analysis of the Dominican coffee subsector. The study is based partly upon the results of the 1972 General Coffee Survey. It contains many useful tables on farm income, capital investment, manpower and productivity.

República Dominicana. Oficina Nacional de Estadística. Sacrificio de Ganado. Vol. XXX, 1967-1968. Santo Domingo.

A statistical document containing data on different types of livestock slaughter during the calendar years 1967 and 1968.

II-25 SEA, Evaluacion de las Perdidas Fisicas y Economicas en el Sector Agropecuario Producidas por el Huracan David y la Tormenta Frederick, Secretaria de Estado de Agricultura, Santo Domingo, October, 1979. 92 pages in Spanish.

This is an Evaluation of the Physical and Economic Losses in the Agricultural Sector Produced by Hurricane David and Storm Frederick (in August, 1979 and September 1979, respectively). The survey was done by SEA's Department of Control and Evaluation of Execution. The total agricultural damage is estimated at approximately RD$300 million using farm level values or RD$450 million if retail values were used. Losses are built up from subzones to seven consolidated regions to national totals. Losses are classified by crops plus livestock, fishing, and irrigation damages.

Huddleston, Harold F. and Fliginger, C. John. "Review of Dominican Republic's Agricultural Data Collection System." Report submitted to the U.S. Department of Agriculture, Statistical Reporting Service, Washington, D.C. July 1973. (Mimeographed).

An evaluation by two U.S.D.A. statisticians of the methods and procedures used in the General Agricultural Survey which was carried out by the Dominican Government in May 1973.

Huddleston, Harold F. and Dunkerley, Clarence. "A Methodological Report on Agricultural Statistics in the Dominican Republic." Report submitted to the U.S. AID Mission to the Dominican Republic. June 1974. (Mimeographed)

A detailed description of the methodology and procedures used in constructing the sample frame and in conducting the agricultural sample surveys in the Dominican Republic from 1972 through 1974 by statisticians from the U.S.D.A.

Huddleston, Harold F., and Dunkerley, Clarence. "Un Informe Metodológico Sobre Estadísticas Agrícolas en la República Dominicana." Report submitted to the U.S. AID Mission to the Dominican Republic. June 1974. (Mimeographed)

A spanish translation of the document listed immediately above.

Manzueta, Andres and Rodríguez, Pablo "Estudio Sobre la Economía Tabacalera de la República Dominicana." (Mimeographed)

A very detailed micro-study of the Dominican tobacco industry and market covering the period 1961 through 1971.

Ornes, Horacio. "Small Farm Production Model." Report submitted to the U.S. AID Mission to the Dominican Republic. Santo Domingo, 16 December 1974. (Typewritten)

The draft of a report on the development of a linear programming model for small farm production based upon the cost of production. The report also suggests possible applications of the model for use in agricultural and nutritional planning.

República Dominicana. Banco Central de la República. "Plan Nacional de Desarrollo Porcino para la República Dominicana." Vols. I, II, III and IV. Santo Domingo, Abril, 1974. (Typewritten)

A highly detailed study containing some 400 pages setting forth a plan for developing swine production in the Dominican Republic.

República Dominicana. Instituto de Estabilización de Precios. "Documento Básico, Arroz." Santo Domingo, Junio de 1974. (Mimeographed.)

An in-depth study of rice farming and production in the Dominican Republic. It contains valuable current information on rice research, soil studies, production, marketing and so forth.

República Dominicana. Secretaría de Estado de Agricultura. "Informe Sobre la Encuesta de Café, Cacao, Maíz y Habichuelas--Septiembre 1973." Santo Domingo, no date. (Mimeographed.)

A report containing the results of the Sample Survey of Coffee, Cacao, Corn and Beans conducted September 9-29, 1973. The document contains many informative statistical tables.

República Dominicana. Secretaría de Estado de Agricultura. "Estudio Especial de Cacao." Santo Domingo, no date. (Mimeographed.)

A special study on cacao production which includes all the results of the Sample Survey of Cacao conducted in September 1973. The report contains many informative statistical tables.

República Dominicana. Secretaría de Estado de Agricultura. "Informe Sobre la Encuesta de Café y Cacao--Marzo de 1974." Santo Domingo, no date. (Mimeographed).

A report containing the results of the Sample Survey of coffee and cacao conducted March 11-31, 1974. The document contains many informative statistical tables.

República Dominicana. Instituto de Estabilización de Precios. "Costo de Procesamiento de Arroz." Santo Domingo, 9 de Mayo de 1974. (Typewritten.)

A rice cost and production study based upon a rise mill with the capacity to process 32.5 hundredweight per hour and a drying plant with the capacity to process 150 seventy kilo bags.

República Dominicana. Programa Integrado de Desarrollo Agropecuario. "Proyecto Centro de Reproducción Animal-Resumen." Santo Domingo, Marzo de 1973. (Typewritten.)

A plan for establishing a livestock experiment farm and development center which would in turn be used to improve the beef and dairy cattle herds on farms throughout the Dominican Republic.

República Dominicana. Programa Integrado de Desarrollo Agropecuario. "Proyecto de Extensión-Resumen." An agency internal document. Santo, Domingo, no date. (Typewritten.)

A proposal for implementing an agriculture and livestock extension project which would extend technical assistance to about 18,000 Dominican farmers.

República Dominican. Programa Integrado de Desarrollo Agropecuario. "Sistema para el Control de las Metas Físicas." Santo Domingo, Mayo 1974. (Mimeographed.)

A plan setting forth a system of control, including arrangement, classification and codification, for the data generated by the various PIDAGRO projects.

4. General

II-23 ONE, Republica Dominicana en Cifras -- 1978, Vol. 8, November 1978. Secretario Tecnico de la presidencia, Oficina Nacional de Estadistica. 264 pages in Spanish.

The Dominican Republic in Figures -- 1978. Statistical tables including the following: Section 311 agricultural structure; 312 agricultural production, 325 electricity. Some data is obsolescent. The section 311 data are from the 1971 census, Section 312 data - 1960 and 1971 census plus agricultural production by products 1974-1977; electricity data 1967-1976.

II-33. The World Bank, Dominican Republic: Its Main Economic Development Problems, The International Bank for Reconstruction and Development 1978. 468 pages in English.

This study was based on field work in Autumn of 1976. The GODR government which took power in 1978 endorsed the basic analysis and lines recommended by the report. Attention is called to serious problems in electric power, CDE, and the overall fuel and energy supply situation. Recommendations include operating plans for hydroelectric dams, higher rates for electricity, exploring for oil and coal, reforestation and controlled tree harvesting. The report counsels postponing public expenditures on solar, geothermal, alcohol, and other new technologies. Higher prices for energy are proposed to cut consumption.

II-19 Republica Dominicana, Plan de Accion para el Desarrollo Regional de la Linea Noroeste. Secretaria General de la Organizacion de los Estados Americanos, Washington, D.C., 1977. 488 pages in Spanish.

A Regional Development Plan for the "Northeast Line" of the Dominican Republic. The area North and West of La Vega is all included in the region with primary attention to Dajabon and Monte Cristi. This regional plan for the northwest corner of the Dominican Republic includes the Valleys of the Yaque del Norte River and the Dajabon River. The study was done between 1972 and 1976 with technical assistance from the OAS.

The energy situation is summarized (p. 203) with maps showing the plans for rural electrification in 1971-1975 (p. 204-205).

Instituto Interamericano de Estadística. República Dominicana. Actividades Estadísticas de las Naciones Americanas (No. 20). Washington, D.C.: Union Panamericano, 1960.

A description of the statistical activities and services of the Dominican Republic. Although this document is considerably out-dated, it still contains useful basic information about continuing census activities in that country.

República Dominicana. Oficina Nacional de Estadística. Hoja de Balance de Alimentos para la República Dominicana, 1968. Santo Domingo, 1971.

A study on diet and nutrition in the Dominican Republic prepared by the National Statistical Office. This document contains a large number of statistical tables dealing with food consumption, food processing, food production and diet.

República Dominicana. Oficina Nacional de Planificación. Bases para Formular una Politica de Empleo en la República Dominicana.

A detailed study of manpower, underemployment and unemployment in the Dominican Republic. This study contains an analysis of the current employment situation along with recommendations for short and long-range policies. Particular emphasis is given to the agriculture, construction and industrial sectors of the Dominican economy.

República Dominicana. Oficina Nacional de Planificación. Plataforma para el Desarrollo Económico y Social de la República Dominicana (1968-1985). Santo Domingo: 1968.

An in-depth study setting forth a 15 year plan for the economic and social development of the Dominican Republic. This document contains a large number of statistical tables.

[II-7 INDOTEC, Investigacion Bibliograpfica Sobre Energia Solar, prepared by Gil M. Canario, October 1979. _____ pages in Spanish.

120 works available on solar energy at INDOTEC's data bank.

U.S. Agency for International Development. Mission to the Dominican Republic. "Memory Bank," AID Bibliography and List of Available Publications. Prepared by Henry J. Welhouse. Santo Domingo, January 1974. (Mimeographed.

A bibliography of publications and unpublished documents available through Dominican government agencies and educational institutions as well as the AID Mission in Santo Domingo as of January 1974. The entries are divided into four major categories--Agriculture and Natural Resources, Economics and Finances, Social Affairs and General Affairs. This document is an extremely valuable aid since it contains approximately 1,400 listings, including reports and studies done by outside consultants for the AID Mission and the Dominican Republic Government.

5. Households

República Dominicana. Banco Central de la República Dominicana, Oficina Nacional de Estadística y Agencia Internacional para el Desarrollo (USAID). I. Ingresos y Gastós de las Familias en la Ciudad de Santo Domingo, 1969. Estudios Sobre Presupuestos Familares. Santo Domingo, D.N.: 1971.

_____. II. Distribución del Gasto de las Familias en la Ciudad de Santo Domingo, 1969. Estudios Sobre Presupuestos Familiares. Santo Domingo, D.N.: 1972.

_____. III. Metodologiá para el Cálculo del Indice de Precios al Consumidor en la Ciudad de Santo Domingo, 1969. Estudios Sobre Presupuestos Familiares. Santo Domingo, D.N.: 1972.

_____. IV. Indice de Precios al Consumidor en la Ciudad de Santo Domingo 1960-1970. Estudios Sobre Presupuestos Familiares. Santo Domingo, D.N.: 1972.

_____. V. Consumo de Alimentos y Nutrientes en la Ciudad de Santo Domingo, 1969. Estudios Sobre Presupuestos Familiares. Santo Domingo, D.N.: 1974.

All of the above five volumes are part of a study of middle and lower-family income and spending which was carried out in Santo Domingo from 1969 through 1971. This study was developed and conducted jointly by the Central Bank, the National Statistical Office and the AID Mission in Santo Domingo. The different volumes are micro-studies on family spending, family food consumption and diet, and consumer price indices. Together the five documents contain several hundred valuable statistical tables.

República Dominicana. Secretaría de Estado de Agricultura. "Informe Sobre Estudio de Consumo Hogareño y Mano de Obra." Santo Domingo, No date. (Mimeographed).

A report containing the results of the Sample Survey of Household Consumption carried out in November and December 1973. This report also contains data on manpower collected as part of the same survey.

República Dominicana. Oficina Nacional de Estadística. Comercio Exterior de la Republica Dominicana 1971. Vol. XIX, Santo Domingo, 1972.

An annual statistical report of the type and quantity of all products and materials imported into or exported from the Dominican Republic during 1971 along with the countries of origin or destination. This report contains a large number of valuable statistical tables. Many of these tables also contain data for 1970 so that a comparison may be made between the two years.

6. Export and Import

República Dominicana. Centro Dominicano de Promoción de Exportaciones. EXPORTEMOS. Boletín No. 9, Septiembre 1974. Santo Domingo.

A monthly bulletin of statistics on all products exported from the Dominican Republic. Each issue shows the cumulative figures to date for the calendar year as well as the figures for the same period of the previous year.

7. Industry

República Dominicana. Oficina Nacional de Estadística. Estadística Industrial de la República Dominicana 1972. No. 20. Santo Domingo: no date.

A report on industrial activity in the Dominican Republic for 1972 based upon the results of a national sample survey of industry carried out by the National Statistical Office. The report contains a large number of statistical tables dealing with types of industry, production, manpower, capital investment, etc. Several tables are devoted exclusively to the sugar industry.

5. Oficina Nacional de Estadistica, "Estadistica Industrial de la Republica Dominica, 1975," Santo Domingo, 1975.

República Dominicana. Oficina Nacional de Estadística. Indice de la Producción Industrial Manufacturera. No. 10. Santo Domingo: 1974.

A statistical report on industrial production in the Dominican Republic for the years 1961 through 1972. The document contains several charts and graphs as well as statistical tables.

8. Government and Public Sector

II-21 ONAPLAN, Posibilidades del Desarrollo Economico-Social de la Republica Dominicana, 1976-1986, PLANDES 26, 1976. 602 pages in Spanish. Sect. Technico de la Presidencia, Oficina Nacional de Planificacion.

A National Development Plan for 1976-1986 including the following material; Chapter II, Agriculture Sector (pp. 85-184); Chapter III Irrigation Sector (pp. 185-198); Chapter IV, Fishing Sector (pp. 199-210); Chapter V, Forestry Sector (pp. 211-220); Chapter VI, Agro-Industry Sector (p. 236), Energy Sources (p. 238), (1/3 page saying energy prices will be high so attention must be given to more rational use of energy, low interest loans to finance more efficient equipment, seminars for consciousness raising, evaluations of projects considering carefully electricity and fuel supply, alternative fuels studies, and explore for hydrocarbons,) objectives for agricultural development (p. 598).

II-22 ONAPLAN, Plan Trienal de Inversiones Publicas 1980-1982, (PLANDES 42). Secretariado Tecnico de la Presidencia, Oficina Nacional de Planificacion. Santo Domingo, 1980, 91 pages plus annexes of 117 pages in Spanish.

This is the current Three Year Plan of Public Investments for 1980-1982. It describes the most current thinking about Government strategy and intentions for the immediate future. The annex summarizes all the approved projects for government agencies.

II-26 SEA, Propuesta de Reestructuracion del Sector Publico Agropecuario, Secretaria de Estado de Agricultura. Santo Domingo, November, 1978 114 pages in Spanish.

A Proposal for Restructuring the Public Sector for Agriculture that led to the 1979-1980 legislative reforms before the Dominican Congress for reorganizing many government organizations into single Secretariate of Agriculture.

1 Servicio de Información de Precios y Mercados: Plan de Operaciones. SEA, División Mercadeo Septiembre, 1975. 54 páginas.

2. Murray, G. F. Análisis del Flugo de actividades. Una Metolodogía de Investigación para Sistemas de Producción y Mercadeo Agrícolas. SEA/IICA. Santo Domingo, R.D. Octubre 1975. 21 páginas.

3 Donde Reina la Escasez: Un Panorama Analítico del Sistema de Mercadeo Agrícola de la República Dominicana. (Murray, G., Alcantara R., Prince, L.) SEA/IICA. Santo Domingo, R.D. Octubre 1975. 28 páginas.

4 Encuesta de Entrada y Salida de Productos Agropecuarios a Santo Domingo. SEA/IICA Santo Domingo, R.D. Abril 1976. 37 páginas.

9. Marketing and Production

I-1 Secretaria de Estado de Agricultura, Subsecretaria Tenica de Planificacion Sectorial Agropecuaria Diagnostico del Sistema de Mercadeo Agricola en Republica Dominicana. Santo Domingo, 1977. 312 pages in Spanish Available at SEA, Department of Agricultural Economics.

Diagnosis of Agricultural Marketing Systems in the Dominican Republic, is a valuable supplementary source of data on the structure of the food/agriculture sector in 1977. It is based on a series of 30 published papers done by the Secretariate of Agriculture with assistance from IICA (Interamerican Institute for Agricultural Sciences).

The breadth of the analysis is suggested by the chapter headings: 1. References about the Agricultural Sector; 2. Characteristics of Rural Gathering; 3. Food Distribution; 4. Marketing Service; 5. Commercialization by Products; 6. Conclusions and 11 annexes.

The products included in the analysis are rice, corn beans, yuca, batata, potato, tomatoes, industrial tomatoes, onions, garlic, molondron, guandul, papaya pineapple, oranges, grapes, cattle and meat, milk, chicken, and eggs.

The topics covered vary somewhat from product to product; for example, in rice the study covers thefollowing topics: aspects of production, volumes produced and seasons, costs of production and yields, marketing aspects, rice processing factories and INESPRE, infrastructure for commercialization, purchases of products locally and abroad, channels of commercialization, margins of commercialization, aspects of consumption, analysis of prices, price stabilization, and market prices at the consumer level.

For an energy analysis of food/agriculture, this source is potentially valuable. For example, it puts quantities on the distribution channels for chicken by separating fresh chicken, processing, freezing, etc.

II-28 SEA, Boletin Informativo de Precios y Mercados, Depto Economica Agropecuaria. 20/7/79 is number 81 in the series. 10 pages in Spanish.

A periodical with wholesale and retail prices and press releases.

7 DELCANDA International Ltd., "Technical-Economic Study of the Transport Sector," Report to the Interamerican Development Bank, Dominican Republic, July 1978.

República Dominicana. Instituto Azucarero Dominicano. Azúcar y Melaza. Estadisticas Mensuales. Santo Domingo: 1973.

A statistical report on sugar and molasses production, exportation, domestic consumption and inventories in the Dominican Republic for calendar year 1973.

República Dominicana. Instituto Azucarero Dominicano. Estadísticas Azúcareras 1970. Santo Domingo: no date.

A detailed statistical report on the Dominican sugar industry. This document contains tables on production quotas, yields, world consumption, etc. for varying periods between 1940 and 1970.

9 Diagnóstico del Mercadeo de la Leche en la República Dominicana. (De Los Santos, T. Burgos, C. y Mendoza, G.) SEA/IICA. Santo Domingo, R.D. Junio 1976. 23 páginas.

10 Diagnóstico del Mercadeo de Huevos en la República Dominicana. (Ureña de Martinez, R. Y. Mendoza G.) SEA/IICA. Santo Domingo. R.D. Junio, 1976. 19 páginas.

11 Diagnóstico del Mercadeo del Pollo en la República Dominicana (de Los Santos, T., Burgos, C. Y. Mendoza, G.). SEA/IICA. Santo Domingo, R.D. Junio, 1976. 21 páginas.

12 Diagnóstico del Mercadeo del Tomate en la República Dominicana. (Jimenez, F. Vasquez, V. Y. Mendoza, G.) SEA/IICA. Santo Domingo, R.D. Junio, 1976. 20 páginas.

13. Diagnóstico del Mercadeo de Viveres (Yuca, Batata y Plátano) en la República Dominicana. SEA/IICA. Santo Domingo, R.D. Junio, 1976. 68 páginas.

14 Diagnóstico del Mercadeo del Arroz en la República Dominicana. (Hernandez, A. Pla, D. Y. Morales, H.). SEA/IICA. Santo Domingo, R.D. Junio, 1976, 81 páginas.

16 Diagnóstico del Mercadeo de la Naranja, la Piña y la Lechosa en la República Dominicana. (Vasquez, V. Y. Mendoza, G.) SEA/IICA. Santo Domingo, R.D. Julio, 1976. 26 páginas.

17 Mercados Públicos en República Dominicana (Alcantara, R. La Gra. J, Y. Colaboradores). SEA/IICA. Santo Domingo, R.D. Julio, 1976, 33 páginas.

18 Organizaciones Agropecuarias Activas en la República Dominicana (Alcantara, R. McKinney, W. Gomez de Ega, R. Ramirez, C. Y. La Gra. J,) Marzo, 1976. SEA/IICA. Santo Domingo, R.D. Julio, 1976. 18 páginas.

23 La Distribución de Alimentos en Santo Domingo. (Jimenez, F. Suarez N. Mendoza, G. Y. Colaboradores). SEA/IICA. Santo Domingo, R.D. Agosto, 1976. 24 páginas.

26 Encuesta de Entrada y Salida de Productos Agropecuarios a Santo Domingo (Tercera Parte). Abril, 1977. 93 páginas.

28 Proyecto Centros de Servicios Rurales Integrados CENSERI. SEA/IICA Santo Domingo. R.D. Mayo, 1977, 17 páginas.

33 Conclusiones de los talleres de trabajo sobre mercadeo de productos agropecuarios. SEA/IICA. Octubre 1977. 77 páginas.

5 La Comercialización de Plátanos en la República Dominicana. (Alcantara, R. Prince L. Y. Murray, G.). SEA/IICA. Santo Domingo. R.D. Abril, 1976. 165 páginas.

6 Diagnóstico del Mercadeo de la Papa en la República Dominicana (Vasquez, V. Mendoza, G. Y. Colaboradores) SEA/IICA. Santo Domingo, R.D. Mayo, 1976, 26 páginas.

7 Diagnóstico del Mercadeo de la Auyama y el Molondrón en la República Dominicana (Vasquez, V. Mendoza, G. Y. Colaboradores) SEA/IICA. Santo Domingo, R.D. Mayo, 1976. 26 páginas.

8 Diagnóstico del Mercadeo del Ganado y la Carne de Res en la República Dominicana (De Los Santos, T. Burgos, G. Y. Mendoza, G.). SEA/IICA. Santo Domingo, R.D. Mayo, 1976, 37 paginas.

15 Encuesta de Entrada y Salida de Productos Agropecuarios a Santo Domingo (Segunda parte). SEA/IICA. Santo Domingo, R.D., Julio, 1976. 93 páginas.

19 Diagnóstico del Mercadeo del Ajo en la República Dominicana. (Perez Luna, F., Vasquez, V. Nuñez Pereyra, C. Perez Labour, J. Y. Mendoza, G.) SEA/IICA. Santo Domingo, R.D. Julio, 1976. 14 páginas.

20 Diagnóstico del Mercadeo de Fertilizantes en la República Dominicana. (Fernandez, A. Mendoza G. Y. Colaboradores). SEA/IICA. Santo Domingo. Julio, 1976. 19 páginas.

21 Diagnóstico del Mercadeo de la Cebolla en la República Dominicana. (Perez Luna, F. Vasquez, V. Y. Mendoza, G.). SEA/IICA. Santo Domingo, R.D. Julio, 1976. 35 páginas.

22 Diagnóstico del Mercadeo de Habichuelas en la República Dominicana (Hernandez, A. Morales, H. Y. Colaboradores) SEA/IICA. Santo Domingo, R.D. Julio 1976, 38 páginas.

24 Estudio sobre Pérdidas Post-Cosecha de Papa en la República Dominicana (Mansfield, G. Jimenez, J. Mendoza, G.). SEA/IICA. Santo Domingo, R.D. Diciembre, 1976. 70 páginas.

25 Inventario de Organizaciones Agropecuarias Activas en la República Dominicana. Marzo, 1976. (Alcantara, R. McKinney W., Ramirez, C. de Aza, R. Y. La Gra, J.). SEA/IICA, Santo Domingo República Dominicana, Enero, 1977. 155 páginas.

27 Estudio sobre Pérdidas Post-Cosecha de Tomate en República Dominicana (Mansfield, G. Jimenez, F., Perez, J. Mendoza, G.). SEA/IICA. Santo Domingo. R.D. Abril, 1977, 62 páginas.

29 Diagnóstico del Mercadeo de Maíze la República Dominicana. (Suriel, T. Hernandez, A. Pla. D. Y. Colaboradores). SEA/IICA. Santo Domingo, R.D. Mayo, 1977. 41 páginas.

30 Diagnóstico del Abastecimiento de Alimentos en Santo Domingo (Martinez, D., Becker, A. Y Colaboradores). SEA/IICA. Santo Domingo, R.D. Junio, 1977, 61 páginas.

31 Bases para una Metodologia de Estudios de Pérdidas Post-Cosecha de Productos Agropecuarios. (Mansfield, G. Mendoza, G. y Colaboradores). SEA/IICA. Santo Domingo, R.D. Agosto, 1977, 37 páginas.

32 La Distribución urbana de alimentos en la ciudad de Santo Domingo (Suriel T., Martinez D, Mendoza G. Y Colaboradores). SEA/IICA, Santo Domingo R.D. Octubre 1977, 100 páginas.