BIBLIOGRAPHIC DATA SHEET

1. CONTROL NUMBER
PN-AAJ-767

2. SUBJECT CLASSIFICATION (695)
PA00-0000-0000

3. TITLE AND SUBTITLE (240)
Data processing guidelines, basic documentation, v. 2

4. PERSONAL AUTHORS (100)

5. CORPORATE AUTHORS (101)
Int. Statistical Inst.

6. DOCUMENT DATE (110)	7. NUMBER OF PAGES (120)	8. ARC NUMBER (170)
1980	254p.	312.Ø28.I61

9. REFERENCE ORGANIZATION (130)
ISI

10. SUPPLEMENTARY NOTES (500)
(Data processing guidelines for the World Fertility Survey)

11. ABSTRACT (950)

12. DESCRIPTORS (920)
Data processing
Fertility survey
Surveys
Statistical analysis
Statistics

13. PROJECT NUMBER (150)
931054700

14. CONTRACT NO.(140)
AID/csd-3606

15. CONTRACT TYPE (140)

16. TYPE OF DOCUMENT (160)

AID 590-7 (10-79)

PN AAJ 767

Data Processing Guidelines

Volume 2

BASIC DOCUMENTATION

MAY 1980

INTERNATIONAL STATISTICAL INSTITUTE
Permanent Office • Director: E. Lunenberg
428 Prinses Beatrixlaan
Voorburg, The Hague
Netherlands

WORLD FERTILITY SURVEY
Project Director:
Sir Maurice Kendall, Sc. D., F.B.A.
35-37 Grosvenor Gardens
London SW1W 0BS, U.K.

The World Fertility Survey is an international research programme whose purpose is to assess the current state of human fertility throughout the world. This is being done principally through promoting and supporting nationally representative, internationally comparable, and scientifically designed and conducted sample surveys of fertility behaviour in as many countries as possible.

The WFS is being undertaken, with the collaboration of the United Nations, by the International Statistical Institute in cooperation with the International Union for the Scientific Study of Population. Financial support is provided principally by the United Nations Fund for Population Activities and the United States Agency for International Development. Substantial support is also provided by the U.K. Overseas Development Administration.

For information on Country Reports, WFS publications, and WFS depository libraries, write to the Publications Office, International Statistical Institute, 428 Prinses Beatrix aan, P.O. Box 950, 2270 AZ Voorburg, Netherlands. For information on the WFS, generally, write to the Information Office, World Fertility Survey, International Statistical Institute, 35-37 Grosvenor Gardens, London SW1W 0BS, U.K.

Data Processing Guidelines

Volume 2

Prepared by:

WFS CENTRAL STAFF
International Statistical Institute
35-37 Grosvenor Gardens
London SW1W 0BS U.K.

Contents

Volume 1

CHAPTER 1 GENERAL SYSTEM

1.1	**Introduction**	1
1.2	**Data and its Documentation**	1
1.2.1	Data	1
1.2.2.	Questionnaire and card identification	2
1.2.3.	Missing data	2
1.2.4.	Data documentation	3
1.3.	**Data Processing Steps**	3
1.3.1.	Keypunching	4
1.3.2.	Data editing/cleaning	4
1.3.3	Recoding and the Standard Recode File	6
1.3.4.	Preparation of Country Report No. 1 Tables	6
1.3.5.	Archiving data and preparations for analysis	7
1.4.	**DP Strategy Considerations**	7
1.4.1	Processing household data and individual data together versus separately	7
1.4.2	Rectangular versus structured files	8
1.4.3	Availability of computer software	8
1.5.	**Preparation for Data Processing**	9
1.5.1	The DP Manual	9
1.5.2	Planning	9
1.5.3.	Preparing documentation and test data	10
1.5.4	Program specifications	10
1.5.5	Program writing and testing	10
1.5.6	Data processing organization and control	11

CHAPTER 2 FORMAT AND STRUCTURE EDIT

2.1	**Overview**	13
2.2	**Format Edit**	13
2.2.1	Card type check	13

2.2.2 Identification check 13
2.2.3 Blank columns check 14
2.2.4 Numeric check 14
2.2.5 Error reporting 14
2.2.6 Conversion of blanks to inapplicable codes 14
2.3 Sorting and Separating the Data 14
2.4 Structure and Completeness Edit 15
2.4.1 All household members for each household present 15
2.4.2 Eligibility for individual interview 15
2.4.3 All households present 16
2.4.4 All relevant individual cards present 17
2.4.5 All eligible women interviews present 18

2.5 Preparations for Consistency Checking 18

2.6 Summary 18

CHAPTER 3 GENERAL CONSISTENCY EDIT

3.1 General Discussion 20
3.1.1 Introduction 20
3.1.2 Types of Checks 20
3.1.3 Programming Strategy 20

3.2 Diagrammatic Representation of Flow of Questionnaire 21
3.2.1 Structure of Network Diagram 22
3.2.2 Ranges 23
3.2.3 Skips 23
3.2.4 Filters 24

3.3 Range Checks 24

3.4 Skip Checks 24

3.5 Filter Checks 25

3.6. Birth and Marriage Table Checks 25

3.7 Miscellaneous Consistency Checks 26

3.8 Data Editing 26

3.9 Conclusion 26

CHAPTER 4 EDITING AND IMPUTATION OF BIRTH AND MARRIAGE HISTORIES

4.1	**Required Basic Checks**	27
4.2	**Editing of Histories with Incomplete Data**	28
4.3	**Different Forms of the Dates and The Century Month Code**	28
4.4	**Date Imputation**	28
4.5	**Results from Date Edit and Imputation**	30
4.6	**The WFS Date Edit, Imputation and Recoding Program**	30
4.7	**Summary of Date Edit, Imputation, and Recoding**	30

CHAPTER 5 RECODING OF VARIABLES

5.1	**Reasons for Recoding**	32
5.2	**The WFS Standard Recode File**	32
5.3	**Recoding Conventions**	33
5.3.1	Grouped Variables	33
5.3.2	Leading Zeros	33
5.3.3	Missing data	33
5.3.4	Default codes	34
5.3.5	Respondent Identification	34
5.4	**Recode Specifications**	34
5.4.1	Standard recode file contents	34
5.4.2	Variable names	35
5.4.3	Code ranges	35
5.4.4	Diagrammatic representation of recode specifications	35

CHAPTER 6 TABULATIONS

6.1	**Introduction**	38
6.2	**Software for Table Production**	38

6.3 Specification of Tables 39
6.3.1 Variables defining the base population 39
6.3.2 Classification Variables 39
6.3.3 Variables defining the cell entries 40
6.3.4 Presentation of "DK" or "NS" categories 40

6.4 Types of Tables 41
6.4.1 Table giving simple frequencies (FREQ) 41
6.4.2 Tables giving row percentages for categorical variables (CATG) 41
6.4.3 Tables giving row percentages for metric variables (METR) 41
6.4.4 Tables giving cell-by-cell percent (PERC) 41
6.4.5 Tables giving cell-by-cell means (MEAN) 42
6.4.6 Tables giving cell-by-cell ratios (RATI) 42
6.4.7 Examples of the types of tables 42

6.5 Tables for Weighted Data 42

6.6 Sampling errors for WFS Country Report tabulations 43

CHAPTER 7 DATA ARCHIVING

7.1 Types of Data to be Archived 50
7.2 Data Documentation 50
7.2.1 Codebook 50
7.2.2 Description of the survey 50
7.2.3 Questionnaire and coding instructions 51
7.2.4 Editing and coding specifications 51
7.2.5 Computer programs used 52
7.2.6 The DP Manual 52

7.3 Marginal Distributions 52

Appendix I Some Software for Data Cleaning, Tabulation, and Further Analysis 53

END OF CONTENTS VOL 1

Volume 2

Appendix II DP Manual For Processing Data from the WFS Core Questionnaire

1 Data and Documentation 61

Questionnaire and WFS dictionary proforma 63
Codebook for Core Questionnaire 69
Machine Readable Codebook for Recoded Data 85
Test Data 87

2 Planning and Control 89

Data Processing Flowcharts 91
Programming and Data Processing Estimates 99
Bar Chart for Programming and Data Processing 103
Data Processing Control Document 107

3 Data Processing Specifications 111

Keypunching Specifications (card layout) 113
Format Check Specifications 119
Structure Check Specifications 123
Individual Questionnaire Network Diagram 127
Range, Skip, Filter, Basic Date and Miscellaneous Consistency Checks for Individual Data 147
Range, Skip and Consistency Checks for Household Data 153
Data Extraction Specifications (for Date Editing) 159
Recode Specifications (Individual data) 167
Specifications for Tables for Country Report Number 1 201
Specifications for Sampling Errors. 217

4 Programming Specifications 225

LIST	MARGINALS*
FORMAT*	RANGE, CONSIS, HHCONS
SUPDATE*, UPDATE*	EXTRACT
SEPARATE	DEIR*
STRUCT*	RECODE
STRUCT2	COMBINER
STRUCT3	COCGEN*, COCENTS
STRUCT4	CLUSTERS*

*Program available from WFS headquarters

5 Sample Runs of Programs following DP flowchart for total process 251

Appendix II

DP Manual for Processing Data from the WFS Core Questionnaire

1. Data and Documentation

Questionnaire and WFS dictionary proforma

Codebook for Core Questionnaire

Machine Readable Codebook for Recoded Data

Test Data

BLANK PAGE

Questionnaire and WFS Dictionary Proforma

BLANK PAGE

CONFIDENTIAL

Information to be used for research purposes only

World Fertility Survey

(International Statistical Institute)

INDIVIDUAL CORE QUESTIONNAIRE
(For ever-married women under the age of 50)

[NAME OF COUNTRY]

[NAME OF ORGANIZATION]

IDENTIFICATION
PLACE NAME _____
CLUSTER NUMBER _____ HOUSEHOLD NUMBER _____
LINE NUMBER OF WOMAN _____

Interviewer calls	1	2	3
Date			
Interviewer name			
Time started			
Time ended			
Duration			
Result*			
Next visit: Date / Time			

***Result codes**

1. Completed
2. Not at home
3. Deferred
4. Refused
5. Partly completed

Other (SPECIFY)

2 1 (1)

(3) (5) (6) (8)

(9)

(11) (13) (15)

(17)

(19) (21)

(22) (23) (24)

(25) (26)

Scrutinized ☐	Reinterviewed or spot-checked ☐	Edited ☐	Coded ☐
Name _____	Name _____	Name _____	Name _____
Date _____	Date _____	Date _____	Date _____

Note: For the rest of the Individual Questionnaire and the Household Schedule, see *WFS Core Questionnaires* and *Modifications to the WFS Core Questionnaires.*

BLANK PAGE

BLANK PAGE

SHEET ____ OF ____ SHEETS

WFS - DATA - DICTIONARY FORM

1. DATA SET	3. COUNTRY
2. REQUESTER	4. DATE

VARIABLE NAME	SPACE	CT	SPACE	STARTING LOCATION	SPACE	LENGTH	MIN	MAX	SPACE	NOT APPLICABLE	SPACE	SPECIAL CODE	SPACE	VARIABLE LABEL: VALUE CODE	SPACES	VALUE LABEL	SPACE	VALUE LABEL REFERENCE	SYSTEM SERIAL NUMBER
1–6	7	8–9	10	11–13	14	15–16	17–20	21–24	25	26–29	30	31–34	35	36–39	40–43	44–63	64–65	66–67	68–80

BLANK PAGE

Codebook for Core Questionnaire

BLANK PAGE

Codebook For Core Questionnaire

A Household Schedule (Card types 10, 11)

Card 10 (Household cover sheet)

Question	Description	Location	Coding
	Card type	1-2	10
	Cluster	3-5	
	HH number	6-8	
	Line number	9-10	00
INTDAY	Interview day	11-12	01-31
INTMTH	Interview month	13-14	04, 05, 06
INTYR	Interview year	15-16	74
INTNO	Interviewer code	17-19	
RSLT1	Result of 1st visit	19	1 = completed 2 = not at home 3 = deferred 4 = refused 5 = partly completed
RSLT2	Result of 2nd visit	20	Coding as for RSLT1 Blank = NA
RSLT3	Result of 3rd visit	21	Coding as for RSLT2
RSLT4	Result of 4th visit	22	Coding as for RSLT2
VISITS	Total visits	23	1-4
FRSLT	Final result	24	Coding as for RSLT1
NPERS	No. of persons in household	25-26	00-49
NELIGW	No. of eligible women	27	0-7

Card 11 (Household member data)

Question	Description	Location	Coding
	Card type	1-2	11
	Identification	3-10	
GENER	Generation	11	1 = grandparents 2 = parents 3 = head of household 4 = child 5 = grandchild 6 = other relation 7 = unrelated 9 = N.S.
COUPLE	Couple code	12	1-6 7 = partner not in HH 9 = N.S. Blank = NA

Card 11 (Household member data)—continued

Question	Description	Location	Coding
MLINE	Mother's line number	13-14	01-49
JURE	Usual resident	15	1 = yes 2 = no 9 = N.S.
FACTO	Slept last night	16	1 = yes 2 = no 9 = N.S.
SEX	Sex	17	1 = male 2 = female 9 = N.S.
AGE	Age	18-19	00-86 87 = 87+
SCHOOL	Attended school	20	1 = yes 2 = no 9 = N.S.
EDLEV	Highest level	21	1 = primary 2 = secondary 3 = university 4 = other 9 = N.S.
EDGRAD	Highest grade	22	1-7 = No. of years 9 = N.S. Blank = NA
EMARR	Ever married	23	1 = yes 2 = no Blank = NA
MARST	Marital status	24	1 = married 2 = widowed 3 = divorced 4 = separated 9 = N.S. Blank = NA
ELIG	Eligible	47	1 = yes Blank = no
IRSLT	Result of individual interview	48	1 = completed 2 = not at home 3 = deferred 4 = refused 5 = partly completed 6 = other 9 = N.S. Blank = NA

B Individual Questionnaire (Card types 21-91)

Card 21 (Cover sheet)

Question	Description	Location	Coding
	Card type	1-2	21
	Household	3-8	
	Line number	9-10	01-25
INTDAY	Day of interview	11-12	01-31
INTMON	Month of interview	13-14	04-06
INTYR	Year of interview	15-16	74
INTERV	Interview code	17-18	01-91
DUR	Duration of interview in minutes	19-21	10-90
RSLT1	Result of 1st visit	22	1 = completed 2 = not at home 3 = deferred 4 = refused 5 = partly completed
RSLT2	Result of 2nd visit	23	1-5 (as RSLT1) Blank = NA
RSLT3	Result of 3rd visit	24	1-5 (as RSLT2) Blank = NA
VISITS	Number of visits	25	1-3
FRSLT	Final result	26	1-5 (as RSLT1)

Card 31 (Background characteristics, children ever-born)

Question	Description	Location	Coding
	Card type	1-2	31
	Household identification	3-8	
	Line number	9-10	01-25
Q101	Live in house	11	1 = yes 2 = no
Q102	Live in area	12	1 = yes 2 = no Blank = NA
Q103	Place of residence	13-15	001-562 Blank = NA
Q104	Always lived there	16	1 = yes 2 = no
Q105	Type of area	17	1 = countryside 2 = town 3 = city
Q107M	Month of birth	18-19	01-12 99 = N.S.
Q107Y	Year of birth	20-21	24-60 99 = N.S.

Question	Description	Location	Coding
Q108	Age	22-23	15-49 Blank = NA
Q109	Ever attended school	24	1 = yes 2 = no
Q110	Highest level education	25	1 = primary 2 = secondary 3 = university Blank = NA
Q111	Highest grade	26	1-5 Blank = NA
Q113	Can read	27	1 = yes 2 = no Blank = NA
Q201	Any births	38	1 = yes 2 = no
Q202	Any short lived births	39	1 = yes 2 = no Blank = NA
Q203	Ever pregnant	40	1 = yes 2 = no
Q204	Ever pregnant (probed)	41	1 = yes 2 = no Blank = NA
Q205	Any sons living with	42	1 = yes 2 = no Blank = NA
Q206	No. of sons living with	43-44	01-15 Blank = NA
Q207	Any sons living away	45	1 = yes 2 = no Blank = NA
Q208	No. of sons living away	46-47	01-15 Blank = NA
Q209	Any daughters living with	48	1 = yes 2 = no Blank = NA
Q210	No. of daughters living with	49-50	01-15 Blank = NA
Q211	Any daughters living away	51	1 = yes 2 = no Blank = NA
Q212	No. of daughters living away	52-53	01-15 Blank = NA
Q213	Any children who died	54	1 = yes 2 = no Blank = NA
Q214	No. of children who died	55-56	01-15 Blank = NA
Q215	Total children born	57-58	0-24

Card 41 (Birth history)

Question	Description	Location	Coding
	Card type	1-2	41
	ID	3-10	
Q217M1	Month of birth (1st)	11-12	01-12 22 = years ago 33 = multiple birth 99 = NS. Blank = NA
Q217Y1	Year or years ago of birth (1st)	13-14	Blank = NA
Q21801	Sex of child (1st)	15	1 = male 2 = female Blank = NA
Q21901	Child still alive (1st)	16	1 = yes 2 = no Blank = NA
Q22001	Age of child at death (1st)	17-18	1 = <1 month 2 = 1-3 months 3 = 3-6 months 4 = 6-12 months 5 = 1-2 years 6 = 2-5 years 7 = 5-10 years 8 = 10+ years 99 = N.S.
Q217M2-Q22002	2nd birth	19-26	Coding as for 1st birth
Q217M3-Q22003	3rd birth	27-34	"
Q217M4-Q22004	4th birth	35-42	"
Q217M5-Q22005	5th birth	43-50	"
Q217M6-Q22006	6th birth	52-58	"
Q220M7-Q22007	7th birth	59-66	"
Q220M8-Q22008	8th birth	67-74	"

Card 42 (Birth history — continued) — optional card

Question	Description	Location	Coding
	Card type	1-2	42
	Identification	3-10	
Q217M9-Q22009	9th birth	11-19	Coding as for 1st birth
Q217M10-Q22010	10th birth	19-26	"
Q217M11-Q22011	11th birth	27-34	"
Q217M12-Q22012	12th birth	35-42	"
Q217M13-Q22013	13th birth	43-50	"
Q217M14-Q22014	14th birth	51-58	"
Q217M15-Q22015	15th birth	59-66	"
Q217M16-Q22016	16th birth	67-74	"

Card 43 (Birth history — continued) — optional card

Question	Description	Location	Coding
	Card type	1-2	43
	Identification	3-10	
Q217M17-Q22017	17th birth	11-18	Coding as for 1st birth
Q217M18-Q22018	18th birth	19-26	"
Q217M19-Q22019	19th birth	27-34	"
Q217M20-Q22020	20th birth	35-42	"
Q217M21-Q22021	21st birth	43-50	"
Q217M22-Q22022	22nd birth	51-58	"
Q217M23-Q22023	23rd birth	59-66	"
Q217M24-Q22024	24th birth	67-74	"

Card 51 (Breastfeeding and non-live births)

Question	Description	Location	Coding
	Card type	1-2	51
	Identification	3-10	
Q221	Breastfed last child	11	1 = yes 2 = no Blank = NA
Q222	Months breastfed last child	12-13	0-75 76 = 76+ 96 = still breastfeeding 97 = breastfed until child died 99 = NS Blank = NA
Q223	More than one birth (filter)	14	1 = yes 2 = no Blank = NA
Q224	Breastfed penultimate child	15	1 = yes 2 = no Blank = NA
Q225	Months breastfed penultimate child	16-17	Coding as for Q222
Q226	Currently pregnant	18	1 = yes 2 = no Blank = NA
Q227M	Month when baby is due	19-20	01-12 Blank = NA
Q227Y	Year when baby is due	21-22	74, 75 Blank = NA

Question	Description	Location	Coding
Q228	Sex preference for next baby	23	1 = boy 2 = girl 3 = either 4 = other answer 9 = N.S. Blank = NA
Q229	No pregnancies (filter)	24	1 = yes 2 = no Blank = NA
Q230	Any other pregnancies	25	1 = yes 2 = no Blank = NA
Q232	No. of other pregnancies	26-27	01-10 Blank = NA
Q233M1	Month pregnancy ended (1st)	28-29	01-12 22 = Q233Y1 gives birth interval Blank = NA
Q233Y1	Year pregnancy ended (1st)	30-31	Blank = NA
Q23501	Length of pregnancy (1st)	32	0-6 7 = 7+ months Blank = NA
Q23601	Did baby ever have life (1st)	33	1 = yes 2 = no Blank = NA
Q23701	Sex of child (1st)	34	1 = male 2 = female Blank = NA (no child, no life)
Q233M2-Q23702	2nd other pregnancy	35-41	Coding as for 1st other pregnancy
Q223M3-Q23703	3rd other pregnancy	42-48	"
Q233M4-Q23704	4th other pregnancy	49-55	"
Q233M5-Q23705	5th other pregnancy	56-62	"
Q233M6-Q23706	6th other pregnancy	63-69	"
Q233M7-Q23707	7th other pregnancy	70-76	"
Q238	Reliability of birth history answers	77	1 = good 2 = fair 3 = poor

Question	Description	Location	Coding
Q239	Presence of others (birth history)	78-79	0 = no other 1 = children under 10 2 = husband 3 = husband & children 4 = other males 5 = children, other males 6 = husband, other males 7 = husband, children, other males 8 = other females 9 = children, other females 10 = husband, other females 11 = husband, children, other females 12 = other males, other females 13 = children, other males, females 14 = husband, other males, females 15 = children, husband, other males, females

Card 61 (Contraceptive knowledge and practice)

Question	Description	Location	Coding
	Card type	1-2	61
	Identification	3-10	
Q301	Know F.P. method	11	1 = yes 2 = no
Q302	No. methods known	12	1-6 7 = 7 + Blank = NA
Q304K	Knows pill	13	0 = yes (spontaneous) 1 = yes (probed) 2 = no
Q304U	Used pill	14	1 = yes 2 = no Blank = NA
Q305K	Knows IUD	15	Coding as for Q304K
Q305U	Used IUD	16	Coding as for Q304U
Q306K	Knows other female scientific	17	Coding as for Q304K

Question	Description	Location	Coding
Q306U	Used other female scientific	18	Coding as for Q304U
Q307K	Knows douche	19	Coding as for Q304K
Q307U	Used douche	20	Coding as for Q304U
Q308K	Knows condom	21	Coding as for Q304K
Q308U	Used condom	22	Coding as for Q304U
Q309K	Knows rhythm method	23	Coding as for Q304K
Q309U	Used rhythm method	24	Coding as for Q304U
Q310K	Knows withdrawal	25	Coding as for Q304 K
Q310U	Used withdrawal	26	Coding as for Q304U
Q311K	Knows abstention	27	Coding as for Q304K
Q311U	Used abstention	28	Coding as for Q304U
Q312K	Knows female sterilization	29	Coding as for Q304K
Q313K	Knows male sterilization	30	Coding as for Q304K
Q314K	Knows other method	31	Coding as for Q304K
Q314M	Other method	32-33	1-15 as for Q317
Q314U	Used other method	34	Coding as for Q304U
Q315	Used any F.P. method (filter)	47	1 = yes 2 = no
Q316	Used any F.P. method (probe)	48	1 = yes 2 = no Blank = NA
Q317	Method used	49-50	01 = pill 02 = IDU 03 = female scientific 04 = douche 05 = condom 06 = rhythm 07 = withdrawal 08 = abstention 09 = female sterilization 10 = male sterilization 11 = injection 12 = Country method 1 13 = Country method 2 14 = Country method 3 15 = any other method Blank = NA

Card 71 (Marriage history)

Question	Description	Location	Coding
	Card type	1-2	71
	Identification	3-10	
Q401	Current marital status	11	1 = married 2 = widowed 3 = divorced 4 = separated
Q402	Married more than once (not currently married)	12	1 = once 2 = 2+ Blank = NA
Q403M	Month of marriage	13-14	01-12 22 = (years = years ago) Blank = NA
Q403Y	Year of marriage	15-16	24-74 Blank = NA
Q404	Husband lives in house	17	1 = yes 2 = no Blank = NA
Q405	Husband away permanently	18	1 = no (time being) 2 = yes (for good) Blank = NA
Q406M	Month of separation	19-20	01-12 99 = N.S. Blank = NA
Q406Y	Year of separation	21-22	Blank = NA
Q407	Married more than once (currently married)	23	1 = yes 2 = no Blank = NA
Q408	No. of marriages	24	1-4 Blank = NA
Q409M1	Month of marriage (1st)	25-26	01-12 22 = (years = years ago) Blank = NA 99 = NS
Q409Y1	Year of marriage (1st)	27-28	24-74 Blank = NA
Q41001	How marriage ended (1st)	29	1 = death 2 = divorce 3 = separation Blank = NA
Q411M1	Month marriage ended (1st)	30-31	Coding as for Q409M1
Q411Y1	Year marriage ended (1st)	32-33	Coding as for Q409Y1
Q409M2	Month of marriage (2nd)	34-35	Coding as for Q409M1
Q409Y2	Year of marriage (2nd)	36-37	Coding as for Q409Y1
Q41002	How marriage ended (2nd)	38	Coding as for Q41001
Q411M2	Month marriage ended (2nd)	39-40	Coding as for Q411M1
Q411Y2	Year marriage ended (2nd)	41-42	Coding as for Q411Y1

Question	Description	Location	Coding
Q409M3	Month of marriage (3rd)	43-44	
Q409Y3	Year of marriage (3rd)	45-46	
Q41003	How marriage ended (3rd)	47	
Q411M3	Month marriage ended (3rd)	48-49	
Q411Y3	Year marriage ended (3rd)	50-51	
Q409M4	Month of marriage (4th)	52-53	
Q409Y4	Year of marriage (4th)	54-55	
Q41004	How marriage ended (4th)	56	
Q411M4	Month marriage ended (4th)	57-38	
Q411Y4	Year marriage ended (4th)	59-60	
Q413	Presence of others (marriage history)	61	Coding as for Q239 in birth history

Card 81 (Family planning use)

Question	Description	Location	Coding
	Card type	1-2	81
	Identification	3-10	
Q501	Currently married (filter)	11	1 = yes, living with husband 2 = no
Q502	Currently pregnant (filter)	12	1 = yes 2 = no, don't know Blank = NA
Q503	Ever used F.P. (filter)	13	1 = yes 2 = no Blank = NA
Q504	Currently using F.P.	14	1 = yes 2 = no Blank = NA
Q505	Current method	15-16	Coding as for Q317
Q506	Any live births? (filter)	17	1 = none 2 = 1 + Blank = NA
Q507	Used F.P. since last child's birth	18	1 = yes 2 = no Blank = NA
Q508	Last method used	19-20	Coding as for Q317
Q509	Physically able to have child	21	1 = yes 2 = no 3 = DK Blank = NA

Question	Description	Location	Coding
Q510	Sterilized	22	1 = yes 2 = no Blank = NA
Q511	Sterilized for F.P.	23	Coding as for Q510
Q512	Husband sterilized	24	Coding as for Q510
Q513	Any live births? (filter)	25	Coding as for Q506
Q514	Desire children (R has no children)	26	1 = yes 2 = no 3 = undecided Blank = NA
Q515	Sex preference for first child	27	1 = boy 2 = girl 3 = either Blank = NA
Q516	No. of children desired	28-29	0-25 Blank = NA
Q517	Want another child (R has children)	30	Coding as for Q514
Q518	Sex preference for next child	31	Coding as for Q515
Q519	No. more children desired	32-33	Coding as for Q516
Q520	Want another child (R pregnant)	34	Coding as for Q514
Q521	No. more children desired	35-36	Coding as for Q516
Q522	Used F.P. (filter)	37	1 = yes 2 = no
Q523	Intend using F.P.	38	1 = yes 2 = no 3 = undecided Blank = NA
Q524	Currently pregnant (filter) (R not currently married)	39	1 = yes 2 = no 3 = DK Blank = NA
Q525	Sterilized (ncm)	40	Coding as for Q510
Q526	Sterilized for F.P. (ncm)	41	Coding as for Q511
Q527	Used F.P. (filter) (ncm)	42	1 = yes 2 = no Blank = NA
Q528	Any live births? (filter)	43	Coding as for Q513
Q529	Used F.P. since last child	44	1 = yes 2 = no Blank = NA
Q530	Last F.P. method used	45-46	Coding as for Q317
Q531	Total children desired	47-48	0-25

Card 91 (Work history and husband's data)

Question	Description	Location	Coding
	Card type	1-2	91
	Identification	3-10	
Q601	Currently working	11	1 = yes 2 = no
Q602	Worked since first marriage	12	1 = yes 2 = no Blank = NA
Q603	Last year worked	13-14	34-74 Blank = NA
Q604	Occupation since marriage	15-17	See coding manual
Q605	Farming	18	1 = yes 2 = no Blank = NA
Q606	Family farm	19	Coding as for Q605
Q607	Work home or away	20	1 = home 2 = away Blank = NA
Q608	Employer	21	1 = family member 2 = someone else 3 = self employed Blank = NA
Q609	Kind of payment	22	1 = cash 2 = kind 3 = unpaid Blank = NA
Q610	Years worked since first marriage	23-24	Blank = NA
Q611	Any live births (filter)	25	1 = none 2 = 1 + Blank = NA
Q612	Work in first birth interval	26	1 = yes 2 = no Blank = NA
Q613	Work before first marriage	27	1 = yes 2 = no
Q614	Years worked before first marriage	28-29	Blank = NA
Q615	Occupation before first marriage	30-32	See coding manual
Q616	Employer (before marriage)	33	Coding as for Q608
Q617	Kind of payment (before marriage)	34	Coding as for Q609
Q703	Husband attended school	35	1 = yes 2 = no
Q704	Husband's highest education level	36	1 = primary 2 = secondary 3 = university Blank = NA
Q705	Husband's highest grade	37	1-7 years Blank = NA
Q707	Husband can read	38	1 = yes 2 = no

Question	Description	Location	Coding
Q708	Husband's childhood residence	39	1 = countryside 2 = town 3 = city
Q709	Husband's occupation	40-42	See coding manual
Q710	Husband's employer	43	1 = family member 2 = somebody else 3 = self employed Blank = NA
Q711	Husband's type of payment	44	1 = cash 2 = kind 3 = unpaid Blank = NA
Q712	Husband has employees	45	1 = yes 2 = no Blank = NA
Q713	Husband's No. of employees	46-47	Blank = NA
DCOOP	Degree of co-operation	48	1 = bad 2 = average 3 = good 4 = very good

Machine Readable Codebook For Recoded Data

BLANK PAGE

```
*********************************************************************
*                                        *                          *
*        /\                              *                          *
*    /  //\\  \    World Fertility Survey * world                   *
*   // ///\\\ \\                          * Fertility Survey         *
*  //////  \\\\\\  International          *                          *
*   ////    \\\\   Statistical            *                          *
*    //      \\    Institute              ****************************
* \\\\\\\  ///////                        *                          *
* \\       ///     35-37 Grosvenor Gardens *                         *
*  \\\\\\  //////  London SW1W 0BS         * Dictionary for           *
*   \\       ///   United Kingdom         * core questionnaire       *
*    \\    ////                           * standard recode data     *
*                                        *                          *
*********************************************************************
*                                                                   *
*                                                                   *
*                                                                   *
*                                                                   *
* THIS DOCUMENT CONTAINS THREE TYPES OF RECORD (OR LINE),           *
* DISTINGUISHED BY THE CHARACTER PRINTED IN COLUMN 1:               *
*                                                                   *
*                                                                   *
*     STAR (*)              - A COMMENT.                            *
*     ALPHABETIC CHARACTER - A VARIABLE DEFINITION RECORD.          *
*     BLANK                 - A VALUE DEFINITION RECORD.            *
*                                                                   *
*   VARIABLE DEFINITION RECORDS ARE USED TO PROVIDE NAMES AND       *
*   LABELS FOR VARIABLES, TO DEFINE THEIR LOCATION IN THE FILE,     *
*   AND TO STATE THEIR RANGE AND SPECIAL CODES. THE FORMAT OF A     *
*   VARIABLE DEFINITION RECORD IS AS FOLLOWS:                       *
*                                                                   *
*                                                                   *
*     ALPHANUMERIC VALUES ARE LEFT  JUSTIFIED                       *
*                                                                   *
*     NUMERIC      VALUES ARE RIGHT JUSTIFIED                       *
*                                                                   *
*                                                                   *
*                                                                   *
*   COLUMN  CONTENTS            REMARKS.                            *
*                                                                   *
*   1-6     VARIABLE NAME       IDENTIFIES THE VARIABLE; UP TO 6    *
*                               CHARACTERS.                         *
*                                                                   *
*                                                                   *
*   10-13   STARTING LOCATION   COLUMN WHERE VARIABLE STARTS.       *
*                                                                   *
*   15-16   LENGTH              NUMBER OF COLUMNS OCCUPIED BY       *
*                               VARIABLE.                           *
*                                                                   *
*   17-20   MINIMUM             LOWEST VALUE OF VARIABLE.           *
*                                                                   *
*   21-24   MAXIMUM             HIGHEST VALUE OF VARIABLE, OTHER    *
*                               THAN, NOT APPLICABLE, OR SPECIAL CODES.*
*   26-29   NOT APPLICABLE      CODE USED FOR, NOT APPLICABLE, IF ANY; *
*                               OTHERWISE LEFT BLANK.               *
*                                                                   *
*   31-34   SPECIAL CODE        ANY CODE EQUAL TO OR GREATER THAN   *
*                               THIS VALUE REQUIRES SPECIAL         *
*                               TREATMENT IN ANALYSIS; USUALLY      *
```

```
*                                CODE USED FOR NOT STATED, IF ANY.      *
*                                                                       *
*   36-65   VARIABLE LABEL       DESCRIBES THE VARIABLE MORE FULLY      *
*                                THAN THE NAME; UP TO 30 CHARACTERS.    *
*                                                                       *
*   67-71   VALUE LABEL REF      IF THE CODES FOR THIS VARIABLE         *
*                                HAVE THE SAME LABELS AS THE CODES      *
*                                FOR A PREVIOUSLY DEFINED VARIABLE,     *
*                                THE NAME OF THE PREVIOUS VARIABLE      *
*                                IS CODED HERE.                         *
*                                                                       *
*************************************************************************
*                                                                       *
*                                                                       *
*   VALUE DEFINITION RECORDS FOLLOW A VARIABLE DEFINITION RECORD        *
*   AND ARE USED TO PROVIDE LABELS DESCRIBING THE MEANING OF THE        *
*   CODES OF THE VARIABLE.  IF USED IN CONJUNCTION WITH A VALUE         *
*   LABEL REFERENCE (IN THE VARIABLE DEFINITION RECORD) THEY CAN        *
*   BE USED TO ADD NEW CODES OR TO REDEFINE THE LABELS OF OLD CODES.    *
*   THE FORMAT OF A VALUE DEFINITION RECODE IS AS FOLLOWS:              *
*                                                                       *
*   COLUMN   CONTENTS            REMARKS                                *
*                                                                       *
*   36-39    VALUE               THE CODE BEING DEFINED.                *
*   44-63    LABEL               UP TO 20 CHARACTERS, LEFT JUSTIFIED.   *
*                                                                       *
*************************************************************************
*                                                                       *
*                                                                       *
*   COLUMNS 73-80 OF ALL DICTIONARY RECORDS ARE RESERVED FOR A          *
*   SEQUENCE NUMBER.                                                    *
*                                                                       *
*   ALL VALUES ARE CODED RIGHT JUSTIFIED IN THEIR FIELD, WHILE NAMES    *
*   AND LABELS ARE CODED LEFT JUSTIFIED.                                *
*                                                                       *
*************************************************************************
*                                 *** GROUP 0 ***                       *
*************************************************************************
*                                 -SAMPLING INFORMATION                 *
*************************************************************************
V001        1 16                  IDENTIFICATION
V002       17  2   1  @@          DOMAIN
V003       19  4@@@@@@@@          STRATUM
V004       23  4@@@@@@@@          PRIMARY SAMPLING UNIT
V005       27  4@@@@@@@@          ULTIMATE AREA UNIT
V006       31  410001000          SAMPLE WEIGHT(3 DECIMALS)
*************************************************************************
*                                 -REFERENCE DATES AND AGE              *
*************************************************************************
V007       35  4@@@@@@@@          DATE OF INTERVIEW (CMC)
V008       39  4@@@@@@@@          DATE OF BIRTH (CMC)
V009       43  2  @@  @@          YEAR OF BIRTH
V010       45  2  15  49          AGE IN COMPLETED YEARS
V011       47  2   1   7          AGE (5 YR GRPS)
                                     1    (20
                                     2    20-24
                                     3    25-29
                                     4    30-34
                                     5    35-39
                                     6    40-44
```

```
                                        7    45+
V012      49  2   1   4            AGE (10 YR GRPS)
                                        1    (25
                                        2    25-34
                                        3    35-44
                                        4    45+
*********************************************************************
*                                  *** MARRIAGE HISTORY ***         *
*********************************************************************
*                                  -FIRST UNION                     *
*********************************************************************
M011      51  1   1   2    8       TYPE OF UNION (1)
                                        1    MARRIAGE
                                        2    COMMON LAW
                                        8    INAPPLICABLE
M012      52  4@@@@@@@@ 8888       DATE OF UNION (1) (CMC)
                                   8888    INAPPLICABLE
M013      56  1   1   4    8    9 STATUS OF UNION (1)
                                        1    MARRIED
                                        2    WIDOWED
                                        3    DIVORCED
                                        4    SEPARATED
                                        8    INAPPLICABLE
                                        9    NOT STATED
M014      57  4@@@@@@@@ 8808       DATE OF DISSOLUTION (1) (CMC)
                                   8888    NOT DISSOLVED
*********************************************************************
*                                  -SECOND TO EIGHTH UNION          *
*********************************************************************
M021      61  1   1   2    8       TYPE OF UNION (2)
                                        1    MARRIAGE
                                        2    COMMON
                                        8    INAPPLICABLE
M022      62  4@@@@@@@@ 8888       DATE OF UNION (2) (CMC)
                                   8888    INAPPLICABLE
M023      66  1   1   4    8    9 STATUS OF UNION (2)
                                        1    MARRIED
                                        2    WIDOWED
                                        3    DIVORCED
                                        4    SEPARATED
                                        8    INAPPLICABLE
                                        9    NOT STATED
M024      67  4@@@@@@@@ 8888       DATE OF DISSOLUTION (2) (CMC)  M014
*
M031      71  1   1   2    8       TYPE OF UNION (3)              M021
M032      72  4@@@@@@@@ 8888       DATE OF UNION (3) (CMC)        M022
M033      76  1   1   4    8    9 STATUS OF UNION (3)             M023
M034      77  4@@@@@@@@ 8888       DATE OF DISSOLUTION (3) (CMC)  M014
*
M041      81  1   1   2    8       TYPE OF UNION (4)              M021
M042      82  4@@@@@@@@ 8888       DATE OF UNION (4) (CMC)        M022
M043      86  1   1   4    8    9 STATUS OF UNION (4)             M023
M044      87  4@@@@@@@@ 8888       DATE OF DISSOLUTION (4) (CMC)  M014
*
*   ONLY DATA FROM 4 MARRIAGES AVAILABLE.   LOCATIONS 91-130 NOT USED
*********************************************************************
*                                  *** GROUP 1 ***                  *
*                                                                   *
*                                  -MARITAL STATUS                  *
*********************************************************************
```

```
V101      131  2   0   8            TIMES MARRIED
V102      133  2   0   4            TIMES MARRIED (4+)
                                       4    4+
V103      135  2   0   1            EVER MARRIED
                                       0    NO
                                       1    YES
V104      137  2   1   4   88   99 STATUS OF FIRST UNION
                                       1    MARRIED
                                       2    WIDOWED
                                       3    DIVORCED
                                       4    SEPARATED
                                      88    NEVER MARRIED
                                      99    NOT STATED
V105      139  2   0   1   88       FIRST UNION DISSOLVED
                                       0    NO
                                       1    YES
                                      88    NEVER MARRIED
V106      141  2   0   1   88       REMARRIED
                                       0    NO
                                       1    YES
                                      88    NOT DISSOLVED
V107      143  2   1   4   88   99 CURRENT MARITAL STATUS          V104
V108      145  2   0   1   88       CURRENTLY MARRIED              V105
*****************************************************************************
*                                  -AGE AT MARRIAGE                         *
*****************************************************************************
V109      147  2  10  49   88       AGE AT FIRST MARRIAGE
                                      88    NEVER MARRIED
V110      149  2   1   7   88       AGE AT FIRST MARRIAGE (7 GRPS)
                                       1    (15
                                       2    15-17
                                       3    18-19
                                       4    20-21
                                       5    22-24
                                       6    25-29
                                       7    30 +
                                      88    NEVER MARRIED
V111      151  2   1   5   88       AGE AT FIRST MARRIAGE (5 GRPS)
                                       1    (15
                                       2    15-19
                                       3    20-24
                                       4    25-29
                                       5    30+
                                      88    NEVER MARRIED
V112      153  2   1   2   88       AGE AT FIRST MARRIAGE (2 GRPS)
                                       1    (20
                                       2    20+
                                      88    NEVER MARRIED
V113      155  2   0   1            AGE > 24 AND MARRIED < 25
                                       0    NO
                                       1    YES
*****************************************************************************
*                                  -MARITAL DURATION                        *
*****************************************************************************
V114      157  4   0 500 8888       MONTHS SPENT IN MARITAL STATE
                                    8888    NEVER MARRIED
V115      161  4   0 500 8888       MONTHS SINCE FIRST MARRIED     V114
V116      165  2   0  39   88       YS SINCE 1ST MARRIED
                                      88    NEVER MARRIED
V117      167  2   1   7   88       YS SINCE 1ST MARRIED (5 Y GPS)
```

```
                                        1    <5
                                        2     5- 9
                                        3    10-14
                                        4    15-19
                                        5    20-24
                                        6    25-29
                                        7    30+
                                       88    NEVER MARRIED
V118      169  2   1   4   88       YS SINCE 1ST MARRIED(10 Y GPS)
                                        1    <10
                                        2    10-19
                                        3    20-29
                                        4    30+
                                       88    NEVER MARRIED
V119      171  2   1   4   88       YS SINCE 1ST MARRIED <4 GPS>
                                        1    <5
                                        2     5- 9
                                        3    10-19
                                        4    20+
                                       88    NEVER MARRIED
V120      173  2   1   3   88       YS SINCE 1ST MARRIED <3 GRPS>
                                        1    <10
                                        2    10-19
                                        3    20+
                                       88    NEVER MARRIED
V121      175  2   0   1            FIRST MARRIED 5+ YEARS AGO
                                        0    NO
                                        1    YES
V122      177  2   0   1            FIRST UNION LASTED 5+ YEARS    V121
V123      179  2   0   1            CURRENTLY MARRIED 5+ YEARS     V121
*********************************************************************
*                                  *** BIRTH HISTORY ***            *
*********************************************************************
*                                 -FIRST BIRTH                      *
*********************************************************************
B011      181  1   1   1    8       ORDER WITHIN MULT BIRTH <1>
                                        1    FIRST
                                        8    NOT APPLICABLE
B012      182  4@@@@@@@@ 8888       DATE OF BIRTH <1> <CMC>
                                     8888    NOT APPLICABLE
B013      186  1   1   2    8       SEX OF CHILD <1>
                                        1    MALE
                                        2    FEMALE
                                        8    NOT APPLICABLE
B014      187  2   0  @@   88   99 AGE AT DEATH <COMP YRS> <1>
                                       88    NOT APPLICABLE
                                       99    NOT STATED
B015      189  2   0  11   88   99 AGE AT DEATH <COMP MNTHS> <1>
                                       88    NOT APPLICABLE
                                       99    NOT STATED
*********************************************************************
*                                 -SECOND TO 24TH BIRTHS            *
*********************************************************************
B021      191  1   1   2    8       ORDER WITHIN MULT BIRTH <2>
                                        1    FIRST
                                        2    SECOND
                                        8    NOT APPLICABLE
B022      192  4@@@@@@@@ 8888       DATE OF BIRTH <2> <CMC>        B012
B023      196  1   1   2    8       SEX OF CHILD <2>               B013
B024      197  2   0  @@   88       AGE AT DEATH <COMP YRS> <2>    B014
```

```
B025      199  2   0  11   88      AGE AT DEATH (COMP MNTHS) (2)  B015
*
B031      201  1   1   3    8      ORDER WITHIN MULT BIRTH (3)
                                      1    FIRST
                                      2    SECOND
                                      3    THIRD OR HIGHER
                                      8    NOT APPLICABLE
B032      202  4@@@@@@@@ 8888      DATE OF BIRTH (3) (CMC)          B012
B033      206  1   1   2    8      SEX OF CHILD (3)                 B013
B034      207  2   0  @@   88      AGE AT DEATH (COMP YRS) (3)      B014
B035      209  2   0  11   88      AGE AT DEATH (COMP MNTHS) (3)    B015
*
B041      211  1   1   3    8      ORDER WITHIN MULT BIRTH (4)      B031
B042      212  4@@@@@@@@ 8888      DATE OF BIRTH (4) (CMC)          B012
B043      216  1   1   2    8      SEX OF CHILD (4)                 B013
B044      217  2   0  @@   88      AGE AT DEATH (COMP YRS) (4)      B014
B045      219  2   0  11   88      AGE AT DEATH (COMP MNTHS) (4)    B015
*
B051      221  1   1   3    8      ORDER WITHIN MULT BIRTH (5)      B031
B052      222  4@@@@@@@@ 8888      DATE OF BIRTH (5) (CMC)          B012
B053      226  1   1   2    8      SEX OF CHILD (5)                 B013
B054      227  2   0  @@   88      AGE AT DEATH (COMP YRS) (5)      B014
B055      229  2   0  11   88      AGE AT DEATH (COMP MNTHS) (5)    B015
*
B061      231  1   1   3    8      ORDER WITHIN MULT BIRTH (6)      B031
B062      232  4@@@@@@@@ 8888      DATE OF BIRTH (6) (CMC)          B012
B063      236  1   1   2    8      SEX OF CHILD (6)                 B013
B064      237  2   0  @@   88      AGE AT DEATH (COMP YRS) (6)      B014
B065      239  2   0  11   88      AGE AT DEATH (COMP MNTHS) (6)    B015
*
B071      241  1   1   3    8      ORDER WITHIN MULT BIRTH (7)      B031
B072      242  4@@@@@@@@ 8888      DATE OF BIRTH (7) (CMC)          B012
B073      246  1   1   2    8      SEX OF CHILD (7)                 B013
B074      247  2   0  @@   88      AGE AT DEATH (COMP YRS) (7)      B014
B075      249  2   0  11   88      AGE AT DEATH (COMP MNTHS) (7)    B015
*
B081      251  1   1   3    8      ORDER WITHIN MULT BIRTH (8)      B031
B082      252  4@@@@@@@@ 8888      DATE OF BIRTH (8) (CMC)          B012
B083      256  1   1   2    8      SEX OF CHILD (8)                 B013
B084      257  2   0  @@   88      AGE AT DEATH (COMP YRS) (8)      B014
B085      259  2   0  11   88      AGE AT DEATH (COMP MNTHS) (8)    B015
*
B091      261  1   1   3    8      ORDER WITHIN MULT BIRTH (9)      B031
B092      262  4@@@@@@@@ 8888      DATE OF BIRTH (9) (CMC)          B012
B093      266  1   1   2    8      SEX OF CHILD (9)                 B013
B094      267  2   0  @@   88      AGE AT DEATH (COMP YRS) (9)      B014
B095      269  2   0  11   88      AGE AT DEATH (COMP MNTHS) (9)    B015
*
B101      271  1   1   3    8      ORDER WITHIN MULT BIRTH (10)     B031
B102      272  4@@@@@@@@ 8088      DATE OF BIRTH (10) (CMC)         B012
B103      276  1   1   2    8      SEX OF CHILD (10)                B013
B104      277  2   0  @@   88      AGE AT DEATH (COMP YRS) (10)     B014
B105      279  2   0  11   88      AGE AT DEATH (COMP MNTHS) (10)   B015
*
B111      281  1   1   3    8      ORDER WITHIN MULT BIRTH (11)     B031
B112      282  4@@@@@@@@ 8888      DATE OF BIRTH (11) (CMC)         B012
B113      286  1   1   2    8      SEX OF CHILD (11)                B013
B114      287  2   0  @@   88      AGE AT DEATH (COMP YRS) (11)     B014
B115      289  2   0  11   88      AGE AT DEATH (COMP MNTHS) (11)   B015
*
```

```
B121      291  1    1    3     8       ORDER WITHIN MULT BIRTH (12)   B031
B122      292  4@@@@@@@@ 8888          DATE OF BIRTH (12) (CMC)       B012
B123      296  1    1    2     8       SEX OF CHILD (12)              B013
B124      297  2    0   @@    88       AGE AT DEATH (COMP YRS) (12)   B014
B125      299  2    0   11    88       AGE AT DEATH (COMP MNTHS) (12) B015
*
B131      301  1    1    3     8       ORDER WITHIN MULT BIRTH (13)   B031
B132      302  4@@@@@@@@ 8888          DATE OF BIRTH (13) (CMC)       B012
B133      306  1    1    2     8       SEX OF CHILD (13)              B013
B134      307  2    0   @@    88       AGE AT DEATH (COMP YRS) (13)   B014
B135      309  2    0   11    88       AGE AT DEATH (COMP MNTHS) (13) B015
*
B141      311  1    1    3     8       ORDER WITHIN MULT BIRTH (14)   B031
B142      312  4@@@@@@@@ 8888          DATE OF BIRTH (14) (CMC)       B012
B143      316  1    1    2     8       SEX OF CHILD (14)              B013
B144      317  2    0   @@    88       AGE AT DEATH (COMP YRS) (14)   B014
B145      319  2    0   11    88       AGE AT DEATH (COMP MNTHS) (14) B015
*
B151      321  1    1    3     8       ORDER WITHIN MULT BIRTH (15)   B031
B152      322  4@@@@@@@@ 8888          DATE OF BIRTH (15) (CMC)       B012
B153      326  1    1    2     8       SEX OF CHILD (15)              B013
B154      327  2    0   @@    88       AGE AT DEATH (COMP YRS) (15)   B014
B155      329  2    0   11    88       AGE AT DEATH (COMP MNTHS) (15) B015
*
B161      331  1    1    3     8       ORDER WITHIN MULT BIRTH (16)   B031
B162      332  4@@@@@@@@ 8888          DATE OF BIRTH (16) (CMC)       B012
B163      336  1    1    2     8       SEX OF CHILD (16)              B013
B164      337  2    0   @@    88       AGE AT DEATH (COMP YRS) (16)   B014
B165      339  2    0   11    88       AGE AT DEATH (COMP MNTHS) (16) B015
*  ONLY DATA FROM 16 BIRTHS AVAILABLE.   LOCATIONS 341-420 NOT USED
*****************************************************************
*                          *** GROUP 2 ***                      *
*****************************************************************
*                          -OTHER PREGNANCIES                   *
*****************************************************************
V201      421  2    0   10            WASTED PREGNANCIES
V202      423  2    0   10            STILL BIRTHS
V203      425  2    0   10            SPONTANEOUS ABORTIONS
V204      427  2    0   10    88      INDUCED ABORTIONS
V205      429  2    0    9            DURATION OF CURRENT PREGNANCY
                                         0    NOT PREGNANT
V206      431  2    0    1            CURRENTLY PREGNANT
                                         0    NO
                                         1    YES
*****************************************************************
*                          -CHILDREN EVER BORN                  *
*****************************************************************
V207      433  2    0   24            FERTILE PREGNANCIES
V208      435  2    0   24            CHILDREN EVER BORN
V209      437  2    0    9            CHILDREN EVER BORN (9+)
                                         9    9+
V210      439  2    0    5            CHILDREN + CURR PREG (5+)
                                         5    5+
V211      441  2    1    2            CHILDREN BORN + CURR PREG < 4
                                         1    <4
                                         2    4+
V212      443  2    0   24            SONS EVER BORN
*****************************************************************
*                          -LIVING CHILDREN                     *
*****************************************************************
```

```
V213      445  2   0   24          LIVING CHILDREN
V214      447  2   0    9          LIVING CHILDREN (9+)                V209
V215      449  2   0    5          LIVING CHILDREN (5+)                V210
V216      451  2   1    4          LIVING CHILDREN (4 GRPS)
                                      1    (3
                                      2    3
                                      3    4
                                      4    5+
V217      453  2   1    3          LIVING CHILDREN (3 GRPS)
                                      1    (4
                                      2    4-6
                                      3    7+
V218      455  2   1    2          LIVING CHILDREN (2 GRPS)
                                      1    (4
                                      2    4+
V219      457  2   0    9          LIVING CHILDREN + CUR PREG(9+) V209
V220      459  2   0   24          LIVING SONS
V221      461  2   0    5          LIVING SONS (5+)                    V210
V222      463  2   0    5          LIVING DAUGHTERS (5+)               V210
*****************************************************************************
*                                 -PERIOD FERTILITY                         *
*****************************************************************************
V223      465  2   0    8   88     CHILDREN BORN IN 1ST 5 YRS
                                      88    NOT MARRIED 5+ YEARS
V224      467  2   0    8   88     SONS BORN IN 1ST 5 YRS              V223
V225      469  2   0    8          CHILDREN BORN IN PAST 5 YRS
V226      471  2   0    8          SONS BORN IN PAST 5 YRS
V227      473  2   0   24          LIVING CHILDREN 5 YRS AGO
*****************************************************************************
*                                 -BIRTH INTERVALS                          *
*****************************************************************************
V228      475  4   0 500 8888 6666 FIRST BIRTH INTERVAL (MONTHS)
                                    6666    NEGATIVE INTERVAL
V229      479  2   1    8          8888    NO FIRST INTERVAL
                                    FIRST BIRTH INTERVAL (8 GRPS)
                                      1    NEGATIVE INTERVAL
                                      2    0-7
                                      3    8-11
                                      4    12-23
                                      5    24-35
                                      6    36-47
                                      7    48-59
                                      8    60+ OR NOT APPLICABLE
V230      481  4   0 500 8888 6666 LAST CLOSED INTERVAL (MONTHS)
                                    6666    NEGATIVE INTERVAL
V231      485  2   1    5   88     8888    NO CLOSED INTERVAL
                                    LAST CLOSED INTERVAL (5 GRPS)
                                      1    (12
                                      2    12-23
                                      3    24-35
                                      4    36-47
                                      5    48+
                                     88    NOT APPLICABLE
V232      487  4   0 500 8888      OPEN INTERVAL (MONTHS)
                                    8888    NOT APPLICABLE
V233      491  2   1    5   88     OPEN INTERVAL (5 GRPS)
                                      1    (12
                                      2    12-23
                                      3    24-35
                                      4    36-47
```

```
                                        5     48+
                                       88     NOT APPLICABLE
V234      493  2   0   1            EVER MARRIED AND 1+ FERT PREG
                                        0     NO
                                        1     YES
V235      495  2   0   1            EVER MARRIED AND 2+ FERT PREG  V234
V236      497  2   0   1            AS V235 AND CLOSED INT (5 YRS  V234
*****************************************************************************
*                                   *** GROUP 3 ***                         *
*****************************************************************************
*                                   -BREASTFEEDING                          *
*****************************************************************************
V301      499  2   0  76   88   96 BREASTFED IN OPEN INT (MONTHS)
                                       88     NOT APPLICABLE
                                       96     STILL BREASTFEEDING
                                       97     UNTIL CHILD DIED
                                       98     DID NOT BREASTFEED
                                       99     NOT STATED
V302      501  2   0  76   88   98 BREASTFED IN CLOSED INT (MNTHS)V301
V303      503  2   1  18   88   99 LENGTH BREASTFED (18 GRPS)
                                        1     DID NOT BREASTFEED
                                        2     0-2
                                        3     3-5
                                        4     6
                                        5     7-8
                                        6     9-11
                                        7     12
                                        8     13-17
                                        9     18
                                       10     19-23
                                       11     24
                                       12     25-29
                                       13     30
                                       14     31-35
                                       15     36
                                       16     37-47
                                       17     48
                                       18     49+
                                       88     NOT APPLICABLE
                                       99     NOT STATED
V304      505  2   1  13   08   99 LENGTH BREASTFED (13 GRPS)
                                        1     DID NOT BREASTFEED
                                        2     0-2
                                        3     3-5
                                        4     6
                                        5     7-8
                                        6     9-11
                                        7     12
                                        8     13-17
                                        9     18
                                       10     19-23
                                       11     24 + 0
                                       12     24 + 1
                                       13     25+
                                       88     NOT APPLICABLE
                                       99     NOT STATED
V305      507  2   1  12   88   99 LENGTH BREASTFED (12 GRPS)
                                        1     DID NOT BREASTFEED
                                        2     0-2
                                        3     3-5
```

```
                                        4     6
                                        5     7-8
                                        6     9-11
                                        7     12
                                        8     13-17
                                        9     18
                                       10     19-23
                                       11     24
                                       12     25+
                                       88     NOT APPLICABLE
                                       99     NOT STATED
V306      509  2   0   1             INT > 32 AND CHILD LIVED > 24
                                        0     NO
                                        1     YES
*****************************************************************
*                                    *** GROUP 4 ***            *
*****************************************************************
*                                    -EXPOSURE STATUS           *
*****************************************************************
V401      511  2   1   4             HUSBAND OR WIFE STERILIZED
                                        1     WIFE (CONTRACEPTIVE)
                                        2     HUSBAND
                                        3     WIFE (NON-CNTRCPTVE)
                                        4     OTHER CASES
V402      513  2   1   5   88        EXPOSURE STATUS
                                        1     PREGNANT
                                        2     NOT EXPOSED
                                        3     SELF-SPOUSE STERLZED
                                        4     NOT FECUND
                                        5     FECUND
                                       88     NEVER EXPOSED
V403      515  2   0   1             MARRIED AND FECUND
                                        0     NO
                                        1     YES
V404      517  2   0   1             EXPOSED                          V403
V405      519  2   0   1             EXPOSED, NOT STRLZED, 1+ BIRTH V403
V406      521  2   0   1             CURR MARRIED AND NOT PREGNANT  V403
V407      523  2   0   1             EVER MARRIED AND NOT PREGNANT  V403
*****************************************************************
*                                    *** GROUP 5 ***            *
*****************************************************************
*                                    -FERTILITY PREFERENCES     *
*****************************************************************
V501      525  2   1   3   88   99 DESIRE FOR FUTURE BIRTH
                                        1     WANTS MORE
                                        2     WANTS NO MORE
                                        3     UNDECIDED
                                       88     NOT MARRIED  & FECUND
                                       99     NOT STATED
V502      527  2   0   1             MARRIED, FECUND, WANTS NO MORE
                                        0     NO
                                        1     YES
V503      529  2   0   1             EXPOSED, WANTS NO MORE          V502
V504      531  2   0   1             EXPOSED, WANTS MORE             V502
V505      533  2   1   3   88   99 LAST PREGNANCY
                                        1     WANTED
                                        2     NOT WANTED
                                        3     UNDECIDED
                                       88     NEVER HAD FERT PREG
                                       99     NOT STATED
```

```
V506      535  2   0   1   88   99 LAST PREGNANCY UNWANTED
                                     0    NO
                                     1    YES
                                    88    NEVER HAD FERT PREG
                                    99    NOT STATED
V507      537  2   0   1   88   99 PREFERS NEXT CHILD TO BE BOY
                                     0    NO
                                     1    YES
                                    88    NOT APPLICABLE
                                    99    NOT STATED
V508      539  2   0   1   88   99 PREFERS NEXT CHILD TO BE GIRL  V507
V509      541  2   0  18   88   66 ADDITIONAL CHILDREN WANTED
                                    66    LAST NOT WANTED
                                    88    NOT MARRIED & FECUND
                                    97    UNDECIDED
                                    98    OTHER ANSWERS
                                    99    NOT STATED
V510      543  2   0   5   88   66 ADDITIONAL CHILDREN WANTED(5+)
                                     5    5+
                                    66    LAST PREG UNWANTED
                                    88    NOT MARRIED  & FECUND
                                    97    UNDECIDED
                                    98    OTHER ANSWERS
                                    99    NOT STATED
V511      545  2   0  25        98 TOTAL CHILDREN DESIRED
                                    98    OTHER ANSWERS
                                    99    NOT STATED
V512      547  2   0   9        98 TOTAL CHILDREN DESIRED (9+)
                                     9    9+
                                    98    OTHER ANSWERS
                                    99    NOT STATED
V513      549  2   1   4        99 NUMBER DESIRED : NUMBER ALIVE
                                     1    DESIRED < LIVING
                                     2    DESIRED = LIVING
                                     3    DESIRED > LIVING
                                     4    OTHER ANSWERS
                                    99    NOT STATED
*****************************************************************
*                            *** GROUP 6 ***                    *
*****************************************************************
*                       -KNOWLEDGE OF BIRTH CONTROL             *
*****************************************************************
V601      551  2   0   2        99 KNOWS PILL
                                     0    NO
                                     1    YES (PROBED)
                                     2    YES (SPONTANEOUS)
                                    99    NOT STATED
V602      553  2   0   2        99 KNOWS OF IUD                  V601
V603      555  2   0   2        99 KNOWS OF OTHER FEMALE SCIENTFC V601
V604      557  2   0   2        99 KNOWS OF DOUCHE               V601
V605      559  2   0   2        99 KNOWS OF CONDOM               V601
V606      561  2   0   2        99 KNOWS OF RHYTHM METHOD        V601
V607      563  2   0   2        99 KNOWS OF WITHDRAWAL           V601
V608      565  2   0   2        99 KNOWS OF ABSTENTION           V601
V609      567  2   0   2        99 KNOWS OF FEMALE STERILIZATION V601
V610      569  2   0   2        99 KNOWS OF MALE STERILIZATION   V601
V611      571  2   0   2        99 KNOWS OF INJECTION            V601
V612      573  2   0   2        99 @@@@@@@@@@@@@@@@@@@@@@@@@@@@@ V601
V613      575  2   0   2        99 @@@@@@@@@@@@@@@@@@@@@@@@@@@@@ V601
V614      577  2   0   2        99 @@@@@@@@@@@@@@@@@@@@@@@@@@@@@ V601
```

```
V615      579  2   0   1          KNOWS OTHER METHOD
                                     0    NO
                                     1    YES
V616      581  2   1   3          TYPE OF METHOD KNOWN
                                     1    NONE
                                     2    INEFFICIENT ONLY
                                     3    EFFICIENT
V617      583  2   0   1          KNOWS ANY METHOD
                                     0    NO
                                     1    YES
*************************************************************************
*                          -EVER USE OF BIRTH CONTROL                   *
*************************************************************************
V618      585  2   0   1       99 EVER USED PILL
                                     0    NO
                                     1    YES
                                    99    NOT STATED
V619      587  2   0   1       99 EVER USED IUD                          V618
V620      589  2   0   1       99 EVER USED OTHER FEM SCIENTIFIC         V618
V621      591  2   0   1       99 EVER USED DOUCHE                       V618
V622      593  2   0   1       99 EVER USED CONDOM                       V618
V623      595  2   0   1       99 EVER USED RHYTHM METHOD                V618
V624      597  2   0   1       99 EVER USED WITHDRAWAL                   V618
V625      599  2   0   1       99 EVER USED ABSTENTION                   V618
V626      601  2   0   1          WIFE STERILZED (CONTRACEPTIVE)
                                     0    NO
                                     1    YES
V627      603  2   0   1          HUSBAND STERILIZED                     V626
V628      605  2   0   1       99 EVER USED INJECTION                    V618
V629      607  2  88  88  88       NOT USED
V630      609  2  88  88  88       NOT USED
V631      611  2  88  88  88       NOT USED
V632      613  2   0   1          EVER USED OTHER METHOD                 V617
V633      615  2   1   3          EVER USED EFFICIENT METHOD             V616
V634      617  2   0   1          EVER USED ANY METHOD                   V617
*************************************************************************
*                          -CURRENT USE OF BIRTH CONTROL                *
*************************************************************************
V635      619  2   0  15  88    99 METHOD CURRENTLY USED
                                     0    NONE
                                     1    PILL
                                     2    IUD
                                     3    OTHER FEM SCI
                                     4    DOUCHE
                                     5    CONDOM
                                     6    RHYTHM METHOD
                                     7    WITHDRAWAL
                                     8    ABSTINENCE
                                     9    FEMALE STERILIZATION
                                    10    MALE STERILIZATION
                                    11    INJECTION
                                    15    OTHER METHODS
                                    88    NOT EXPOSED
                                    99    NOT STATED
V636      621  2   1   3  88       TYPE OF CURRENT METHOD
                                     1    NOT USING
                                     2    USING INEFFICIENT
                                     3    USING EFFICIENT
                                    88    NOT EXPOSED
V637      623  2   0   1  88       CURRENTLY USING ANY METHOD
```

```
                                        0    NO
                                        1    YES
                                       88    NOT EXPOSED
V638      625  2   0   1            CURRENTLY USING EFFIC METHOD
                                        0    NO, NA
                                        1    YES
V639      627  2   0   1            USING EFFIC, WANTS NO MORE     V638
*********************************************************************
*                            -PATTERN OF USE OF BIRTH CONTROL       *
*********************************************************************
V640      629  2   0  15   88   99 METHOD USED IN CLOSED INTERVAL V635
                                       88    NO CLOSED INTERVAL
                                       99    NOT STATED
V641      631  2   1   3   88       TYPE USED IN CLOSED INTERVAL   V636
                                       88    NO CLOSED INTERVAL
V642      633  2   1   2   88       USE OF FP IN CLOSED INTERVAL
                                        1    YES
                                        2    NO
                                       88    NO CLOSED INTERVAL
V643      635  2   0  15   88   99 METHOD USED IN OPEN INTERVAL   V635
                                        0    DID NOT USE
                                       88    NO OPEN INTERVAL
V644      637  2   1   3   88       USE OF FP IN OPEN INTERVAL
                                        1    CURRENTLY USING
                                        2    USED IN OPEN
                                        3    DID NOT USE
                                       88    NO OPEN INTERVAL
V645      639  2   1   7   88       PATTERN OF CONTRACEPTIVE USE
                                        1    INTENDS USE
                                        2    INTENDS NO USE
                                        3    NEV USER NOT FECUND
                                        4    USED IN OPEN
                                        5    USED IN CLOSED
                                        6    STERILIZED
                                        7    CURRENT USER
                                       88    NEVER MARRIED
*********************************************************************
*                                  *** GROUP 7 ***                  *
*********************************************************************
*                                 -RESPONDENT'S BACKGROUND          *
*********************************************************************
V701      641  2   1  @@   @@   @@ REGION OF RESIDENCE
V702      643  2   1   3           TYPE OF PLACE OF RESIDENCE
                                        1    RURAL
                                        2    TOWN
                                        3    CITY
V703      645  2   1   3           CHILDHOOD PLACE OF RESIDENCE   V702
V704      647  2   0   3           LEVEL OF EDUCATION
                                        0    NONE
                                        1    PRIMARY
                                        2    SECONDARY
                                        3    UNIVERSITY
V705      649  2   1   2        99 LITERACY
                                        1    CAN READ
                                        2    CANNOT READ
                                       99    NOT STATED
V706      651  2  @@  @@   @@   @@ RELIGION
V707      653  2  @@  @@   @@   @@ ETHNIC GROUP
V708      655  2   0  @@   @@   @@ OCCUPATION BEFORE 1ST MARRIAGE
V709      657  2   1   8        99 WORK STATUS BEFORE MARRIAGE
```

```
                                        1    FAMILY PAID CASH
                                        2    FAMILY PAID KIND
                                        3    FAMILY UNPAID
                                        4    OTHER PAID CASH
                                        5    OTHER PAID KIND
                                        6    OTHER UNPAID
                                        7    SELF EMPLOYED
                                        8    DID NOT WORK
                                       99    NOT STATED
V710     659  2   0  @@   @@   @@ LAST OCCUPATION SINCE MARR      V708
V711     661  2   1  9         99 LAST WORK STATUS SINCE MARR
                                        1    FAMILY FARM
                                        2    FAMILY PAID CASH
                                        3    FAMILY PAID KIND
                                        4    FAMILY UNPAID
                                        5    OTHER PAID CASH
                                        6    OTHER PAID KIND
                                        7    OTHER UNPAID
                                        8    SELF EMPLOYED
                                        9    DID NOT WORK
                                       99    NOT STATED
V712     663  2   1  5         99 PLACE OF WORK SINCE MARR
                                        1    FAMILY FARM
                                        2    OTHER FARM
                                        3    AT HOME
                                        4    AWAY FROM HOME
                                        5    NO WORK SINCE UNION
                                       99    NOT STATED
V713     665  2   1  6         99 PATTERN OF WORK
                                        1    NOW AND BEFORE
                                        2    NOW NOT BEFORE
                                        3    SINCE AND BEFORE
                                        4    SINCE NOT BEFORE
                                        5    BEFORE ONLY
                                        6    NEVER WORKED
                                       99    NOT STATED
*****************************************************************************
*                                     *** GROUP 8 ***                       *
*****************************************************************************
*                                     -PARTNER'S BACKGROUND                 *
*****************************************************************************
V801     667  2   1  3         99 PARTNER'S CHILDHOOD RESIDENCE  V703
V802     669  2   0  3         99 PARTNER'S LEVEL OF EDUCATION   V704
V803     671  2   1  2         99 PARTNER'S LITERACY             V705
V804     673  2   0  @@   @@   @@ PARTNER'S OCCUPATION           V708
V805     675  2   1  10        99 PARTNER'S WORK STATUS
                                        1    FAMILY PAID CASH
                                        2    FAMILY PAID KIND
                                        3    FAMILY UNPAID
                                        4    OTHER PAID CASH
                                        5    OTHER PAID KIND
                                        6    OTHER UNPAID
                                        7    SELF EMPLOYED
                                        8    EMPLOYS 1-4
                                        9    EMPLOYS 5+
                                       10    NEVER WORKED
                                       99    NOT STATED
*****************************************************************************
*                                     *** GROUP 9 ***                       *
*****************************************************************************
```

```
*                                    -INTERVIEW DATA                    *
*********************************************************************
V901      677  2  @@  @@   @@   @@ INTERVIEWER NUMBER
V902      679  2   0  98        99 LENGTH OF INTERVIEW IN MINUTES
                                     98    98+
                                     99    NOT STATED
V903      681  2   1   4           NUMBER OF VISITS
V904      683  2   1   3        99 RELIABILITY OF BIRTH HISTORY
                                      1    GOOD
                                      2    FAIR
                                      3    POOR
                                     99    NOT STATED
V905      685  2   0  15        99 PRESENT FOR BIRTH HISTORY
                                      0    NO ONE
                                      1    CHILD(REN) UNDER 10
                                      2    HUSBAND
                                      3    HUSBAND, CHILDREN
                                      4    OTHER MALE(S)
                                      5    MALES, CHILDREN
                                      6    HUSBAND, MALES
                                      7    HUSBAND, MALES, CH.
                                      8    OTHER FEMALE(S)
                                      9    FEMALES, CHILDREN
                                     10    HUSBAND, FEMALES
                                     11    HUSBAND, FEMALE,CH.
                                     12    MALES, FEMALES
                                     13    MALES, FEMALES,CH.
                                     14    HUS., MALES, FEMALES
                                     15    HUS.,MAL.,FEM.,CH..
                                     99    NOT STATED
V906      687  2   0  15        99 PRESENT FOR UNION HISTORY      V905
V907      689  2   1   4        99 DEGREE OF CO-OPERATION
                                      1    BAD
                                      2    FAIR
                                      3    GOOD
                                      4    VERY GOOD
                                     99    NOT STATED
*
*  END OF DICTIONARY FOR CORE QUESTIONNAIRE STANDARD RECODE
*********************************************************************
```

BLANK PAGE

Test Data

BLANK PAGE

Test Data from the Core Questionnaire

```
0000000001111111112222222223333333334444444445555555556666666667777777778
1234567890123456789012345678901234567890123456789012345678901234567890123456789012345678901234567890
1000100100250474231   110511
1100100101 31  1114012211
1100100102 31  1123412311                    11
1100100103 4 0212209113
1100100104 4 0211106111
1100100105 4 02111042
2100100102250474233 51  11
3100100102110261104 4A  123            1   1021011012  10105
4100100102066211  09631202016521  126811  027011
5100100102109111 22     22                                                  209
6100100102130102 2 11012 2 212               1
7100100102 1   581     2
8100100102121101        2    1102   1        08
9100100102 1   42611   05211020261212 2 144021     3
1000100300260474232 1  210911
1100100301 18  11 852
1100100302 28  11 702
1100100303 3   21 511 13
1100100304 38  11 462
1100100305 4 04111111 15
1100100306 4 04111101 15
1100100307 4 04112081 13
1100100308 4 04112052
1100100309 5   212022
2200100344260474236021 21
3100100304210341299994 62  1          1   102105105103104 19
4100100304223011  22281203222712 01  4911    5021    5212    542202  551201
4200100304095611  015721  045821  095911  106021  333321  056111  016311
4300100304036411  056621  056921
5100100304112 12  2     2102995371999535                                    301
6100100304 2 122 2 2 12121111222              1
7100100304 22           222301  62086420570
8100100304 2                          22      05
9100100304 22               2       2  1132022   2
1000101500020574252221 310211
1100101501 31  111241111
1100101502 31  112161211                     21
1100101503 4 01111042
1100101503 31  1112111311
1100101504 31  1225212311
1100101505 4 01111022
1100101506 4 03112013
2100101502020574252022131
3100101502110571105 50  122          221
5100101502              100                                                 100
6100101502 2 2 2 2 2 2 2 2 2 222              2115
7100101502 1 06712104732
8100101502 122        1   2    1        21      06
9100101502216925022 21021 1 22502111412 8503 1022
1000200200250474161   110122
1100200201 3   112242  13                     11
2100200201250474164 51  11
3100200201120572199 50  2  2         1   1022  2  2  2  02
4100200201997011  067211
5100200201 2  1106112741 22                                                 203
6100200201 2 2 2 2 2 2 2 2 2 222              22
7100200201 31           106930173
8100200201 2                          1       10
9100200201 22               103620221 16 151021   3
2100200203250474163021 21
```

```
0000000001111111112222222223333333334444444445555555556666666667777777778
1234567890123456789012345678901234567890123456789012345678901234567890123456789012345678901234567890
3100200203120572107531  113           1   2  2  101       01
4100200203027311
5100200203106 2101037272                                                                    108
6100200203222 2 2 2 2 2 2 2 2 232              22
7100200203104721   2
8100200203122      211                         02
9100200203 2002 2 2101212       123 24203 2  4
1000200600270474161  110711
1100200601131  111502  11
1100200602131  112402  11                      11
1100200603402111151 14
1100200604402112061 11
1100200605 4  212071 12
1100200606402112 04
1100200607 2  212752  12
2100200602270474163 01  11
3100200602111241299994 02  1          1  1011011022  10105
4100200602222511  222311  2222120199682 1  997021
5100200602106110 92   200                                                                    101
6100200602140102221202021111112                1
7100200602101681    13  650636606671096 7
8100200602121 2  22  1   2    2      1          05
9100200602 22              102530122  2151021   3
1000300100030474261  110711
1100300101131  111271 3311
1100300102131  112262  11                      11
1100300103402111052
1100300104402111012
1100300105402112071 12
1100300106402112022
1100300107 5  112032
2100300102030474264 01  11
3100300102111241204 48  2  2          1  1022  1022  10408
4100300102026622020 56721  0768120133331201096911  127011  06721202067311
4200300102067411
5100300102112111 2     22                                                                   208
6100300102110 22 2 2 2 2 2 2 221131            1
7100300102104565    2
7100300102104565    2
8100300102121113      2    1301  1            12
9100300102 1  7052 12106222      133 213521   3
1000300200050474261  110111
1100300201 3  111322  14                      15
1100300401131  111301 1511
1100300402131  112222  11                      11
1100300403402112002
2100300201 05047426  5  15
2100300402060474225 1  11
3100300402111355206 52  2            12  2     1012  2   1
4100300402017421
5100300402 2      1087432                                                                   101
6100300402112 2 2 2 2 2 2 2 2 21               1
8100300402111                  1001           06
9100300402217325022 2101212      1151133021   2
1000400400060474221  110311
9993458765
```

Appendix II

DP Manual for Processing Data from the WFS Core Questionnaire

2. Planning and Control

DP Flowcharts

Programming and Data Processing Estimates

Bar Chart for Programming and Data Processing

DP Control Document

BLANK PAGE

Data Processing Flowcharts

BLANK PAGE

Overall DP phases

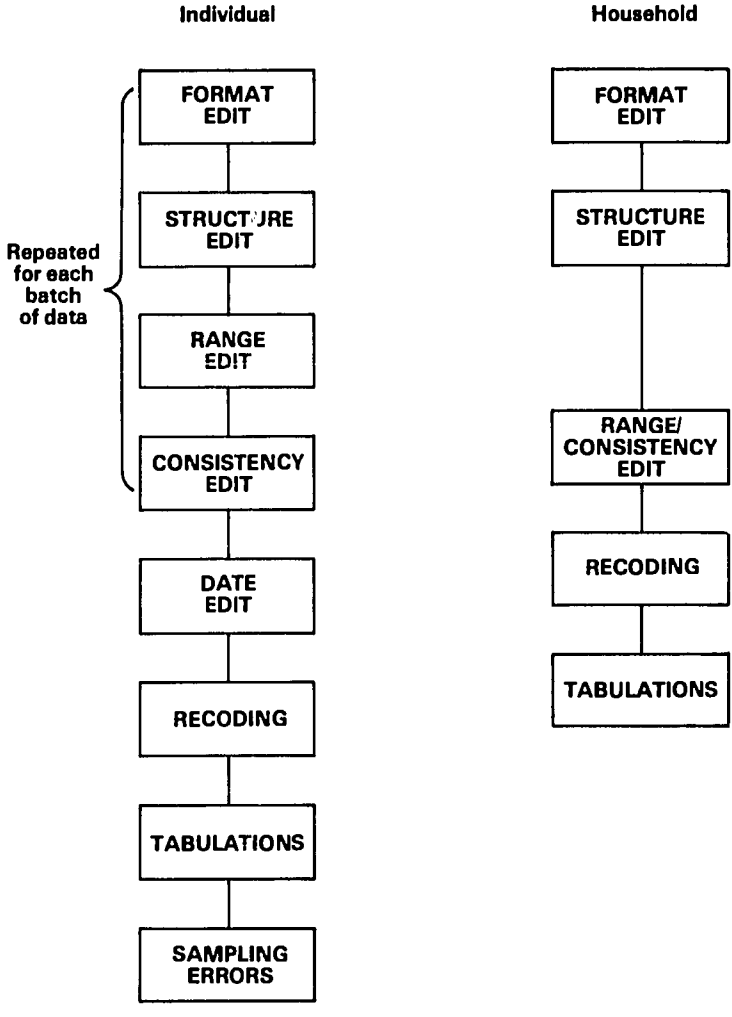

FORMAT EDIT (repeated for each batch of data)

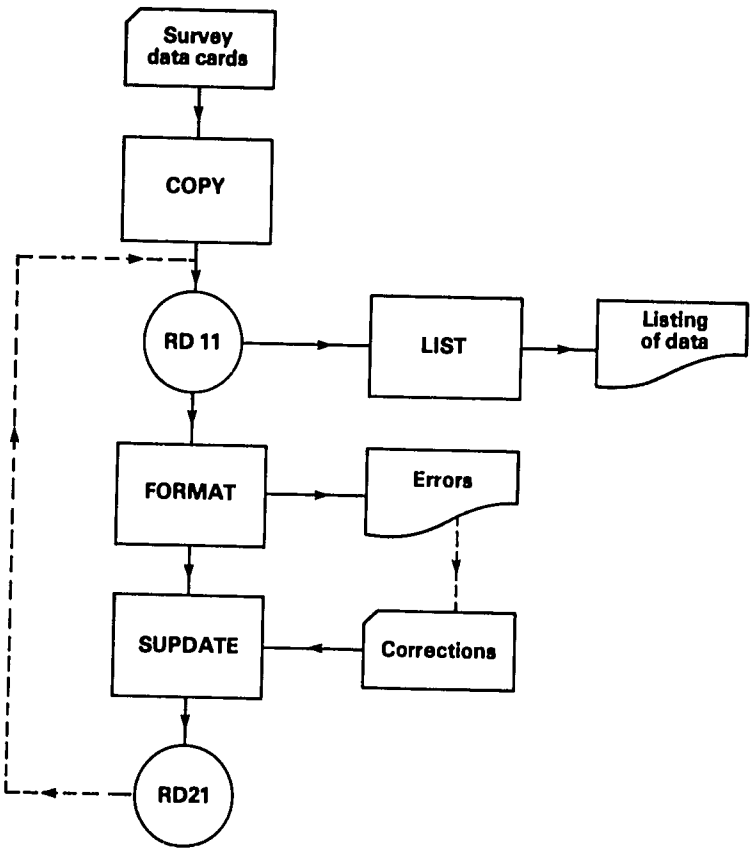

Programs required:

COPY (installation utility)
FORMAT (WFS program)
LIST (user program)
SUPDATE (WFS program)

STRUCTURE EDIT (Method 1) — Repeated for each batch of data

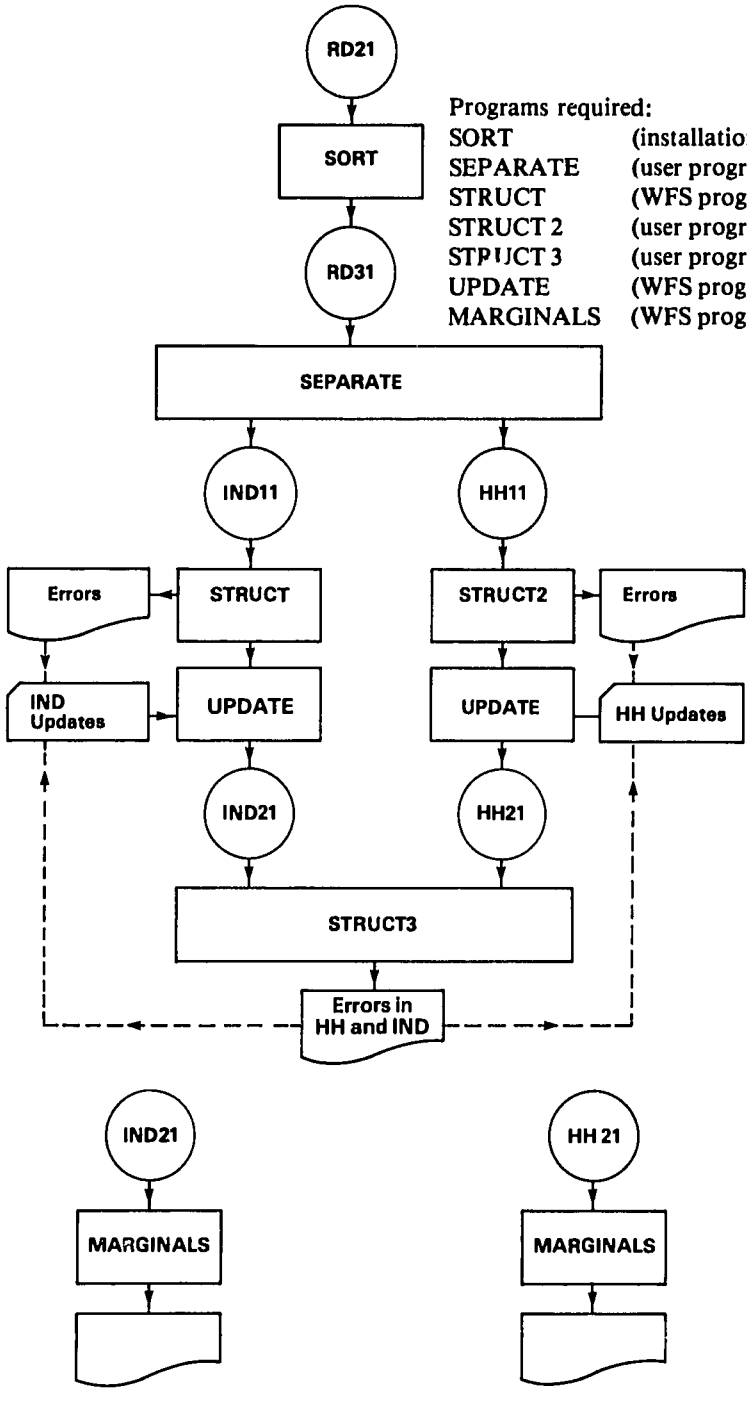

Programs required:

SORT	(installation utility)
SEPARATE	(user program)
STRUCT	(WFS program)
STRUCT 2	(user program)
STRUCT 3	(user program)
UPDATE	(WFS program)
MARGINALS	(WFS program)

STRUCTURE EDIT (Method 2)

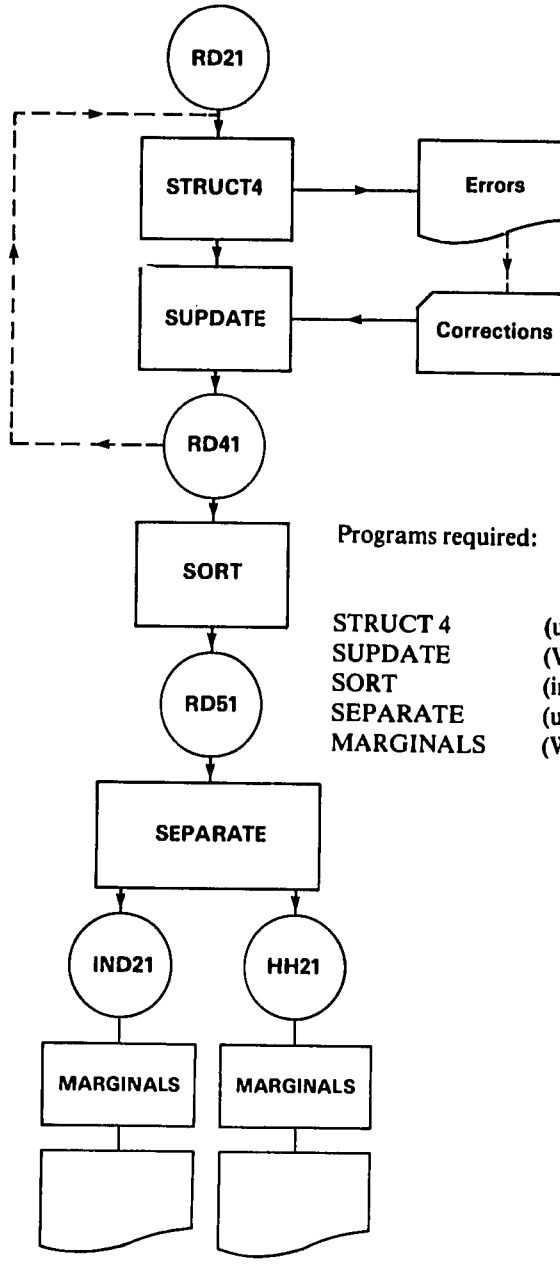

Programs required:

STRUCT 4	(user program)
SUPDATE	(WFS program)
SORT	(installation utility)
SEPARATE	(user program)
MARGINALS	(WFS program)

RANGE/CONSISTENCY/DATE EDIT

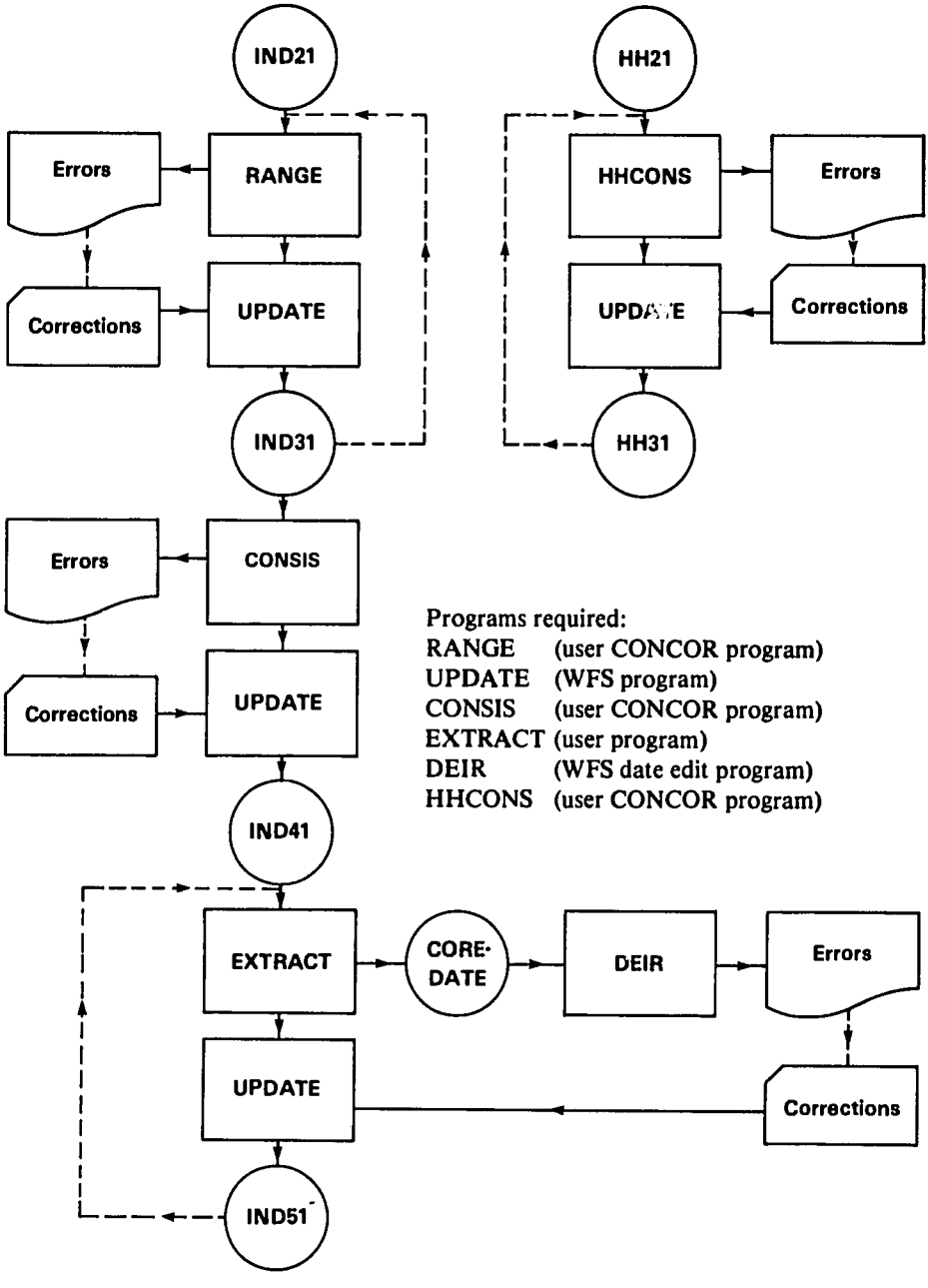

Programs required:

RANGE	(user CONCOR program)
UPDATE	(WFS program)
CONSIS	(user CONCOR program)
EXTRACT	(user program)
DEIR	(WFS date edit program)
HHCONS	(user CONCOR program)

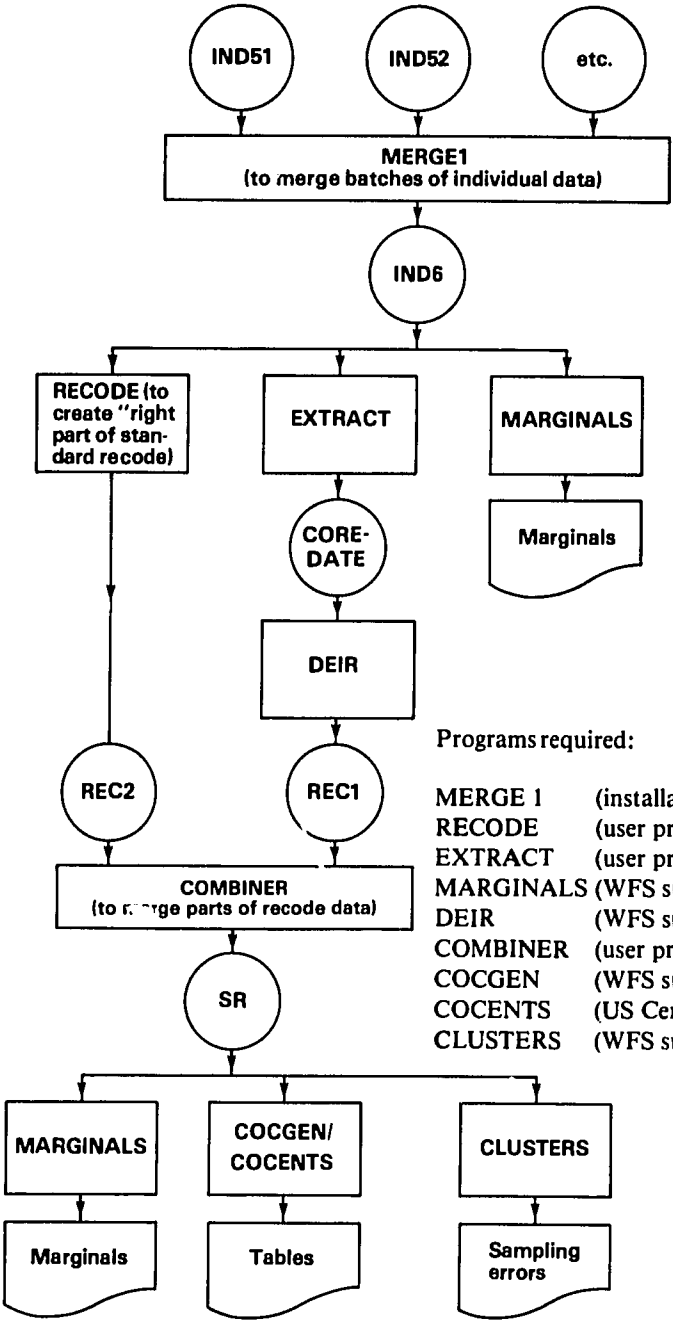

Programs required:

MERGE 1	(installation utility)
RECODE	(user program)
EXTRACT	(user program)
MARGINALS	(WFS supplied)
DEIR	(WFS supplied)
COMBINER	(user program)
COCGEN	(WFS supplied)
COCENTS	(US Census Bureau program)
CLUSTERS	(WFS supplied)

Programming and Data Processing Estimates

BLANK PAGE

Systems Analysis and Programming Estimates

1. *Preliminary design and documentation* (1st March - 31st May)[1]

	Person weeks
Finalize questionnaire	1
Card layout and keypunching instructions	1
Codebook	2
Flowchart of DP tasks	1
Error correction procedure and instructions	1
Check format/structure edit specifications	½
Check questionnaire tree	½
Test data	2
Installation of CONCOR and training	3
Installation of WFS programs (STRUCT, UPDATE, SUPDATE, MARGINALS)	2
CONCOR dictionary	2
	16

2. *Machine editing* (1st May - 31st August)

Program to check format (FORMAT)	2
Structure edit programs (STRUCT2, STRUCT3)	3
Listing program (LIST)	1
Range check program (RANGE; using CONCOR)	2
Consistency check program (CONS; using CONCOR)	6
HH range/consistency check (HHCONS; using CONCOR)	2
Check date extract specifications	1
Install WFS date edit program — DEIR	1
Date extraction program EXTRACT	4
	22

3. Recoding (1st September - 31st October)

Check recode specifications	½
Recode program (RECODE)	6
Merge program (MERGE 2)	½
	7

4. *Tabulation* (1st January - 31st March 1975)

Installation of COCGEN, COCENTS and training	3
Check table specifications	1
Modification of standard COCGEN library and dummy table production	8
Sampling error control cards	2
	14

5. *Archiving* (1st June - 31st July 1975)

Check and update all documentation	4
Machine readable codebooks	4
	8

Computer Time (based on IBM 370/145)-March 1974-May 1975

Phase	*CPU hours*
1. Preliminary design	15
2. Machine editing	60
3. Recoding	20
4. Tabulation	30
5. Archiving	—
	125

[1] Assuming pretest is carried out February 1974.

Data Processing Execution Estimates

1. *Keypunching* (1st July - 30th September 1974)

	Number Quest.	Cards per Quest.	Number cards	Columns per card	Number characters
Household	6,000	1	6,000	28	168,000
Household members	24,000	1	24,000	26	624,000
Individual	6,000	10	60,000	70	4,200,000
					4,992.000

Given average of 5,000 keystrokes per hour
30 hours per week

Person weeks for keypunching and verifying

$$\frac{2 \times 4{,}992{,}000}{5{,}000 \times 30} = 67$$

For punching to be completed in 3 months, 6 operators are required.

2. *Machine editing* (1st August 1974 - 28th February 1975)

Person power: for 30 week period

	Person weeks
Coders (for corrections)	60
Keypunch operators (for corrections)	60
Programmer (for supervising flow)	15
Demographer (for supervising corrections)	10

Computer CPU hours = 150

3. *Recoding* (1st March - 30th April 1975)

	Person weeks
Programmer for supervising flow	2
Demographer for checking	2

Computer CPU hours = 20

4. *Tabulations and sampling errors* (1st May - 31st August 1975)

	Person weeks
Programmer	8
Demographer	8

Computer CPU hours = 50

5. *Archiving* (1st August - 31st August 1975)

	Person weeks
Programmer	2

Computer CPU hours = 10

Total computer time (based on IBM 370/145) August 1974-August 1975

Phase	*CPU Hours*
Machine editing	150
Recoding	20
Tabulations	50
Archiving	10
	230

Bar Chart for Programming and Data Processing

BLANK PAGE

Bar Chart for Programming and Data Processing

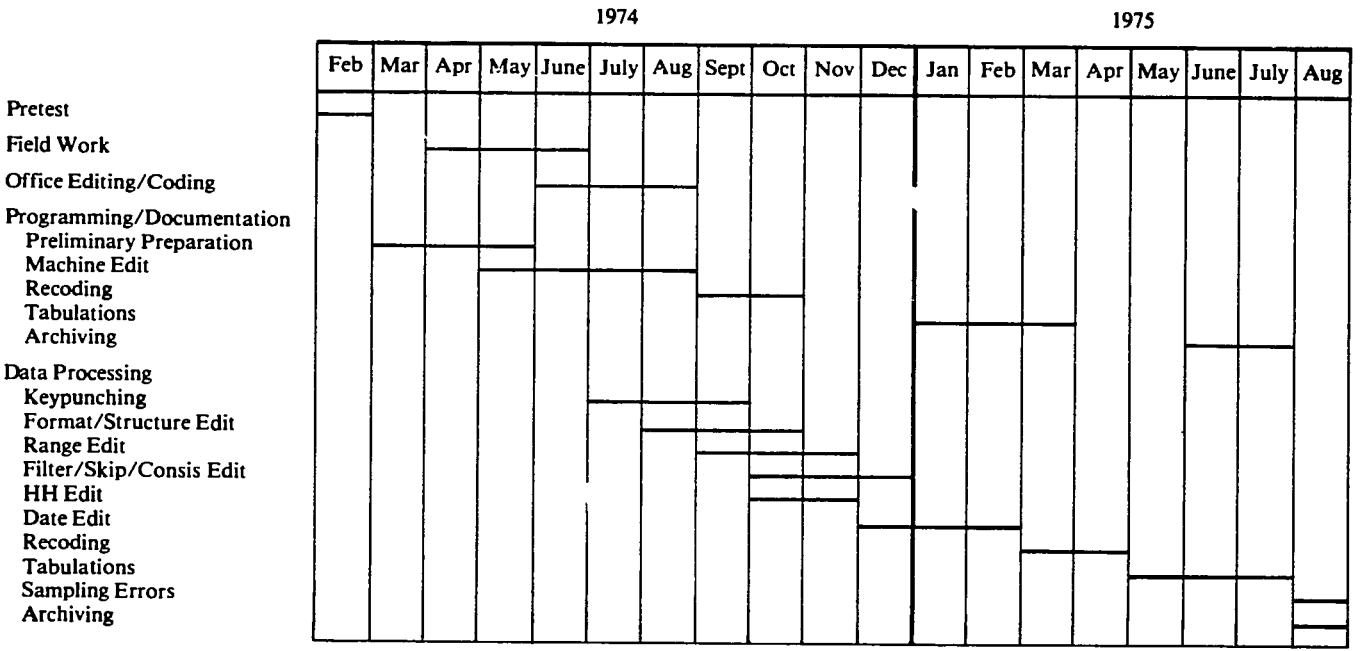

BLANK PAGE

DP Control Document

BLANK PAGE

DP Control Document — Machine Edit Batch 1

	1st Run	2nd Run	3rd Run	4th Run	Completion
COPY date Tape Number N	14/8/74 *T1 88, 325				14/8/74 *T1
LIST date	15/8/74				
FORMAT date	15/8/74	21/8/74			21/8/74
SUPDATE date Tape Number N	21/8/74 T2 88,372				T2 88,372
SORT date	28/8/74				
SEPARATE date Individual Tape Number N Household Tape Number N	28/8/74 T3 58,272 T7 30,102				
STRUCT1 date	28/8/74	16/9/74	2/10/74	26/10/74	26/10/74
UPDATE IND date Tape Number N	16/9/74 T4 58,240	1/10/74 T5 58,254	26/10/74 T4 58,262		*T4 58,262
STRUCT2 date	28/8/74	19/9/74	26/10/74		26/10/74
UPDATE HH date Tape Number N	19/9/74 T8 30,102	4/10/74 T9 30,084			*T9 30,084
STRUCT3 date	6/10/74	26/10/74			26/10/74
MARGINALS date	27/10/74				27/10/74
RANGE date	3/11/74	17/11/74	25/11/74		25/11/74
UPDATE date Tape Number N	17/11/74 T5 58,262	3/1/75 T6 58,262			T6 58,262
CONSISTENCY date	25/11/74	17/12/74	3/1/75	15/1/75	15/1/75
UPDATE date Tape Number N	16/2/75 T5 58,262	3/1/75 T6 58,262	15/1/75 T5 58,262		T5 58,262
HH CONSISTENCY date	21/1/75	16/2/75			16/2/75
UPDATE date Tape Number N	16/2/75 T10 30,084				*T10 30,084
EXTRACT date	16/1/75	30/1/75	14/2/75		14/2/75
DEIR date	16/1/75	30/1/75	15/2/75		
UPDATE date Tape Number N	30/1/75 T3 58,262	14/2/75 T7			*T7 58,262
MARGINALS	15/2/75				15/2/75

*Tapes to be retained

DP Control Document — Machine Edit

Batch _____

	1st Run	2nd Run	3rd Run	4th Run	Completion
COPY date Tape Number N					
LIST date					
FORMAT date					
SUPDATE date Tape Number N					
SORT date					
SEPARATE date SEPARATE date Individual Tape Number N Household Tape Number N					
STRUCT1 date					
UPDATE IND date Tape Number N					
STRUCT2 date					
UPDATE HH date Tape Number N					
STRUCT3 date					
MARGINALS date					
RANGE date					
UPDATE date Tape Number N					
CONSISTENCY date					
UPDATE date Tape Number N					
HH CONSISTENCY date					
UPDATE date Tape Number N					
EXTRACT date					
DEIR date					
UPDATE date Tape Number N					
MARGINALS					

*Tapes to be retained

Appendix II

DP Manual for Processing Data from the WFS Core Questionnaire

3. Data Processing Specifications

Keypunching Specifications (Card Layout)
Format Check Specifications
Structure Check Specifications
Individual Questionnaire Network Diagram
Range, Skip, Filter, Basic Date, and Miscellaneous Consistency Checks for Individual Data
Skip, Range, and Consistency Checks for Household Member Data
Date Extraction Specifications (for Date Editing)
Recode Specifications (Individual)
Specification of Tables for Country Report Number 1
Specifications for Sampling Errors

BLANK PAGE

Keypunching Specifications (Card Layout)

BLANK PAGE

Data Coding Form

CARD TYPE 11	CARD TYPE 10
	CLUSTER
	HH Number
	Line Number
Generation	Interview Day
Couple Number	
Mother's Line	Interview Month
Usual Resident	Interview Year
Slept last night	
Sex	Interviewer Code
Age	Result 1st visit
Attend school	Result 2nd visit
Highest level	Result 3rd visit
Highest grade	Result 4th visit
Ever married	Total visits
Marital status	Final result
	Number of persons
	Eligible women
Eligible woman	
Result of interview	

Data Coding Form

Card Type 41	Card Type 31	Card Type 21
		CLUSTER
		HH Number
		Line Number
Month of birth Q217	Live in house Q101	Interview day
Year of birth Q217	Live in area Q102	Interview month
Sex Q218	Place of residence Q103	Interview year
Child alive Q219	Always lived here Q104	Interviewer code
Age of child at death Q220	Type of area Q105	Interview duration
2nd birth	Month of birth Q107	
	Year of birth Q107	
	Age in years Q108	Result of 1st visit
		Result of 2nd visit
	Ever attended school Q109	Result of 3rd visit
	Highest level educ. Q110	Number of visits
	Highest grade educ. Q111	Final result
3rd birth	Can read Q113	
	Country specific variables e.g. religion, ethnic group	
4th birth		
	Any births Q201	
	Any short lived births Q202	
	Ever pregnant Q203	
	Ever pregnant (probed) Q204	
	Any sons living with Q205	
5th birth	No. of sons living with Q206	
	Any sons away Q207	
	No. of sons away Q208	
	Any daughters with Q209	
	No. of daughters with Q210	
6th birth	Any daughters away Q211	
	No. of daughters away Q212	
	Any children died Q213	
	No. of children dead Q214	
	Total children born Q215	
7th birth		
8th birth		

Data Coding Form

CARD TYPE 71

Current marital status Q401
Married more than once Q402
Month of marriage Q403
Year of marriage Q403
Husband live in house Q404
Husband away perman Q405
Month of separation Q406
Year of separation Q406
Married more than once Q407
No. of marriages Q408
Month of marriage (1st) Q409
Year of marriage Q410
Marriage end Q411
Month marriage ended Q412
Year marriage ended Q412
Month of marriage (2nd)
Month of marriage (3rd)
Month of marriage (4th)
Presence of others

CARD TYPE 61

Know FP method Q301
No. of methods known Q302
Know pill Q303
Used pill
Know iud Q305
Used iud
Know female sci. Q306
Used female sci.
Know douche Q307
Used douche
Know condom Q308
Used condom
Know rhythm Q309
Used rhythm
Know withdrawal Q310
Used withdrawal
Know abstention Q311
Used abstention
Know female sterilizh. Q312
Know male sterilisation Q313
Know other method Q314
Other method
Used other method
Used any FP Q315
Used any FP (probe)
FP method used (probed) Q317

CARD TYPE 51

Breastfed last child Q221
Months last child breastfed Q222
More than 1 birth Q223
Breastfed penultimate child Q224
Months breastfed penult. child Q225
Currently pregnant Q226
Month baby due Q227
Year baby due Q227
Sex preference Q228
No pregnancies Q229
Any other pregnancies Q230
No. other pregnancies Q231
Month ended (1st) Q233
Year ended Q233
Length Q235
Baby had life Q236
Sex Q237
2nd other birth
3rd other birth
4th other birth
5th other birth
6th other birth
7th other birth
Reliability Q238
Presence of others Q239

Data Coding Form

CARD TYPE 91		CARD TYPE 81	
Currently working	Q601	Currently married	Q501
Worked since 1st marriage	Q602	Currently pregnant	Q502
Year last worked	Q603	Used FP	Q503
Occupation	Q604	Currently using FP	Q504
		Current FP method	Q505
		Live birth	Q506
Farming	Q605	Used FP since last child	Q507
Family Farm	Q606	Last FP method used	Q508
Work at home	Q607		
Employer	Q608	Sterile	Q509
Payment	Q609	Sterilized	Q510
Years worked since 1st marriage	Q610	Sterilized for FP	Q511
		Husband sterilized	Q512
No live birth	Q611	Live birth	Q513
Work in 1st birth int.	Q612	Desire for children	Q514
Work before marriage	Q613	Sex preference for children	Q515
Years worked before marriage	Q614	Children desired	Q516
Occupation (bm)	Q615	More children sometime	Q517
		Sex preference next child	Q518
		Additional children desired	Q519
Employer (bm)	Q616		
Payment (bm)	Q617	More children (preg)	Q520
Husband attend school	Q703	Additional children desired (preg)	Q521
Husband highest ed. level	Q704		
Husband highest grade	Q705	Used FP	Q522
Husband can read	Q707	Will use FP	
Husband childhood residence		Currently pregnant (ncm)	Q524
Husband occupation	Q709	Sterilized (ncm)	Q525
		Sterilized for FP (ncm)	Q526
		Used FP (ncm)	Q527
Husband employer	Q710	Live birth (ncm)	Q528
Husband payment method	Q711	Used FP since last child (ncm)	Q529
Husband has employees	Q712	Last method used (ncm)	Q530
No of husband employees	Q713		
		Children desired (ncm)	Q531
Degree of cooperation			

Format Specifications

BLANK PAGE

Format Check Specifications

Fields being referenced:

Card type	columns 1-2
Cluster	3-5
Household	6-8
Line number	9-10

Checks to be made

1. All columns on each card are numeric or blank.
2. Card type takes one of the values listed below and all columns beyond the "last column used" are blank:

Card type	*Last column used*
10	27
11	48
21	26
31	58
41	74
42	74
43	74
51	79
61	50
71	62
81	48
91	48

3. Cluster is in the range 001-056
4. Household is in the range 001-025
5. Line number is in the range 00-36

Sort Specifications

1st sort field	columns 3-10
2nd sort field	columns 1-2

Separation Specifications

Household File — all cards where column 1 = 1

Individual file — all cards where column 1 $\neq$ 1

BLANK PAGE

Structure Check Specifications

BLANK PAGE

Structure Check Specifications

1. *Individual File*

Fields being referenced:

card type	columns 1-2
Respondent Identification	3-10

For each new respondent, the following cards, and only those, should be present

Card type	*Condition for presence*
21	Mandatory
31	Mandatory
41	Optional —
42	Optional — if present 41 must be present
43	Optional — if present 42 must be present
51	Mandatory
61	Mandatory
71	Mandatory
81	Mandatory
91	Mandatory

Cases with incomplete sets of cards are written to a separate file if the interview is indicated as incomplete i.e. card 21 column 26 = 1.

2. *Household File*

Fields being referenced:

card type	cols 1-2
Household identification	3-8
line number	9-10

From card type 10

Number of members	25-26
Number of eligible members	27

From card type 11

Live here	11
Sex	17
Age	18-19
Ever-married	23
Eligibility	47

Checks for each new household:

(a) There is a card 10

(b) There are n cards 11 where n = number of members

(c) If card type 10 then line number = 00
If card type 11 then line number = 1 + line number of last card.

(d) Eligibility = 1 if and only if

	Live here	= 1
and	sex	= 2
and	age	= 15-49
and	ever-married	= 1

(e) Number of cards 11 with eligibility = 1 equals number of eligible members.

(f) Cluster totals of:

- Number of households
- Number of households successfully interviewed.
- Number of eligible women.
- Number of eligible women successfully interviewed

agree with the field work totals.

3. *Matching household and individual data*

Fields being referenced:

card type	column 1-2
Member identification	3-10
Eligibility (card type 11 only)	47

Check that:

For all household members with eligibility = 1 in card 11 there is a card 21 in the individual file and vice versa.

Individual Questionnaire Network Diagram

BLANK PAGE

Individual Questionnaire Network Diagram

Section 1.

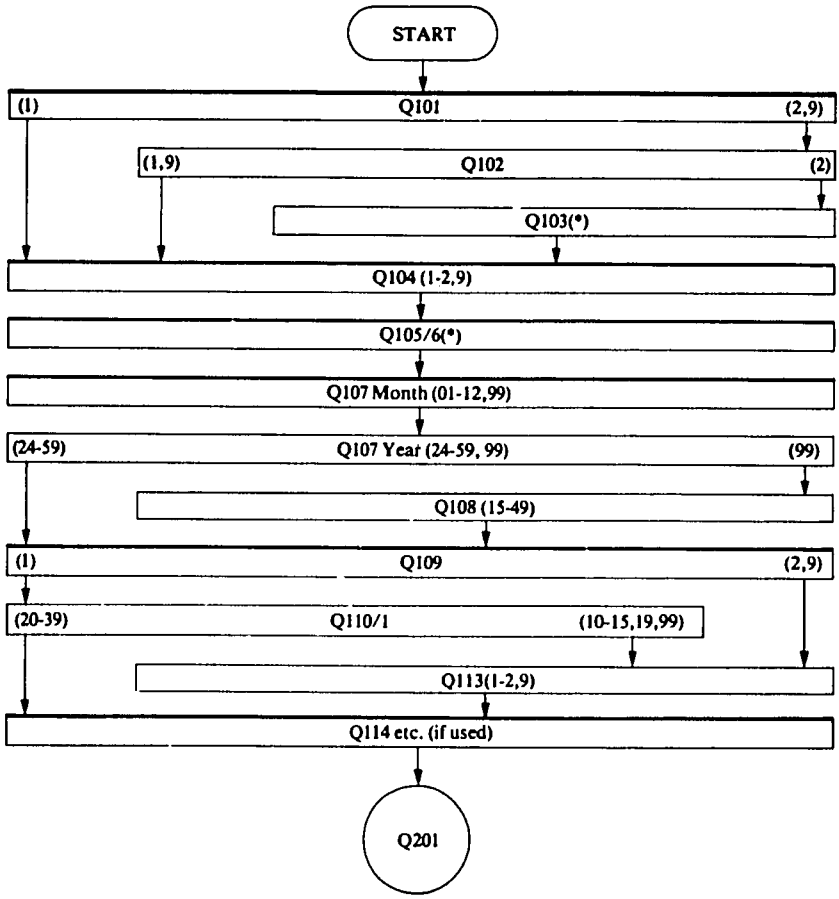

Section 2.

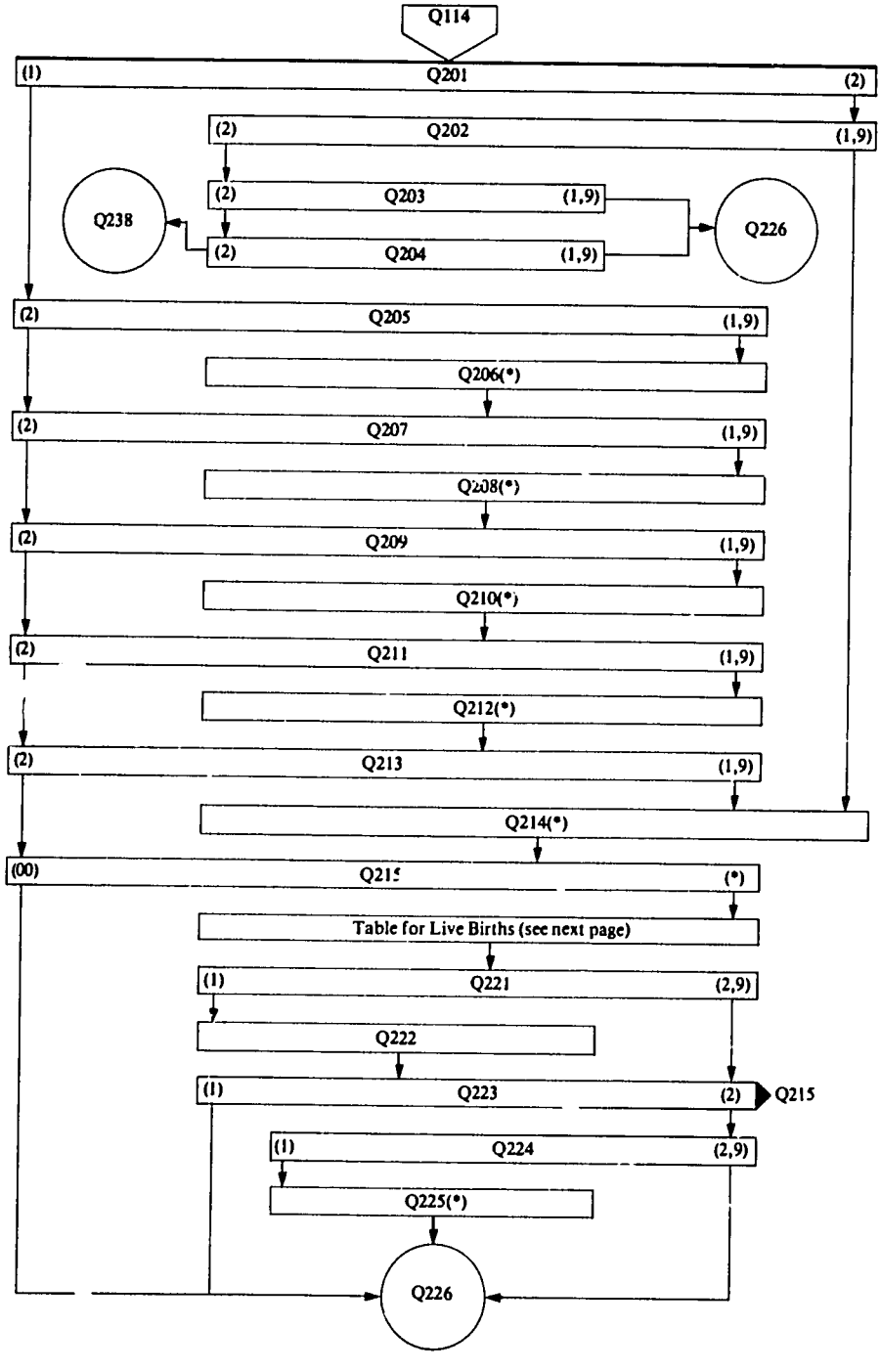
Q114
(1)
Q201
(2)
(2)
Q202
(1,9)
Q238
(2)
Q203
(1,9)
(2)
Q204
(1,9)
Q226
(2)
Q205
(1,9)
Q206(*)
(2)
Q207
(1,9)
Q208(*)
(2)
Q209
(1,9)
Q210(*)
(2)
Q211
(1,9)
Q212(*)
(2)
Q213
(1,9)
Q214(*)
(00)
Q215
(*)
Table for Live Births (see next page)
(1)
Q221
(2,9)
Q222
(1)
Q223
(2)
Q215
(1)
Q224
(2,9)
Q225(*)
Q226

Section 2 (continued)

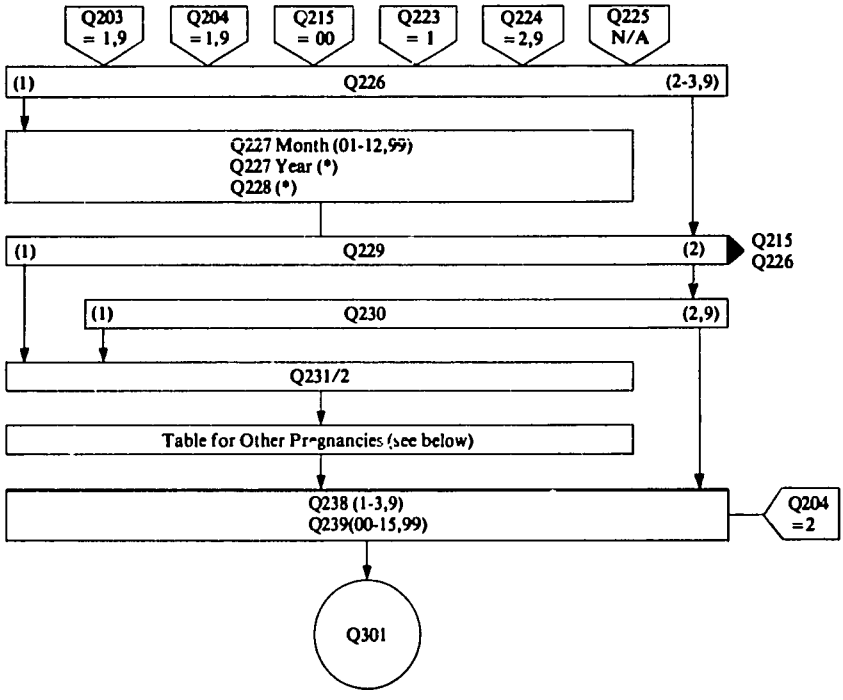

Live Birth Table

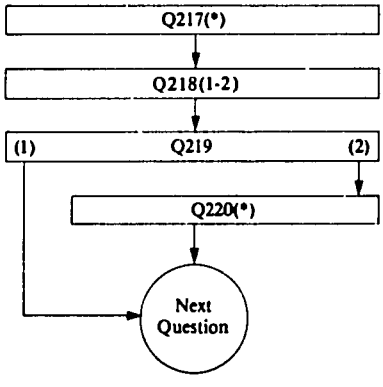

Other Pregnancy Table

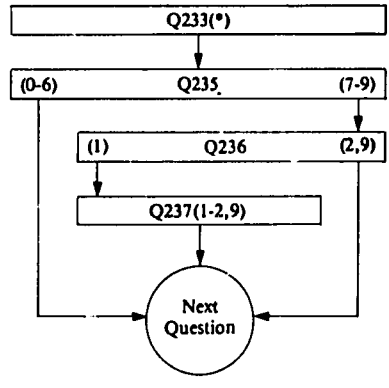

Section 3.

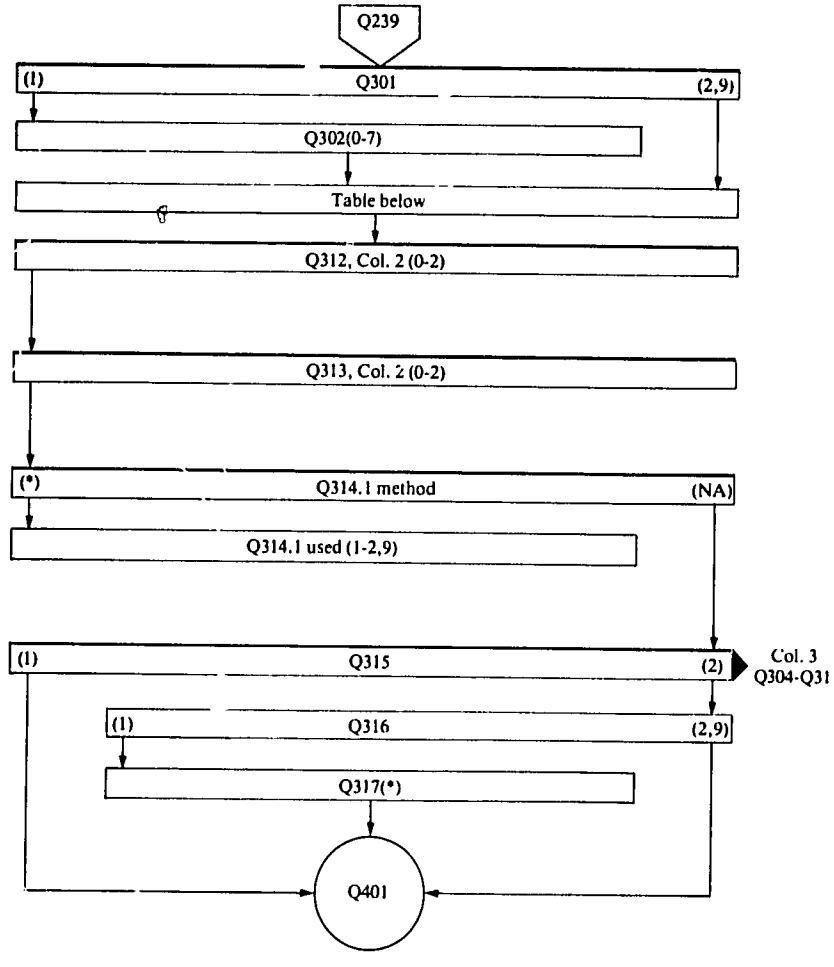
Q239
(1)
Q301
(2,9)
Q302(0-7)
Table below
Q312, Col. 2 (0-2)
Q313, Col. 2 (0-2)
(*)
Q314.1 method
(NA)
Q314.1 used (1-2,9)
(1)
Q315
(2)
Col. 3
Q304-Q311
(1)
Q316
(2,9)
Q317(*)
Q401

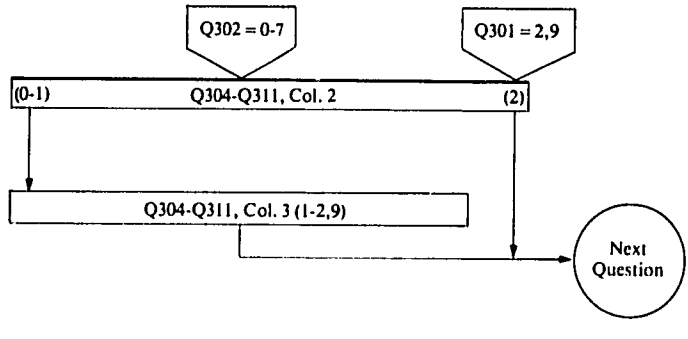
Q302 = 0-7
Q301 = 2,9
(0-1)
Q304-Q311, Col. 2
(2)
Q304-Q311, Col. 3 (1-2,9)
Next
Question

Section 4.

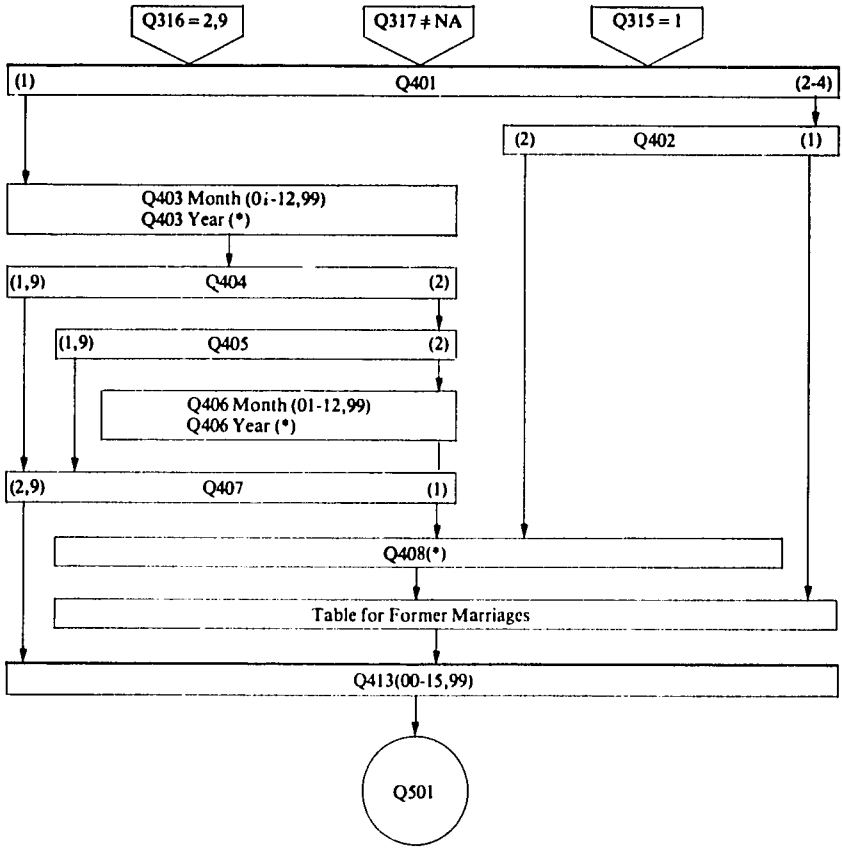

Former Marriages Table

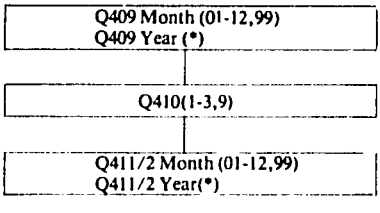

Number of former marriages		
	Q408 = NA	Q408 ≠ NA
Q401 = 1	0	Q408-1
Q401>1	1	Q408

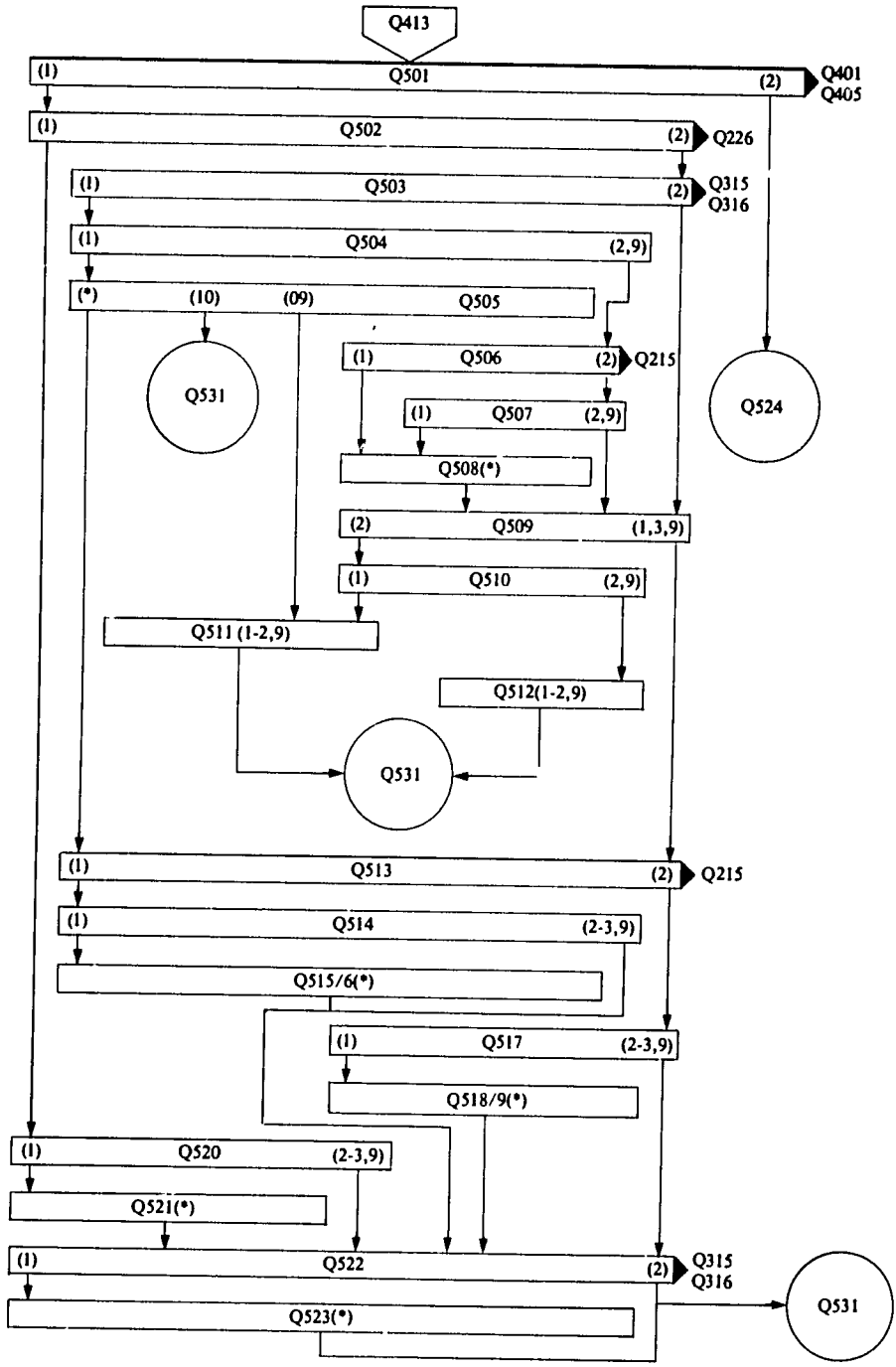
Q413
(1) Q501 (2) Q401 Q405
(1) Q502 (2) Q226
(1) Q503 (2) Q315 Q316
(1) Q504 (2,9)
(*) (10) (09) Q505
Q531
(1) Q506 (2) Q215
(1) Q507 (2,9)
Q524
Q508(*)
(2) Q509 (1,3,9)
(1) Q510 (2,9)
Q511 (1-2,9)
Q512(1-2,9)
Q531
(1) Q513 (2) Q215
(1) Q514 (2-3,9)
Q515/6(*)
(1) Q517 (2-3,9)
Q518/9(*)
(1) Q520 (2-3,9)
Q521(*)
(1) Q522 (2) Q315 Q316
Q523(*)
Q531

Section 5 (continued)

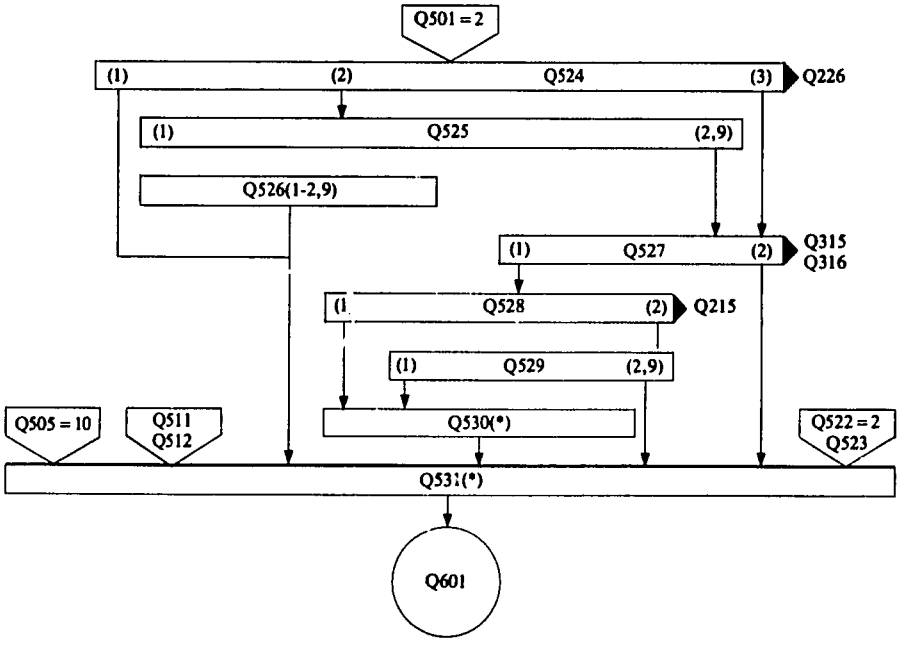

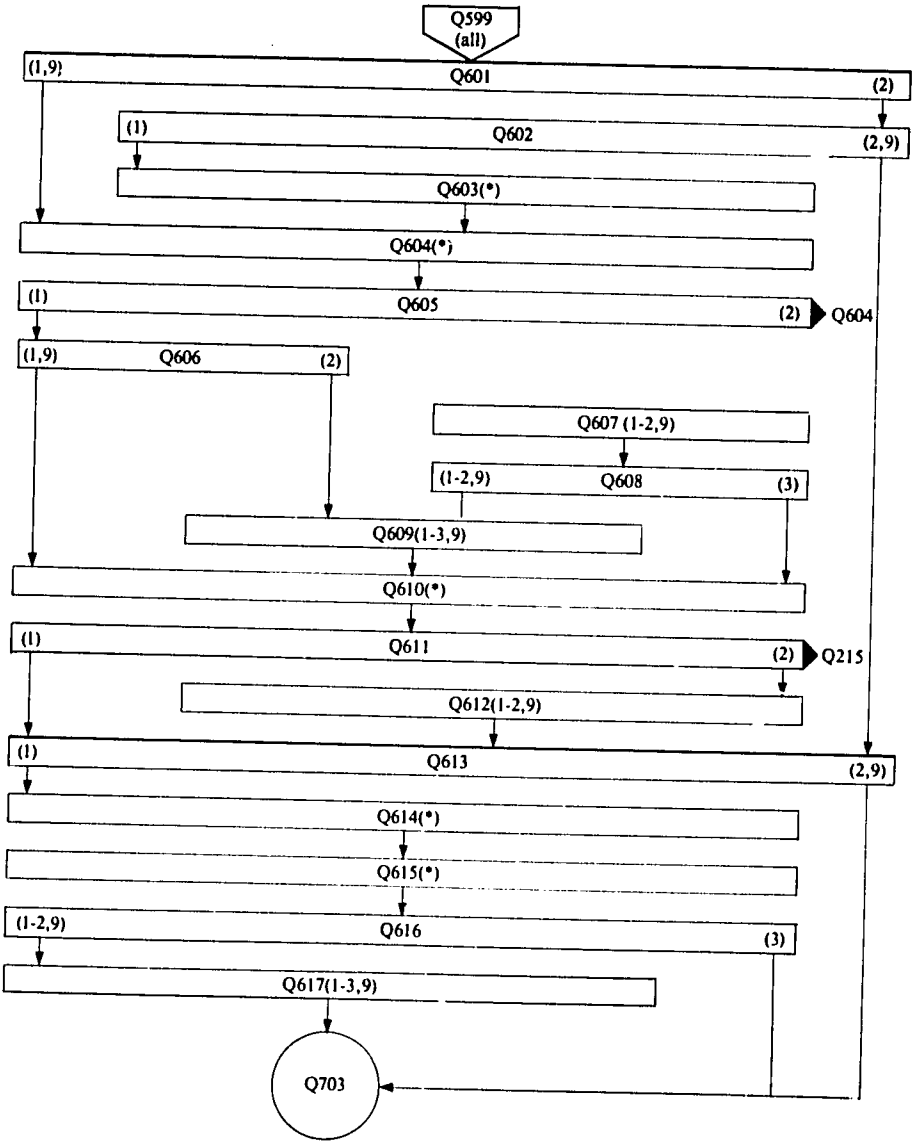
Q599
(all)
(1,9)
Q601
(2)
(1)
Q602
(2,9)
Q603(*)
Q604(*)
(1)
Q605
(2)
Q604
(1,9)
Q606
(2)
Q607 (1-2,9)
(1-2,9)
Q608
(3)
Q609(1-3,9)
Q610(*)
(1)
Q611
(2)
Q215
Q612(1-2,9)
(1)
Q613
(2,9)
Q614(*)
Q615(*)
(1-2,9)
Q616
(3)
Q617(1-3,9)
Q703

Section 7.

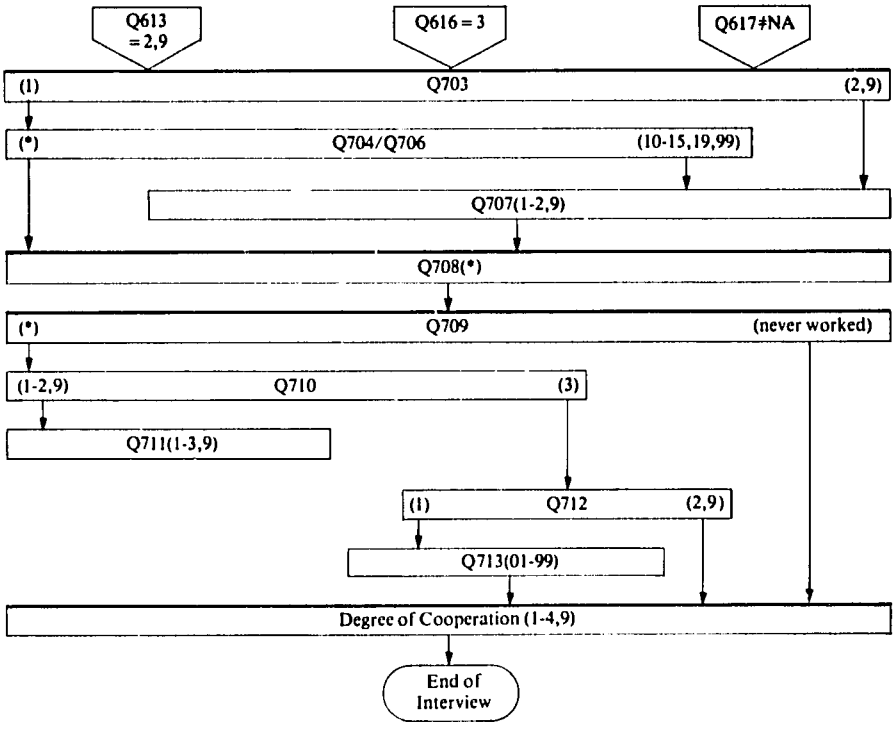
Q613 = 2,9
Q616 = 3
Q617≠NA
(1)
Q703
(2,9)
(*)
Q704/Q706
(10-15,19,99)
Q707(1-2,9)
Q708(*)
(*)
Q709
(never worked)
(1-2,9)
Q710
(3)
Q711(1-3,9)
(1)
Q712
(2,9)
Q713(01-99)
Degree of Cooperation (1-4,9)
End of Interview

Fertility Regulation Module

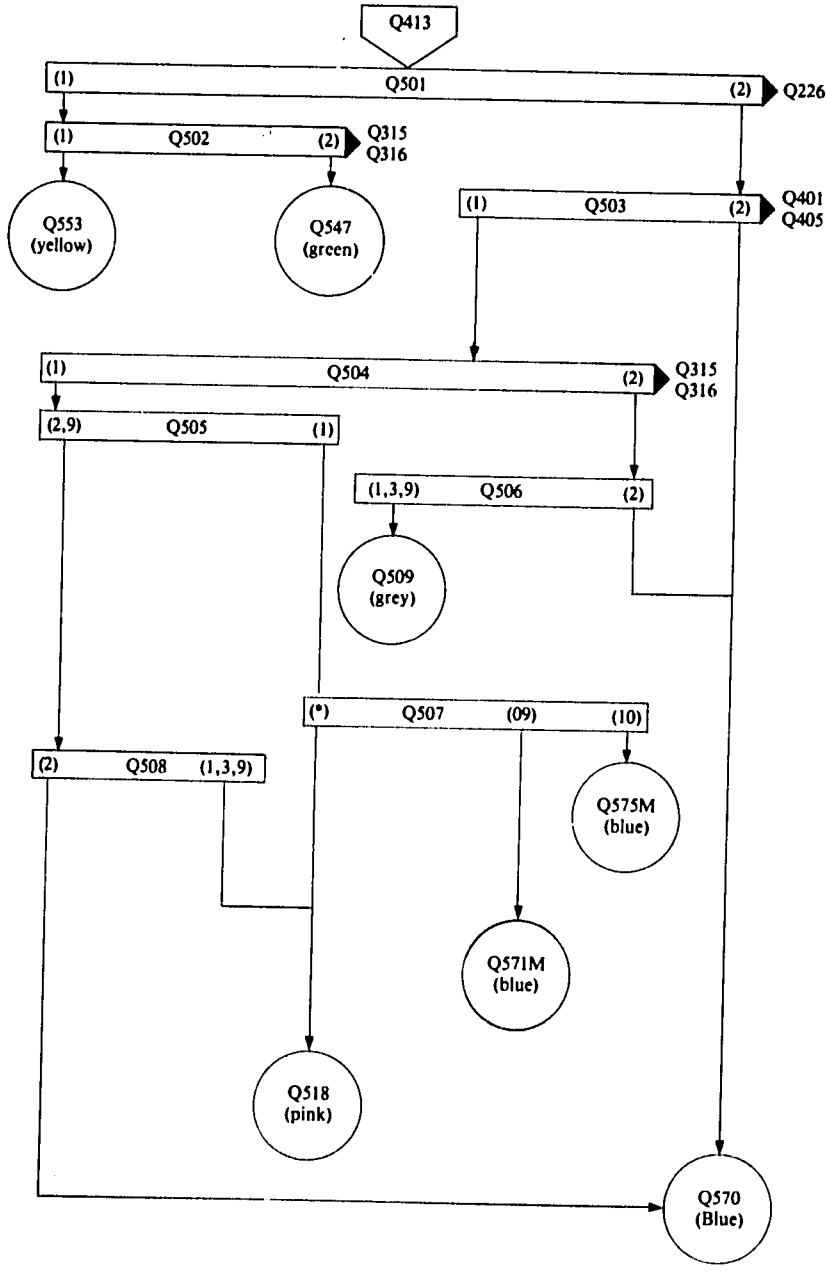

Fertility Regulation Module — Grey Page

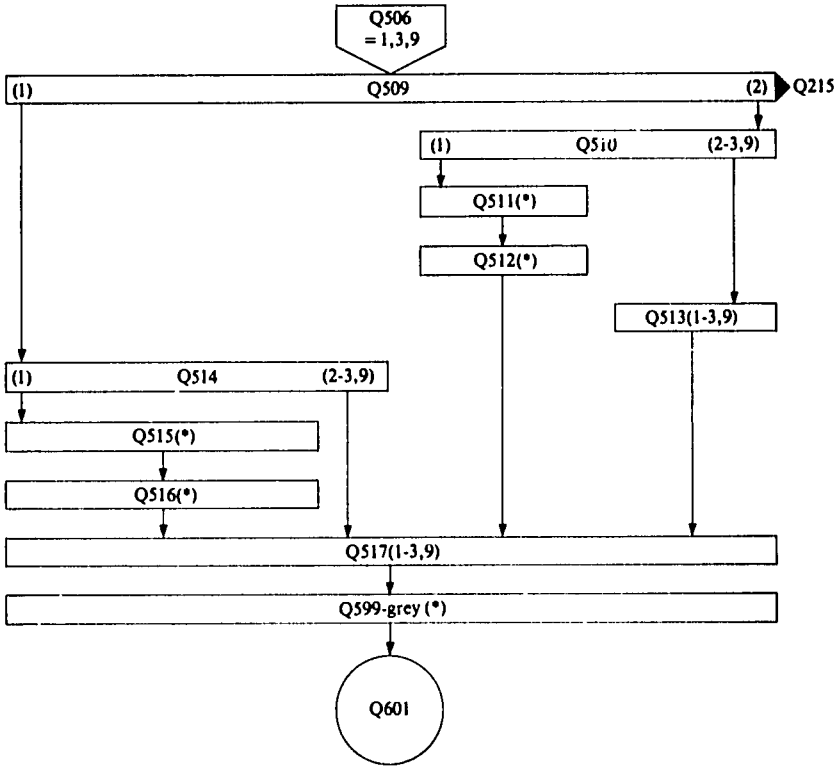

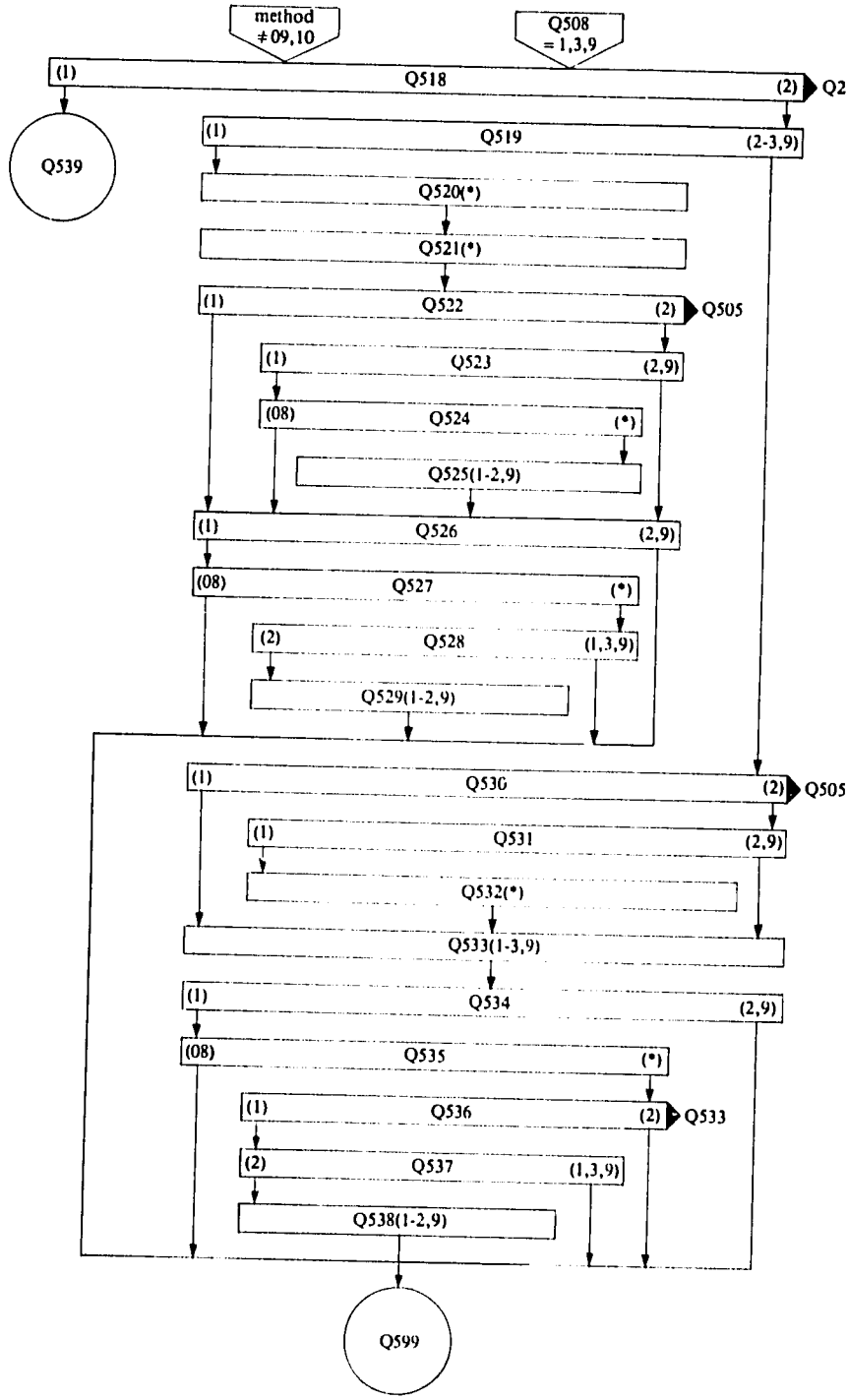
method
≠09,10
Q508
=1,3,9
(1)
Q518
(2)
Q215
Q539
(1)
Q519
(2-3,9)
Q520(*)
Q521(*)
(1)
Q522
(2)
Q505
(1)
Q523
(2,9)
(08)
Q524
(*)
Q525(1-2,9)
(1)
Q526
(2,9)
(08)
Q527
(*)
(2)
Q528
(1,3,9)
Q529(1-2,9)
(1)
Q530
(2)
Q505
(1)
Q531
(2,9)
Q532(*)
Q533(1-3,9)
(1)
Q534
(2,9)
(08)
Q535
(*)
(1)
Q536
(2)
Q533
(2)
Q537
(1,3,9)
Q538(1-2,9)
Q599

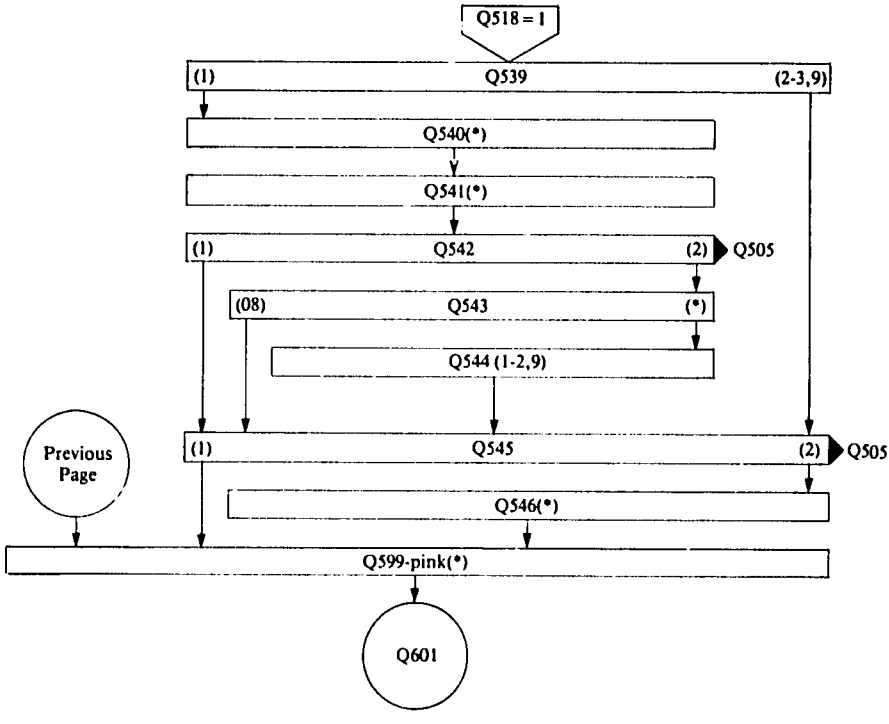
Q518 = 1
(1)
Q539
(2-3,9)
Q540(*)
Q541(*)
(1)
Q542
(2)
Q505
(08)
Q543
(*)
Q544 (1-2,9)
Previous Page
(1)
Q545
(2)
Q505
Q546(*)
Q599-pink(*)
Q601

Fertility Regulation Module — Green Page

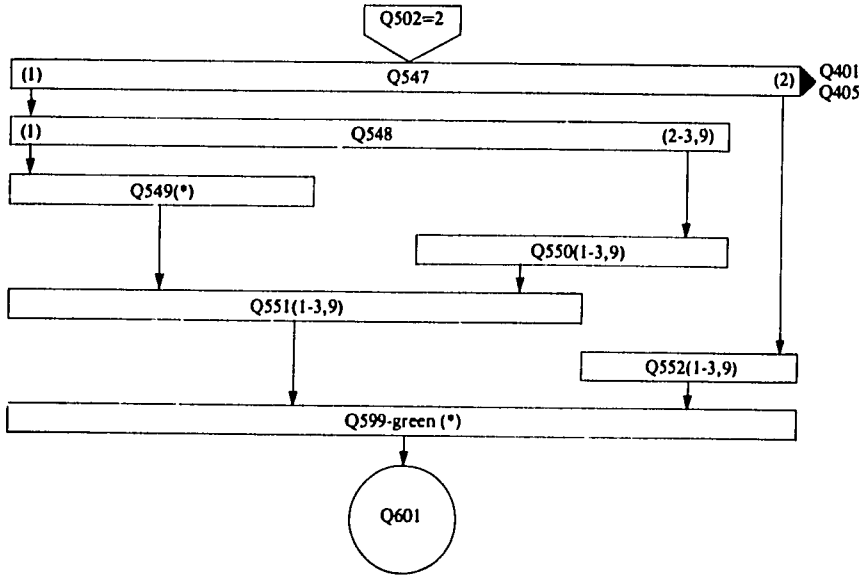

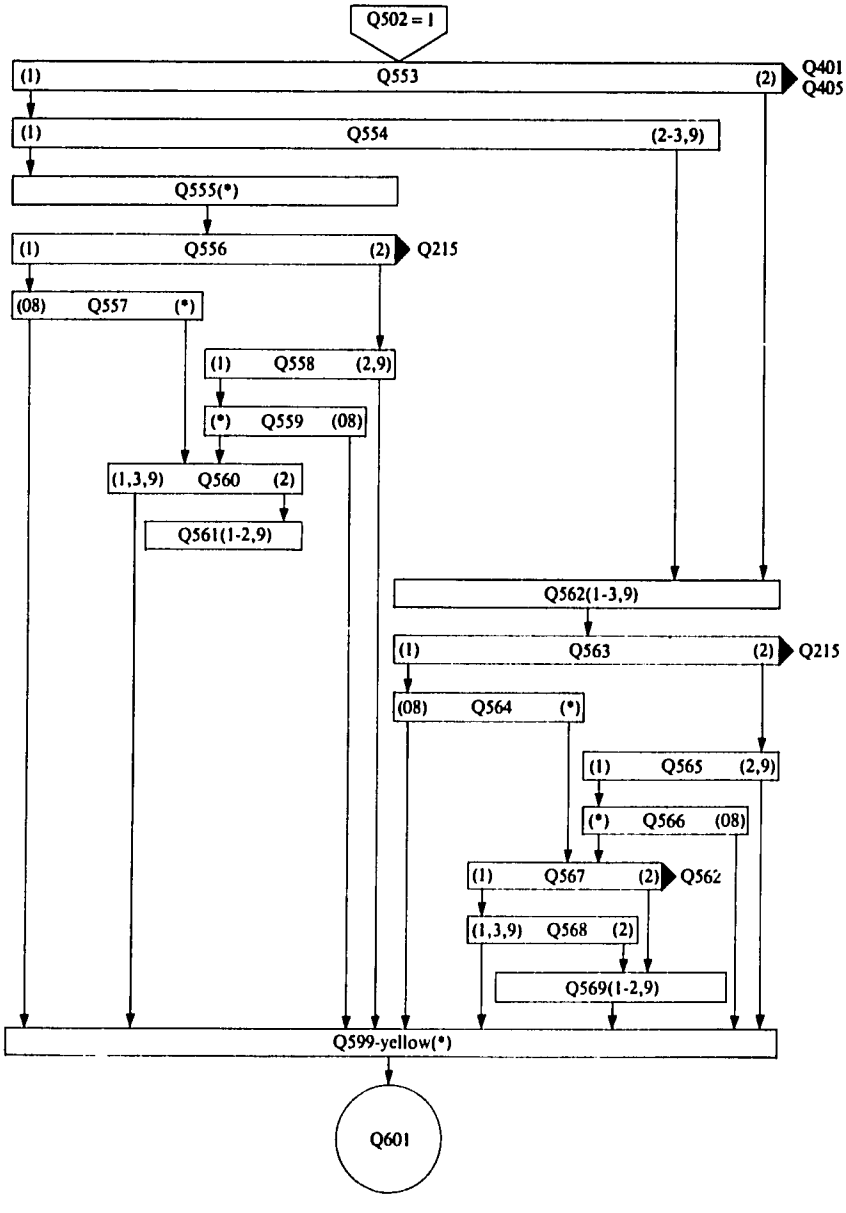
Q502 = 1
(1) Q553 (2)
Q401
Q405
(1) Q554 (2-3,9)
Q555(*)
(1) Q556 (2)
Q215
(08) Q557 (*)
(1) Q558 (2,9)
(*) Q559 (08)
(1,3,9) Q560 (2)
Q561(1-2,9)
Q562(1-3,9)
(1) Q563 (2)
Q215
(08) Q564 (*)
(1) Q565 (2,9)
(*) Q566 (08)
(1) Q567 (2)
Q562
(1,3,9) Q568 (2)
Q569(1-2,9)
Q599-yellow(*)
Q601

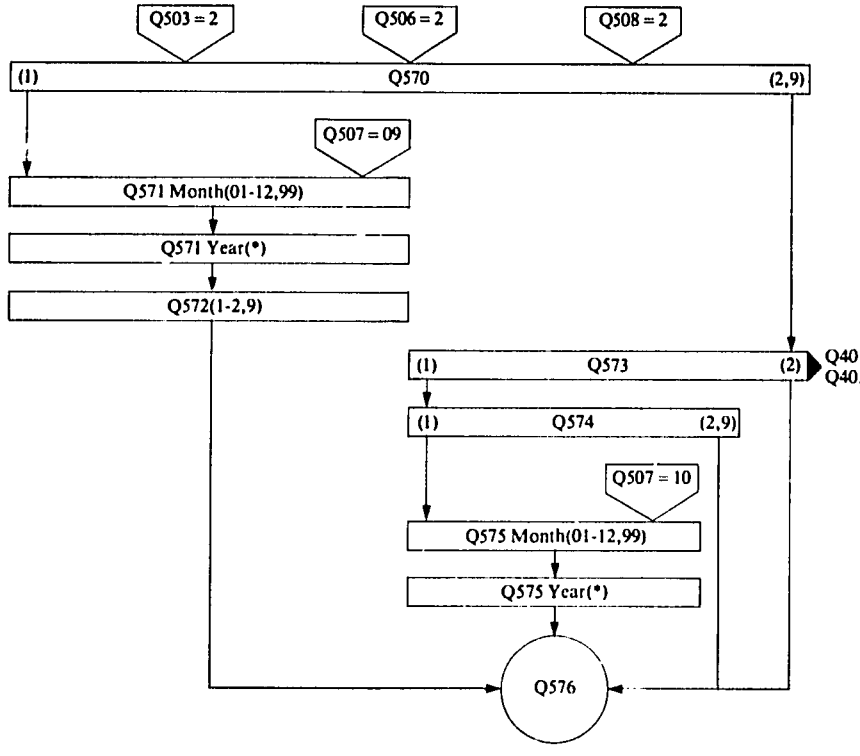
Q503 = 2
Q506 = 2
Q508 = 2
(1)
Q570
(2,9)
Q507 = 09
Q571 Month(01-12,99)
Q571 Year(*)
Q572(1-2,9)
(1)
Q573
(2)
Q401
Q405
(1)
Q574
(2,9)
Q507 = 10
Q575 Month(01-12,99)
Q575 Year(*)
Q576

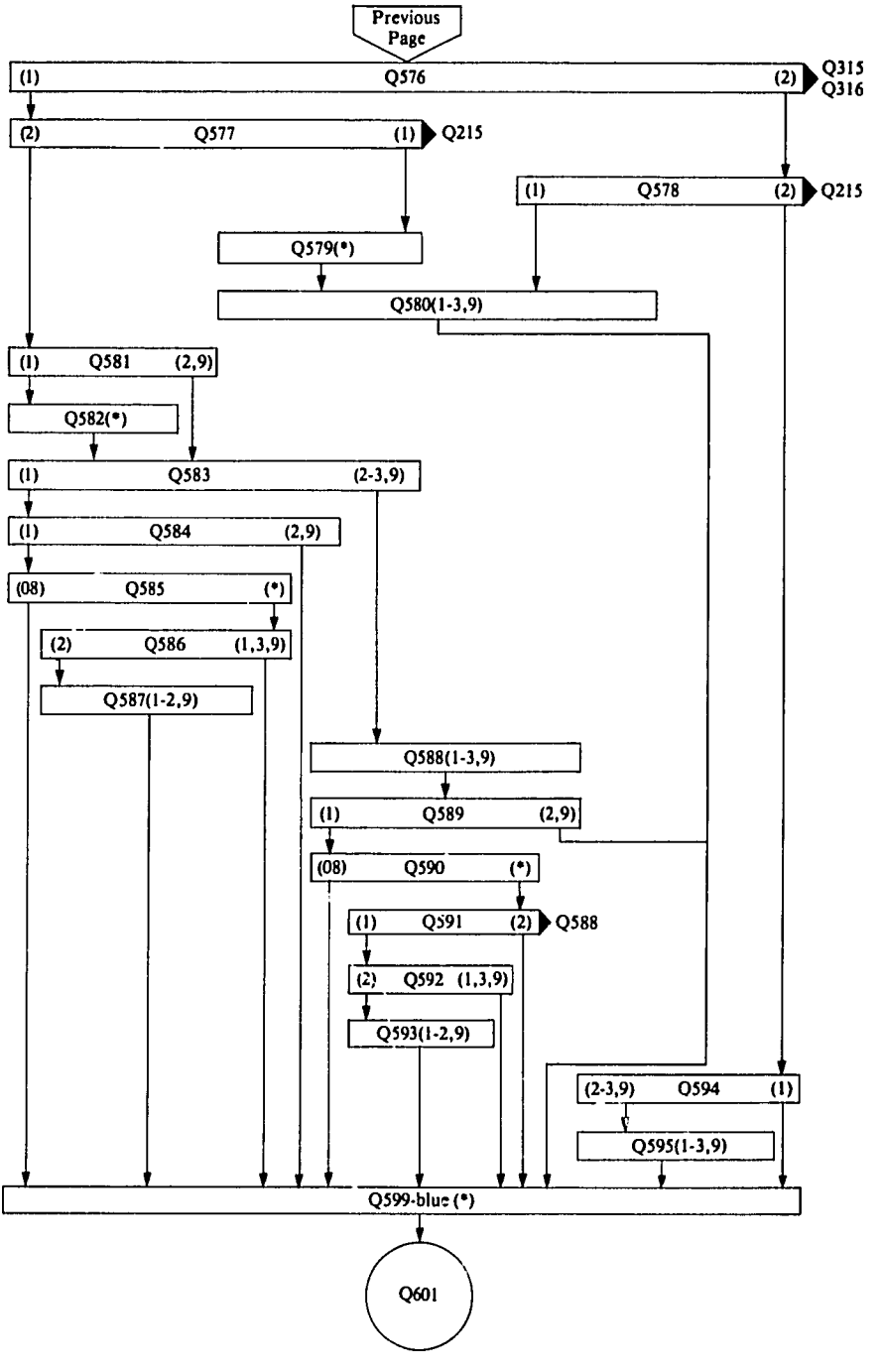
Previous Page
(1) Q576 (2)
Q315
Q316
(2) Q577 (1)
Q215
(1) Q578 (2)
Q215
Q579(*)
Q580(1-3,9)
(1) Q581 (2,9)
Q582(*)
(1) Q583 (2-3,9)
(1) Q584 (2,9)
(08) Q585 (*)
(2) Q586 (1,3,9)
Q587(1-2,9)
Q588(1-3,9)
(1) Q589 (2,9)
(08) Q590 (*)
(1) Q591 (2)
Q588
(2) Q592 (1,3,9)
Q593(1-2,9)
(2-3,9) Q594 (1)
Q595(1-3,9)
Q599-blue (*)
Q601

BLANK PAGE

Range, Skip, Filter, Basic Date, and Miscellaneous Consistency Checks for Individual Data

BLANK PAGE

Range Check Specifications (Individual)

The specifications for range checks, i.e. of the valid codes for each question, can be taken from the codebook or from the questionnaire network diagram:

e.g.
Q101 = 1, 2, 9
Q102 = blank, 1, 2, 9
Q103 = blank, 001 - 526
Q104 = 1-2, 9

Skip Check Specifications (Individual)

These are to check that non-blank responses are only given for applicable questions.

The checks are derived directly from the questionnaire network diagram. They are all in the form of "if and only if" conditions.

e.g. for the beginning of the questionnaire:

If Q101 = 2,9	THEN Q102 ≠ NA
If Q102 ≠ NA	THEN Q101 = 2,9
If Q102 = 2	THEN Q103 ≠ NA
If Q103 ≠ NA	THEN Q102 = 2
If Q107 = 99	THEN Q108 ≠ NA
If Q108 ≠ NA	THEN Q107 = 99

If the CONCOR package is being used, and if all blanks (NA) responses are assumed recoded to 8888, then the DIFL statement can be used as follows:

DIFL	(Q101.EQ.2. OR.9)	THEN (Q102.NE.8888)
DIFL	(Q102.EQ.2)	THEN (Q103.NE.8888)
DIFL	(Q107.EQ.99)	THEN (Q108.NE.8888)

Filter Check Specifications (Individual)

Core Questionnaire

If Q223 = 1	THEN Q215 = 1
If Q223 = 2	THEN Q215 ≥ 2
If Q229 = 1	THEN Q215 = 0 and (Q226 = 2,3,9)
If Q229 = 2	THEN Q215 > 0 or Q226 = 1
If Q315 = 1	THEN (Q304 or Q305 or ... Q312 or Q314(use)) = 1
If Q315 = 2	THEN (Q304 and Q305 and ... Q312 and Q314 (use)) = 2,8,9
If Q501 = 1	THEN Q401 = 1 and (Q405 = 1,9,NA)
If Q501 = 2	THEN Q401 ≠ 1 or Q405 = 2

Core Questionnaire (continued)

If Q502 = 1	THEN Q226 = 1
If Q502 = 2	THEN Q226 = 2,3,9

If Q503 = 1	THEN Q315 = 1 or Q316 = 1
If Q503 = 2	THEN Q315 = 2 and (Q316 = 2,9)

The same checks apply to Q522 and Q527

If Q506 = 1	THEN Q215 = 0
If Q506 = 2	THEN Q215 > 0

The same checks apply to Q513, Q528 and Q611

If Q524 = 1	THEN Q226 = 1
If Q524 = 2	THEN Q226 = 2, 9
If Q524 = 3	THEN Q226 = 3

If Q605 = 1	THEN Q604 = any of the codes for farming occupations;
If Q605 = 2	THEN Q604 = none of the codes for farming occupations.

Fertility Regulation Module

Q501	: As Q502 for the core (see above)
Q502, Q504, Q576	: As Q503 for the core (see above)
Q503, Q547, Q553, Q573	: As Q501 for the core (see above)
Q509, Q518, Q556, Q563, Q577, Q578	: As Q506 for the core (see above)

If Q522 = 1	THEN Q505 = 1
If Q522 = 2	THEN Q505 = 2,9

The same checks apply to Q530, Q542 and Q545.

If Q536 = 1	THEN Q533 = 1
If Q536 = 2	THEN Q533 = 2,3,9

If Q567 = 1	THEN Q562 = 1
If Q567 = 2	THEN Q562 = 2,3,9

If Q591 = 1	THEN Q588 = 1
If Q591 = 2	THEN Q588 = 2,3,9

If card 8 col 18 = 1 (grey)	Q506 = 1,2,9
If card 8 col 18 = 2 (pink)	(Q507 = non-sterilization method) or (Q508 = 1,3,9)
If card 8 col 18 = 3(green)	Q502 = 2
If card 8 col 18 = 4 (yellow)	Q502 = 1
If card 8 col 18 = 5(blue)	(Q503 = 2) or (Q507 = male or female sterilization) or (Q506 or Q508 = 2).

Basic Date Checks and Birth and Marriage Table Checks (Individual)

1. *Validity of dates*

Convert interview date, respondent's birth date, all marriage start and end dates, child birth dates to the century month code (12* year + month).

Let	INT	= Interview date
	RBIRTH	= Respondent's birth date
	CBIRTH	= ith child's birth date
	SMARR (j)	= jth marriage start date
	EMARR (j)	= jth marriage end date

check:

(SMARR(1)—RBIRTH)/12>12
CBIRTH(i + 1) — CBIRTH(i) > 7
EMARR(i) — SMARR(i) > 0
SMARR (i + 1)—EMARR(i)>0
14<(INT—RBIRTH)/12)<50

2. *Coding without gaps*

Births:	If Q217(i) = NA then Q218(i) to Q220(24) = NA
Pregnancies:	If Q233(i) = NA then Q235(i) to Q238(7) = NA
Marriages:	If Q409(i) = NA then Q410(i) to Q411(4) = NA

3. *Expected number of events*

Births:	number of lines used = Q215
Pregnancies:	number of lines used = 0 if Q230 = 2
	number of lines used = Q232 if Q230 = 1
Marriages:	number of lines used = 0 if Q407 = 2
	number of lines used = 1 if Q402 = 1
	number of lines used = (Q408 — 1) if Q407 = 1
	number of lines used = Q408 if Q402 = 2

4. *Birth history totals*

Sum of all non-NS and non-NA entries in Q206, Q208, Q210, Q214, Q216 = Q215

Number of births with:

Q218 = 1 (boy) and Q219 = 1 (alive) = Q206 + Q208
Q218 = 2 (girl) and Q219 = 1 (alive) = Q210 + Q212
Q219 = 2 (dead) = Q214

MISCELLANEOUS CONSISTENCY CHECKS (INDIVIDUAL)

Contraceptive knowledge and use

1. Number of methods known
   If Q302<7 Number of Q304K—Q314K equal to 0,1 = Q302
   If Q302 = 7 Number of Q304K—Q314K equal to 0,1>Q302
   If Q302 = NA Number of Q304K—Q314K equal to 0,1 = 0

2. For Q304—Q311, Q314 'use' = NA if and only if 'knowledge' = 2,9
   e.g. Q304U = NA if and only if Q304K = 2,9

3. Open interval method used:
   Any method used in Section 5 of the questionnaire must be recorded as "ever used" in Section 3. The check is made as follows:

- Determine the method used in the open interval by taking any non-blank value from Q505, Q508, Q530.
- If there is a non-blank value then Q317 ≠ NA and either the appropriate method from Q304U—Q311U = 1 or Q314U = 1

Presence of husband

If Q239 = 2, 3, 6, 7, 10, 11, 14, 15 then Q401 = 1
If Q413 = 2, 3, 6, 7, 10, 11, 14, 15 then Q401 = 1

Range, Skip, and Consistency Checks for Household Member Data

BLANK PAGE

Skip and Range Checks for Household Member Data

Question	*Column*	*Range*	*Question ≠ NA if and only if*	
Card type	1-2	11		
Identification	3-10			
Generation (2a)	11	(1-7),9		
Couple (2b)	12	(1-7),9,NA	ever-married = 1	
Mother's line (2c)	13-14	(01-49),NA		
Res. — de jure (3)	15	(1-2),9		
Res. — de facto (4)	16	(1-2),9		
Sex (5)	17	(1-2),9		
Age (6)	18-19	(00-95),99		
Schooling (7)	20	(1-2),9,NA	age≥starting age for school	
Educ. — level (8)	21	(1-4),9,NA	schooling = 1	
Educ. — grade (8)	22	(1-7),9,NA	schooling = 1	
Ever married (9)	23	(1-2),9,NA	age≥minimum child-bearing age	
Marital status (10)	24	(1-4),9,NA	ever married = 1	
Sons in household (11)	25-26	(01-21),99, NA	sex = 2 and age≥minimum child-bearing age	
Daughters in household (12)	27-28	(00-21),99, NA	sex = 2 and age≥minimum child-bearing age	Not
Sons not in household (13)	29-30	(01-21),99, NA	sex = 2 and age≥minimum child-bearing age	used in
Daughters not in household (14)	31-32	(00-21),99, NA	sex = 2 and age≥minimum child-bearing age	core
Sons dead (15)	33-34	(00-21),99, NA	sex = 2 and age≥minimum child-bearing age	questionnaire
Daughters dead(16)	35-36	(00-21),99, NA	sex = 2 and age≥minimum child-bearing age	example
Total (17)	37-38	(00-21),99, NA	sex = 2 and age≥minimum child-bearing age	in this DP
Month — last (18)	39-40	(01-12),99,NA	total ≠ NA or 0	
Year — last (19)	41-42	*,99,NA	total ≠ NA or 0	Manual
Sex — last (20)	43	(1-2),9,NA	total ≠ NA or 0	
Alive — last (21)	44	(1-2),9,NA	total ≠ NA or 0	
Respondent (22)	45-46	*,99,NA	sex = 2 and age≥minimum child-bearing age	
Eligibility (23)	47	(1-2),NA	sex = 2 and age = 15-49 and res. de facto = 1 and ever married = 1	
Outcome	48	(1-5),9,NA	eligibility = 1	

Consistency Checks for Household Member Data

1. Residency (column 15-16)

   It should never be the case that a person neither lives in the household nor slept there last night, i.e.,:
   If de jure = 2,9 de facto = 1;
   If de facto = 2,9 de jure = 1.

2. Couple code (column 12)

   If the couple code has a value of 1-6, it should appear for two persons in the household (and two persons only):
   - of opposite sex,
   - of same generation,
   - who are married, and
   - with different mothers (except when mother's line = 88)

   If the couple code has a value of 7 or 9, it can appear for one or more persons in the household, all of whom should be ever-married.

   If a person is widowed, divorced, or separated, the couple code should be 7.

3. Mother's line number (column 13-14)

   - if code $\neq$ 88 or $\neq$ 99, then the value should be < number of persons in the household (column 25-26 of card type 10).
   - On the line number referenced a person of following characteristics should be coded:
     sex = female (2);
     generation = (generation of child) — 1 (when generation = 1-5); age $\geqslant$ (age of child) + (minimum childbearing age).

4. Education (column 20-22)

   Completed years of schooling + 5 $\leqslant$ age.

5. Fertility (column 25-38) [not used in the examples in this manual]

   The sum of all sons and daughters should equal the total in column 37-38.

   Number of sons living in the household = number of household members with sex = male and the same mother's line number as the respondent.

   Number of daughters is tested in a similar way.

6. Last live birth (column 39-44) [not used in the examples in this manual]

Date of last live birth ⩽ date of interview;
Minimum childbearing age ⩽ age — (year of interview — year-last) ⩽ 45

The following conditions should hold:

Sex = and Alive =	1 1	1 2	2 1	2 2
	Sons in HH + sons not in HH > 0	Sons dead > 0	Daughters in HH + not in HH > 0	Daughters dead > 0

7. Line number of respondent to fertility questions (column 45-46) [Not used in the examples in this manual]
The value entered should be ⩽ number of persons in the household.
The age of the person specified on that line number should be ⩾ 10.

BLANK PAGE

Date Extraction Specifications (for Date Editing)

BLANK PAGE

1. Auxiliary variables (Locations 1-55)

Variable, Location	Description and Code	Source or Recoding Rules
E-IDEN (1-16)	*Questionnaire Identification*	1-8 = All zeroes 9-16 = Input record : 3-10 (Cluster: 3-5; Household: 6-8; Line No: 9-10)
E-DAIM (17-18)	*Month of Interview* 01-12 = month	INTMON (Record 21: 13-14)
E-DAIY (19-20)	*Year of Interview* 74-80 = year	INTYR (Record 21: 15-16)
E-DOBM (21-22)	*Month of Respondent's Birth* 01-12 = month 99 = NS	Q107M (Record 31: 18-19)
E-DOBY (23-24)	*Year of Respondent's Birth* 25-55 = year 99 = not stated	Q107Y (Record 31: 20-21)
E-RAGE (25-26)	*Age of Respondent* 15-49 = age 88 = NA 99 = NS	Q 108 (Record 31: 22-23)
E-PREG (27)	*Currently Pregnant?* 1 = yes 2 = no 3 = don't know	Q226 (Record 51; 18)
E-MPRG (28-29)	*Expected Delivery Month* 01-12 = month 88 = NA (not preg.)	If E-PREG = 1 Then Q227M (Record 51: 19-20) Else 88
E-YPRG (30-31)	*Expected Delivery Year* 74-81 = year 88 = NA (not preg.)	If E-PREG = 1 Then Q227Y (Record 51: 21-22) Else 88
E-MOST (32-33)	*Month of Sterilisation* 01-12 = month 88 = NA (not sterilized) 99 = don't know	Not available (88)
E-YEST (34-35)	*Year of Sterilisation* 25-80 = year 88 = NA (not ster.) 99 = NS	Not available (88)
E-MAST (36-37)	*Months Ago of Sterilization* 00-11 = months ago 88 = NA (not sterilized or data not present) 99 = NS	Not available (88)
E-YAST (38-39)	*Years Ago of Sterilisation* 00-49 = years ago 88 = NA (not sterilized or data not present) 99 = NS	Not available (88)
E-AGST (40-41)	*Age at Sterilisation* 00-49 = age 88 = NA (not sterilized or data not present) 99 = NS	Not available (88)

1. Auxiliary variables (Locations 1-55 continued)

Variable, Location	Description and Codes	Source or Recoding Rules
E-LAST (42-43)	*Months Breastfed Last Child* 00-76 = months 88 = NA (no live births) 96 = still breastfeeding 97 = until child died 98 = did not breastfeed 99 = NS	If Q221 (Record 51: 11) = 1 Then Q222 (Record 51: 12-13) Else if Q 221 = 2 Then 98 Else 88
E-NEXT (44-45)	*Months Breastfed Next to Last Child* 00-76 = months 88 = NA (one or fewer live births) 97 = until child died 98 = did not breastfeed 99 = not stated	If Q224 (Record 51: 15) = 1 Then Q225 (Record 51: 16-17) Else if Q224 = 2 Then 98 Else 88
E-STIB (46-47)	*Number of Still Births* 00-24 = number	Count of entries in Birth History with E-STAT = 3
E-SPON (48-49)	*Number of Spontaneous Abortions* 00-24 = number	Count of entries in Birth History with E-STAT = 4
E-INDU (50-51)	*Number of Induced Abortions* 00-24 = number 88 = NA (data not available)	Not available (88)
E-BTOT (52-53)	*Number of Entries in the Birth History Table* 00-36 = number	Count of entries in Birth History (should = Q215 + Q232)
E-MTOT	*Number of Entries in the Marriage History Table* 00-10 = number	Q401 = 1 Currently married: Q407 = 1 → Q408; Q407 ≠ 1 → 1 Q401 ≠ 1 Not currently married: Q402 = 1 → 1; Q402 ≠ 1 → Q408

2. Birth history variables (Locations 56-919)

The birth history consists of 36 entries of 24 characters each, with the format described below. The number of entries processed is determined by the value of E-BTOT in the auxiliary section. The locations indicated are relative locations within one entry.

Variable, Relative Location	Description and Codes	Source or Recoding Rules	
		Live Birth	Other Pregnancy
E-DABM (1-2)	*Month of Birth* 01-12 = month 33 = second or subsequent child of multiple birth 88 = NA (no entry or data not present) 99 = NS (month not known)	Q217M(I) ≠ 22 Then Q217M(I) Else 88	Q233M(I) ≠ 22 Then Q233M(I) Else 88
E-DABY (3-4)	Year of Birth 37-80 = year 33 = second or subsequent child of a multiple birth 88 = NA (no entry or data not present) 99 = NA	Q217M(I) ≠ 22 Then Q217Y(I) Else 88	Q233M(I) ≠ 22 Then Q233Y Else 88
E-MABY (5-6)	*Months Ago of Birth* 00-11 = months ago 88 = NA (no entry or data not present) 99 = NS	Not available (88)	Not available (88)
E-YABY (7-8)	*Years Ago of Birth* 00-49 = years ago 88 = NA (no entry or data not present) 99 = NS	Q217M(I) = 22 Then Q217Y(I) Else 88	Q233M(I) = 22 Then Q233Y(I) Else 88
E-AGBY (9-10)	*Age of Mother at Birth* 12-49 = age 88 = NA (no entry or data not present) 99 = NS	Not available (88)	Not available (88)
E-AGCH *(11-12)*	*Age of Child at Interview* 00-37 = age 88 = NA (no entry or data not present) 99 = NS	Not available (88)	Not available (88)
E-MOIN (13-14)	*Interval From Previous Birth — Months* 00-11 = months 77 = years of interval are age of previous child 88 = NA (no entry or data not present) 99 = NS	Not available (88)	Not available (88)
E-YEIN (15-16)	*Interval From Previous Birth — Years* 00-49 = years 88 = NA (no entry or data not present) 99 = NS	Not available (88)	Not available (88)

2. Birth history variables (Locations 56-919 continued)

Variable, Relative Location	Description and Codes	Source or Recoding Rules: Live Birth	Source or Recoding Rules: Other Pregnancy
E-SEX (17)	*Sex of Child* 1 = male 2 = female 8 = NA (no entry or non-live birth)	Q218(I)	Q237(I) = 1 or 2 Then Q237(I) Else 8
E-STAT (18)	*Status of Birth* 1 = live birth, still alive 2 = live birth, now dead 3 = still birth 4 = spontaneous abortion 5 = induced abortion 8 = NA (no entry)	Q219(I)	Q235(I) = 7-9 Then 3 Else 4
E-DIGM (19-20)	*Age of Child at Death — Months* 00-11 = months 88 = NA (no entry, child alive or non-live birth) 99 = NS	If Q219 ≠ 2 Then 88 Else Recode Q220(I): 1 → 00, 2 → 01, 3 → 03, 4 → 06, 5 → 00, 6 → 00, 7 → 00, 8 → 00, 9 → 99	Not applicable (88)
E-DIGY (21-22)	*Age of Child at Death — Years* 00-37 = age 88 = NA (no entry, child alive or non-live birth) 99 = NS	If Q219 (I) ≠ 2 Then 88 Else Recode Q220(I): 1 → 00, 2 → 00, 3 → 00, 4 → 00, 5 → 01, 6 → 02, 7 → 05, 8 → 10, 9 → 99	Not applicable (88)
E-DURP (23-24)	*Duration of Pregnancy for Non-Live Births* 00-09 = months 88 = NA (no entry or live birth) 99 = NS	Not applicable (88)	Q235(I)

3. Marriage history variables (Locations 920-1219)

The marriage history consists of 10 entries of 30 characters each, with the format described below. The number of entries processed is determined by the value of E-MTOT in the auxiliary section. The locations indicated are relative locations within one entry.

Variable Relative Location	Description and Codes	Source or Recoding Rules	
		Former Marriage	Current Marriage
E-MOBM (1-2)	*Month of Beginning of Marriage* 01-12 = month 88 = NA (no marriage or data not present) 99 = NS	Q409M(I) = 01-12, 99 Then Q409M(I) Else 88	Q403M ≠ 22 Then Q403M Else 88
E-YEBM (3-4)	*Year of Beginning of Marriage* 37-80 = year 88 = NA (no marriage or data not present) 99 = NS	Q409M(I) = 01-12, 99 Then Q409Y(I) Else 88	Q403M ≠ 22 Then Q403Y Else 88
E-MABM (5-6)	*Months Ago of Beginning of Marriage* 00-11 = months 88 = NA (no marriage or data not present) 99 = NS	Not available (88)	Not available (88)
E-YABM (7-8)	*Years Ago of Beginning of Marriage* 00-49 = years ago 88 = NA (no marriage or data not present) 99 = NS	Q409M(1) = 22 Then Q409Y(1) Else 88	Q403M = 22 Then Q403Y Else 88
E-AGBM (9-10)	*Age of Respondent at Beginning of Marriage* 12-49 = age 88 = NA (no marriage or data not present) 99 = NS	Not available (88)	Not available (88)
E-IMBM (11-12)	*Interval Since End of Previous Marriage — Months* 00-11 = months 88 = NA (no marriage or data not present) 99 = NS	Not available (88)	Not available (88)
E-IYBM (13-14)	*Interval Since End of Previous Marriage — Years* 00-49 = years 88 = NA (no marriage or data not present) 99 = NS	Not available (88)	Not available (88)
E-ENDM (15)	*Status of Marriage* 1 = married 2 = widowed 3 = divorced 4 = separated 5 = other 8 = NA (no marriage entry) 9 = NS	Q410(I) = 1, 2, 3 Then Q410(I) + 1 Else 9	Q405 = 2 Then 4 Else 1

3. Marriage history variables (Locations 920-1219 continued)

Variable Relative Location	Description and Codes	Source or Recoding Rules	
		Former Marriage	Current Marriage
E-TYUN (16)	*Type of Union* Codes are country specific	= 1 for marriage	= 1 for marriage
E-MOEM (17-18)	*Month of End of Marriage* 01-12 = month 88 = NA (marriage not ended or data not present) 99 = NS	Q411M(I) = 01-12, 99 Then Q411M(I) Else 88	Q405 = 2 Then Q406M Else 88
E-YEEM (19-20)	*Year of End of Marriage* 37-80 = year 88 = NA (marriage not ended or data not present) 99 = NS	Q411M = 01-12, 99 Then Q411Y (I) Else 88	Q405 = 2 Then Q406Y Else 88
E-MAEM (21-22)	*Months Ago of End of Marriage* 00-11 = months 88 = NA (marriage not ended or data not present) 99 = NS	Not available (88)	Not available (88)
E-YAEM (23-24)	*Years Ago of End of Marriage* 00-49 = years ago 88 = NA (marriage not ended or data not present) 99 = NS	If Q411M (I) = 22 Then Q411 Y Else 88	Not available (88)
E-AGEM (25-26)	*Age of Respondent at End of Marriage* 12-49 = age 88 = NA (marriage not ended or data not present) 99 = NS	Not available (88)	Not available (88)
E-IMEM (27-28)	*Interval From Beginning of Marriage — Months* 00-11 = months 88 = NA (marriage not ended or data not present) 99 = NS	Not available (88)	Not available (88)
E-IYEM (29-30)	*Interval From Beginning of Marriage — Years* 00-49 = years 88 = NA (marriage not ended or data not present) 99 NS	Not available (88)	Not available (88)

Recode Specifications (Individual)

BLANK PAGE

Recode Specifications.

These specifications give detailed instructions for creating all variables needed to produce the tabulations for *WFS Country Report No. 1.* The resulting data file is known as the *Standard Recode file.*

Notes

(1) All values are right justified in their fields with leading zeros inserted if necessary.

(2) Fields of 8's mean "not applicable" throughout.

(3) Fields of 9's mean "not stated" throughout.

(4) Question numbers refer to the *WFS Core Questionnaire* plus *modifications.*

(5) Minimum and maximum codes are normally the logically possible codes for the *Core Questionnaire.* Where "*" is given, these values are dependent on the actual data. Where no values are shown at all, they would depend on the actual editing/coding instructions for the particular survey e.g. date of interview (V007).

(6) If the WFS program DEIR is used for data edit, imputation and recoding, variables V001 - V306 are generated by DEIR. The recoding program need then only generate V401 - V907.

PART 1 (V001 - V306)

Identification and Sample Structure (V001-V006)

V001 identifies the record. V002-V005 define the sample structure for the purpose of sampling error calculations.

Variable, Location	Description, Code	Source, Recode Instructions
V001 (1-16)	*Identification number* (usually a combination of place code, cluster number, household number and line number of woman)	This must be the same as appears on the original questionnaire (card 21, cols 3-10), coded *right justified,* with leading zeros.
V002 (17-18)	*Domain number* (the smallest geographic part of the sample for which independent estimates may be produced).	Use card 21 cols 3-5 as index into table*. Formed by grouping PSU's. Normally 4-10 categories.
V003 (19-22)	*Stratum number*	Use card 21, cols 3-5 as index into table*. Note that these are not necessarily the original explicit strata defined for sample selection. When PSU's are selected "systematically", V003 identifies the implicit strata formed by pairing (or other grouping) of PSU's for sampling error computations.
V004	*PSU number* (identifies Primary Sampling Unit or unit selected in first stage).	Use card 21, cols 3-5 as index into table*. Note that if any areas, e.g., towns, appear in the sample with certainty, PSU's refer to the first stage area units selected with less than certainty within the "self-representing" areas.
V005 (27-30)	*UAU number* (identifies Ultimate Area Unit or final cluster).	Use card 21, cols 3-5 as index into table*. For samples with a single area stage V005 is identical to V004. The UAU number should be unique i.e., in samples with two or more area stages UAU's should not be numbered within PSU's.
V006 (31-34)	*Sample weight*	Use card 21, cols 3-5 as index into table*. The weights are preferably "normalized", i.e., the average weight is unity. V006 is coded to 3 decimal places but omitting the decimal point itself. See Appendix V to WFS. *Guidelines for the Country Report No. 1.* For a self-weighting sample, code as 1000.

*V002-V006 are obtained from a table constructed by the person responsible for drawing the survey sample. This table consists of a list of all sample UAU's along with the range of identification numbers of women in each UAU. The UAU's are then grouped into PSU's, PSU's grouped into strata and strata into sample domains. Units in each column so formed are numbered sequentially starting with '1'.

e.g.

Cluster from ID (cards 21 cols 3-5)	UAU	PSU	STRATUM	DOMAIN	WEIGHT
001-002	1	1	1	1	1.3
003	2	2	1	1	1.3
004-007	3	3	2	1	1.3
⋮	⋮	⋮	⋮	⋮	⋮
341-344	92	92	46	6	1.7

Reference Dates and Age (V007-V012)

V007 and V008 are the basic reference dates. V009 to V012 are derived variables.

Variable, Location	Description, Code	Source, Recode Instructions
V007 (35-38)	*Date of interview* (century month code)	12* Year + Month (year = card 21, cols 15-16; month = card 21, cols 13-14)
V008 (39-42)	*Respondent's date of birth* (century month code)	12*Q107Y + Q107M
V009 (43-44)	*Year of birth of respondent*	(V008-1)/12† (integral values)
V010 (45-46)	*Current age* (15-49)	(V007-V008)/12 (integral values)
V011 (47-48)	*Age in 5 year groups* (1-7)	If V010 <20, 20-24, 25-29, 30-34, 35-39, 40-44, 45+ then 1, 2, 3, 4, 5, 6, 7
V012 (49-50)	*Age in 10 year groups* (1-4)	If V010 <25, 25-34, 35-44, 45+ then 1, 2, 3, 4

† This assumes that the century month code for January 1900 is 1. If some other datum is used in the construction of the code, an appropriate constant should be added to the expression. Care should be taken when the dates span more than one century.

NUPTIALITY

Marriage History [MH(01) to MH(08)]

Each marriage occupies a 10 digit field called MH(j), where j runs from 1 up to 8 marriages, as follows:

Variable, Location	Description
MH (01) (51-60)	*Data for first marriage*
MH (02) (61-70)	*Data for second marriage*
MH(03) (71-80)	*Data for third marriage*
...	...
MH (08) (121-130)	*Data for eighth marriage*

If the number of marriages is less than 8, all unused locations should be filled with 8's.

Marriage History [MH(01) to MH(08)] (continued)

The 10 digit field MH(j) for each marriage is made up of four components denoted M1(j), M2(j), M3(j) and M4(j) as defined below.

In the definitions we use notations such as Q410(j) to refer to the jth entry under Q410 in the table of Former Marriages, and use "n" to denote the number of unions. The number of unions n is obtained as follows: either count entries in the table of Former Marriages and add 1 if Q401 = 1, or use the following table:

IF		THEN n =
Q401 = 1	Q407 = 2	1
	Q407 = 1	Q408
Q401 > 1	Q402 = 1	1
	Q402 = 2	Q408

Component	Length	Description, Code	Source, Recode Instructions
M1(j)	1	*Type of union (j)* 8 = NA (no jth entry)	To be developed in each country. Code 1 if type of union not relevant.
M2(j)	4	*Date of beginning of marriage (j)* (century month) 8888 = NA (no jth entry)	IF / THEN M2(j) = j<n (former marriages): 12*Q409Y(j) + Q409M(j) j = n, Q401 = 1: 12*Q403Y + Q403M j = n, Q401 ≠ 1: 12*Q409Y(n) + Q409M(n)
M3(j)	1	*Status of marriage (j)* 1 = married 2 = widowed 3 = divorced 4 = separated 8 = NA (no jth entry) 9 = NS	j<n: Q410(j) + 1 † j = n, Q401 = 1, Q405 = 2: 4 j = n, Q401 = 1, Q405 ≠ 2: 1 j = n, Q401 ≠ 1: Q410(n) + 1†
M4(j)	4	*Date of termination of marriage (j)* 8888 = NA (no jth marriage or marriage not terminated)	j<n: 12*Q411Y(j) + Q411M(j) j = n, Q401 = 1, Q405 = 2: 12*Q406Y + Q406M j = n, Q401 = 1, Q405 ≠ 2: 8888 j = n, Q401 ≠ 1: 12*Q411Y(n) + Q411M(n)

†: *Recode M3(j) as '9' if Q410(j) = 9*

Marital Status (V101 to V108)

the following variables can all be created from the marriage history and previously defined variables.

Variable Location	Description, Code	Source, Recode Instructions
V101 (131-132)	*No. of times married* (0 - •)	Count entries in marriage history with M1(j) ≠ 8
V102 (133-134)	*No. of times married (4)* (0-4)	If V101 < 4 then V101 ELSE 4
V103 (135-136)	*Whether ever married* 1 = yes 0 = no (i.e., is single)	Sample of Ever-married women: = 1 always. All woman sample: If V101 > 0 then 1 ELSE 0
V104 (137-138)	*Status of first marriage* 1 = married 2 = widowed 3 = divorced 4 = separated 88 = NA (Never Married) 99 = NS	If M3(1)<8 then M3(1) If M3(1) = 8 then 88 If M3(1) = 9 then 99 (i.e., use field M3 for first entry in marriage history)
V105 (139-140)	*Whether first marriage dissolved* 1 = yes 0 = no, not dissolved 88 = NA (never married)	If V104 = 88 then 88 If V104 = 1 then 0 ELSE 1
V106 (141-142)	*Whether remarried after dissolution of first marriage* 1 = yes 0 = no, did not remarry 88 = NA (first marriage not dissolved, never married)	If V104 = 1 or 88 then 88 If V104 = 2, 3 or 4 *and* V101 > 1 then 1 ELSE 0
V107 *(143-144)*	*Current marital status* 1 = married 2 = widowed 3 = divorced 4 = separated 88 = never married 99 = NS	If V101 = 0 then 88 If V101 > 0 and M3 (V101) < 8 then M3(V101) If V101 > 0 and M3(V101) = 9 then 99 (i.e., if V101 is 1 take M3(1), if V101 is 2 take M3(2), etc.)
V108 (145-146)	*Whether currently married* 1 = yes 0 = no	If V107 = 1 then 1 ELSE 0

Age at marriage (V109 to V113)

All variables in this group are derived from the marriage history and previously defined variables

Variable, Location	Description, Code	Source, Recode Instructions
V109 (147-148)	*Age at first marriage* (10-49, say) 88 = NA (never married)	If V103 = 0 then 88 ELSE [M2(1) — V008]/12 (integral value)
V110 (149-150)	*Age at first marriage in seven groups* (1-7) 88 = NA	If V109 <15 15-17 18-19 20-21 22-24 25-29 30-49 88 then 1 2 3 4 5 6 7 88
V111 (151-152)	*Age at first marriage in five groups* (1-5) 88 = NA	If V109 <15 15-19 20-24 25-29 30-49 88 then 1 2 3 4 5 88
V112 (153-154)	*Age at first marriage in two groups* (1-2) 88 = NA	If V109 <20 20-49 88 then 1 2 88
V113 (155-156)	*Whether age over 24 and first married before age 25* 1 = yes 0 = no	If V010 > 24 *and* V109 < 25 then 1 ELSE 0 (In countries with very low age at marriage the limits 24 and 25 may need to be changed, for example to 19 and 20).

Marital duration (V114 to V123)

All variables here are derived from the marriage history and previously defined variables.

Variable, Location	Description, Code	Source, Recode Instructions
V114 (157-160)	*Months spent in marital state since first marriage* (0 - *) 8888 = never married (Note: this is the sum of durations of all marriages including current)	If V101 = 0 then 8888 If V101 = 1 then LAST If V101 > 1 then SUM + LAST where $SUM = \sum_{j=1}^{V101-1} [M4(j)-M2(j)]$ is the sum of durations of former marriages, and $LAST = \begin{cases} V007 - M2(V101), \text{ if } V107 = 1 \\ M4(V101) - M2(V101), \text{ if } V107 > 1 \end{cases}$ is the duration of the last marriage.
V115 (161-164)	*Months since first marriage* (0 - *) 8888 = never married	If V103 = 1 then V007 - M2(1) ELSE 8888
V116 (165-166)	*Years since first marriage* (0-39, say) 88 = NA (never married)	If V103 = 0 then 88 ELSE V115/12 (integral value)

Variable, Location	Description, Code	Source, Recode Instructions
V117 (167-168)	*5 year groups since first marriage* (1-7) 88 = NA	If V116 <5 5-9 10-14 15-19 20-24 25-29 30-39 88 then 1 2 3 4 5 6 7 88
V118 (169-170)	*10 year groups since first marriage* (1-4) 88 = NA	If V116 <10 10-19 20-29 30-39 88 then 1 2 3 4 88
V119 (171-172)	*5 or 10 year groups since first marriage* (1-4) 88 = NA	If V116 <5 5-9 10-19 20-39 88 then 1 2 3 4 88
V120 (173-174)	*Years since first marriage in three groups* (1-3) 88 = NA	If V116 <10 10-19 20-39 88 then 1 2 3 88
V121 (175-176)	*Whether first married at least 5 years ago* 1 = yes 0 = no	If V116 < 5 or = 88 then 0 ELSE 1
V122 (177-178)	*Whether first marriage lasted 5 or more years* 1 = yes 0 = no	If FIRST > 59 then 1 ELSE 0 where FIRST is the duration of first marriage defined as follows: If — Then FIRST = V101 = 0 — 0 V101>0, V104 = 1 — V007 - M2(1) V101>0, V104 >1 — M4(1) - M2(1)
V123 (179-180)	*Where married continuously for past 5 years* 1 = yes 0 = no	If V108 = 1 and LAST>59 then 1 ELSE 0 where LAST is duration of current marriage in months i.e. LAST = V007-M2(V101))

FERTILITY

Birth History [BH(01) to BH(24)]

Each birth occupies a 10 digit field called BH(j) where j runs from 1 up to 24 births, as follows:

Variable, Location	Description
BH(01) (181-190)	*Data for first birth*
BH(02) (191-200)	*Data for second birth*
BH(03) (201-210)	*Data for third birth*
⋮	⋮
BH (24) (411-420)	*Data for the 24th birth*

If the number of births is less than 24, all unused locations must be filled with 8's.

The 10-digit field BH(j) for each birth has five components denoted B1(j), B2(j), B3(j), B4(j) and B5(j), as defined below.

Component	Length	Description, Code	Source, Recode Instructions
B1(j)	1	*Order within a multiple birth (1-3)* 8 = NA (no jth birth)	If Q217M(j) ≠ 33 then B1(j) = 1 If Q217M(j) = 33 then B1(j) = B1(j-1) + 1†
B2(j)	4	*Date of birth* (Century month) 8888 = NA (no jth birth)	If Q217M(j) ≠ 33 then B2(j) = 12*Q217Y(j) + Q217M(j) If Q217M(j) = 33 then B2(j) = B2(j-1)
B3(j)	1	*Sex of child* 1 = boy 2 = girl 8 = NA (no jth birth)	Q218(j)
B4(j)	2	*Age at death, completed years*†† 88 = NA (no jth birth) 98 = still alive 99 = NS	If Q219(j) = blank then 88 If Q219(j) = 1 98 If Q219(j) = 2 then Q220Y(j)
B5(j)	2	*Age at death, completed months*†† 88 = NA 98 = still alive 99 = NS	If Q219(j) = blank then 88 If Q219(j) = 1 then 98 If Q219(j) = 2 then Q220M(j)

† It is assumed that dates for second or subsequent multiple births have been coded as "33". See *WFS Editing and Coding Manual.*

†† It is assumed that age at death is coded in completed months and years, see *Modifications to the Core Questionnaire.* Note also that the WFS program DEIR does not use code 98 (88 = no birth, still alive)

Other pregnancies (V201 to V206)

V201-V205 are constructed by counting non-blank entries (i.e. entries with Q233 ≠ blank) satisfying conditions specified below.

Variable, Location	Description, Code	Source, Recode Instructions
V201 (421-422)	*No. of wasted pregnancies* (0-*)	count entries in table of "other pregnancies" with Q236 ≠ 1 (i.e. all pregnancies leading to other than a live birth).
V202 V423-424	*No. of still-births* (0-*)	count entries in table of "other pregnancies" with Q235 ≥7 and Q236 ≠ 1 (i.e. all pregnancies leading to a still birth).
V203 (425-426)	*No. of spontaneous abortions* (0-*)	count entries in table of "other pregnancies" with — if abortion module not used: Q235<7 (all abortions) —if abortion module is used: Q235<7 and Q238 = 2 (spontaneous abortions)
V204 (427-428)	*No. of induced abortions* (0-*) 88 = NA	— if abortion module is not used: code 88 — if abortion module is used: count entries with Q235<7 and Q238 = 1 (induced abortions)
V205 (429-430)	*Duration of current pregnancy* 0 = not pregnant (1-9)	— if Q226 = 1 THEN 9-[(12*Q227Y + Q227M)-V007] (if this value is 0, recode as 1) — if Q226>1 THEN 0
V206 (431-432)	*Whether currently pregnant* 1 = yes 0 = nor or D.K.	If V205>0 then 1 ELSE O

Cumulative fertility (V207 to V212)

Variables V207, V208 and V212 in this group, V213 and V220 regarding living children, and V223-V227 regarding period fertility, *all* involve counts of events in the birth history. The programmer may find it convenient to create all these variables in a single loop through BH(01) to BH(24). The loop should of course stop as soon as B1(j) = 8, meaning that there are no more births in the sequence.

Variable, Location,	Description, Code	Source, Recode Instructions
V207 (433-434)	*Number of "fertile pregnancies"* (including current if any) (0-24)	*Count* entries in Birth History with B1(j) = 1 and add V206
V208 (435-436)	*No. of children ever born* (0-24)	*Count* entries in Birth History with B1(j) ≠ 8
V209 (437-438)	*No. of children ever born* (0-9)	If V208<9 then V208 ELSE 9

Cumulative fertility (V207 to V212 continued)

Variable, Location	Description, Code	Source, Recoding Instructions
V210 (439-440)	*No. of children ever born, including current pregnancy* (0-5)	If V208<5 then (V208 + V206) ELSE 5
V211 (441-442)	*Children ever born including current pregnancy* (1-2)	If V210<4 then 1 ELSE 2
V212 (443-444)	*Number of Sons ever born* (0-24)	*Count* entries in Birth History with B3(j) = 1

Living children (V213 to V222)

These variables are also derived from the Birth History and previously defined variables.

Variable, Location	Description, Code	Source, Recode Instructions
V213 (445-446)	*No. of living children* (0-24)	*Count* entries in Birth History with B1(j) ≠ 8 and B4(j) = 98†
V214 (447-448)	*No. of living children* (0-9)	If V213<9 then V213 ELSE 9
V215 (449-450)	*No. of living children* (0-5)	If V213<5 then V213 ELSE 5
V216 (451-452)	*No. of living children (1-4)*	If V213 then {<3, 3, 4, 5+} → {1, 2, 3, 4}
V217 (453-454)	*No. of living children* (1-3)	If V213 then {<4, 4-6, 7+} → {1, 2, 3}
V218 (455-456)	*No. of living children* (1-2)	If V213 then {<4, 4+} → {1, 2}
V219 (457-458)	*No. of living children, including current pregnancy* (0-9)	If V213<9 then (V213 + V206) ELSE 9
V220 (459-460)	*No. of living sons* (0-24)	*Count* entries in Birth History with B3(j) = 1 and B4(j) = 98†
V221 (461-462)	*No of living sons* (0-5)	If V220<5 then V220 ELSE 5
V222 (463-464)	*No. of living daughters* (0-5)	If (V213 minus V220)<5 then (V213 minus V220) ELSE 5

† If "still alive" children are coded with B4 = 88, then use 88 not 98.

Period fertility (V223 to V227)

All variables in this group can be derived from the birth and marriage histories and previously defined variables.

Variable, Location	Description, Code	Source, Recode Instructions
V223 (465-466)	*Children born before or within first 5 years of marriage* (0-8) 88 = NA (not married for at least 5 years)	If V121 = 0 THEN 88 ELSE *count* entries in Birth History with B2(j)<M2(1) + 60 and B3(j) ≠ 8
V224 (467-468)	*Sons born before or within first 5 years of marriage* (0-8) 88 = NA (not married for at least 5 years)	If V121 = 0 THEN 88 ELSE *count* entries in Birth History with B2(j)<M2(1) + 60 AND B3(j) = 1
V225 (469-470)	*Children born in past 5 years* (0-8)	*Count* entries in Birth History with B2(j)>V007-60 and B3(j) ≠ 8
V226 (471-472)	*Sons born in past 5 years* (0-8)	*Count* entries in Birth History with B2(j)>V007-60 and B3(j) = 1
V227 (473-474)	*Living children 5 years ago* (0-24)	This is a count of children born at least 5 years ago who are either alive or died in the past 5 years. *Count* entries in Birth History with [B2(j)≤V007-60] *AND* {[B4(j) = 98] or [B2(j) + 12*B4(j) + B5(j)>V007-60]}† Important: If B4(j) or B5(j) is 99 set it to 0 to define V227

Birth intervals (V228 to V236)

This final group of fertility variables is also derived from the birth and marriage histories and previously defined variables.

Variable. Location	Description, Code	Source, Recode Instructions
V228 (475-478)	*First birth interval, months* (0-*) 6666 = negative interval 8888 = no interval	

V103 = 1	V208>0	B2(1)≥M2(1)	B2(1)-M2(1)
		B2(1)<M2(1)	6666
	V208 = 0	V206 = 1	(V007 + 9-V205)-M2(1)
		V206 = 0	8888
V103 = 0			8888

† If "still alive" children are coded with B4 = 88, then use 88 not 98.

Variable, Location	Description, Code	Source, Recode Instructions
V229 (479-480)	*First birth interval, Grouped* (1-8) 1 = negative interval 8 = no birth within first 5 years (or NA, never married)	If V228 then 6666 → 1 0-7 → 2 8-11 → 3 12-23 → 4 24-35 → 5 36-47 → 6 48-59 → 7 60-500, 8888 → 8
V230 (481-484)	*Last closed birth interval, months* (0-*) 6666 = negative interval 8888 = no interval (married with no children or single with less than 2 children)	V207≥2, V206 = 1: (V007 + 9-V205)-B2(V208) V207≥2, V206 = 0: B2(V208)-B2(V208-m) where m = B1 (V208)† V207<2: V228
V231 (485-486)	*Last closed birth interval, grouped.* (1-5) 88 = NA	If V230 then <12 or 6666 → 1 12-23 → 2 24-35 → 3 36-47 → 4 48-500 → 5 8888 → 88
V232 (487-490)	*Open birth interval, months* (0-*) 8888 = no open interval (pregnant or never married with no children)	V207>0, V206 = 1: 8888 V207>0, V206 = 0: V007-B2(V208) V207 = 0, V103 = 1: V007-M2(1) V207 = 0, V103 = 0: 8888
V233 (491-492)	*Open birth interval, grouped* (1-5) 88 = NA (pregnant or never married with no children)	If V232 then <12 → 1 12-23 → 2 24-35 → 3 36-47 → 4 48-500 → 5 8888 → 88
V234 (493-494)	*Whether ever married and has at least one fertile pregnancy (including current)* 1 = yes 0 = no (never married, or has had no fertile pregnancy)	If V103 = 1 and V207>0 then 1 ELSE 0
V235 (495-496)	*Whether ever married and has had at least 2 fertile pregnancies (including current)* 1 = yes 0 = no (never married, or has not had at least 2 fertile pregnancies)	If V103 = 1 and V207>1 then 1 ELSE 0
V236 (497-498)	*Whether ever married with at least 2 fertile pregnancies and closed interval less than 5 years* 1 = yes 0 = no	If V235 = 1 and V230<60 then 1 ELSE 0

† B2(V208-m) is the date of the next-to-last fertile pregnancy. If the last birth is single, m = 1 and we obtain B2(V208-1), the date of the next-to-last birth. If the last birth is double, m = 2 and we obtain B2(V208-2), the date of next-to-last-but-one birth, and so on.

Breastfeeding (V301 to V306)

Variables V301 and V302 in this group are based on the questionnaire, while V303 to V306 are derived variables.

We assume that Q222 and Q225 have been coded as follows:

0-76	= months breastfed (values over 76 recoded to 76)
96	= still breastfeeding
97	= breastfed until child died
98 or blank	= did not breastfeed (or not applicable)
99	= duration not stated

The recode instructions for V302 transform codes 96 and 97 into actual durations. For V301, codes 96 and 97 are retained.

Variable; Location	Description, Code	Source, Recode Instructions
V301 (499-500)	*Length of breastfeeding in the open interval* 0-76 months 88 = NA (has not had at least 1 live birth) 96 = still breastfeeding 97 = until child died 98 = did not breastfeed 99 = NS	IF / THEN V206 = 1 or V208 = 0 → 88 V206 = 0 AND V208>0 → Q222 = blank → 98 Q222 = 97 → 97 Q222 = 96 → 96 Q222 = 0-76 → Q222
V302 (501-502)	*Length of breastfeeding in the last closed interval* 0-76 months 88 = NA (has not had at least 2 fertile pregnancies) 99 = NS	Source is Q222 and Q225 IF / THEN V207≤1 → 88 V207>1, V206 = 1, Q222 = blank or 98 → 98 Q222 = 97 → 12*B4(V208) + B5 (V208) † Q222 = 96 → V007-B2(V208)† Q222 = 0-76 or 99 → Q222 V206 = 0, Q225 = blank or 98 → 98 Q225 = 97 → 12*B4(V208-m) + B5(V208-m)† Q225 = 0-76 or 99 → Q225 Where m = B1(V208), see note to V230.

†If value >76, recode as "99".

Variable, Location	Description, Code	Source, Recode Instructions
V303 (503-504)	*Length of breastfeeding* Grouping 1 (1-18) 88 = NA 99 = NS	If V302 = 98, 0-2, 3-5, 6, 7-8, 9-11, 12, 13-17, 18 then 1, 2, 3, 4, 5, 6, 7, 8, 9 If V302 = 19-23, 24, 25-29, 30, 31-35, 36, 37-47, 48 then 10, 11, 12, 13, 14, 15, 16, 17 If V302 = 49-76, 88, 99 then 18, 88, 99
V304 (505-506)	*Length of breastfeeding* Grouping 2 (1-13) 88 = NA 99 = NS	If V303 <11,88,99 | 11 | 12-18 then V303 | 11 + R | 13 where R equals '0' or '1' at random. The purpose is to divide V302 = '24' into two random halves.
V305 (507-508)	*Length of breastfeeding* Grouping 3 (1-12) 88 = NA 99 = NS	If V304 = 12 or 13 then (V304-1) ELSE V304
V306 (509-510)	*Whether last closed interval exceeds 32 months and child survived at least 24 months* 1 = yes 0 = no	IF THEN V306 = V207≥2 | 32<V230≤500 | SURV≥24 | 1 V207≥2 | 32<V230≤500 | SURV<24 | 0 V207≥2 | V230<33 or V230>500 | 0 V207<2 | 0 where SURV is the time that the child in question survived. To calculate SURV first locate the birth in question. This is the Kth birth where IF THEN V206 = 1 | K = V208 V206 = 0 | K = V208-B1(V208) If this is a single birth, i.e., B1(K) = 1, we take SURV = 12*B4(K) + B5(K). In the case of twins or triplets, however, we must consider the child who survived the longest. If it is a twin, i.e., B1(K) = 2, we take SURV=MAX{12*B4(K) + B5(K), 12*B4(K-1) + B5(K-1)}. Let M = B1(K) be the multiplicity of the Kth birth. Then SURV = MAX{12*B4(j) + B5(j)} j = K,K-1, . . . ,K-M + 1 Important: In all cases if B4 or B5 is 99 it should be recoded to 0 before calculating SURV.

PART 2 (V401-V907)

If this part of the recode file is being created separately, then the recode program must first create the five variables below which are referred to in subsequent recode specifications.

Variable	Description	Source, Recode Instructions
V103	*Whether ever married* 1 = yes 0 = no	IF Q401 = 1-4 then 1 ELSE 0 Depending on code used for Q401
V108	*Whether currently married* 1 = yes 0 = no	IF Q401 = 1 and Q405 ≠ 2 then 1 ELSE 0
V206	*Whether currently pregnant* 1 = yes 0 = no	IF Q226 = 1 then 1 ELSE 0
V208	*Children ever born* (0-24)	V208 = Q215
V213	*Living Children* (0-24)	IF Q214 = blank then Q215 ELSE (Q215 minus Q214)

Note: V208 and V213 assume that questions Q214 and Q215 have been carefully edited to agree with the number of events entered in the birth history.

Exposure Status (V401-V407)

Variable, Location	Description, Code	Source, Recode Instructions
V401 (511-512)	*Husband/wife sterilized for contraceptive reasons* 1 = wife 2 = husband 3 = wife, but not for contraceptive reasons 4 = other cases	For the Core Questionnaire: If Q511 = 1 or Q526 = 1 then 1 If Q511 = 2,9 or Q526 = 2,9 then 3 If Q505 = 10 or Q512 = 1 then 2 ELSE 4 For Fertility Regulation Module:

Q507 = 10				2
Q507 ≠ 10	Card 8, col. 18 ≠ 5			4
	Card 8, Col. 18 = 5 (blue)†	Q572 = 1		1
		Q572 = 2 or 9		3
		Q572 ≠ (1,2, 9)	Q574 = 1	2
			Q574 ≠ 1	4

or, written in another form:

IF Q507 = 10 Then 2
Else If card 8, col. 18 ≠ 5 Then 4
Else If Q572 = 1 Then 1
Else If Q572 = 2 or 9 Then 3
Else If Q574 = 1 Then 2
Else 4

† By "blue" we mean that blue pages of the Fertility Regulation module are used. The colour of pages used is identified by card 8, col. 18.

Variable, Location	Description, Code	Source, Recode Instructions
V402 (513-514)	*Exposure status* 1 = pregnant 2 = not pregnant and (widowed, divorced or separated) 3 = not pregnant and married and living with husband and husband or wife sterilized for contraceptive reasons 4 = not pregnant and married and living with husband and some other self-reported fecundity impairment 5 = not pregnant and married and living with husband and reported as fecund 88 = never married (if applicable)	V103 = 0 → 88 V103 = 1, V206 = 1 → 1 V103 = 1, V206 = 0, V108 = 0 → 2 V103 = 1, V206 = 0, V108 = 1, V401 = 1 or 2 → 3 V103 = 1, V206 = 0, V108 = 1, V401 = 3 → 4 V103 = 1, V206 = 0, V108 = 1, V401 = 4, Q509 = 2† → 4 V103 = 1, V206 = 0, V108 = 1, V401 = 4, Q509 ≠ 2† → 5 (Note that for a properly edited questionnaire the condition "Q509 = 2" above is equivalent to the condition "(Q509 = 1, 3 or 9) *or* Q504 = 1". The skip pattern in the questionnaire dictates this to be the case). † *For the Fertility Regulation Module, replace "Q509" by "Q506 or Q508". Hence the last two instructions will be written as (given V103 = 1, V206 = 0, V108 = 1 and V401 = 4):* *Q506 = 2 or Q508 = 2* → *4* *Q506 ≠ 2 and Q508 ≠ 2* → *5* *That is, if either of the two questions = 2 then V402 = 4* *Else V402 = 5.*
V403 (515-516)	*Whether currently married and 'fecund'* 1 = yes 0 = no	If V108 = 1 *and* V402 = 1, 3 or 5 then 1 Else = 0
V404 (517-518)	*'Exposed' (currently married, fecund and not pregnant)* 1 = yes 0 = no	If V402 = 3 or 5 then 1 ELSE 0
V405 (519-520)	*Exposed (excluding contraceptively sterilised) with at least one live birth* 1 = yes 0 = no	If V402 = 5 *and* V208 > 0 then 1 ELSE 0
V406 (521-522)	*Whether currently married and non-pregnant* 1 = yes 0 = no (not married, or is pregnent)	If V108 = 1 *and* V206 = 0 then 1 ELSE 0
V407 (523-524)	*Whether ever married and currently non-pregnant* 1 = yes 0 = no (never married, or is pregnant)	If V103 = 1 *and* V206 = 0 then 1 ELSE 0

Fertility preferences (V501 to V513)

Variable, Location	Description, Code	Source, Recode Instructions
V501 (525-526)	*Desire for future birth* 1 = wants future birth 2 = wants no (more) children 3 = undecided 88 = NA (not currently married, fecund) 99 = NS	Core Questionnaire

V403 = 1	V402 = 3		2
	V402 = 1 or 5	Q514 or Q517 or Q520 = 1†	1
		Q514 or Q517 or Q520 = 2	2
		Q514 or Q517 or Q520 = 3	3
		Q514 or Q517 or Q520 = 9	99
V403 = 0			88

For the Fertility Regulation Module

Replace "Q514 or Q517 or Q520" by
"Q510 or Q514" (grey);
"Q519 or Q539" (pink);
"Q548" (green);
"Q554" (yellow).

Hence the recode instruction becomes

V403 = 1	V402 = 3		2
	Card 8, Col. 18 = 1 (grey)	Q510 or Q514	1
		Q510 or Q514 = 2	2
		Q510 or Q514 = 3	3
		Q510 or Q514 = 9	99
	Card 8, Col. 18 = 2 (pink)	Q519 or Q539 = 1	1
		Q519 or Q539 = 2	2
		Q519 or Q539 = 3	3
		Q519 or Q539 = 9	99
	Card 8, Col. 18 = 3 (green)	Q548 = 1	1
		Q548 = 2	2
		Q548 = 3	3
		Q548 = 9	99
	Card 8, Col. 18 = 4 (yellow)	Q554 = 1	1
		Q554 = 2	2
		Q554 = 3	3
		Q554 = 9	99
V403 = 0			88

†We note that for a particular questionnaire (properly edited) at most one of the three questions is relevant. Hence if NA to Q514, Q517 and Q520 are read as "0", the above instruction can be simplified as follows:

V403 = 1	*Q514 + Q517 + Q520 = 0*	*2*
	Q514 + Q517 + Q520 = 1, 2, or 3	*Q514 + Q517 + Q520*
	Q514 + Q517 + Q520 = 9	*99*
V403 = 0		*88*

Similar simplification is possible for the Fertility Regulation Module.

V502 (527-528)	*Currently married fecund and wants no more children* 1 = yes 0 = no (not currently married, fecund or not "wanting no more children")	If V501 = 2 then 1 ELSE 0

Variable, Location	Description, Code	Source, Recode Instructions
V503 (529-530)	*Currently married fecund non-pregnant, and wants no more children* 1 = yes 0 = no	If V404 = 1 *and* V501 = 2 then 1 ELSE 0
V504 (531-532)	*Currently married fecund non-pregnant, and wants another child* 1 = yes 0 = no	If V404 = 1 *and* V501 = 1 then 1 ELSE 0
V505 (533-534)	*Desire for the last pregnancy* 1 = last pregnancy wanted 2 = last pregnancy not wanted 3 = undecided 88 = NA (never married or has had no fertile pregnancy) 99 = NS If FR Module is not used, always = "88'.	For Fertility Regulation Module only:

V103 = 1 AND V206 + V208 >0	V501 = 1				1
	V501 ≠ 1	Card 8, Col. 18 = 1 (grey)	Q513 = 1		1
			Q513 = 2		2
			Q513 = 3		3
			Q513 = 9		99
		Card 8 Col. 18 = 2 (pink)	Q533 = 1		1
			Q533 = 2		2
			Q533 = 3		3
			Q533 = 9		99
		Card 8 Col. 18 = 3 (green)	Q550 or Q552 = 1		1
			Q550 or Q552 = 2		2
			Q550 or Q552 = 3		3
			Q550 or Q552 = 9		99
		Card 8 Col. 18 = 4 (yellow)	Q562 = 1		1
			Q562 = 2		2
			Q562 = 3		3
			Q562 = 9		99
		Card 8 Col. 18 = 5 (blue)	Q583 or Q594 = 1		1
			Q583 ≠ 1 and Q594 ≠ 1	Q588 or Q595 = 1	1
				Q588 or Q595 = 2	2
				Q588 or Q595 = 3	3
				Q588 or Q595 = 9	99
V103 = 0 OR V206 + V208 = 0					88

V506 (535-536)	*Whether last pregnancy unwanted* 1 = unwanted 0 = wanted or undecided 88 = NA 99 = NS	For Fertility Regulation Module only			

If V505 =	1	2	3	88	99
then	0	1	0	88	99

Variable, Location	Description, Code	Source, Recode Instructions
V507 (537-538)	*Whether prefers next child to be a boy* 1 = prefers boy 0 = prefers girl, either, or given "other" answer 88 = NA (not currently married fecund or not wanting another child) 99 = preference not stated	Core Questionnaire
V508 (539-540)	*Whether prefers next child to be a girl* 1 = prefers girl 0 = prefers boy, either, or gives "other" answers 88, 99 = as for V507	For the Fertility Regulation Module Replace "Q515 or Q518" above by "Q511 or Q515" (grey) or "Q520 or Q540" (pink) (green and yellow pages are covered by Q228). Hence:
V509 (541-542)	*No of additional children wanted* (0-21) 88 = NA (not currently married fecund) 97 = undecided 98 = other (non-numeric answers) 99 = NS	If the respondent desires a future birth (V501 = 1), we define a source question, say 'X', from which V509 will be defined subsequently. Core Questionnaire

		V507	V508
V501 = 1	Q228 or Q515 or Q518 = 1	1	0
	Q228 or Q515 or Q518 = 2	0	1
	Q228 or Q515 or Q518 = 3 to 8	0	0
	Q228 or Q515 or Q518 = 9	99	99
V501 ≠ 1		88	88

				V507	V508
V501 = 1	V206 = 1	Q228 = 1		1	0
		Q228 = 2		0	1
		Q228 = 3 to 8		0	0
		Q228 = 9		99	99
	V206 = 0	Card 8, Col. 18 = 1 (grey)	Q511 or Q515 = 1	1	0
			Q511 or Q515 = 2	0	1
			Q511 or Q515 = 3 to 8	0	0
			Q511 or Q515 = 9	99	99
		Card 8, Col. 18 = 2 (pink)	Q520 or Q540 = 1	1	0
			Q520 or Q540 = 2	0	1
			Q520 or Q540 = 3 to 8	0	0
			Q520 or Q540 = 9	99	99
V501 ≠ 1				88	88

V501 = 88			V509 = 88
V501 = 2			V509 = 0
V501 = 3			V509 = 97
V501 = 99			V509 = 99
V501 = 1	V206 = 1		X = Q521
	V206 = 0	V208 = 0	X = Q516
		V208>0	X = Q519

Variable, Location	Description, Code	Source, Recoding Instructions
V509 (Cont.)	Additional code for Fertility Regulation Module: 66 = last pregnancy not wanted	Fertility Regulation Module

V501 = 88			V509 = 88
V501 = 2	V505 = 2		V509 = 66
	V505 = 1, 3, 99 or 88		V509 = 0
V501 = 3	V505 = 2		V509 = 66
	V505 = 1,3,99 or 88		V509 = 97
V501 = 99	V505 = 2		V509 = 66
	V505 = 1,3,99 or 88		V509 = 99
V501 = 1	Card 8, col. 18 = 1 (grey)	V208 = 0	X = Q516
		V208>0	X = Q512
	Card 8, col. 18 = 2 (pink)	V208 = 0	X = Q541
		V208>0	X = Q521
	Card 8, col. 18 = 3 (green)		X = Q549
	Card 8, col. 18 = 4 (yellow)		X = Q555

To define V509 from 'X' we need to consider responses given as ranges (e.g., "2 to 4", coded as 24). See the WFS *Editing and Coding Manual* for the justification of the following procedure (Note: the procedure will be much simplified if the coding is modified as explained in *Modifications to the Core Questionnaires)*

If	then V509 =
X<22	X
X = 91 to 97	(X-89)/2
X = 30,40,50,60,70,80,90	(X/20) + 5
X = 71 to 77, 81 to 88	98
X = 99	99
ELSE	{X-[9*(X/10)]}/2

Note: all divisions are truncated to get the integral part. Where a range is specified, the mean has been taken, truncated to the integral part.

V510 (543-544)	*No. of additional children wanted* (0-5) 66, 88, 97, 98, 99 as for V509	If V509 then	0-5	6-21	≥66
			V509	5	V509

Variable, Location	Description, Code	Source, Recoding Instructions
V511 (545-546)	*Total number of children desired* (0-21) 98 = other answers 99 = NS	We first define a source question, say "X" from which V511 will be defined subsequently Core Questionnaire: X = Q531 F.R. Module: Card 8 col. 18 = 1: X = Q599 (grey) = 2: X = Q599 (pink) = 3: X = Q599 (green) = 4: X = Q599 (yellow) = 5: X = Q599 (blue) In order to consider responses given as ranges, V511 is defined from "X" in exactly the same way as the table shown above for V509.
V512 (547-548)	*Total number of children desired (9)* (0-9) 98, 99 as for V511	If V511 then 0-9, 98,99 → V511 10-21 → 9
V513 (549-550)	*Total desired minus number alive (including current pregnancy)* 1 = desired less than living 2 = equal 3 = desired more than living 4 = other answers to number desired 99 = NS	V511 = 99 → 99 V511 = 98 → 4 V511<22: (V511-V206-V213)<0 → 1 V511<22: (V511-V206-V213) = 0 → 2 V511<22: (V511-V206-V213)>0 → 3

CONTRACEPTION

Knowledge (V601 to V617)

Variable, Location	Description, Code	Source, Recoding Instructions
V601 *(551-552)*	*Whether knows pill*	Code: 2 = knows (without probing) 1 = heard of (after probing) 0 = not heard of 88 = NA (method not included in country questionnaire)† 99 = NS assuming the coding scheme for Q304-Q314 knowledge 0 mentioned spontaneously 1 heard of 2 not heard of 9 not stated V601-V614: (For Q3nnK, use appropriate questions)
V602 (553-554)	*Whether knows IUD*	
V603 (555-556)	*Whether knows any other female scientific methods*	
V604 (557-558)	*Whether knows douche*	
V605 (559-560)	*Whether knows condom*	
V606 (561-562)	*Whether knows rhythm*	
V607 (563-564)	*Whether knows withdrawal*	
V608 (565-566)	*Whether knows abstention*	
V609 (567-568)	*Whether knows female sterilisation*	
V610 (569-570)	*Whether knows male sterilization*	
V611 (571-572)	*Whether knows injection*	
V612 (573-574)	*Whether knows country specific method 1 (if any)*	
V613 (575-576)	*Whether knows country specific method 2 (if any)*	
V614 (577-578)	*Whether knows country specific method 3 (if any)*	
V615 (579-580)	*Whether knows any other method*† 1 = yes 0 = no	Assuming "other methods" coded 15 If Q314M or Q317 = 15 then 1 ELSE 0
V616 (581-582)	*Knowledge of any method* 1 = knows no method 2 = knows only inefficient method(s) 3 = knows some efficient methods(s)	If all variables V601 to V615 = 0 or 99 or 88 then 1 If V601 or V602 or V603 or V605 or V609 or V610 or V611 = 1 or 2 then 3 ELSE 2
V617 (583-584)	*Whether knows any method* 1 = yes, knows 0 = no, does not know any method	If V616 = 1 then 0 ELSE 1

Method not included in questionnaire		88
Q3nnK = 0		2
Q3nnK = 1		1
Q3nnK = 2	Method mentioned in Q317	1
	Method not mentioned in Q317	0
Q3nnK = 9	Method mentioned in Q317	1
	Method not mentioned in Q317	99

†*May also include code "88" for single women if the relevant questions are not asked of that category of women.*

Ever use (V618-V634)

Variable, Location	Description, Code	Source, Recoding Instructions
V618 (585-586)	*Ever used pill?*	CODE: 1 = Yes 0 = No 88 = NA (method not included in country questionnaire)† 99 = NS V618-V625, V628-V631: For Q3nnU, use column 3 (ever used) of appropriate questions (Q304-Q311, Q314) If Q3nnU = 1 or method mentioned in Q317 then 1 If Q3nnU = 2 or blank and method not mentioned in Q317 then 0 If Q3nnU = 9 and method not mentioned in Q317 then 99 V626: If V401 = 1 then 1 ELSE 0 V627: If V401 = 2 then 1 ELSE 0
V619 (587-588)	*Ever used IUD?*	
V620 (589-590)	*Ever used any other female scientific methods?*	
V621 (591-592)	*Ever used douche?*	
V622 (593-594)	*Ever used condom?*	
V623 (595-596)	*Ever used rhythm?*	
V624 (597-598)	*Ever used withdrawal?*	
V625 (599-600)	*Ever used abstention?*	
V626 (601-602)	*Whether sterilized for contraceptive purposes?*	
V627 (603-604)	*Whether husband sterilized?*	
V628 (605-606)	*Ever used injection?*	
V629 (607-608)	*Whether ever used country specific method 1*	
V630 (609-610)	*Whether ever used country specific method 2*	
V631 (611-612)	*Whether ever used country specific method 3*	
V632 (613-614)	*Ever used any other method?*† 1 = yes 0 = no	Assuming "other methods" coded 15 If Q314U = 1 or Q317 = 15 then 1 ELSE 0
V633 (615-616)	*Ever use of any method* 1 = never used any method 2 = used only inefficient methods(s) 3 = used some efficient methods(s)	If all variables V618 to V632 = 0 or 99 or 88 then 1 If V618 or V619 or V620 or V622 or V626 or V627 or V628 = 1 then 3 ELSE 2
V634 (617-618)	*Whether used any method* 1 = yes 0 = no	If V633 = 1 then 0 ELSE 1

†May also include code "88" for single women if the relevant questions are not asked of that category of women.

Current use (V635 to V639)

These variables are defined for currently married, fecund, not pregnant women and for all contraceptively sterilized women. i.e. they are applicable only for "exposed" women plus those contraceptively sterilized but not currently married.

Variable, Location	Description, Code	Source, Recoding Instructions
V635 (619-620)	*Current method being used* 0 = no method (and is exposed) 1 = pill 2 = IUD 3 = other female scientific 4 = douche 5 = condom 6 = rhythm 7 = withdrawal 8 = abstention 9 = female sterilization (contraceptive) 10 = male sterilization 11 = injection 12 = country specific method 1 13 = country specific method 2 14 = country specific method 3 15 = any other method 88 = NA (pregnant, or not currently married, or not fecund—excluding those classified in code '9'.) 99 = currently using but method not stated	V401 = 1 → 9 V401 = 2 → 10 V401 = 3 or 4, V402 ≠ 5 → 88 V401 = 3 or 4, V402 = 5, Q504 = 1 → Q505 V401 = 3 or 4, V402 = 5, Q504 ≠ 1 → 0 Notes: (1) For the Fertility Regulation module replace "Q504" by "Q505", and "Q505" by "Q507". (2) It is assumed that in Q505 (or Q507, F.R. module) the method is coded as indicated for the code for V635. (3) Never married women (V402 = 88) have been coded as '88'. (4) Codes 0-15,99 include only 'exposed' women, except for code '9' where any women (whether currently married or not) who are *contraceptively* sterilized are also included. In variables V636, V637 and V638 this latter group is included as using an 'efficient' method of contraception. This group does not appear in tables confined to 'exposed' women, but is included here to facilitate construction of V643 and V645 on pattern of use.
V636 (621-622)	*Current use of any method* 1 = using no method 2 = only inefficient method 3 = some efficient method (including sterilization)† 88 = NA (not exposed)	If V635 = 0 then 1; 4,6-8, 12-15, 99 then 2; 1-3, 5, 9-11 then 3; 88 then 88
V637 (623-624)	*Whether current using any method* 1 = yes† 0 = no 88 = NA (not exposed	If V636 = 2 or 3 then 1; 1 then 0; 88 then 88
V638 (625-626)	*Whether currently using an efficient method* 1 = yes 0 = no, NA	If V636 = 3 then 1 ELSE 0
V639 (627-628)	*Whether currently using an efficient method, and wanting no more children* 1 = yes (using and wanting no more) 0 = no, NA	If V636 = 3 *and* V501 = 2 then 1 ELSE 0

†*V636 = '3' or V637 = '1' includes women sterilized for contraceptive reasons, whether or not they are currently married.*

Variable, Location	Description, Code	Source, Recoding Instructions
V640 (629-630)	*Method used in the last closed interval* 0 = no method used in the interval 1-8 } as for V635 11-15 } 88 = NA (no closed interval); or FR module not used† 99 = used a method, but method not stated	Defined only for the F.R. Module: V640

V103 = 0 OR (V206 + V208) = 0						88
V103 = 1 AND (V206 + V208) >0	V634 = 0					0
	V634 = 1	Card 8, col. 18 = "4" (yellow) ††	V208 = 0	Q554 = 1		Q557
				Q554 ≠ 1		Q564
			V208>0	Q554 = 1	Q558 = 1	Q559
					Q558 ≠ 1	0
				Q554 ≠ 1	Q565 = 1	Q566
					Q565 ≠ 1	0
		Card 8, col. 18 = "5" (blue)††	Q583 = 1	Q584 = 1		Q585
				Q584 ≠ 1		0
			Q583 ≠ 1	Q589 = 1		Q590
				Q589 ≠ 1		0
		Card 8, col. 18 = 2 (pink)††	Q519 = 1	Q526 = 1		Q527
				Q526 ≠ 1		0
			Q519 ≠ 1	Q534 = 1		Q535
				Q534 ≠ 1		0

Notes:

(1) For example if (V103 = 1 *and* V206 + V208>0 *and* V634 = 1 *and* Card 8, col. 18 = 4 *and* V208 = 0 and Q554 ≠ 1) then V640 = Q564

(2) If "not applicable" questions are read as *zeros* then the above can be expressed more simply as follows: This approach also applies to several other variables from the Fertility Regulation Module:

V103 = 0 OR V206 + V208 = 0			88
V103 = 1 and V206 + V208 >0	V634 = 0		0
	V634 = 1	Card 8, col. 18 = 4 (yellow)	Q557 + Q559 + Q564 + Q566
		Card 8, col. 18 = 5 (blue)	Q585 + Q590
		Card 8, col. 18 = 2 (pink)	Q527 + Q535

† *Code "88" includes never-married women, V103 = 0 (if the relevant questions are not asked of these women).*
It is assumed that method in the source questions (Q557, Q590, etc.) is coded in the same way as the code for V640.

†† *Alternatively these conditions may be replaced by V402 = "1", V402 = "2, 3 or 4" and V402 = "5" respectively.*

Variable, Location	Description, Code	Source, Recoding Instructions
V641 (631-632)	*Use of any method in the closed interval* 1 = used no method 2 = used an inefficient method 3 = used an efficient method 88 = NA (as for V640)	Defined only for the F.R. Module If V640 = / then 0 → 4,6-8,12-15,99 → 1-3,5 or 1 → 88 1 → 2 → 3 → 88
V642 (633-634)	*Use of any method in closed interval (2)* 1 = used 2 = did not use 88 = NA (as for V640)	Defined only for the F.R. Module If V640 / then 1-8,11-15,99 → 0 → 88 1 → 2 → 88
V643 (635-636)	*Method used in the open interval* 0 = did not use 1-15 as for V635 88 = NA (no open interval i.e., is pregnant)† 99 = used method but method not stated	Core Questionnaire V103 = 0 OR V206 = 1 → 88† V103 = 1 AND V206 = 0: V634 = 0 → 0 V634 = 1: V635 ≠ 0 and V635 ≠ 88 → V635 V635 = 0 or 88: V108 = 1, V208>0: Q507 = 1 → Q508; Q507 ≠ 1 → 0 V108 = 1, V208 = 0 → Q508 V108 = 0, V208>0: Q529 = 1 → Q530; Q529 ≠ 1 → 0 V108 = 0, V208 = 0 → Q530 Fertility Regulation Module: The first three lines of the above instructions for the Core Questionnaire remain unchanged. Hence we give below instructions only for the case "V103 = 1" *and* V206 = 0 *and* V634 = 1 *and* V635 = 0 or 88" Card 8, col. 18 = 2 (pink): V208>0, Q519 = 1, Q523 = 1 → Q524; Q523 ≠ 1 → 0 V208>0, Q519 ≠ 1, Q531 = 1 → Q532; Q531 ≠ 1 → 0 V208 = 0, Q539 = 1 → Q543; Q539 ≠ 1 → Q546 Card 8, col. 18 = 5 (blue): V208>0, Q581 = 1 → Q582; Q581 ≠ 1 → 0 V208 = 0 → Q579

† *Code "88" includes never-married women V103 = 0 (if the relevant questions are not asked of such women in the sample).*
It is assumed that method in the source question (Q508, etc.) is coded in the same way as the code for V643.

Variable, Location	Description, Code	Source, Recoding Instructions
V643 (Cont.)		*Possible simplifications:* If "NA" in the relevant questions is read as zero, the above can be simplified as follows: (as before, the first three lines remain unchanged and are not repeated below) Core Questionnaire: V643 = Q508 + Q530 Fertility Regulation Module Card 8, col. 18 = 2: V643 = Q524 + Q532 + Q543 + Q546 Card 8, col. 18 = 5: V643 = Q582 + Q579
V644 (637-638)	*Use of any method in the open interval* 1 = currently using 2 = used earlier in the open interval 3 = did not use in the open interval 88 = no open interval	V643 = 88: 88 V643 = 0: 3 V643 = 1-15 or 99, V636 = 2 or 3: 1 V643 = 1-15 or 99, V636 = 1 or 88: 2
V645 (639-640)	*Pattern of contraceptive use* Core Questionnaire: 1 = never used, intends future use 2 = never used, does not intend future use or undecided 3 = never used, currently not fecund or not married 4 = last used in open interval 5 = last used earlier in some closed interval 6 = contraceptive sterilization (male or female) 7 = current user of method 88 = never married F.R. Module: 1-4 as above 5 = last used in the last closed interval 6 = last used in an earlier closed interval 7 = contraceptively sterilized 8 = current user of other method 88 = never married	Core Questionnaire: V103 = 1, V634 = 0, V403 = 1, Q523 = 1: 1 V103 = 1, V634 = 0, V403 = 1, Q523 ≠ 1: 2 V103 = 1, V634 = 0, V403 = 0: 3 V103 = 1, V634 = 1, V635 = 0 or 88, V644 = 2: 4 V103 = 1, V634 = 1, V635 = 0 or 88, V644 = 3 or 88: 5 V103 = 1, V634 = 1, V635 = 9 or 10: 6 V103 = 1, V634 = 1, V635 = 1-8, 11-15 99: 7 V103 = 0: 88 Fertility Regulation Module V103 = 1, V634 = 0, V403 = 1, Card 8, col. 18 = 1 (grey), Q517 = 1: 1 V103 = 1, V634 = 0, V403 = 1, Card 8, col. 18 = 1 (grey), Q517 ≠ 1: 2 V103 = 1, V634 = 0, V403 = 1, Card 8, col. 18 = 3 (green), Q551 = 1: 1 V103 = 1, V634 = 0, V403 = 1, Card 8, col. 18 = 3 (green), Q551 ≠ 1: 2 V103 = 1, V634 = 0, V403 = 0: 3 V103 = 1, V634 = 1, V635 = 0 or 88, V644 = 2: 4 V103 = 1, V634 = 1, V635 = 0 or 88, V644 = 3 or 88, V641 = 2 or 3: 5 V103 = 1, V634 = 1, V635 = 0 or 88, V644 = 3 or 88, V641 = 1 or 88: 6 V103 = 1, V634 = 1, V635 = 9 or 10: 7 V103 = 1, V634 = 1, V635 = 1-8, 11-15, 99: 8 V103 = 0: 88

Respondent's background (V701 to V713)†

Variable Location	Description, Code	Source, Recoding Instructions
V701 (641-642)	*Region of residence* (coded locally)	If Q102 = 2 then source is Q103 ELSE source is ID
V702 (643-644)	*Type of place of residence* (coded locally)	As above
V703 (645-646)	*Childhood type of place of residence* (coded locally)	Q105/Q106
V704 (647-648)	*Level of education* (completed years of education)	Q109/Q111
V705 (649-650)	*Literacy* 1 = can read 2 = cannot read 99 = NS	If Q113 / then NA → 1 1 → 1 2 → 2 9 → 99
V706 (651-652)	*Religion* (developed locally)	Q114
V707 (653-654)	*Ethnic group (etc.)* (developed locally)	Q115
V708 (655-656)	*Occupation before first marriage* 0 = did not work Coded locally, use a small number, say under 10, of categories suitable for tabulations.	If Q613 = 2 or 9 then 0 ELSE Q615 grouped.
V709 (657-658)	*Work status before marriage* A. employed by family member 1 = paid in cash 2 = paid in kind 3 = unpaid B. employed by someone else 4 = paid in cash 5 = paid in kind 6 = unpaid 7 = self-employed 8 = did not work before marriage 99 = NS (whether employed or self-employed)	Q616 = blank → 8 Q616 = 1, Q617 = 1 → 1 Q616 = 1, Q617 = 2 or 9 → 2 Q616 = 1, Q617 = 3 → 3 Q616 = 2, Q617 = 1 → 4 Q616 = 2, Q617 = 2 or 9 → 5 Q616 = 2, Q617 = 3 → 6 Q616 = 3 → 7 Q616 = 9 → 99
V710 (659-660)	*Most recent occupation after first marriage* 0 = has not worked Coded locally; use a small number, say under 10, of categories as for V708	If Q602 = 2 or 9 then 0 ELSE Q604

† In all-woman samples, V708 to V713 will require modification for never married women.

Variable, Location	Description, Code	Source, Recoding Instructions
V711 (661-662)	*Most recent work status after 1st marriage* 1 = worked on family farm A. employed by family member (but not on family farm) 2 = paid in cash 3 = paid in kind 4 = unpaid B. employed by someone else 5 = paid in cash 6 = paid in kind 7 = unpaid 8 = self-employed (but not on family farm) 9 = did not work after marriage 99 = NS (whether employed or self-employed)	Q605 = NA → 9 Q605 = 1, Q606 = 1 → 1 Q605 = 1, Q606 ≠ 1, Q609 = 1 → 5 Q605 = 1, Q606 ≠ 1, Q609 = 2 or 9 → 6 Q605 = 1, Q606 ≠ 1, Q609 = 3 → 7 Q605 = 2 or 9, Q608 = 1, Q609 = 1 → 2 Q605 = 2 or 9, Q608 = 1, Q609 = 2 or 9 → 3 Q605 = 2 or 9, Q608 = 1, Q609 = 3 → 4 Q605 = 2 or 9, Q608 = 2, Q609 = 1 → 5 Q605 = 2 or 9, Q608 = 2, Q609 = 2 or 9 → 6 Q605 = 2 or 9, Q608 = 2, Q609 = 3 → 7 Q605 = 2 or 9, Q608 = 3 → 8 Q605 = 2 or 9, Q608 = 9 → 99
V712 (663-664)	*Most recent place of work (since first marriage)* 1 = family farm 2 = other farming 3 = non-farming work at home 4 = non-farming work away from home 5 = did not work after marriage 99 = NS (whether farming or not)	Q605 = NA → 5 Q605 = 9 → 99 Q605 = 1, Q606 = 1 → 1 Q605 = 1, Q606 ≠ 1 → 2 Q605 = 2, Q607 = 1 → 3 Q605 = 2, Q607 ≠ 1 → 4
V713 (665-666)	*Pattern of work* A. currently working 1 = also worked before marriage 2 = did not work before marriage B. worked since marriage but not currently 3 = also worked before marriage 4 = did not work before marriage C. did not work after marriage 5 = worked before marriage 6 = never worked 99 = NS (whether currently working)	Q601 = 9 → 99 Q601 = 1, Q613 = 1 → 1 Q601 = 1, Q613 ≠ 1 → 2 Q601 = 2, Q602 = 1, Q613 = 1 → 3 Q601 = 2, Q602 = 1, Q613 ≠ 1 → 4 Q601 = 2, Q602 ≠ 1, Q613 = 1 → 5 Q601 = 2, Q602 ≠ 1, Q613 ≠ 1 → 6

† In all-woman samples, V708 to V713 will require modification for never married women.

Husband's background (V801 to V805)†

Variable, Location	Description, Code	Source, Recoding Instructions
V801 (667-668)	*Husband's childhood type of place of residence* (same code as V703)	Q708
V802 (669-670)	*Husband's level of education* (same code as V704)	Q703-Q705
V803 (671-672)	*Husband's literacy* 1 = can read 2 = cannot read 99 = NS	If Q707 then NA → 1 1 → 1 2 → 2 9 → 99
V804 (673-674)	*Husband's most recent occupation* 0 = never worked Coded locally; if possible use the same codes as V708, V710	Q709 grouped.
V805 (675-676)	*Husband's work status* A. employed by family member 1 = paid in cash 2 = paid in kind 3 = unpaid B. employed by someone else 4 = paid in cash 5 = paid in kind 6 = unpaid C. self-employed 7 = no employees 8 = 1-4 employees 9 = 5 or more employees 10 = never worked 99 = NS (whether employee or self-employed)	Q710 = NA → 10 Q710 = 1, Q711 = 1 → 1 Q710 = 1, Q711 = 2 or 9 → 2 Q710 = 1, Q711 = 3 → 3 Q710 = 2, Q711 = 1 → 4 Q710 = 2, Q711 = 2 or 9 → 5 Q710 = 2, Q711 = 3 → 6 Q710 = 3, Q712 = 2 or 9 → 7 Q710 = 3, Q712 = 1, Q713 < 5 or 99 → 8 Q710 = 3, Q712 = 1, Q713 = 5 to 98 → 9 Q710 = 9 → 99

†Variables V801-V805 will be coded 88 for never-married women

Characteristics of the interview (V901 to V907)

Variable, Location	Description, Code	Source, Recode Instructions
V901 (677-678)	*Identification number of the interviewer* (coded locally)	Card 21, cols. 17-18 (Core Questionnaire)
V902 (679-680)	*Length of the interview (minutes)* 0-87 + ,99 = NS	Card 21, cols. 19-21 (Core Questionnaire) (Note that V902 is a 2 digit field)
V903 (681-682)	*Number of visits* (1-4)	Card 21, col. 25 (Core Questionnaire)

Characteristics of the interview (V901 to V907 continued)

Variable, Location	Description, Code	Source, Recoding Instructions
V904 (683-684)	*Reliability of answers in Section 2* (1-3) 99 = NS	Q238
V905 (685-686)	*Presence of others during Section 2* (0-15) 99 = NS	Q239
V906 (687-688)	*Presence of others during Section 4* (0-15) 99 = NS	Q413
V907 (689-690)	*Degree of cooperation* (1-4) 99 = NS	Card 91, col. 48 (Core Questionnaire)

Additional Variables for Modules to the Core Questionnaire

Tape locations 691 onwards are used for additional variables where the country questionnaire includes questions in addition to the Core Questionnaire or where parts of the core questionnaire are not used in the basic set of First Country Report Tables. These are named S001, S002 etc. Some recommendations for additional variables that should normally at minimum be included are given below.

Recommended Additional Variables

	Original forms of dates before imputation	
S001	Respondent's birth date type 1 = year and month stated 2 = year only stated 3 = years ago stated 4 = age at event or at time of interview 5 = years since last event 9 = NS	
S002	First marriage date type (1-5) as for S001 8 = no marriage 9 = NS	
S003	First birth date type (1-5, 8, 9) as for S002	
S004	Penultimate birth date type (1-5, 8, 9) as for S002	
S005	Last birth date type (1-5, 8, 9) as for S002	

Recommended Additional Variables (continued)

	Other background variables	
S006	Partner's age 0-86 87 = 87 + 88 = no partner 99 = NS	Take from household member data if question not asked in individual questionnaire
S007	Respondent's education in single years 0-20 99 = NS	Q110/Q111
S008	Partner's education in single years 0-20 99 = NS	Q704/Q705
S009	Partner's occupation (full)	Q709 (Use full 2 or 3 digit code)
S010	Always lived here 1 = yes 0 = no	Q104
S011	Years worked before 1st union	Q614
S012	Years worked since 1st union	Q610
S013	Worked in 1st birth interval 1 = yes 0 = no	Q612
S014	Year last worked since 1st union (calendar year)	Q603
S015	Type of work before 1st union 1 = full time 2 = part time 3 = full time seasonal 4 = part time seasonal 8 = no work	
S016	Type of work after 1st union (1-4) as for S015	
S017	Duration of breast feeding after penultimate live-birth	Q225

Specification of Tables for Country Report No. 1

BLANK PAGE

Specification of Tables for Country Report Number 1

1. Tables Group 1-5

The tables for the 1st country report are specified in terms of table type and the five variables defining the base, panels, rows, columns and cells as described in Chapter 6. The table numbers refer to the WFS document *Guidelines for Country Report Number 1**.

The following points should be noted

a) Base

ALL indicates all women in the sample
EM indicates ever married women only

ALL = EM for surveys which excluded single women

When a variable is indicated, e.g. V108, only cases where this variable = 1 are included.

b) Panel, row, column

These are usually coded sequentially starting with 0 or 1.

c) Percentages and decimals

All percentages should be expressed to one decimal place unless otherwise indicated.

d) Means and decimals

Means should be expressed to three significant digits. That is for variables like age, the mean should be given with one decimal but for 'children ever born' two decimals should be given.

Where the software being used (e.g. COCENTS) does not allow for two decimal places, then means should be calculated on a per hundred basis with no decimals e.g. number of children born per 100 women.

e) Ratios

Ratios should be expressed as percentages with one decimal place. e.g. the proportion of children that are male born to women in a certain age group might be 0.532 but should be expressed as 53.2%.

f) Not applicable, not stated codes

Not applicable cases are always excluded from all tables. This is automatically taken care of through correct specification of the table base.

Not stated cases are usually counted and the marginals given but are not included in the calculation of percentages and means.

**The tabulation plan used here is the most recent available (WFS/TECH. 573, April 1977) except for the following minor corrections:*

(i) In Table 1.4.2 the row variable is changed to years since first marriage in 5 year groups (rather than current age)

(ii) Table 2.4.3 may be repeated (as 2.4.3b) replacing age by 5 year groups of marriage duration as the row variable.

(iii) Tables 3.1.2 and 3.2.4: rows are 5 year groups by year since marriage (rather than 10 year groups).

(iv) Tables 3.1.4-3.1.5: columns are "No. of living children at the beginning of the last closed interval" and the base population is all ever-married *women with at least one birth or current pregnancy.*

(v) *Table 4.1.6: when the Fertility Regulation Module is used, the panels are replaced by use/no-use of contraception in the* last closed interval.

(vi) *In tables involving a background variable we have always taken that to be the variable defining rows, rather than columns. This facilitates presentation of tables in the Country Report No.1 since tables differing only by the background variable involved can be placed one below the other.*

(vii) *An extra panel for "undecided" (about desire for last pregnancy) is added in Table 5.2.5.*

(viii) *All METR tables may show row standard deviation in addition to the mean of not mentioned explicitly in the Guidelines for the Country Report.*

GROUP 1: NUPTIALITY AND EXPOSURE TO CHILDBEARING

Table	Type	Base	Panel	Row	Column	Cell	No. of decimals for means
1.1.1	METR	ALL	—	V011	V110	V109 +0.5	1
1.1.2	FREQ	ALL	—	V109	V009	—	—
1.1.3	MEAN	V113	—	BACK	V011	V109 +0.5	1
1.2.1	CATG	EM	V112	V117	V104	—	—
1.2.2	PERC	EM	—	BACK	V117	V105	—
1.3.1	METR	EM	V112	V117	V102	V101	2
1.3.2	PERC	V105	—	BACK	V117	V106	—
1.4.1	RATI	EM	—	V011	V111	V114, V115	—
1.4.2	RATI	EM	V112	BACK	V011	V114, V115	—
1.5.1	CATG	EM	V112	V117	V107	—	—
1.5.2	PERC	EM	V112	BACK	V117	V108	1
1.6.1	CATG	EM	V112	V117	V402	—	—
1.6.2	CATG	EM	V012	V215	V402	—	—
1.6.3	CATG	EM	V012	BACK	V402	—	—

Table	Comments
1.1.1	0.5 is added to V109 (age in *completed* years) in order to give the mean expressed as *exact* years.
1.1.3	"BACK" means background variable. Any table with "BACK" is repeated for each background variable applicable to the table (the title is modified accordingly). Unless additional variables are also specified, "BACK" includes variables in a "standard set" (specific to each country). Additional background variables for 1.1.3: V703, V708, V709.
1.2.1	Gives subtotals for V104 = "2" to "4".
1.4.1,2	A "ratio" is *always* given as a percent figure (i.e., after multiplication by 100).
1.5.1	Gives subtotals for V107 = "2" to "4".

GROUP 2: FERTILITY

Table	Type	Base	Panel	Row	Column	Cell	No. of decimals for means
2.1.1	METR	V121	V119	V110	V229	V228	1
2.1.2	MEAN	V121	V119	BACK	V110	V223	2
2.2.1a	METR	V108	—	V011	V208	V208; V212/V208	2
2.2.1b*	METR	EM	—	V011	V208	"	2
2.2.2a	METR	V108	—	V117	V208	"	2
2.2.2b	METR	EM	—	V117	V208	"	2
2.2.3a	MEAN	V108	—	V117	V110	V208	2
2.2.3b	MEAN	EM	—	V117	V110	V208	2
2.2.4a	MEAN	V108	—	V01'	V110	V208	2
2.2.4b	MEAN	EM	—	V011	V110	V208	2
2.2.5**	METR	EM	V117	BACK	V209	V208	2
2.2.6	MEAN	ALL	V012	BACK	V110	V208	2
2.2.7**	MEAN	EM	V120	BACK1	BACK2	V208	2
2.3.1a	METR	V108	—	V011	V214	V213	2
2.3.1b*	METR	EM	—	V011	V214	V213	2
2.3.2a	METR	V108	—	V117	V214	V213	2
2.3.2b	METR	EM	—	V117	V214	V213	2
2.3.3	METR	ALL	V012	V209	V214	V213	2
2.3.4	MEAN	ALL	—	V010	—	V213, V208	2
2.3.5†	—	ALL	—	—	—	—	—
2.4.1.	MEAN	V123	—	V011	V227	V225	2
2.4.2	MEAN	V123	—	V011	V110	V225	2
2.4.3a	MEAN	V123	—	BACK	V011	V225	2
2.4.3b	MEAN	V123	—	BACK	V117	V225	2
2.4.4	RATI	V123	—	V011	V110	V226, V225	2
2.4.5	PERC	V108	—	V011	V214	V206	—
2.4.6	PERC	V108	—	V011	V110	V206	—

* *For "-woman" samples, repeat with base = "ALL", as tables 2.2.1c and 2.3.1c.*

** *For "All-woman" samples, tables 2.2.5 and 2.2.7 may be repeated (optionally) with base = "ALL"; and Panel = V011 for table 2.2.5 and Panel = V012 for 2.2.7.*

† "special table"; see children's tables.

Notes Group 2:

Table(s)	Comments
2.1.1	Panel V119 = 1 does not appear. For the mean column include only cases with V228 = 0 to 59 (i.e., V229 = 02 to 07). However, for calculation of the row percentage all codes (except, as usual, 'not stated') are included.
2.1.2	Panel V119 = 1 does not appear. Additional background variables are as for Table 1.1.3.

2.2.1 For columns, V208 is ungrouped. Two additional columns, one for 'MEAN' and the other for 'percent male' are included. The last mentioned column is similar to the marginal column of a RATI table.

2.2.2-2.2.3 The column variable is ungrouped, i.e.., the full distribution is shown.

2.3.4 Also show a column giving the difference of means (V208-V213). The row variable is ungrouped.

2.3.5 This is a special table, giving frequencies (number of children). The 'unit' is the child, not the women as in other tables. See Section 4: Birth History (Children's Tables).

2.4.1, 2.4.2, 2.4.3 Codes V227 > '09' are shown as a single column. Row 'stubs' also show [(V011)-5], in addition to V011.

2.4.4 Row 'stubs' as 2.4.2. For programming, tables 2.4.2 and 2.4.4 may be combined as a RATI TABLE (in fact 2.4.4 covers 2.4.2).

GROUP 3: PREFERENCES FOR NUMBER AND SEX OF CHILDREN

Table	Type	Base	Panel	Row	Column	Cell	No. of decimals for means
3.1.1	PERC	V403	—	V011	V219	V502	—
3.1.2	"	"	—	V117	"	"	—
3.1.3	"	"	V012	BACK	"	"	—
3.1.4(FR)	"	V234	—	V011	"	V506	—
3.1.5(FR)	"	"	—	V117	"	"	—
3.2.1	METR	V403	—	V011	V510	V509	2
3.2.2	"	"	—	V117	"	"	2
3.2.3	MEAN	"	—	V011	V219	"	2
3.2.4	"	"	—	V117	"	"	2
3.2.5	"	"	V012	BACK	"	"	2
3.3.1a	METR	V108	—	V011	V512	V511	2
3.3.1b*	"	EM	—	"	"	"	2
3.3.2a	"	V108	—	V117	"	"	2
3.3.2b	"	EM	—	"	"	"	2
3.3.3a	"	V108	—	V213	V511	"	2
3.3.3b*	"	EM	—	"	"	"	2
3.3.4a	MEAN	V108	—	V011	V219	"	2
3.3.4b	"	EM	—	"	"	"	2
3.3.5a	"	V108	—	V117	"	"	2
3.3.5b	"	EM	—	"	"	"	2
3.3.6	"	V108	V111	V118	"	"	2
3.3.7*	"	V108	V012	BACK	"	"	2
3.4.1	PERC	V404	V012	V222	V221	V503	—
3.4.2	"	"	V119	"	"	"	—
3.4.3a	"	V504	V012	"	"	V507	—
3.4.3b	"	"	V012	"	"	V508	—
3.4.4a	"	"	V119	"	"	V507	—
3.4.4b	"	"	V119	"	"	V508	—
3.4.5	MEAN	V404	V012	"	"	V509	2
3.4.6a	"	V406	V012	"	"	V511	2
3.4.6b*	"	V407	V012	"	"	"	2

* *For "ALL-women" samples, repeat with base = "ALL" as tables 3.3.1c, 3.3.3c, 3.3.4c, 3.3.7 (optionally) and 3.4.6c;*

Notes Group 3:

Tables	Comments
3.1.4-3.1.5	These are relevant only when the F.R. Module is used. Column headings are [(V219)-1] = 0,1, . . . ,8+.
3.2.1-3.2.5, and 3.4.5	Exclude "non-numeric answers" (V509 = 98) from the mean of V509.
	When the F.R. Module is used, include V509 = "66" as -1 in calculating the mean; in this case an additional column V510 = 66 (with heading "-1") also appears in the table as the first column.
3.3.1-3.3.7, and 3.4.6	Exclude non-numeric codes [(V510)>5] in computing the mean of V511.
3.3.3	The row and the column variables are ungrouped, i.e., the full distribution is shown.

GROUP 4: KNOWLEDGE AND USE OF CONTRACEPTION

Table	Type	Base	Panel	Row	Column	Cell	No. of decimals for means
4.1.1	METR	V235	—	V012	V303	V302	1
4.1.2	"	"	—	V210	"	"	1
4.1.3	"	V306	—	V012	V304	"	1
4.1.4	"	"	—	V210	"	"	1
4.1.5	"	"	V211	BACK	"	"	1
4.1.6(CORE)	MEAN	V236	V634	V012	V305	V230	1
4.1.6(FR)	"	"	V642	"	"	"	1
4.2.1a	CATG	EM	V218	V011	V616; V601 to V615	—	—
4.2.1b*	CATG	V403	"	"	"	—	—
4.2.2	PERC	ALL	V012	BACK	V214	V617	—
4.3.1a	CATG	EM	V218	V011	V633; V618 to V632	—	—
4.3.1b*	CATG	V403	"	"	"	—	—
4.3.2	PERC	ALL	V012	BACK	V214	V634	—
4.4.1	CATG	V404	V012	V216	V636; V635	—	—
4.4.2	PERC	"	—	V011	V214	V637	—
4.4.3	"	"	V012	V222	V221	"	—
4.4.4	"	"	V120	"	"	"	—
4.4.5	"	"	V012	BACK	V214	"	—
4.5.1	CATG	EM	—	V011	V645	—	—
4.5.2	"	"	V111	V118	"	—	—
4.5.3	"	"	—	V214	"	—	—
4.5.4	"	"	V012	V402	"	—	—
4.5.5	"	"	V012	BACK	"	—	—
4.5.6	"	"	V217	"	"	—	—
4.6.1	METR	V405	V012	V644	V233	V232	1
4.6.2(FR)	"	V235	V012	V642	V231	V230	1

* *For All-women samples, repeat with base = "ALL", as tables 4.2.1c and 4.3.1c*

Notes Group 4:

Table(s)	Comments
4.1.1, 4.1.2, 4.1.3	For computing row means, recode V302 = "98" as 0. For F. R. Module, add panels V642 = 1 and V642 = 2. The row mean includes codes V304 = 1 to 11; the value used is, as usual, the ungrouped variable V302, with code "98" recoded as 0.
4.1.4	Row mean as for Table 4.1.3.

Group 4: Knowledge and use of contraception (continued)

4.1.5 Row mean as for Table 4.1.3.

4.1.6 For the Core Questionnaire, the two panels are V634 = 0 and V634 = 1.

For the F.R. Module, the two panels are V642 = 1 and V642 = 2.

4.2.1 The table consists of two parts. For part (ii) percentages for each of the 15 variables are calculated. The denominators for these cell-percents are the same as the denominator for row percentage in part (i).

4.3.1 Two parts as for 4.2.1.

4.4.1 The two column variables represent two parts of the table; the first part being simply subtotals for certain columns of the second part.

4.6.2 Relevant only for the F.R. Module.

GROUP 5: THE USE OF CONTRACEPTION AS RELATED TO FERTILITY

Table	Type	Base	Panel	Row	Column	Cell	No. of decimals for means
5.1.1	CATG	V403	V501	V011	V616	—	—
5.1.2	"	"	V513	"	"	—	—
5.2.1	"	V404	V501	V216	V635 } V636	—	—
5.2.2a	PERC	V503	—	V117	V111	V638	1
5.2.2b	"	V404	—	"	"	V639	1
5.2.3a	"	V503	—	V011	V214	V638	1
5.2.3b	"	V404	—	"	"	V639	1
5.2.4a	"	V503	—	BACK	V012	V638	1
5.2.4b	"	V404	—	BACK	"	V639	1
5.2.5(FR)	CATG	V234	V505	V219	V641 } V640	—	—
5.3.1	"	V403	V012	V501	V645	—	—
5.3.2	"	"	"	V513	"	—	—
5.3.3	"	"	V012× } BACK	V501	"	—	—

Notes Group 5:

Tables(s)

Comments

5.2.1 Two column variables for two parts of the table, as for Table 4.4.1.

5.2.5 Relevant only for the F.R. Module.

Two column variables for two parts of the table, as for Table 4.4.1. Four rows are defined as [(V219)-1] ⩽ 2,3,4 and 5 + .

5.3.1-5.3.3 Category V645 = 3 does not appear in Tables 5.3.1-5.3.3, since the tables are confined to currently married fecund women.

5.3.3 This is the only table using two panel variables simultaneously: categories of a background variable appearing within age panels.

2. Additional Tables From Fertility Regulation Module

The small number of additional tables involved when this module is used, (tables 3.1.4, 3.1.5, 4.6.2 and 5.2.5; see *Guidelines for the Country Report No. 1,* Appendix I) have already been described above.

3. Household Schedule Tables

These tables are as in *Guidelines for Country Report No. 1,* Appendix II. In many countries the household schedule is not used, and only a small subset of these tables is relevant (say Tables 11.1-11.4, 11.12, 11.13). It should be noted that all tables should be confined only to the *de facto* ("slept last night") or to the *de jure* ("live usually") persons listed, whichever criterion was used in the selection of women for the *individual* interview. However, Table 11.1 should be repeated for each of the two coverage definitions separately.

4. Birth History (Children's Tables)

For most of these tables (see *Guidelines for Country Report No. 1,* Appendix III), each child, rather than the mother (individual respondent) is the unit of analysis*. For ease of tabulations a working "Children's file" is created containing one record for each live birth. Since the number of women in each group is also quoted in the tables, each childless woman is represented by a special child record with birth order set equal to zero.

---

* *Table 2.3.5 may be conveniently added to the set, since for that also the unit of analysis is the child. The same will apply if additional tables on infant and child mortality are to be included. On the other hand, Table III.1 is more like the main set of tables described in Section 1: Tables Group 1-5.*

Detailed notes for construction of Table III.1 are available in the Guidelines for the Country Report No. 1, *Appendix III.*

Layout Of Child Work File

Variable	Location	Description
C01	01 - 16	Identification (same as V001)
C02	17 - 18	Birth order. Births are numbered sequentially starting with "01". Multiple births, sets of twins or triplets etc., are given the *same* birth order. For the first birth, C02 is 01; for each subsequent birth C02 is increased by 1 only if variable B1(j) for the birth is = 1. For a record corresponding to a woman with no live births, C02 = 0.
C03	19	Order within a multiple birth. For a single birth, C03 = 1. For twins, C03 = 1 for the first twin, and = 2 for the second. Similarly for triplets C03 = 1, 2 and 3 respectively for the three births. For any birth j, C03 = B1(j) as defined earlier. Fields C01 to C03 provide unique identification for a record. For a record corresponding to a childless woman, C03 = 0.
C04	20 - 21	Domain number, V002.
C05	22 - 25	Stratum number, V003.
C06	26 - 29	PSU number, V004.
C07	30 - 33	UAU number, V005.
C08	34-37	Sample weight, V006.
C09	38 - 41	Date of interview (century month), V007.
C10	42 - 45	Mother's (woman's) date of birth, V008.
C11	46 - 47	Year of birth of mother (woman), V009.
C12	48 - 51	Mother's (woman's) date of first marriage, M2(1) defined in the marriage history. For a childless woman, the rest of the fields (C13 to C21) are NA.
C13	52 - 55	Date of child's birth. For the jth birth, C12 = B2(j).
C14	56	Sex of child 1 = boy, 2 = girl, 8 = NA.
C15	57 - 58	Age at death; completed years C15 = B4(j).
C16	59 - 60	Age at death; completed months C16 = B5(j).
C17	61 - 62	Year of birth of the child (C13-1)/12 (integral part).

Layout of Child Work File (continued)

Variable	Location	Description
C18	63 - 64	Age at death, grouped as follows:

IF		THEN C18 =	Description of Code
C15 = 0	C16 = 0	1	>1 month (completed)
	C16 = 1-2	2	1-2 months
	C16 = 3-5	3	3-5 months
	C16 = 6-11	4	6-11 months
	C16 = 99	5	1 year, months NS
C15 = 1		7	1 completed year
C15 = 2-4		8	2-4 completed years
C15 = 5-40		9	5 or more completed years
C15 = 99		10	NS
C15 = 88	C02>0	98	Child still alive
	C02 = 0	88	NA (no birth)

C19	65 - 66	Age of mother at birth of the child (C13-C10-R)/12 (integral part). R equals 0 or 1 at random.
C20	67 - 68	Age of mother at beginning of the year of birth of the child, (12*C17-C10)1/12 (integral part).
C21	69 - 70	Union status of woman at birth of child.

Other background variables may be added here if needed for special tables.

Table specifications:

Table 2.3.5 and the tables in Appendix III of the WFS *Guidelines for the Country Report No. 1* are all simple FREQUENCY tables. There are no panels involved; rows, columns and the base populations are defined as follows:

Table	Rows	Columns	Base population to be included
III.2	C19	C17	C02>0
III.3	C20	C17	C18 = 98
III.4	C20	C17	C02>0
III.5	C19	C11	C02 = 1 and C03 = 1
III.6	C19	C11	C02>0
2.3.5	C17**	C18*	C17> (year of interview − 7)

Note: year of interview = (C09-1)/12

* *Columns of the table are as follows:*
Cols. 1-5, 7-10, 12 corresponding respectively to codes 1-5, 7-10, 98 of C18.
Col. 6 = subtotal for codes 1-5; col. 11 = subtotal for codes 1-5, and 7-10.
Col. 13 = total number of children.

** *The seven rows are the year of the interview and the six immediately preceding calendar years.*

5. Additional Tables for All-Woman Samples

These are described in WFS *Guidelines for the Country Report No. 1,* Appendix IV, and are briefly:

(i) Tables 2.2.1, 2.3.1, 3.3.1, 3.3.3, 3.3.4, 3.3.7 (optionally), 3.4.6, 4.2.1, and 4.3.1 are *repeated* with Base = 'ALL'.

(ii) If there is a great deal of fertility outside of unions, Tables 2.2.5 and 2.2.7 may be repeated for all women, with age panels replacing the panels according to marital duration.

(iii) Specific changes in Tables 1.1.1, 2.4.6, 4.2.2. and 4.3.2, as given in *Guidelines for the Country Report No. 1,* Appendix IV.

(iv) The only additional table is Table 1.1.4:

Table	Type	Base	Panel	Row	Column	Cell
1.1.4	MEDIAN	ALL	—	BACK	V011	V109

The cell entry is the age (to 0.1 of a year) which is ⩾V109 for 50% of the cases in the cell.

6. Additional Tables for Weighted Data

If the software being used allows, all tables should show both the weighted and unweighted frequencies in the same cell. Otherwise show weighted frequencies only for the main tabulations and produce an unweighted set of frequencies repeated for each 'base' variable for the row and column variables specified below:

Base : V103, V108 (possibly), V403, V404, V503 (possibly), V123, V121.

Row : Standard set of Background variables.

Column : V117 (with V112 as panels), V214 (with V102 as panels), V110 (possibly).

Unweighted tables of each background variable against each other should also be produced.

BLANK PAGE

Specifications For Sampling Errors

BLANK PAGE

SPECIFICATIONS FOR SAMPLING ERRORS

1. ESTIMATES FOR WHICH SAMPLING ERRORS ARE REQUIRED

Estimate	Type of estimate	Variable Number for estimate	Range		Base	Variable number and range for base if necessary.
			Included	Excluded		
1. % currently married CURM	Proportion (%)	V108	0,1	>1	All women	---
2. % exposed EXPD	Proportion (%)	V404	0,1	>1	Ever married	V103 = 1
3. % first marriages dissolved MDIS	Proportion (%)	V105	0,1	>1	Ever married	---
4. % remarried REMA	Proportion (%)	V106	0,1	>1	First marriage dissolved	---
5. No. of marriages NMAR	Mean	V101	1-8	0,>8	Ever married	---
6. Age at first marriage AGEM	Mean	V109	10-24	<10, >24	Age 25-49	V010 =25-49
7. % time spent in married state DURM	Ratio	V114, V115	0-500	>500	Months since first marriage 0-500	---
8. % currently pregnant CURP	Proportion (%)	V108	0,1	>1	Currently married	V108 = 1
9. Children ever born NCEB	Mean	V208	0-24	>24	All women	---
10. No. of living children NULC	Mean	V213	0-24	>24	All women	---
11. Births in 1st 5 years of marriage NCB5	Mean	V223	0-8	>8	Married at least 5 years	---
12. Births in past 5 years NCL5	Mean	V225	0-8	>8	Married continuously for last 5 years	---
13. First birth interval FBIN	Mean	V228	0-59	>59	Ever married with at least 1 fertile pregnancy	V123 = 1
14. Last closed interval LBIN	Mean	V230	6-59	<6 or >59	Ever married, 2+ fertile pregnancies, closed interval< 5 years	V236 = 1
15. Open birth interval OBIN	Mean	V232	0-500	> 500	Exposed with 1 + live birth (excluding sterilized)	V405 = 1
16. Months breast fed in closed interval (1) BFLI	Mean	V302	0-76 with 98 recoded as 0	77-97,99	Ever married, 2+ fertile pregnancies	V235 = 1

1. Estimates for which Sampling Errors are required (continued)

Estimate	Type of estimate	Variable Number for estimate	Range		Base	Variable number and range for base if necessary.
			Included	Excluded		
17. Months breast fed in last closed interval (2) (including only first 24 months) BFL2	Mean	V302	0-24 with 98 recoded as 0	25-97,99	Ever married, 2+ fertile pregnancies, closed interval >32, child survived ⩾24 months, half those breast feeding exactly 24 months	V235 = 1 and V306 = 1, and V304 = 1-11
18. % children who have died DEAD	Ratio	V208-V213	0-24	>24	All women	---
19. % women not wanting last child LCND	Proportion (%)	V506	0,1	>6	Ever married, 1+ fertile pregnancies	V234 = 1
20. % wanting no more children NMCD	Proportion (%)	V502	0,1	>1	Currently married, fertile	V504 = 1
21. % preferring a boy PREB	Proportion (%)	V507	0,1	>1	Exposed & wants another child and has sex preference	V505 = 1
22. % desiring fewer than number living FECD	Proportion (%)	V513	1-3	>3	Ever married (excluding undecided on no. children desired).	---
23. Additional no. children wanted NACD	Mean	V509	0-21 with 66 recoded as -1	22-65, >66	Currently married, fecund	V403 = 1
24. Total no. children desired NTCD	Mean	V511	0-21	>21	Currently married	V108 = 1
25. % knowing pill KPIL (and similarly for other important methods)	Proportion (%)	V601	0-2	>2	All women who were asked knowledge questions	---
26. % knowing any method KANY	Proportion (%)	V617	0-1	>1	All women who were asked knowledge questions	---
27. % knowing efficient method KEFF	Proportion (%)	V616	1-3	0,>3	All women who were asked knowledge questions	---

1. Estimates for which Sampling Errors are required (continued)

Estimate	Type of estimate	Variable Number for estimate	Range		Base	Variable number and range for base if necessary.
			Included	Excluded		
28. % ever using pill UPIL (and similarly for other important methods)	Proportion (%)	V618	0-1	>1	All women who were asked use questions	---
29. % using any method UANY	Proportion (%)	V634	0-1	>1	All women who were asked use questions	---
30. % using efficient methods UEFF	Proportion (%)	V633	1-3	0,>3	All women who were asked use questions	---
31. % used method in open interval UOIN	Proportion (%)	V644	1-3	0, >3	Exposed with 1 + live births (excluding sterilized)	V405 = 1
32. % used method in closed interval UCIN	Proportion (%)	V642	1,2	0, >2	Ever married with 2 + fertile pregnancies	V235 = 1
33. % currently using method UCUR	Proportion (%)	V637	0-1	>1	Exposed	V404 = 1
34. % currently using efficient method (1) UCE1	Proportion (%)	V638	0-1	>1	Exposed	V404 = 1
35. % currently using efficient method (2) UCE2	Proportion (%)	V639	0-1	>1	Exposed and wanting no more children	V503 = 1

2. SUB-CLASS PAIRS OVER WHICH SAMPLING ERRORS ARE TO BE COMPUTED

Variable		Ranges for Sub-class pairs
Current age	(V010)	<25, 25-34; 35-44, 45-49
Years since first marriage	(V116)	<5,5-9; 10-19, 20+
Age at first marriage	(V109)	<20, 20+
Children ever born	(V208)	<4,4+
Type of place of residence	(V702)	1, 2
Level of Education	(V704)	0, 1-4; 5-8, 9+
Literacy	(V705)	1, 2
Religion	(V706)	1, 2; 3,4
Husband's Occupation	(V804)	0, 1; 2, 3; 4, 5; 6, 7; 8, 9

Computations to be repeated for each domain defined by the domain variable (V002)

3. VARIABLES REQUIRED FROM STANDARD RECODE DATA FILE

Name	Number	Sequence	Location
Domain number	V002	1	17-18
Stratum number	V003	2	19-22
PSU number	V004	3	23-26
UAU number	V005	4	27-30
Sample weight	V006	5	31-34
Current age	V010	6	45-46
Age in 10 year groups	V012	7	49-50
Number of times married	V101	8	131-132
Whether ever-married	V103	9	135-136
Whether 1st marriage dissolved	V105	10	139-140
Whether remarried	V106	11	141-142
Whether currently married	V108	12	145-146
Age at 1st marriage (AFM)	V109	13	147-148
Months spent in marital state since first marriage	V114	14	157-160
Months since first marriage	V115	15	161-164
Years since first marriage (YSFM)	V116	16	165-166
Whether first married at least 5 years ago	V121	17	175-175
Whether married continuously for past 5 years	V123	18	179-180
Whether currently pregnant	V206	19	431-432
Number of children ever born (CEB)	V208	20	435-436
Number of living children (NLC)	V213	21	445-446
Children born in first 5 years of marriage	V223	22	465-466
Children born in past 5 years	V225	23	469-470

3. Variables required from Standard Recode Data File (continued)

Name	Number	Sequence	Location
First birth interval (months)	V228	24	475-478
Last closed interval (months)	V230	25	481-484
Open birth interval (months)	V232	26	487-490
Whether ever-married with 1+ fertile pregnancies (including current)	V234	27	493-494
Whether ever-married with 2+ fertile pregnancies (including current)	V235	28	495-496
Whether closed interval < 5 years	V236	29	497-498
Breast-feeding in last closed interval	V302	30	501-502
Breast-feeding in last closed interval grouping 2	V304	31	505-506
Whether closed interval > 32 and child survived > 23 months	V306	32	509-510
Whether currently married and fecund	V403	33	515-516
Whether exposed (or currently married, fecund, non-pregnant)	V404	34	517-518
Whether exposed, not sterilized, 1+ births	V405	35	519-520
Currently married, fecund, wants no more children	V502	36	527-528
Whether exposed and wants no more	V503	37	529-530
Whether exposed and wants another child	V504	38	531-532
Whether last pregnancy unwanted	V506	39	535-536
Whether prefers next child to be a boy	V507	40	537-538
Number of additional children wanted	V509	41	541-542
Number of children desired (NCD)	V511	42	545-546
NCD minus (number alive + current pregnancy)	V513	43	549-550
Whether know PILL	V601	44	551-552
Whether knows IUD	V602	45	553-554
Knowledge of any method	V616	46	581-582
Whether knows any method	V617	47	583-584
Ever used PILL	V618	48	585-586
Ever used IUD	V619	49	587-588
Ever use of any method	V633	50	615-616
Whether ever used any method	V634	51	617-618
Whether currently using any method	V637	52	623-624
Whether currently using an efficient method	V638	53	625-626
Whether currently using an efficient method and wants no more children	V639	54	627-628
Use of any method in the closed interval-2	V624	55	633-634
Use of any method in the open interval	V644	56	637-638
Region of residence	V701	57	641-642
Type of place of residence	V702	58	643-644
Level of education (completed years)	V704	59	647-648
Literacy	V705	60	649-650
Religion	V706	61	651-652
Ethnic group	V707	62	653-654
Husband's most recent occupation	V804	63	673-674

BLANK PAGE

Appendix II

DP Manual for Processing Data from the WFS Core Questionnaire

4. Programming Specifications

LIST
FORMAT*
SUPDATE*, UPDATE*
SEPARATE
STRUCT*
STRUCT2
STRUCT3
STRUCT4
MARGINALS*
RANGE, CONSIS, HHCONS
EXTRACT
DEIR*
RECODE
MERGE
COGGEN* AND COCENTS
CLUSTERS*
*Program available from WFS headquarters.

BLANK PAGE

Program Specification

Program	LIST
Purpose	List cards from the survey with a double space between each household and starting each cluster on a new page. Print totals of numbers of households per cluster.

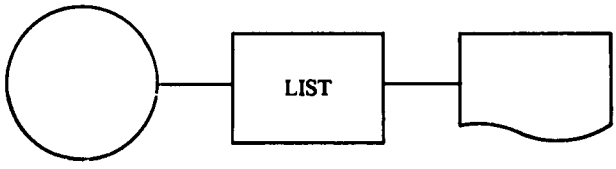

Input	File of survey data, uncleaned (i.e. may contain non-numeric characters) Cluster number — columns 3-5 Household — columns 6-9
Output	A listing for each new cluster of the form:

```
                Cluster: xxx
Sequence        Card contents
xxxxx           xxxxxxxx . . .
xxxxx           xxxxxxxx . . .      } household 1
xxxxx           xxxxxxxx . . .

xxxxx           xxxxxxx . . .
xxxxx           xxxxxxx . . .       } household 2
xxxxx           xxxxxxx . . .

xx xxx          xxxxxx
                Number of households in cluster: xxxx
```

Program Specification

Program — FORMAT

Purpose — To check the format of all survey data viz:

(i) only valid card types present

(ii) only numerics or blanks in all columns

(iii) all columns beyond a specified one for each card type are blank (to check for off-punching)

(iv) Cluster household and line number are within specified ranges.

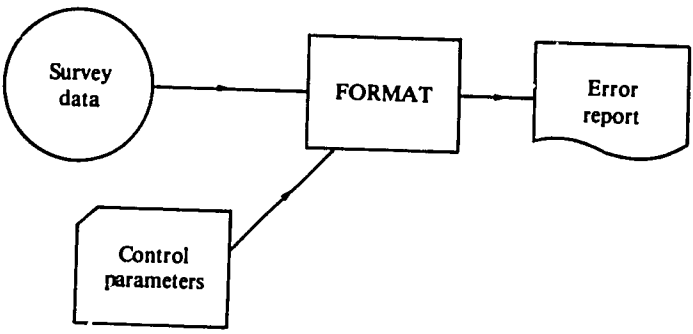

Input

1. File of Survey data, unsorted
2. Control parameters specifying
   a) ranges of cluster, household, line numbers
   b) valid card types and their last column used

Output

1. Errors giving one of the messages below with a listing of the card in error and its sequence number in the file:

   RECORD xxxxx NON NUMERIC CHARACTERS
   RECORD xxxxx PUNCHING BEYOND LAST ALLOWED COLUMN
   RECORD xxxxx INVALID CARD TYPE
   RECORD xxxxx CLUSTER OUT OF RANGE
   RECORD xxxxx HH OUT OF RANGE
   RECORD xxxxx LINE NUMBER OUT OF RANGE

Processing — A flowchart is given overleaf

FORMAT

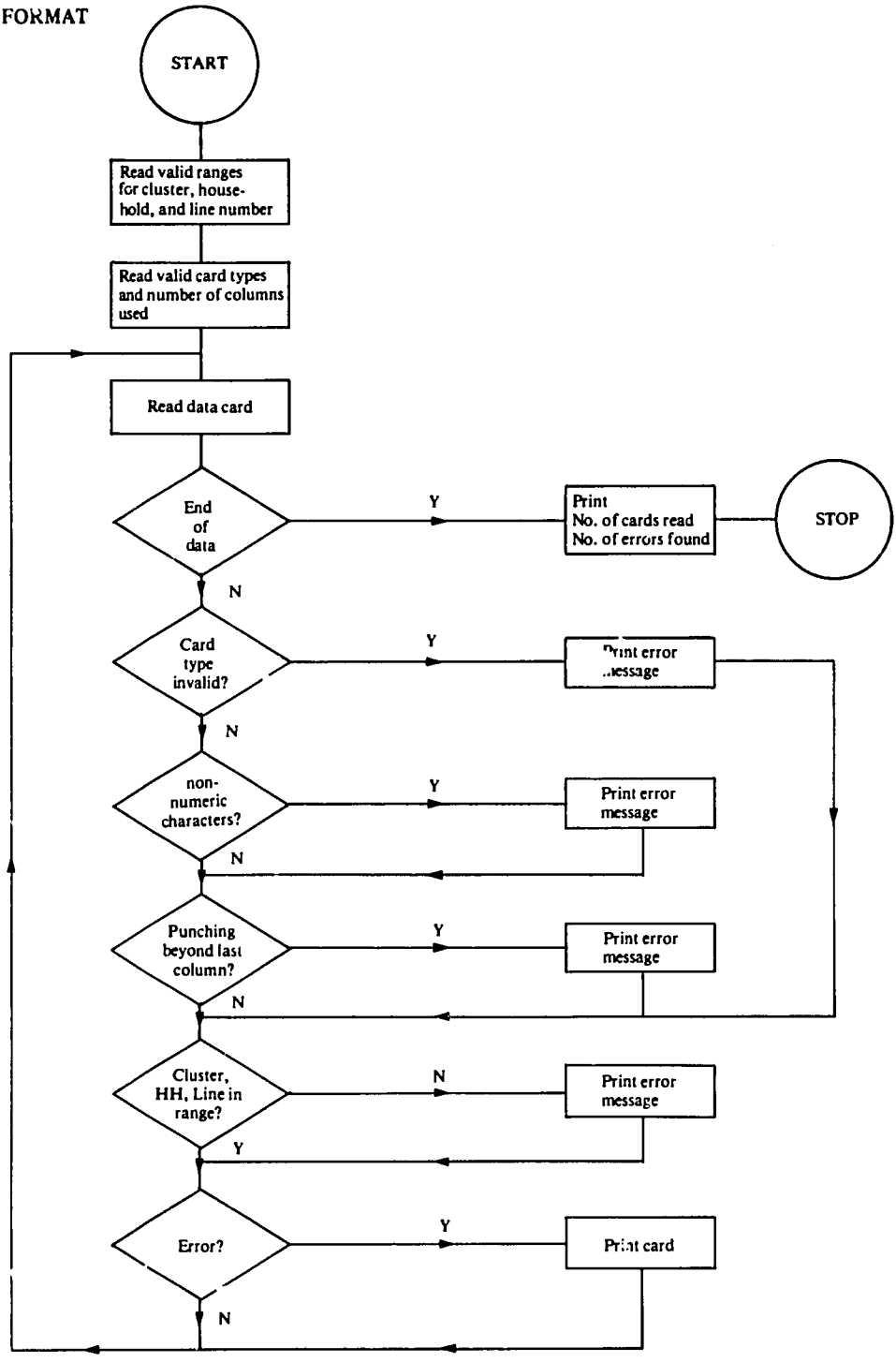
START
Read valid ranges for cluster, household, and line number
Read valid card types and number of columns used
Read data card
End of data
Y
Print No. of cards read No. of errors found
STOP
N
Card type invalid?
Y
Print error message
N
non-numeric characters?
Y
Print error message
N
Punching beyond last column?
Y
Print error message
N
Cluster, HH, Line in range?
N
Print error message
Y
Error?
Y
Print card
N

Program Specification

Programs — SUPDATE, UPDATE

Purpose — Update a file using a file of transactions

For SUPDATE, records in the file are identified by their sequential position in the file.

For UPDATE, records are identified by the value in pre-specified identification fields.

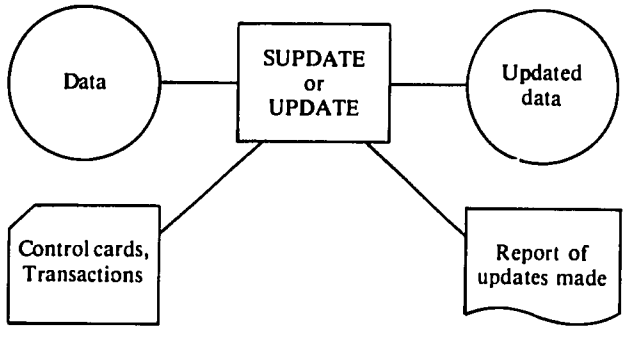

Input

1. File of card image data. For UPDATE, this must be sorted in order by identification.
2. Control cards giving the location of the questionnaire identification, the card type and the transaction code.
3. Transaction cards for deleting, inserting, replacing records and for changing fields in a record.

Output

1. The updated file
2. A report on the updates made

Processing — Programs UPDATE and SUPDATE (written in COBOL) are available from the WFS headquarters.

WFS UPDATE FORM

CT = card type
ID = questionnaire identification

Coder's Name
File Name

UC = update code:
1 single record deletion
2 multiple record deletion (must always appear in pairs)
3 replacement
4 insertion
5 field update (use - for blank)

CT: columns 1–2 | ID: columns 3–10 | columns 11–79 | UC: column 80

1 2 3 4 5 6 7 8 9 10 11 12 13 14 15 16 17 18 19 20 21 22 23 24 25 26 27 28 29 30 31 32 33 34 35 36 37 38 39 40 41 42 43 44 45 46 47 48 49 50 51 52 53 54 55 56 57 58 59 60 61 62 63 64 65 66 67 68 69 70 71 72 73 74 75 76 77 78 79 80

WFS
SUPDATE FORM

SN1 = sequence number of record to be updated

SN2 = sequence number of last card to be deleted (multiple deletes)

Coder's Name

File Name

UC = update code:
*DEL delete
*ADD add records after SN1
*REP replace fields
*ALL replace fields in all records in a file
*ADD, *REP, and *ALL are followed by cards(s) containing data changes. For blank use ⟶

UC	Blank	SN1	Blank	SN2	
1 2 3	4	5 6 7 8 9 10 11	12	13 14 15 16 17 18	19 20 21 22 23 24 25 26 27 28 29 30 31 32 33 34 35 36 37 38 39 40 41 42 43 44 45 46 47 48 49 50 51 52 53 54 55 56 57 58 59 60 61 62 63 64 65 66 67 68 69 70 71 72 73 74 75 76 77 78 79 80

Program Specification

Program SEPARATE

Purpose To separate household and individual data cards into two files.

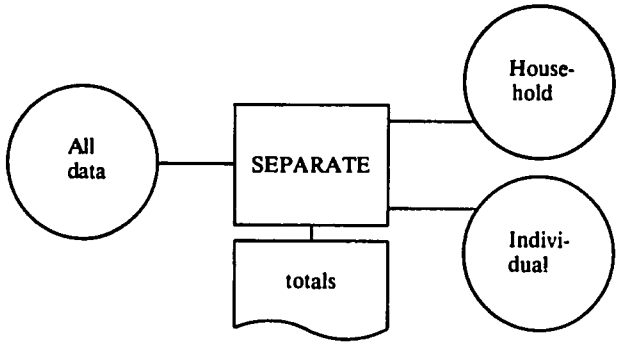

Input File of survey data, card types 10-91. Card type is in columns 1-2.

Output

1. Household data, card types 10, 11 only
2. Individual data, card types 21-91
3. Totals of cards read/written

Processing

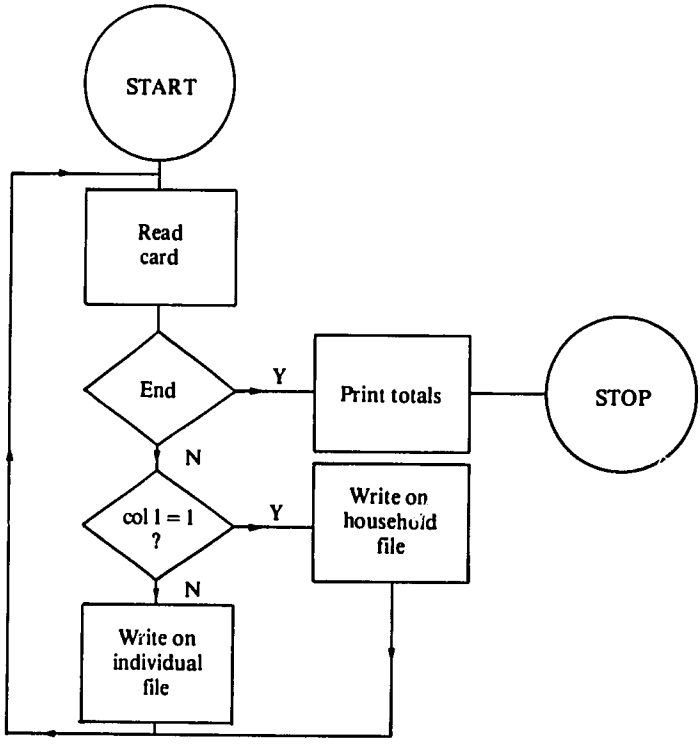

Program Specification

Program — STRUCT

Purpose

1) To check the structure of the individual data. In particular that for each new individual interview
   (i) there are no duplicate card types
   (ii) all mandatory card types are present
   (iii) there are no invalid card types
2) To write genuinely incomplete interviews (card 21 col 26 ≠ 1) to one file and complete correct interviews to a second file

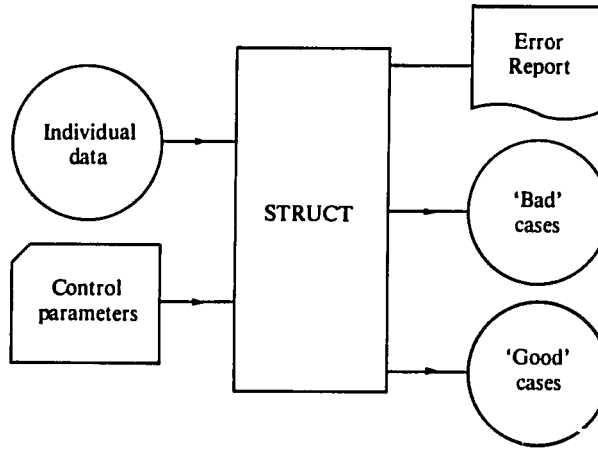

Input

1) File of individual data (FORTRAN unit 7)
2) Parameters specifying (FORTRAN unit 5)
   a) the positions of the individual identification and card type
   b) the card types expected, how many are allowed and if one card type's presence depends on another.

Output

1) File of good, complete interviews (FORTRAN unit 8)
2) File of incomplete interviews (FORTRAN unit 2)
3) Error reports for the following types of error (FORTRAN unit 6)
   Missing card types
   Invalid card types
   Duplicate card types

For each interview with an error, the identification, the types of error found and the cards considered 'good' and 'bad' are printed.

Notes

All checking should be done without producing the two output files. After all errors have been corrected and all remaining incomplete interviews are known to be incomplete (i.e. card 21 column 26 ≠ 1) a final run can be performed to separate the complete from the incomplete, and create two new files. At this stage, the complete interviews may also be rectangularized by padding in birth history cards where appropriate.

Processing

The STRUCT program (written in FORTRAN) is available from WFS Headquarters.

Program Specification

Program — STRUCT2

Purpose — To check the structure of the household data that:

(i) each new household starts with a card type 10

(ii) the number of card type 11's for the household equals the count in card type 10 (columns 25-26)

(iii) line numbers for household members in the household are sequential starting at 01

(iv) household members who are 'eligible' (i.e. female 15-49, married) are marked eligible.

(v) household members who are not eligible are not marked eligible

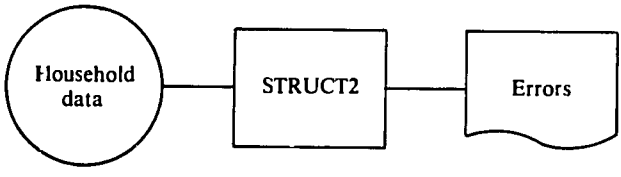

Input — File of household data (card types 10, 11) sorted by household/card type/line number. Fields to be used:

	Field	Columns	Value	Name used in flow-chart
	card type	1-2	10, 11	CTYPE
	household ID	3-8		HHID
	line number	9-10	00-49	LINE
Card type 10:	Number of members	25-26	00-49	NMEMB
Card type 11:	sex	17	2 = female	SEX
	age	18-19		AGE
	ever married	23	1 = yes	EMARR
	eligibility	47	1 = eligible	ELIG

Output — Printout for each household in which an error is detected.

Error messages possible:

1. HOUSEHOLD xxxxxx FIRST CARD NOT TYPE 10
2. HOUSEHOLD xxxxxx NUMBER OF CARDS 11 NOT EQUAL TO NUMBER OF MEMBERS
3. HOUSEHOLD xxxxxx LINE xx INVALID CARD TYPE
4. HOUSEHOLD xxxxxx LINE xx NON SEQUENTIAL LINE NUMBERS
5. HOUSEHOLD xxxxxx LINE xx INELIGIBLE MEMBER MARKED ELIGIBLE
6. HOUSEHOLD xxxxxx LINE xx ELIGIBLE MEMBER NOT MARKED ELIGIBLE

The error messages for a household are followed by a listing of all cards for that household.

Processing — A flowchart is given overleaf

STRUCT 2

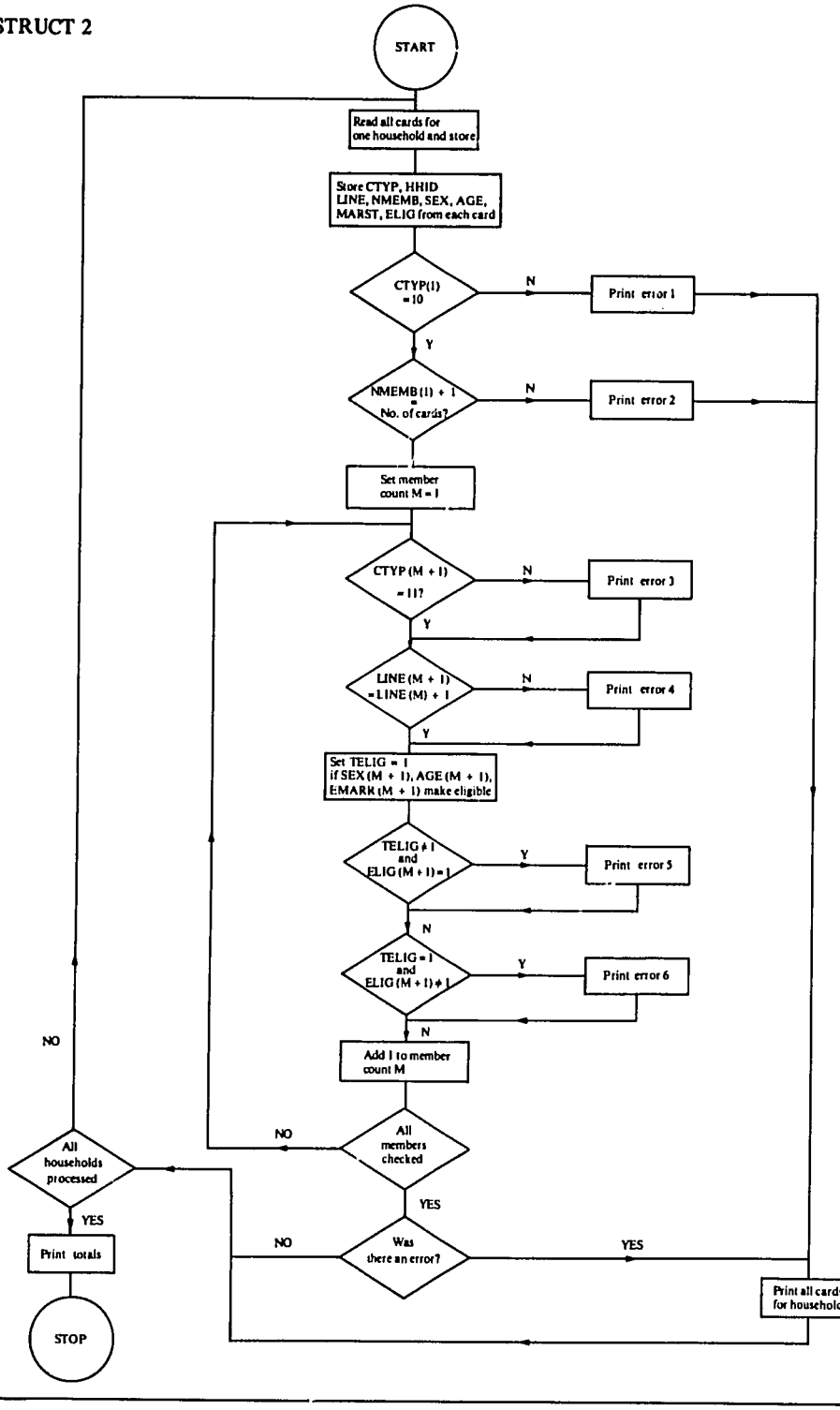
START
Read all cards for one household and store
Store CTYP, HHID LINE, NMEMB, SEX, AGE, MARST, ELIG from each card
CTYP(1) = 10
N
Print error 1
Y
NMEMB (1) + 1 = No. of cards?
N
Print error 2
Set member count M = 1
CTYP (M + 1) = 11?
N
Print error 3
Y
LINE (M + 1) = LINE (M) + 1
N
Print error 4
Y
Set TELIG = 1 if SEX (M + 1), AGE (M + 1), EMARR (M + 1) make eligible
TELIG ≠ 1 and ELIG (M + 1) = 1
Y
Print error 5
N
TELIG = 1 and ELIG (M + 1) ≠ 1
Y
Print error 6
N
Add 1 to member count M
All members checked
NO
YES
Was there an error?
NO
YES
Print all cards for household
All households processed
NO
YES
Print totals
STOP

Program Specification

Program: STRUCT3

Purpose

To match household and individual files and print details of
(i) eligible household members with no individual records.
(ii) individual records with no matching household member record.

Print totals of individuals found for each cluster

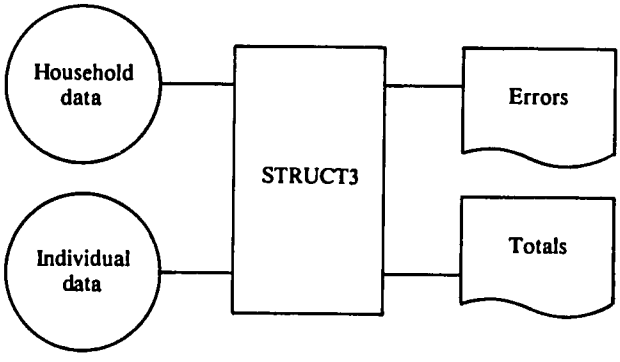

Input

(i) Household data (cards 10, 11) with all errors from STRUCT2 corrected.
The following fields are used:
card type: columns 1-2
HH ID : columns 3-8
line number: column 9-10
Eligibility code: card type 11 column 47

(ii) Individual data (cards 21-91) with only completed interviews and with all errors from STRUCT corrected.

The following fields are used:
card type: column 1-2
HH ID : column 3-8
line number: column 9-10

Output

(i) An error message for each non matching case:

1. HOUSEHOLD ID xxxxxx LINE xx MATCH FOUND BUT MEMBER MARKED INELIGIBLE
2. HOUSEHOLD ID xxxxxx LINE xx NO HOUSEHOLD MEMBER FOR THIS INDIVIDUAL
3. HOUSEHOLD ID xxxxxx LINE xx NO INDIVIDUAL FOR THIS ELIGIBLE MEMBER

In each case, the last cards read from the household and individual files, respectively, are printed after the error message.

(ii) Totals of number of individuals interviewed for each area

Processing

A flowchart is given overleaf

STRUCT 3

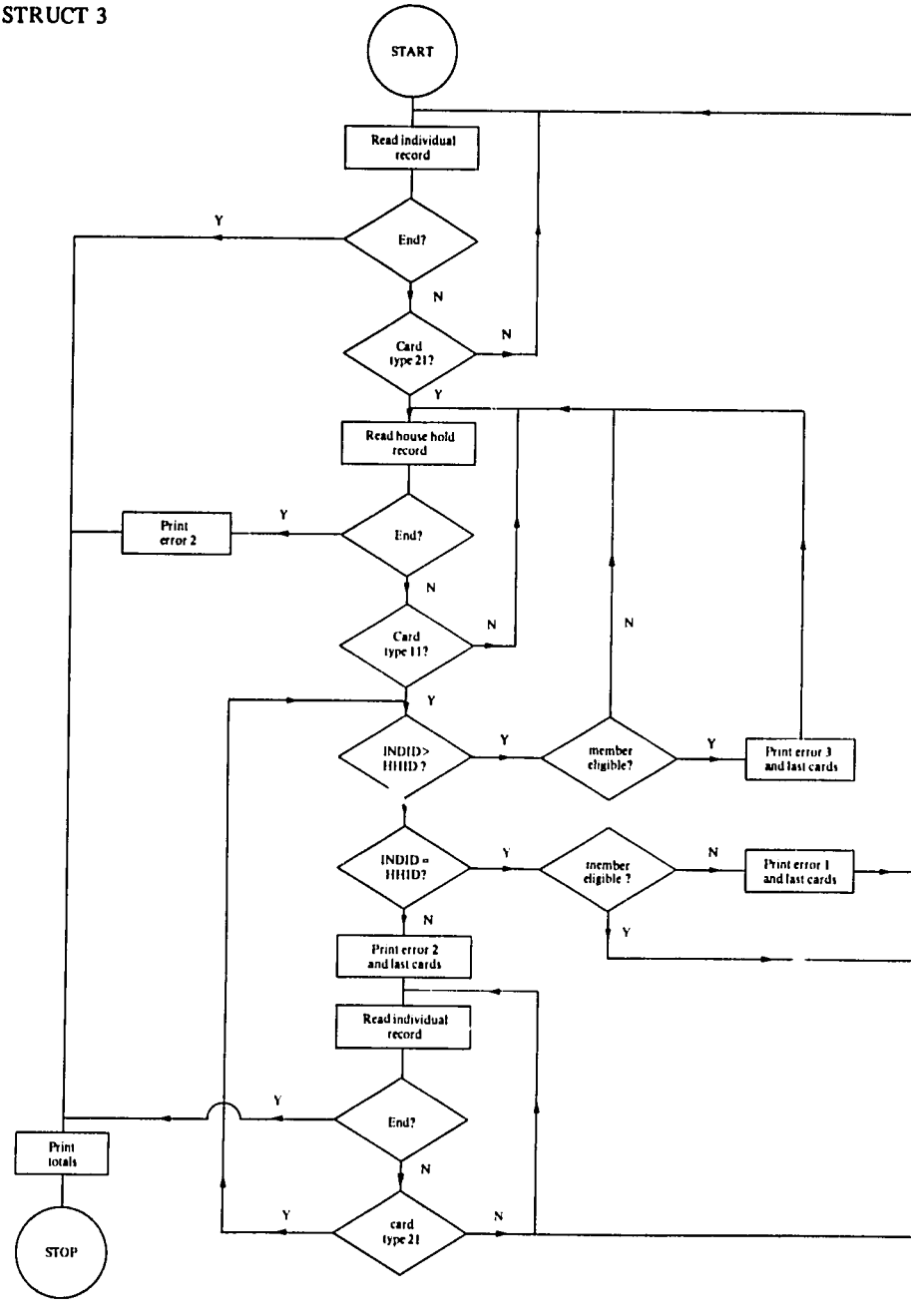
START
Read individual record
End?
Y
N
Card type 21?
N
Y
Read house hold record
Print error 2
Y
End?
N
Card type 11?
N
N
Y
INDID> HHID ?
Y
member eligible?
Y
Print error 3 and last cards
INDID = HHID?
Y
member eligible ?
N
Print error 1 and last cards
Y
N
Print error 2 and last cards
Read individual record
Y
End?
N
Print totals
Y
card type 21
N
STOP

Program Specification

Program STRUCT4

Purpose To detect and print structure errors from data from the WFS Core Questionnaire (household and individual schedules).
Alternative to using STRUCT, STRUCT2, STRUCT3

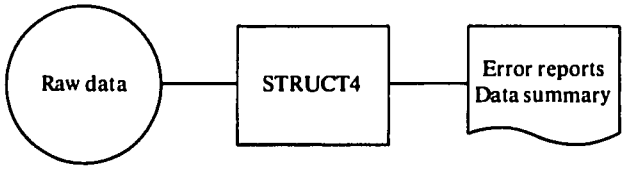

Input WFS Core Questionnaire card image data where columns 1-10 of all records contain the following information

Cols. 1-2	card type
3-5	cluster number
6-8	household number
9-10	line number of household member

The data is sorted by cluster/household/line/card type.

The following fields from card types 10, 11 are required by the program

Card type 10

Cols. 24	Final result
25-26	No. of persons in household
27	No. of eligible women

Card type 11

Cols. 17	Sex
18-19	Age
24	Ever-married
47	Eligibility
48	Result of individual interview

Program Specification (continued)

Output

Printout of errors and data summary

Errors:

For any household with an error, appropriate error messages are printed followed by a listing of all cards for that household.

Possible errors are:

1 DUPL/UNDEFINED RECORD
2 HH RECORD MISSING
3 HH MEMBER RECORD MISSING
4 INCOMPLETE IND QUEST
5 RECORD ID LINE NO NOT 00
6 INCOMPLETE HOUSEHOLD SCHEDULE
7 HHSIZE NOT NUMERIC
8 ELIGWO NOT NUMERIC
9 SELECT NOT NUMERIC
10 RECORD 11 LINE NO NOT NUMERIC
11 RECORD 11 LINE NO NOT CONSECUTIVE
12 ELIG NOT CONSISTENT
13 ELIG AND RESI NOT CONSISTENT
14 RESI AND IND DATA NOT CONSISTENT
15 HHSIZE NOT = RECORD 11 COUNT
16 ELIGWO NOT = ELIG 1 & 2 COUNT
17 SELECT NOT = ELIG 1 COUNT

Data summary:

For each cluster and for the entire file:
Number of households
Number of household members
Number of eligible women (i.e. individual questionnaires)
Number of individual questionnaires with errors
Number of records

A summary of the number of errors detected by type of error is printed for the entire file.

Processing

1. A basic program to read the survey data file and to detect error types 1-4 above is written first. Once this program has been developed and tested it can be used as a starting point for all other programs required i.e. for complete structure editing, consistency editing, date extraction and recoding.

   A basic program for the core questionnaire written in COBOL is available from the WFS. To make this a country specific basic structure program the following modifications are needed:

   (i) Raw data file description
   (ii) Print record description
   (iii) Record definition table
   (iv) Questionnaire identification fields
   (v) Questionnaire data storage area for table of valid record types and for description of card types 10 and 11.

   This basic structure program should be tested.

Program Specification (continued)

2. Extend the data definition to a complete definition of each question (variable) in the questionnaire(i.e. by modifying the questionnaire data storage area) using the codebook as reference document. Note that this is an extremely critical step and must be completely verified. Once finished, there is no need to redefine the data for different programs as each program may use this same correct definition.

   The basic program plus complete data definition can now be used to generate programs for structure editing, consistency checking, date extraction, recoding. The following types of modification to the program will be required:

   (i) Define required data items under the appropriate level in the working-storage section.

   (ii) Code required initialization instructions as part of the appropriate initialization procedure.

   (iii) Code required instructions to process the appropriate level data (household, household member, individual, household summary).

   (iv) Add required error messages to error message work areas.

3. Modifications required to make a structure check program (STRUCT4)

   (i) Data definition working-storage variables:

   - No. of members in household (from card 10)
   - No. of members input (counted)
   - No. of selected/eligible women (from card 10)
   - Eligibility (computed from sex, age, marital status)

   (ii) Initialize

   - Household level data as part of INIT-HH
   - Household member data as part of INIT-LINE

   (iii) Edit procedure code for:

   - Household record in HH-PROC procedure
   - Household member record in HH-MEMBER-PROC procedure
   - Household summary in END-HH procedure

   (iv) Error messages

   - Add structure edit error messages.

4. For modification required to make other programs, see program specifications for RANGE, EXTRACT and RECODE.

A flowchart is given overleaf.

Flowchart for generalised basic structure edit program (STRUCT4)

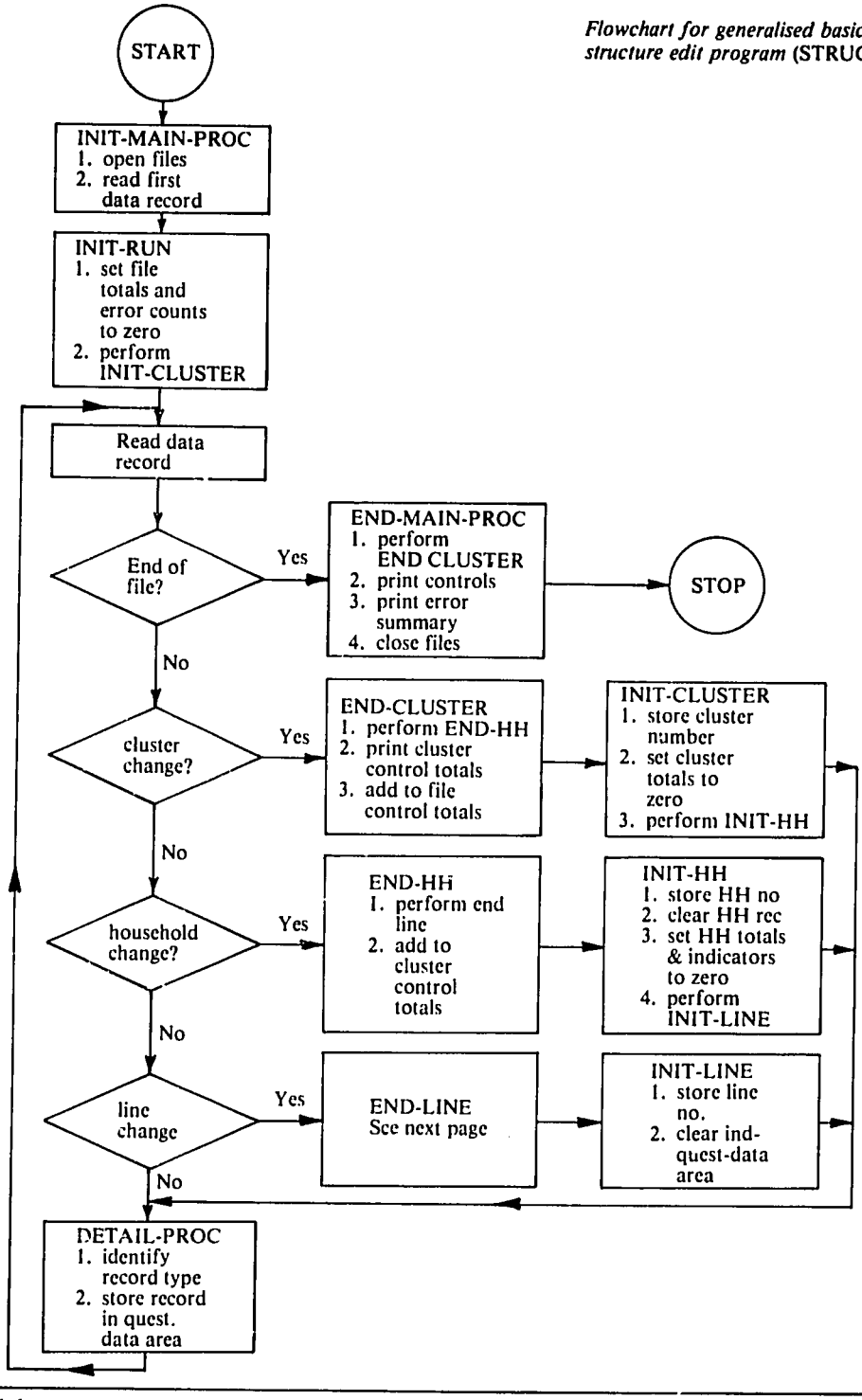

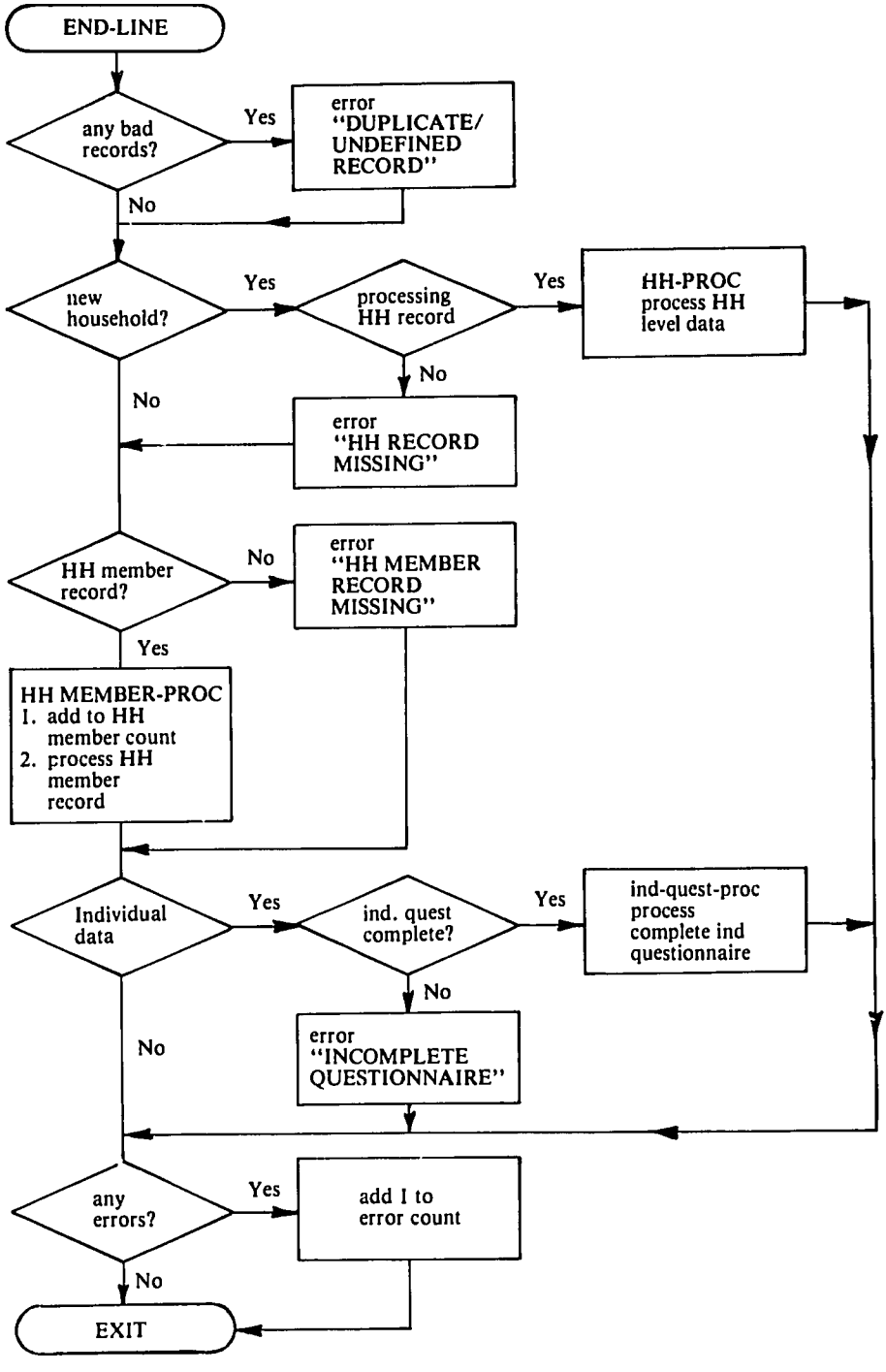
END-LINE
any bad records?
Yes
error "DUPLICATE/ UNDEFINED RECORD"
No
new household?
Yes
processing HH record
Yes
HH-PROC process HH level data
No
No
error "HH RECORD MISSING"
HH member record?
No
error "HH MEMBER RECORD MISSING"
Yes
HH MEMBER-PROC
1. add to HH member count
2. process HH member record
Individual data
Yes
ind. quest complete?
Yes
ind-quest-proc process complete ind questionnaire
No
No
error "INCOMPLETE QUESTIONNAIRE"
any errors?
Yes
add 1 to error count
No
EXIT

Program Specification

Program MARGINALS

Purpose Print marginal (or frequency) distribution on each specified field in a data file

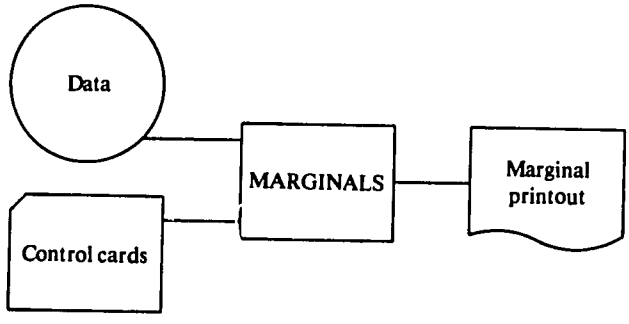

Input

(i) File of survey data

(ii) Control cards describing the contents of each type of data record and specifying for which fields marginals are required.

Output

Marginal printout of the form:

Q105

CODE	FREQUENCY
1	950
2	230
3	845
BLANK	2
TOTAL	2027

Processing

(i) Any statistical package can be used although some may require the input data file to be rectangular (flat)

(ii) A stand alone program, MARGINALS, written in COBOL, is available from WFS headquarters

Program Specification (continued)

Programs RANGE, CONSIS, HHCONS

Purpose Perform range and consistency checks on the data

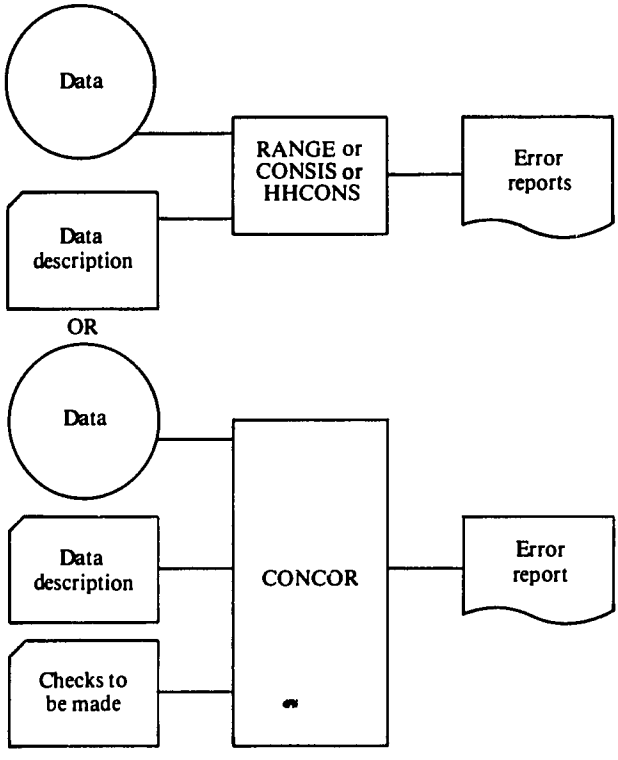

Input
(i) File of data
(ii) File of information describing all fields in the data that are going to be used.
(iii) If CONCOR is being used, file specifying checks to be made in the form of CONCOR statements.

Output Report on errors encountered.

Processing All checks given in the DP specifications for consistency checking are to be programmed. If CONCOR is available, these programs are written in CONCOR (see sample computer runs for example).

If user programs are to be written in COBOL or FORTRAN it is recommended that they read data descriptive information from a separate file. This can be prepared once to describe all fields and used by all the different programs required for consistency checking (and also date editing and recoding).

If a basic structure check program has been written as described in the program specification for STRUCT4 then this can be modified to make a consistency check program without having to redefine the data descriptive information.

Program Specification

Program — EXTRACT

Purpose — Extract date and other related information from the individual file and create a file which can be used for date editing, imputation and recoding (program DEIR)

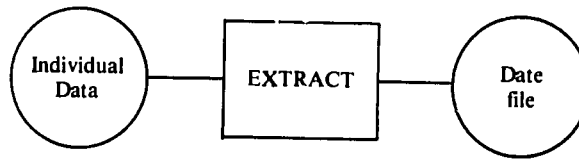

Input — File of individual data with all errors corrected particularly for the following types of checks:—

(i) Skip pattern on respondent's age — Q107, Q108

(ii) Range checks on *all* questions including birth and marriage histories

(iii) Skip checks on birth history:
age at death exists if and only if child is dead

(iv) Skip checks on other pregnancies:
Q236 ≠ NA if and only if Q235 ≥7
Q237 ≠ NA if and only if Q236 = 1

(v) Skip pattern on marriage history (Q401-Q408)

(vi) Skip checks on breastfeeding and current pregnancy data (Q221-Q228)

(vii) Table checks on birth and marriage histories as outlined under "Date Checks" in the editing specifications.

Output — File of date information in the format given in the data processing specifications for date extraction.

Processing

1. Read input record
2. Initialize all fields of output record to 8's (not applicable).
3. Store auxiliary data in output record (questionnaire ID, date of interview, respondent's date of birth and age, current pregnancy data, breastfeeding data).
4. Recode variables for former and current marriage.
5. Merge live births and other pregnancy data according to date (century month code). Count still births, spontaneous abortions, number of entries in birth history (E-BTOT).
6. Write output record.

Note: — If a basic structure program has been written as described in the specification for STRUCT4, the following modifications are required to this to make the program EXTRACT

(i) Data definition:
- Add extract file description in FILE SECTION of DATA DIVISION
- Add work variables to WORKING STORAGE

(ii) Date extract procedure:
- Modify OPEN, CLOSE statements for extract file
- Code the date extract procedure as part of IND-QUEST-PROC which is executed for each strucurally correct individual questionnaire.

Program Specification

Program DEIR

Purpose To check all dates, impute missing or incorrect dates and recode information to give first part of standard recode file (V001-V306)

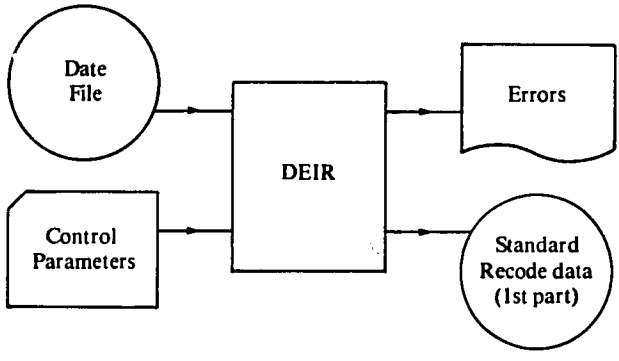

Input : (i) File of date information in the format given in the date extract specifications and output from the EXTRACT program

(ii) Control parameters specifying allowed ranges for different types of dates, which form of dates are expected and their interpretation, imputation method to be used

Output : (i) Error reports on all inconsistent dates

(ii) Optionally, a file consisting of one record per individual containing variables V001-V306 of the standard recode file as given in the recode specifications, with imputed values for missing dates.

NOTE: Variables V002-V006 are filled with 7's, to be replaced later by real values when the two parts of the recode file are merged.

Processing : Program DEIR (written in COBOL) is available from the WFS headquarters.

Program Specification

Program — RECODE

Purpose — To create the second part of the standard recode data file (V401-V907 + country specific variables)

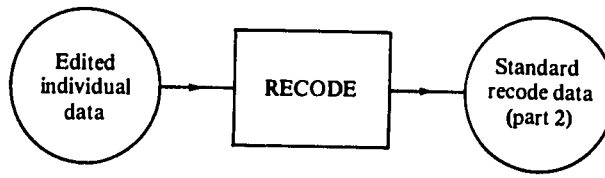

Input — Completely edited individual data file.

Output — File consisting of one record per individual, each record containing values for variables V001-V006, V401-V907 (+ country specific variables) constructed according to the recode specifications.

Processing — For each individual:

1. Read cards for one individual extracting data for all questions referred to in the recode specifications.
2. Construct working variables V103, V108, V206, V208, V213.
3. Construct all other variables, one by one, according to the recode specifications.
4. Write record

NOTE: If a basic structure program has been developed as described in the specification for the program STRUCT4, the following modifications are required to make the program RECODE:

(i) Data definition
- Add recode file description in FILE SECTION of DATA DIVISION
- Add required variables (including auxiliary variables V103, V108, V206, V208, V213) in WORKING-STORAGE

(ii) Recode procedure
- Modify OPEN, CLOSE statements for recode file
- Code the recode procedure as part of IND-QUEST-PROC which is executed for each structurally correct individual questionnaire.

Program Specification

Program	COMBINER
Purpose	To combine different parts of the recode file

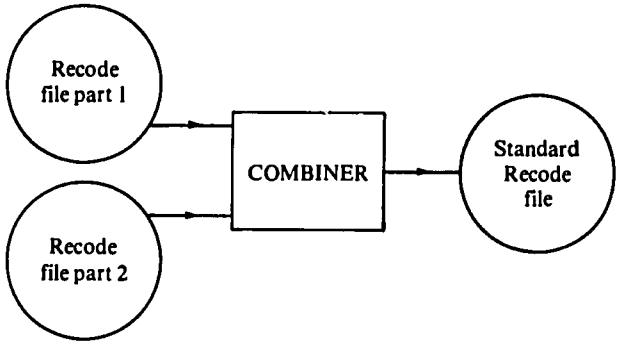

Input	(i) File output from program DEIR (ii) File output from program RECODE
Output	Complete standard recode file
Processing	1. Read one record from each input file 2. Check that identifications are the same 3. Write a combined record

Program Specification

Program — COCGEN AND COCENTS

Purpose — Generates 'TAL' and 'PREP' code for COCENTS from a user oriented language and from libraries of titles and parameters

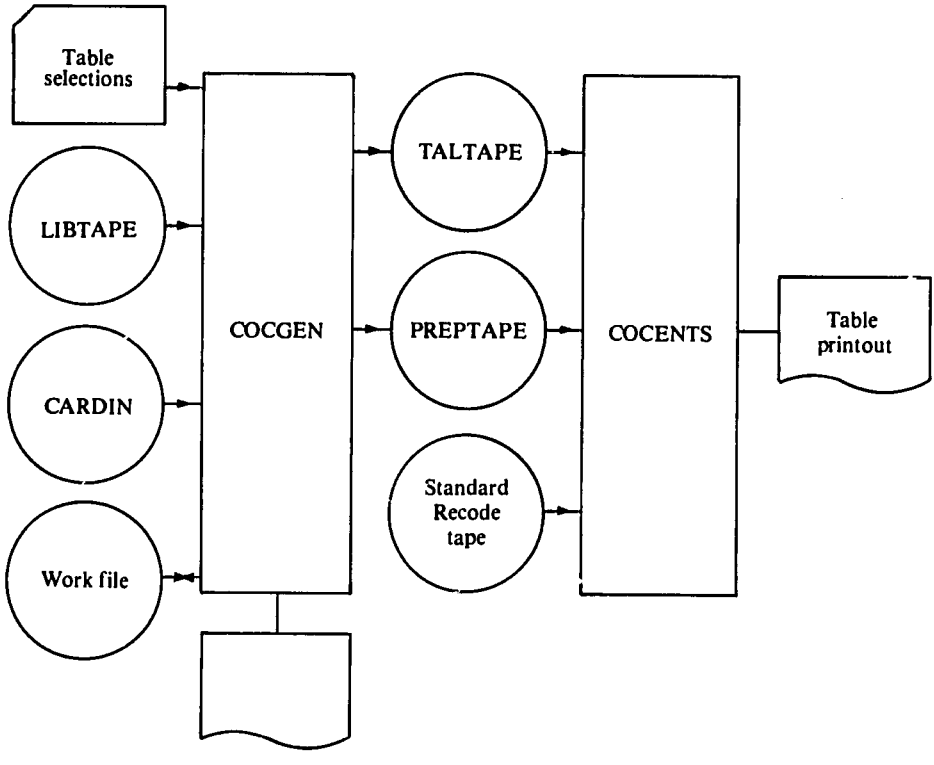

Input
- (i) Table selection and weighting control cards
- (ii) Library of table headings and row and column headings (LIBTAPE)
- (iii) File of table specification parameters (CARDIN)

Output
- (i) 'TAL' code for input to the TALPHI program of COCENTS (TALTAPE)
- (ii) 'PREP' code for input to the PREPPHI program of COCENTS (PREPTAPE)
- (iii) Tables

Processing — COCGEN is available from the WFS headquarters.

COCENTS can be obtained from the US Bureau of the Census if not already installed.

Program Specification

Program	CLUSTERS
Purpose	To compute sampling errors from a clustered sample

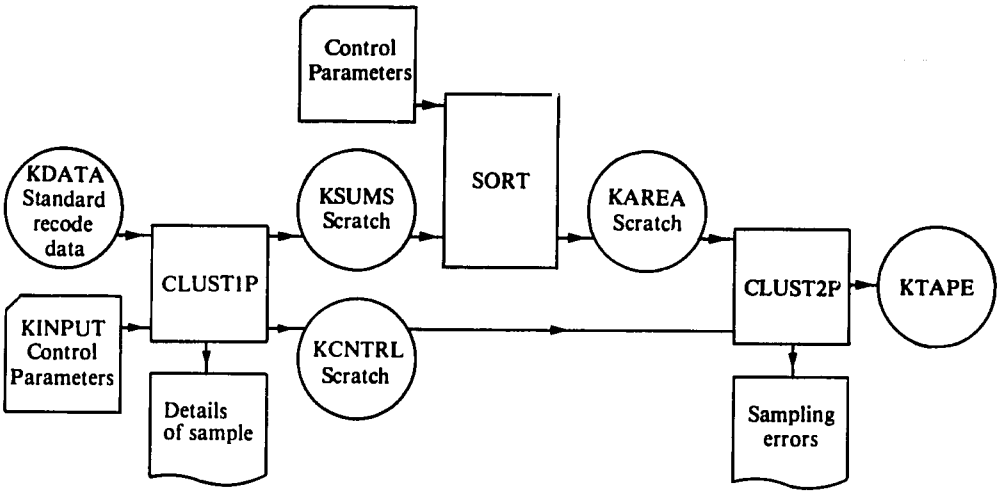

Input	(i) Standard recode data file (with Domain, Stratum, PSU, UAU (V002-V005) variables) sorted in order by UAU. (KDATA) (ii) Control parameters defining estimates for which sampling errors are required. (KINPUT)
Output	(i) Printout giving details of run (ii) Printout giving sampling errors (iii) Sampling errors on tape for further analysis. (KTAPE)
Processing	The CLUSTERS program (written in FORTRAN) and user manual are available from WFS headquarters.

BLANK PAGE

Appendix II

DP Manual for Processing Data from the WFS Core Questionnaire

5. Sample Runs of Programs

Control Cards and Printed Output from all Steps given in the Data Processing Flowcharts in Section 2 (Planning and Control)

BLANK PAGE

Listing

```
:FILE FTN07=CORERD1,OLD
:FILE FTN06=$STDLIST
:RUN LTST
```

```
CLUSTER:  001

     1   1000100100250474231   110511
     2   11001001013I  1114012211
     3   110010010231  1123412311                        11
     4   11001001034 0212209113
     5   11001001044 0211106111
     6   11001001054 02111042
     7   21001001022504742335I  11
     8   31C01001021102611044A  123            1   1021011012  10105
     9   41001001020662II  09631202016521  126811  027011
    10   51001001021091112 2   22                                                    209
    11   61001001021301022 2 11012 2 212                1
    12   71001001021   581     2
    13   81001001021211O         2    1102   1          08
    14   91001001021   42611   052110202612122 144021    3

    15   1000100300260474232I  210911
    16   11001003011A  11 852
    17   110010030228  11 702
    18   11001003033   21 51113
    19   110010030438  11 462
    20   11001003054 0411111115
    21   11001003064 0411110115
    22   11001003074 0411208113
    23   11001003084 04112052
    24   11001003095   212022
    25   22001003442604742360 21
    26   31001003042103412999946 2  1            1   10210510510310419
    27   41001003042230II  2228120322271201  4911    5021    5212    542202  551201
    28   42001003040956II  015721  045821  095911  106021  333321  056111  016311
    29   43001003040364II  056621  056921
    30   51001003041121 2  2     2102995371999535                                   301
    31   61001003042 122 2 2 12121111222                1
    32   71001003042              222301  62086420570
    33   81001003042                              22      05
    34   91001003042                2        2  1132022   2

    35   1000101500205742522I 310211
    36   11001015013I  111241111
    37   110010150231  112161211                        21
    38   11001015024 01111042
    39   110010150331  1112111311
    40   110010150431  1225212311
    41   11001015054 01111022
    42   11001015064 03112012
    43   21001015020257425202213I
    44   31001015021105711055 8  122            221
    45   5100101502              100                                                100
    46   61001015022 2 2 2 2 2 2 2 2 2 222                2115
    47   71001015021 06712104732
    48   81001015021 22          1    2    1         21      06
    49   91001015022169250 2 221021 1 225021114128503 1022

NUMBER OF HOUSEHOLDS IN CLUSTER:    3
```

household 001001

household 001003

```
CLUSTER:  002

    50   100020020025047416 1   110122
    51   11002002013   112242  13                          11
    52   2100200201250474164 51  11
    53   3100200261120572199 50  2  2          1   1022  2  2  2  02
    54   4100200201997051  067211
    55   51002002012  110611274122
    56   61002002012 2 2 2 2 2 2 2 2 2 222                 22                                  203
    57   710020020131              106930173
    58   81002002012                          1            10
    59   910020020122                 10362022116 151021   3
    60   2100200203250474163021 21
    61   3100200203120572107 53  113            1   2  2  101       01
    62   4100200203027311
    63   5100200203106 2            2101037272
    64   61002002032 2 2 2 2 2 2 2 2 2 222                 22                                  108
    65   71002002031 0472:      2
    66   8100200203122        211                          02
    67   9100200203:   2002 22101212        123 24203 2  4

    68   100020060027047416 1   110711
    69   110020060131  111502  11
    70   110020060236  112402  11                          11
    71   1100200603a 0211115114
    72   1100200604a 0211206111
    73   11002006054   21207112
    74   11002006064 0211204
    75   11002006072   212752  12
    76   2100200602270474:6301  11
    77   3100200602111241299994 02  1            1   1011011022  10105
    78   4100200602222511  222311  2222120199682 1  997021
    79   5100200602106110 92        200
    80   6100200602140102221202021111112                   1                                   101
    81   71002006021 01681       13  6506346066710967
    82   8100200602121 2  22  1   2    2          1        05
    83   910020060222               102530122  2151021   3

NUMBER OF HOUSEHOLDS IN CLUSTER:    2
```

```
CLUSTER:  003

    84   1000300100030474261   110711
    85   110030010131  1112713311
    86   110030010231  112262  11                        11
    87   11003001034 02111052
    88   11003001044 02111012
    89   11003001054 0211207112
    90   11003001064 02112022
    91   11003001075   112032
    92   2100300102030474264 01  11
    93   3100300102111241204 48  2  2           1   1022  1022  10408
    94   4100300102026622020567 21  07681201333312010969 11  127011  06721202067311
    95   4200300102067411
    96   5100300102112111 2       22                                                                    208
    97   6100300102110 22 2 2 2 2 2 2 221131             1
    98   7100300102 1 0565       2
    99   7100300102 1 0565       2
   100   8100300102121113          2    1301   1          12
   101   9100300102 1   7052 12106222        133 213521   3

   102   1000300200050474261   110111
   103   11003002013   111322  14                        15

   104   110030040131  1113011511
   105   110030040231  112222  11                        11
   106   11003004034 02112002

   107   2100300201050474 26  5  15

   108   2100300402060474222 51  11
   109   3100300402111355206 52  2              12  2     1012  2   1
   110   410030040201742 1
   111   51003004022       1087432                                                                     101
   112   6100300402112 2 2 2 2 2 2 2 2 21                  1
   113   810030040211                        1301         06
   114   9100300402217325 02 22101212        1151133021   2

NUMBER OF HOUSEHOLDS IN CLUSTER:    5


CLUSTER:  004

   115   1000400400060474221   110311

NUMBER OF HOUSEHOLDS IN CLUSTER:    1


CLUSTER:  934

   116   9993456765

NUMBER OF HOUSEHOLDS IN CLUSTER:    1

TOTAL NUMBER OF CLUSTERS:    5
```

Format Check

```
:FILE FTN07=CORERD1,OLD
:FILE FTN06=$STDLIST
:FILE FTN05=$STDIN
:RUN FORMAT

                    WFS FORMAT CHECK PROGRAM.  LAST UPDATED 25/3/80

CONTROL CARDS READ:

   1  56   1  25   0  36
10 28
11 48
21 25
31 58
41 74
42 74
43 74
51 79
61 50
71 62
81 48
91 48

RECORD       8                NON-NUMERIC CHARACTERS
3100100102110261104 4A  123            1   1021011012  10105

RECORD      14                PUNCHING BEYOND LAST ALLOWED COLUMN
91001001021   42611   05211020261212 144021     3

RECORD      25                INVALID CARD TYPE
RECORD      25                LINE NUMBER OUT OF RANGE
22001003442604742360 21

RECORD     116                INVALID CARD TYPE
RECORD     116                AREA OUT OF RANGE
RECORD     116                HH OUT OF RANGE
RECORD     116                LINE NUMBER OUT OF RANGE
9993458765

NUMBER OF RECORDS READ          116
NUMBER OF RECORDS WITH ERROR      5
```

ranges for cluster, household, line number

card types and numbers of columns used on each

Update for Format Errors

```
:FILE INPUT=CORERD1,OLD
:FILE OUTPUT=CORERD2,DLD
:FILE TRANS=UPDRD1,OLD
:FILE PRINT=$STDLIST
:RUN SUPDATE
```

```
#FS SERIAL UPDATE PROGRAM VERSION 1 (APRIL 1979)

*REP 000008                                                                    UPDATE CARD NO. 000001
                41                                                             UPDATE CARD NO. 000001

*REP 000014                                                                    UPDATE CARD NO. 000002
                                        3-                                     UPDATE CARD NO. 000002

*REP 000046                                                                    UPDATE CARD NO. 000003
21      04                                                                     UPDATE CARD NO. 000003

*DEL 000116                                                                    UPDATE CARD NO. 000004

***** LISTING OF TRANSACTIONS CARDS FINISHED *****


....*....1....*....2....*....3....*....4....*....5....*....6....*....7....*....8
*REP 000008                                                                    UPDATE CARD NO. 000001
                41


NO OF CARD-IMAGES DELETED =            000001
NO OF CARD-IMAGES ADDED =              000000
NO OF CARD-IMAGES REPLACED =           000003
NO OF CARD-IMAGES GLOBALLY CHANGED =   000000
NO OF UPDATE CARDS FLUSHED =           000000
NO OF SETS OF UPDATE CARDS IN ERROR =  000000
TOTAL SETS OF UPDATE CARDS =           000004

TOTAL NO OF RECORDS READ =             000116
TOTAL NO OF RECORDS WRITTEN =          000115
```

Sort

```
:RUN SORT.PUB.SYS

HP32214B.02.00 SORT/3000 THU, MAY  8, 1980, 10:10 AM
(C) HEWLETT-PACKARD CO. 1978



INPUT CORERD2,200 ,80
OUTPUT CORERD3
KEY 3,8,BYTE:1,2,BYTE — sorting by identification/card type

                    STATISTICS

NUMBER OF RECORDS =                          115
NUMBER OF INTERMEDIATE PASSES =                0
SPACE AVAILABLE (IN WORDS) =              12,239
NUMBER OF COMPARES =                         860
NUMBER OF SCRATCHFILE IO'S =                  78
CPU TIME (MINUTES) =                         .03
ELAPSED TIME (MINUTES) =                     .08
RECORD SIZE (IN BYTES) =                      80
SCRATCH FILE SIZE (# SECTORS) =               94
```

Separate Household and Individual Data

```
:FILE FTN07=CORERD3,OLD
:FILE FTN08=CUREIND1,OLD
:FILE FTN09=COREHH1,OLD
:RUN SEPAR



FILE SEPARATION COMPLETE
RECORDS IN              115
INDIVIDUAL RECORDS WRITTEN      67
HOUSEHOLD RECORDS WRITTEN       48
```

Structure Check on Individual Data

```
:FILE FTN05=$STDIN
:FILE FTN07=CUREIND1,OLD
:FILE FTN08=$NULL
:RUN STRUCT
```

```
 STRUCT       WFS STRUCTURE EDIT PROGRAM   LAST UPDATED      AUGUST  1980

CONTROL CARDS INPUT:


PARM  50                  STRUCTURE CHECK ON CORE INDIVIDUAL DATA
ID     3   8
CARD   1   2
TYP 21     1   1
TYP 31     1   1
TYP 41     0   1
TYP 42     0   141
TYP 43     0   142
TYP 51     1   1
TYP 61     1   1
TYP 71     1   1
TYP 81     1   1
TYP 91     1   1

OPTIONS SELECTED:

MAXIMUM NUMBER OF ERRORS    50
FILE OF REJECTED CARDS TO BE WRITTEN   NO
TYPE OF PRINTOUT FOR ERROR CASES   FULL
MAX NUMBER CASES OUT OF ORDER:    0
NUMBER OF ID FIELDS   1
STARTING POSITION AND LENGTH OF ID FIELDS:
    3  8    0  0    0  0    0  0
NUMBER OF CARD TYPES PER CASE  10
STARTING POSITIONS AND LENGTHS OF CARD TYPE    1  2    0  0

CARD TYPES EXPECTED:
21  31  41  42  43  51  61  71  81  91



CASE COUNT #:       7 CASE ID #: 00300102
-----------------------------------------------------------------------
EXTRA CARDS FOR CARD TYPES:
                71
CASE DELETED
                        GOOD CASE CARDS:
2100300102030474264 01  11
3100300102111241204 48  2  2          1   1022  1022  10408
4100300102026622020567 21  076812015333120109691 1  127011  06721202067311
420030010206741 1
5100300102112111 2       22                                                    208
6100300102110 22 2 2 2 2 2 2 221131            1
7100300102 1 0565       2
8100300102121113        2    1301   1          12
9100300102 1   7052 12106222        133 213521   3
                        BAD CASE CARDS:
71003001021 0565       2
```

```
CASE COUNT #:        8 CASE ID #: 00300201
-----------------------------------------------------------------------
MISSING CARD TYPES:
              31     51     61     71     81     91
CASE DELETED
                     GOOD CASE CARDS:
21003002010504742 6  5  15
```

incomplete interview
card 21 col 26 = 5

```
CASE COUNT #:        9 CASE ID #: 00300402
-----------------------------------------------------------------------
MISSING CARD TYPES:
              71
CASE DELETED
                     GOOD CASE CARDS:
210030040206047422251  11
310030040211135520652  2              12  2     1012  2   1
410030040201742 1
51003004022       1087432
610030040211 2 2 2 2 2 2 2 2 21                  1                    101
810030040211                      1001           06
910030040221732502 22101212        1151133021    2

TOTAL # MISSING CARDS   =       7
TOTAL # CARDS PADDED    =       0
TOTAL # INVALID CARDS   =       0
TOTAL # EXTRA CARDS     =       1
TOTAL CARDS OUT OF ORDER=       0
TOTAL # WITHOUT PREVIOUS=       0

 NORMAL TERMINATION; ALL CARDS PROCESSED

TOTAL CARDS READ =      67
TOTAL CASES DONE =       9
TOTAL CASES WRITTEN=       6
TOTAL CASES DELETED=       3
NUMBER OF CASES W. ERROR(S)=       3
```

Update for Structure Errors

```
:FILE INPUT=COREIND1,OLD
:FILE OUTPUT=COREIND2,OLD
:FILE CARD=UPDIND1,OLD
:FILE PRINT=$STDLIST
:FILE PARM=$STDIN
:RUN UPDATE
```

```
NFS UPDATE PROGRAM VERSION 2 (MARCH 1979)

ID 03 08
CT 01 02
UC 80

THE ID STARTS FROM COL 03 WITH A FIELD LENGTH OF 08
THE CARD-TYPE STARTS FROM COL 01 WITH A FIELD LENGTH OF 02
THE UPDATE-CODE IS LOCATED IN COL 80

....*....1....*....2....*....3....*....4....*....5....*....6....*....7....*....8
7100300102                                                                  1   UPDATE CARD NO. 000001
71003001021 0565      2                                                           (DELETED)

....*....1....*....2....*....3....*....4....*....5....*....6....*....7....*....8
71003004021 0872      2                                                     4   UPDATE CARD NO. 000002
71003004021 0872      2                                                           (INSERTED)

CARD-IMAGES DELETED =          000001
CARD-IMAGES REPLACED =         000000
CARD-IMAGES INSERTED =         000001
CARD-IMAGES FIELD CORRECTED =  000000
UPDATE CARDS IN ERROR =        000000
UPDATE CARDS FLUSHED =         000000
TOTAL NO UPDATE CARDS =        000002

NO OF RECORDS READ =           000068
NO OF RECORDS WRITTEN =        000068
```

Structure Check, Rectangularization and Separation of Incomplete Interviews

```
:FILE FTN05=$STDIN
:FILE FTN07=COREIND2,OLD
:FILE FTN08=COREIND3,OLD
:FILE FTN02=COREINC,OLD —for incomplete interviews
:FILE FTN06=$STDLIST
:RUN STRUCT
```

```
STRUCT        WFS STRUCTURE EDIT PROGRAM   LAST UPDATED      AUGUST  1980
CONTROL CARDS INPUT:

PARM  10            1   1    SEPARATE INCOMPLETES AND RECTANGULARIZE REST
ID     3   8
CARD   1   2
TYP 21     1   1
TYP 31     1   1
TYP 41     1   1       1
TYP 42     1   1       1
TYP 43     1   1       1
TYP 51     1   1
TYP 61     1   1
TYP 71     1   1
TYP 81     1   1
TYP 91     1   1

OPTIONS SELECTED:

MAXIMUM NUMBER OF ERRORS    10
FILE OF REJECTED CARDS TO BE WRITTEN   YES
TYPE OF PRINTOUT FOR ERROR CASES   BAD
MAX NUMBER CASES OUT OF ORDER:    0
NUMBER OF ID FIELDS   1
STARTING POSITION AND LENGTH OF ID FIELDS:
    3  8    0  0    0  0    0  0
NUMBER OF CARD TYPES PER CASE  10
STARTING POSITIONS AND LENGTHS OF CARD TYPE    1  2    0  0

CARD TYPES EXPECTED:
21  31  41  42  43  51  61  71  81  91


CASE COUNT #:       1 CASE ID #: 00100102
-----------------------------------------------------------------------
MISSING CARD TYPES:
              42    43


CASE COUNT #:       3 CASE ID #: 00101502
-----------------------------------------------------------------------
MISSING CARD TYPES:
              41    42    43


CASE COUNT #:       4 CASE ID #: 00200201
-----------------------------------------------------------------------
MISSING CARD TYPES:
              42    43
```

```
CASE COUNT #:        5 CASE ID #: 00200203
-----------------------------------------------------------------------
MISSING CARD TYPES:
              42    43


CASE COUNT #:        6 CASE ID #: 00200602
-----------------------------------------------------------------------
MISSING CARD TYPES:
              42    43


CASE COUNT #:        7 CASE ID #: 00300102
-----------------------------------------------------------------------
MISSING CARD TYPES:
              43


CASE COUNT #:        8 CASE ID #: 00300201
-----------------------------------------------------------------------
MISSING CARD TYPES:
              31    41    42    43    51    61    71    81    91     incomplete interview
CASE DELETED


CASE COUNT #:        9 CASE ID #: 00300402
-----------------------------------------------------------------------
MISSING CARD TYPES:
              42    43

TOTAL # MISSING CARDS   =      23
TOTAL # CARDS PADDED    =      14
TOTAL # INVALID CARDS   =       0
TOTAL # EXTRA CARDS     =       0
TOTAL CARDS OUT OF ORDER=       0
TOTAL # WITHOUT PREVIOUS=       0

 NORMAL TERMINATION; ALL CARDS PROCESSED

TOTAL CARDS READ =      67
TOTAL CASES DONE =       9
TOTAL CASES WRITTEN=       8 ..... ..... completed interviews
TOTAL CASES DELETED=       1 ..... ..... incomplete interviews
NUMBER OF CASES W. ERROR(S)=       8
```

Structure Check on Household Data

```
:FILE FTN08=COREHH1,OLD
:FILE FTN06=$STDLIST
:RUN STRUCT2                                                          00086000
                                                                      00087000



HOUSEHOLD 001015            NO. OF CARDS 11 NOT EQUAL NO. OF MEMBERS IN CARD 10
HOUSEHOLD 001015 LINE  2    SEX,AGE,EVER MARRIED NOT CONSISTENT WITH ELIGIBILITY
HOUSEHOLD 001015 LINE  2    NON SEQUENTIAL LINE NOS.
1000101500020574252 21 310211
110010150131  111241111
110010150231  112161211                        21
11001015024 01111042
110010150331  1112111311
110010150431  1225212311
11001015054 01111022
11001015064 03112012


HOUSEHOLD 003002 LINE  1    SEX,AGE,EVER MARRIED NOT CONSISTENT WITH ELIGIBILITY
1000300200050474261   110111
11003002013   111322  14                       15

HOUSEHOLD 003004            FIRST CARD NOT TYPE 10
110030040131  1113011511
110030040231  112222  11                       11
11003004034 02112002


HOUSEHOLD 004004            NO. OF CARDS 11 NOT EQUAL NO. OF MEMBERS IN CARD 10
1000400400060474221   110311


END OF STRUCT2 RUN

NUMBER OF HOUSEHOLDS PROCESSED=       8
NUMBER OF HOUSEHOLDS WITH ERRORS=     4
```

Structure Check (Match) on Individual and Household Data

```
:FILE FTN07=COREIND3,OLD
:FILE FTN08=COREHH1,OLD                                                  00089000
:FILE FTN06=$STDLIST                                                     00090000
:RUN STRUCT3                                                             00091000

INDIVIDUAL        00100304    MATCH FOUND BUT HH NOT ELIGIBLE
LAST HH AND IND CARDS READ:
110010030438  11 462
2100100304260474236021 21

INDIVIDUAL        00101502    MATCH FOUND BUT HH NOT ELIGIBLE
LAST HH AND IND CARDS READ:
110010150231  112161211
2100101502020574252022131                    21

INDIVIDUAL        00200203    NO HOUSEHOLD MEMBER MATCH
LAST HH AND IND CARDS READ:
110020060131  111502  11
2100200203250474163021 21

HOUSEHOLD MEMBER  00300201    HH ELIGIBLE BUT NO INDIVIDUAL MATCH
LAST HH AND IND CARDS READ:
11003002013   111322  14
2100300402060474222251  11                   15

END OF STRUCT3 RUN

TOTAL NUMBER OF HOUSEHOLDS                                  8
TOTAL NUMBER OF INDIVIDUALS                                 7
NUMBER OF ELIGIBLE MEMBERS WITHOUT INDIVIDUAL DATA          3
NUMBER OF INDIVIDUALS WITHOUT MATCHING MEMBER DATA          1

NUMBERS OF INDIVIDUALS INTERVIEWED BY CLUSTER

CLUSTER  INDIVIDUALS

    1          3
    2          3
    3          2
```

Update Household Data Errors

```
:FILE INPUT=COREHH1,OLD
:FILE OUTPUT=COREHH2,OLD                                                 00093000
:FILE CARD=UPDHH1,OLD                                                    00094000
:FILE PRINT=$STDLIST                                                     00095000
:FILE PARM=$STDIN                                                        00096000
:RUN UPDATE.P.HB                                                         00097000

WFS UPDATE PROGRAM VERSION 2 (MARCH 1979)

ID 03 08
CT 01 02
UC 80

THE ID STARTS FROM COL 03 WITH A FIELD LENGTH OF 08
THE CARD-TYPE STARTS FROM COL 01 WITH A FIELD LENGTH OF 02
THE UPDATE-CODE IS LOCATED IN COL 80
```

```
....*....1....*....2....*....3....*....4....*....5....*....6....*....7....*....8
11001003u4      2      12                        11                              5
110010030438  11 4b2                                                              5
110010030438  112462  12                         11
```

UPDATE CARD NO. 000001
(FIELD CORRECTION-BEFORE
(FIELD CORRECTION-AFTER)

```
....*....1....*....2....*....3....*....4....*....5....*....6....*....7....*....8
1000101500                07
10001015000205742522 1 310211                                                     5
10001015000205742522 1 310711
```

UPDATE CARD NO. 000002
(FIELD CORRECTION-BEFORE
(FIELD CORRECTION-AFTER)

change to seven household members

```
....*....1....*....2....*....3....*....4....*....5....*....6....*....7....*....8
1100101502
110010150231  112161211                          1                               5
110010150231  112161211                          21
                                                 11
```

UPDATE CARD NO. 000003
(FIELD CORRECTION-BEFORE
(FIELD CORRECTION-AFTER)

change from not eligible to eligible

```
....*....1....*....2....*....3....*....4....*....5....*....6....*....7....*....8
1100101502
11001015024 01111042                                                              1
```

UPDATE CARD NO. 000004
(DELETED)

delete duplicate member 02

```
....*....1....*....2....*....3....*....4....*....5....*....6....*....7....*....8
11001015074 011111042
11001015074 011111042                                                             4
```

UPDATE CARD NO. 000005
(INSERTED)

make duplicate member 02 into member 07

```
....*....1....*....2....*....3....*....4....*....5....*....6....*....7....*....8
1100300201      2
110030020 13   111322  14                        15                              5
110030020 13   112322  14                        15
```

UPDATE CARD NO. 000006
(FIELD CORRECTION-BEFORE
(FIELD CORRECTION-AFTER)

change to female

```
....*....1....*....2....*....3....*....4....*....5....*....6....*....7....*....8
10003004000604742 21   110311                                                    4
10003004000604742 21   110311
```

UPDATE CARD NO. 000007
(INSERTED)

```
....*....1....*....2....*....3....*....4....*....5....*....6....*....7....*....8
1000400400
10004004000604742 21   110311                                                    1
```

UPDATE CARD NO. 000008
(DELETED)

```
CARD-IMAGES DELETED =          000002
CARD-IMAGES REPLACED =         000000
CARD-IMAGES INSERTED =         000002
CARD-IMAGES FIELD CORRECTED =  000004
UPDATE CARDS IN ERROR =        000000
UPDATE CARDS FLUSHED =         000000
TOTAL NO UPDATE CARDS =        00000A

NO OF RECORDS READ =           000048
NO OF RECORDS WRITTEN =        000048
```

Update Individual Errors found from Matching Household and Individual Data

```
:FILE INPUT=COREIND3,OLD
:FILE OUTPUT=COREIND4,OLD
:FILE CARD=UPDIND3,OLD
:FILE PRINT=$STDLIST
:FILE PARM=$STDIN
:RUN UPDATE
```

```
HFS UPDATE PROGRAM VERSION 2 (MARCH 1979)

ID 03 08
CT 01 02
UC 80

THE ID STARTS FROM COL 03 WITH A FIELD LENGTH OF 08
THE CARD-TYPE STARTS FROM COL 01 WITH A FIELD LENGTH OF 02
THE UPDATE-CODE IS LOCATED IN COL 80

....*....1....*....2....*....3....*....4....*....5....*....6....*....7....*....8
2100200203                                                                      2   UPDATE CARD NO. 000001
910020020 3                                                                     2
210020020325047416302 1 21                                                          (DELETED)
310020020312057210753  113          1   2  2  101      01                           (DELETED)
410020020302731 1                                                                   (DELETED)
4200200203                                                                          (DELETED)
4300200203                                                                          (DELETED)
5100200203 1062          2101037272                                            100  (DELETED)
6100200203 2 2 2 2 2 2 2 2 2 222                22                                  (DELETED)
7100200203 1 04721     2                                                            (DELETED)
8100200203122       211                         02                                  (DELETED)
9100200203 1   2002 22101212       123 24203 2  4                                   (DELETED)

CARD-IMAGES DELETED =          000010
CARD-IMAGES REPLACED =         000000
CARD-IMAGES INSERTED =         000000
CARD-IMAGES FIELD CORRECTED =  000000
UPDATE CARDS IN ERROR =        000000
UPDATE CARDS FLUSHED =         000000
TOTAL NO UPDATE CARDS =        000001

NO OF RECORDS READ =           000080
NO OF RECORDS WRITTEN =        000070
```

delete all individual data for case with no matching household member (card 11).

Recheck Structure of Household Data

```
:FILE FTN08=COREHH2,OLD
:FILE FTN06=$STDLIST
:RUN STRUCT2                                                    00113000
                                                                00114000

END OF STRUCT2 RUN

NUMBER OF HOUSEHOLDS PROCESSED=        8
NUMBER OF HOUSEHOLDS WITH ERRORS=      0
```

Recheck Structure (Match) of Individual and Household Data

```
:FILE FTN07=COREIND4,OLD
:FILE FTN08=COREHH2,OLD                                         00115000
:FILE FTN06=$STDLIST                                            00116000
:RUN STRUCT3                                                    00117000
                                                                00118000


HOUSEHOLD MEMBER  00300201    HH ELIGIBLE BUT NO INDIVIDUAL MATCH
LAST HH AND IND CARDS READ:
110030020 13   112322  14                    15 — incomplete interview which has
2100300402060474 22251  11                        been removed from individual file


END OF STRUCT3 RUN

TOTAL NUMBER OF HOUSEHOLDS                                  7
TOTAL NUMBER OF INDIVIDUALS                                 8
NUMBER OF ELIGIBLE MEMBERS WITHOUT INDIVIDUAL DATA          0
NUMBER OF INDIVIDUALS WITHOUT MATCHING HEMBER DATA          1


NUMBERS OF INDIVIDUALS INTERVIEWED BY CLUSTER

CLUSTER  INDIVIDUALS

    1          3
    2          2
    3          2
```

Marginals on Individual Data Test Run on 2 Questions

```
:FILE FTN08=COREIND4,OLD
:FILE FTN05=$STDIN
:RUN SPSS1.PUB.LIB



STATISTICAL PACKAGE FOR THE SOCIAL SCIENCES                          THU, MAY  8, 1980, 10:14 AM    PAGE    1

SPSS FOR THE HP/3000 RELEASE 1.0. VERSION 7.0, JUNE 1978, MCMASTER UNIVERSITY


DEFAULT SPACE ALLOCATION..      ALLOWS FOR..    25 TRANSFORMATIONS
WORKSPACE      17500 BYTES                     100 RECODE VALUES + LAG VARIABLES
TRANSPACE       2500 BYTES                     400 IF/COMPUTE OPERATIONS

                    RUN NAME           MARGINALS ON STRUCTURE EDITED DATA
                    VARIABLE LIST      Q101,Q102
                    INPUT FORMAT       FIXED(T11,F1.0,F1.0//////////)


                   ACCORDING TO YOUR INPUT FORMAT, VARIABLES ARE TO BE READ AS FOLLOWS

                   VARIABLE  FORMAT  RECORD    COLUMNS

                   Q101      F 1. 0       1    11-  11
                   Q102      F 1. 0       1    12-  12

THE INPUT FORMAT PROVIDES FOR   2 VARIABLES.    2 WILL BE READ
IT PROVIDES FOR 10 RECORDS ('CARDS') PER CASE.  A MAXIMUM OF   12 'COLUMNS' ARE USED ON A RECORD.

                    INPUT MEDIUM       DISK
                    N OF CASES         UNKNOWN
                    FREQUENCIES        GENERAL=Q101,Q102

GIVEN WORKSPACE ALLOWS FOR   1750 TOTAL VALUES AND    175 LABELED VALUES PER VARIABLE FOR 'FREQUENCIES'

                    READ INPUT DATA

AFTER READING      7 CASES FROM SUBFILE NONAME  ,  END OF FILE WAS ENCOUNTERED ON LOGICAL UNIT # 8
```

MARGINALS ON STRUCTURE EDITED DATA WED, AUG 13, 1980, 11:06 AM PAGE 2

FILE NONAME (CREATION DATE = 8/13/80)

Q101

CATEGORY LABEL	CODE	ABSOLUTE FREQ	RELATIVE FREQ (PCT)	ADJUSTED FREQ (PCT)	CUM FREQ (PCT)
	0.	3	42.9	42.9	42.9
	2.	4	57.1	57.1	100.0
	TOTAL	7	100.0	100.0	

VALID CASES 7 MISSING CASES 0

MARGINALS ON STRUCTURE EDITED DATA WED, AUG 13, 1980, 11:06 AM PAGE 3

FILE NONAME (CREATION DATE = 8/13/80)

Q102

CATEGORY LABEL	CODE	ABSOLUTE FREQ	RELATIVE FREQ (PCT)	ADJUSTED FREQ (PCT)	CUM FREQ (PCT)
	2.	1	14.3	14.3	14.3
	3.	1	14.3	14.3	28.6
	5.	2	28.6	28.6	57.1
	6.	2	28.6	28.6	85.7
	7.	1	14.3	14.3	100.0
	TOTAL	7	100.0	100.0	

VALID CASES 7 MISSING CASES 0

Concor Program for Household Data Range and Consistency Checks

```
** CONSISTENCY CHECKS FOR HOUSEHOLD DATA ASSUMING STRUCTURE EDIT COMPLETE
**
** CORE QUESTIONNAIRE    DICTIONARY FOR HOUSEHOLD SCHEDULE
**
     DICT  ZNC          3 6 N
           ZCT          1 2 N
           CARD         1 2 N
           CLUS         3 3 N
           HH           6 3 N
           LINE         9 2 N
**
** CARD 10
           INTDY   10  11 2 N              88
           INTMH   10  13 2 N              88
           INTYR   10  15 2 N              88
           INTWD   10  17 2 N              88
           RSLT1   10  19 1 N              88
           RSLT2   10  20 1 N              88
           RSLT3   10  21 1 N              88
           RSLT4   10  22 1 N              88
           VISIT   10  23 1 N              88
           FRSLT   10  24 1 N              88
           NPERS   10  25 1 N              88
           NELIG   10  27 1 N              88
**
** CARD 11
           GENER   11  11 1 N              88
           COUPL   11  12 1 N              88
           MLINE   11  13 2 N              88
           JURE    11  15 1 N              88
           FACTO   11  16 1 N              88
           SEX     11  17 1 N              88
           AGE     11  18 2 N             888
           SCHL    11  20 1 N              88
           EDLEV   11  21 1 N              88
           EDGRA   11  22 1 N              88
           EMARR   11  23 1 N              88
           MARST   11  24 1 N              88
           ELIG    11  47 1 N              88
           IRSLT   11  48 1 N              88
**
** NOTE    ALL BLANK FIELDS CONVERTED TO 88
**
* ARRAYS FOR CHECKING PARTNER AND MOTHERS INFORMATION
*   MATP(COUPL,1) = NUMBER OF MEMBERS WITH COUPLE CODE COUPL
*       (COUPL,2) = SEX OF 1ST MEMBER WITH COUPLE CODE COUPL
*       (COUPL,3) = GENERATION OF 1ST MEMBER OF COUPLE
*       (COUPL,4) = EVER MARRIED CODE FOR 1ST MEMBER
*       (COUPL,5) = MOTHERS LINE FOR FIRST MEMBER
*   MATM(LINE,1)  = MOTHERS LINE NUMBER
*       (LINE,2)  = SEX
*       (LINE,3)  = GENERATION
*       (LINE,4)  = AGE
*
     DMM   MATM(49,4)
     DMM   MATP(7,5)
     INIT  ZERO=0,K1=1,K2=2,K3=3,K4=4,K5=5
```

```
*
     FILT  (10,C10,11,C11),CERR
*
** RANGE CHECKS FOR HOUSEHOLD CARD (CARD TYPE 10)
*
C10  NOP
     RANGE LINE=(0)
     RANGE INTDY=(01-31)
     RANGE INTMH=(03-06)
     RANGE INTYR=(74)
     RANGE RSLT1 TO RSLT4,FRSLT=(1-5,88)
     RANGE VISITS=(1-3)
     RANGE NPERS=(00-49)
     RANGE NELIG=(0-7)
     CPT   NMEMB=0
* INITIALIZE NUMBER OF PARTNERS WITH SAME COUPLE CODE IN PARTNERS MATRIX
* INITIALIZE MOTHERS LINE IN MOTHERS MATRIX
*
     CPT   COUNT=1
C10B ACT   MATP(COUNT,K1)=0
     CPT   COUNT=COUNT+1
     IFL   (COUNT.LE.7)  GOTO C10B
     CPT   COUNT=1
C10C ACT   MATM(COUNT,K1)=0
     CPT   COUNT=COUNT+1
     IFL   (COUNT.LE.49) GOTO C10C
     STOP
**
**
** RANGE CHECKS FOR HOUSEHOLD MEMBERS (CARD TYPE 11)
**
     RANGE LINE=(01-49)
     RANGE GENER=(1-7,9,88)
     RANGE COUPL=(1-7,9,88)
     RANGE MLINE=(01-49,88,99)
     RANGE JURE,FACTO,SEX=(1-2,9)
     RANGE AGE  =(00-95,99)
     RANGE SCHL,EMARR=(1-2,9,88)
     RANGE EDLEV=(1-4,9,88)
     RANGE EDGRA=(1-7,9,88)
     RANGE MARST=(1-4,9,88)
     RANGE ELIG =(1-2,88)
     RANGE IRSLT=(1-5,9,88)
**
** SKIP CHECKS
     DIFL  (EMARR.EQ.1) THEN (COUPL.NE.88)
            ELSE WRT 1100,LINE,EMARR,COUPL
     DIFL  (AGE.GE.5)  THEN (SCHL.NE.88)   ELSE WRT 1110,LINE,AGE,SCHL
     DIFL  (SCHL.EQ.1)  THEN (EDLEV.TO.EDGRA.NE.88)
            ELSE WRT 1120,LINE,SCHL,EDLEV,EDGRA
     DIFL  (SEX.EQ.2.AND.AGE.GE.15.AND.AGE.LT.50.AND.EMARR.EQ.1
           .AND.FACTO.EQ.1) THEN (ELIG.NE.88)
            ELSE WRT 1130,LINE,SEX,AGE,EMARR,FACTO,ELIG
     DIFL  (ELIG.EQ.1) THEN (IRSLT.NE.88) ELSE WRT 1140,LINE,ELIG,IRSLT
**
** MISC CONSISTENCY CHECKS
*  RESIDENCY
     IFL   (JURE.NE.1.AND.FACTO.NE.1) WRT 1150,LINE,JURE,FACTO
*
```

```
*  COULPE CODE
      IF    (COUPL.GT.6) GOTO ML1
      ASGN  COUPM=MATP(COUPL,K1)
      IF    (COUPM.EQ.1)  GOTO CC2
* STORE 1ST PARTNERS INFORMATION
      IFL   (COUPL.GT.1.OR.COUPL.GT.6)  GOTO CC3
CC1   ACT   MATP(COUPL,K1)=K1
      ACT   MATP(COUPL,K2)=SEX
      ACT   MATP(COUPL,K3)=GENER
      ACT   MATP(COUPL,K4)=MARST
      ACT   MATP(COUPL,K5)=MLINE
      GOTO  ML1
* CHECK PARTNERS INFORMATION
CC2   ACT   MATP(COUPL,K1)=K2
      ASGN  SEXP =MATP(COUPL,K2)
      ASGN  GENEP=MATP(COUPL,K3)
      ASGN  MARSP=MATP(COUPL,K4)
      ASGN  MLINP=MATP(COUPL,K5)
      IFL   (SEX.EQ.SEXP)       WRT 1160,LINE,COUPL
      IFL   (GENER.NE.GENEP)    WRT 1170,LINE,COUPL
      IFL   (MARST.NE.1.OR.MARSP.NE.1) WRT 1180,LINE,COUPL
      IFL   (MLINE.EQ.MLINP.AND.MLINE.NE.88)   WRT 1190,LINE,COUPL
      GOTO  ML1
* MORE THAN 2 MEMBERS WITH SAME COUPLE CODE
CC3   WRT   1200,LINE,COUPL
*
* STORE DATA IN MATRIX FOR LATER CHECKING OF MOTHERS
ML1   ACT   MATM(LINE,K1)=MLINE
      ACT   MATM(LINE,K2)=SEX
      ACT   MATM(LINE,K3)=GENER
      ACT   MATM(LINE,K4)=AGE
      IF    (LINE.NE.NPERS) GOTO ED1
*
* ALL MEMBERS OF HH PROCESSED. NOW CHECK MOTHERS
      CPT   NM=1
ML2   ASGN  MLINM=MATM(NM,K1)
      IFL   (MLINM.GE.88) GOTO ML3
      ASGN  SEXM =MATM(NM,K2)
      ASGN  GENEM=MATM(NM,K3)
      ASGN  AGEM =MATM(NM,K4)
      IFL   (SEXM.NE.2)       WRT 1210,LINE,MLINE,SEXM
      CPT   GEN=GENER+1
      IFL   (GENER.LT.5.AND.GENEM.LT.6) THEN (GEN.EQ.GENEM)
            ELSE WRT 1220,LINE,MLINE,GENER,GENEM
      CPT   AGEMM=AGE+14
      IFL   (AGEM.LT.AGEMM) WRT 1230,LINE,MLINE,AGE,AGEM
ML3   CPT   NM=NM+1
      IFL   (NM.LE.NPERS) GOTO ML2
*
* EDUCATION
ED1   IFL   (EDLEV.GT.3) GOTO ED2
      IFL   (EDLEV.EQ.1) CPT SCYR=0
      IFL   (EDLEV.EQ.2) CPT SCYR=5
      IFL   (EDLEV.EQ.3) CPT SCYR=12
      IFL   (EDGRA.LT.8) CPT SCYR=SCYR+EDGRA
      CPT   AGEMI=SCYR+5
      IFL   (AGE.LT.AGEMI) WRT 1240,LINE,AGE,EDLEV,EDGRA
ED2   NOP
*
      STOP
```

```
*
*  INVALID CARD TYPE
CERR WRT   1300,CARD
     STOP
*
*
*
*
     DICTE
* SKIPS
1100,2,LINE,EMARR,COUPL,'SKIP FOR COUPLE CODE WRONG'
1110,2,LINE,AGE,SCHL,   'SKIP FOR SCHOOLING WRONG'
1120,2,LINE,SCHL,EDLEV,EDGRA, 'SKIP FOR EDUC LEVEL AND GRADE WRONG'
1130,2,LINE,SEX,AGE,EMARR,FACTO,ELIG,'ELIGIBILITY INCONSISTENCY'
1140,2,LINE,ELIG,IRSLT,'ELIGIBILITY INCONSISTENT WITH RESULT'
* RESIDENCY
1150,2,LINE,JURE,FACTO,'NOT RESIDENT NORMALLY NOR LAST NIGHT'
* PARTNERS
1160,3,LINE,COUPL,'PARTNERS SEX SAME'
1170,3,LINE,COUPL,'PARTNERS GENERATION DIFFERENT'
1180,3,LINE,COUPL, RESP. OR PARTNER NOT MARRIED'
1190,3,LINE,COUPL,'PARTNER HAS SAME MOTHERS LINE'
1120,3,LINE,COUPL,'MORE THAN 2 MEMBERS WITH SAME COUPLE'
* MOTHER
1210,3,LINE,MLINE,SEXM,'MOTHER NOT FEMALE'
1220,3,LINE,MLINE,GENER,GEMEM,'MOTHER NOT NEXT GENERATION'
1230,3,LINE,MLINE,AGE,AGEM,'MOTHER LESS THAN 14 YEARS OLDER'
* EDUCATION
1240,2,LINE,AGE,EDLEV,EDGRA,'AGE LESS THAN SCHOOL YEARS+5'
* INVALID CARD
1300,2,CARD,'INVALID CARD TYPE'
     END
```

Sample printout from HHCONS run

```
ERROR  STATISTICS

  QUESTIONNAIRE NUMBER 001001

  ERROR #     V A R I A B L E S                                          D E S C R I P T I O N

  1110        LINE =5     AGE  =4     SCHL =2                            SKIP FOR SCHOOLING WRONG

      CT      COLUMNS
              ....*....1....*....2....*....3....*....4....*....5....*....6....*....7....*....8

      10      1000100100250474231   110511
      11      110010010131  1114012211
      11      110010010231  1123412311                    11
      11      11001001034 0212209113
      11      11001001044 0211106411
      11      11001001054 02111042


QUETIONNAIRE NUMBER 001003

  ERROR #     V A R I A B L E S

  9015        COUPL=8                                                    VARIABLE OUT OF RANGE
  9019        SEX  =88                                                   VARIABLE OUT OF RANGE
  1100        LINE =1     EMARR=88    COUPL=0                            SKIP FOR COUPLE CODE WRONG
  9015        COUPL=8                                                    VARIABLE OUT OF RANGE
  9019        SEX  =88                                                   VARIABLE OUT OF RANGE
  1100        LINE =2     EMARR=88    COUPL=0                            SKIP FOR COUPLE CODE WRONG
  9019        SEX  =88                                                   VARIABLE OUT OF RANGE
  9015        COUPL=8                                                    VARIABLE OUT OF RANGE
  1110        LINE =9     AGE  =2     SCHL =2                            SKIP FOR SCHOOLING WRONG

      CT      COLUMNS
              ....*....1....*....2....*....3....*....4....*....5....*....6....*....7....*....8

      10      1000100300260474232I  210911
      11      110010030118  11 852
      11      110010030228  11 702
      11      11001003033   21 51113
      11      110010030438  112462  12                    11
      11      11001003054 0411111115
      11      11001003064 0411110115
      11      11001003074 0411208113
      11      11001003084 04112052
      11      11001003095   212022
```

QUESTIONNAIRE NUMBER 001015

ERROR #	V A R I A B L E S			
1180	LINE =2	COUPL=1		RESP. OR PARTNER NOT MARRIED
1200	LINE =3	COUPL=1		MORE THAN 2 MEMBERS WITH SAME COUPLE
1200	LINE =4	COUPL=1		MORE THAN 2 MEMBERS WITH SAME COUPLE
1110	LINE =5	AGE =2	SCHL =2	SKIP FOR SCHOOLING WRONG
1110	LINE =6	AGE =1	SCHL =2	SKIP FOR SCHOOLING WRONG
9021	SCHL =4			

```
CT     COLUMNS
       ....*....1....*....2....*....3....*....4....*....5....*....6....*....7....*....8

10     10001015000205742522 1 310711
11     110010150131  111241111
11     110010150231  112161211                    11
11     110010150331  1112111311
11     110010150431  1225212311
11     11001015054 01111022
11     11001015064 03112012
11     11001015074 011111042
```

Extract Date Data and Run Date Edit

```
:FILE RAWDATA=COREIND4,OLD
:FILE EXTRFILE=COREDATE;REC=-1220,1,F,ASCII;ACC=OUT;DISC=15;SAVE
:FILE PRINTER=$STDLIST
:RUN EXTRACT
END OF DATA EXTRACTION
INDIVIDUALS PROCESSED:   7


END OF PROGRAM
:FILE EXTFILE=COREDATE,OLD
:FILE LINFILE=$STDLIST
:FILE PARFILE=$STDIN
:RUN DEIR


  RUN AT 10.14 ON 08/05/80                    WFS - STANDARD DATE EDIT/IMPUTATION PROGRAM          VERSION 1.0 1 DEC 78    PAGE 0001

INTL=0474,INTU=0674,DATA=1111,ERRS=1


SUMMARY OF PROGRAM PARAMETERS

FORMS OF DATA USED AND PRIORITY
  PRIORITY 1 = CALENDAR DATE        YEARS AGO             AGE OF RESP AT EVENT AGE OF CHILD AT INT
INTERVAL DATA IS NOT USED
INTERVIEW DATES ARE 04-74 TO 06-74
RESPONDENT'S AGE IS 15 TO 49 YEARS
BIRTH MINIMUM AGE IS 12 YEARS, MINIMUM INTERVAL IS 07 MONTHS
MARRIAGE MINIMUM AGE IS 12 YEARS, MINIMUM INTERVAL IS 00 MONTHS
AGE IS INTERPRETED AS COMPLETED YEARS
YEARS AGO ARE INTERPRETED AS COMPLETED YEARS
PREMARITAL BIRTHS ARE AVOIDED
NON-LIVE BIRTHS ARE NOT USED
ERROR CASES ARE PRINTED
THE RECODE FILE IS    NOT WRITTEN
```

```
RUN AT 11.06 ON 13/08/80                    WFS - STANDARD DATE EDIT/IMPUTATION PROGRAM          VERSION 1.0 1 DEC 78    PAGE 0002

                    INTER      RESP DATE UNCONSTRAINED -PREGN- -STERILISATION-          BREAST
                    DATE   DOI OF BIRTH  LOGICAL RANGE C DELIV DATE   AGO              -FEED- NUMBER
-IDENTIFICATION- MO YR  CMC MO YR AGE  MIN S  MAX S U MO YR MO YR MO YR AGE  DOS S LA  NE BI  MA

00100304         04 74 0892 88 88 46  0527 4 0428 4 2 88 88 88 88 88 88 88  9999   12  98 21  02

   -----DATE OF BIRTH----- S S          UNCONSTRAINED E --ADJUSTED--- E --ISOLATED--- E -NEIGHBORING- E  INTERVAL-  MIN.
   DATE    AGO  AG AG INTER E T DEATH DUR LOGICAL RANGE R LOGICAL RANGE R -CONSTRAINTS- R -CONSTRAINTS- R  FROM PREV  BIR.  MAX.
NO MO YR MO YR MO CH MO YR X A MO YR PRG  MIN S  MAX S R  MIN T  MAX T R  MIN T  MAX T R  MIN T  MAX T R   MIN  MAX  INT.  DOB.

01          30             1 1            0543 2 0444 2   0543   0444    1243 3 0444    1243   0444          0 9999    0  0474
02          28             1 2 03 00      0545 2 0446 2   0545   0446    0545   0446    0545   0146          7 9999    7  0174
03          27             1 2 00 00      0546 2 0447 2   0546   0447    0546   0447    0846   0447          7 9999    7  0474
04 00 49                   1 1            0149 1 1249 1   0149   1249    0149   1249    0149   0949          7 9999    7  0474
05 00 50                   2 1            0150 1 1250 1   0150   1250    0150   1250    0450   1250          7 9999    7  0474
06 00 52                   1 2 99 99      0152 1 1252 1   0152   1252    0152   1252    0152   1252          7 9999    7  0474
07 00 54                   2 2 01 00      0154 1 1254 1   0154   1254    0154   1254    0154   0454 2        7 9999    7  0374
08 00 55                   1 2 00 00      0155 1 1255 1   0155   1255    0155   1255    0155   1154 2 *      7 9999    7  0474
   99 53                   8 3       07
   99 53                   8 4       05
09 09 56                   1 1            0956 1 0956 1   0956   0956    0956   0956    0956   0656 2 *     19 9999   19  0474
10 01 57                   2 1            0157 1 0157 1   0157   0157    0157   0157    0457 1 0157   *      7 9999    7  0474
11 04 58                   2 1            0458 1 0458 1   0458   0458    0458   0458    0458   0458          7 9999    7  0474
12 09 59                   1 1            0959 1 0959 1   0959   0959    0959   0959    0959   0959          7 9999    7  0474
13 10 60                   2 1            1060 1 1060 1   1060   1060    1060   1060    1060   1060          7 9999    7  0474
   33 33                   2 1
14 05 61                   1 1            0561 1 0561 1   0561   0561    0561   0561    0561   0561          7 9999    7  0474
15 01 63                   1 1            0163 1 0163 1   0163   0163    0163   0163    0163   0163          7 9999    7  0474
16 03 64                   1 1            0364 1 0364 1   0364   0364    0364   0364    0364   0364          7 9999    7  0474
17 05 66                   2 1            0566 1 0566 1   0566   0566    0566   0566    0566   0566          7 9999    7  0474
18 05 69                   2 1            0569 1 0569 1   0569   0569    0569   0569    0569   0569          7 9999    7  0474

   ----DATE OF MARR.---- E T            UNCONSTRAINED E --ADJUSTED--- E --ISOLATED--- E -NEIGHBORING- E  INTERVAL-
   DATE    AGO      INTER N Y          LOGICAL RANGE R LOGICAL RANGE R -CONSTRAINTS- R -CONSTRAINTS- R  FROM PREV
NO MO YR MO YR AGE MO YR D P            MIN S  MAX S R  MIN T  MAX T R  MIN T  MAX T R  MIN T  MAX T R   MIN  MAX

01          30             2 1            0543 2 0444 2   0543   0444    0543   0543 6  0543   0543          0 9999
   00 62                                  0162 1 1262 1   0162   1262    0162   1262    0162   1262          0 9999
02 08 64                   3 1            0864 1 0864 1   0864   0864    0864   0864    0864   0864          0 9999
   05 70                                  0570 1 0570 1   0570   0570    0570   0570    0570   0570          0 9999

                    BIRTH 08 DATE OF BIRTH AND MINIMUM INTERVAL INCONSISTENT
                    BIRTH 09 DATE OF BIRTH AND MINIMUM INTERVAL INCONSISTENT
                    BIRTH 10 DATE OF BIRTH AND MINIMUM INTERVAL INCONSISTENT
```

```
                    INTER      RESP-DATE UNCONSTRAINED -PREGN- -STERILISATION-        BREAST
                    DATE   DOI OF BIRTH  LOGICAL RANGE C DELIV DATE   AGO            -FEED- NUMBER
-IDENTIFICATION- MO YR  CMC MO YR AGE  MIN S  MAX S U MO YR MO YR MO YR AGE  DOS S LA  NF BI  MA

00300102         04 74 0892 04 48 88  0448 1 0448 1 0 88 88 88 88 88 88  9999   12  12 09  01

   -----DATE OF BIRTH----- S S          UNCONSTRAINED E --ADJUSTED--- E --ISOLATED--- E -NEIGHBORING- E  INTERVAL-  MIN.
   DATE   AGO  AG AG INTER E T DEATH DUR LOGICAL RANGE R LOGICAL RANGE R -CONSTRAINTS- R -CONSTRAINTS- R  FROM PREV  BIR.  MAX.
NO MO YR MO YR MO CH MO YR X A MO YR PRG  MIN S  MAX S R  MIN T  MAX T R  MIN T  MAX T R  MIN T  MAX T R   MIN  MAX  INT.  DOB.

01 02 66                   2 2 01 00     0266 1 0266 1   0266   0266     0266   0266     0266   0266        0 9999     0  0374
02 05 67                   2 1           0567 1 0567 1   0567   0567     0567   0567     0567   0567        7 9999     7  0474
03 07 68                   1 2 00 00     0768 1 0768 1   0768   0768     0768   0768     0768   0768        7 9999     7  0474
   33 33                   1 2 00 00
04 09 69                   1 1           0969 1 0969 1   0969   0969     0969   0969     0969   0969        7 9999     7  0474
05 12 70                   1 1           1270 1 1270 1   1270   1270     1270   1270     1270   1270        7 9999     7  0474
06 06 72                   1 2 01 00     0672 1 0672 1   0672   0672     0672   0672     0672   0672        7 9999     7  0374
07 06 73                   1 1           0673 1 0673 1   0673   0673     0673   0673     0673   0673        7 9999     7  0474
08 06 74                   1 1           0674 1 0674 1   0448   0474 9 * 0448   0474     0174 1 0474        7 9999     7  0474

   ----DATE OF MARR.---- E T            UNCONSTRAINED E --ADJUSTED--- E --ISOLATED--- E -NEIGHBORING- E  INTERVAL-
   DATE   AGO      INTER N Y            LOGICAL RANGE R LOGICAL RANGE R -CONSTRAINTS- R -CONSTRAINTS- R  FROM PREV
NO MO YR MO YR AGE MO YR D P             MIN S  MAX S R  MIN T  MAX T R  MIN T  MAX T R  MIN T  MAX T R   MIN  MAX

01 05 65                   1 1           0565 1 0565 1   0565   0565     0565   0565     0565   0565        0 9999

                 BIRTH 08 DATE OF BIRTH NOT DEFINED


                    INTER      RESP DATE UNCONSTRAINED -PREGN- -STERILISATION-        BREAST
                    DATE   DOI OF BIRTH  LOGICAL RANGE C DELIV DATE   AGO            -FEED- NUMBER
-IDENTIFICATION- MO YR  CMC MO YR AGE  MIN S  MAX S U MO YR MO YR MO YR AGE  DOS S LA  NE BI  MA

00300402         04 74 0892 06 52 88  0652 1 0652 1 1 08 74 88 88 88 88 88  9999   98  88 01  01

   -----DATE OF BIRTH----- S S          UNCONSTRAINED E --ADJUSTED--- E --ISOLATED--- E -NEIGHBORING- E  INTERVAL-  MIN.
   DATE   AGO  AG AG INTER E T DEATH DUR LOGICAL RANGE R LOGICAL RANGE R -CONSTRAINTS- R -CONSTRAINTS- R  FROM PREV  BIR.  MAX.
NO MO YR MO YR MO CH MO YR X A MO YR PRG  MIN S  MAX S R  MIN T  MAX T R  MIN T  MAX T R  MIN T  MAX T R   MIN  MAX  INT.  DOB.

01 01 74                   2 1           0174 1 0174 1   0174   0174     0174   1173 4 * 0174   0174        0 9999     0  0474

   ----DATE OF MARR.---- E T            UNCONSTRAINED E --ADJUSTED--- E --ISOLATED--- E -NEIGHBORING- E  INTERVAL-
   DATE   AGO      INTER N Y            LOGICAL RANGE R LOGICAL RANGE R -CONSTRAINTS- R -CONSTRAINTS- R  FROM PREV
NO MO YR MO YR AGE MO YR D P             MIN S  MAX S R  MIN T  MAX T R  MIN T  MAX T R  MIN T  MAX T R   MIN  MAX

01 08 72                   1 1           0872 1 0872 1   0872   0872     0872   0872     0872   0872        0 9999

                 BIRTH 01 BIRTH NOT CONSISTENT WITH STER/PREG DATA
```

- - - - - - - S O U R C E S O F D A T A - - - - - -

- - - E V E N T - -	MONTH +YEAR	YEAR ONLY	MONTH +YEAR AGO	YEARS AGO	AGE MOTH.	AGE CHILD	INT MONTH +YEAR	INT YEAR	NOT GIVEN	TOTAL
RESPONDENT'S BIRTH	4	1	0	0	0	2	0	0	0	7
ALL BIRTHS	25	8	0	6	0	0	0	0	0	39
FIRST BIRTH	3	1	0	2	0	0	0	0	0	6
NEXT TO LAST BIRTH	3	2	0	0	0	0	0	0	0	5
LAST BIRTH	5	1	0	0	0	0	0	0	0	6
BEG OF ALL MARR.	7	2	0	1	0	0	0	0	0	10
END OF ALL MARR.	3	2	0	0	0	0	0	0	0	5
BEG OF FIRST MARR.	4	2	0	1	0	0	0	0	0	7
BEG OF CURR. MARR.	4	1	0	0	0	0	0	0	0	5

DISTRIBUTION OF FINAL LOGICAL RANGES (IN MONTHS)

- - - E V E N T - -	<-5	-5	-4	-3	-2	-1	0	1	2	3	4	5	6-10	11	>11	TOTAL
RESPONDENT'S BIRTH	0	0	0	0	0	0	4	0	0	0	0	0	0	3	0	7
ALL BIRTHS	0	0	0	2	1	0	23	0	0	2	1	0	7	3	0	39
FIRST BIRTH	0	0	0	0	0	0	4	0	0	0	1	0	1	0	0	6
NEXT TO LAST BIRTH	0	0	0	0	0	0	3	0	0	0	0	0	1	1	0	5
LAST BIRTH	0	0	0	0	0	0	4	0	0	1	0	0	0	1	0	6
BEG OF ALL MARR.	0	0	0	0	0	0	9	0	0	0	0	0	0	1	0	10
END OF ALL MARR.	0	0	0	0	0	0	3	0	0	0	0	0	0	2	0	5
BEG OF FIRST MARR.	0	0	0	0	0	0	6	0	0	0	0	0	0	1	0	7
BEG OF CURR. MARR.	0	0	0	0	0	0	4	0	0	0	0	0	0	1	0	5

DATE OF INTERVIEW OUT OF RANGE	0
RESPONDENT'S AGE > MAXIMUM	0
RESPONDENT'S AGE < MINIMUM	0
SOURCES OF RESPONDENT'S DOB INCONSISTENT	0
ERROR IN DATE OF STERILISATION	0
ERROR IN CURRENT PREGNANCY DATA	0
SOURCES OF DATE OF BIRTH INCONSISTENT	0
DATE OF BIRTH NOT DEFINED	1
DATE OF BIRTH AND INTERVAL DATA INCONSISTENT	0
DATE OF BIRTH > MAXIMUM POSSIBLE	0
BIRTH BEFORE MINIMUM AGE	0
FIRST BIRTH BEFORE MARRIAGE	0
BIRTH NOT CONSISTENT WITH STER/PREG DATA	1
DATE OF BIRTH AND MAXIMUM INTERVAL INCONSISTENT	0
DATE OF BIRTH AND MINIMUM INTERVAL INCONSISTENT	3
SOURCES OF DATE OF MARRIAGE INCONSISTENT	0
DATE OF MARRIAGE NOT DEFINED	0
MARRIAGE DATE AND INTERVAL DATA INCONSISTENT	0
MARRIAGE BEFORE MINIMUM AGE	0
MARRIAGE AFTER FIRST BIRTH	0
MARRIAGE DATE AFTER INTERVIEW	0
MARRIAGE DATE AND MAXIMUM INTERVAL INCONSISTENT	0
MARRIAGE DATE AND MINIMUM INTERVAL INCONSISTENT	0
QUESTIONNAIRES READ	7
QUESTIONNAIRES WITH ERRORS	3

Update for Date Errors

```
:FILE INPUT=COREIND4,OLD
:FILE OUTPUT=COREIND5,OLD
:FILE CARD=UPDIND4,OLD
:FILE PRINT=$STDLIST
:FILE PARM=$STDIN
:RUN UPDATE
```

```
#FS UPDATE PROGRAM VERSION 2 (MARCH 1979)

ID 03 08
CT 01 02
UC 80

THE ID STARTS FROM COL 03 WITH A FIELD LENGTH OF 08
THE CARD-TYPE STARTS FROM COL 01 WITH A FIELD LENGTH OF 02
THE UPDATE-CODE IS LOCATED IN COL 80

....*....1....*....2....*....3....*....4....*....5....*....6....*....7....*....8
4200100304        07                                          08                5   UPDATE CARD NO. 000001
4200100304095611  015721  045821  095911  106021  333321  056111  016311            (FIELD CORRECTION-BEFORE
4200100304095611  075721  045821  095911  106021  333321  086111  016311            (FIELD CORRECTION-AFTER)

....*....1....*....2....*....3....*....4....*....5....*....6....*....7....*....8
5100100304                          3                                             5   UPDATE CARD NO. 000002
5100100304011212  2     2102995371999535                                        301      (FIELD CORRECTION-BEFORE
5100100304011212  2     2102995371999533                                        301      (FIELD CORRECTION-AFTER)

....*....1....*....2....*....3....*....4....*....5....*....6....*....7....*....8
420030010204                                                                      5   UPDATE CARD NO. 000003
4200300102067411                                                                      (FIELD CORRECTION-BEFORE
4200300102047411                                                                      (FIELD CORRECTION-AFTER)

....*....1....*....2....*....3....*....4....*....5....*....6....*....7....*....8
5100300402        10                                                              5   UPDATE CARD NO. 000004
51003004022       1087432                                                       101      (FIELD CORRECTION-BEFORE
51003004022       1107432                                                       101      (FIELD CORRECTION-AFTER)

CARD-IMAGES DELETED =          000000
CARD-IMAGES REPLACED =         000000
CARD-IMAGES INSERTED =         000000
CARD-IMAGES FIELD CORRECTED =  000004
UPDATE CARDS IN ERROR =        000000
UPDATE CARDS FLUSHED =         000000
TOTAL NO UPDATE CARDS =        000004

NO OF RECORDS READ =           000070
NO OF RECORDS WRITTEN =        000070
```

correct birth dates for 10th and 14th live births

correct length of pregnancy for 2nd non-live birth.

Extract Date Data and Impute Missing Dates

```
:FILE RAWDATA=COREIND5,OLD
:FILE EXTRFILE=COREDATE
:FILE PRINTER=$STDLIST
:RUN EXTRACT

END OF DATA EXTRACTION
INDIVIDUALS PROCESSED:   7


:FILE EXTFILE=COREDATE,OLD
:FILE LINFILE=$STDLIST
:FILE PARFILE=$STDIN
:FILE RECFIL1=CORERE01,OLD
:RUN DEIR



  RUN AT 10.14 ON 08/05/80                    WFS - STANDARD DATF EDIT/IMPUTATION PROGRAM          VERSION 1.0 1 DEC 78    PAGE 0001

INTL=0474,INTU=0674,DATA=1111,ERRS=1,FILE=1,IMPM=1


SUMMARY OF PROGRAM PARAMETERS

FORMS OF DATA USED AND PRIORITY
  PRIORITY 1 = CALENDAR DATE        YEARS AGO            AGE OF RESP AT EVENT AGE OF CHILD AT INT
INTERVAL DATA IS NOT USED
INTERVIEW DATES ARE 04-74 TO 06-74
RESPONDENT'S AGE IS 15 TO 49 YEARS
BIRTH MINIMUM AGE IS 12 YEARS, MINIMUM INTERVAL IS 07 MONTHS
MARRIAGE MINIMUM AGE IS 12 YEARS, MINIMUM INTERVAL IS 00 MONTHS
AGE IS INTERPRETED AS COMPLETED YEARS
YEARS AGO ARE INTERPRETED AS COMPLETED YEARS
PREMARITAL BIRTHS ARE AVOIDED
NON-LIVE BIRTHS ARE NOT USED
ERROR CASES ARE PRINTED
THE RECODE FILE IS    WRITTEN
IMPUTATION METHOD IS MIDPOINT
```

RUN AT 10.14 ON 08/05/80 WFS - STANDARD DATE EDIT/IMPUTATION PROGRAM VERSION 1.0 1 DEC 78 PAGE 0003

- - - - - - - S O U R C E S O F D A T A - - - - - -

- - - E V E N T - -	MONTH +YEAR	YEAR ONLY	MONTH +YEAR AGO	YEARS AGO	AGE MOTH.	AGE CHILD	INT MONTH +YEAR	INT YEAR	NOT GIVEN	TOTAL
RESPONDENT'S BIRTH	4	1	0	0	0	2	0	0	0	7
ALL BIRTHS	25	8	0	6	0	0	0	0	0	39
FIRST BIRTH	3	1	0	2	0	0	0	0	0	6
NEXT TO LAST BIRTH	3	2	0	0	0	0	0	0	0	5
LAST BIRTH	5	1	0	0	0	0	0	0	0	6
BEG OF ALL MARR.	7	2	0	1	0	0	0	0	0	10
END OF ALL MARR.	3	2	0	0	0	0	0	0	0	5
BEG OF FIRST MARR.	4	2	0	1	0	0	0	0	0	7
BEG OF CURR. MARR.	4	1	0	0	0	0	0	0	0	5

RUN AT 10.14 ON 08/05/80 WFS - STANDARD DATE EDIT/IMPUTATION PROGRAM VERSION 1.0 1 DEC 78 PAGE 0004

DISTRIBUTION OF FINAL LOGICAL RANGES (IN MONTHS)

- - - E V E N T - -	<-5	-5	-4	-3	-2	-1	0	1	2	3	4	5	6-10	11	>11	TOTAL
RESPONDENT'S BIRTH	0	0	0	0	0	0	4	0	0	0	0	0	0	3	0	7
ALL BIRTHS	0	0	0	0	0	0	26	0	1	0	1	0	8	3	0	39
FIRST BIRTH	0	0	0	0	0	0	4	0	0	0	1	0	1	0	0	6
NEXT TO LAST BIRTH	0	0	0	0	0	0	3	0	0	0	0	0	1	1	0	5
LAST BIRTH	0	0	0	0	0	0	5	0	0	0	0	0	0	1	0	6
BEG OF ALL MARR.	0	0	0	0	0	0	9	0	0	0	0	0	0	1	0	10
END OF ALL MARR.	0	0	0	0	0	0	3	0	0	0	0	0	0	2	0	5
BEG OF FIRST MARR.	0	0	0	0	0	0	6	0	0	0	0	0	0	1	0	7
BEG OF CURR. MARR.	0	0	0	0	0	0	4	0	0	0	0	0	0	1	0	5

DATE OF INTERVIEW OUT OF RANGE	0
RESPONDENT'S AGE > MAXIMUM	0
RESPONDENT'S AGE < MINIMUM	0
SOURCES OF RESPONDENT'S DOB INCONSISTENT	0
ERROR IN DATE OF STERILISATION	0
ERROR IN CURRENT PREGNANCY DATA	0
SOURCES OF DATE OF BIRTH INCONSISTENT	0
DATE OF BIRTH NOT DEFINED	0
DATE OF BIRTH AND INTERVAL DATA INCONSISTENT	0
DATE OF BIRTH > MAXIMUM POSSIBLE	0
BIRTH BEFORE MINIMUM AGE	0
FIRST BIRTH BEFORE MARRIAGE	0
BIRTH NOT CONSISTENT WITH STER/PREG DATA	0
DATE OF BIRTH AND MAXIMUM INTERVAL INCONSISTENT	0
DATE OF BIRTH AND MINIMUM INTERVAL INCONSISTENT	0
SOURCES OF DATE OF MARRIAGE INCONSISTENT	0
DATE OF MARRIAGE NOT DEFINED	0
MARRIAGE DATE AND INTERVAL DATA INCONSISTENT	0
MARRIAGE BEFORE MINIMUM AGE	0
MARRIAGE AFTER FIRST BIRTH	0
MARRIAGE DATE AFTER INTERVIEW	0
MARRIAGE DATE AND MAXIMUM INTERVAL INCONSISTENT	0
MARRIAGE DATE AND MINIMUM INTERVAL INCONSISTENT	0
QUESTIONNAIRES READ	7
QUESTIONNAIRES WITH ERRORS	0

Recoding for Variables V001-V006, V401-V907

```
:FILE INPUT=COREINDS,OLD
:FILE OUTPUT=COREREO2,OLD
:FIL2 PRINTER=$STDLIST
:RUN RECODE



RECODED RECORDS WRITTEN:      7
```

Mergeing Two Parts of Recode File

```
:FILE FTN07=COREREO1,OLD
:FILE FTN08=COPEREO2,OLD
:FILE FTN09=COPESR,OLD
:RUN COMBINER



END OF STANDARD RECODE MERGE

RECORDS WRITTEN:      7
```

Tabulations for Country Report No. 1 Test Run on First Table

```
:COCENTS PARMR.D.EXP,LIBR.D.EXP,CORESR
```
— *specifies parameters file, library file, data file*

```
PBAOT
```
— *table selection from those specified in parameter file*

```
  COCENTS GENERATOR   4.0 08/1980
000000007 ************************************************
000000008 ************************************************
000000009 **                                            **
000000010 **  COCENTS PARAMETER FOR REPORT01            **
000000011 **              FOR EVER-MARRIED WOMEN SAMPLE **
000000012 ************************************************
000000013 ************************************************
000000014 **          CHANGE 'SPEC' ACCORDING TO        **
000000015 **                   YOUR RECODE FILE RECORD SIZE **
000000016 **                                            **
000000017      SPEC  UFST,TAPE,1,800
000000018 *
000000313 BAOT TABL  1.1.1
000000314      SCAL  0000
000000315      BASE  BALL
000000316      METR  X109
000000317      ROWV  V011,0001,0007,    ,    ,CURRENT AGE
000000318      CATL  0020,0001
000000319      COLV  V110,0001,0007
000000320      CATE  0010
000000321      LIBT  0074,0075,0080
000000322      LIBT  2700,    ,4320,4321
000000323      LIBF  7200,7201
**** 08 COCENTS GENERATED ****

GENERATED      ENDC
```

— *X109 is computed as V109 + 0.5 in the library file*

TABLE 1.1.1 PERCENT DISTRIBUTION OF ALL EVER-MARRIED WOMEN ACCORDING TO AGE AT FIRST MARRIAGE BY CURRENT AGE

CURRENT AGE	AGE AT FIRST MARRIAGE <15	15-17	18-19	20-21	22-24	25-29	30+	MEAN	TOTAL
<20	100.0	.0	.0	.0	.0	.0	.0	13.5	1
20-24	.0	.0	50.0	50.0	.0	.0	.0	20.0	2
25-29	.0	100.0	.0	.0	.0	.0	.0	17.5	1
30-34	.0	100.0	.0	.0	.0	.0	.0	17.5	1
35-39	.0	.0	.0	.0	.0	.0	.0	.0	-
40-44	.0	.0	.0	.0	.0	.0	100.0	31.5	1
45+	.0	100.0	.0	.0	.0	.0	.0	15.5	1
TOTAL	14.3	42.9	14.3	14.3	.0	.0	14.3	19.4	7

** THE MEAN IS COMPUTED AS EXACT YEARS(COMPLETED YEARS + 0.5) **

Sampling Errors with Clusters Program

```
:FILE FTN05=CLUSTC,OLD;ACC=IN
:FILE FTN15=KSUMS,NEW;TEMP;REC=616,1,F;DISC=6000,16,16;DEV=TEMP
:FILE FTN14=KFNTRL,NEW;DEV=TEMP;TEMP
:FILE FTN13=CORESR,OLD;DEV=DISC;ACC=IN;SHR
:FILE FTN06=$STDLIST;REC=-133
:RUN CLUSTIP


                *CLUSTERS(1)  2.0*        1/1980
            * PROGRAM CONTROL CARDS *

TITL      SAMPLING ERRORS FROM DP GUIDELINES TEST DATA FOR CORE QUESTI
FORM   7  (T17,I2,4I4,10X,T2,2X,T2,
           T131,I2,2X,I2,2X,2I2,2X,2I2,10X,3I2,10X,I2,2X,I2,
           T431,I2,2X,I2,8X,I2,18X,I2,2X,I2,4X,I2,2X,I2,2X,I2,2X,3I2,
           T501,I2,2X,I2,2X,I2,T515,3I2,
           T527,3I2,2X,2I2,2X,I2,2X,I2,2X,T2,
           T551,2I2,26X,4I2,26X,2I2,4X,3I2,4X,I2,2X,I2,
           T641,2I2,2X,4I2,T673,I2)
PROB    63   14   37    0    0    4    0    3    0    2    0    5    0    1    1
FACT              .00100   10  990    0
CLAS    RESU      1RESR      1
RECO     1    0    0    0    0    0   58    0    1    0    0    0    0    0    0
RECO     1    0    0    0    0    0   58    2    2    0    0    0    0    0    0
CLAS    EDOO      1EDO4      1
RECO     1    0    0    1    0   59    0    0    0    0    0    0    0    0    0
RECO     1    0    0    0    0    0   59    1    4    0    0    0    0    0    0
CLAS    EDO8      1ED15      1
RECO     1    0    0    0    0    0   59    5    8    0    0    0    0    0    0
RECO     1    0    0    0    0    0   59    9   15    0    0    0    0    0    0
CLAS    LIT       1NLIT      1
RECO     1    0    0    0    0    0   60    1    1    0    0    0    0    0    0
RECO     1    0    0    0    0    0   60    2    2    0    0    0    0    0    0
CLAS    REL1      1REL2      1
RECO     1    0    0    0    0    0   61    1    1    0    0    0    0    0    0
RECO     1    0    0    0    0    0   61    2    2    0    0    0    0    0    0
CLAS    REL3      1REL4      1
RECO     1    0    0    0    0    0   61    3    3    0    0    0    0    0    0
RECO     1    0    0    0    0    0   61    4    4    0    0    0    0    0    0
CLAS    HOC1      1HOC2      1
RECO     1    0    0    0    0    0   62    1    1    0    0    0    0    0    0
RECO     1    0    0    0    0    0   62    2    2    0    0    0    0    0    0
CLAS    HOC3      1HOC4      1
RECO     1    0    0    0    0    0   62    3    3    0    0    0    0    0    0
RECO     1    0    0    0    0    0   62    4    4    0    0    0    0    0    0
CLAS    AG24      1AG34      1
RECO     1    0    0    0    0    0    6   10   24    0    0    0    0    0    0
RECO     1    0    0    0    0    0    6   25   34    0    0    0    0    0    0
CLAS    AG44      1AG49      1
RECO     1    0    0    0    0    0    6   35   44    0    0    0    0    0    0
RECO     1    0    0    0    0    0    6   45   49    0    0    0    0    0    0
CLAS    YM04      1YM09      1
RECO     1    0    0    0    0    0   16    0    4    0    0    0    0    0    0
RECO     1    0    0    0    0    0   16    5    9    0    0    0    0    0    0
```

Explanation of subclass definition:
V702 (type of residence) is 58th variable defined on FORM statement.

Subclass pair is:
V702 = 0,1 (Urban)
V702 = 2 (Rural)

```
CLAS    YM19      1Y439      1
RECO     1    0    0    0    0    0   16   10   19    0    0    0    0    0    0
RECO     1    0    0    0    0    0   16   20   39    0    0    0    0    0    0
CLAS    AM19      1AM49      1
RECO     1    0    0    0    0    0   13   10   19    0    0    0    0    0    0
RECO     1    0    0    0    0    0   13   20   49    0    0    0    0    0    0
CLAS    CM23      1CM24      1
RECO     1    0    0    0    0    0   20    0    3    0    0    0    0    0    0
RECO     1    0    0    0    0    0   20    4   24    0    0    0    0    0    0
VARI  CURM    0    1    1    1    0    0    0    0    0    0    0    0    0    0
RECO     1    0    0    1    1   12   12    2    0  100    1    0    0    0    0
VARI  EXPD    0    2  199999    0    0    0    0    0    0    0    0    0    0
RECO     1    9    1    0    0    0   34    0    1    0    0    0    0    0    0
RECO     4   -1    1    1    0    0   34    9  100    0    0    0    0    0    0
VARI  MDTS    0    1    1    1    0    0    0    0    0    0    0    0    0    0
RECO     1    0    0    1    1   10   10    2    0  100    1    0    0    0    0
VARI  REMA    0    1    1    1    0    0    0    0    0    0    0    0    0    0
RECO     1    0    0    1    1   11   11    2    0  100    1    0    0    0    0
VARI  NMAR    0    2  199999    0    0    0    0    0    0    0    0    0    0
RECO     1    0    0    0    0    0    8    1    8    0    0    0    0    0    0
RECO     3   -1    1    0    0    0    8    0    0    0    0    0    0    0    0
VARI  AGEH    0    3  199999    0    0    0    0    0    0    0    0    0    0
RECO     1    0    0    0    0    0   13   10   24    0    0    0    0    0    0
RECO     1   -1    1    0    0    0    6   25   49    0    0    0    0    0    0
RECO     3   -1    1    0    0    0   13    0    0    0    0    0    0    0    0
VARI  DURM    0    2  199999    0    0    0    0    0    0    0    0    0    0
RECO     1    0    0    0    0    0   14    0  500    0    0    0    0    0    0
RECO     4   -1    1    1    0    0   14  999  100    0    0    0    0    0    0
VARI          0    2  199999    0    0    0    0    0    0    0    0    0    0
RECO     1    0    0    0    0    0   15    0  500    0    0    0    0    0    0
RECO     3   -1    1    0    0    0   15    0    0    0    0    0    0    0    0
VARI  CURP    0    2  199999    0    0    0    0    0    0    0    0    0    0
RECO     1   12    1    0    0    0   19    0    1    0    0    0    0    0    0
RECO     4   -1    1    1    0    0   19  100    0    0    0    0    0    0    0
VARI  NCEB    0    2  199999    0    0    0    0    0    0    0    0    0    0
RECO     1    0    0    0    0    0   20    0   24    0    0    0    0    0    0
RECO     3   -1    1    0    0    0   20    0    0    0    0    0    0    0    0
VARI  NULC    0    2  199999    0    0    0    0    0    0    0    0    0    0
RECO     1    0    0    0    0    0   21    0   24    0    0    0    0    0    0
RECO     3   -1    1    0    0    0   21    0    0    0    0    0    0    0    0
VARI  NCRS    0    2  199999    0    0    0    0    0    0    0    0    0    0
RECO     1   17    1    0    0    0   22    0    8    0    0    0    0    0    0
RECO     3   -1    1    0    0    0   22    0    0    0    0    0    0    0    0
VARI  NLCS    0    2  199999    0    0    0    0    0    0    0    0    0    0
RECO     1   18    1    0    0    0   23    0    8    0    0    0    0    0    0
RECO     3   -1    1    0    0    0   23    0    0    0    0    0    0    0    0
VARI  FBIN    0    2  199999    0    0    0    0    0    0    0    0    0    0
RECO     1   27    1    0    0    0   24    0   59    0    0    0    0    0    0
RECO     3   -1    1    0    0    0   24    0    0    0    0    0    0    0    0
VARI  LBIN    0    2  199999    0    0    0    0    0    0    0    0    0    0
RECO     1   28    1    0    0    0   25    6   59    0    0    0    0    0    0
RECO     3   -1    1    0    0    0   25    0    0    0    0    0    0    0    0
VARI  OBIN    0    2  199999    0    0    0    0    0    0    0    0    0    0
RECO     1   35    1    0    0    0   26    0  500    0    0    0    0    0    0
RECO     3   -1    1    0    0    0   26    0    0    0    0    0    0    0    0
VARI  RFLI    0    3  199999    0    0    0    0    0    0    0    0    0    0
RECO     1    0    0    1    1   30   30    0   76    1   98    0    0    0    0
RECO     1   28    1    0    0    0   -1    1    1    0    0    0    0    0    0
RECO     3   -1    1    1    0   30   30    0   98    0    0    0    0    0    0
```

Explanation of one variable definition:
CURM is to represent % currently married and is defined using one RECO type 1 statement. Cases with CURM = 1 are excluded.
Recoding is as follows:

CURM = 100 if V108 = 1 (currently married)
= 1 if V108 ⩾ 2 (illegal codes)
= 0 otherwise (not currently married)

V108 (whether currently married) is the 12th variable defined on the FORM statement.

```
VARI  BFL2    0    3   199999    0    0    0    0    0    0    0    0    0    0
RECO     1   32    1    0    0    0   31    1   11    0    0    0    0    0    0
RECO     1   28    1    0    0    0   -1    1    1    0    0    0    0    0    0
RECO     3   -1    1    1    0   30   30    0   98    0    0    0    0    0    0
VARI  DEAD    0    3   199999    0    0    0    0    0    0    0    0    0    0
RECO     1    0    0    0    0    0   21    0   24    0    0    0    0    0    0
RECO     1   -1    1    0    0    0   20    0   24    0    0    0    0    0    0
RECO     4   -1    1    2    0    0   20   99  100   21   99 -100    0    0    0
VARI        20    0    0    0    0    0    0    0    0    0    0    0    0    0
VARI  LCAD    0    2   199999    0    0    0    0    0    0    0    0    0    0
RECO     1   27    1    0    0    0   39    0    1    0    0    0    0    0    0
RECO     4   -1    1    1    0    0   39   99  100    0    0    0    0    0    0
VARI  NMCU    0    2   199999    0    0    0    0    0    0    0    0    0    0
RECO     1   33    1    0    0    0   36    0    1    0    0    0    0    0    0
RECO     4   -1    1    1    0    0   36   99  100    0    0    0    0    0    0
VARI  PNEB    0    2   199999    0    0    0    0    0    0    0    0    0    0
RECO     1   38    1    0    0    0   40    0    1    0    0    0    0    0    0
RECO     4   -1    1    1    0    0   40   99  100    0    0    0    0    0    0
VARI  FECO    0    1    1    1    0    0    0    0    0    0    0    0    0    0
RECO     1    0    0    1    1   43   43    4    0  100    1    0    0    0    0
VARI  NACO    0    3   199999    0    0    0    0    0    0    0    0    0    0
RECO     1    0    0    1    1   41   41    0   21    1   66    0    0    0    0
RECO     1   33    1    0    0    0   -1    1    1    0    0    0    0    0    0
RECO     3   -1    1    1    0   41   41   -1   66    0    0    0    0    0    0
VARI  NTCO    0    2   199999    0    0    0    0    0    0    0    0    0    0
RECO     1   12    1    0    0    0   42    0   21    0    0    0    0    0    0
RECO     3   -1    1    0    0    0   42    0    0    0    0    0    0    0    0
VARI  KPIL    0    1    1    1    0    0    0    0    0    0    0    0    0    0
RECO     1    0    0    2    2   44   44    3    0  100    1    2    0    0    0
VARI  KANY    0    1    1    1    0    0    0    0    0    0    0    0    0    0
RECO     1    0    0    1    1   47   47    2    0  100    1    0    0    0    0
VARI  KEFF    0    2    1    1    0    0    0    0    0    0    0    0    0    0
RECO     1    0    0    1    1   46   46    4    0  100    3    0    0    0    0
RECO     3    0    0    1    0   46   -1    1    0    0    0    0    0    0    0
VARI  UPIL    0    1    1    1    0    0    0    0    0    0    0    0    0    0
RECO     1    0    0    1    1   48   48    2    0  100    1    0    0    0    0
VARI  UANY    0    1    1    1    0    0    0    0    0    0    0    0    0    0
RECO     1    0    0    1    1   51   51    2    0  100    1    0    0    0    0
VARI  UEFF    0    2    1    1    0    0    0    0    0    0    0    0    0    0
RECO     1    0    0    1    1   50   50    4    0  100    3    0    0    0    0
RECO     3    0    0    1    0   50   -1    1    0    0    0    0    0    0    0
VARI  UDIN    0    2   299999    1    0    0    0    0    0    0    0    0    0
RECO     1    0    0    2    2   56   56    4    0  100    1    2    0    0    0
RECO     3   35    1    1    0   56   -1    1    0    0    0    0    0    0    0
VARI  UCIN    0    2   299999    1    0    0    0    0    0    0    0    0    0
RECO     1    0    0    1    1   55   55    3    0  100    1    0    0    0    0
RECO     3   28    1    1    0   55   -1    1    0    0    0    0    0    0    0
VARI  UCUR    0    2   199999    0    0    0    0    0    0    0    0    0    0
RECO     1   34    1    0    0    0   52    0    1    0    0    0    0    0    0
RECO     4   -1    1    1    0    0   52    9  100    0    0    0    0    0    0
VARI  UCE1    0    2   199999    0    0    0    0    0    0    0    0    0    0
RECO     1   34    1    0    0    0   53    0    1    0    0    0    0    0    0
RECO     4   -1    1    1    0    0   53    9  100    0    0    0    0    0    0
VARI  UCE2    0    2   199999    0    0    0    0    0    0    0    0    0    0
RECO     1   37    1    0    0    0   54    0    1    0    0    0    0    0    0
RECO     4   -1    1    1    0    0   54    9  100    0    0    0    0    0    0
DOMA        REGIONS        4    1    2    3    4    0    0    0    0    0    0

MAX CORE USED =   5667 MAX CORE AVAILABLE =  10000
```

output from program (details of sample)

```
                                   SAMPLE DETAILS
        READ   AREA CARD FIELDS                    USED                          NO.
        AREA  PSU  STR  DOM  WGT        AREA  PSU  STR  DOM   WGT             OBS.
 AREA     1    0    0    0    0           1    1    1    1   1.00000            3
 AREA     2    0    0    0    0           2    2    1    1   1.00000            2
 AREA     3    0    0    0    0           3    3    1    1   1.00000            2

 NUMBER OF OBSERVATIONS =          7 NUMBER OF THESE WITH ERRORS =          0


:FILE INPUT=KSUMS,OLDTEMP;DEV=TEMP;DEL
:FILE OUTPUT=KAREA,NEW;TEMP;RFC=616,1,F;DISC=6000,16,16;DEV=TEMP
:FILE TEXT=CLSTSORT.PUB.PROC,OLD;DEV=DISC;ACC=IN;SHR
:FILE SORTSCR;DEV=TEMP
:RUN SORT

 HP32148.02.00 SORT/3000 FRI, MAY  9, 1980,  6:50 PM
 (C) HEWLETT-PACKARD CO. 1978


 KEY 1,8,BYTE
 KEY 9,8,BYTE
 KEY 17,8,BYTE
 KEY 25,8,BYTE
 END

                        STATISTICS

 NUMBER OF RECORDS =                                  46
 NUMBER OF INTERMEDIATE PASSES =                       0
 SPACE AVAILABLE (IN WORDS) =                     12,363
 NUMBER OF COMPARES =                                261
 NUMBER OF SCRATCHFILE IO'S =                        454
 CPU TIME (MINUTES) =                                .02
 ELAPSED TIME (MINUTES) =                            .11
 RECORD SIZE (IN BYTES) =                          1,232
 SCRATCH FILE SIZE (# SECTORS) =                     264
```

```
FILE FTN14=KCNTRL,OLDTEMP;DEV=TEMP;DEL
FILE FTN13=KAREA,OLDTEMP;DEV=TEMP;DEL
FILE FTN04=$NULL
FILE FTN06=$STDLIST;REC=-133
RUN CLUST2P
```

First page of printout of sampling error satisfies.

DOMAIN 1 REGIONS

	R	SE	N	WN	SER	SD	DEFT	ROH	SE/R	R-2SE	R+2SE	B
CURM	71.429	12.745	7.0	7.0	18.443	48.795	.691	****	.178	45.939	96.918	2.3
EXPD	.000	.000	7.0	7.0	.000	.000	.000	****	.000	.000	.000	2.3
MDIS	42.857	25.490	7.0	7.0	20.203	53.452	1.262	****	.595	-8.122	93.837	2.3
REMA	66.667	19.245	3.0	3.0	33.333	57.735	.577	****	.289	28.177	105.157	1.0
NMAR	1.429	.255	7.0	7.0	.297	.787	.857	****	.178	.919	1.938	2.3
AGEM	16.333	.385	3.0	3.0	.667	1.155	.577	****	.024	15.564	17.103	1.0
DURM	6416.666	1771.553	7.0	7.0	2332.384	6170.908	.760	****	.276	2873.560	9959.773	2.3
CURP	.000	.000	5.0	5.0	.000	.000	.000	****	.000	.000	.000	1.7
NCEB	5.857	1.427	7.0	7.0	2.473	6.543	.577	****	.244	3.004	8.710	2.3
NULC	4.286	1.102	7.0	7.0	1.755	4.645	.628	****	.257	2.082	6.490	2.3
NCB5	3.250	.962	4.0	4.0	.854	1.708	1.127	****	.296	1.326	5.174	1.3
NLC5	2.333	1.333	3.0	3.0	1.333	2.309	1.000	****	.571	-.333	5.000	1.0
FBIN	.000	.000	.0	.0	.000	.000	.000	****	.000	.000	.000	.0
LBIN	.000	.000	.0	.0	.000	.000	.000	****	.000	.000	.000	.0
OBIN	.000	.000	.0	.0	.000	.000	.000	****	.000	.000	.000	.0
BFL1	.000	.000	.0	.0	.000	.000	.000	****	.000	.000	.000	.0
BFL2	.000	.000	.0	.0	.000	.000	.000	****	.000	.000	.000	.0
DEAD	26.829	4.907	7.0	7.0	4.650	12.304	1.055	****	.183	17.015	36.643	2.3
LCND	.000	.000	.0	.0	.000	.000	.000	****	.000	.000	.000	.0
NMCD	.000	.000	.0	.0	.000	.000	.000	****	.000	.000	.000	.0
PREB	.000	.000	.0	.0	.000	.000	.000	****	.000	.000	.000	.0
FECD	.000	.000	7.0	7.0	.000	.000	.000	****	.000	.000	.000	2.3
NACD	.000	.000	.0	.0	.000	.000	.000	****	.000	.000	.000	.0
NTCD	.000	.000	5.0	5.0	.000	.000	.000	****	.000	.000	.000	1.7
KPIL	.000	.000	7.0	7.0	.000	.000	.000	****	.000	.000	.000	2.3
KANY	.000	.000	7.0	7.0	.000	.000	.000	****	.000	.000	.000	2.3
KEFF	.000	.000	.0	.0	.000	.000	.000	****	.000	.000	.000	.0
UPIL	.000	.000	7.0	7.0	.000	.000	.000	****	.000	.000	.000	2.3
UANY	.000	.000	7.0	7.0	.000	.000	.000	****	.000	.000	.000	2.3
UEFF	.000	.000	.0	.0	.000	.000	.000	****	.000	.000	.000	.0
UOIN	.000	.000	.0	.0	.000	.000	.000	****	.000	.000	.000	.0
UCIN	.000	.000	.0	.0	.000	.000	.000	****	.000	.000	.000	.0
UCUR	.000	.000	.0	.0	.000	.000	.000	****	.000	.000	.000	.0
UCE1	.000	.000	.0	.0	.000	.000	.000	****	.000	.000	.000	.0
UCE2	.000	.000	.0	.0	.000	.000	.000	****	.000	.000	.000	.0

WORLD FERTILITY SURVEY

BASIC DOCUMENTATION

1. Core Questionnaires
2. Survey Organization Manual
3. Manual on Sample Design
4. Training Manual
5. Supervisors' Instructions
6. Interviewers' Instructions
7. Editing and Coding Manual
8. Guidelines for Country Report No. 1
9. Strategies for the Analysis of WFS Data
10. Modifications to the WFS Core Questionnaires and Related Documents
11. Data Processing Guidelines

Printed by Reedprint Ltd Windsor Berkshire