BIBLIOGRAPHIC DATA SHEET	1. CONTROL NUMBER PN-AAJ-712	2. SUBJECT CLASSIFICATION (695) AP00-0000-G320

3. TITLE AND SUBTITLE (240)

Woodfuel production and conversion to energy in the Dominican Republic: a research and development plan

4. PERSONAL AUTHORS (100)

Hoekstra, P. E.; Chatterjee, A. K.

5. CORPORATE AUTHORS (101)

USDA/FS/SEA Biomass for Energy Team

6. DOCUMENT DATE (110)	7. NUMBER OF PAGES (120)	8. ARC NUMBER (170)
1981	69p.	DR662.65.H693

9. REFERENCE ORGANIZATION (130)

USDA/FS

10. SUPPLEMENTARY NOTES (500)

11. ABSTRACT (950)

12. DESCRIPTORS (920)

Dominican Rep.
Wood products
Fuelwood
Energy
Conversion
Research
Production capacity
Electric power generation
Trees
Charcoal
Development strategy
Alternative energy
Biomass
Thermochemistry

13. PROJECT NUMBER (150)

936570900

14. CONTRACT NO.(140)

PA/AG/DSB-5709-6-79

15. CONTRACT TYPE (140)

16. TYPE OF DOCUMENT (160)

AID 590-7 (10-79)

DR
6-6-2 6-5
H6-93

PN-AAF-212

WOODFUEL PRODUCTION AND CONVERSION TO ENERGY IN THE DOMINICAN REPUBLIC

A Research and Development Plan

Submitted To

USDA FS/SEA BIOMASS FOR ENERGY TEAM

And

OFFICE OF ENERGY

BUREAU FOR SCIENCE AND TECHNOLOGY

AGENCY FOR INTERNATIONAL DEVELOPMENT
PASA NO. AG/DSB-5709-6-79

July 1981

P. E. Hoekstra, Forest Service, USDA
A. K. Chatterjee, Engineering Consultant

TABLE OF CONTENTS

PAGE

List of Tables. 2

List of Figures 2

Executive Summary 3

Introduction. 5

Research and Development. 6

Expected Results. 7

Woody biomass Production. 8

- Sequence of Events. 13
- Project Costs 14
- Technical Assistance. 15
- Training Plan 16
- References. 17

Thermochemical Conversion of Wood 18

- Background of Charcoal Making 23
- Charcoal Kiln Test & Demonstration Program. 28
- Project Costs 38
- Technical Assistance. 39
- Training Plan 39
- References. 42

Contacts. 56

Appendix. 57

- Tree Seed 57
- Wood to Electricity Conversion. 58
- Case Study I. 61
- Case Study II 62
- Quote from Cable. 63
- Quote from PID. 65

LIST OF TABLES

TABLE		PAGE
1	Biomass Thermochemical Conversion Processes.	.43
2	Ranking of Biomass Conversion Processes.	.44
3.	Charcoal Produced at Different Temperatures.	.45
4.	Hardwood Distillation Products	.46
5	General Properties of Charcoal	.47
6	Charcoal Making Demonstration Program.	.48

LIST OF FIGURES

FIGURE		Page
1	Brick Beehive Kilns.	.49
2	Metal Kiln	.50
3	"Missouri" Kiln.	.51
4	Nichols-Herreshoff Furnace	.52
5	Briquetting Flow Diagram	.53
6	Steam Turbine Power Generation	.54
7	Power Generation	.55

EXECUTIVE SUMMARY

In response to a request from AID/Santo Domingo the USDA Forest Service/ Science and Education Administration Biomass for Energy Team sent a forester and engineer to the Dominican Republic from June 19 to July 10, 1981, to (a) develop a research methodology for testing tree species which could be grown from fuel, and (b) design a program of research, testing and demonstration of wood conversion technologies for energy products. The project is to last 5 years.

This report proposes that fuelwood production research and development will include primary and secondary species trials on 3 sites, spacing trials, trials of planting methods, coppicing cycles and rotations, harvesting and transportation, as well as seed handling and nursery production tests. Parallel to the testing program, planting 300 hectares is proposed in order to gain experience in the logistics of large scale planting of energy plantations.

Wood conversion technologies recommended for testing and demonstration include charcoal manufacture at small, medium and large scale, and wood gasification for generation of electricity. Practical experience is to be gained by building, testing, and operating a portable metal charcoal kiln, a brick beehive kiln and a large Missouri type kiln. Operating parameters will be determined with wood of a number of tree species for each type of kiln. After about 3 years into the project a wood gasifier should be installed for test and demonstration purposes.

For both project components detailed costs are presented as well as plans for technical assistance and host country participant training. Proposed total project costs of US $1,582,000 are divided with $734,000 for fuelwood production and $848,000 for conversion.

WOODFUEL PRODUCTION AND CONVERSION TO ENERGY IN THE DOMINICAN REPUBLIC

Introduction

This report is in response to a request from USAID/Santo Domingo to "Develop in detail, along with Mission, ISA and Energy Commission Staff, a research methodology for testing the performance and requirements of different tree species which could be grown for wood fuel" and "To design a program for research, testing and demonstration of different wood conversion technologies which could eventually be utilized on a wide scale." For the full text of the cabled request regarding a wood fuel development program see Appendix page 63.

Decisions regarding the opportunities for using wood as an alternative source of energy and the need for a research and development program in growing and converting wood for energy had already been made before the request for technical assistance was sent out. Background information on these matters can be found in the relevant section of the P.I.D. (see Appendix page 65) and references 2, 5, 6, 9, and 11 (page 18).

Preliminary discussions with USAID/Santo Domingo and Energy Commission Staff determined that priority should be given to charcoal manufacture and generation of electricity from woodfuel. The research and development program for both fuelwood production and conversion should aim for a total expenditure of $1.5 million.

Research and Development

The Dominican Republic has no experience in tree planting on more than a few hundred hectares per year. Experience in planting hardwoods is almost nil. Charcoal manufacture is by the earth kiln method. Metal or brick kilns are not known, nor is generating electricity from wood as feedstock. Before an action program of establishing fuelood plantations and converting wood to energy products can be undertaken, some preliminary work is needed:

- Determining the fastest-growing tree species over a range of sites.
- Gaining experience in the logistics of a large scale tree planting program.
- Testing of efficient methods of converting wood to energy products.
- Training Dominican Republic personnel in all of the above.

Such a research and development program will require the following:

- Establishment of a tree nursery and production of up to 200,000 seedlings annually for 5 years.
- Establishment of 30-100 hectares of plantations annually for 5 years.
- Tests of harvesting and transportation in years 4 and 5.
- Tests and demonstration of improved charcoal kilns.
- Tests and demonstration of electric generators fueled by wood from plantations.
- Full time and intermittent technical assistance in such specialties as forestry, statistical analysis, thermo-chemical conversion to energy and others.

- Training of Dominican Republic nationals in the US and elsewhere in selected subjects. Training may be academic or practical.
- Selected items of testing and demonstration equipment.

Expected results

Project results are expected to be:

- Reliable data on optimal biomass production in terms of volume as well as ovendry weight per hectare by tree species, site quality, and spacing. These data will allow prediction of area required in energy plantations for a given product requirement.
- Data upon which to base financial and economic analyses of growing fuelwood.
- Nursery methods and planting techniques adapted to large scale planting operations.
- Optimum harvest cycles by species, site, and spacing, matched to desired product size, and harvesting system.
- A significant increase in the number of foresters and sub-professionals trained in woody biomass production in the Dominican Republic.
- Reliable performance and cost data on small, medium, and large scale charcoal production.
- Performance data on generating electricity through gasification of wood.
- A significant increase in the number of engineers and sub-professionals trained in conversion of woody biomass to energy.

Technical Analysis

The research and development project has 2 components: (A) Woody biomass production, and (B) conversion of woody biomass to energy products. The recently established Comision Nacional de Politica Energetica coordinates all activities in the Dominican Republic that deal with energy, including this project for wood fuel development. Through the Comision, the project will be implemented by the Instituto Superior de Agricultura (ISA), a center for teaching and research in agricultural sciences located in Santiago. Near Mao, ISA owns some 2000 hectares of land available for tree planting and testing conversion technologies. It is rolling lowland "dry forest" covered with thorny shrubs and scattered small trees. The land is submarginal for agriculture and receives 600-900 mm of precipitation per year.

A. WOODY BIOMASS PRODUCTION

The testing program will include main and secondary species trials, spacing trials, nursery production methods, site preparation comparisons, planting methods, site comparisons, volume determinations, development of green weight/oven dry weight ratio's, harvesting and transportation systems.

a. Main species trial

Five species were selected for testing on the basis of some or all of the following: characteristics as firewood and for charcoal manufacture; fast growth in their native habitat and elsewhere; good performance in semi-arid conditions; ability to grow in a saline environment.

- Leucaena leucocephala. This species is native to the Dominican Republic. For the trial, however, the "Hawaian Giant" selection K-8 should be used.

- Eucalyptus camaldulensis. This species adapts to a wide range of site conditions and is one of the 2 most widely planted Eucalyptus species around the world.

- Azadiracta indica or neem. This species survives 120°F temperatures and rainfall as low as 400 mm/year with an 8 month dry season.

- Casuarina equisetifolia. This species was chosen for its ability to grow under conditions of low fertility and rainfall as well as salty environment. It yields excellent firewood and charcoal.

- Prosopis juliflora or cambron. This is a native species proven in the DR and is chosen to serve as the standard species in all trials.

All species mentioned in this paper are described in "Firewood Crops", a 237-page illustrated book published by the National Academy of Sciences. It can be obtained from the Commission on International Relations, N.A.S. - National Research Council, 2101 Constitution Avenue, Washington, DC 20418, USA.

Species trials should be planted in a randomized block design with at least 4 replications and the results should be analyzed by the analysis of variance procedure. Each plot should consist of 121 trees if square and

128 trees if rectangular. This will provide a 2-row isolation strip and a central measurement plot of 49 trees and 48 trees respectively. The main and secondary species trials should have one spacing for all species: 2.5 x 2.5 meters. Area required will be 6 hectares gross.

The main species trials should be performed on 3 sites, representing to the extent possible, the range of site quality in the "dry" forest lands of the Dominican Republic. Two sites representing the top and medium site quality can be chosen in the ISA tract near Mao, and the most severe site should be chosen in the area of Azua in cooperation with the Oficina para el Desarrollo Integral Agropecuario del Valle de Azua.

b. Secondary comparisons of species within a genus and some independent comparisons should be undertaken to refine this information obtained from the main species trials. The design and analysis should be the same as under (a). The following comparisons are recommended:

- Leucaena leucocephala (K-8) against varieties K-28, K-67, and the Peru type.

- Eucalyptus camaldulensis against E. citriodora, E. tereticornis, E. gomphocephala, E. occidentalis.

- Acacia mangium should be tested against A. auriculiformis, A. Catechu, and Albizia lebbek.

- Prosopis juliflora against P. Chilensis, P. Tamarugo, P. alba, and Cassia siamea.

One spacing, 2.5 x 2.5 meters is to be used. The trials need only be performed on one site near Mao. A gross area of 6 hectares will be required.

c. Spacing trials of the 5 main species should be undertaken using the same design and analysis as described above. Spacings of 1.5 x 1.5, 2.5 x 2.5, 3 x 3, and 4 x 4 meters are recommended for testing. The trials should be performed on 2 sites: The highest (near Mao) and the lowest (near Azua). Area required is 20 hectares gross.

d. Plantations of the main species should be established on large enough areas to perform a series of ancillary tests as well as to provide information and training for an operational planting program. Experience in establishing tree plantations in the Dominican Republic is minimal and must be obtained before large scale conversion requiring dependable, continuous supplies of wood can be considered.

The plantations should enable project personnel to do the following:

- Develop ratios of above-ground biomass volume to green weight.
- Develop ratios of green weight to ovendry weight of above ground biomass.
- Test coppice cycles and rotation lengths.
- Furnish biomass for testing and demonstrating conversion technologies.
- Develop drying schedules.
- Develop harvesting systems.

e. Some research and development work will be needed in the nursery, especially with seed handling, storage, and sowing of eucalyptus and casuarina species. Nursery growing cycles must be determined for optimum seedling size to coincide with planting season.

f. Present practice with large black plastic bags and the digging of large planting holes should be tested against use of smaller containers and less drastic and costly planting procedures. In this aspect of the work much could be learned from "Doubleharvest" and the Baptist Mission in Kenscoff in Haiti. USAID/Port-au-Prince would be the best contact.

g. At the end of the project period of 5 years a start can be made with financial analyses of energy plantations provided accurate records of cost are kept and prices of firewood and charcoal are collected.

h. At the end of the above-described program of testing and development, an intelligent choice can be made of which species to plant on the various sites available, how to grow the seedlings and how to plant them, what spacing to use and when to coppice the stand. There will be enough information available upon which to base the start of a large scale planting program. Testing and demonstration, however, should continue on a modest scale to keep improving and refining the whole process of growing woody biomass for energy.

i. Sequence of events

Year

1
- Establish nursery
  Buy seed of all species
  Grow 40,000 seedlings
  Buy seed handling and testing equipment
- Clear, prepare the site for planting and fence 31 hectares
  Establish main species trial - 6 hectares
  Establish plantations - 25 hectares

2.
- Nursery - Produce 60,000 seedlings
- Clear, prepare the site, and fence 51 hectares
  Establish spacing trial - 20 hectares
  Establish secondary species comparisons - 6 hectares
  Establish plantations 25 hectares.
- Tend previous plantings
- Measure trials and store data in Comision computer
- Begin nursery and planting tests
- Begin developing weight ratios
- Build access roads.

3
- Nursery - Produce 100,000 seedlings
- Clear, prepare the site, and fence 50 hectares
  Establish plantations - 50 hectares
- Tend previous plantings
- Measure trials
- Begin tests of coppice cycles.
- Begin tests of rotation lengths.
- Continue nursery and plantation tests
- Continue weight ratio tests.
- Begin volume/weight tests.
- Build access roads.

4
- Nursery - Produce 200,000 seedlings.
- Clear, prepare the site, and fence 100 hectares
  Establish plantations - 100 hectares.
- Tend previous plantings as needed.
- Measure trials, and begin analysis of main and secondary species trials and spacing tests.
- Continue nursery and planting tests.
- Begin harvest for conversion tests.
- Develop harvesting system.
- Build access roads.

5.
- Nursery - Produce 200,000 seedlings.
- Clear, prepare the site, and fence 100 hectares.
- Tend previous plantings as needed.
- Measure trials and analyze the results.
- Harvest for conversion tests.
- Complete harvesting system.
- Build access roads.
- Prepare detailed reports.

j. Project costs (Biomass Production Only)

		Per Annum	Entire Project
1	Personnel		
	Project Manager (professional forester)	$ 10,000	$ 50,000
	Supervisor (Nursery)	$ 8,000	$ 40,000
	Supervisor (Trials)	$ 8,000	$ 40,000
	Supervisor (Plantations)	$ 8,000	$ 40,000
	Labor 112man/years @	$ 1,500	$168,000
	Total		$338,000
2	Equipment and Supplies		
	Measuring devices		
	4 diameter tapes @ 25		$100
	1 Haga Altimeter & Rangefinder		$240
	2 Height measuring poles @ 180		$360
			$700
	Handtools		
	25 axes @ $17.80		$ 425
	12 bow saws @ $15.00		$ 180
	6 crosscut saws @ $40.00		$ 240
	25 spades @ $15.00		$ 375
	25 pick axes @ $36.00		$ 900
	25 machetes with sheaths @ $22.00		$ 550
			$2,670
	Nursery Supplies		
	Plastic bags		$10,000
	Hoses		$ 500
	20 Watering cans @ $16		$ 320
	Markers, Tapes, etc.		$ 400
	Styrofoam Trays		$ 275
	Rootrainers		$ 350
	10 Special Planting tools @ $42		$ 420
	Total		$11,915
	Barbed Wire		$30,000
	Bulldozer rental		$10,000
	Nursery toolshed		$ 300
	Total		$40,300
	Seed, 24 lbs. (see appendix)		$ 785
	Seed Handling Equipment		
	1 Dybvig Seed Cleaner with variable speed motor From Malcolm Dybvig 4007 Elmwood Avenue Tillamook, OR 97141		$ 890

1 Oliver Model 30 Gravity Seperator w/motor Oliver Mfg. Co. P.O. Box 512 Rocky Ford, CO 81067	$ 3,150
2 Upright 110-12 cuft capacity refrigerators	$ 1,400
1 Stulz Sr. Duplex Model 48 Cabinet Germinator	$ 9,300
Purity Analysis equipment	$ 108
1 Sample Divider	$ 205
1 Low Power Microscope	$ 565
	$10,178
Grand Total	$65,863

3. Technical Assistance	Man/Months	Cost
Full time general forester with 3-4 years' experience in plantation management and some knowledge of container nursery operations. Fluent Spanish	30	$250,000
Intermittent assistance from an experienced researcher in plantation management	3	$ 30,000
Intermittent assistance from an experienced nursery and seed specialist	2	$ 20,000
Intermittent assistance from a specialist in mensuration and biometrics	3	$ 30,000

k. Host country participant training plan

	Man/Months	Cost
Practical		
Visit by a forester and a forestry technician to Haiti to observe "Doubleharvest" and Baptist Mission nursery practices and planting methods (contact US/AID Port-au-Prince	1	$ 1,500
Visit by a forester and a forestry technician to Brazil to observe production of eucalyptus wood for conversion to charcoal.	1	$ 5,000
Visit to U.S. to observe container-nurseries in operation, planting of container seedlings. Also to observe methodology of field plot research in tree planting. (Contact U.S. Forest Service)	1	$ 8,000
Academic		
One year of graduate study with emphasis on plantation management for 4 Dominican Republic nationals with an undergraduate degree in Forestry.		Financed under general training category

Suggested institutions:
- University of Texas
- University of North Carolina
- University of Georgia

1. Selected references

1. Boland, D. J., M.I.H. Brooker and J. W. Turnbull.
1980. Eucalyptus Seed. Commonwealth Scientific and Industrial Research Organization, Australia, 191 p.

2. Comision Nacional de Politica Energetica.
1980. Energy strategies for the Dominican Republic. 111 p.

3. FAO
1968. A guide to tree species trials in tropical America (Draft). Forest and Forest Industries Division, FAO, Rome, 82 p.

4. FAO.
1974. Tree planting practices in African savannas. Forestry Development Paper 19, FAO, Rome, 185 p.

5. Harcharik, David A.
1980. Forest plantation practice in the Dominican Republic--Status and potential. Report on file at Division of Timber Management Research, Forest Service, U.S. Department of Agriculture. 34 p.

6. Jennings, Penelope and Benito A. Ferreiras
1979. Recursos Energeticos de Bosques secos en la Republica Dominicana. Instituto Superior de Agricultura Santiago, Republica Dominicana, 117 p.

7. National Academy of Sciences
1980. Firewood Crops, 237 p.

8. do-Leucaena, 115 p. 1977

9. Rodriguez, Doroteo A.
1979. Evaluation of energy plantations and their use in electric production for Dominican Republic. MS Thesis, New Mexico State University, Las Cruces, NM, 87p.

10. Smith, Ronald.
1980. The potential for charocal plantations in Haiti. Report to USAID/Port-au-Prince, Haiti, 42 p.

11. Trehan, Ranvir, Lawrence Newman, and Wayne Park.
1980. Potential for energy farms in the Dominican Republic. The Mitre Corporation, Metrek Division, 1820 Dolly Madison Blvd., McLean, VA 22102, 61 p.

12. Weaver, Peter.
1979. Agri-silviculture in tropical America. Unasylva. 31 (126): 2-12.

13. Weber, Fred R.
1977. Reforestation in arid lands, Vita Publications, 3706 Rhode Island Avenue, Mt. Rainier, MD 20822, 248 p.

B. THERMOCHEMICAL CONVERSION OF WOOD

The various themochemical conversion processes of wood are shown in table 1. Thermal efficiencies of various biomass conversion processes are shown in table 2.

USAID's PID document has identified four (4) different wood conversion technologies for possible adoption in their 5 year demonstration program. The selected technologies are:

1. Small scale wood to charcoal production.

2. Large scale wood to charcoal production.

3. Wood to electricity production via either direct combustion, pyrolysis or gasification of wood.

4. Conversion of wood to alcohol.

Generally, the criteria on which the options for alternate energy technology is selected in LDCs, are that the:

- Availability of raw materials for the conversion process (wood in this case) is adequate.
- Process requires low capital investment.

- Product is in great demand and can be produced as low cost commodity for use in both rural and urban communities.
- Appropriately trained professionals to run the conversion process are available.
- Equipment system could be built with indigenous labor and materials.
- Conversion technology has been proven elsewhere.
- Process is labor intensive.

Of the 4 above-mentioned wood conversion technologies, pyrolytic conversion of wood to produce charcoal is ranked as having the highest potential for near-term application.

The second choice, for long term potential, is generation of electricity by appropriate wood conversion technology.

The production of alcohol from wood as an energy source should not be considered at this time. Detailed discussions on each of these options are noted in the following pages.

The farmers of the Dominican Republic have been making charcoal by "pit-kiln" methods for ages. The yields from such "pit-kilns" seldom exceed 12 to 14 percent by weight. The reasons that the farmers can sustain such a low yield charcoal making process are:

- The wood used in the charcoal making process is procured without any cost.

- The farmers have no other means of living and whatever money that could be made from the sale of charcoal allows them to survive in the community.
- The farmers have a ready market for the charcoal.

Introducing higher yield charcoal-making processes that farmers can easily adopt and that will provide work for a large number of unemployed citizens, will have substantial socio-economic benefits.

Direct combustion of wood to produce steam and the use of steam to generate electrical energy is a proven technology. The pulp and paper and forest product industries, have been using wood wastes and residues for a long time to generate process steam.

Utilization of wood for the utility level of electrical power generation has, however, been severely limited, primarily by the lack of an adequate, dependable supply of wood as fuel. Wood and bark fired boilers in the small sizes are more expensive than boilers burning liquid and gas.

When wood is combusted to produce high pressure superheated steam which then is expanded in a condensing steam turbine to a very low pressure, the net thermal efficiency of conversion is on the order of 20%. This low thermal efficiency is due to the fact that a major portion (approx. 74%) of the input heat energy from wood is lost in such a conversion process to the cooling water and stack gases. For this reason, a 50MW wood to electrical energy conversion process would require at least 1850 wet short tons of wood per day (2). This large supply of wood has to come from an area of 40

to 100 miles of radius. Calculating, on the basis of 4 dry tons of wood per acre per year (8 wet tons of wet wood/acre/year), a 50 MW wood fired electrical generating plant would require the production commitment of some 75,000 acres of forest. Calculating on the basis of 10 lbs of high pressure superheated steam per kw of electricity, a 50 MW power plant would require a production of 500,000 lbs of steam/hour. Installed cost of a boiler that can deliver this amount of steam, is estimated to be approximately $25 million, which puts this technology beyond the scope of the project under consideration.

The other wood to electricity conversion technology that has been identified in the PID is gasification. Gasification of cellulosic municipal solid wastes has been demonstrated in the public sector. Low and medium-Btu gases have been produced from such gasification processes. Due to the fact that solid wastes are a heterogenous material containing a wide variety of metals, glass and combustibles, many of the technical problems associated with the gasifier operation have been attributed to its complex feedstocks. Wood is predominantly a cellulosic material, and wood gasification has been practiced in large scale gasifiers in Europe and Asia and much of the technical uncertainties have been removed. Economic justification has to be made on case by case basis.

Demonstration of wood gasification processes to generate 100 to 150 kw of electrical power is, therefore, within the scope of the proposed project.

The conversion of wood to alcohol (ethanol and methanol) is technologically proven. Methanol production involves oxygen gasification of wood to produce synthesis gas. This syngas is then purified by purging CO_2, SO_2 and H_2O vapors. The purified syngas is then catalytically synthesized to methanol by using either the ICI or Lurgi methanol synthesis process.

Methanol has been produced from natural gas and more recently from coal, but commercial scale methanol production facilities using wood as a feedstock are not known to exist. Technical and economic uncertainties associated with the wood to methanol production have yet to be overcome.

Production of ethanol by fermentation is based on the conversion of sugars to ethanol by yeast under anaerobic conditions. Production of large volumes of ethanol from carbohydrate substrates has historically been based almost exclusively on the fermentation of C_6 or C_{12} sugars. Lignocellulosic substrates such as wood have not been widely used for ethanol production in the USA, even though U.S. - developed processes for wood hydrolysis have been available for many years. The high cost of the process may have discouraged alcohol production from wood[2].

a. Background of Charcoal-Making

In order to implement a "charcoal-making" development program, it is necessary that the engineers and the technicians working in the development program understand fully the following fundamentals of pyrolysis or carbonization process (3, 4, 5).

- Raw materials to produce charcoal can be almost any carbonaceous material, of either vegetable, mineral or even animal origin. But medium to dense harwoods such as maple, birch, hickory, oaks and beech are the principal commercial raw materials in the U.S.A. Resinous softwoods can be partially carbonized to produce charcoal as well as turpentine, pine oil, and resin oil. The ratio of hardwoods to softwoods for charcoal production is 4:1 in the U.S.A.

- Forestry residues such as bark, sawdust, slabs, clippings and agricultural wastes, like fruit pits, coconut shells, husks, corn cobs, wheat straw, bagasse, cotton gin, and rice hulls can also be carbonized to produce charcoal.

- Charcoal is the carbonaceous residue produced following wood pyrolysis. The composition of charcoal depends upon the carbonization temperature. The volatile fraction in the charcoal goes down as the carbonization temperature is increased. Decrease of volatile matter mans a decrease in smoke producing elements of charcoal and consequently a lower charcoal yield. Table 3 shows the yield of charcoal with increasing temperature. Domestic cooking charocal is produced in high temperature

carbonization processes and, therefore, contains very little volatile matter. Industrial charcoal should contain high percentages of volatile matter and is produced from low temperature carbonization process (approx. 400°C).

- The composition of oven dry wood (OD) varies little with the species and on the average contains 50 to 55 percent carbon, 6 to 7 percent hydrogen and 40 to 45 percent oxygen, on an ash-free, moisture-free basis. Its calorific value ranges from 4,200 to 4,700 kcal/kg (15 to 17 million Btu/ton) [3, 4].

- Wood from freshly felled trees contains 50 to 60% moisture (green weight basis). Sun/air dried wood has 20 to 30% moisture.

- One ton of wood with 30% moisture consumes, for drying and carbonization, 550,000 to 600,000 kcal. In an actual charcoal making operation 15 to 20% of tne wood, depending on its moisture content, will be consumed as a heat source for the carbonization process (4).

- The carbonization of wood produces a wide variety of products:

Wood + Heat = Charcoal + water vapor + carbon dioxide + carbon monoxide + acetic acid + methanol + wood tar.

- Carbonization of hardwoods in the laboratory will produce approximately 31% charcoal, 25% non condensible gases, 39% pyroligneous liquor, and 5% insoluble tars. The insoluble tars can be grouped under,

(a) light oils with boiling points less than 200°C (aldehydes, ketones, acids, and esters); (b) heavy oils with boiling points above 200°C containing phenolic compounds, and (c) pitch [3].

- Composition range for the non-condensible gases produced in the charcoal making process is as follows:

Carbon dioxide	- 50 to 60 volume percent.
Carbon monoxide	- 22 to 23 volume percent.
Hydrogen	- 1 to 4 volume percent.
Methane	- 3 to 8 volume percent.
Other Higher Hydrocarbons	- 1 to 6 volume percent.

- Charcoal making gas containing carbon monoxide is lethal if inhaled. Precautions are therefore needed to handle and to exhaust the gas from the charcoaling process.

- The presence of methane, hydrogen and carbon monoxide in the charcoal-making gas makes it a good fuel.

- The off-gas from the charcoal making process can be distilled to recover many valuable chemicals as noted in Table 4. In many LDCs, these chemicals are now being imported. For large scale charcoal making industries, the recovery of these chemicals from the otherwise wasted off-gas, is highly desirable. Indotec Laboratory is competent to work on such distillation and recovery processes.

- The rate of moisture loss from the stacked wood piles is proportional to time, but slows down considerable after 3 months. It is strongly recommended that trees should be felled at least 4 weeks before they are loaded in the kiln. It has been documented that green wood lengthens the carbonization time and gives a lower yield of poorer quality charcoal than that produced from dry wood.

- The general properties of the wood charcoal are noted in Table 5.

- There are two basic techniques in charcoal production:

1. Batchwise, as in the beehive kiln (figure 1), Mark IV metal kiln (figure 2), and Missouri kiln (figure 3).

2. Continuous as in the Nichols-Herrshoff multiple hearth furnace (figure 4).

- Batchwise processing is more labor intensive and less capital intensive than continuous charcoal making processes. The product quality control for the batchwise process depends, generally, on the training and experience of the charcoalers. The kiln is moderately priced and in most cases such kilns can be built at the site with local labor and materials. Very little preprocessing of feedstocks is required for such kiln operations.

- Continuous charcoal making involves the use of high technology and very high capital intensive equipment. This will require

not only importation of the equipment and spare parts, but also trained operators.

- The feed for such a kiln needs to be extensively preprocessed (hogged and dried). The final product of such a kiln has to be briquetted before they are used in domestic cooking, as the continuous process does not produce "chunky" charcoal.

- The production rate of the continous charcoal making machine is about 2.5 metric tons per hour. In comparison, a 180 cubic meter batch kiln may produce 16 metric tons of charcoal in a 3 week cycle.

- Nichols-Herreschoff type equipment is not recommended for the near term charcoal making goal.

b. Charcoal Kiln Test and Demonstration Program

OBJECTIVES:

1. To demonstrate several appropriate technology commercial kiln designs for small and large scale production of charcoal, utilizing local woody biomass.

2. To develop reproducible operational procedures, for small and large scale production of charcoal.

3. To determine the economics of kiln operation with several wood species and kiln designs.

4. To recommend the "best design" of kiln, preferred wood species and the most efficient charcoal production method to the national government.

The qualifications for the best design are:

1. Low cost.
2. Simple technology.
3. Could be built with indigenous labor and materials.
4. Maximum possible yield in a short coaling period.

c. Selection of Kilns

The following designs of kiln have achieved widespread acceptance in the charcoal making industries around the world:

- Beehive brick kiln - Brazilian design.
- Mark IV - Metal kiln - Uganda design.
- Missouri Kiln - USA design

A short description of each of the above designs follows:

Beehive Kiln. (Figure 1)

- It is a batch type kiln and internally heated.
- It is circular in shape, has a domed roof and is built of ordinary firebrick.
- It has excellent yield (approximately 62% by volume and 25% by weight).
- It is a low cost unit. (A $45m^3$ unit costs approx. $3000).
- It is simple to build. Two men can build such a kiln in 8 to 10 days. (Total labor approximately 120 to 150 dollars).
- It has a long life span (up to 6 years).
- It can be dismantled at one place and rebuilt at another location without much loss of bricks.
- It provides uniform carbonization, has uniform cooling and a short operating cycle (approximately one week).

Mark IV - Portable Metal Kiln (Figure 2).

- Such kilns are working in Uganda.
- The all-steel kiln consists of two interlocking cylindrical sections, surmounted by a conical cover and a central cap. The entire kiln rests on

appropriately sized channels arranged radially and are provided with closeable vents and collars to enable air to enter or gas to escape, as desired by the operator. The collars also act as attachments for vertical smoke stacks.

- The kiln is portable. It can be easily dismantled in one location and reassembled elsewhere. This feature becomes attractive when the forest resources are being depleted in one location, the kiln could then be carried to the next forest area. This will eliminate long haul cost of wood to the kiln site.

- Such kilns give good yields. Approximately 25% by weight or 60 to 65% by volume of stacked wood could be produced as charcoal.

- Such units cost relatively little (US $4500.00) and can easily be fabricated in local metal fabricating shops.

Missouri Kiln (Figure 3)

Commercial scale production of charcoal has been conducted in the U.S.A. by "Missouri-type" kilns. This kiln is typically constructed of reinforced concrete and has a capacity of 160 to 180 m^3 of wood per cycle. A typical charring cycle may consist of:

1 to 2 days for loading wood in the kiln.

5 to 8 days for the carbonization process.

10 to 14 days for cooling of the charcoal.

1 to 2 days for removing the charcoal from the kiln.

Satisfactory carbonization depends primarily on maintenance of proper burning conditions in the pyrolysis zone. Temperature control is attained by varying the size of the air port openings.

Burn progress can be determined by the color of smoke or by determining the temperature along the vertical distance of the steel doors. Yields of such kilns are approximately 25 to 28% by weight. Charring time will vary with the wood type, its moisture content and with the skill of the operator.

"Missouri-type" kilns are a proven design and therefore have very few technical or economic uncertainties. Adoption of a large scale of production is possible only when low cost feedstocks are conveniently available.

d. The Test and Demonstration Program

Program Team: See Table 6.

The duration of the demonstration program is five (5) years. The activities of the first three (3) years (phases 1 to 3) will be spent in developing operating parameters with wood of a number of tree species.

The kiln tests would begin as soon as the project team is selected and trained, the kilns have been built and appropriate instrumentation has been completed. The wood available when the planting sites are cleared of existing dry forest, could be used for charcoaling. Wood from the fast growing species under the reforestation program would be used in the last two years of the program.

Feedstock is to be made available at the roadside of the test facility. Felled trees to be cut to kiln size feedstock, split and air/sun dried when necessary.

The program will include the following activities:

- Selection of the program team.
- Training of key personnel in kiln design, construction and charcoal mixing processes.

- Building and refurbishing the kilns as:

  (a) Beehive brick kiln - design and construct onsite.

  (b) Mark IV - metal kiln - refurbish on-site.

  (c) Missouri kiln - design and construct on-site.

- Procure the necessary instrumentation and equipment systems.
- Procure and process the charring wood.
- Train technicians on the charcoaling process.
- Start-up and debug test kilns and instruments.
- Conduct preliminary test runs and gather test data.
- Enter test data in a computer data bank and perform an analysis of the data (monthly basis)
- Continue testing with major test variables of wood species, kiln designs, and types of test samples (green vs. dry, whole vs. split, smaller diameters vs. larger diameters, etc.).
- Analyze data.
- Train village farmers in charcoaling techniques.
- Perform product quality control tests.
- Continue the demonstration program activities.
- Prepare an operational manual for each kiln design.
- Incorporate the demonstration data for national government adoption in the charcoal-making scheme.

e. Test & Demonstration Facility:

The test and demonstration facilities are composed of physical structures (buildings), man-power resources (engineers and technicians), test instrumentation and demonstration equipment. A short description of each of the facility's components is given below:

1. Physical structure:

The physical structure should be a covered building with doors and natural ventilation. The building should have electricity and water. Adjacent to the building an enclosure with a locked door should be constructed as a workshop and for storage. The workshop should have a workbench, power and jig saws, other hand tools like a cross-cut saw, shovels, hand carts, fire extinguishers, and personal protective gear like goggles, gloves, etc. The storeroom will provide space to store kiln construction materais like firebricks, cement, sand and spare hand tools. Racks should be provided on the walls, to store marked sample jars of the charcoal produced during the demonstration program.

The kilns should be located in well tramped ground and good walkways should be provided to cart in and out supplies and products from the test site. A picnic table should be provided for the workers' lunch how.

2. Test Instrumentation

The main test equipment system shall consist of:

- One platform scale. (0 - 200 kg).
- Temperature sensing thermocouples.
- Multipoint temperature recorders.
- Moisture tester oven with fan.
- Laboratory scale.
- Sample weight pans and containers.

- Clock and timer.
- Weatherproof 3-pronged electrical outlets.
- Heavy duty grounded electrical extension cords.
- Drying racks (under covered shed).

3. Test Run Data To Be Collected

- Statistical weights of wet and dry feedstocks.
- Total individual charge weights.
- Moisture content of the change material (average statistical).
- Case history of drying feedstocks.
- Kiln temperature vs. time data.
- Product yield weight.
- Species of wood used in the feedstock.
- Mechanical condition of the feedstock (i.e. whole vs. split ec.).
- Average carbonization temperature.
- Duration of process stages (i.e. oxidation, carbonization, cooling, etc.)
- Proximate analysis of the wood used as feedstock and analysis of the product charcoal.
- Gas combustion analysis.

4. Briquetting

During charcoaling operations, a certain percentage of the product will become fines. If the charcoaling operation is performed with agricultural wastes and residues, the charcoal will not be in the "chunky" state. In both cases the charcoal should be prepared for household use by briquetting.

Briquetting operations use an adhesive bonding compound like clay, starch, and similar materials to transform loose and fine charcoal into manageable briquette form.

Briquetted charcoal is uniform in size, is sturdy, is easy to store and transport and is very convenient to use in domestic and backyard cooking.

Briquetting operations, as shown in Figure 5, involve use of highly specialized equipment systems and require training. How much of such a briquetting operation can be achieved without extensive mechanization and automation, will depend on many factors.

In the later part of the development program, the briquetting operation may be studied. At present, it is beyond the scope of the demonstraton program.

The Energy Commission of the Dominican Republic, has shown great interest in utilizing coconut shells and husks in charcoaling, and wish to study briquetting operations.

5. Manpower Requirements (Demonstration Program)

- Program Adviser - USAID
- Technical Supervisor - USAID
- Program Manager - (1) - ISA/RD
- Project Engineers - (2) - ISA/RD
- Technicians - (5) ISA/RD
- Chemists - (1) - ISA/RD

The project manager should be an experienced engineer in civil or mechanical engineering with good understanding of testing and research in construction, construction technology, and laboratory data gathering experience.

Technicians should be high school graduates with background in science and mathematics, good mechanical apptitude and willing to work with tools and equipment.

The chemist should have an analytical chemistry background, and be experienced in the use of analytical balances, ovens, and sample preparation.

f. Project Costs (Conversion Only)

		COSTS (1000 US $)
1. Site Preparation		
- Levelling of ground & clearing of trees		4
- Paving of access roads		2
- Concrete slabs at test sites		2
- Electrical hook-up		2
- Water Main/Well Digging		13
- Fencing		2
- Building modification and renovation		20
	Total	45
2. Kilns		
- One Beehive Brick Kiln		4
- One Mark IV Metal Kiln Refurbishing		3
- One Missouri Kiln		20
	Total	27
3. Instrumentation		
- Platform scale (1 to 20 Kg)		1
- Moisture Tester		1
- Multipoint Temerature Recorders (2)		6
- Assorted Thermocouples		2
	Total	10
4. Tools and Equipment		
- Table Saws		0.2
- Drills		0.5
- Cross cut saws		0.3
- Other Hand Tools		0.5
	Total	1.5
5. Facility Equipment		
- Drying racks (wood)		2
- Short Haul truck (Dump)		20
	Total	22
6. Laboratory Analysis (Indotec)		10
Equipment for Gas-chromatography		10
	Total	20
7. Wood Gasification for Electrical Power Generation		
- Site preparation		15
- Fuel Preparation & Storage		20
- Building and Foundation		15
- Gasifier, Feed System, and Engine - Generator Set		180
- Elec. Switch Gear		5
- Truck		20
- Technical Assistance		100
	Total	355
	Grand Total	460.5

g. Technical Assistance

	Man/Months	Cost
Program advisor with an undergraduate degree in civil or mechanical engineering. Experienced in demonstration program activities program development, interpretation of charcoal making data, and liaison with USAID program manager.	5 (intermittent over 5 yrs.)	$60,000
Technical supervisor with an undergraduate degree in civil/mechanical engineering. Experience in R&D projects, charcoal making, ovens, furnace and project management training.	24 (full time)	$200,000

h. Host Country Participation Training Plan

(In the U.S.A.) contact: Mr. Shelby Jones, Missouri Department of Conservation, P.O. Box 180, Jefferson City, Missouri 65102. Phone: (314) 751-4115.

1. Plant Visits

	Cost
Duration (total) - 1 month	
Team Participants - 4 men	$25,000
Total Commitment - 4 man-months	

Visit commercial charcoal making plants in U.S.A. Each plant visit shall include: observing charcoal production, kiln construction and maintenance

work, materials and supply inventory, program management, product storage and distribution system

2. On-the-Job Training

U.S.A.

	Cost
Duration - 3 Months	$44,000
Team Participants - 4 men	
Total Commitment - 12 man-months	

Work as an apprentice in a charcoal making plant (Missouri-type Kiln). Training will include:

- The sizing of wood for charcoaling.
- Drying and processing if any.
- Stacking and charging in the kiln.
- Firing and controlling drafts.
- Unloading the charcoal from the kiln.
- Maintenance of the kiln.
- Quality control.
- Storage and distribution of the charcoal.

Brazil

	Cost
Duration - 3 months	44,000
Team Participants - 4 men	
Total Commitment - 12 man-months	

- Work as apprentice in Beehive type charcoal plant.

- Learn feed preparation techniques.
- Learn kiln designs.
- Learn kiln maintenance.
- Learn kiln charging and removal of charcoal.
- Learn storage and distribution of products.

3. Seminar in Dominican Republic

Duration - 1 week (5 days) $ 15,000

Speakers:

1. Forest Management, seeding and planting
2. R&D Management.
3. Charcoal making fundamentals.
4. Data gathering and data compilation and data interpolation.
5. Reporting.

Each speaker will have one, day long, seminar-class. Hand-outs of lecture notes will be available for attendees.

Participants:

- U.S. AID Program Manager.
- R.D. Energy Commission Members.
- Project Supervisor.
- Project Engineers.
- Forest Management Personnel

(Spanish speaking speakers preferable but not mandatory.)

CITED REFERENCES

1. A. K. Chatterjee, "State-of-the-art review on pyrolysis of wood and agricultural biomass", prepared for USDA, under contract no. 53-319R-0-206 March 1981.

2. E. M. Kinderman, A. K. Chatterjee, et al, "Technical and economic evaluation of biomass utilization processes", draft technical report No. 1; prepared for US DOE under contract No. DE-AC03-76-ET-2060E, SRI International, September 1980.

3. C. M. Moscowitz, "Source assessment, charcoal manufacturing, state-of-the-art"; prepared for US EPA, Office of Research and Development, under contract No. 68-0201874; EPA Publication No. 600/2-78-004Z, December 1978.

4. H. Meyers, UNIDO Consultant, "Charcoal Iron making, a technical and economic review of Brazilian experience"; U.N. Industrial Development organization, UNIDO/IOD.228, November 1978.

5. D. E. Earl, "A report on charcoal", Food and Agricultural Organization of the United Natons, Rome 1974.

BIOMASS THERMOCHEMICAL CONVERSION PROCESSES (1)

TABLE- 1

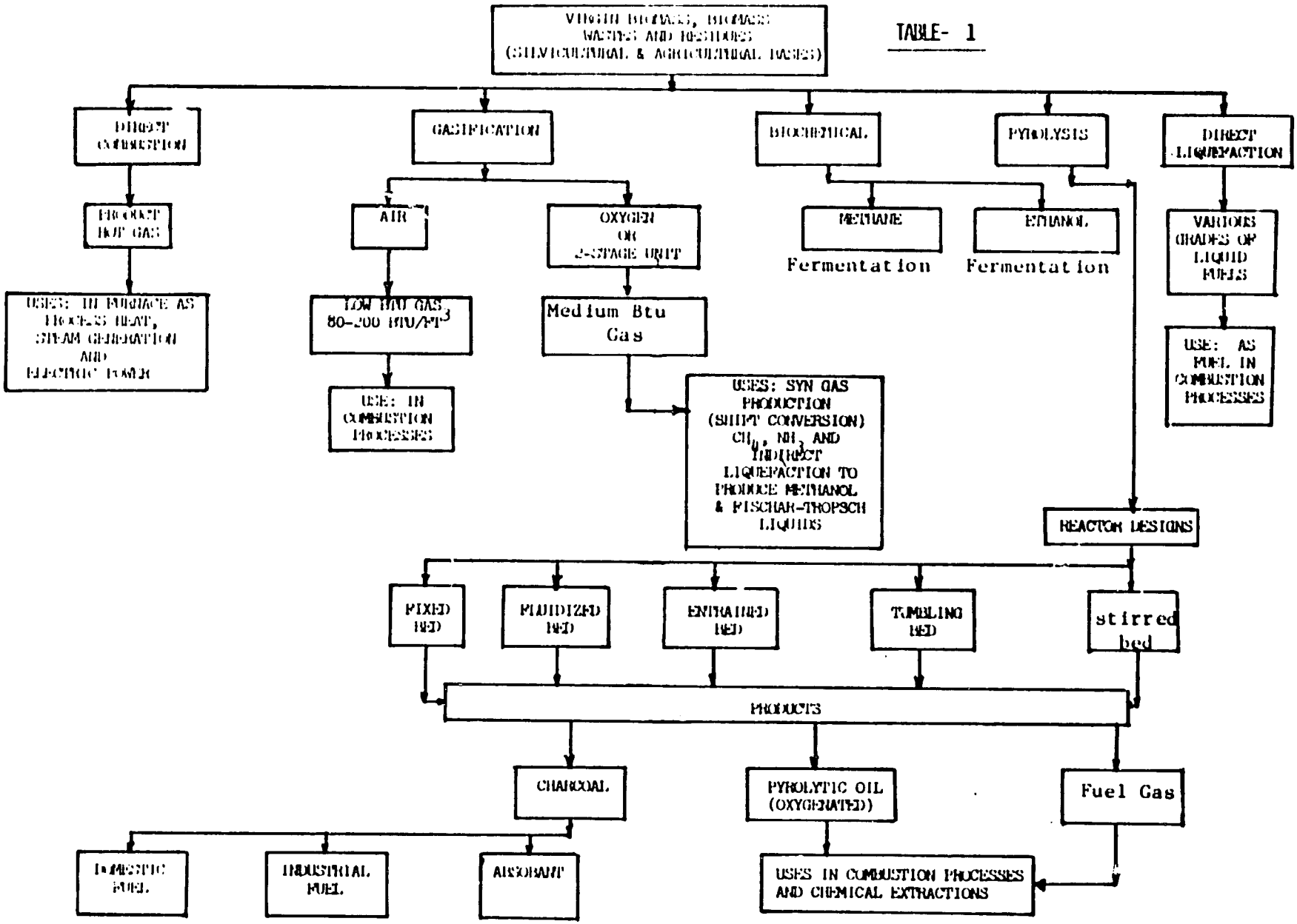

TABLE - 2

Ranking of Biomass Conversion Processes By Effeciency Of Production Of Primary Product(2).

PROCESS	EFFICIENCY (PERCENT)
COMBUSTION: STEAM PRODUCTION	70
COMBUSTION: ELECTRICAL POWER GENERATION	20
COMBUSTION, COGENERATION:(STEAM & POWER)	68
GASIFICATION: LOW BTU GAS (RAW)	81
GASIFICATION: MEDIUM BTU GAS	76
GASIFICATION: CLEAN,LOW BTU GAS	69
GASIFICATION: SYNTHESIS GAS,MEDIUM BTU GAS	61
GASIFICATION, METHANOL	57
GASIFICATION PLUS CONVERSION(GASOLINE)	45
PYROLYSIS	29
LIQUEFACTION(LAWRENCE BERKELEY LAB PROCESS)	47
FERMENTATION, (WOOD)	35
FERMENTATION ,SUGAR CROPS	32+
FERMENTATION AGRICULTURAL RESIDUE	31

* Efficiency=(Heating value of product)/(Heating value of feedstock)

+ By-Products with fuel value are also produced but are not included in this efficiency calculation.

Table - 3

AMOUNT AND COMPOSITION OF CHARCOAL PRODUCED AT DIFFERENT MAXIMUM TEMPERATURES

Distillation temperature, °C	Composition of charcoal, %			Yield of charcoal on the dry weight of wood, %
	Carbon	Hydrogen	Oxygen	
200	52.3	6.3	41.4	91.8
250	70.6	5.2	24.2	65.2
300	73.2	4.9	21.9	51.4
400	77.7	4.5	18.1	40.6
500	89.2	3.1	6.7	31.0
600	92.2	2.6	5.2	29.1
700	92.8	2.4	4.8	27.8
800	95.7	1.0	3.3	26.7
900	96.1	0.7	3.2	26.6
1,000	96.6	0.5	2.9	26.8
1,100	96.4	0.4	3.2	26.1

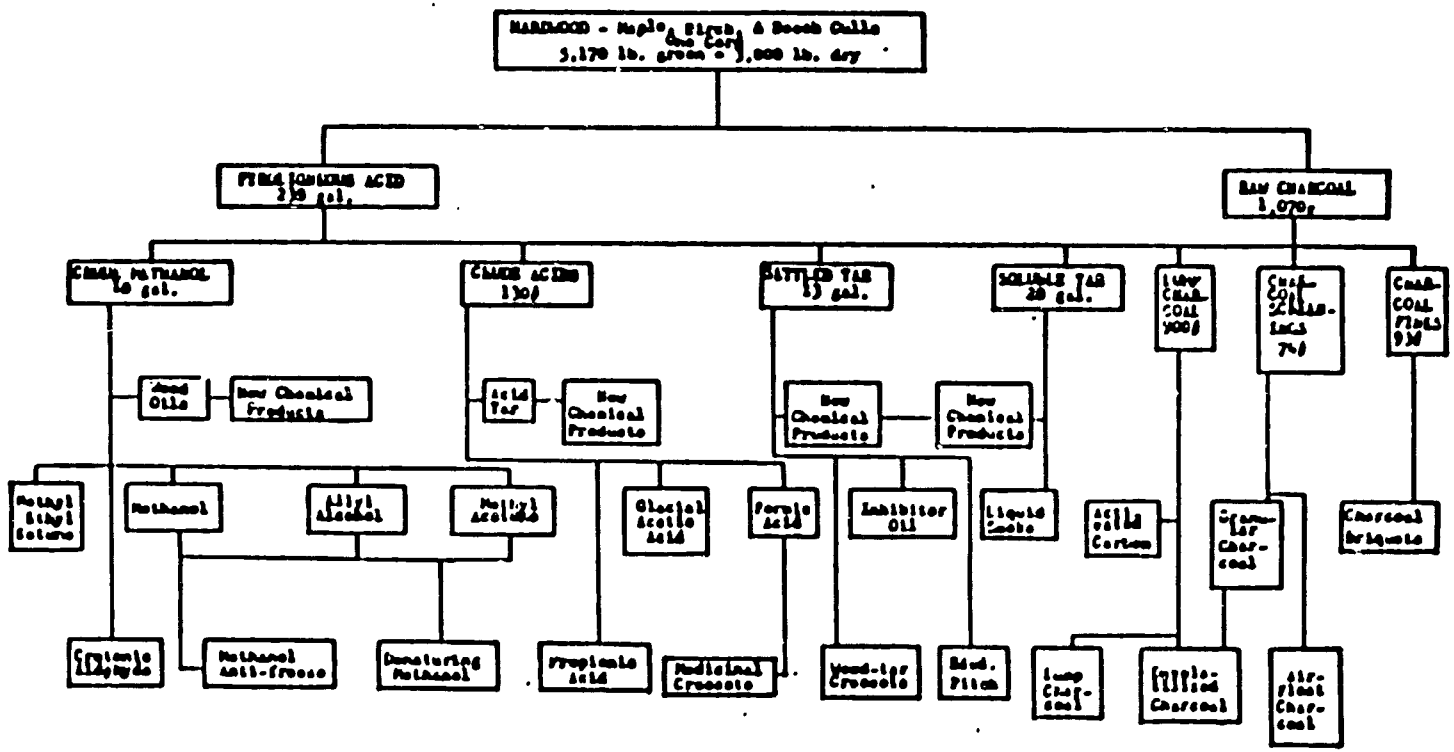

TABLE -4

Hardwood Distillation Products

SOURCE: REFERENCE -1

TABLE - 5

GENERAL PROPERTIES OF CHARCOAL[1,5]

YIELD BY WEIGHT	25 to 40 percent of dry weight of wood
YIELD BY VOLUME	50 to 65 percent of the volume of wood
SPECIFIC GRAVITY	Varies With Carconization Temperature
AVERAGE BULK DENSITY	250 Kg/ Cubic Meter
SPECIFIC SURFACE AREA (lumped charcoal)	1 TO 2 m^2/ g
STABILITY	Inert When Conditioned 24 hours
HARDNESS	Varies With The Density Of The Wood used and Inversely with the Increase in Carbonization Temperature
MOISTURE CONTENT	1 to 5 percent
VOLATILE MATTER CONTENT	7 to 30 %. Varies Inversely With Carbonization Temperature. The Lower The Volatile Matter,The less Smoke in Cooking Stoves.
FIXED CARBON CONTENT	80 to 90 percent. Varies With Carbonization.
CALORIFIC VALUES	5,600 to 7222 Kcal / Kg
SULFUR CONTENT	0.03 to 0.035 percent by weight
ASH	0.5 to 1.5 percent by Weight

TABLE - 6

CHARCOAL MAKING DEMONSTRATION PROGRAM

PROJECT ORGANIZATION

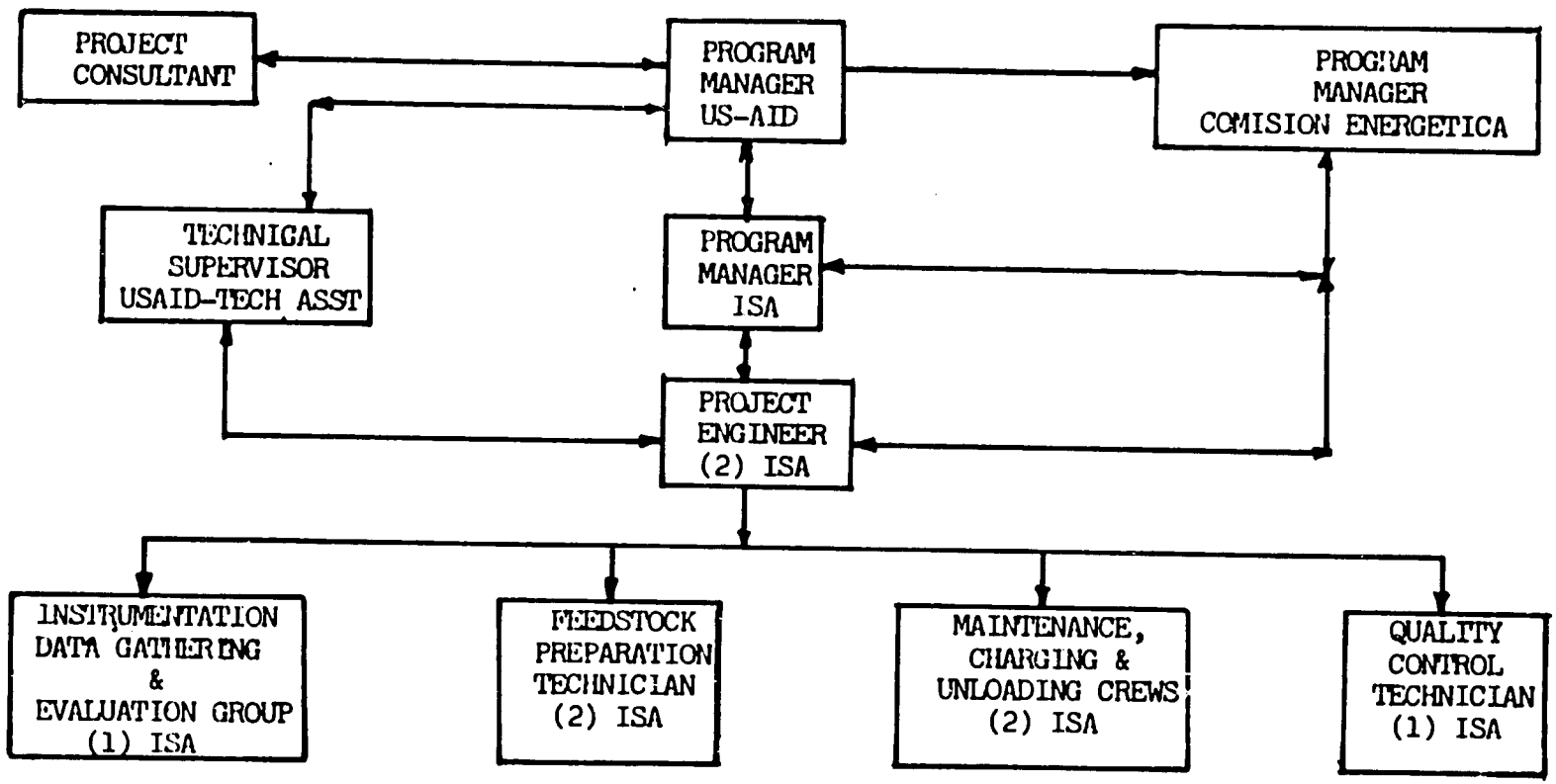

: urce: Reference -1

FIGURE- 1

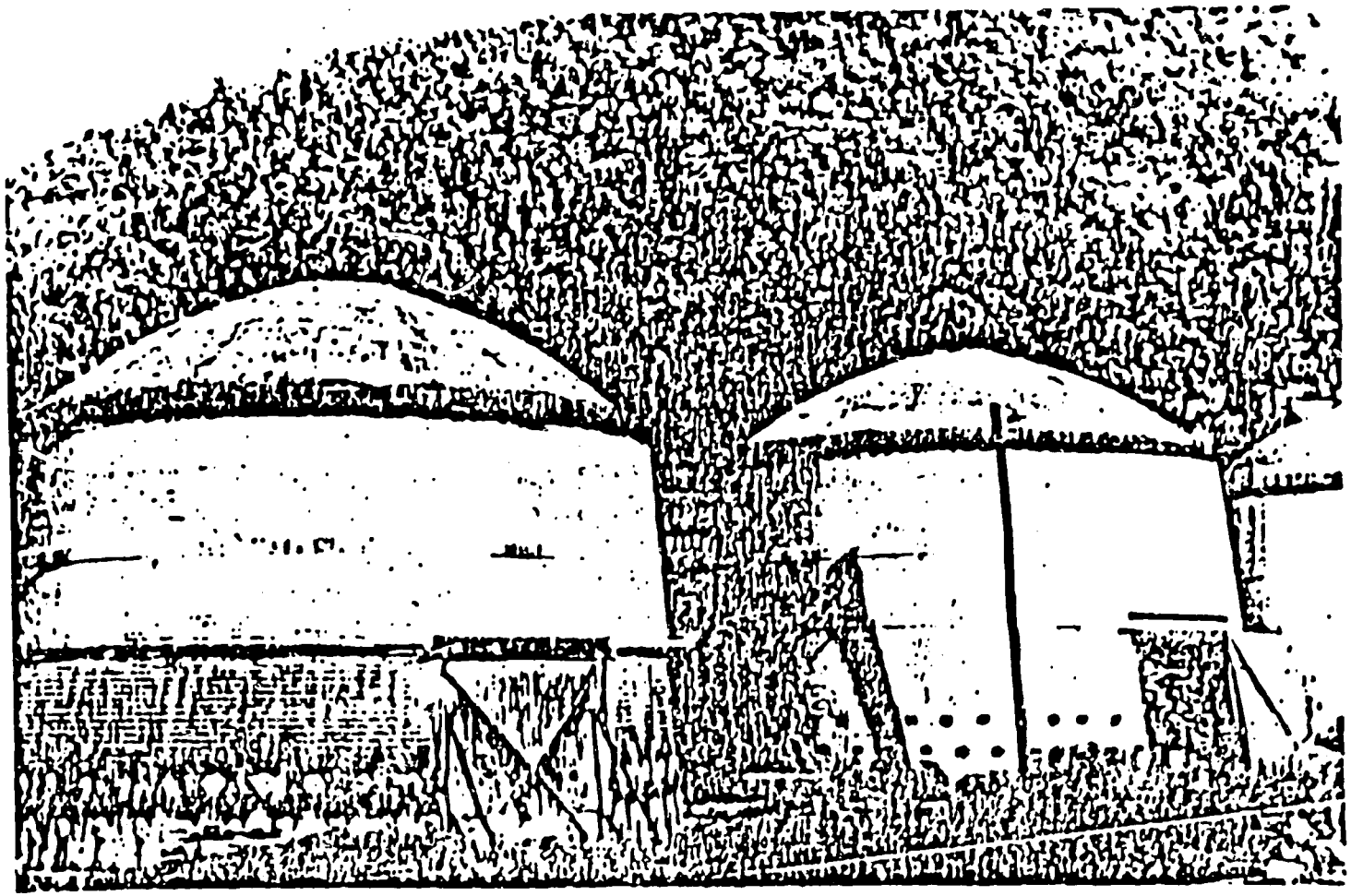

--Brick beehive kilns--large-scale conversion of low-grade wood.

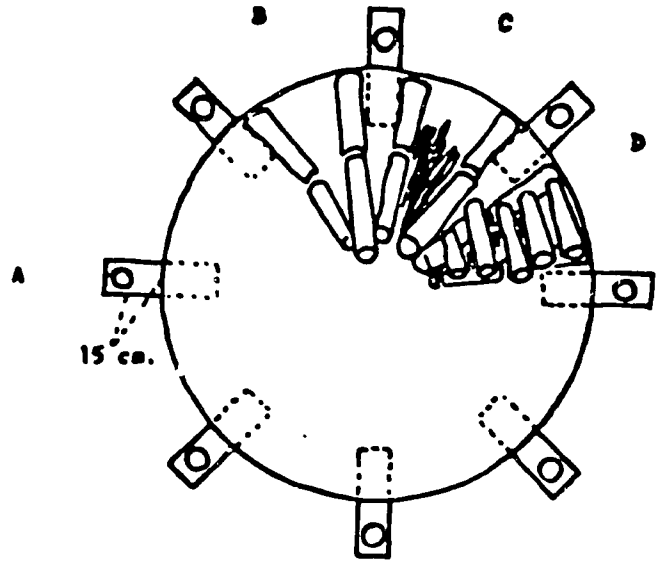

Diagrammatic representation
of the various stages of loading.

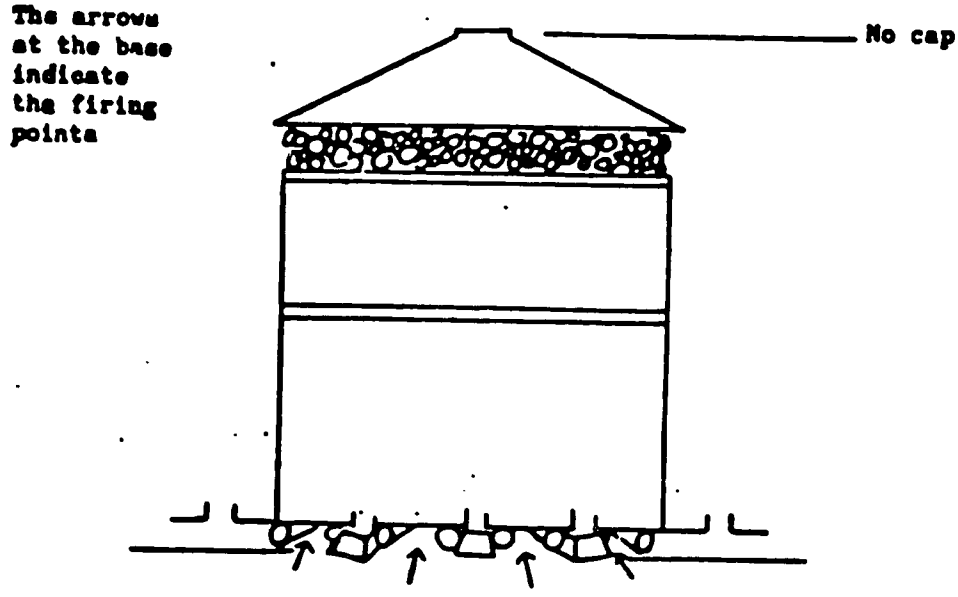

Diagrammatic sketch of kiln at time of lighting

FIGURE -2

SOURCE: REFERENCE- 5

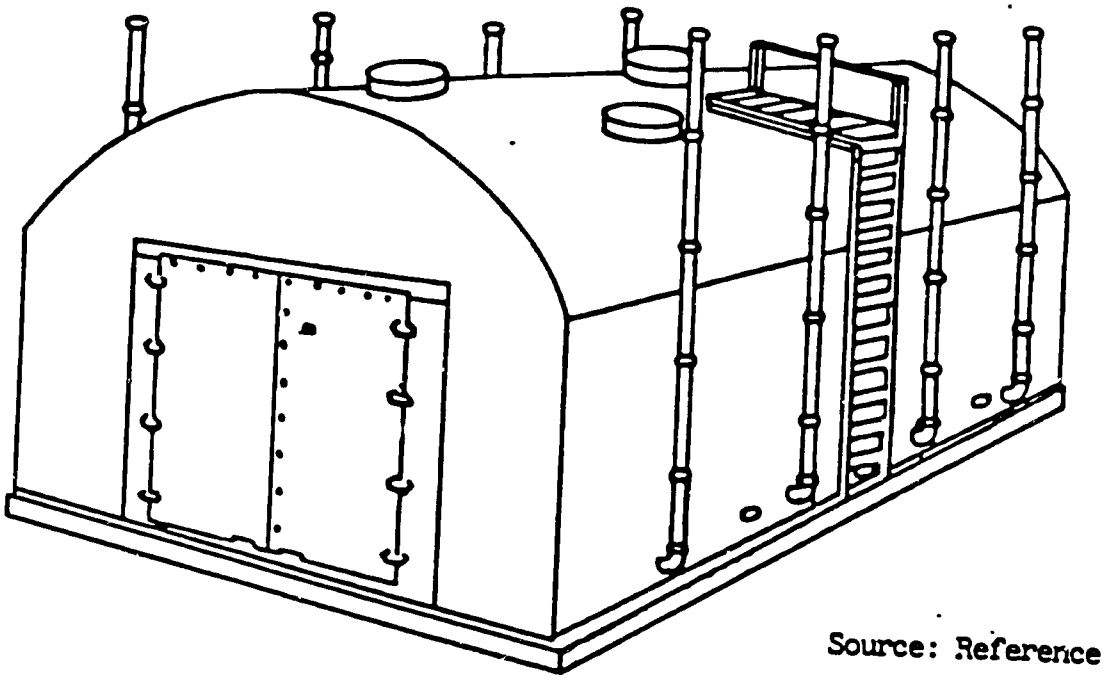

Source: Reference

Figure-3 "Missouri-type" charcoal kiln

Source: Reference - 1

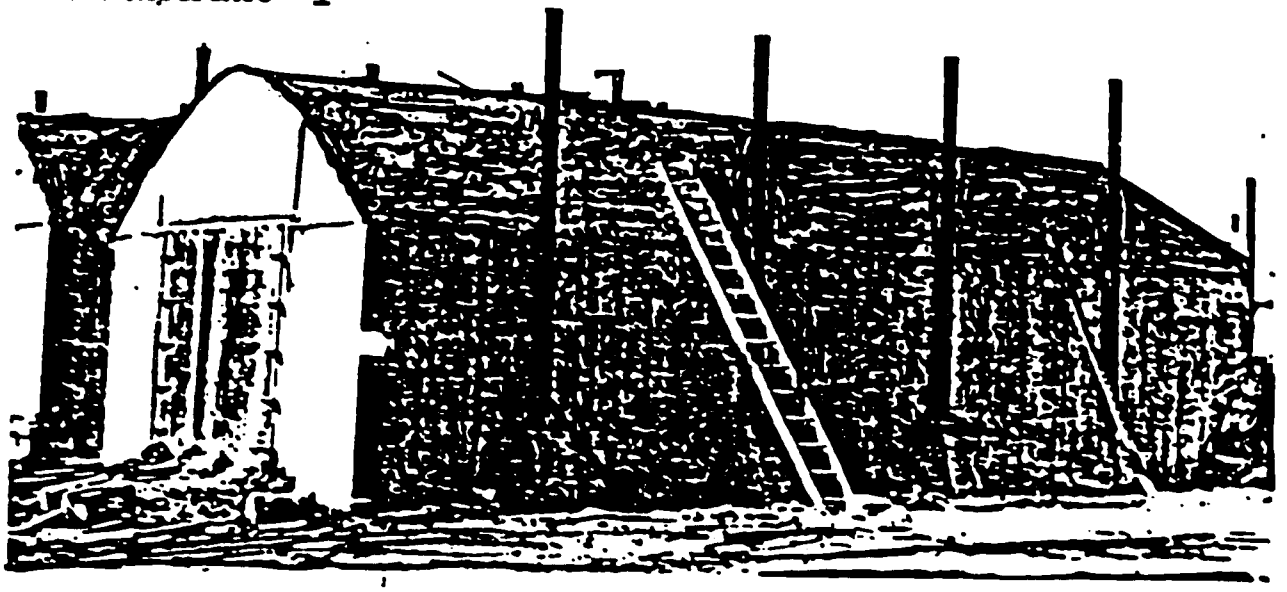

—Missouri-type batch kiln. (Photo courtesy of Bob Massengale, Missouri Department of Conservation.)

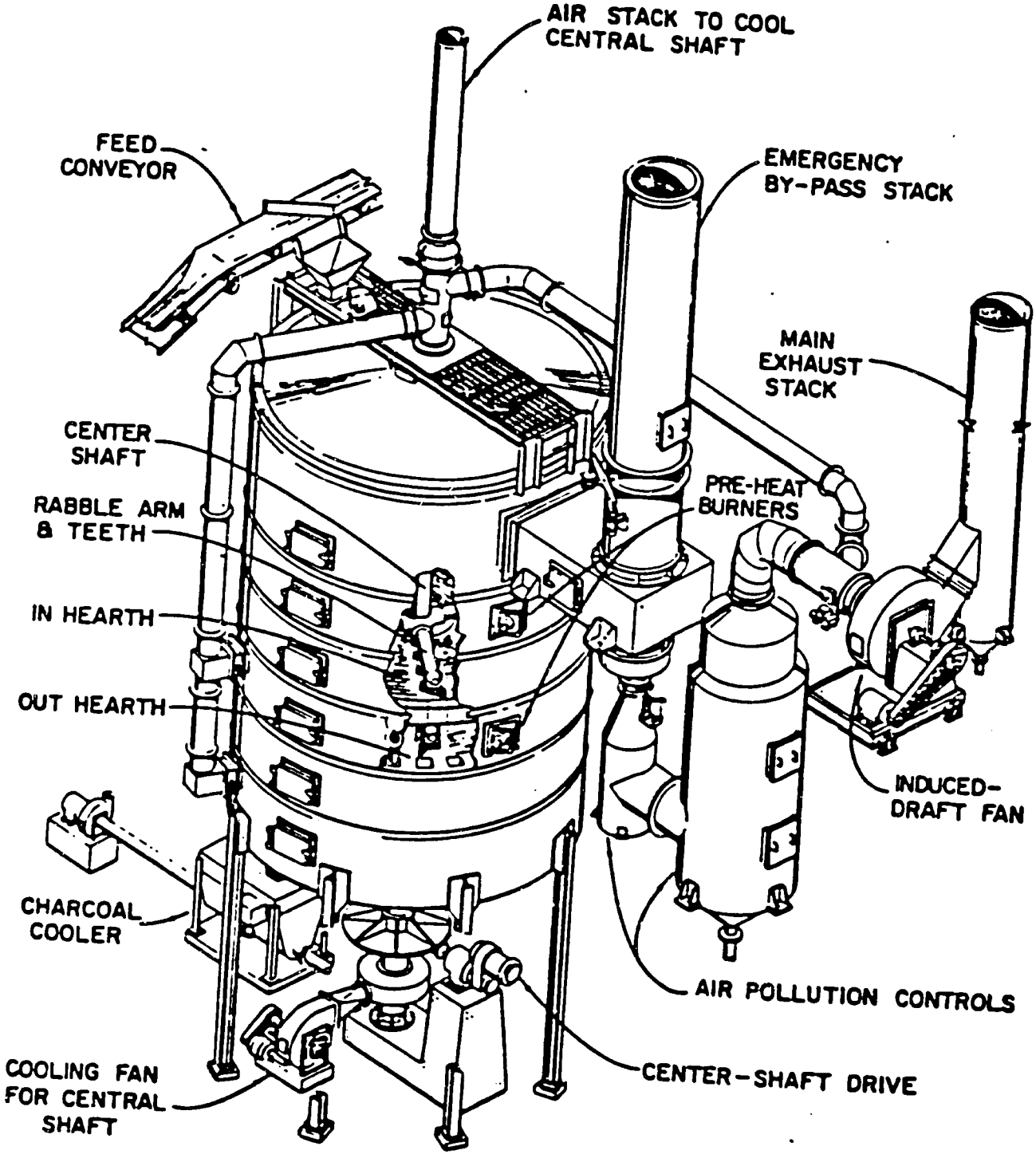

—Nichols-Herreshoff multiple hearth furnace for the production of wood charcoal. (Drawing from Nichols Engineering and Research Corporation.)

Source: Reference - 1

FIGURE- 4

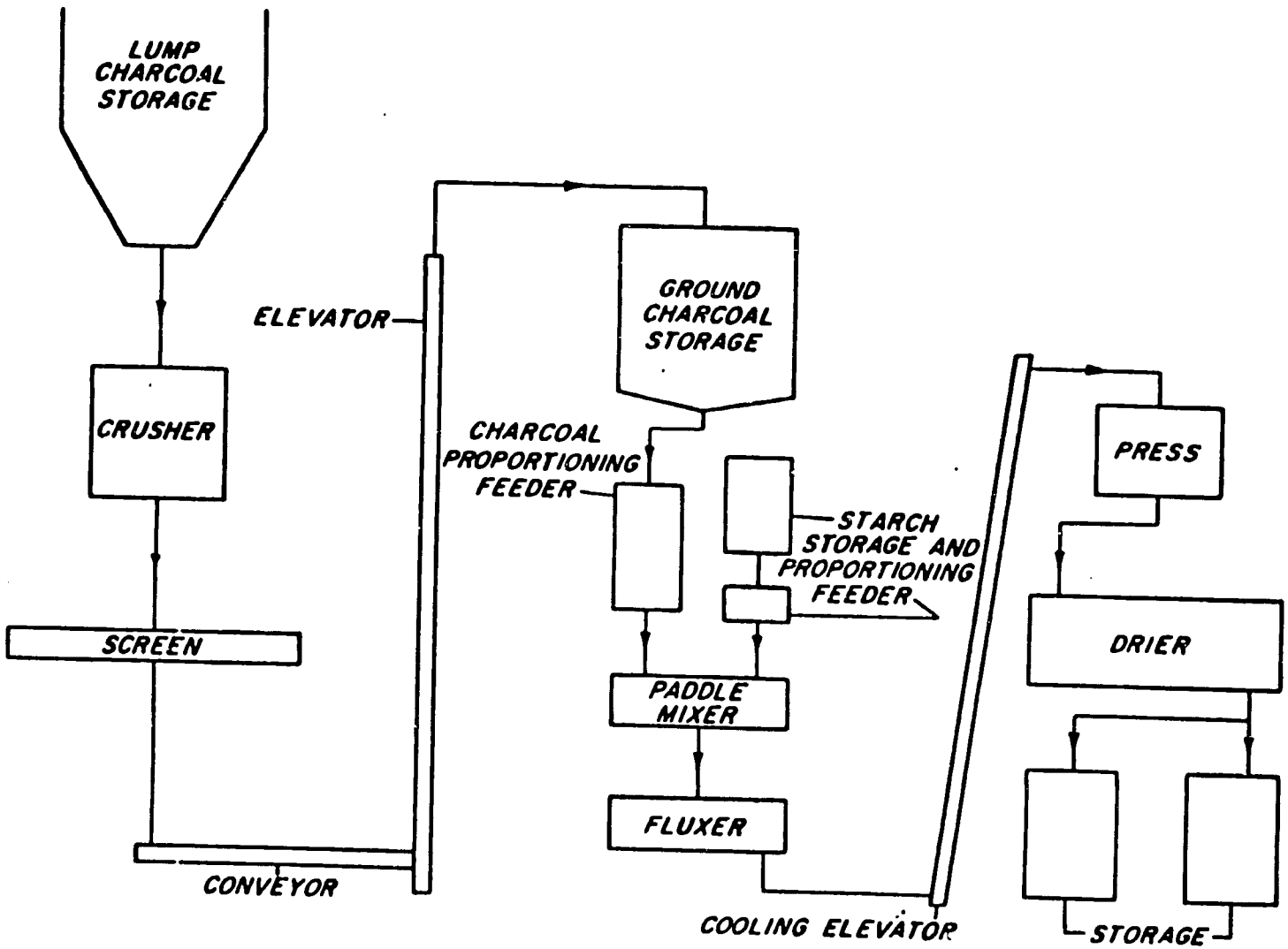

Figure ·Flow diagram of a commercial process for the manufacture of charcoal briquettes.

Source: Reference -1

FIGURE- 5

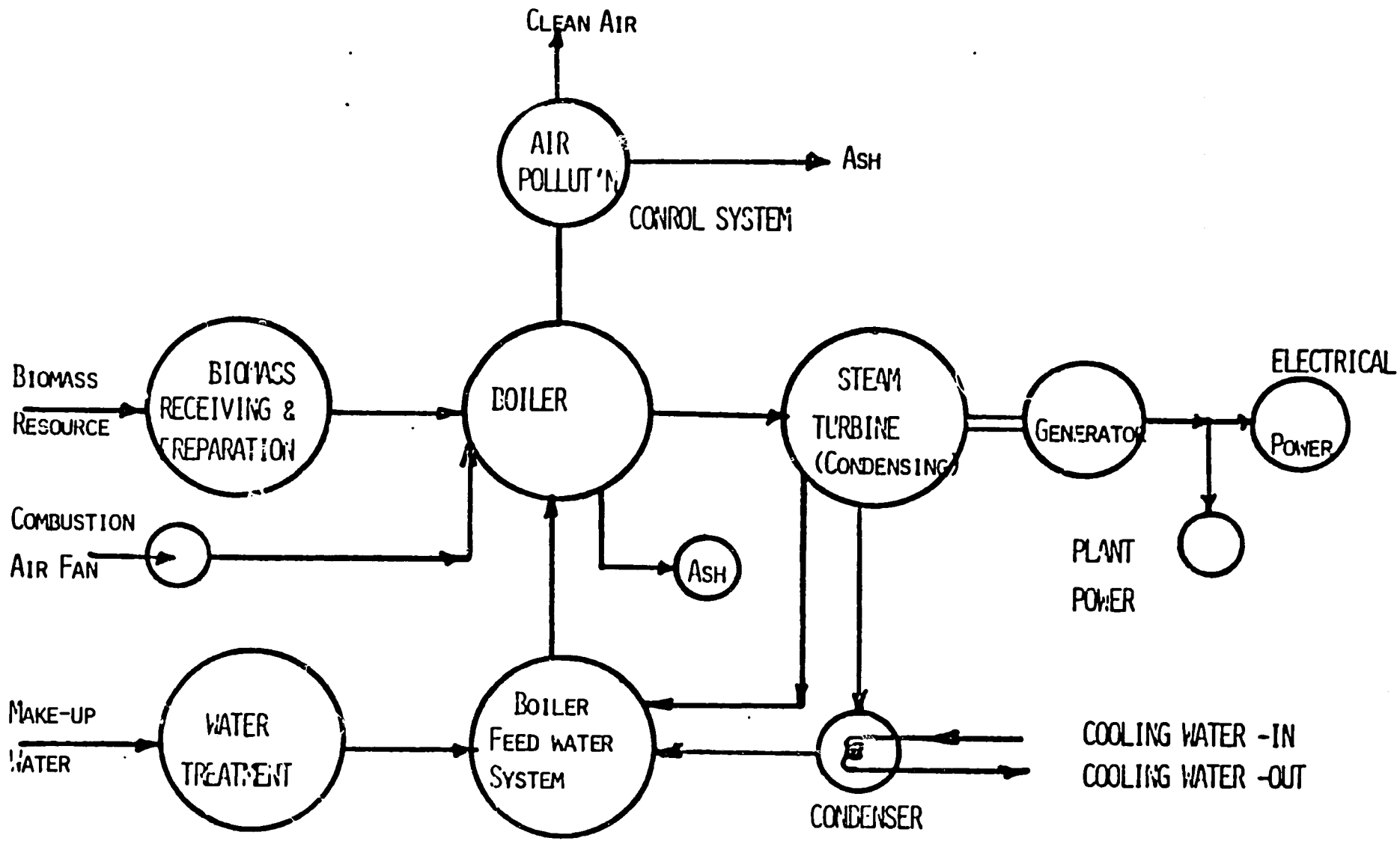

STEAM TURBINE DRIVEN ELECTRICAL POWER GENERATION BY DIRECT COMBUSTION OF BIOMASS (WOOD)

FIGURE-6

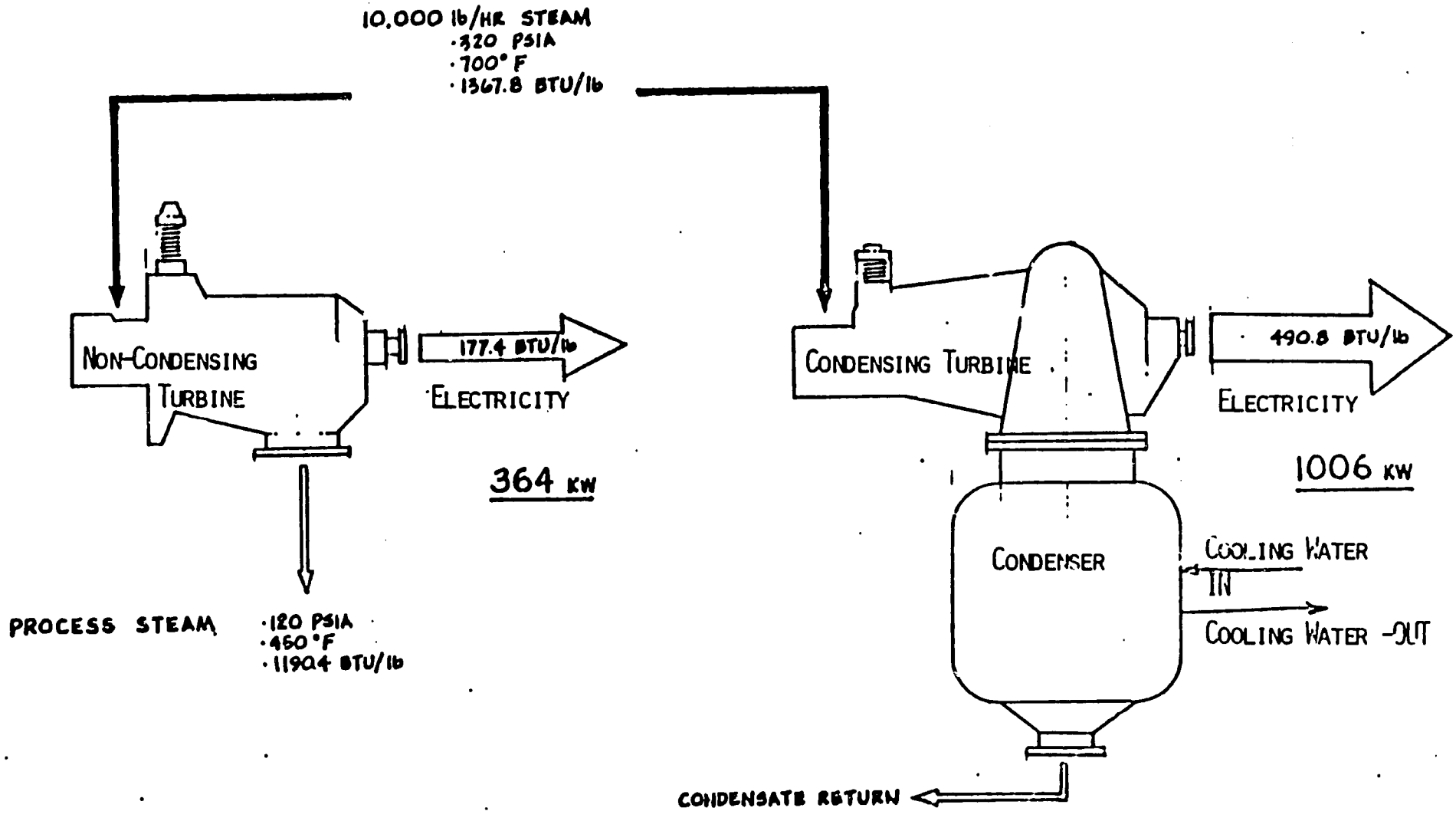

POWER GENERATION
FROM 10,000 lb/HR STEAM

FIGURE-7

SOURCE: REFERENCE-12

CONTACTS

AID

Philip R. Schwab, Director
Charles Blankstein, Capital Development Officer
Ken Ellis, Agricultural Officer
Allen Merrill, Energy Officer

Comision Nacional de Politica Energetica

Ing. Jose Ramon Acosta, Director
Ing. Franklin Viloria, Research and Development
Ing. Cesar Gomez, Biomass Energy
Ing. Emilio Urena, Solar Energy

Instituto Superior de Agricultura

Dr. Norberto Quesada, Director
Ing. Carlos Nunez, Research
Ing. Alberto Rodriguez, Forester
Sr. Wolfgang Arend, German Bilateral Aid

Falconbridge Mining Co.

Mr. J. T. H. Clelland, Manager Resources
Ing. J. Daniel Jimenez, Forestry Department

Indotec

Dr. Gilberto Concepcion, Director Analytical Services

SEA

Ing. Victor Fernandez, Extension Specialist
Ing. Juan Antonio Guzman, Chairman ODESIA

APPENDIX

Tree Seed

Estimated Quantities Required and	Cost
Eucalyptus sp. 2 lbs. @ 100 =	$ 200
Leucaena leucocephala 10 lbs. @ 25 =	$ 250
Casuarina spp. 1 lb @ 50 =	$ 50
Azadirachta indica 5 lbs. @ 25 =	$ 125
Acacia juliflora - collected locally	--
Acacia sp. 2 lbs. @ 25	$ 50
Cassia Siameaa 2 lbs. @ 25 =	$ 50
Albizia sp. 2 lbs. @ 30 =	$ 60

Some suppliers of seed:

Eucalyptus spp from:
Seed section, Division of Forest Research
CSIRO
P.O. Box 4008
Canberra, ACT 2600, Australia

Leucaena leucocephala (all varieties)
Michael D. Benge
DS/AGR, SA 18, Room 420, ADCA
AID
Washington, DC 20523
or
"Doubleharvest" c/o USAID/Port-au-Prince

Casuarina sp.
See Eucalyptus

Azadirachta indica -
"Doubleharvest" c/o USAID/Port-au-Prince

Cassia Siamea -
Centro Agronomico Tropical de Investigacion y Ensenanza (CATIE)
Turrialba, Costa Rica
or
Director, Institute of Tropical Forestry
P. O. Box AQ,
Rio Piedras, Puerto Rico 00928

WOOD TO ELECTRICITY CONVERSION

Conversion of wood to produce electricity involves the following major steps of operations:

- Wood receiving, preparations and feed handling systems, including dump trucks, live bottom receiving bins, conveyor to hoggers, disc screens, conveyors from hoggers to prepared fuel storage bin, live bottom feeders and conveyors to boiler feed hoppers.
- The boiler system including I.D. and F. D. Fans and drives, feed pumps, boiler water treatment facility, deaerator feed water heater, pollution control system, process instrumentations and controls, electrical power supply and ash handling system.
- Steam turbine (condensing or non-condensing)
- Electrical Generator (generally coupled to the turbine).

A schematic diagram of a condensing steam turbine driven electric power generation system by direct combustion of wood is shown in figure -6. Such a system is generally used by municipal utilities to generate power and has an average steam rate of 10 lbs steam per KW of electrical power generation. In omparison, a non-condensing turbine-generating system will have a steam rate of 27-30 lbs steam per KW of power. Figure 7 shows schematically the electrical power that could be generated from 10,000 lbs steam in a condensing and non-condensing (cogeneration or non-condensing).

It is noted from Figure 6 that for the same steam flow rate of 10,000 lbs per hour, a condensing system will generate 1006 KW of power, while the non-condensing unit will produce only 364 KW. This shows that the non-condensing units have lower efficiencies over condensing units.

USAID desires to demonstrate a small (100 to 150 KW) wood to electricity generation system. To generate say 150 KW of electricity, only 8,000 lbs of steam per hour will be needed. Boilers of this small size are generally of FIRETUBE design and superheating of the steam is not normally possible. At the same time expansion of saturated steam in a steam turbine is not very desirable.

A design cost estimate for a 150 KW steam cycle power plant using 250 Psig and dry saturated steam expanding to 15 psig is noted below:

ESTIMATE (Steam Cycle)

Plant Capacity - 150 KW (Gross)
130 KW (Net)

Plant Design: Wood to steam generation and steam to electricity production

Steam Condition: 250 Psig and dry saturated (Inlet to Turbine Condition)
15 Psig and Wet (Outlet condition from Turbine)
Non-condensing steam cycle.

Cost Factors:

1.	Site preparation	$ 15 K
2.	Fuel Preparations (Chips)	$ 20 K
3.	Building and Foundatons for Equipment Systems	$ 50 K
4.	Boiler system	$250 K
5.	Boiler system installation	$ 60 K

6.	Deaerator and water treatment	$ 25 K
7.	Single stage turbine-generator Unit - Installed cost	$ 60 K
8.	Air cooled condenser	$ 25 K
9.	Elec. switch gear	$ 5 K
10.	Dump truck	$ 20 K
11.	Piping systems installed	$ 10 K
12.	Feasibility study	$ 50 K
13.	Technical assistance (1 man-year)	$100 K
	Total	$690 K

As the estimated cost of the steam cycle power generation is above the allowable budget, an alternate concept estimate for power generation by wood gasification is presented:

WOOD GASIFICATION TO ELECTRICAL POWER GENERATION
ESTIMATE OF COST OF PROJECT

Cost Factors:

1.	Site Preparation	$ 15K
2.	Fuelwood Preparation & Storage	$ 20K
3.	Building and Foundation	$ 15K
4.	Gasifier, Feed System, and Engine-Generator Set	$180K
5.	Elec. Switch Gear	$ 5K
6.	Truck	$ 20K
7.	Technical Assistance	$100K
	Total	$355K
	Contingency 10%	$ 36K
	Total	$391K

CASE STUDY - 1

PLANT GATE PRODUCT CHARCOAL COST ESTIMATE

Industry Status: Small Scale BEEHIVE KILN Operation

Capacity: Seven (7) Kiln Battery Producing 463 Cubic Meter Charcoal Per Month

Cost Factors:	Cost/Cubic Meter Charcoal (Pesos = $)
Labor 2 men @ 130 Peso per month	0.55
Capital: 7 kilns @ 1500 peso each amortized over 6 years, no interest Govt. grant money (7 x 1500)/(463x12x6) =	0.31
Raw Material: Green Tree to produce 463m^3 of charcoal @ 65% by volume yield (463/0.65) = 712.3 m^3 2 Peso per m^3	3.07
Total Plant Gate Cost	3.93 Peso/m^3

Note: Cost of charcoal in the city ranges from 6.75 to 8 Peso per bag weighing approximately 35 KG. There is no wholesale price of charcoal in Santo Domingo, R.D.

CASE STUDY - 2

PLANT GATE PRODUCT CHARCOAL COST ESTIMATE

Industry Status: Large Scale Government Financing Charcoal Product operation (Missouri Kiln)

Capacity: 10 Units each utilizing 180 m^3 of green wood, producing 117 m^3 Of charcoal per unit per cycle of 21 days or 1670 m^3 of charcoal per month (20,000 m^3 of charcoal per year).

Cost Factors:	Cost/m^3 Charcoal (Peso = $)
Labor: 20 men @ 130 Peso per month	1.55
*Fringe Benefits @ 20% of Labor cost	0.31
Supervision @ 15% of labor cost	0.23
Administration @ 10% of Labor	0.16
Capital:	
10 Units @ 20,000 Peso Each = 200,000 Pesos Government Financing; No interest cost amortization 10 years.	
(200,000/1670x12x10) =	1.00
Cost of Green Wood	3.07
Handling and storage	0.10
Plant Gate Cost of Charcoal =	9.28 Peso/m^3

*Note: For small scale charcoal production scheme, no fringe benefit for the labor cost was considered. Because these workers are assumed to be farmers and self employed. For large scale production, the labor force has to salaried and therefore benefit cost has to be borne.

QUOTE FROM CABLE

SANTO DOMINGO 2651

16 APRIL 1981

5. Wood fuel development program ($1.2 million). This program will involve research and experimentation in wo areas: 1) appropriate tree species for growth as an energy source; and 2) efficient conversion technologies for different energy end uses of wood (small scale charcoal production, large scale charcoal production, electricity, alcohol, etc.) The program will be implemented over 5 years by the National Energy Commission and an agricultural research institute (IS) on land up to 2,000 acres owned by the latter (see PID).

A. For PP development, the mission will require the services of 2-3 experts in forestry and tree research and wood conversion technologies. Again, it is important that one of the experts serve as team coordinator or leader. Spanish is essential.

B. The specific tasks of the team would be:

1. To develop in detail, along with mission, ISA and Energy Commission Staff, a research methodology for testing the performance and requirements of different tree species which could be grown for wood fuel. This will require pre-selection of 4-5 different species to be experimented with (based on internationale xperience and preliminary performance data in the D.R.), and careful planning of all research and monitoring activities

such as nursery development transplanting, repetition planting, spacing, tending, harvesting, coppicing, etc., one objective of the tree research program will be to render sufficient wood available for testing of conversion technologies by year 3 of the program; and

2. To design a program of research, testing and demonstration of different wood conversion technologies which could eventually be utilized on a wide scale. This program will have to be carefully time coordinated with the tree research program to insure adequate amounts of promising tree species for continuous testing/operation.

C. Careful cost estimates of all activities to be carried out under the two programs will be required. The full team should plan to be in the DR for 4-5 weeks.

QUOTE FROM ALTERNATIVE ENERGY SOURCES PID,

DOMINICAN REPUBLIC

4. Wood Fuel Development Program ($1,500,000)

There are several possible approaches to developing wood as a fuel source in the Dominican Republic. One approach might involve wood and charcoal production by small farmers as a cash crop. Another approach might involve village or community wood lots. A third approach, which has been examined by USAID in more detail, involves large scale energy farms for production of charcoal or wood fired electricity. The AID financed Energy Farm Study completed last year concluded that the potential for energy farms in the Dominican Republic is substantial and that a tree farm development program should be initiated as soon as possible. The study estimates that, under even the lowest productivity assumptions, fast-growing trees grown on dry forest land which is not cultivated or under plans to be cultivated, could produce 200 MW of electricity continuously. The electricity output, of course, would be reduced to the extent that the trees were used instead for charcoal production or other uses. Large scale tree farms using labor intensive methods of production also offer the benefit of large scale employment creation. The Energy Farm study, for example, estimates that 21,237 workers would be needed to operate a 50 MW sized energy farm.

The Energy Farm Study has generated considerable interest inside and outside the government in the possibility of energy farm development. Based on the findings of the study, ISA, in collaboration with SEA, FORESTA and the Energy Commission, has begun a pilot activity on a 16,000 tarea site owned by the Institute near Mao. The activity is limited to preliminary experimentation with some of the fast growing tree species recommended in the study. The Commission and ISA have requested AID assistance for an expanded pilot project effort.

Before even a fraction of the potential for energy farms or other approaches to wood fuel production and utilization can be realized, however, a good many questions will have to be answered regarding the most appropriate types of trees for different energy purposes, as well as the most efficient technologies for converting the trees grown to different energy end uses. For example, what species are

best suited for fast growth in Dominican dry forest conditions? What growth performance can reasonably be expected? Will natural rainfall suffice or will irrigation be required for efficient performance? What nutrients or fertilizers, if any, will be required to maintain productivity of the soil? What planting, cultivating and harvesting patterns are most appropriate on a large scale? What trees are best suited for interplanting with other small farm crops? If the purpose of the wood grown is electricity production, what kind and size of conversion/generation technology will work reliably in a rural area? What is the best method for harvesting, transporting, chipping and storing the wood before conversion? What kind of pre-drying will be necessary? If the final use of the wood is for charcoal production on either a small or large scale, or perhaps alcohol production, a similar set of questions arises regarding the most efficient conversion technology for the particular end use.

This project will finance a program of research and experimentation to be carried out by ISA and the Energy Commission in 1) tree production for energy and 2) technologies for converting wood to energy. The program will be designed in such a way that at the end of five years sufficient information will have been obtained in each of these areas so that large scale efforts in fuel wood production and utilization (involving energy farms, small scale tree production, or perhaps both) can be gotten underway.

It is recognized that other issues will also have to be dealt with eventually in the implementation of fuel-wood programs, such as: the organization and management of a large number of workers required for large scale, labor intensive energy farm operations; wage rates for different aspects of the operation; and effects of a large labor force on the surrounding community, in terms of required infrastructure and housing, increased demand for food and other resources, environmental impacts, etc. Before these operational issues can be dealt with effectively, however, fundamental questions about the characteristics of the trees to be grown and the nature and efficiency of end use technologies will have to be answered. For example, the growth rate of a particular tree species, together with the efficiency of a particular conversion technology, will determine the amount of land required for producing wood for a particular end use. The amount of land required will in turn influence the size and organization of the labor force and other operational aspects of the effort.

During intensive review, 5-6 different tree species will be preselected for testing under this project. The trees will be selected on the basis of experience in other countries with similar climatological and soil conditions as well as on preliminary data on tree performance in the Dominican Republic. A careful research methodology will also be developed during intensive review which will allow all necessary data on tree performance to be collected and also allow,

beginning in the third year of the project, sufficient production of wood from promising tree species for use in the testing of different conversion technologies. Under one option being considered, the tree research program would involve the establishment of a nursery on about 30 tareas, transplanting and repetitions on experimental plots comprising an area of about 200 tareas, and larger scale planting of different species on an area of about 600-1000 tareas. As trees are harvested from the larger area beginning in year three, they would gradually be replaced by species which have proven to be more promising on the basis of performance in the experimental area. By the end of year five, it is expected that the entire larger area would be planted with the one or two most promising species.

In terms of wood conversion technologies, four possible end uses of wood for energy will be examined under the project. First is charcoal production on a small scale. While a considerable amount of charcoal is now produced in the Dominican Republic, the method used is largely one of earth mound burning of wood in small quantities. Research and experience elsewhere indicates that this may not be a very efficient method of converting wood to charcoal. ISA and the Energy Commission will, therefore, research, test and demonstrate more efficient methods for converting small amounts of wood to charcoal which could be employed by small farmers or entrepreneurs in the Dominican Republic on a wide scale. The testing will be carried out with the different tree species being experimented with, so that any discrepancies in conversion efficiency can be determined. By the third year of the project, sufficient wood should be produced under the tree research program for this purpose.

The next end use of wood to be examined is charcoal production on a large scale. Charcoal could eventually be produced, for example, on private plantations or large scale energy farms. The most efficient technologies for converting large quantities of wood to charcoal continuously will probably differ from those used for small scale charcoal production. ISA and the Energy Commission will examine technologies currently being used for large scale production of charcoal (such as the Jack Daniels distillery in the United States) and select the most promising technologies for testing, adaptation if necessary, and demonstration in the Dominican Republic.

For production of electricity from wood, several technologies have been developed in the United States and elsewhere, although no technologoy has been realiably tested and demonstrated for use in isolated rural areas. Different approaches to electricity production include pyrolysis, gasification of wood and direct combustion. The capital cost of electricity generating equipment varies greatly with size and approach. As the state of the technology is still very new, these costs can be expected to come down in the years ahead.

One technology being developed in the United States, which involves gasification of wood and generation of electricity through an internal combustion-powered turbine, claims to be scale independent. That is, a unit for generating 50 KW would involve the same technology and approach as a unit for generating 5 MW. The quoted cost of all equipment required for a 200 KW operation of this nature is $48,500, which is indeed attractive, although the Mission considers this cost unfirm and somewhat optimistic.

Under the project, ISA and the Commission will research, test and demonstrate one or possibly two technologies for generating electricity from wood on a large scale. Emphasized will be technologies which are relatively scale independent so that once tested and proven, they could be applied in operations of different sizes. By the fourth year of the project, sufficient wood should be available through the tree research program for continuous operation of large scale charcoal and electricity production technologies.

Finally, ISA and the Commission will experiment with methods of converting wood to alcohol, which could in turn be used as a fuel, either directly or in a gasohol mixture. Since large scale production of alcohol is extremely expensive and capital intensive, the project will focus on small scale production of alcohol for individual or small community uses.

All testing of wood conversion technologies will take place on the same ISA land near Mao, adjacent to the area being devoted to tree research and experimentation.

The cost of the tree research program, including establishment of the nursery, seeds, tools, land clearing and all labor is estimated at $500,000. The cost of the wood conversion technologies program, including all equipment, materials and labor, is estimated at $1,000,000. These amounts include long term technical assistance to be provided to ISA and the Energy Commission.