JM
333.79
E56
v. 3, part 2

PN-AAJ-425

ESI
REPORT
EA-80-0101-3

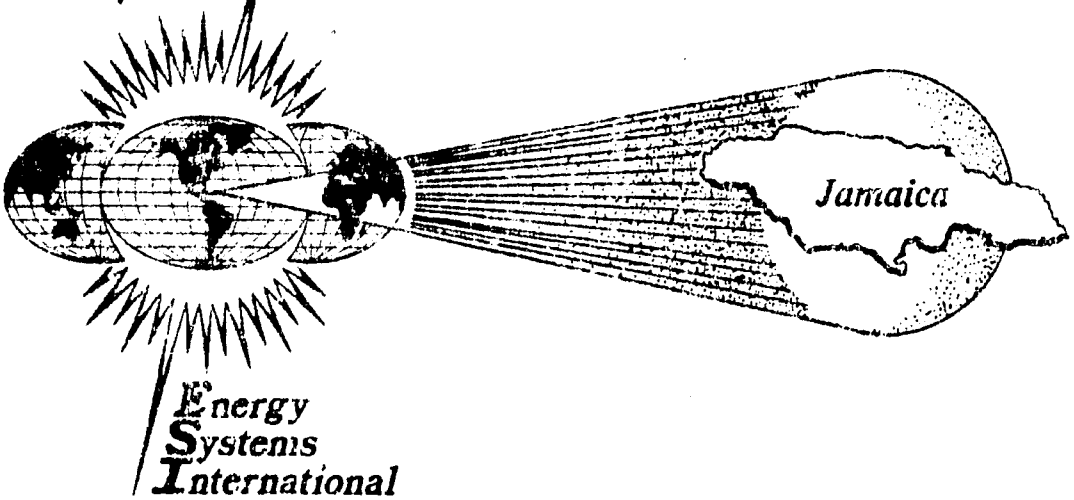

Preliminary Energy Sector Assessments of Jamaica

Volume III
Renewable Energy:

Solar Energy -- Commercial & Industrial
Solar Energy — Agricultural
Biogas Applications
Energy Conversion From Waste

Prepared For

Department of State
U.S. Agency for International Development

Under Contract No. AID-532-79-11

JANUARY 1980

REPRODUCED BY
NATIONAL TECHNICAL
INFORMATION SERVICE
U.S. DEPARTMENT OF COMMERCE
SPRINGFIELD, VA. 22161

BIBLIOGRAPHIC DATA SHEET

1. CONTROL NUMBER: PN-AAJ-425

2. SUBJECT CLASSIFICATION (695): AP00-0000-G326

3. TITLE AND SUBTITLE (240)

Preliminary energy sector assessments of Jamaica, v. 3, renewable energy: solar energy, agricultural

4. PERSONAL AUTHORS (100)

5. CORPORATE AUTHORS (101)

Energy Systems Int.

6. DOCUMENT DATE (110): 1980

7. NUMBER OF PAGES (120): 70p.

8. ARC NUMBER (170): JM333.79.E56

9. REFERENCE ORGANIZATION (180)

ESI

10. SUPPLEMENTARY NOTES (500)

(Set includes: PN-AAJ-422 - PN-AAJ-429)

11. ABSTRACT (950)

12. DESCRIPTORS (920)

Jamaica
Solar energy
Renewable resources
Alternative energy
Assessments
Agricultural research
Crop driers
Solar radiation
Heat treatment
Drying
Conversion
Energy needs

13. PROJECT NUMBER (150)

14. CONTRACT NO.(140): AID-532-79-11

15. CONTRACT TYPE (140)

16. TYPE OF DOCUMENT (160)

AID 590-7 (10-79)

50272-101

REPORT DOCUMENTATION PAGE	1. REPORT NO. PN-AAJ-425	2.	3. Recipient's Accession No. PB82 249541

4. Title and Subtitle
Preliminary Energy Sector Assessments of Jamaica
Volume III: Renewable Energy: Part II: Solar Energy - Agricultural

5. Report Date January 1980

6.

7. Author(s)

8. Performing Organization Rept. No. EA-80-0101-3b

9. Performing Organization Name and Address
Energy Systems International
8301 Greensboro Drive, Suite 20
Mclean, VA 22102

10. Project/Task/Work Unit No.

11. Contract(C) or Grant(G) No.
(C) AID/532-79-11
(G)

12. Sponsoring Organization Name and Address
United States Agency for International Development
Washington, D.C. 20523

13. Type of Report & Period Covered

14.

15. Supplementary Notes Other Volumes in this study are available as: SET: PB82-249509
I: Executive Summary: PB82-249517
II: Economic Assessment: PB82-249525
IIIA: Solar Energy, Comm & Ind: PB82-249533
IIIC: Biogas Applications: PB82-249558
IIID: Energy from Waste: PB82-249566
IV: Coal Prefeasibility Study: PB82-249574
V: Electric Utility Rates: PB82-249582

16. Abstract (Limit: 200 words)

Because heavy dependence on costly imported fuel is greatly hindering Jamaica's economic development, USAID/Jamaica and the Government of Jamaica sponsored a preliminary assessment study to identify viable alternative energy options. Technological studies were published in three volumes (with volume three being in four parts, for a total of six volumes), to which two introductory volumes were added, providing, respectively, an executive summary of the entire assessment and an economic assessment of the individual areas. This study, part two of volume three, is concerned with the use of solar heat for drying agricultural products (crops, timber, and fish). The study finds that Jamaica has an ideal climate for solar agricultural product drying with the following methods offering the greatest promise: sun drying using open barbeques; drying in transparent buildings (with or without attached collectors) for small operations; new drying systems using solar air heaters with forced air drying; preheating air for existing commercial fossil-fueled dryers; and fish drying via chemical dehydration with solar regeneration of the chemical. The primary needs are to develop and construct environmentally suitable solar dryers and to train engineers in solar system design and installation. Specific recommendations include establishment of 10 climatic stations to record solar radiation and ambient temperatures; development of air-type solar collectors; research and development on agricultural product drying and on cost-effective drying methods; encouragement of sun drying; construction of solar-heated, forced-air dryers (and providing the training necessary for design, construction, and operation); and construction of supplemental solar heaters for preheating at commercial drying facilities. Increased use of agricultural solar drying would provide a better supply of food products throughout the year and would also improve Jamaica's balance of payments. Appendices include a 15-item (1970-79) bibliography; a list of interviewees; data on various solar applications including computed solar radiation, solar preheating of air for rotary drum drying and agricultural product drying; and a summary of a splinter group discussion.

17. Document Analysis a. Descriptors

b. Identifiers/Open-Ended Terms
Developing Country Application

c. COSATI Field/Group

18. Availability Statement:	19. Security Class (This Report)	21. No. of Pages
Release Unlimited	Unclassified	
	20. Security Class (This Page) Unclassified	22. Price

(See ANSI-Z39.18) See Instructions on Reverse OPTIONAL FORM 272 (4-77) (Formerly NTIS-35) Department of Commerce

PRELIMINARY
ENERGY SECTOR ASSESSMENTS OF JAMAICA

CHAPTER 4

SOLAR ENERGY -- AGRICULTURAL

for

UNITED STATES AGENCY FOR INTERNATIONAL DEVELOPMENT

CONTRACT NUMBER AID 532-79-11

TASK 3b

ENERGY SYSTEMS INTERNATIONAL
8301 GREENSBORO DR., SUITE 30
MCLEAN, VIRGINIA 22102

JANUARY 1980

FOREWARD

The eight reports of the Preliminary Energy Sector Assessments of Jamaica conducted by the United States Agency for International Development Energy Team are contained in the following five volumes:

Volume	I	Executive Summary
	II	Economic Assessment
	III	Renewable Energy:
		(a) Solar Energy - Commercial & Industrial
		(b) Solar Energy - Agricultural
		(c) Biogas Applications
		(d) Energy Conversion from Waste
	IV	Coal Prefeasibility Study
	V	Electric Utility Rate Analysis

These studies were initiated by the USAID in conjunction with the Government of Jamaica to further the objectives of Jamaica's Five Year Development Plan and its Energy Sector Plan. The studies also represent USAID's first energy assessment of a developing country.

Due to the diverse technology requirements and the high degree of specialization required by each of the studies, a United States Energy Team of experts was assembled. The individual team members were selected based upon a demonstrated balance between academic and "hands-on" experience in the specific study area.

Energy Systems International (ESI), had overall responsibility for systems planning, project management and integration of all elements of the Preliminary Energy Sector Assessments.

These reports should not be considered as the final product of any study area, but as baseline documents to be used for identifying specific energy programs and projects for implementation in the near-term to assist Jamaica in alleviating its critical energy problem.

Any comments or questions concerning this study should be directed to:

Energy Systems International
8301 Greensboro Drive, Suite 30
McLean, Virginia 22102
(703) 827-0303
Telex: 903039

ACKNOWLEDGMENTS

The success of the Preliminary Energy Sector Assessments of Jamaica was assured through the joint cooperation, professionalism, competence and diligence of the entire U.S. Energy Team and their key Jamaican counterparts. The assessment was a concentrated effort over a fifteen week period in Kingston, Jamaica, during which many government agencies, institutions, private sector organizations and individuals became involved and generously supported study development. The many excellent people involved are too numerous to mention herein, but a few have been singled out for recognition because their outstanding effort and support helped to provide study continuity and progress.

Special thanks go to Dr. Henry G. Lowe, Director, Energy Division of the Ministry of Mining and Natural Resources and to the MMNR staff for providing the inspiration and leadership from the Jamaican side to ensure that there was enthusiastic support and contributions to this study from all Jamaican counterparts. A special note of appreciation goes to Mr. Roddy Ashby for his capable technical guidance, support and collaboration with the energy team during the Solar Energy - Agricultural Study.

Special thanks must also be given to the United States Agency for International Development, in particular, Mr. Jerome Hulehan, General Development Office, USAID Kingston, Jamaica Mission and Dr. Jerome Bosken, Deputy Director, Energy Office, USAID Headquarters, Washington, D.C., for their encouragement and support of the project and for their assistance throughout the study.

Most importantly, special acknowledgment is given to those who took the time to make important contributions to the study through their interviews and discussions with the U.S. Energy Team members. Some of these people and organizations are identified in Appendices C, E, and F, of this Chapter.

CREDITS

Dr. Blaine F. Parker of the University of Kentucky was the principal investigator for this study. Energy Systems International provided guidance of the assessment, assistance in report preparation and final product delivery.

TABLE OF CONTENTS

PAGE

4.1 EXECUTIVE SUMMARY....4- 1
4.1.1 Introduction....4- 1
4.1.2 Terms of Reference....4- 1
4.1.3 Background Information....4- 1
4.1.4 Study Method....4- 2
4.1.5 Findings....4- 2
4.1.6 Conclusions and Recommendations....4- 3

4.2 INTRODUCTION....4- 5

4.3 TERMS OF REFERENCE....4- 6
4.3.1 Objectives....4- 6
4.3.2 Schedule....4- 7

4.4 BACKGROUND INFORMATION....4- 8
4.4.1 Solar Energy Use in Drying Agricultural Products....4- 8
4.4.2 Types of Collectors for Crop Drying....4- 8
4.4.3 Status of Air Collector Development....4- 8
4.4.4 Methods of Solar Drying....4-10
4.4.5 Potential Application of Solar Drying in Jamaica....4-11

4.5 STUDY METHOD....4-13
4.5.1 Personnel Interviewed....4-13
4.5.2 Sites Visited....4-13
4.5.3 Baseline Engineering Designs....4-13
4.5.4 Other Studies....4-14
4.5.5 Pertinent Data Utilized and Reviewed....4-14

4.6 FINDINGS....4-15
4.6.1 Availability of Solar Radiation Data....4-15
4.6.2 Solar Air Heater Development....4-15
4.6.3 Energy Use for Drying Agricultural Products....4-15
4.6.4 Sun Drying of Agricultural Products....4-15
4.6.5 Solar Heated Air Drying....4-16
4.6.6 Solar Preheating of Air for Commercial Dryers....4-16
4.6.7 Fish Drying....4-16

PAGE

4.7 DISCUSSION OF FINDINGS.....4-17
4.7.1 Solar Radiation Data.....4-17
4.7.2 Solar Air Heaters.....4-17
4.7.3 Energy Use for Drying Agricultural Products.....4-19
4.7.4 Sun Drying of Agricultural Products.....4-19
4.7.5 Solar Heated Air Drying.....4-20
4.7.6 Solar Preheating of Air for Commercial Dryers.....4-23
4.7.7 Fish Drying.....4-23
4.7.8 Baseline Designs of Solar Collectors for Agricultural Applications.....4-24

4.8 CONCLUSIONS AND RECOMMENDATIONS.....4-28
4.8.1 Present Solar Energy Problem.....4-28
4.8.2 Specific Recommendations.....4-28
4.8.3 Recommended Programs.....4-29

4.9 REFERENCES.....4-34

4.10 APPENDICES.....4-36
A. Terms of Reference.....4-37
B. Personnel Interviewed.....4-38
C. Computed Solar Radiation Data.....4-42
D. Development of Solar Air Heaters.....4-44
E. Solar Grain Dryer Baseline Design.....4-48
F. Feasibility for Solar Preheating of Air for Rotary Drum Drying.....4-52
G. Feasibility for Solar Preheating of Air for Drying Brewer's Grain.....4-54
H. Energy Analysis of Tumeric Drying.....4-55
I. Research and Development of Agricultural Products.....4-58
J. Final Report Conference - Splinter Group Discussion.....4-60

LIST OF TABLES

TABLE	TITLE	PAGE
4-1	Recommended Program Schedule and Costs for Solar-Heated Air Drying	4-31
4-2	Data Used in Assessment of Solar-Heated Air Drying	4-32
4-3	Total Solar Radiation on a Horizontal Surface	4-43

LIST OF FIGURES

FIGURE	TITLE	PAGE
4-1	Air Type Collectors	4- 9
4-2	Exploded View of Collector with Air Flow on Both Sides of Absorber	4-45

4.1 EXECUTIVE SUMMARY

4.1.1 Introduction

As the world supply of fossil fuel decreases, most countries are in the process of re-evaluating their energy use patterns and developing various conservation techniques. Additionally, many of the developing nations are exploring renewable energy sources in an attempt to reduce the costs and requirements for imported petroleum. In Jamaica, where average daily solar radiation is very favorable, the collection of heat with flat plate collectors offers great potential for the drying of agricultural products.

The need for drying agricultural products exists on large and small farms and in commercial-sized operations. Agricultural product drying provides quality export products and is beneficial for preserving food for use between harvests. Sun drying is effective in small batches and for the initial step in commercial operations. For commercial drying to low moisture contents, however, the quantity of solar energy per unit area is not sufficient to provide the needed rate of drying. The collection of solar heat over larger areas than the barbeque (a horizontal surface used for sun drying of products) must be accomplished to gain higher temperatures and larger quantities of heat for commercial applications. A new technology needs to be introduced to use the abundant sunshine for forced-air drying of certain agricultural products. Currently, no forced-air drying is used and no air-type solar collectors are manufactured or used in Jamaica.

4.1.2 Terms of Reference

As defined by the contract Terms of Reference, the purpose of this section of the energy study is to assess the potential of using solar energy in Jamaica for drying agricultural products and to identify the technical and economic feasibility of implementing near-term solar energy projects. The following products were included in the assessment: corn, peas, beans, peanuts, onions, pepper, coffee, cocoa, tumeric, cassava, timber and fish.

4.1.3 Background Information

The need for drying agricultural products was recognized in the original Terms of Reference prepared by the Ministry of Mining and Natural Resources. The task was to match the needs for drying in Jamaica to the technical potential of collecting solar energy. Collector design,

development and manufacture is essential if solar agricultural drying is to be used for preserving food and providing a constant food supply during the months between harvests.

4.1.4 Study Method

Numerous personnel interviews and site visits were conducted during the study in Jamaica. These visits provided direct information on product drying needs and current energy usage. As a result of the data obtained, the following drying methods demonstrate the greatest potential for use in the Jamaican environment:

(1) drying in the sun using open barbeques;
(2) drying in transparent buildings (with or without attached collectors) for small operations;
(3) new drying systems using solar air heaters with forced-air drying;
(4) preheating air for existing commercial fossil fueled dryers; and
(5) fish drying via chemical dehydration with solar regeneration of the chemical.

4.1.5 Findings

4.1.5.1 Solar Radiation Data

A two to three year record of hemispherical solar radiation is available only for Kingston. A method of computing solar radiation from climatic data agreed with the measured hemispherical radiation with a mean difference of only 4 percent. Solar radiation and climatic data are needed at more stations over a longer period of time if solar energy systems are to be designed efficiently and with minimum risk of failure.

4.1.5.2 Solar Air Heaters

In order to utilize solar-heated air for drying agricultural products and heating water, air-type solar collectors which are suitable for construction and use in Jamaica must be developed.

4.1.5.3 Drying Research and Development

To maximize product quality, a research and development project is needed to study drying methods peculiar to Jamaica in order to establish the best configuration for product exposure to the heated air and to determine optimum drying rates and temperatures. This R&D effort should include a literature study, visits to other countries,

engineering design and economic analysis, construction and operation of prototypes and laboratory-scale drying experimentation.

4.1.5.4 Sun Drying

Sun drying of agricultural products in small quantitites and the initial commercial drying of large quantities are well developed and energy efficient. The study found that sun drying very high moisture products to a medium or low moisture content was efficient and profitable, and should be encouraged.

A thorough study of small (100 to 500 lbs/batch) drying systems should be made using an engineering/economic approach as part of a research and development project to maximize the use of sun drying in Jamaica.

4.1.5.5 Solar-Heated Air Drying

Solar-heated forced-air drying of agricultural products needs to be developed in Jamaica. Whenever sufficient quantities of legumes or grains are assembled, solar-heated air dryers should be considered to ensure preservation.

Designs of several 140°-170°F solar air heaters examined in this study are highly efficient.

4.1.5.6 Solar Preheaters

Commercial plants which dry cocoa, coffee, cassava, brewer's grain, tumeric and lumber have large buildings with sloping roofs, which are considered excellent locations for solar air-type collectors for use as air preheaters.

4.1.6 Conclusions and Recommendations

Jamaica has an ideal climate for utilizing solar energy for drying agricultural products. The primary needs are to develop and construct solar collectors, and train engineers in solar system design and installation. Solar preheating of air for commercial dryers, however, will not be feasible until collectors are developed which are suitable for, and durable in, the environment of Jamaica. Also, solar drying R&D is necessary to optimize solar drying technology that is peculiar to the Jamaican climate. Little of such required R&D has been accomplished in the U.S. or other countries as of this time.

The following specific recommendations address the current needs:

(1) Establish 10 climatic stations to record solar radiation levels and ambient temperatures;

(2) Begin immediate development of solar-heated air collectors using materials which are suitable to tropical climates;

(3) Establish research and development programs for drying of agricultural products with the aim to develop technically sound methods of solar-heated air drying;

(4) Encourage sun drying of agricultural products, particularly those of high moisture content; conduct research and development to determine most cost effective drying methods;

(5) Design and construct solar collector systems for use as preheaters in commercial drying facilities;

(6) Provide the necessary training for the research, development, design, construction and operation of solar air heaters and forced-air dryers for the climate of Jamaica;

(7) Begin program to develop and construct solar-heated air drying systems for community use when sufficient quantities of products are ready for drying from one or more farms.

4.1.6.1 Recommended Program for Drying Foods and Agricultural Products

A solar agricultural drying program should begin immediately with:

(1) research and development of solar-heated air drying;

(2) the development of air-type solar collectors.

These two projects should each be funded for five years at approximately U.S. $90,000 per year with an additional first year expenditure of U.S. $30,000 for materials and supplies. During the first year, one grain drying unit should be designed and constructed. During the second year, four more grain-type dryers should be constructed. Design should also commence on air-type solar collectors for preheating commercial dryers. Table 4-1 in Section 4.8.3 identifies the funds required for the recommended program.

4.2 INTRODUCTION

Man's progress throughout history has been closely related to the availability and use of energy. The effective use of energy for residential, commercial, industrial and transportation purposes has assisted man in developing and expanding these end use sectors for the benefit of a greater portion of the population. Philip Hauser, a well-known sociologist at the University of Chicago, stated over twenty years ago that the standard of living achieved by the various nations is directly proportional to their per capita use of energy. As all peoples have striven to improve their standard of living, energy use has increased dramatically. Few noted that the fossil fuel energy supply was finite. By the early 1970s, recognition of the limited energy supply played a major role in the ability of the oil rich nations to drastically increase the worldwide price of energy. All countries must now reevaluate their energy use patterns. In Jamaica, where practically all of the energy used for residential, industrial, commercial and transportation sectors is imported, the need to conserve energy and to develop alternative sources of energy has become critical.

Jamaica's agricultural sector is a major factor in the country's economy and the need exists to examine methods to use solar energy for drying foods and agricultural products. Jamaica's climate and average solar radiation figures make the collection of heat from solar energy attractive because solar collectors operate at higher efficiencies. Therefore, Jamaica offers ideal conditions for the use of practical, proven, low cost solar systems for drying agricultural products.

4.3 TERMS OF REFERENCE

4.3.1 Objectives

The objectives of this study were to provide a technical and economic assessment of the feasibility of using solar energy to dry and preserve agricultural products. The technology addressed includes sun drying on conventional barbeques, sun drying in transparent buildings (with and without the assistance of fans and external flat plate collectors) and the solar heating of air with flat plate collectors for drying agricultural products or for supplementing fossil fuels that run commercial dryers.

The original Terms of Reference on Solar Energy Agricultural Applications (Sub-tasks 1-5 of Task 3) are listed in Appendix A. The products for consideration, as listed in the Terms of Reference, were redefined to add tumeric and cassava since a great deal of energy is required to dry both products. Because little or no imported energy is used to dry pimento, hay and bananas, these products were not addressed. Also, peas and beans were added to commercial drying since these foods are often purchased with too high a moisture content for safe storage. The drying of products with solar energy therefore included the following:

(1) Drying of agricultural products on the farm with particular attention to corn, peanuts and peppers;

(2) Crop drying on a commercial scale with particular attention to corn, peas, beans, onions, coffee, cocoa, tumeric, cassava and timber; and

(3) Fish drying on a commercial scale.

In addition to the tasks contained in the original Terms of Reference, the Energy Team members were also responsible for completing the requirements outlined in the Project Management and Detailed Study Plan discussed in Chapter 1. The team members were to conduct three assessment reviews to ensure that timely progress checks and necessary study plan alterations were made. The team members were also requested to make two presentations. The first was a seminar planned midway through the assessment; the second was at study completion at which time the results, conclusions and recommendations were highlighted at the Final Report Conference, held November 13-14, 1979.

As a result of the project summary given during the first day of the conference, a number of questions were asked to clarify study procedures, options, constraints, and considerations made when formulating specific recommendations. The questions were fielded by the team experts and Jamaican counterparts during splinter group discussions held the second day. The tapes of this Solar Agricultural splinter group's question and answer session were transcribed and are contained in Appendix J.

4.3.2 Schedule

The Solar Agricultural Study was initiated on October 8, 1979 and concluded on November 16, 1979.

4.4 BACKGROUND INFORMATION

4.4.1 Solar Energy Use In Drying Agricultural Products

In many of the solar applications in agriculture, direct use of solar energy already plays an important role. Nevertheless, a significant amount of fossil fuel presently goes into the low temperature heating and drying operations just because of the traditional convenience and dependability of fuel-fired operations. With increasing costs and unavailability of various fossil fuels, the need to focus on energy conservation for agricultural applications becomes important. When preservation of food and agricultural products is jointly considered with energy conservation, then the need to examine alternative methods of crop drying by solar energy becomes an economic necessity.

4.4.2 Types of Collectors for Crop Drying

In drying crops with solar energy, it is important to remember several notable characteristics. First, solar energy is diffuse and large collector areas are generally required. Unlike domestic solar water heating systems where solar collector areas are small, collector areas required for agricultural drying range in size from 400 ft^2 to 20,000 ft^2 or more. Therefore, cost becomes a significant factor. Also, while liquid solar collectors are more appropriate for water heating, air type solar collectors are generally more suitable to crop drying applications. A feature of air-type solar collectors for agricultural drying is that they can, because of design simplicity, be constructed more cheaply and be assembled at the construction site. There are three basic air-type solar collectors (referred to as "solar air heaters" in this report). Figure 4-1 illustrates the three types. The dashed line represents one or more transparent covers. Type I utilizes flow over the absorber. Type II utilizes flow on both sides of the absorber and Type III, flow under the absorber. Such collectors must be carefully designed and sized to obtain maximum heat transfer characteristics. In fact, the heat transfer characteristics are more critical for solar air heaters than liquid collectors.

4.4.3 Status of Air-Collector Development

Technically, the design and development of solar air heaters are in their infancy. Much is yet to be learned about their performance, characteristics, heat transfer, and the longevity of materials used with a wide range of

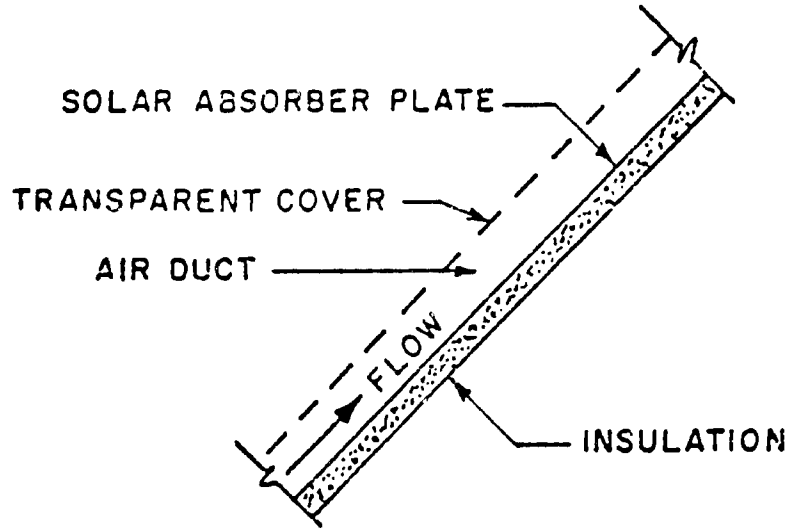

TYPE I, FLOW OVER ABSORBER

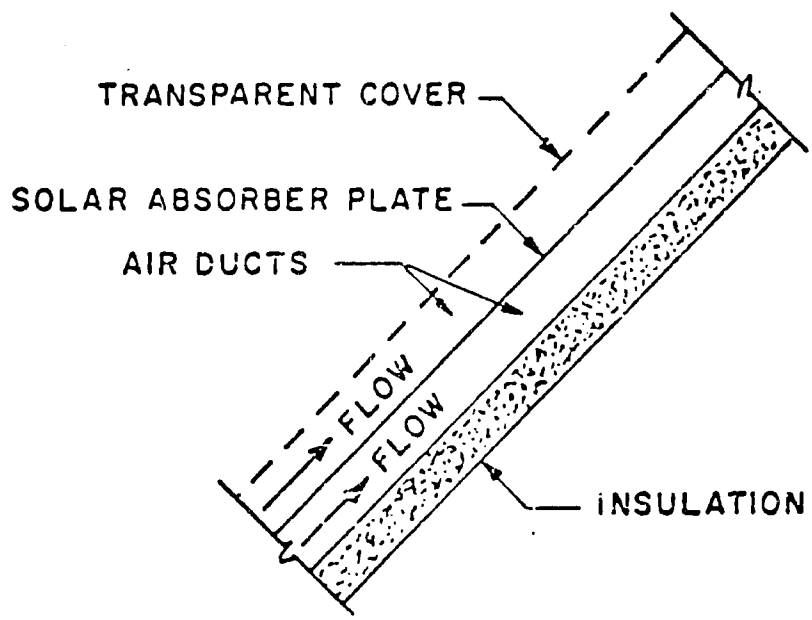

TYPE II, FLOW BOTH SIDES OF ABSORBER

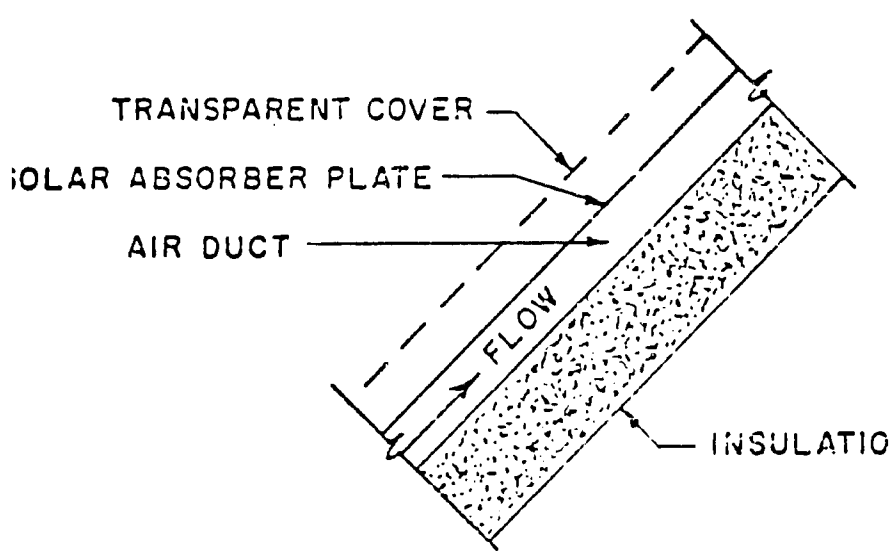

TYPE III, FLOW UNDER ABSORBER

Figure 4-1 AIR - TYPE COLLECTORS

temperatures and humidities. At this stage of development it is possible to design solar air heaters which will perform within approximately 10 percent of the predicted performance, provided solar radiation data and weather conditions are specified. It is also possible to predict, probably within 10 percent, the average energy which can be collected with a solar air heater of a particular design provided the average solar radiation and weather conditions are known. The design of liquid type collectors is better understood and they generally require fewer calculations. The challenge is to combine the weather data in Jamaica to predict the energies available, and to apply the timing of solar energy availability to the task of drying agricultural products.

4.4.4 Methods of Solar Drying

There are a number of applications in which solar energy can be applied for use in crop drying. Each application has its own peculiar characteristics, advantages and disadvantages, and they must be understood when trying to achieve cost effective drying results. The features of various solar energy drying techniques are outlined below.

4.4.4.1 Sun Drying by the Barbeque Method

This method involves the drying of agricultural products on an open surface exposed to direct sunlight. The features of this method are:

- -- Most energy efficient method; little use of energy;
- -- Optimum method for initial drying of products down to 20% moisture content (M.C.);
- -- Requires a long time and large areas for drying to preservation ranges of 10-15% moisture content; and
- -- Exposed drying surfaces susceptible to unexpected rain or showers.

4.4.4.2 Sun Drying in Transparent Buildings

This method involves enclosing the ceiling and walls of a drying chamber with a transparent cover. Free or forced convection is used to direct the air inside the building to dry products spread out inside the building. The main features of this method are:

- -- Products protected from rains and showers;
- -- Requires drying of larger quantities to justify use;

- -- Rate of drying and energy efficiency are reduced as compared to the barbeque method, probably due to reduced air flow rate and solar heat;
- -- Improved drying should be achieved by blowing hot air down through products.

4.4.4.3 Solar-Heated Forced-Air Drying

This method involves the use of a fan to force solar heated air through a bin of the product being dried. The features of this method are:

- -- Highly effective for drying products to low moisture content;
- -- Promotes crop preservation for use between harvests;
- -- Simple low cost technology;
- -- Improved drying performance as compared to sun drying;
- -- Nominal to insignificant use of electric energy for fans.

4.4.4.4 Preheating of Air for Commercial Dryers

This method involves the use of solar air heaters to preheat air which is then ducted to rotary drum, cyclone, vertical or tunnel dryers for drying products in large quantities at commercial drying facilities. The features of this method are:

- -- Collectors can be mounted on new or existing roofs;
- -- Simple low c st collector technology;
- -- Requires large roof or other area for collectors;
- -- Absorbers may be mass produced andassembled during roof construction;
- -- Collector design may be adaptable for use in liquid collectors also.

4.4.5 Potential Application of Solar Drying in Jamaica

In Jamaica the agricultural sector plays a major role in the country's economy. Crop drying by solar technologies, if proven to be cost effective, can help to: minimize food spoilage in most environments; preserve agricultural products for non-harvest seasons; and reduce consumption of fossil fuels. Any improvement in any of these areas will help to alleviate the foreign exchange problems of Jamaica. In measuring the effectiveness of solar energy for drying of agricultural products, it is important to quantify the benefits, not only in terms of equivalent barrels of fuel oil saved, but in the amount of

food preservation achieved. Food preservation can have major significance and greatly impact the supply and demand balance of food products.

Jamaica's agricultural performance has deteriorated in recent years by an estimated 30 percent between 1966 and 1975. Production has not kept up with demand; consequently, food imports as a percentage of consumption rose from 16 percent in 1950 to an estimated average of 26 percent in 1974-1975. Studies of the agricultural sector show that this sector has the best possibilities for expanding the national output in the coming years. It is therefore timely and important to assess the potential use of solar energy as a positive contribution to this sector's near-term growth.

4.5 STUDY METHOD

4.5.1 Personnel Interviewed

Many individuals from the government, academic and private sectors were interviewed to determine available solar equipment types, related costs, potential solar applications and existing solar programs. For details of the interview discussions, refer to Appendix B.

4.5.2 Sites Visited

A number of sites were visited to observe various agricultural drying operations. These visits permitted the Energy Team member to obtain first-hand information on current drying techniques, and to explore the feasibility of applying solar drying systems to enhance food preservation and reduce fossil fuel consumption. The specific sites visited were:

(1) DaCosta Brothers Plant, Grace Kennedy Company (solar hot air dryer)

(2) Cassava Drying Plant at Goshen

(3) Appliance Traders (collector materials)

(4) Hanover Spices in Lucea (tumeric drying)

(5) Jamaica Frozen Foods (fish-tunnel dryers)

(6) National Institute of Crafts (lumber drying)

(7) Coffee Industry Board Plant (rotary drum and vertical dryers)

(8) Cocoa Industry Board (rotary drum dryers)

4.5.3 Baseline Engineering Designs

In order to evaluate the potential use of solar energy for current drying processes, it was necessary to adopt several baseline engineering designs for use in the assessment. These baseline engineering designs were based on U.S. research and development of agricultural product drying and on the author's design and experience with solar air heaters. The baseline designs utilized in the assessment are as follows:

(1) Solar Grain Dryer
A two ton capacity bin-type dryer for the commercial drying of corn, peas, beans, peanuts and onions using a solar air heater.

(2) Air Preheater for Commercial Dryers
An air-type solar collector to preheat air for commercial dryers for coffee, cocoa, brewer's grain, tumeric and cassava.

For the design of collectors, a TI-59 calculator, programmed for the three basic types of solar air heaters shown in Figure 4-1, was used. Based on past experience and information gained in Jamaica, the collector with flow on both sides of the absorber was selected as the design model. The resulting air-type collector designs have flow rates ranging from 1/2 cu ft per minute (cfm) to approximately 2.5 cfm per square foot of collector surface. The rates are determined by the flow rate and temperature requirements of the specific applications analyzed.

Additional details concerning the baseline designs are provided in Section 4.7.8, page 4-24.

4.5.4 Other Studies

An energy analysis was made for the tumeric drying plant at Lucea, in Hanover. The results of these studies are discussed in Section 4.7.5, page 4-22.

4.5.5 Pertinent Data Utilized and Reviewed

The mean solar radiation in Jamaica used for the design calculation was obtained from the Jamaican Meteorological Service (References 1,2,3). Solar kilns and solar dryers for agricultural uses were reviewed in order to determine which types were suitable for Jamaica (References 4,5). Because of the lack of solar radiation data, a set of tables were calculated showing sun angles and Jamaica's latitude (Reference 6). The reference tables, computer program and print out were left with the Ministry of Mining and Natural Resources for future use in detailed design analysis.

The Ministry of Agriculture, Collection and Statistics Section, provided information on crop productions and prices (Reference 7).

4.6 FINDINGS

4.6.1 Availability of Solar Radiation Data

Accurate island-wide solar radiation data do not exist. Solar radiation data from the Gunn-Bellani instrument with questionable accuracy are available at six stations in Jamaica. A thirty month record of solar radiation measured with a pyranometer is available for Kingston.

4.6.2 Solar Air Heater Development

The efforts of this study have not found any current use of solar air heaters in Jamaica. Only two attempts to construct solar air heaters have been identified to date. There apparently is no design or development work in progress.

4.6.3 Energy Use for Drying Agricultural Products

The estimated energy use for all of the plants included in this study is equivalent to 25,000 barrels of diesel fuel per year. If the projects recommended by this study are completely implemented, the estimated fuel saving is 2,900 barrels of diesel fuel per year.

To maximize product quality, a research and development project is needed to study drying methods in order to establish the best configuration for product exposure to the heated air and to determine optimum drying rates and temperatures. This R&D effort should include a literature study, visits to other countries, engineering design, economic analysis, construction and operation of prototypes and laboratory-scale drying experimentation.

4.6.4 Sun Drying of Agricultural Products

Sun drying of agricultural products in small quantities by farmers and by housewives is widely practiced and evidently very successful, except for the difficulties experienced when showers unexpectedly occur. The study found that sun drying of small quantities of high moisture products to a medium or low moisture content was efficient. Initial or surface drying of wet coffee and cocoa in the sun is well developed and energy efficient. Sun drying of both large and small quantities of agricultural products should be encouraged.

A thorough study of small (100 to 500 lbs/batch) drying systems should be made using an engineering/economic approach as part of a research and development project to maximize the use of sun drying in Jamaica.

4.6.5 Solar-Heated Air Drying

Solar-heated forced-air drying of agricultural products needs to be developed in Jamaica. Whenever sufficient quantities of legumes or grains are assembled, solar-heated air dryers should be considered to ensure preservation.

Designs of several 140°-170°F solar air heaters examined in this study are highly efficient.

4.6.6 Solar Preheating of Air for Commercial Dryers

The site visits to commercial plants for drying coffee, cocoa, brewer's grain, cassava, tumeric and lumber (mostly associated with larger buildings) led to the finding that solar collectors mounted on existing roofs might economically provide a part of the drying heat, and at the same time decrease the quantity of imported fossil fuels normally used by these plants for drying operations.

4.6.7 Fish Drying

Fish is dried at 85°-90°F and therefore utilizes relatively little heat energy. The lower drying temperatures might be accomplished by using a chemical dehumidifier for the drying process and then regenerating the chemical with solar heat.

4.7 DISCUSSION OF FINDINGS

4.7.1 Solar Radiation Data

Since solar radiation recorded by a pyranometer is only available from the Palisadoes station, a method for computation was used to estimate solar radiation on a horizontal surface for seven stations in Jamaica (see Appendix C). The computed data for the Palisadoes station was compared with the solar radiation measured for a 30 month period. There is only a 4 percent mean percentage difference in the values. Therefore, the computed data should be usable for the other six locations in the country, keeping in mind that they are short-term records. Thus, this data should be usable for designs that have a back-up heating system, or on heating applications where no serious consequences result if less than design performance is achieved.

Even though some solar radiation data is available, reliable data have been recorded for less than three years. A long-term record of solar radiation and other climatic variables is needed to improve the predictability of solar heating designs.

From observation of the weather pattern in Kingston, the higher elevations to the north of the city apparently receive much less sunshine. Therefore, transportation of agricultural products from this area to locations with more solar radiation for improved drying, either in the sun or by solar heaters, might be worthwhile. Apparently, the coffee grown in the Blue Mountains is already transported to Kingston either for the purpose of assembling it for a centralized commercial operation, and/or to take advantage of the greater amount of solar radiation available for drying.

4.7.2 Solar Air Heaters

The design, development and manufacture of air-type solar heaters have lagged behind the development of liquid collectors. The box collector (manufactured as a component in the United States) for constructing air-type solar heating systems does not appear to have applicability in Jamaica, except perhaps on a very small scale. For commercial drying of agricultural products, there is a need to develop a "solar absorber-heat exchanger" which could be manufactured in a factory and shipped to the site for assembly as an integral part of the roof structure. Such units should be usable on top of existing roofs. However,

the cost would be less if the collector could be constructed as the building roof is assembled. One suggested design for an air-type solar collector assembled as an integral part of the roof is shown in Appendix D.

In constructing commercial-sized liquid solar collectors, the technique of manufacturing an "absorber-heat exchanger" without frames for insertion into a roof with an overall frame might also have merit, since it would eliminate much of the standard framework around each individual collector assembly.

All solar collectors generally require a transparent cover or glazing (with the exception of swimming pool heaters) to reduce heat loss from the collector absorber surface. Fiberglass is widely used as a cover material. Yet, it is known that fiberglass can become opaque if exposed to high temperatures over an extended period of time. Evidently, humidity also has an influence on many of the plastics. Collectors which are built as an integral part of the roof can utilize a corrugated fiberglass sheet provided it does not deteriorate too rapidly. In the United States, a greenhouse grade of tedlar-coated fiberglass is guaranteed by the manufacturer for twenty years. However, manufacturers will not guarantee this product when used as a solar collector cover in the United States. In Jamaica, it is more likely that fiberglass can become opaque in a relatively short period of time if the collector is subjected to stagnation temperatures. Experience has shown that practically all collectors are exposed to stagnation at one time or another. There is an urgent need to know more about the longevity of solar collector material when subjected to the Jamaican climate. Further, there is an immediate need to develop collector design and construction technology for both air-type and liquid-type solar collectors. The development of this technology in Jamaica could put the country's industry into an advantageous position for construction and export as well as domestic use of solar collectors, particularly if an efficient manufacturing method is used for the absorber-heat exchanger component and the construction technique is mastered. A system somewhat like that proposed in Appendix D has been constructed on a large number of farms in the United States. The development of solar collectors for Jamaica will require technical personnel who are well-trained in the techniques of collector design. These individuals must be allotted sufficient time to concentrate exclusively on solar heater collector design, application, utilization and development.

4.7.3 Energy Use for Drying Agricultural Products

The current energy use for drying coffee, cocoa, cassava, tumeric and brewer's grain is estimated to be equivalent to 25,000 barrels of oil per year. As a conservation measure, the operators of these facilities should be encouraged to use the maximum proportion possible of solar and open air drying techniques without jeopardizing product quality. The baseline engineering designs, utilizing air-type solar collectors as preheaters for existing commercial dryers, should save the equivalent of 2,900 barrels of diesel oil per year. The addition of thirteen two-ton capacity grain dryers would add only 3,000 kilowatt-hours (kWh) per year to Jamaican total electric load. This quantity is insignificant compared to the benefits derived by preventing spoilage of valuable food products and in extending product use beyond the harvest period.

4.7.4 Sun Drying of Agricultural Products

It appears that little can be done to improve the conventional open barbeque drying technique for coffee cocoa, tumeric and other agricultural products. The solar drying pamphlet (see Reference 4) reported an effort in Columbia to dry coffee under a transparent structure with polyethylene side walls and roof. The drying rate was actually decreased in the transparent building, apparently due to decreased air flow over the product. Another idea to improve air circulation is to utilize wind velocity to turn a rotary vane. Also to improve circulation, the height of the dryer could be increased with a stack so that the lighter weight, heated air inside would rise by convection. The difficulty with these approaches is that if the product is on the floor, then the incoming cooler air comes in contact with the product and therefore will tend to decrease the evaporation rate. It is expected that the cost per unit of any of the small structures for convective drying will be relatively high, since material used per volume is high. Finally, the concept of using a fan in a transparent building would appear to have merit from the standpoint that the warm air at the top of the layer, due to solar heating, could be moved downward through the product.

In analyzing any of these concepts, the maximum rate of drying cannot exceed the available energy. The rate of solar energy availability in Jamaica is approximately equivalent to evaporating 1.5 pounds of water per square foot on an average day and approximately 2 pounds per square foot of surface on a clear day. However, drying efficiency in

the transparent building in Columbia was only fifteen percent. Moving air over thin layers or through the entire product might aid the drying process, depending upon air humidity and temperature. It is estimated that for Kingston, the movement of one cubic foot per minute (cfm) of air through a product would have the equivalent energy for removing approximately one-tenth of a pound of water per day. So, it appears that most of the energy must come directly from the sun for direct solar drying, otherwise large quantities of air must be moved through the product.

Another possible solution for drying small quantities of agricultural products is to extend the surface of a transparent building by adding either fan-powered or thermosyphon types of flat plate solar collectors to the system. This study clearly shows that additional solar energy is available with fan-powered collectors (see grain drying example in Appendix E).

Dr. Oliver Headley, of the University of the West Indies in Trinidad, has conducted research to obtain drying information on thermosyphon air-type collectors with chambers for drying products in thin layers.

An engineering/economic study of alternative drying methods for 100 to 500 pound batches is needed to determine the drying cost per product unit for each system. The barbeque may be the best method for small batches. A literature search, visits to obtain information on drying rates with various systems and, if necessary, small systems testing should be used to obtain data for the engineering/economic study. This should be a part of the research and development program on the drying of agricultural products.

4.7.5 Solar Heated Air Drying

Since direct solar energy does not provide sufficient heat on the barbeques or within transparent buildings for drying large quantities of agricultural products, the method of utilizing solar air heaters over a much greater collection area can be used. In particular, the drying of grain and legumes which have previously been partially dried to approximately 20 percent moisture content, can be rather easily dried using solar air heaters. Solar collectors work particularly well in Jamaica since the ambient temperature is high enough that the abundant solar radiation can be efficiently collected.

For seasonally harvested crops, prices are usually higher between harvests. This price increase is partially due to the cost of product storage and maintenance of quality. If the supply between harvests is much less than the demand, the price rise may be quite drastic. One way to avoid the major price changes due to insufficient supply between harvests is to dry the product and protect it from insect infestation. Particularly the legumes and corn lend themselves to easy drying as a means of preservation.

A brief study of price and production data prepared by the Data Collection and Statistics Section of the Ministry of Agriculture could not conclusively determine that large price fluctuations were due to inadequate storage of legumes and corn between harvests. The data were available only as averaged quarterly for the last three years. Monthly prices are needed over a longer time period for accurate analysis. Mr. Cooke, Operations Manager for the Agricultural Marketing Corporation (AMC), is convinced that drying of legumes and corn is very much needed. He is often in the position of receiving grains and legumes which are partially dried, but not adequately dried for storage. He must, therefore, pass these products on to consumers in order to prevent spoilage. His data indicate that red peas would average as much as J. $0.45 per pound gain between harvests if adequately dried.

The phenomenon of high prices between harvest seasons is not unknown in other countries. Several years ago, the price of corn during the harvest in the United States corn belt averaged much less than the price eight or ten months later. As noted, a part of this price increase must exist in order that persons drying and storing the grain can afford the necessary facilities. However, farmers with large quantities of grain were losing millions of dollars until they began building their own drying and storage facilities. As a result, even medium sized grain farmers today in the United States have their own grain dryers and storage facilities. Apparently, purchasers of legumes and grains need dryers in Jamaica.

An effort was made to determine the number of farms in Jamaica which produced a sufficient quantity of legumes and corn to justify a dryer. The Data Collection and Statistics Section of the Ministry of Agriculture again provided their best estimates for use in this report. Thus, the following data is used as a general guide to the number of farms which produce over five tons of the following products:

Red peas	-	290 farms
Gungo peas	-	59 farms
Cow peas	-	61 farms
Peanuts	-	85 farms
Corn	-	549 farms

Some of these farms could surely profit by the use of a one or two ton capacity solar grain dryer. Farmers who grow their own products for consumption at home could arrange for drying on a community basis. Appendix E has an example of a solar dryer which is suitable for drying corn, peas, beans, peanuts and probably curing onions, provided management or automatic controls are available to adjust the temperature. According to the computations, the dryer is not only economical but would provide the previously discussed feature of preserving the crop for consumption between harvests.

An analysis was made of the tumeric drying process at the Hanover plant. Mr. Rhodes, the plant manager, indicated that LP gas usage in 1978 was approximately 22,200 U.S. gallons. This fuel was used to dry 1,000 tons of raw tumeric which yielded 138 tons of dry tumeric. The results of the analysis show that about half of the energy is lost by daily heating of the concrete drying tunnel and by heat losses through the tunnel. The analysis concludes that heat loss could be lowered by adding insulation inside the tunnel and in the fan duct over the tunnel. More importantly, the analysis concludes that a detailed study needs to be made to determine more efficient methods of drying tumeric so as to conserve energy, enhance product quality and improve resource utilization. The energy analysis of tumeric drying is contained in Appendix H.

The need for drying is estimated for approximately 25 percent of production, or 4,000 tons of the legumes and corn. Even if these products have been dried, some of them will absorb moisture from the atmosphere if high humidity prevails. For instance, at 77°F red peas have an equilibrium moisture content of 15 percent to 70 percent relative humidity and 18.6 percent at 80 percent relative humidity. These data are typical for peas and beans. The most desirable storage moisture content is 12 percent which requires a 60 percent relative humidity. Some degradation is expected at 15 percent moisture content and molds are sure to form at 18 percent moisture content, particularly at Jamaica's high temperatures. Unless some other environmental factor has not been

considered, stored peas and beans should be dried and protected from high humidity and insects. Drying 4,000 tons in the market channels (presently, 500 tons are received by the AMC and Mr. Cooke indicated that he could easily purchase 1,000 tons) would require 24 of the two-ton capacity solar-heated dryers suggested in Appendix E. In the recommended program, 14 solar-heated dryers are suggested for construction during the next five years. For the long-term 40 dryers of this type would probably be utilized.

4.7.6 Solar Preheating of Air for Commercial Dryers

The analysis of this problem shows that all of the available roof area at the plants visited could be used for solar air heaters to preheat air for commercial drying of coffee, cocoa, tumeric, cassava and brewer's grains. Specific designs must be developed to provide collectors capable of supplying the energy required to dry each of the different products.

By extending the baseline designs presented in Appendix E, F, and G to the other drying operations, the total usable heat which could be collected with solar air heaters during the drying process is 11 x 10^9 Btu. This energy would replace 2,900 barrels of Number 2 diesel oil.

The baseline engineering designs show that solar preheating of air for commercial dryers is both economically and technically feasible.

4.7.7 Fish Drying

The air drying of fish does not lend itself well to solar air drying, (except for heat storage) because most of the heat energy is used at night during the months of October through March. However, there is some question as to whether a dehumidifying system, which utilizes solar heat for regenerating the chemical dehydrating agent, might be feasible, both from an energy standpoint and from the achievement of lower drying temperatures.

There is also some question as to whether the 25 horsepower fans used for each of the tunnels is necessary, the answer to which should be found either in the literature and/or by laboratory research. Utilization of such information should lead to a more efficient system and a better product.

4.7.8 Baseline Designs of Solar Collectors for Agricultural Applications

In order to evaluate the possible economic impact and overall feasibility of solar energy, various applications suitable to current drying processes were analyzed. To assist in this analysis, several baseline engineering designs were used to develop representative systems cost and pay back figures.

4.7.8.1 Basis for Design

Accurate solar radiation data is needed to achieve efficient and practical solar dryer designs. During this study, however, it was found that accurate solar radiation data (measured by a pyranometer) were available for only one location, the Norman Manley Airport in Kingston. The climatic data needed for computing approximate solar radiation for the airport and six other stations in Jamaica were obtained from the Meteorological Office in Kingston. The computed data were then compared to the pyranometer data obtained at the airport and a mean difference on daily average readings was about 4 percent. For calculations made in the baseline engineering designs, 1,700 Btu per square foot per day was used as the average solar radiation. This level can always be obtained if the collector's roof is correctly oriented and sloped, which is the case for some existing buildings.

For the number of years to pay back for each baseline design, the interest rate was assumed to be 10 percent per annum. The following equation was used to provide a first approximation. The results of this equation should only be used as a guide to determine which of the considered installations merits first consideration for a detailed design and analysis.

$$Y = \frac{Sc}{Afs - (0.02\ Sc)}$$

Where:
- Y is the number of years to pay back
- Afs is the annual fuel savings
- Sc is system cost

In this equation, 2 percent of the initial cost is assumed as the maintenance and operations cost for air-type solar collectors. For liquid-type collectors, only 1 percent is assumed. The additional 1 percent is used in this equation in order to completely cover the additional expense for operating a fan instead of a water pump.

4.7.8.2 Baseline Engineering Designs

The following baseline engineering designs were analyzed. Calculations and design development comments are presented in the specifically referenced Appendices. These designs are based on construction of solar air heaters on existing roofs. Collectors constructed on new buildings will cost less.

(1) Solar Grain Dryer - This baseline design can be used for drying corn, peas, beans, peanuts and onions. Trained management is necessary for the operation of this dryer. Detailed calculations are contained in Appendix E, page 4-48.

Design criteria:

- require 480 cfm to produce 175°F air
- flow on both sides of absorber
- Vee-corrugated absorber and 1" of fiber insulation
- transmissivity - absorptivity product = 0.74
- Ta = 90°F (ambient temperature)
- I = 250 Btu/hr-ft^2 (solar radiation)

Determine best collector

- 2 covers, one dead air space
- 3 covers, two dead air spaces

(a) two covers

heat resistance U_t = 1.2 Btu/hr-ft^2 °F

flow rate = 1.4 cfm/sq ft

collector area = 480/1.4 ≐ 350 sq ft

(b) three covers

heat resistance U_t = 0.9 Btu/hr-ft^2 °F

flow rate = 1.5 cfm/sq ft

collector area = 320 sq ft

Design (a) was chosen (See Appendix E). After the discussions with AMC, the cost analysis was made for a 700 sq ft collector to dry two tons of grain to 20 percent M.C. (moisture content). The total collector cost was estimated to be U.S. $7.60/sq ft or U.S. $5,326, not including overhead or contractor's profit. The cost of this collector is based on construction on an existing roof; if built as an integral part of a newly constructed roof, the additional cost would be U.S. $4.80/sq ft including labor.

(2) Preheating of Air for Rotary Drum Dryers - This design can be used to dry coffee and cocoa. The same collector can be used with the vertical coffee dryers and air preheaters for cassava drying (see Appendix F, page 4-52).

Given:

- Dryer volume = 450 cu ft
- Flow rate = 10 cfm/cu ft
- Roof area = 130,000 sq ft
- Heat required = 36 U.S. gal/hr
- Solar radiation = 1,700 Btu/day-sq ft

two dryers over one-fourth of the building
collector area = 3360 sq ft

collector flow = 10 cfm/cu ft

total flow = 9000 cfm

Collector efficiency = 0.6 (from collector design)

Energy collected = 1700 x 3360 x 0.6
= 3.43×10^6 Btu/day

Annual (100 day) Energy Collected = 343×10^6 Btu/year

Fuel replaced = 3700 gal at U.S. $0.93/gal
= $3400/yr

Collector cost = U.S. $9.60/sq ft x 3360 sq ft
= U.S. $32,200

$$\text{Pay Back} = \frac{\text{System Cost}}{\text{annual saving - 2\% of system cost}}$$

$$= \frac{32{,}200}{3400-645}$$

= 11.6 years

(3) Solar Preheating of Air for Drying Brewer's Grain (Appendix G, page 4-54)

Given:

- Water removal/day = 78×10^3 lbs/day
- Roof area = 16,500 ft^2
- Solar radiation = 1700 Btu/ft^2-day

- Operation times = 250 days/year
- Flow rate at 0.5 cfm/ft^2
- Collector efficiency = 0.4 (from collector design)

Collector area is the same as roof area
= 16,500 ft^2

Energy from collector = 16,500 ft^2 x 1700 Btu/ft^2-day
x 250 days/yr x 0.40
= 2.8×10^9 Btu/yr

Heat required to remove water
78×10^3 lbs/day x 2000 Btu/lb x 250/days/yr
= 39×10^9 Btu/yr

Cost Analysis
Cost of system = 16,500 ft^2 x U.S. \$7.6/ft^2 x
(1.1 x 1.15 profit cost)
= U.S. \$ 158,600

Fuel replaced $= \dfrac{2.8 \times 10^9 \text{ Btu/yr}}{130{,}000 \text{ Btu/gal} \times 0.7}$

= 30,700 gal/yr

Cost of fuel = U.S. \$0.93/gal x 30,700 gal/yr
= U.S. \$28,600

Pay Back $= \dfrac{\$158{,}600}{\$28{,}600 - (0.02 \times 158{,}600)} = 6.2$ yr

4.8 CONCLUSIONS AND RECOMMENDATIONS

4.8.1 Present Solar Energy Program

The establishment of long-term weather records, including accurate solar radiation measurements at a number of locations, is found to be an important requirement, particularly for solar agricultural applications involving air-type collectors.

The development of air-type solar collectors suitable for use in tropical climates is necessary, and must be accomplished so that solar-heated, forced-air type dryers can be used in the near-term.

The energy use in drying agricultural products can amount to significant savings of imported energy if solar-heated air drying is used (see Table 4-2). A research and development program is needed for determining the best methods for presenting the product to heated air, the rates of drying, and the methods useful for obtaining the maximum quality.

The drying of agricultural products on open concrete pavement is well developed and little improvement is possible in this energy-efficient process. The solar energy available on a horizontal surface, however, is not sufficient for rapid drying to low moisture contents required for large quantities of products. Since the analysis of energy available on horizontal surfaces indicates that only slow drying is possible in transparent buildings, the methods of collecting solar energy from an area larger than the building should be investigated.

It is concluded that a program leading to the construction and use of air-type collectors mounted on existing roofs should be initiated.

Since the solar-heated, forced-air drying and air-type collectors are new technologies in Jamaica, the training of design engineers, installers and operators will be necessary.

4.8.2 Specific Recommendations

The following specific recommendations of this report are:

(1) Establish 10 climatic stations to record solar radiation levels and ambient temperatures.

(2) Begin immediate development of solar-heated air collectors for drying agricultural products in the tropics (see Appendix D). It is recommended that the materials testing part of the program begin immediately.

(3) Establish a research and development program to determine the most effective method of drying the various agricultural products by type of product (see Appendix I).

(4) Initiate R&D drying project for small quantity drying to determine which method (barbeque, transparent building, closed cabinet with external free convection collectors, etc.) will provide the least cost per unit of dried product.

(5) Encourage sun drying of agricultural products, particularly those of high moisture content; conduct research and development to determine most cost effective drying methods.

(6) Design and construct solar collector systems for use as preheaters in existing roofs of commercial drying facilities (see Appendix D).

(7) Provide the necessary training for the research, development, design, construction and operation of solar air heaters and forced-air dryers for the climate of Jamaica.

(8) Begin program to develop and construct solar-heated air drying systems for community use when sufficient quantities of products are ready for drying from one or more farms.

4.8.3 Recommended Programs

The recommended program includes the following elements:

(1) Establishment of climatic stations;

(2) Development of air-type solar collectors;

(3) Research and development on drying of agricultural products;

(4) Sun drying of agricultural products, and research and development on cost effective drying methods;

(5) Construction of solar-heated, forced-air dryers for agricultural products; and

(6) Construction of supplemental solar heaters for use as preheaters at commercial drying facilities.

The air-type collector development is to include both "forced-air" and "thermosyphon" air-type collectors. The research and development program on product drying is to include free convective type dryers as well as forced-air dryers.

The recommended program schedule and associated cost are shown in Table 4-1. This program includes the R&D, development and design of solar air heaters, and construction of various projects. The first year's program consists of collector development, product drying R&D and the construction of the first two-ton capacity grain dryer; the rest of the recommended program is allocated over the remaining four year period.

The data used to illustrate the technical and economic feasibility of solar-heated air dryers for specific use is shown in Table 4-2. The results show that solar energy would provide essentially all of the necessary heat for the small grain dryers as well as supplement fossil fuel for the commercial dryers. An exception might be the tumeric dryer and the lumber kiln. In these two cases, the R&D program and engineering development should be utilized to assess the best method of drying various products before proceeding to production design. The lumber dryer was eliminated from the program because of the long pay back period.

The need for establishing solar-heated grain dryers is great enough that one such dryer is to be built as a part of the development program. After it is checked for performance and after smaller collector units have been instrumented and tested, larger unit design should proceed in the second year of the program.

It is believed that the costs assumed for collector construction are reasonable for contract work. In the detailed design, particularly after sufficient development, lower cost materials might be selected to achieve cost reduction. As development and construction proceed and more experience is gained, it may be feasible to reconsider the development of a lumber dryer.

TABLE 4-1

RECOMMENDED PROGRAM SCHEDULE AND COSTS FOR
SOLAR-HEATED AIR DRYING
(US $)

PROJECT	1980	1981	1982	1983	1984
Climatic Data	See Solar Industrial and Commercial Report				
Collector Development	$120,000	$ 90,000	$ 90,000	$ 90,000	$ 50,000
Encourage Sun Drying	12,000	12,000	12,000	12,000	12,000
Product Drying R&D	120,000	90,000	75,000	60,000	50,000
Grain and Legume (2000)* Dryers	8,900	38,000	57,000	19,000	
Cassava		(16,000)	154,000		
Brewer's Grain			(16,000)	158,000	
Tumeric			(6,000)	58,000	
Coffee		(8,000)	33,000	100,000	100,000
Cocoa			(8,000)	30,000	130,000
TOTAL	$260,900	$254,000	$451,000	$527,000	$342,000

*Parentheses indicate initial design cost; planning for additional units is included with construction cost.

TABLE 4-2

DATA USED IN ASSESSMENT OF SOLAR-HEATED AIR DRYING

Project	Dryer Units	Total Collector Construction Area Sq. Ft.	Energy Production Btu Per Year	No 2 Diesel Equivalent US Gallons	Saving Per Year US Dollars	Payback Period In Years	Total Capital Thousands US Dollars
2 Ton Grain Dryer	13	9,100	0.8×10^9	8,840	8,224	1	125
Brewer's Grain Dryer	1	16,500	2.8×10^9	30,700	28,600	6.2	158
Coffee Dryers	14	24,000	2.45×10^9	26,900	25,000	11.6	230
Cocoa Dryers	10	18,000	1.84×10^9	20,190	18,780	11.3	173
Cassava Dryer	1	16,000	3.2×10^9	35,100	32,700	5.2	154
Tumeric Dryer	1	6,000	0.82×10^9	8,970	8,300	8.2	58
Lumber Dryer	1	8,000	0.68×10^9	7,470	6,950	19	98

4.8.3.1 Consumer and Economic Benefits

The development of food and agricultural product drying technology should benefit everyone in Jamaica by providing a better supply of food products throughout the year. A wide fluctuation in the price of a product is an indicator that more of that product should be preserved for use after the peak harvest season. The drying of products with solar energy, either directly in the sun or by using air from solar collectors, is a relatively simple technology in Jamaica. The collectors will operate at relatively high efficiency due to high temperatures during the day and high solar radiation, particularly near the coast. Maximum use should be made of these factors.

Supplemental heat supplied by solar air heaters in commercial applications should benefit Jamaica through a decrease in foreign exchange expenditures, and by the use of a more economical system. Detailed engineering design based on solar air heater performance in Jamaica should provide improved projection of the economic benefits for each system before construction.

4.9 REFERENCES

(1) The Climate of Jamaica, Climatological Branch of the Jamaican Meteorological Service, 1973.

(2) Weather Report 1967-70, Ministry of Public Utilities, Communications and Transport, Meteorological Division, Jamaica.

(3) Data on solar radiation, mean sunshine hours, number of rain days and mean relative humidity. Obtained from the Meteorological Service of Jamaica.

(4) A Survey of Solar Agricultural Dryers, Brace Research Institute, McGill University, Quebec, Canada, Technical Report T99, December 1975.

(5) Tschernitz, J.L. and Simpson, W.T., Solar Kilns - Feasibility of Utilizing Solar Energy for Drying Lumber in Developing Countries, U.S. Department of Agriculture, Forest Service. Prepared for the U.S. Department of State, Agency for International Development, January, 1977.

(6) Reddy, S.J., An Empirical Method for the Estimation of Total Solar Radiation, Solar Energy, Volume 13, pp. 289-290, 1971.

(7) Production and Acreage of Crops in Jamaica for 1977 and 1978, Mimeographed report of compiled data, Data Collection and Statistics Section, Ministry of Agriculture.

Computer print-out of Solar Radiation on Sloping Surfaces for Jamaica, prepared by B.F. Parker. Available at the Energy Division of the Ministry of Mining and Natural Resources, Jamaica.

Energy Production in Jamaica, Workshop on Science and Technology, Jamaica, 1978.

George, K., Krieder, J.F., and Nunez, A., Design, Construction and Installation Manual Solar Water Heating Systems In Jamaica and the West Indies, Ministry of Mining and Natural Resources, 1977.

Kentucky Solar Energy Handbook, College of Engineering, Continuing Education Office, University of Kentucky, 1979.

Loewer, O.J., Grain Drying Performance Evaluation, AEES-7, Department of Agricultural Engineering, University of Kentucky, 1978.

Parker, B.F., Air-Type Solar Collectors for Agricultural and Residential Use, unpublished.

Parker, B.F., Derivation of Efficiency and Loss Factors for Solar Air Heaters, Proceedings of the American Section of the International Solar Energy Society, Atlanta, Georgia, June 1979.

The Small Farmer in Jamaican Agriculture: An Assessment of Constraints and Opportunities, U.S. Department of Agriculture, November 1978.

4.10 APPENDICES

APPENDIX A - Terms of Reference

The study shall include a technical and economic assessment of the feasibility of near-term application of solar energy with a primary focus on food processing and storage. The study shall examine the potential for solar crop drying, both on the scale of small individual farmers and on the scale of bulk marketing, food processing and storage. In addition the study shall assess the feasibility of commercial solar air-conditioning and of solar industrial applications. The assessment will include examinations of the following:

1.* Corn drying at regional drying centers to be operated by the Agricultural Marketing Corp.

2.* Drying of agricultural products at the farm level including peppers, onions, corn, peanuts and hay.

3.* Drying of pimento, coffee, cocoa, bananas and timber on a commercial scale.

4.* Crop drying on a commercial scale (approximately 1 ton/day).

5.* Fish drying on a commercial scale.

6. Solar cooling for food storage in accordance with requirements to be specified by the Agricultural Marketing Corp.

7. The technical and economic feasibility of solar air conditioning for a new extension to a government office building and for a regional hospital.

8. The general feasibility of solar air conditioning in Jamaica.

9. The feasibility of commercial and industrial applications of solar energy, in particular industrial process heat and hotel hot water in the tourist industry, to substitute for imported petroleum.

*Applicable to the study reported in Chapter 4.

APPENDIX B - Personnel Interviewed

(1) Mr. W. R. Ashby - Ministry of Mining & Natural Resources: Mr. Ashby was very helpful in identifying personnel who should be interviewed and sites which should be investigated. He and Mr. P. Dowding participated in many of the site visits and assisted in the development of this report. As the visits were made, additional suggestions were obtained on sources of information as well as sites and personnel to be visited. The following interviews were particularly helpful in evaluating the current energy use patterns, the present drying of agricultural products and the potential for utilizing solar energy to reduce fossil fuel use and better preserve Jamaica's food supply.

(2) Miss Ina Pyne - Meteorological Office, Hagley Park Plaza: Miss Pyne provided the data on solar radiation measurements obtained with a pyranometer at Palisadoes. She also provided the climatic data for six other locations.

(3) Mr. Larry McDonald - Appliance Traders: Mr. McDonald provided considerable information on the cost of materials and on the local construction of liquid-type collectors. He also made many valuable suggestions concerning the study on solar drying of agricultural products.

(4) Mr. Howell and Mr. Young - Jamaica Industrial Development Corporation: Provided information on tumeric drying at Hanover, spices in Lucea and on the interest of The Jamaica Manufacturers Association concerning the subject study.

(5) Mr. David Cooke - Agricultural Marketing Corporation: Mr. Cooke indicated a need for additional drying of peas, beans, peanuts and corn as a means of preserving these products which are usually purchased in bags but may not be sufficiently dry for storage. He expressed the need for drying approximately one ton per day at several receiving locations of the AMC.

(6) Mr. Joe Suah - Crops Research, Ministry of Agriculture: Mr. Suah expressed the need for more extensive drying because of Jamaica's humid climate. However, the drying of small quantities of peppers, onions, pimento and other agricultural products on the barbeque in the sun is quite successful provided there is protection from tropical showers. Methods to protect against damage from showers would be helpful. Mr. Suah also suggested other persons who might provide additional information.

(7) Mr. D. Henry - Director of Extension, Ministry of Agriculture: Mr. Henry discussed the drying and preservation of spices, particularly ginger and tumeric. He suggested specialists to contact for information on pimento, timber, peanuts, corn and tubers.

(8) Dr. Chambers - Agricultural Extension, Ministry of Agriculture: Dr. Chambers mentioned that ginger is harvested at approximately 80 percent moisture content and is safe for storage at 10 percent moisture content. He also indicated that many Jamaican farmers dry their crops in small batches on a barbeque.

(9) Dr. K.C. Lee and Mr. Oxford - Scientific Research Council: Dr. Lee discussed in detail the drying of tumeric at Lucea in Hanover. He suggested the need to explore methods of using solar heat to replace the current use of butane.

(10) Mr. Rhodes - Manager, Tumeric Plant at Lucea: Mr. Rhodes indicated that the LP gas usage for last year was 18,501 imperial gallons (22,000 U.S. gallons). This fuel was used to dry 1,000 tons of raw tumeric which yielded 138 tons of dry tumeric. Notes were taken on the details of the drying system; it consists of a concrete tunnel into which trolleys were rolled. Each trolley contains 22 trays of tumeric.

(11) Mr. Romney - Coconut Industry Board: Mr. Romney pointed out that coconut is successfully dried from approximately 50 percent to 7 percent moisture content, using the coconut shells as fuel. Some of the extra shells are made into charcoal.

(12) Mr. Roy Rainford - Extension Specialist, Ministry of Agriculture: Mr. Rainford discussed the drying and preservation of tubers, including cassava, yams and sweet

potatoes. He made reference to and discussed the new large plant at Goshen which dries cassava from 70 percent to approximately 5 percent moisture content.

(13) Cassava Drying Plant at Goshen - The subject of crop drying was discussed with plant operating personnel; the manager was not available. The plant utilizes six cyclone dryers. Bunker C fuel oil is used. The boiler is rated at 456 kilograms per hour and the drying temperature is 65°-70°C. Nine tons of wet cassava are dried per hour to yield 5 1/2 tons of cassava flour. The roof area beside the dryer has approximately 16,000 square feet and has potential as a mounting surface for air heating solar collectors.

(14) Mr. Tony Barnes, Mr. Keith Jones and Mrs. Douglas DaCosta Brothers Plant, Grace Kennedy and Company: A discussion was held concerning the drying of chili peppers and vegetables utilizing a solar air-heater to provide hot air for a small heated chamber. The collector reached 190°F but the maximum chamber temperature was 130°F. The difference in temperature was apparently caused by air leaks around a slide gate. This research unit has been used for drying chili peppers. They indicated that higher temperatures were needed. Also discussed was a small transparent building which had been constructed by Appliance Traders Company for possible use in drying agricultural products. Mr. Barnes expressed continued interest in the drying of agricultural products using solar energy and indicated this company would be interested in cooperating on future tests.

(15) Mr. Keith Walters - Engineer, Jamaica Frozen Foods: Mr. Walters discussed the drying of fish and conducted a plant tour to view the tunnel dryers used for that purpose. The fish are currently dried at approximately 85°F. Most of the heating is done at night from October through March. The fish are dried from approximately 60 percent moisture content to 40 percent moisture content.

(16) Dr. Patterson and Mr. Tom Bennett - United States Agency for International Development: Discussed the possibility of drying small quantities of fish caught from fish ponds. Also mentioned was a possible marketing project which would involve four terminal markets. At another meeting with Mr. Bennett there was a discussion

of the need for drying at receiving and packing stations for the terminal markets. He estimated that ten dryers of two-ton capacity might be needed.

(17) Mr. DeLisser - Cocoa Industry Board: Mr. Delisser discussed the processing and drying of cocoa beans as well as the critical nature of cocoa drying. Later, the second stage of cocoa bean drying, utilizing rotary drum dryers, was observed. This process is similar to the drying approach used by the coffee industry.

(18) Mr. D. Evans and Mr. E. Daniels - Coffee Industry Board: A tour was conducted in a coffee drying plant to examine existing procedures used in drying coffee. The equipment included large barbeques, eight rotary drum dryers and six vertical dryers. The general procedure is to dry the surface moisture from the coffee on the barbeque and then to place the coffee in the dryers. The roof area of the buildings containing the dryers was recorded to determine if there was sufficient area to mount solar collectors.

(19) Dr. Kenneth Walker - Storage and Infestation Division, Ministry of Industry and Commerce: Dr. Walker provided information on the equilibrium moisture content of several Jamaican crops.

(20) Mr. Garnum and Mr. Fisher - Forest Industries Development Company: These gentlemen indicated that air drying underneath a roof was quite satisfactory for drying conifer construction lumber, at least in the coastal areas. The National Institute of Crafts operates the only lumber drying kiln on the island. The drying of hardwood, particularly for furniture, requires a lumber kiln.

(21) Mr. Bodden - Lumber Kiln Operator, National Institute of Crafts: Mr. Bodden discussed the kiln drying of lumber, the schedule of temperatures and time, and the large plant roof area which might be utilized for solar air heaters.

(22) Mr. John Gayle - Extension Specialist, Ministry of Agriculture: Mr. Gayle discussed that pimento becomes brittle at less than 12% moisture content. Only two farmers tried to use mechanical drying systems, most people use barbeque technique.

APPENDIX C - Computed Solar Radiation Data

Only one hemispherical pyranometer has been used to record solar radiation data in Jamaica. The data have been assembled as daily averages for each month for 30 months. In addition, five other stations have recorded estimated solar radiation based on the Gunn-Bellani instrument. It is believed that the latter data have a low accuracy. In considering the need for additional solar radiation data for Jamaica, the following mathematical relationship was secured from the literature (Reference 7) and used to predict the hemispherical daily average solar radiation for each month at the Palisadoes Station.

$$R_f = K\left[\frac{(1+0\cdot 8s)(1-0\cdot 2t)}{\sqrt{h}}\right] \text{cal/cm}^2\text{/day}$$

where $K = (\lambda N + \psi_{i,j} \cos\phi)\, 10^2$ cal/cm²/day, in which

ϕ = latitude of the place in deg.

$\lambda = 0\cdot 2/(1+0\cdot 1\phi)$ (the latitude factor).

N = mean length of the day during the month.

$\psi_{i,j}$ = seasonal factor (i = 1,2, in which 1 and 2 stand for inland and coastal stations, respectively, and j = 1,2 – 12, in which 1 and 2 stand for Jan. to Dec. respectively is given in Table 1.

$s = n/N$

n = mean hours of bright sunshine per day during a month.

$t = r/M$

(r = number of rainy days during the month and M = number of days in the month).

h = Mean humidity per day in the month.

The data computed by this equation had a mean difference from the daily average readings of the pyranometer of 4%. The maximum difference for any month by computed value was 13% for the 30 months of data available. After averaging the data for each month (i.e., the two or three monthly readings for the available years) the mean difference between computed and pyranometer data was 3% and the maximum, 8%. Apparently, the computed data are as usuable for designing solar heating systems as the short-term weather records. Table 4-3 provides the computed hemispherical solar radiation for seven stations on the island and the recorded data at Palisadoes.

TABLE 4-3

TOTAL SOLAR RADIATION ON A HORIZONTAL SURFACE

(computed by Peter Dowding, Engineer for Energy Division, Ministry of Mining and Natural Resources)

Method and Location		Jan.	Feb.	March	April	May	June	July	Aug.	Sept.	Oct.	Nov.	Dec.
Gunn-Bellani													
Palisadoes	(62)*	1954	2120	2106	2202	2250	2281	2241	2201	2026	1902	1840	1872
Pyranometer													
Palisadoes	(63)	1430	1597	1803	1901	1868	1925	1829	1762	1737	1609	1389	1366
Computed**													
Palisadoes	(30)	1497	1645	1786	1882	1825	1771	1831	1848	1685	1580	1446	1386
Sangster	(42)	1348	1548	1894	1854	1630	1670	1851	1806	1655	1597	1318	1355
Alcan	(38)	1188	1334	1451	1475	1618	1803	1958	1751	1771	1366	1185	1158
Smithfield	(41)	1082	1179	1352	1484	1458	1589	1789	1665	1571	1377	1200	1116
Bodles	(38)	1227	1288	1413	1584	1618	2021	2155	1955	1858	1456	1267	1210
Orange River	(45)	1004	1109	1300	1366	1509	1752	1881	1703	1635	1248	1029	1027
Worthy Park	(81)	1105	1167	1260	1368	1450	1567	1703	1569	1460	1183	1149	1039

*The number in parentheses represents the number of months of the weather period used for the calculations.

**See Reddy, S. J., An Empirical Method for the Estimation of Total Solar Radiation. Solar Energy, V. 13, pp 289-290. 1971.

APPENDIX D

Development of Solar Air Heaters

The development of solar-heated drying of agricultural products depends directly upon development of air-type solar collectors. The use of collectors of the type currently manufactured in Europe and the United States is not suitable to Jamaica's need for solar air heaters. In the first place, these collectors are manufactured on an assembly line basis in order to reduce the labor required in assembly. Secondly, they use an excessive amount of material which is secured at a premium in Jamaica. In particular, the material for framing each of the small collector modules is of little use once it is mounted on a roof since the roof provides a frame suitable for supporting a collector. Although it may take more labor to assemble collectors on the roof (it could be less labor, depending on the system), the availability of labor and the reduction in use of materials are considerations which must be weighed in developing a suitable collector construction technique for Jamaica. One possible alternative to the collector module concept is to manufacture the "solar absorber-heat exchanger" part of the collector and to assemble the collector as an integral part of the roof of a building or for existing buildings on top of the existing roof.

In any case, Jamaica needs to develop a design which can be constructed in the country. Creative design is needed to suit the climate and the temperature performance for specific tasks in Jamaica. One suggested design for consideration is shown in Figure 4-2. This design could be constructed on top of existing roofs or preferably as an integral part of the roof for new buildings. The cost of construction will be considerably less if the unit is built during the roof construction process.

During construction of a roof some type of purlin or sheathing is required for attaching the supporting roof. Therefore, the additional materials required would be film for a bottom air seal, the rigid insulation, the absorber plate and one or two interior transparent films. All of these materials must withstand relatively high temperatures (from 120° to 350°F) depending upon the number of covers and location of the layer within the collector. This is needed since any collector may be exposed to stagnation conditions at some time during its useful life. Due to higher temperatures in

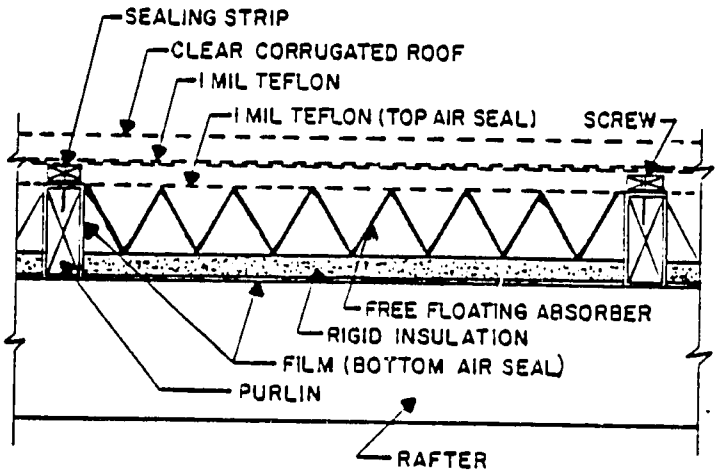

COLLECTOR WITH AIR FLOW ON BOTH SIDES OF ABSORBER

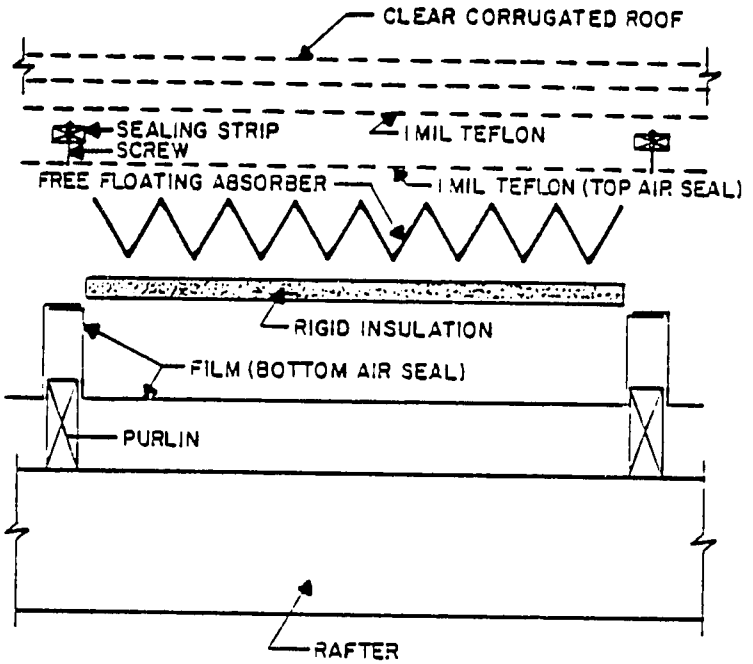

EXPLODED VIEW OF COLLECTOR WITH AIR FLOW ON BOTH SIDES OF ABSORBER

FIG. 4-1

Jamaica than for more northern locations, a light-weight C channel should be considered for use as purlins. Teflon is recommended for the one or two interior transparent covers. Rigid fiberglass insulation is available which will withstand a temperature of 450°F for short periods of time and a working temperature of 350°F. The sealing strip might also be a light-weight C channel with screws which will hold a continuous tension on the joint which forms the air seal between the top and the bottom films. A double faced tape is also available to use between the two films to ensure that a good air seal is achieved, but for longevity a clamp type seal is preferred. The clear corrugated fiberglass is suggested since it is available in large sheets to make a complete watertight roof and the teflon films will serve as a secondary leakproof roof. Fiberglass is known to be sensitive to high temperatures and will become opaque if so exposed. This degradation is a function of both temperature and time. Additional information may be available from the manufacturer. In any case, the use of at least one teflon film will be of benefit in decreasing the exposure of the fiberglass to the hot absorber plate. Teflon is the only film known to the writer which will stand the high temperatures within flat plate collectors during stagnation. It has one known fault, namely, it is subject to plastic creep if used in tension. Specific data should be obtained from Dupont. In any case, the corrugated absorber plate should be smooth on the top bends so that the teflon film can rest directly on the vees. This arrangement provides very short spans in the direction of the major tension within the teflon film and should be structurally safe for use in this manner. The above discussion, in particular obtaining good air seal as well as many other factors, will be necessary to successfully construct solar air heaters. Specifically, a duct at one end of the roof must receive air from each of the collector sections. Again, the air seal is essential. Generally, most of the dryers will be operated with the other end of the collector section open to the atmosphere.

Testing of Collector Materials - It is noted in the above discussion that temperatures within collectors may cause problems. For instance, if wood is used, the high temperatures will reduce the moisture content in the wood to a very low level, probably resulting in dimensional changes, particularly if the collector remains idle during rainy weather. Thus wood framing must be carefully checked out before using it in any significant size collector. In addition, some wood, when subjected to high temperatures, will outgas a gum which coats the inside of the cover plates resulting in a

loss of solar energy transmission. As pointed out, the corrugated fiberglass or the modified fiberglass produced by Kalwall and other cover materials should be checked for their effectiveness over a long period of time. One suggestion for checking these materials would be to construct small boxes from insulation materials, such as styrofoam. These units could be made as small as two feet square. Since styrofoam will not withstand the high temperatures, these must be lined with a couple of inches of high temperature insulation on the inside. Then measure the transmissivity of each cover before mounting them with one, two and three transparent covers on the different boxes. The covers can be attached with a weatherproof duct tape. This will provide a simple testing procedure to determine which materials will stand the high temperatures. After exposure in the sun, the covers can be removed each month and the transmissivity checked by alternately covering a pyranometer with the transparent material and then removing it. The percentage transmission can be computed from the two readings. It would be desirable to mount thermocouples on each cover and on the absorber plate for measuring the temperatures. This procedure should soon determine which materials would fail quickly. The feasibility of designing collectors with several covers in order to protect the top cover from the high temperature can be verified or discarded on the basis of temperature data and transmissivity.

A second concept which should be investigated to minimize temperature damage is the design of collectors for convective cooling during idle times or in the case of power failure. Louvers at the top and bottom of a collector section which will open automatically when power is cut off; or a manually operated system could be used.

APPENDIX E - Solar Grain Dryer Baseline Design

Given: Dry 1 ton (2000 lbs) of 20% M.C. Corn to 12% M.C.

Collector

Output temperature of 175°F

Ambient temperature of 90°F

$I = 250$ Btu/hr-ft^2

Where

M.C. = Moisture Content

BU = bushel; 1 cu ft = 0.8 BU

cfm = cubic foot per minute

h = convective heat transfer coefficient

I = Solar Radiation

Grain Volume:

Grain weighs approx. 60 lbs/BU or 48 lbs/ft^3

1 ton = 2000 lbs/48 lbs/ft^3 = 42 cu ft a 4' long x 4' wide x 3' deep = 48 ft^3

Alternative use 5' long x 5' wide x 2' deep (Bagged grain for this depth would cause uneven air flow)

Air Flow:

Design for 10 cfm/ft^3 x 48 cu ft = 480 cfm

Collector Design: (Using estimated parameters, with programmed Collector Design)

- Design collector for 480 cfm to produce 175°F
- Try designs with flow on both sides of absorber with both 1 and 2 teflon covers and a top cover of clear corrugated fiberglass.
- Use Vee-corrugated absorber and 1" of fiber insulation under the absorber.
- Collector parameters are estimated as follows:

fiberglass	0.82 transmissivity	(τ)
teflon	0.95 transmissivity	
absorber	0.95 absorbitivity	(α)

a. **2 Covers**

Thus: $\tau\alpha = 0.82 \times 0.95 \times 0.95$

Then: $\tau\alpha = 0.74$

Ta (ambient temperature) = 90°F

$I = 250$ Btu/hr-ft^2

one dead air space, U_t = 1.2 Btu/hr-ft^2°F
Ti = 90°F collector inlet temperature
1" on Ins. board, U_b = 0.21 G_2= 4.5 lbs/hr flow
Computed h_{r21} = 0.6 Btu/hr-ft^2-°F
Computed h_{r23} = 1.4 Btu/hr-ft^2 -°F
$h_2 = 2h_1$ = 6 Btu/hr-ft^2 - °F

Calculated: F' = 0.984 t_o = 195; eff. = 46%
U_L = 1.115

if G = 5.6;	T_o = 173,	eff. = 52%
if G = 6.0;	T_o = 178;	eff. = 51%
if G = 6.25;	T_o = 176;	eff. = 52%

Flow rate = 1.4 cfm/ft^2 = 6.25 lbs/hr-ft^2

1st Approx. Collector Area = 480 cfm/1.4 cfm/ft^2 = <u>346 ft^2</u>

F_R = 0.698

b. <u>3 Covers</u>

$\tau\alpha$ = 0.74 x 0.95 = 0.70
Est. U_t = 0.9 Btu/hr-ft^2-°F

Then: $h_1 = h_3$ = 3

h_2 = 6	F' = 0.989
h_{r21} = 0.6	U_L = 0.825
h_{r23} = 1.4	G = 6.75
U_b = 0.1	add insulation T_o = 174°F
U_t = 0.9	eff. = 54%

Flow rate = 1.5 cfm/ft^2

Approx. Collector Area = 480/1.5 = 320 ft^2

F_R = 0.777

Although this is a first approximation design, the heat and air flow required should be provided with 350 square feet of collector (a) or (b). A proposed collector layout is suggested in the collector development section of this report

with a final design to be based on testing of materials (particularly glazing materials) and collector development, to be achieved by construction of a model and checking its performance against theoretical values.

After further discussion with AMC, it was decided to design a 700 ft^2 collector for drying 2 tons of grain.

Collector Cost: (700 ft^2 collector for 2 tons of grain)

	Cost, U.S. $
Purlins 500 ft of 2" x 4" or 24 ga. 3" steel channel	240
1 mil Teflon film 1400 ft^2 ($0.40/$ft^2$ + 30%)	728
Alum foil reinforced paper (bottom air seal) 1200 ft^2 ($0.10/$ft^2$ + 30%)	156
350°F fiber insulation 750 ft^2 ($0.35 + 30%)	340
Clear fiberglass over 22 pc (4'x8') ($0.65/$ft^2$)	460
0.02" aluminum absorber plate* 1400 ft^2 at $0.43/$ft^2$	600
Paint 3 gals ($10/gal + 30%)	39
Fan 1000 cfm at 2.0" Water gauge	100
	$2,663

Materials $3.80 per square foot
Estimate labor at $3.80 per square foot
Total Collector Cost at $7.60/$ft^2$ or $5326 not including overhead or contractor's profit

*A thinner plate could be used or lower priced steel.

The cost of this collector is based on construction on top of an existing roof. If the collector is constructed as an integral part of a roof, the additional cost of the collector for new contruction is estimated at $4.80/$ft^2$ including labor.

Grain Dryer

The container should be 6' x 6' x 3' with a plenum underneath using a slatted floor for bagged grain or perforated metal for bulk grain. A dryer of this type requires approximately 2000 Btu per pound of water evaporated.

Pounds of water to be evaporated = (4000 lbs) $[\frac{(20-12)}{(100-12)}]$

= 363 lbs of water

Energy collected = 700 ft^2 x 1700 Btu/ft^2 - day x 0.52 eff.

= 619,000 Btu/day average

Energy needed = 363 x 2000 = 726,000 Btu

Since the average radiation level in Kingston for 20° slope to the south always exceeds 1700 Btu/day on the average, it is concluded that two tons could be dried on a clear day or on two partially cloudy days. For completely cloudy weather a fuel (probably a butane burner) would be required. This preliminary design is to be used to evaluate the feasibility of solar drying of grain, and a detailed design and collector development is necessary before construction (see collector development section of this report).

Drying System Cost and Economics

The cost of the grain bin is estimated at U.S. $300 plus $300 for duct work, and with 15% for contingencies plus 30% for construction supervision and profit, the total cost should be U.S. $8,900.

In discussing the value of a two ton capacity dryer with Mr. Cooke of AMC, he estimated the value added by drying and holding peas and beans at J. $0.45/lb. He is now handling 1,000,000 lbs/year resulting in a total value added of J. $450,000/year if these products are held to storage for marketing during the off-season. Holding a million pounds which cost J. $1.00 per pound cost J. $50,000 interest for six months at an interest rate of 10% per year. Estimating an insect-tight storage with fumigation to benefit equally in the value gained still leaves J. $200,000 increased value. This does not include benefits received from drying corn, onions and peanuts. Since three receiving locations would be used, J. $200,000/ (3 x 1.75) = U.S. $38,000/year should be a conservative estimate of the value added within the marketing channel for one drying unit which costs U.S. $8,900. The system pay back is less than one year.

APPENDIX F - Feasibility of Solar Preheating of Air for Rotary Drum Drying

Data

Dryer holds approximately 450 cu ft of coffee or cocoa
Estimate the air flow rate as 10 cfm/ft^3
Flow = 4500 cfm per dryer
Roof Area: 48' x 280' = 130,000 ft^2 at coffee facility
Heat required = 36 gals (US)/hr, no. 2 diesel for 8 dryers

Heat Required and Solar Heat Available

Computing on the basis of two dryers and one-fourth of the building 280/4 = 70'
Area = 48' x 70' = 3,360 ft^2 of collector area
Two dryers have estimated flow of 9000 cfm
9000/3360 = 2.67 cfm/ft^2 of collector
Collector efficiency from design of figure 3b is 60%+ at 1700 Btu/day ft^2
1700 x 3360 x 0.6 = 3.43 x 10^6 Btu/day
The heat available from (36/4) = 9 gal/hr of fuel oil is:
9 x 130,000 Btu/gal x 0.7 efficiency = 820,000 Btu/hr
The maximum solar heating rate is:
300 Btu/hr x 0.6 x 3360 ft^2 = 605,000 Btu/hr, so all solar heat can be utilized since 20 to 30 hours is required to dry a batch of coffee or cocoa.
On a yearly basis, operating 100 days, the total heat from solar energy should be 343 x 10^6 Btu and the fuel replaced is estimated as:
343 x 10^6/(130,000 x 0.7) = 3,700 gals.

Economics

The collector is estimated to cost U.S. $9.60 per square foot so 3360 ft^2 x $9.60/sq ft = U.S. $32,200. Save 3700 gallons of fuel oil currently selling for U.S. $0.93/gal; thus annual savings = U.S. $3400/yr.

$$\text{Payback in years} = \frac{\text{System Cost}}{\text{annual saving} - 2\% \text{ of system cost}}$$

$$= \frac{32,200}{3400 - 645} = 11.6 \text{ years}$$

Conclusion

This system should be subjected to a detailed engineering design as soon as the collector development program permits. This preliminary engineering design shows an opportunity for saving U.S. $3,400 in foreign exchange while installing a system which might be economical.

APPENDIX G - Feasibility of Solar Preheating of Air for Drying Brewer's Grain

Data

Water removed/day = 78×10^3 lbs/day (2 dryers)
Roof area = 16,500 ft^2
Estimated minimum average solar radiation = 1700 Btu/ft^2 day
Collector cost = U.S. \$7.60/ft^2
Operating time 250 days/year
Collector efficiency 40% at 1/2 cfm/ft^2 flow rate*
Location: Desnoes & Geddes, Kingston

Collectible Solar Heat

1700 Btu/ft^2 - day x 0.4 x 16,500 ft^2 x 250 days/yr
= 2.8×10^9 Btu/yr

Estimated Heat Required

78×10^3 lbs of water/day x 2000 Btu/lb x 250 days/yr
= 39×10^9 Btu/yr

Economics

For this size system add 10% for contingencies and 15% for overhead and profit, then collector cost = 16,500 x \$7.60 x 1.1 x 1.15 = \$158,600
Fuel replaced = 2.8×10^9 Btu/(130,000 Btu/gal. x 0.7)
= 30,700 gal/yr
30,700 U.S. gal. x \$0.93/gal = \$28,600

$$\text{Pay back period} = \frac{158{,}600}{28{,}600 - (0.02 \times 158{,}600)} = 6.2 \text{ years}$$

*The collector operates at low efficiency at low flow and the air flow rate must be equal or less than the dryer flow rate, est. at 4000 cfm/dryer as a minimum.

Conclusion

This system should be subjected to a detailed engineering design as soon as the collector development program permits. This preliminary engineering design shows an opportunity of saving nearly J. \$30,000 in foreign exchange while installing an economically feasible system.

APPENDIX H - Energy Analysis of Tumeric Drying

Reference: Mr. Rhodes, Hanover Spices, Tel: 9562420

Given:

1. Plant received 1000 tons of raw tumeric.
2. Dried tumeric = 138 tons.
3. Dried on barbeque, if possible, then dried in the tunnel dryer at 180° to 210°F.
4. Heat source is butane gas - used 22,200 gals. for 1000 tons of raw product for drying to 12% M.C.
5. Concrete tunnel is 6'4" inside x 7'2" high x 50' with a 4 1/2 ft high duct over the tunnel for the fan and burner. A concrete slab 5" thick by 42 ft long separates the tunnel from the fan duct.

Drying Tunnel Heat Stored and Loss:

6'6" wide, 11'6" tall, 50' long with walls 8" thick counting ends also solid and horizontal slab 5" thick x 42' x 6 1/2'

concrete volume = 5/12 x 6 1/2 x 42 + (6.5 x 2) + (2 x 11.5) 50 + 2 x 6.5 x 11.5

= 113.75 + 650 + 1150 + 149.5

= 2060 ft^3

Estimating the concrete cools from average of 160°F to 90°F, i.e., 70°F; and must be reheated each day.

The heat required is:

$Q = C_p\ D\ V\ (dt) = (Btu/\#\ day°F)(\#/ft^3)(°F)(ft^3)$

= Btu/Day

Q = 0.2 (150) (2060) (70) = 4,326,000 Btu/day

or fuel = Q/94,000 = 46 gal.

Heat Loss by Conduction:

Area = 6 1/2 x 50 + 11.5 x 50 x 2 + 2 x 6 1/2 x 11 1/2

= 1625 ft^2 exposed

for dT = 190-90 = 100°F;

Using the same coefficient inside as 15 mph outside.

$$U = \frac{1}{1/6 + 8/12 + 1/6} = 1 \text{ Btu/hr-ft}^2\text{-°F}$$

$q = U\ A\ dT = 1 \times 1625 \times 100 = 162{,}500$ Btu/hr
Since tumeric dried on the barbeque takes approximately 8 hours and green tumeric take 16 hr. est. 12 hours average operating time with 6 tons/load/day of green material

For drying 1000 tons of green tumeric would require 1000/6 = 167 days or loads
Total operating time = 167 x 12 = 2004 hours.

The conduction heat loss
$q_c = 2000$ hrs x 162,500 Btu/hr = 325×10^6 Btu/yr

The drying tunnels heat loss
$q_o = 4.326 \times 10^6 \times 167$ days = 722.4×10^6 Btu/yr

The total heat loss in one year
$q_c + q_o = (325 + 722.4) \times 10^6$ Btu = 1048×10^6 Btu/yr

At 80% fuel burning efficiency, the heat loss in Btu of fuel
$1048 \times 10^6/0.8 = 1310 \times 10^6$ Btu/yr

Estimated Butane required for lost heat
$1310 \times 10^6/94 \times 10^3 = 13{,}940$ gallons/yr

<u>Drying Efficiency (without any heat loss)</u>

It usually requires 1800 to 2400 Btu to evaporate a pound of water while drying grain from 28% M.C. to 14% M.C. Drying at high M.C. of material takes less heat.

Net use of fuel = 22,200 gal total used minus 13,940 gal
= 8200 gal

Heat available with 0.8 efficiency = 8200 x 94,000 Btu/gal x 0.8 eff. = 616×10^6 Btu

Estimate 1/2 product is dried from 76% to 12% and the other half from 40% to 12% M.C. at 1400 Btu/# and 1800 Btu/#

Take 500 tons from 76% to 12%.

$$\text{water removed} = 500 \text{ tons} \times \frac{76\% - 12\%}{100\% - 12\%} = 364 \text{ tons}$$

$$q = 364 \times 2000 \times 1400 = 1020 \times 10^6 \text{ Btu}$$

$$\text{Water removed to } 40\% = 500 \text{ tons} \times \frac{76\% - 40\%}{100\% - 40\%} = 300 \text{ tons}$$

$$\text{Water removed to } 12\% = 300 \text{ tons} \times \frac{40\% - 12\%}{100\% - 12\%} = 96 \text{ tons}$$

$$\text{Heat required for } 40\% \text{ to } 12\% \text{ M.C.} = 96 \text{ tons} \times 2000 \times 1800 = 346 \times 10^6 \text{ Btu}$$

Or, if all tumeric was dried on barbeque to 12% M.C. then 1020×10^6 Btu + 346×10^6 Btu = 1366×10^6 Btu would be needed to dry the entire crop plus losses. Since 616×10^6 Btu is available after the current losses, it is concluded that less than half the tumeric is dried from the raw product directly in the tunnel dryer. Thus, the drying time has probably been overestimated, but the losses are still very significant.

Conclusion:

The losses would be reduced appreciably by adding insulation inside the tunnel and in the fan duct over the tunnel. Instead, it is recommended that a drying study be made to determine if tumeric can be dried by more efficient means in both energy use and in manpower required. Another reason for this study, perhaps requiring some research, is that it appears that 25 hoursepower fans might also be greatly reduced if drying could be accomplished in bulk.

APPENDIX I Research and Development of Agricultural Product Drying

The Objective:

To secure, develop and put into practice the necessary knowledge for the drying of agricultural products utilizing solar energy.

Reason:

Drying agricultural products and foods is needed to reduce spoilage and degradation of food supply. Drying and protection from insects is necessary if the legumes and corn are to be preserved for consumption between harvests. Solar collectors of a simple type can heat air to the 150°-175°F temperature range for effective drying of agricultural products to low moisture content. The collectors required for drying are rather simple in design and construction. This technology is rather easy with the abundant sunshine and relatively high temperatures in Jamaica.

Suggested Procedure:

An individual with a sound engineering background must be allotted adequate time, have keen interest, and the initiative to develop the knowledge required for designing solar-heated air dryers. The individual should thoroughly review all literature which can be located on drying the specific products of Jamaica. The several engineering designs for dryers should follow the most logical methods suggested from the literature. During this process he should develop specific questions on information which is needed for engineering design. It would probably be helpful for the individual to travel to several locations where drying has been practiced in order to answer specific engineering questions. Information gathered from this travel may illustrate some designs which can be easily made, with reasonable assurance that the parameters used for the designs are accurate. One year of training is probably needed for an engineer to develop the requisite experience for design.

To successfully introduce this new technology it is essential that the operators have an interest in preserving the crop, know the importance of drying as a part of the preservation process, understand how the dryers work, know how to control the drying for each product (to produce a high quality) and seek assistance if any part of the process is not up to standard. The engineer should closely monitor the first several dryers to ensure their operation is maintained as designed, to solve any problems and to assist him in developing

improvements. Thus education, management, personal interest and initiative are needed in establishing a new technology.

Specific Products:

Presently there is a need for drying peas, beans and corn, in order to preserve their quality and to allow transport and use these products after the harvest. Much of the knowledge needed for drying these products is available in the literature. The drying of tumeric is a special problem, on which little may be available in literature. However, the drying of this product needs immediate attention so that the tumeric dryer in Hanover can either be re-designed or remodeled so that the energy losses are significantly reduced.

The drying of chili peppers and other vegetables, which could be utilized as dehydrated foods for manufactured soups and other food products, should be investigated. DaCosta Brothers are interested in operating a pilot project for testing the solar drying of these products.

APPENDIX J Final Report Conference - Splinter Group Discussion

Before the U.S. Energy Team members left Jamaica, a Final Report Conference was held at the Jamaican Pegasus Hotel on November 13 and 14, 1979. During the first day of the conference, the U.S. Energy Team members and Jamaican counterparts presented the findings, conclusions and recommendations of each of the specialized studies. For greater exposure and increased audience participation, splinter group discussions were held during the second day. Each of the studies had a 2-3 hour question and answer session in which study parameters were reviewed and results highlighted. The following is a synopsis of the Solar Agricultural splinter group discussion.

Monitor: Mr. W.R. Ashby - Ministry of Mining and Natural Resources

Respondent: Dr. Blaine Parker - U.S. Energy Team member

Q.4.1. Since it is obviously very sunny in Jamaica, why must we establish meteorology stations to record solar radiation data?

A.4.1. (Parker) To design solar heating systems which are dependable, we need data which show the variability of solar radiation over a period of several years. There are other ways to lessen the risk of system failure -- a back-up fossil fuel system, or extreme over-design of the solar system -- but without long-term radiation data, these are merely guesses. Basically, we must have the radiation data if we are to design an efficient and cost-effective system. The data computed by Peter Dowding provides a good start for designs but it is based on a short record. Further, we simply cannot use focusing collectors without knowing the direct radiation.

Q.4.2. Since, as water temperature increases, the absorption rate decreases, how can we maximize the absorption rate given a constant flow?

A.4.2. (Parker) The hotter the water gets, the less efficiently the liquid collector operates. For this reason, I prefer air-type heaters. Although heat transfer occurs more efficiently with water than with air.

Q.4.3 Teflon is expensive, yet you use it in your illustration of a collector. Why is that?

A.4.3. (Parker) To my knowledge, teflon is the only transparent film material which can withstand temperatures up to 450°F over an extended period of time. The major disadvantage is that it stretches under tension. To correct this, I recommend using vee-shaped collectors because they support the teflon every two to four inches (depending on the size of the vee). This support decreases the tension.

Q.4.4. How long is it before teflon discolors?

A.4.4. (Parker) Discoloration does not occur in teflon to my knowledge.

Q.4.5. I understand that we lack skilled technicians in the alternative energy field. How, then, could we implement this recommended program? Several years ago, JIDC brought in skilled technicians and matched them with local counterparts in order to train local people in energy technology. Couldn't MMNR do something similar?

A.4.5. (Ashby) That is one of the ways we intend to derive the program structure from the recommendations.

A.4.5. (Parker) You mean that we will need to bring in people who already have practical engineering experience in solar technology?

A.4.5. (Ashby) Yes. I have already discussed this training program with Mr. Hulehan, USAID, and we will approach it in the way we have just mentioned.

Q.4.6. What financial benefits will accrue if we institute solar crop drying?

A.4.6. (Parker) Based on Mr. Cooke's AMC data, I estimate that between harvest average price for red peas is at least J. $.45/lb higher than during harvest. I took half of the gain for drying with solar power and half of that for storage, and then computed a pay back period of less than a year. If we hold, dry, and properly market these crops during the off-season (rather than flooding the market during harvest and later importing the product), I believe that the demand would even trigger increased production.

Q.4.7. Is AMC the only producer large enough to justify the expense of solar dryers?

A.4.7. (Parker) No. Smaller producers may bring their products together to obtain sufficient size to benefit financially from a solar dryer.

Q.4.8. On page 5 of your Conference Report Proceedings, you propose acquiring 40 solar air-type crop dryers. What is that figure based on?

A.4.8. (Parker) I estimate a long-term need for 40 dryers; for the next five years, I project a need for 14 dryers.

Q.4.9. How should we handle the crops before and after solar drying?

A.4.9. (Parker) The crops are presently handled in bags, which, because of air leakage around the bag, may not be usable with solar drying. Instead, you may use a bulk handling with augers and bin drying.

Q.4.10. Do your cost estimates include handling costs?

A.4.10. (Parker) No, they do not.

Q.4.11. Is it financially feasible to use solar systems to dry chicken meat?

A.4.11. (Parker) I don't have experience in drying chicken meat, however, these solar collectors easily provide temperature outputs between 150°F and 170°F which can be used to dry other products.

Q.4.12 What is the cost of teflon?

(Parker) Large quantities of teflon (1 mil. thick) cost about U.S. $.22 to $.23/sq ft in the United States. Smaller quantities of the same thickness cost about U.S. $.40/sq ft.

Q.4.13. You mentioned some excellent systems which might be used on small farms (4-5 tons of material to dry). Could you include these systems in your report so that people can evaluate them for possible adaptation to Jamaican needs? I would hope that the Ministry of Agriculture would test those systems and then use them for demonstration.

A.4.13. (Parker) Very good. (No further answer given because session was called to an end.)