BIBLIOGRAPHIC DATA SHEET

1. CONTROL NUMBER: PN-AAJ-297

2. SUBJECT CLASSIFICATION (695): AP10-0000-G662

3. TITLE AND SUBTITLE (240)

Jratunseluna Basin updated development plan; executive summary

4. PERSONAL AUTHORS (100)

5. CORPORATE AUTHORS (101)

PRC Engineering Consultants, Inc.

6. DOCUMENT DATE (110): 1980

7. NUMBER OF PAGES (120): 31p.

8. ARC NUMBER (170): ID627.8.P921

9. REFERENCE ORGANIZATION (130): PRC/ECI

10. SUPPLEMENTARY NOTES (500)

(Report consists of executive summary, main report, and appendices A - H: PN- AAJ-297 - PN- AAJ-307)

11. ABSTRACT (950)

12. DESCRIPTORS (920)

Water resources
River basins
Irrigation
Indonesia
Flood control
Dams
Development strategy
Water supply
Hydroelectric power

13. PROJECT NUMBER (150)

14. CONTRACT NO.(140): AID/SOD/PDC-C-0215

15. CONTRA(TYPE (14(

16. TYPE OF DOCUMENT (160)

AID 590-7 (10-79)

PN-AAJ-297

ID
627.8
P921
EXEC. SUMMARY

:TORATE GENERAL OF WATER RESOURCES DEVELOPMENT
TRY OF PUBLIC WORKS
)BLIC OF INDONESIA

JRATUNSELUNA BASIN

UPDATED DEVELOPMENT PLAN

EXECUTIVE SUMMARY

MAY 1980

SUBMITTED BY

PRC ENGINEERING CONSULTANTS, INC.
ENGLEWOOD, COLORADO, U.S.A. SEMARANG, INDONESIA

DIRECTORATE GENERAL OF WATER RESOURCES DEVELOPMENT
MINISTRY OF PUBLIC WORKS
REPUBLIC OF INDONESIA

JRATUNSELUNA BASIN

UPDATED DEVELOPMENT PLAN

EXECUTIVE SUMMARY

MAY 1980

SUBMITTED BY

PRC ENGINEERING CONSULTANTS, INC.
ENGLEWOOD, COLORADO, U.S.A. SEMARANG, INDONESIA

PRC Engineering Consultants, Inc.

prc

The Directorate General of
Water Resources Development
Ministry of Public Works
Jl. Pattimura 20/7
Kebayoran Baru
Jakarta Selatan

Semarang
June 5, 1980

Our file: 1241/C/9 - 154/80
Subject : Transmittal of Main Report on the Updated Development Plan for the Jratunseluna Basin.

Attention: Ir. Sarbini Ronodibroto
Director Planning & Programming.

Dear Sir:

We are pleased to submit our Main Report on the Updated Development Plan for the Jratunseluna Basin, of which this document is the Executive Summary. This report has been prepared under the terms of Contract No. B.58/CES/79 and a subsequent amendment No. B.248/CES/80 between the Directorate General of Water Resources Development and PRC Engineering Consultants, Inc. The report comprises the following documents which contain all details of the study for the development plan and the supporting data.

1. Updated Development Plan - Main Report
2. Updated Development Plan - Appendix A - Hydrology
3. Updated Development Plan - Appendix B - Agriculture and Irrigation
4. Updated Development Plan - Appendix C - Dams and Hydropower
5. Updated Development Plan - Appendix D - Project Planning
6. Updated Development Plan - Appendix E - Economics
7. Updated Development Plan - Appendix F - Soil and Water Conservation (Two Volumes)
8. Updated Development Plan - Appendix G - Social and Environmental Assessment
9. Updated Development Plan - Appendix H - Sedimentation Studies (Jragung Watershed)

In addition to the above listed documents, following reports were submitted in November 1979 which related specifically to the integrated use of water resources of the Tuntang and Jragung Subbasins.

A Planning Research Company
Post Office Box 3006, Englewood, CO 80111
Telephone (303) 773 - 3788 Cable ECIDEN Telex 45551

Semarang Office : Post Office Box 220, Semarang
Telephone 315061/311740 Cable ECISEMARANG Telex 22329 JRATUN SM

1. Special Report I - Geology
2. Special Report II - Municipal and Industrial Water Supply
3. Special Report III - Drainage and Flood Control.

The purpose and background of the study, the scope of work, a description of the project area, and the conclusions and recommendations made by us, are given in the following sections of this Executive Summary.

The Jratunseluna Basin Development Plan, prepared originally by NEDECO in 1973, has been updated under your general direction by keeping the following considerations in view.

1. The operation of the proposed reservoirs in the basin will be controlled by releases of water for irrigation, and municipal and industrial (M & I) water supply in the project area and the city of Semarang, without significantly reducing hydropower generation at the existing power plants in the Upper Tuntang System. Additional hydropower potential at the proposed reservoirs should be evaluated as a byproduct of the above two releases.

2. Small-size, low-cost individual projects, which are compatible with the overall development plan should be phased early in the implementation schedule.

The major findings of the study are briefly stated hereunder.

1. The integration of water resources of Eastern Subbasins comprising the Lusi-Serang System with the Western Subbasins comprising the Tuntang-Jragung-Penggaron-Dolok System did not prove worthwhile. The development of the two systems should be considered independently.

2. Rawa Pening Project is a key element in the updated development plan. If the Rawa Pening Lake can be raised with or without dikes, it will create the least expensive storage in the entire basin. The storage at Rawa Pening can provide the needed M & I water (up to 1,500 ℓ/s) for the city of Semarang and irrigate 14,204 to 18,060 hectares of the Tuntang-Jragung Service Area including the Sedeku Area perennially.

   The problems in raising Rawa Pening are of technical and sociological nature. If these potential problems, which have been spelt out in the Main Report, cannot be solved and Rawa Pening cannot be raised, then implementation of the Jragung Dam Project should be considered.

3. The following low-cost, small-size projects, which are compatible with the updated development plan, are phased for early implementation.

   Rawa Pening

   Dolok Dam

   Mid Lusi Diversion

   Glapan Barrage.

   Full scale feasibility studies of these projects leading to design and construction should be started immediately.

4. An implementation schedule for near-future development of the existing rainfed areas in the Serang-Lusi Subbasins to wet season technical irrigation has been proposed. These projects are:

   South Grobogan Irrigation Scheme

   Mid Lusi Irrigation Scheme

   Juana Valley Irrigation System.

   It is proposed that the implementation of the wet season irrigation schemes should proceed simultaneously with the implementation of the Development Plan.

It has been our pleasure to work with the Directorate Staff at Jakarta and the Jratunseluna Project office at Semarang whose cooperation, advice and hard work have been outstanding throughout the course of the study. We hope the Updated Development Plan and our proposal to implement wet season irrigation in the rainfed areas of the Jratunseluna Basin will meet your approval. PRC/ECI would be honored to assist your organization in following up this study for implementation of the development plans.

With best regards.

Very truly yours,
PRC Engineering Consultants, Inc.

Saeed A. Rana

Saeed A. Rana
Resident Manager.

SAR/ m.

PURPOSE AND AUTHORIZATION

BACKGROUND OF STUDY

PROJECT AREA

JRATUNSELUNA BASIN UPDATED DEVELOPMENT PLAN

EXECUTIVE SUMMARY

PURPOSE AND AUTHORIZATION

PRC Engineering Consultants, Inc. (PRC/ECI) of Denver, Colorado, U.S.A. was selected by the Directorate General of Water Resources Development (DGWRD) of the Ministry of Public Works, Government of Indonesia (GOI), to prepare an integrated development plan for the Tuntang/Jragung Rivers in the Jratunseluna Basin of Central Java. The study was subsequently extended to all the subbasins of the Jratunseluna Basin for the purpose of evaluating surface water resources for multipurpose utilization with irrigation, and municipal and industrial (M & I) water supply being the main uses. The hydropower generation was to be evaluated as a byproduct of releases for irrigation and M & I supplies.

The surface water resources of the Jratunseluna Basin were originally identified by NEDECO [1] in the Master Plan for basin development prepared in 1973. That Master Plan has been updated in this study by including the present-day data, conditions and constraints. The results of the study are presented in this Updated Development Plan.

The study was authorized under a contract No. B.58/CES/79, dated August 20, 1979 between GOI and PRC/ECI which was later amended by Amendment I No. 248/CES/80 dated April 23, 1980. The completion date of the contract is June 15, 1980.

BACKGROUND OF STUDY

The Jratunseluna Basin Development Plan [1], formulated by NEDECO in the year 1973, contained recommendation for building dams and other engineering works on the rivers in the basin for the purpose of providing water for irrigation, generating hydropower and effecting flood control in their respective areas. The development on each river system was planned individually and the coordinated use of the combined water resources of the basin was not studied in that plan.

Prior to the presentation of NEDECO's Development Plan a study for developing the waters of the Dolok, Penggaron and Jragung Subbasins was done [2] as a result of which preliminary feasibility reports for building dams on these three rivers were presented. The most notable projects identified in that plan are a dam on the Jragung River at Jragung; a dam on the Serang River at Ngrambat or Kedungombo; a dam on the Tuntang River at Glapan; and a possible dam on the same river at Gunung Wulan. Towards implementation of the Development Plan, feasibility studies of the Jragung [4], Glapan [7], Ngrambat Dam [6] were carried out followed by preparation of detailed designs for the Jragung and the Kedungombo (Ngrambat) Dam [5, 11].

In addition to the abovementioned Development Plan, the potential for development of Rawa Pening, a natural lake in the head waters of the Tuntang River, was studied at feasibility level by NEDECO in the year 1971/72 [8], as a result of which certain short-term and long-term measures were recommended for the exploitation of the potential storage capacity of the lake for irrigation development and hydropower generation. Also, a Master Plan was prepared by Burns and McDonnells in the year 1976 [10] for supplying municipal and industrial water to the city of Semarang. In that plan, demand for water was placed on certain water resources developments of the Jratunseluna Basin which was not accounted for in the original Development Plan. It was important that the M & I water

supply from the water resources of the surrounding basins, including the Jratunseluna Basin on which the city of Semarang depends should also be included in the development plan.

On the Jragung River, a dam was studied at feasibility level and final designs were prepared for construction. In that study it was found that for the development of water resources of rivers draining small subbasins, it is prudent to consider integrated development of the subbasins by making coordinated use of waters of adjoining subbasins by transbasin or interservice-area diversions. Similarly, for the development of the Serang River System [11], it was recognized that the plan of development should also consider the Lusi River System for an integrated development of the water resources of both river systems. Likewise the waters of the Serang and the Tuntang Rivers could be put to optimum use by integrated and coordinated development. A similar prospect exists to the west of the Jragung River, where the Dolok and Penggaron Rivers had existing wet season irrigation in service areas which could be combined into one block, and part of that area could be integrated with the Jragung Service Area.

Inasmuch as the coordinated development of the water resources of the Jratunseluna Basin would yield considerably more benefits, as compared with the case in which the water resources of the constituting subbasins are individually exploited, it was concluded that a fresh evaluation should be made of the development possibilities of all the Jratunseluna Basin. A study originally started for the subbasins of the Tuntang and the Jragung Rivers was consequently extended to include all the subbasins of the Jratunseluna Basin.

PROJECT AREA

The Jratunseluna Basin is formed by the morphological action of the five main rivers of Central Java, namely, Jragung, Tuntang, Serang, Lusi and Juana. Two other small rivers falling within the basin but draining directly into the Java Sea are the Dolok and the Penggaron Rivers. Besides this system of main rivers, there are a number of tributary streams which are part of the total water resources potential of the basin.

The Jratunseluna Basin covers an area of about 7,700 km^2 including part or all of the following seven Kabupatens (Regencies): Semarang, Blora, Demak, Purwodadi, Pati, Kudus and the Kotamadya (Municipality) of Semarang. The basin is bounded by the slopes of the volcanoes Ungaran, Telomoyo and Merbabu on the south west, by volcano Muria on the north, highlands from where the Lusi River originates on the east and the south, and by the Java Sea on the remaining sides. The watersheds of most of the streams in the basin are located on the slopes of the above named extinct volcanoes.

The location map of the Project Area is presented in Figure I-1 and a schematic diagram of the basin features is given in Figure I-2. The potential irrigation service areas in the Jratunseluna Basin are shown in Figure I-3.

FIGURE 1-

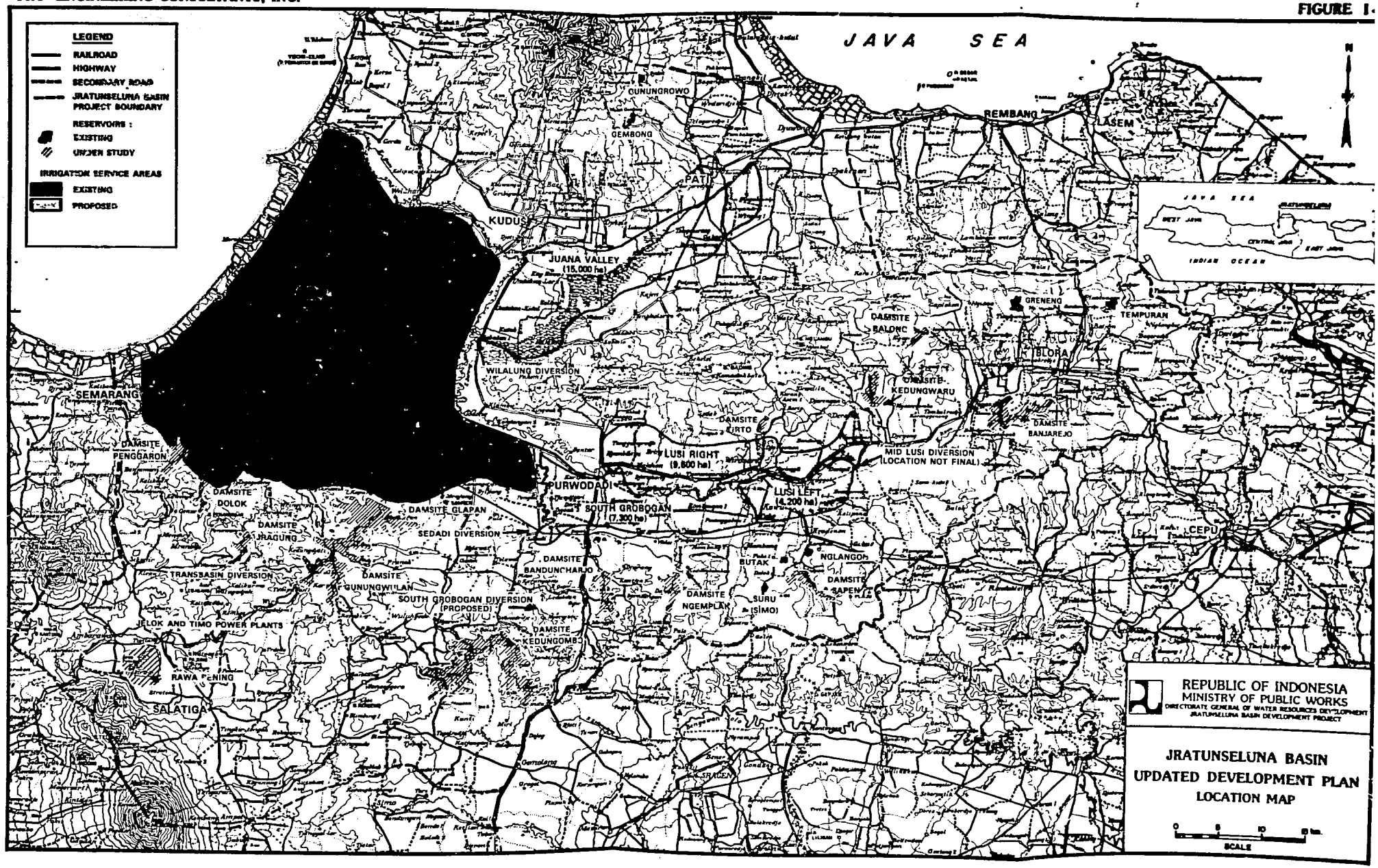
LEGEND
RAILROAD
HIGHWAY
SECONDARY ROAD
JRATUNSELUNA BASIN PROJECT BOUNDARY
RESERVOIRS :
EXISTING
UNDER STUDY
IRRIGATION SERVICE AREAS
EXISTING
PROPOSED
JAVA SEA
N
GUNUNGROWO
GEMBONG
REMBANG
LASEM
PATI
KUDUS
JUANA VALLEY
(15,000 ha)
GRENENG
TEMPURAN
DAMSITE BALONG
BLORA
WILALUNG DIVERSION
SEMARANG
DAMSITE KEDUNGWARU
DAMSITE BANJAREJO
DAMSITE PIRTO
DAMSITE PENGGARON
LUSI RIGHT
(9,800 ha)
MID LUSI DIVERSION
(LOCATION NOT FINAL)
PURWODADI
LUSI LEFT
(4,200 ha)
DAMSITE DOLOK
SOUTH GROBOGAN
(7,300 ha)
DAMSITE GLAPAN
DAMSITE JRAGUNG
SEDADI DIVERSION
CEPU
DAMSITE BANDUNCHARJO
BUTAK
NGLANGOH
DAMSITE SAPEN
TRANSBASIN DIVERSION
DAMSITE GUNUNGWULAN
SOUTH GROBOGAN DIVERSION
(PROPOSED)
DAMSITE NGEMPLAK
SURU (SIMO)
JELOK AND TIMO POWER PLANTS
DAMSITE KEDUNGOMBO
RAWA PENING
SALATIGA
SRAGEN
JAVA SEA
WEST JAVA
CENTRAL JAVA
EAST JAVA
INDIAN OCEAN
REPUBLIC OF INDONESIA
MINISTRY OF PUBLIC WORKS
DIRECTORATE GENERAL OF WATER RESOURCES DEVELOPMENT
JRATUNSELUNA BASIN DEVELOPMENT PROJECT
JRATUNSELUNA BASIN
UPDATED DEVELOPMENT PLAN
LOCATION MAP
0 5 10 15 km
SCALE

FIGURE I-2

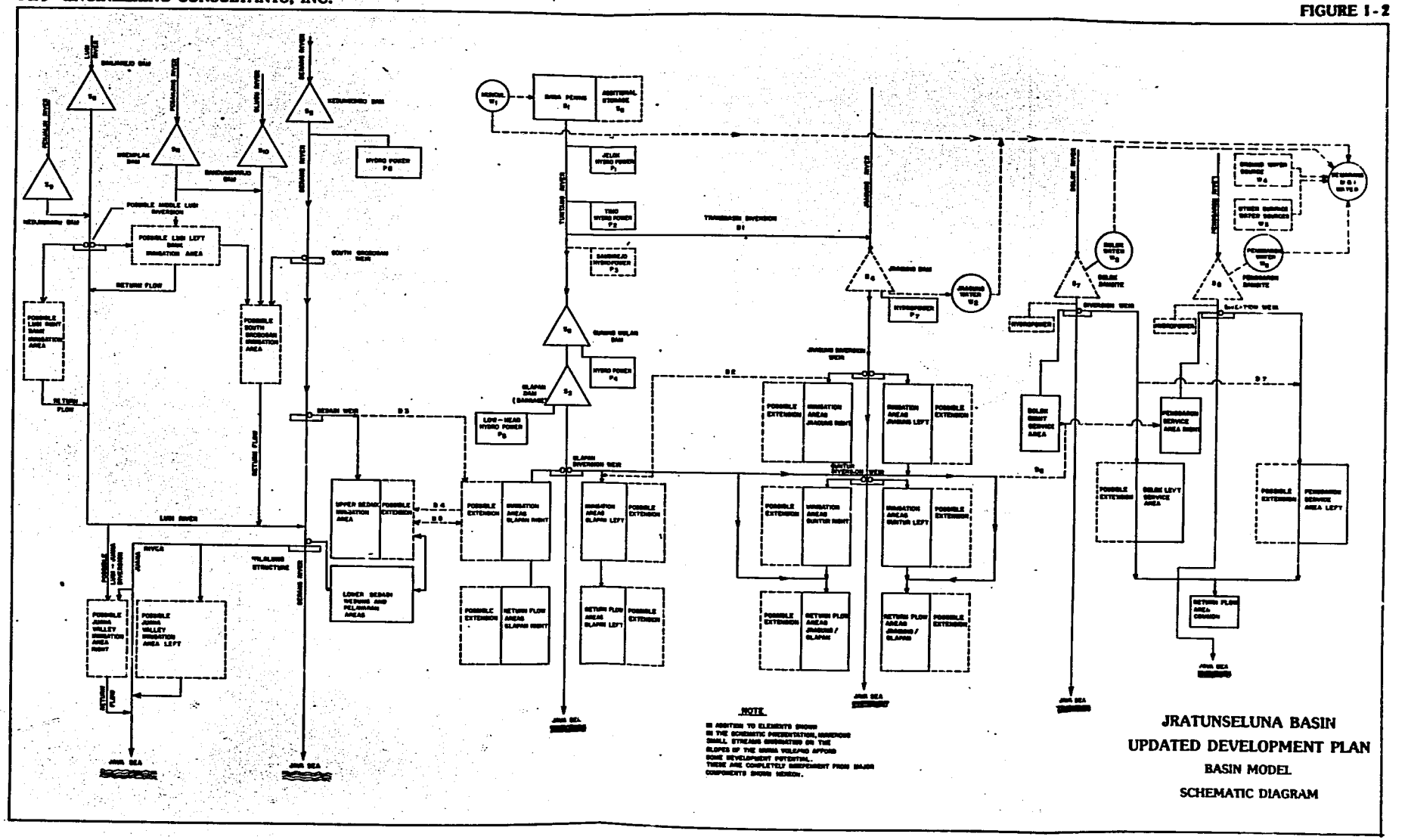
JRATUNSELUNA BASIN
UPDATED DEVELOPMENT PLAN
BASIN MODEL
SCHEMATIC DIAGRAM
NOTE
IN ADDITION TO ELEMENTS SHOWN IN THE SCHEMATIC PRESENTATION, NUMEROUS SMALL STREAMS EMANATING ON THE SLOPES OF THE MERA VOLCANO AFFORD SOME DEVELOPMENT POTENTIAL. THESE ARE COMPLETELY INDEPENDENT FROM MAJOR COMPONENTS SHOWN HEREON.
JAVA SEA
HYDRO POWER
RETURN FLOW
LUBI RIVER
SEBAM WEIR
SEBAM RIVER
TRANSBAN DIVERSION
SLAPAN DIVERSION WEIR
SUNTER DIVERSION WEIR
JRAGUNG DIVERSION WEIR
DOLOK DIVERSION WEIR
PENGARAN RIVER
DOLOK RIVER
TURLUNG STRUCTURE
SOUTH SEBAGAN WEIR
POSSIBLE EXTENSION
IRRIGATION AREAS
RETURN FLOW AREAS

FIGURE I-3

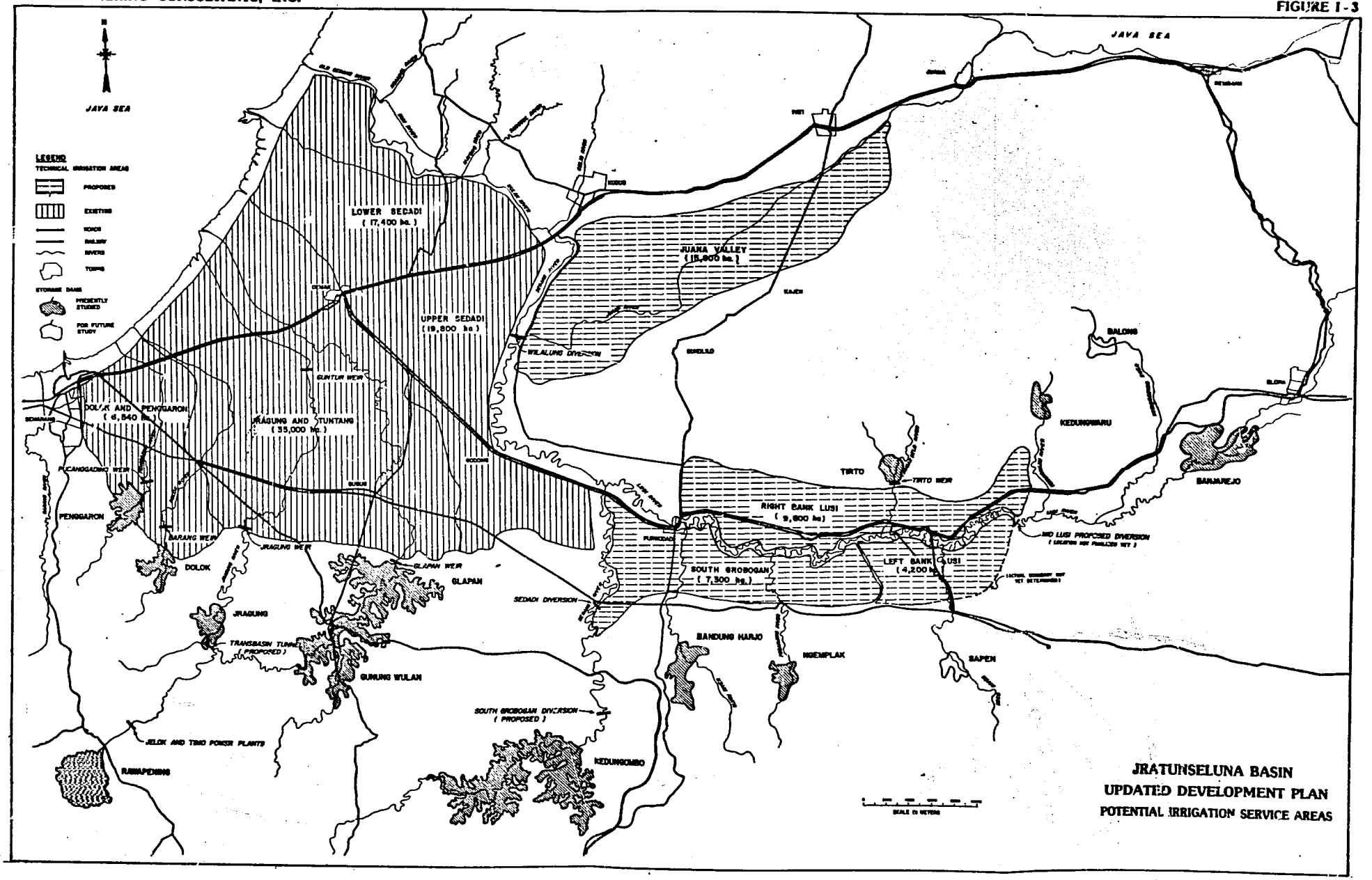
JAVA SEA
LEGEND
TECHNICAL IRRIGATION AREAS
PROPOSED
EXISTING
ROADS
RAILWAY
RIVERS
TOWNS
STORAGE DAMS
PRESENTLY STUDIED
FOR FUTURE STUDY
LOWER SEDADI
(17,400 ha.)
UPPER SEDADI
(19,800 ha)
JUANA VALLEY
(15,000 ha.)
WILALUNG DIVERSION
GUNTUR WEIR
DOLOK AND PENGGARON
(6,540 ha.)
RAGUNG AND TUNTANG
(35,000 ha.)
PUCANGGADING WEIR
PENGGARON
BARANG WEIR
JRAGUNG WEIR
DOLOK
GLAPAN WEIR
GLAPAN
JRAGUNG
TRANSBASIN TUNNEL
(PROPOSED)
GUNUNG WULAN
SEDADI DIVERSION
SOUTH GROBOGAN DIVERSION
(PROPOSED)
JELOK AND TIMO POWER PLANTS
RAWAPENING
KEDUNGOMBO
KUDUS
SUSUK
SOCORE
SUMOLILO
KAJEN
TIRTO
TIRTO WEIR
RIGHT BANK LUSI
(9,600 ha)
PURWODAD
SOUTH GROBOGAN
(7,300 ha.)
LEFT BANK LUSI
(4,200 ha)
MID LUSI PROPOSED DIVERSION
BANDUNG HARJO
NGEMPLAK
SAPEN
BALONG
KEDUNGWARU
BANJAREJO
SCALE IN METERS
JRATUNSELUNA BASIN
UPDATED DEVELOPMENT PLAN
POTENTIAL IRRIGATION SERVICE AREAS

CONCLUSIONS AND RECOMMENDATIONS

CONCLUSIONS AND RECOMMENDATIONS

The study to update the Development Plan of 1973, prepared by NEDECO for the Jratunseluna Basin, has been completed. All projects in the constituting subbasins (Figure I-1), studied and reported by previous investigators and those identified during the course of this study were examined individually. Then, different combinations of projects were analyzed to produce a logical and viable scheme for the overall development of the water resources of the entire basin.

The optimization of the development plan was derived with the help of a mathematical model of the basin (Figure I-2). The physical characteristics of the basin, potential irrigation service areas (114,840 ha), projected demands for M & I water in the city of Semarang (4,000 l/s), and existing and potential hydropower generating stations were incorporated in the model. The potential irrigation areas are shown on Figure I-3. The simulation studies of the integrated operation of all the reservoirs, transbasin diversions, diversions for irrigation and M & I water demands, and of the hydropower plants in the model, were done by computer application.

The study was originally started in May 1979 to prepare an integrated development plan for the Tuntang and the Jragung River Subbasins. The scope of the study was subsequently enlarged, in December 1979, to include all subbasins into a conceptual development plan for the entire Jratunseluna Basin. The conclusions drawn from the study and the recommendations made by the Consultant are summarized in the following.

CONCLUSIONS

1. The development of individual subbasins and the integrated development of all subbasins in the Jratunseluna Basin were studied in accordance with the special conditions specified by the Directorate General of Water Resources Development. These special conditions are:

   a. Large projects should not be proposed for implementations in the Jratunseluna Basin during the near-term (10 years) period; however, development of irrigation and municipal water supply within the basin should begin in the near future for which only small-size, low-cost projects should be considered.

b. Hydropower development in the basin has low priority. Generation at existing power plants should not be reduced significantly.

2. In view of the special conditions stated in (1) above, the Consultant identified small-size, low-cost projects which are technically and economically feasible and which can be recommended for early implementation. These small-size development projects have the potential to become a part of the scheme for the overall development of the total basin.

The status of these small-size projects in the overall development plan was also examined for the case that the abovementioned constraints would be removed.

3. The updated development plan is presented in three alternatives. Out of thirteen individual projects identified in the Jratunseluna Basin, ten are compatible with the alternative development plans proposed. The projects are: 1) Raising of Rawa Pening, 2) Gunung Wulan Dam, 3) Tuntang - Jragung Transbasin Diversion, 4) Glapan Barrage , 5) Dolok Dam, 6) Jragung Dam, 7) Kedungombo Dam, 8) Ngemplak Dam, 9) Banjarejo Dam, and 10) Mid Lusi Diversion Structure. A design report for these structures is given in Appendix C.

All of these projects were analyzed individually and are technically feasible with the exceptions stated in paragraph (4). The salient features of the projects are tabulated below.

Project	Live Storage Capacity (10^6 m^3)	Project Cost (US $ 10^6)	Benefits 1/ Irrigation 95% Firmness (ha)	M & I Water Supply (l/s)	Annual Value (US $)	IRR (%)
1. Raising of Rawa Pening	125	31.01	14,204	1,500	12.98	21.5
	175	43.96	18,060	1,500	17.98	21.0
2. Gunung Wulan Dam	190	130.38	23,375	2,000	30.27	14.1
3. Tuntang-Jragung Transbasin Diversion	-	2.40	(In conjunction with Projects 1, 2 and 4)			
4. Glapan Barrage	87	32.77	13,517	1,500	12.15	20.8
5. Dolok Dam	35	15.73	996	500	2.93	11.3
6. Jragung Dam	75	71.39	8,200	1,500	15.63	13.8
7. Kedungombo Dam 2/	655	207.2	44,500	-	39.90	14.1
8. Ngemplak Dam	68	18.79	2,880	-	4.58	14.0
9. Banjarejo Dam	77	48.29	8,356	-	13.28	16.1
10. Mid Lusi Diversion Structure	-	3.3	(In conjunction with Projects 8 and 9)			

1/ At full development. 2/ December 1978 Analysis by SMEC [11].

The planning reports and the economic analyses for the above listed projects are given in Appendices D and E, respectively.

4. The individual small, low-cost projects which are recommended for detailed study and early implementation are listed as follows.

a. Raising of Rawa Pening

This project, for the different storage capacities analyzed, is very attractive economically. However, certain technical and sociological problems need to be investigated and resolved before embarking upon the final design and construction of the works. These problems are identified as follows.

(i) For raising the level and the storage capacity of the lake, dikes are proposed to protect the adjoining agricultural lands and urban and rural areas from flooding. The results of limited exploration and material testing show that the foundations for the dikes are weak and susceptible to large settlements.

(ii) The disposal of drainage by gravity from behind the levees appears to be problematic. Because of lack of adequate maps for the area, a workable drainage system could not be proposed. It is known however, that all areas behind the dikes cannot be drained by gravity, and that pumped drainage might be required.

(iii) If Rawa Pening is raised without dikes, large tracts of valuable agricultural lands and 17 villages around the lake will be flooded. More than fifty thousand people will be directly or indirectly affected by the raising of the lake. The sociological problems associated with large scale relocations may be prohibitive.

The storage at Rawa Pening is very attractive and should be exploited to the extent possible. Therefore, three alternative plans were studied for the following conditions:

- Live Storage Capacity increased by diking to 125 million cubic meters. This is the optimum size of storage at Rawa Pening. (See Appendix D - Part I).
- Live Storage Capacity increased to 175 million cubic meters without dikes. This will flood all agricultural lands and populated area around the lake.
- Live Storage Capacity maintained at 43 million cubic meters, the existing capacity of the lake.

(iv) It is felt that the sucessful implementation of raising Rawa Pening is dependent on resolution of the dispute which arose from damage claims filed after the previous increase of the

water level in 1966. Without a settlement of that dispute the project will not receive support from the local population. As Rawa Pening is a key element in development of the western subbasins, whose implementation affects selection and sizing of other projects and their priority in the development program, an early resolution of the conflict of interests is necessary. Based on strictly engineering and economic considerations the raising of Rawa Pening is recommended.

b. Dolok Dam

Constructing a dam and storage reservoir on the Dolok River is an attractive project. This project can supply 500 liters per second of municipal and industrial water to the low-lying eastern part of the city of Semarang and also provide perennial irrigation water to the upper 996 hectares of the present Dolok Service Area. It appears that the balance of the service area could be served from the Jragung Diversion after full development on the west side of the Jratunseluna Basin. However, for interim development, assured water for two crops per year could be supplied to the entire Dolok Service Area, in lieu of the perennial irrigation water supply to the upper 996 hectares, the 500 liters per second M & I water supply to the city of Semarang remains the same. If M & I water supply is increased to 750 liters per second, the corresponding service area for perennial irrigation will decrease to 650 hectares.

The reservoir created by this project will flood forest plantations. The economic implications have not been investigated as yet. The fact that this reservoir area has very few inhabitants, eliminates most of the sociological problems associated with storage reservoirs in almost all other projects in the development plan.

c. Glapan Barrage

The barrage at the originally proposed site for the Glapan Dam should be constructed for a full supply level at El. 30.0 M.S.L. with a live storage capacity of 87 million cubic meters. This capacity out of the initial gross capacity of 125 million cubic meters can only be maintained throughout the 50-year life of the project if all wet season flows with high sediment concentrations are passed through the barrage from October 1 to March 31 every year.

d. Tuntang-Jragung Transbasin Diversion

Withdrawing water from the Muncul Spring for M & I water supply would reduce water available in Rawa Pening for hydropower generation at the existing Upper Tuntang System (Jelok and Timo power plants) and at the potential third power plant at Sambirejo. Diversion of

M & I water at a point below the power plants would not result in power losses. Therefore, diversion of Tuntang water for M & I water demands in the city of Semarang, and augmenting Jragung River flows for irrigation in the western subbasins is proposed at a point below the potential third power plant of the UTS. This diversion is an important component in any scheme in which raising of Rawa Pening is planned. The economic evaluation of this diversion scheme should include a comparison of the energy lost in the UTS with the energy required for pumping and water treatment which would not be needed if the Muncul Spring water was fed directly into the Semarang distribution system.

e. Lusi River Development

Development of perennial irrigation of about 13,800 hectares along both the right bank and the left banks of the Lusi River above its confluence with the Serang River appears attractive and should be pursued. The components of this development are:

(i) A diversion at Mid Lusi can provide wet season irrigation to areas both on the left and the right banks of the river. The areas which can be served, without significantly reducing existing wet season use of Lusi River water at Wilalung, are 4,200 hectares on the left bank and 7,000 hectares on the right bank.

(ii) The construction of Ngemplak Dam, with or without Kedungwaru Dam, may be considered for early implementation as it has insignificant effects on the present downstream use of Lusi waters at the Wilalung Diversion for the Lower Sedadi areas. Ngemplak is especially attractive because of its ability to serve the upper 1,680 hectares of the South Grobogan Service Area which are presently planned for pumped irrigation in the Serang River Project. The Ngemplak Dam Project, without Mid Lusi Diversion, can provide perennial water to 2,880 hectares of potential irrigation service areas.

Mid Lusi Diversion flows in conjunction with the Ngemplak Reservoir could supply perennial irrigation water to 2,520 hectares in the Lusi Left Service Area, in addition to 1,680 hectares in the South Grobogan Area, even if no other storage is provided on the Upper Lusi and its tributaries. However, in that case no water will be available for diversion to the Lusi Right Service Area.

As indicated in the overall development plan, an area of 5,700 hectares on the Lusi Right Bank can eventually be supplied with perennial irrigation water from the Mid Lusi Diversion at full development, i.e. after storage at Banjarejo has been provided.

An alternative scheme for Lusi River development is to combine Banjarejo Dam with Mid Lusi Diversion without Ngemplak Dam. This

case is shown as Project No. 9 in the preceding paragraph (3).

The irrigated area on the Lusi Right Bank could be increased by providing additional storage on the Lusi tributaries at the possible damsites, namely Kedungwaru, Tirto and Bandungharjo. In the present study construction of dams, as individual projects, at these site was not found feasible.

The estimated costs and economics of small projects proposed above for early implementation are given in the preceding paragraph (3).

5. The Jragung Dam Project designed to pass sediment during a part of the wet season is technically feasible but economically marginal if used for irrigation only. This project can be justified as an element in the overall development of the Jratunseluna Basin if Rawa Pening cannot be raised due to technical and/or sociological reasons.

6. A storage dam on the Penggaron River was proposed in the original Development Plan of 1973. The present study found that the Penggaron project should be eliminated from the development plan due to the following reasons.

   a. Marginal site geological conditions.

   b. Sediment yield of the watershed is high. If the reservoir is operated for passing sediment through the reservoir during the wet season, it will greatly reduce reservoir effectiveness.

   c. More than half (342 hectares) of the reservoir area is presently used for irrigated rice production.

   d. Reservoir area is highly populated. Villages occupy about 125 hectares of the area. Evacuation and resettlement would be required.

   e. Anticipated costs of the project are very high in comparison to the anticipated benefits.

7. The integrated use of the waters of the western subbasins, namely Tuntang-Jragung-Dolok-Penggaron, and the eastern subbasins, namely Lusi and Serang has been studied. Due to lack of viable storage sites in the western subbasins for meeting projected needs for irrigation and demands for M & I water, the diversion of water from the Tuntang to the Serang-Lusi Rivers is not desirable. It has been found also that periods of high demand and of irrigation shortages coincide in both subbasins, which makes diversion of water from the Serang to cover Tuntang-Jragung shortages ineffective. Therefore, the development on the Lusi-Serang System and the Tuntang-Jragung-Penggaron-Dolok System have been considered independently in this study.

8. In the previous study done by SMEC for the development of the Serang River System, the cropping pattern used for the irrigation service area of the Kedungombo Project was two rice crops and one upland crop every year. In updating the development plan, it has been found that by adopting a cropping pattern of three crops of rice in 75 percent of the irrigated area in the Serang-Lusi System, similar to the cropping pattern in the Tuntang-Jragung System, the irrigation service area will not be decreased, provided that the Kedungombo releases are governed by irrigation demands only.

9. The updated Jratunseluna Basin Development Plan is presented in three alternatives shown in Tables VII-1, VII-2 and VII-3.

   Due to reasons stated in the preceding paragraph (4) of this chapter, the development plan for Rawa Pening is not yet finalized. As a key project in the overall basin development, this unknown factor necessitated the development of possible alternative schemes. The alternative schemes for the proposed Development Plan, therefore, are based on the three cases proposed for the Rawa Pening development listed in Paragraph 4.a. (iii).

10. It is possible to transform certain rainfed areas along the Lusi and the Serang River to wet season irrigation by diverting run-of-river regulated water supplies at appropriate locations on those rivers. Those rainfed areas fall in the following two categories.

    - The rainfed areas which are included for full development to perennial irrigation in the updated development plan. It is proposed that by constructing diversion structures 1) near Talun on the Peganjing River for the Upper South Grobogan Area (1,680 ha); and a part of Lusi Left Area (1,200 ha); 2) at Mid Lusi for areas on the Lusi Left (3,000 ha) and Lusi Right (7,000 ha); and by installing technical irrigation system in the Juana Valley (6,160 ha), a total of 19,040 hectares of the presently rainfed/non-technical irrigation areas should be provided with technical irrigation, as an interim measure for development.
      A part (1,500 ha) of South Grobogan Area originally proposed for development from the Serang River may also be included in this category for wet season irrigation by diverting run-of-river supplies from the Glugu River.

    - The rainfed areas along the Lusi River for which water is available by run-of-river diversion from the main river, under conditions explained in Section VII.4. of the main report may be provided technical irrigation. Since feasible storage sites for these areas have not been found on the Lusi River System, these are not included in the updated development plan for perennial irrigation; however, these areas may be developed to receive only wet season technical irrigation in the future.

11. Municipal and Industrial (M & I) water supply to the city of Semarang can be supplied from the Muncul Spring up to maximum of 2,000 liters per second if storage is provided on the Tuntang River or at Rawa Pening. The amounts of withdrawal for M & I and the corresponding irrigation areas, for different combinations of projects, are given below.

Element	Volume Diverted from Muncul (l/s)	Irrigated Area (ha)
Rawa Pening Storage Capacity 125 x 10^6 m^3 (F.S.L. El. 467.0 M.S.L.)	500	15,500
	1,000	14,700
	1,500	14,204
Glapan Barrage	500	15,200
	1,000	14,500
	1,500	13,800
Gunung Wulan Dam	2,000	23,775

If 500 liters per second of water are diverted from Muncul without providing adequate storage on the Tuntang River, the area presently receiving year-round irrigation at Glapan will be reduced by about 800 hectares.

12. A total of 4,000 liters per second of water for M & I demands in Semarang can be provided from the surface waters of the Jratunseluna Basin if and when the full development plan is implemented. Proposed schedules fitting a 20-year developing period are shown in Tables VII-1, VII-2 and VII-3.

13. The results of a brief study to evaluate flood and drainage problems in the Tuntang-Jragung Service Area, are reported in Special Report III [9]. The report establishes that flood and drainage control measures will be needed with and without storage dams on the Tuntang and the Jragung Rivers. A similar study should be carried out for the Dolok and Penggaron Rivers as well.

On the Lusi-Serang system, SMEC has proposed a scheme of flood control works including drainage improvements in the Juana Valley.

Interim flood control measures may be taken to alleviate flood damages in the affected areas; however a full scale flood control plan must await decisions on whether storage reservoirs will be constructed in the upper reaches of the basins. Upstream storage will have an important bearing on the flooding conditions of the lower plains.

14. The data and information used in the study for updating the Development Plan were obtained from the previous studies done by NEDECO and

SMEC. Hydrological data and data on irrigation and agriculture, as updated in this study, are given in Appendices B and C, respectively.

15. A brief reference is made by NEDECO in the original development plan for the Jratunseluna Basin of prospects for developing water resources of the Rivers Gelis, Mayong, Pucang and Lagung which drain the southern slopes of the Gunung Muria. The possibility of creating storage dams on these rivers at assumed locations is indicated.

The scope of work for the present study is to prepare a conceptual plan for the development of the Tuntang and the related subbasins of the Jratunseluna Basin. Inasmuch as no data are available for the Gunung Muria area and the integration of the water resources of the area with the subbasins of the Tuntang and the related rivers does not appear possible, the potential for developing water resources on the Muria slopes was not studied.

The topography of the area suggests that a collection system could be developed for conveying water to rivers with potential storage sites and that diversion structures and irrigation systems could be developed for improving agriculture practices in the area. It is suggested that a study be initiated to confirm the potential and evaluate the technical feasibility of the development envisioned by NEDECO for the Gunung Muria area.

RECOMMENDATIONS

1. In order to carry out feasibility studies and prepare designs for the small-size projects proposed for implementation in the updated development plan, it is important that accurate and detailed maps of all project-related areas and complete hydrological data are available to the engineers. The non-availability of this vital information and data could lead to inordinate delays, and may adversely affect the quality of the study.

   Unfortunately, neither the topographic maps nor the up-to-date hydrological data are available for any of the sites proposed for the first stage development. It is imperative that preparation of topographic maps and collection of hydrological data be started by the DGWRD forthwith and completed within a period of one year as scheduled in the updated development plan. Further, it is recommended that mapping and collection of data should be done under the guidance and supervision of qualified and experienced engineers.

2. For all projects proposed for early implementation, foundation investigations at the damsites and at locations of the related works, and exploration and testing of construction materials should be initiated by the DGWRD. These include the test embankments for the proposed Rawa Pening dikes. Although full scale investigations and explorations will continue through the feasibility and preliminary design stages, the availability of basic data on foundations and materials will greatly facilitate expediting the feasibility studies and final designs of the proposed works.

   It is recommended that an experienced geologist or geotechnical engineer should carry out field reconnaissance to determine the scope of geological investigations needed at each site and identify potential borrow areas and other sources of materials for the construction of dams and other projects. From these field reconnaissances an investigation and exploration program can be developed.

3. Optimum development of the water resources of the basin would require that large size multiple purpose projects, e.g., Kedungombo Dam and Gunung Wulan Dam should be phased early in the Development Plan to derive maximum benefits in the basin. However, the priorities for implementing the proposed updated development plan were fixed in accordance with the directions of the DGWRD to give preference to low-cost small storage projects over large dams during the next 10 years or so. The priorities thus established are in the following order.

   Rawa Pening

   Dolok Dam

   Mid Lusi Diversion

   Glapan Barrage

It is recommended that implementation of the development plan should be started in accordance with the schedules shown in Tables VII-1, VII-2 and VII-3, and for interim development in accordance with the schedule given in Table VII-4.

4. The small-size works proposed for early implementation in the updated development plan have been tested for economic feasibility at the preliminary level of study. It is recommended that full scale feasibility studies of the projects listed in paragraph (3) should be started in the same order of priority as given therein. This should be followed by carrying out feasibility studies of remaining projects proposed in the development plan. If results obtained from the proposed investigations for foundations and materials support the projects as presented in this report, the feasibility studies should proceed into the preparation of final designs as scheduled in Tables VII-1, VII-2 and VII-3. Therefore, the scope of work for the next stage of the study should include preparation of final designs, after the economic feasibility of any project has been established and accepted by the prospective funding agency.

5. In carrying out the feasibility study of the Rawa Pening Project, it is important that PLN should be closely associated with the study. The diversion of water from Muncul Spring for M & I water supply to Semarang will significantly alter the present schedules of the PLN for hydropower generation in the UTS and will also reduce energy production. A possible alternative is to route Muncul water through Rawa Pening to the power plants of UTS and the Tuntang-Jragung Transbasin Diversion and then divert it for M & I supply at Jragung. From there, water will be pumped to the treatment plant and storage at the city of Semarang. This arrangement, although not ensuring the existing power generation schedules of PLN, may eliminate energy losses in the UTS. However, for pumping water from the Jragung Diversion to Semarang additional power will be needed. It should be noted that by diverting water from Muncul, no pumping and probably no treatment will be required; on the contrary, the gravity flow from Muncul to Semarang may have some power generating potential which should be investigated in the feasibility study.

   Inasmuch as the point of diversion of the M & I water is a key factor in the projected operation of Rawa Pening, and will affect existing power generation schedules, any operation scheme adopted in the feasibility study for storage and diversion of water should have the concurrence of the PLN.

6. For some of the structures appurtenant to the proposed projects, the final design should be based on the results of hydraulic model tests. These structures are the Glapan Barrage, Mid Lusi Diversion structure and the spillway for the Dolok Dam. Soon after conceptual designs of these structures have been prepared during the feasibility studies, arrangements should be made to carry out model tests in the laboratory so that hydraulic designs are supported by model performance at the time of preparation of final drawings.

TABLE VI-1

JRATUNSELUNA BASIN UPDATED DEVELOPMENT PLAN

OPTIMIZATION STUDY - INDIVIDUAL ELEMENTS

Plan Element	Live Storage Capacity (10^6 m^3)	Irrigated Area 95% Firmness (ha)	M & I Water Supply (l/s)	Annual Energy Generated UTS (GWh)	Annual Energy Generated Local (GWh)	Project Cost ($x10^6$)	Annual Benefits ($ x 10^6) at Full Development: Irrigation	M & I	Power	Flood Control	Total	IRR (%)	Period of Construction	General Remarks
1. Rawa Pening 1/	100	11,640	1,500	143.0	-	23.69	7.93	3.72	-2.10	0		21.29	4	
	125	14,204	1,500	138.7	-	31.01	10.53	3.72	-2.265	0		21.47	4	
	175	18,060	1,500	127.5	-	43.96	16.00	3.72	-2.70	0		21.01	4	Note: Sociological Implications.
	200	19,640	1,500	119.5	-	-						-	-	23% reduction of power at UTS. Cost and benefits not evaluated
2. Glapan Barrage 1/	87	13,517	1,500	142.0	-	32.77	10.57	3.72	-2.14	0		20.80	4	
3. Gunung Wulan Dam 1/	190	23,375	2,000	134.0	61	130.38	24.43	4.96	- .07	.95		14.10	5	
	260	30,900	2,000	135.0	65	145.85	35.01	4.96	+ .12	.95		16.12	5	
4. Jragung Dam	75	8,200	1,500	161.0		71.39	11.53	3.72	-	.38		13.84	5	
5. Dolok Dam	35	1,950	-	-	-	16.00	2.74	-	-	.29		9.53	4	
	35	996	500	-	-	15.73	1.40	1.24	-	.29		11.28	4	
	35	650	750	-	-	15.57	0.91	1.86	-	.29		14.64	4	
6. Penggaron Dam	57	1,584	-	-	-	25.32	2.23	-	-	.67		6.53	4	Sediment bypassed
	57	1,056	500	-	-	25.15	1.48	1.24	-	.67		6.74	4	——— " ———
7. Bendungharjo Dam	22	1,333	-	-	-	12.84	2.12	-	-	0		11.18	4	
8. Ngemplak Dam	68	2,880	-	-	-	18.79	4.58	-	-	0		13.95	4	
9. Banjarejo Dam with Mid Lusi Diversion	77	8,356	-	-	-	48.29	13.28	-	-	0		16.08	4	
10. Kedungwaru Dam	19	1,333	-	-	-	17.95	2.12	-	-	0		8.02	4	
11. Kedungombo Dam 2/	655	44,500	-	-	-	207.2				0		14.10	5	

1/ Actual Area Benefited is 6,000 ha less than shown.
2/ December 1978 Analysis by SMEC [11].

TABLE VII-1

JRATUNSELUNA BASIN

UPDATED DEVELOPMENT PLAN

RAWA PENING RAISED TO LIVE STORAGE CAPACITY 125 x 10^6 m^3

Elements of Plan	Live Storage Capacity (10^6 m^3)	PROPOSED PERIOD OF IMPLEMENTATION (YEARS)																					Estimated Cost (US$ 10^6)	IRR (%)
		1981	1982	1983	1984	1985	1986	1987	1988	1989	1990	1991	1992	1993	1994	1995	1996	1997	1998	1999	2000	2001		
WESTERN SUBBASINS																								
Dolok Dam	35																						15.73	11.3
Jragung Dam	-																						-	-
Rawa Pening	125																						31.01	22.0
Tuntang-Jragung Trans-basin Diversion	-																						2.4	-
Gunung Wulan Dam	190																						130.38	14.1
Glapan Barrage	87																						32.77	20.1
EASTERN SUBBASINS																								
Kedungombo Dam	655																						208.00	14.1
Banjarejo Dam	77																						48.29	16.1
Mid Lusi Diversion	-																						3.3	-
Ngemplak Dam	68																						18.79	14.0
Yearly Cost	US$ 10^6	-	-	15.35	29.61	30.81	24.96	7.74	15.47	15.47	12.88	20.8	41.6	41.6	41.6	41.6	33.84	32.60	32.60	32.60	19.55	-		
Perennially Irrigated Area	ha	6,000						23,556				33,139						87,959				100,649		
M & I Water Supply	l/s	0						2,000				2,500										4,000		
Annual Benefits: Irrigation	US$ 10^6							5.23	10.47	15.70	20.93	28.97	32.28	35.31	38.34	41.37	41.37	51.95	63.14	74.33	85.52	116.01		
Annual Benefits: M & I Water Supply	US$ 10^6							2.1	2.7	3.3	3.9	4.5	5.10	5.70	6.20	6.20	6.20	6.20	6.20	6.20	6.20	9.92		
Annual Benefits: Flood Control	US$ 10^6							.29	.29	.29	.29	.29	.29	.29	.29	.29	.29	.29	.29	.29	.29	1.25		
Annual Benefits: Hydropower	US$ 10^6							-2.27	-2.27	-2.27	-2.27	-2.26	-2.26	-2.26	-2.26	-2.26	-2.26	-0.1	-0.1	-0.1	-0.1	2.34		
Annual Benefits: Total	US$ 10^6							5.35	11.19	17.02	22.85	31.50	35.41	39.04	42.57	45.60	45.60	58.34	69.53	80.72	91.91	129.52		

LEGEND
- Mapping
- Investigation
- Design/Construction

TABLE VII-2

JRATUNSELUNA BASIN

UPDATED DEVELOPMENT PLAN

RAWA PENING RAISED TO LIVE STORAGE CAPACITY 175 x 10^6 m^3

Elements of Plan	Live Storage Capacity (10^6 m^3)	1981	1982	1983	1984	1985	1986	1987	1988	1989	1990	1991	1992	1993	1994	1995	1996	1997	1998	1999	2000	2001	Estimated Cost (US$ 10^6)	IRR (%)
		PROPOSED PERIOD OF IMPLEMENTATION (YEARS)																						
WESTERN SUBBASINS																								
Dolok Dam	35																						15.73	11.3
Jragung Dam	-																						-	-
Rawa Pening	175																						43.96	21.0
Tuntang-Jragung Trans-basin Diversion	-																						2.4	-
Gunung Wulan Dam	175																						130.38	14.1
Glapan Barrage	87																						32.77	20.8
EASTERN SUBBASINS																								
Kedungombo Dam	655																						208.00	14.1
Banjarejo Dam	77																						48.29	16.1
Mid Lusi Diversion	-																						3.3	-
Ngemplak Dam	68																						18.79	14.0
Yearly Cost	US$ 10^6	-	-	10.05	26.25	34.70	30.61	19.81	15.47	15.47	12.88	20.8	41.6	41.6	41.6	41.6	33.84	32.60	32.60	32.60	19.55	-		
Perennially Irrigated Area	ha	6,000						19,400	27,756			37,339						92,159				103,006		
M & I Water Supply	l/s	0						2,000				2,500										4,000		
Annual Benefits: Irrigation	US$ 10^6							3.67	10.00	16.33	22.96	32.00	37.70	40.73	43.76	46.66	46.66	57.85	69.04	80.23	91.42	120.41		
Annual Benefits: M & I Water Supply	US$ 10^6							2.1	2.7	3.3	3.9	4.5	5.1	5.7	6.2	6.2	6.2	6.2	6.2	6.2	6.2	9.92		
Annual Benefits: Flood Control	US$ 10^6							.29	.29	.29	.29	.29	.29	.29	.29	.29	.29	.29	.29	.29	.29	1.24		
Annual Benefits: Hydropower	US$ 10^6							-2.69	-2.69	-2.69	-2.69	-2.84	-2.84	-2.84	-2.84	-2.84	-2.84	-.68	-.68	-.68	-.68	1.68		
Annual Benefits: Total	US$ 10^6							3.37	10.30	17.23	24.46	33.95	40.25	43.88	47.41	50.31	50.31	63.66	74.85	86.04	97.23	133.25		

LEGEND
- Mapping
- Investigation
- Design/Construction

TABLE VII-3

JRATUNSELUNA BASIN

UPDATED DEVELOPMENT PLAN

RAWA PENING NOT RAISED-EXISTING LIVE STORAGE CAPACITY 43 x 10^6 m^3

Elements of Plan	Live Storage Capacity (10^6 m^3)	1981	1982	1983	1984	1985	1986	1987	1988	1989	1990	1991	1992	1993	1994	1995	1996	1997	1998	1999	2000	2001	Estimated Cost (10^6 m^3)	IRR (%)
WESTERN SUBBASINS																								
Dolok Dam	35																						15.73	11.3
Jragung Dam	75																						71.39	13.8
Rawa Pening	43																							
Tuntang-Jragung Trans-basin Diversion	-																						2.4	-
Gunung Wulan Dam	190																						130.38	14.1
Glapan Barrage	87																						32.77	20.8
EASTERN SUBBASINS																								
Kedungombo Dam	655																						208.0	14.1
Banjarejo Dam	77																						48.29	16.1
Mid Lusi Diversion	-																						3.3	-
Ngemplak Dam	68																						18.79	14.0
Yearly Cost	US$ 10^6	-	-	8.38	22.89	30.14	26.61	22.03	23.49	23.49	23.74	11.9	20.8	41.6	41.6	41.6	41.6	40.36	39.11	39.11	32.60	-		
Perennially Irrigated Area	ha	6,000						14,513	22,869			25,749	33,949						88,769			99,327		
M & I Water Supply	l/s	0						2,000					3,500									4,000		
Annual Benefits: Irrigation	US$ 10^6							2.4	7.46	12.52	17.58	23.54	29.40	32.81	35.83	39.61	40.88	40.88	52.07	63.26	76.45	112.7		
Annual Benefits: M & I Water Supply	US$ 10^6							2.10	2.70	3.30	3.90	4.5	5.1	5.7	6.2	6.95	7.7	8.45	8.68	8.68	8.68	9.92		
Annual Benefits: Flood Control	US$ 10^6							.29	.29	.29	.29	.29	1.25	1.25	1.25	1.25	1.25	1.25	1.25	1.25	1.25	1.62		
Annual Benefits: Hydropower	US$ 10^6							-2.14	-2.14	-2.14	-2.14	-2.14	-1.71	-1.71	-1.71	-1.71	-1.71	-1.71	.45	.45	.45	1.10		
Annual Benefits: Total	US$ 10^6							2.65	8.31	13.97	19.63	26.19	34.04	38.05	41.57	46.10	48.12	48.87	62.45	73.64	86.83	125.3		

PROPOSED PERIOD OF IMPLEMENTATION (YEARS)

LEGEND
- Mapping
- Investigation
- Design/Construction

TABLE VII-4

JRATUNSELUNA BASIN DEVELOPMENT

INTERIM MEASURES - IMPLEMENTATION SCHEDULE

PROPOSED WORKS	PERIOD OF IMPLEMENTATION (YEARS)										Wet Season Irrigation Area (ha)	Estimated Cost ($ 10^6)	REMARKS
	1981	1982	1983	1984	1985	1986	1987	1988	1989	1990			
1. SOUTH GROBOGAN IRRIGATION SYSTEM													
a. From Glugu River Diversion											1,500	2.5	Preliminary economic analyses of all these projects gave internal rates of return of more than 15 percent. These should be checked in the feasibility studies recommended of these projects.
Mapping - Investigation													
River Diversion Works													
Design													
Construction													
Irrigation System													
Design													
Construction													
b. From Peganjing River Diversion											2,880	4.5	
Mapping - Investigation													
River Diversion Works													
Design													
Construction													
Irrigation System													
Design													
Construction													
2. MID LUSI IRRIGATION SYSTEM											10,000	15.0	
Mapping - Investigation													
River Diversion Works													
Design													
Construction													
Irrigation System													
Design													
Construction													
3. JUANA IRRIGATION SYSTEM											6,160	9.0	
Mapping - Investigation													
River Diversion Works													
Design													
Construction													
Irrigation System													
Design													
Construction													
4. UPPER LUSI IRRIGATION SYSTEM												Not yet Determined	
Mapping - Investigation													
Design													
Construction													

BIBLIOGRAPHY

BIBLIOGRAPHY

No.	Title
1	NEDECO. Jratunseluna Basin Development Plan, Main Report, Conclusions & Recommendations. November 1973.
2	NEDECO. Jratunseluna Basin Development Project, Feasibility Study, Water Resources Development, Jragung, Dolok and Penggaron Basin, Vol. 1 : Report. December 1971.
3	NEDECO. Jragung Dam Flood Control and Irrigation Project, Feasibility Study. August 1973.
4	PRC/ECI. Jragung Dam Multipurpose Irrigation Flood Control and Industrial Water Supply Project, Upgraded Feasibility Report. December 1976.
5	PRC/ECI. Jragung Dam Final Design Report. April 1979.
6	NEDECO. Jratunseluna Basin Development Plan Central Java, Glapan Dam, Irrigation, Flood Control and Hydropower Project. July 1975.
7	NEDECO. Jratunseluna Basin Development Plan, Central Java, Ngrambat Dam. June 1975.
8	NEDECO. Jratunseluna Basin Development Project, Prefeasibility Study, Rawa Pening. 1972.
9	PRC/ECI. Tuntang/Jragung Rivers Basins Integrated Development Plan. Executive Summary, Appendices and Special Reports I, II and III.
10	BURNS AND MCDONNELLS/TRANS-ASIA. Water Supply Master Plan for the city of Semarang. November 1976.
11	SMEC. The Improvement and Development of the Serang River and Irrigation Project, Central Java, Definite Scheme Report. February 1979.
12	SMEC. The Improvement and Development of the Serang River and Irrigation Project, Central Java, South Grobogan Irrigation Project, Feasibility Study, Technical report. June 1978.
13	SMEC. The Improvement and Development of the Serang River and Irrigation Project, Central Java, Juana Valley Irrigation Project, Feasibility Study, Technical Report. February 1980.
14	NEDECO. Consequences of the Postponement of the Jragung Dam. July 1979.
15	PRC/ECI. Tuntang/Jragung Rivers Basins Integrated Development Plan, Interim Report. August 1979.