BIBLIOGRAPHIC DATA SHEET

1. CONTROL NUMBER	2. SUBJECT CLASSIFICATION (695)
PN-AAJ-292	TC00-0000-0000

3. TITLE AND SUBTITLE (240)

Solar cookers: test results and new designs

4. PERSONAL AUTHORS (100)

Bowman, T. E.

5. CORPORATE AUTHORS (101)

Fla. Inst. of Technology. Ctr. for Research on Energy Alternatives

6. DOCUMENT DATE (110)	7. NUMBER OF PAGES (120)	8. ARC NUMBER (170)
1978	30p.	621.47.B787

9. REFERENCE ORGANIZATION (130)

FIT

10. SUPPLEMENTARY NOTES (500)

(Prepared for presentation at the Second International Symposium of Engineering, "Technology Appropriate to Underdeveloped Countries," San Salvador, 1979)

11. ABSTRACT (950)

12. DESCRIPTORS (920)

Solar energy
Design criteria
Cooking devices
Evaluation

13. PROJECT NUMBER (150)

931023400

14. CONTRACT NO.(140)

AID/ta-C-1333

15. CONTRACT TYPE (140)

16. TYPE OF DOCUMENT (160)

AID 590-7 (10-79)

SOLAR COOKERS: TEST RESULTS AND NEW DESIGNS

by

Thomas E. Bowman, Ph.D., P.E.
Center for Research on Energy Alternatives
Florida Institute of Technology
Melbourne, Florida 32901, U.S.A.

1 December 1978

Preprint of a paper to be presented at the
Second International Symposium of Engineering
"Technology Appropriate to Underdeveloped Countries
19-23 February 1979
Universidad José Simeón Cañas
San Salvador, El Salvador, C.A.

SOLAR COOKERS: TEST RESULTS AND NEW DESIGNS

by

Thomas E. Bowman, Ph.D., P.E.

Center for Research on Energy Alternatives

Florida Institute of Technology

Melbourne, Florida 32901, U.S.A.

1 December 1978

ABSTRACT

A program to design, fabricate, test, and evaluate solar cookers was carried out, with the primary objective being suitability as the primary means of cooking for rural families in underdeveloped areas. Factors considered in the evaluation included time to boil one to three liters of water, maximum temperatures of vegetable oil, energy storage, capacity, versatility, ease of use, ease of maintenance, durability, wind stability, portability, materials cost, and ease of manufacture.

Cookers tested to date include four Telkes ovens, two Adams cookers, three direct-focusing cookers, two steam cookers, and three combined focusing/oven cookers. Many were designed by us, but others were modifications or copies of earlier designs; some were purchased. Our overall conclusion has been that the various oven types (Telkes, Adams, and combined focusing/oven), if designed well, are easy to use, versatile, and maintenance-free as well as being effective, and that these characteristics render them the only solar cookers having a high potential for widespread use in underdeveloped areas. The much lower first cost of most direct-focusing cookers is achieved by using relatively delicate, perishable reflective surfaces that must be replaced periodically, resulting in a supply problem directly comparable to fuel-burning stoves, which are easier to use and probably also more economical than this type of solar cooker.

In addition to the test results, some design criteria for Telkes ovens are presented, as well as three new designs for combined focusing/oven cookers, two of which have been built and tested. The highest-performance example yields 700 F°(370 C) oven temperatures, and can heat 1.1 kg of eutectic lead/tin alloy from ambient to the melting point (361°F) in 20 minutes, and from the melting point to 600°F (315 C) in 27-32 minutes.

I. INTRODUCTION

The availability of fuel for cooking food has become a major problem in many of the world's equatorial regions, and it is a problem that is both growing and spawning other serious problems. Where the traditional fuel source is charcoal prepared from native trees and bushes, the relentless increase in charcoal production has resulted in deforestation with its attendant problems of erosion and climate change. Agricultural land is lost and more and more time and energy are spent in the search for fuel for cooking. The ultimate result is an impact on not just the environment and ecology, but on the economic, demographic, nutritional, sanitation, health and other aspects of the society affected.

Kerosene, gasoline, or liquefied petroleum gas can be used as a replacement for charcoal, and stoves designed for these fuels can be manufactured at relatively low cost, and with good durability, reliability, and portability. The major problem associated with introduction of these devices in an underdeveloped country is the fuel distribution system that must be established and maintained if fuel is to be made available in remote areas, to a scattered populace, on a routine basis. Another problem in most underdeveloped countries is the fact that the fuel must be imported and will be a continuing foreign exchange burden for as long as such stoves are in use.

A particular irony is the fact that these problems are most intense in regions where solar energy is most abundant - typically greater than 700 kJ/cm^2 annually, compared to about 500 for most of the major population centers in the U.S., and less than 400 throughout most of Northern Europe. The strength and persistence of the solar load is in fact probably an important factor in the deforestation problem, causing the former forest floor to rapidly dry to a hard, impervious, masonrylike surface not at all conducive to new growth. The obvious solution would seem to be to put the sun to work as the primary heat source for cooking, rather than using combustion heat sources with their high societal burdens, direct and indirect.

For these reasons, solar cookers have been suggested with increasing frequency in the past few years as a near-ideal solution to the food preparation problem in underdeveloped countries, and in fact significant programs to introduce solar cookers in equatorial regions have been carried out during the past twenty years. To date, however, none of these efforts has achieved any degree of longterm success. Among the objectives of our study was the determination of why solar cookers, which have been used successfully for at least a hundred years, have never succeeded in displacing traditional fuels for any known group of people on a continuing basis.

Our conclusion, based on work reported at greater length in References 1 and 2, was that all effective solar cookers seem to be characterized by either a high initial cost or a high operating cost, and further more that many of those designed to date have tended to be awkward and difficult to use, limited as to the kinds of cooking possible,

unstable in strong (or even moderate) winds, and often very limited in terms of the size pot or quantity of food that can be efficiently heated.

High operating cost is perhaps a surprise, since the heat source itself is limitless and free. A common characteristic, however, of effective, low-cost cookers is reliance on reflective films or foils which must be replaced at frequent intervals. New reflective material and adhesive represent an operating cost just as surely as kerosene fuel would. Without reliable data on either costs at the point of use, or quantities consumed in typical usage, for either reflective film or kerosene, we were not able to quantitatively compare the operating costs. However, the cost of replacing the reflective surface of a solar cooker is not insignificant. The cheapest effective solar cooker we know of is the VITA cooker (see below) which uses 2916 in^2 (about $2m^2$) of aluminized Mylar. The current selling price of aluminized Mylar in the U.S. ranges from $\$3.88/ft^2$ ($\$41.77/m^2$) in 250 ft^2 ($25m^2$) quantities down to $\$0.16/ft^2$ ($\$1.72/m^2$) in quantities greater than 25,000 ft^2 ($2500m^2$). A more recently-introduced alternative, self-adhesive "Scotchcal" reflective acrylic film, is sold by the manufacturer at $360 per 300 ft^2 ($28m^2$) roll, a quantity sufficient for 15 VITA cookers at a price of $24 per cooker - about the price of 50 gallons (190 liters) of kerosene. Even if this cost were much less than the operating cost of a kerosene stove, the fact that a system of supply for Mylar and adhesive or Scotchcal would have to be established, with trained technicians to refurbish the reflectors, would tend to negate the solar cooker's advantages relative to the kerosene stove. From the point of view of the user, a kerosene stove has one very significant advantage over any solar cooker - the fact that using it requires neither significant effort nor concern about the weather. If a solar cooker cannot counter this advantage with a near-total independence from external sources of consumable materials, we concluded that its chances for acceptance would be small indeed.

For these reasons, we have concentrated our efforts on cooker designs that do not rely on replacement of materials, in spite of the much higher first cost that results when it is necessary either to fabricate curved reflectors that will have long (many years) lifetimes, or to design around the use of plane reflectors only. The goal has been to offset the high cost by evolving designs that would be so versatile and effective as to allow use by larger numbers of people per cooker, and also to encourage use by preference. In particular, a design that features a large, high temperature oven should have potential advantages for the cook, compared to cooking over a fire, that will outweigh the disadvantage of having to follow the sun. The following sections describe some of our work with cookers of this type built to existing designs, and also some new designs that evolved as a result of our work with the existing cookers.

II. TYPES OF SOLAR COOKERS

Before presenting the results of our own work, a brief review of past work in this field is in order, and this review can be most effectively covered in terms of a categorization of the various solar cooker types.

First are the various direct-focusing cookers, which are based on the most obvious and direct means of solar cooking: using a parabolic reflector (or some approximation thereto) to focus sunlight on a cooking pot. Leading examples of the type have been:

1. The Wisconsin Model 3 cooker, which used a 48-inch (1.22m) diameter polystyrene shell lined with aluminized Mylar film. This cooker was designed at the University of Wisconsin in 1960, following some three or four years of field tests in Mexico with about 200 examples of earlier versions of the same cooker, sponsored by the Rockefeller Foundation. Model 3 apparently gave very satisfactory performance during the useful lifetime of the reflector, and would bring 2 liters of water to a boil in 30 to 60 minutes, depending on weather conditions (Ref. 3). However, its use in Mexico was apparently not continued after the University of Wisconsin team left.
2. A later version of the Wisconsin cooker designed for local manufacture in Teotitlán del Valle, Oaxaca, Mexico, with a shell built up using polyester resin, muslin, and burlap. Rather than using a reflective plastic film, small glass mirrors were glued to the front of the shell. Although the mirrors themselves were permanent, the adhesive was not, and the solar cookers were discarded as the mirrors fell off and performance became unacceptable (see Ref. 1).
3. A cooker developed in India in the early 1950's and put into commercial manufacture by two firms, with a 43 inch (1.09m) diameter spun aluminum reflector, polished and anodized. The most recent report on these cookers that we know of was in 1962 (Ref. 4), and our efforts to contact the principals or learn something of the current status or fate of these cookers came to naught. It seems to be generally accepted that these cookers did not remain in production for long, and are not known to be in current use. Khanna's 1962 paper reported heating 1 kg of mustard oil from ambient temperature to 398°F (203 C) in 50 minutes.
4. The Umbroiler, with a folding, umbrella-type reflector of 1.22m diameter, lined with aluminized Mylar. This cooker was sold in the U.S. at a price of $16 in the early 1960's, and reportedly several hundred were sold (Ref. 5). They are no longer available.
5. The Thew cooker, produced by Garrett Thew Studios of Westport, Conn., in the early 1960's. This cooker was somewhat smaller than the four preceding cookers, with a 0.89m diameter spun aluminum reflector, and consequently was limited to smaller quantities of food than would be suitable for a family (Ref. 6). It is no longer being produced.
6. The Tarcici cooker, which is still sold in France and Switzerland under the trade-name "Solnar". This is a collapsible cooker that has been sold primarily to backpackers and campers, throughout Europe and in other parts of the world, for many years. The reflector consists of 36 reflecting metal blades in two fan-shaped arrays, with a total area of approximately 1.0m^2. Retail price in New York a few years ago was $160. An example is on permanent display in New York's Museum of Modern Art.
7. The VITA Fresnel cooker, designed by a team of experts under the auspices of Volunteers for International Technical Assistance in the early 1960's (Ref. 6). This cooker was designed as a direct focusing cooker that could be easily and cheaply constructed by local artisans.

The Fresnel reflector consists of several concentric rings cut from a flat sheet of thin Masunite, with sectors removed and the ends rejoined to form conical segments. Outer diameter of the prototype reported on in Ref. 6 was 46 in. (1.17 m). The reflective surface was aluminized Mylar. Cost for materials, in the U.S. in the early 1960's was estimated to be $2.88 - a remarkably low figure for a cooker of this size. However, the Mylar and adhesive, which need frequent replacement, represented about 20% of the total cost. At November 1978 prices, 1/2-mil single-aluminized Mylar would cost from $3.24 per cooker in 1200-cooker quantities up to $78.57 per cooker in 12-cooker quantities, although a cheaper (and probably better for this purpose) film, Scotchcal, is available at $24.30 per cooker in 15-cooker quantities.

8. A multi-mirror cooker designed, built, and tested by Tabor in 1965 (Ref. 7). Reasoning that "rear-silvered glass is almost certainly the most permanent and brilliant commercial mirror surface known and is surprisingly cheap," Tabor designed a cooker using a paraboloidal array of twelve concave glass mirrors, each of 11.5 in. (29.2 cm) diameter. Total material cost (in 1965) was estimated to be about $8. By using an asymmetrical mirror system with horizontal axis of rotation at the center of curvature of the image field, rather than at the image as in other focusing cookers, performance was improved over earlier designs, and Tabor reported heating 1.84 liters of water from ambient to boiling in 22 minutes, in spite of having only about 70% as much reflector area as the Wisconsin cooker.

9. The "Sun Baskets" developed by Von Oppen of the International Crops Research Institute for the Semi-Arid Tropics, Hyderabad, India. The reflectors are papier mache, 1 cm thick by 1.4 m diameter, supported on the outside by a woven bamboo basket and lined with reflective foil. Material cost was estimated in 1976 to be 37 rupees (about $4). Von Oppen reports bringing one liter of water to a boil in 5 minutes, and preparing "full meals with six dishes for eight to ten persons . . . within about two to three hours cooking time."

The second type of solar cooker that has seen widespread use is the oven or box-type cooker, with sunlight entering the oven directly through one transparent (or translucent) wall, and also by reflection from plane mirrors through the same wall, or other translucent walls. The oven in essence traps the heat through a combination of the greenhouse effect and well-insulated rear and/or side walls. Two basic types have achieved notable success:

1. The Adams cooker, which was probably the "original" solar cooker. In a letter to the editor of Scientific American, published in the issue of June 15, 1878, W. Adams of Bombay, India, described a solar cooker he had built that had been used to cook "the rations of seven soldiers . . . in two hours, in January . . ." The oven was an octagonal enclosure, with the front surface and eight sides being glass and a black, insulated back surface. From the back surface a conical array of eight plane glass mirrors surrounded the glass enclosure, collecting sunlight and directing it into the enclosure. The span of the reflector rim was 28 in. (71 cm). A similar cooker is currently marketed

in the U.S. under the tradename "Solar Chef". Retail price in 1977 was about $150.

2. Telkes ovens, which are similar to the Adams cooker except that the reflectors surround the front surface rather than the back surface so that only one wall need be glass (or other translucent material) and the other walls can be well-insulated. Telkes has presented several different configurations (Ref. 8, 9), and an undetermined (large) number have been used in many parts of the world during the past twenty years. Telkes reported oven temperatures of 460°F (238 C) - a figure confirmed by our own work - and the FAO (Ref. 3) reported on a series of tests in Rome with a 2 ft^3 ($0.057m^3$) oven in which 2 liters of water were heated from ambient to boiling in 90-140 minutes, depending on the weather. Small Telkes ovens capable of cooking hamburgers and frankfurters are currently marketed in the U.S. at prices of approximately $35-$50.

A third type of solar cooker, and one we have been especially interested in, combines an oven box with a separate line-focus reflector that directs sunlight through a small window in the lower portion of the oven. This type promises to be less expensive than the Telkes oven (or Adams cooker) since both reflector and window can be smaller for given oven size, and the window need not be double glazed. It should also be more acceptable to the chef since the food is heated from below, rather than above, and use is somewhat easier. Like the other ovens, it is easier to use and more versatile than a direct-focusing cooker, and also does not require the large compound-curvature reflector of all the direct-focusing types except the VITA Fresnel cooker and Tabor's cooker. Principal examples are the following:

1. The "cylindro-parabolic" cooker built by Prata in Portugal in 1961 (and re-constructed by us in 1977) using two separately-adjusted parabolic reflectors below and behind a cylindrical oven (Ref. 10).
2. F.I.T. cooker no. 1, using a single parabolic reflector below a rectangular box oven and the optical principles delineated by Tabor (Ref. 7). This cooker is further described in Section IV below.
3. F.I.T. cookers 2 and 3, using fixed arrays of rotating plane glass reflectors below a rectangular or cylindrical oven, described further in Section VIII below.

The fourth type of solar cooker is the indirect-type cooker, where solar collector and cooker are separate, with energy transfer from collector to cooker via a working fluid (steam or vegetable oil, in the examples to date.) Chief examples of this type cooker have been the following:

1. A cooker with a horizontal, east-west finned pipe at the focus of a stationary circular-cylindrical reflector, connected at one end to a double-boiler cooker, built in St. James, Barbados, by Whillier of the Brace Research Institute in 1964 (Ref. 11). Water in the pipe boils, sending steam to the cooker. Aperture area of the reflector was 14 ft^2 ($1.3m^2$).
2. A later design by the Brace Research Institute consisting of a stationary flat plate solar collector inclined at 45°, with a double-boiler cooker mounted above the top. Steam from the collector rises to

the cooker, where some escapes and some condenses and runs back. Plans are available from the Brace Research Institute, and an installation of 20 units was made in Miragoane, Haiti. These cookers did not perform the intended function, however, and have mostly been dismantled; two were converted to a solar water heater, and the seven still in place are only used to warm water for dish-cleaning, etc. (Refs. 1, 2).

3. A design by Farber and Ingley at the University of Florida that includes a two-loop fluid system, phase-change material for energy storage, circulating pumps, and a linear parabolic reflector. The fluid in both loops is cottonseed oil (Ref. 12).

III. QUALITATIVE EVALUATIONS OF EXISTING DESIGNS

A number of solar cookers were either built or purchased by us and tested to such an extent that we felt we had at least a qualitative understanding of their operation and performance, prior to embarking on new designs and design modifications. In this category of existing designs were the following cookers:

1. A direct-focusing cooker that we built using a 48 inch (1.22 m) diameter back-silvered acrylic reflector, purchased commercially for $70 (reflector only). This reflector is the cheapest of its size that we know of currently being marketed in the U.S.
2. A direct-focusing cooker with a folding aluminum reflector about 36 inches (91 cm) in diameter that was purchased complete for $24 in 1976.
3. A direct-focusing cooker consisting of a foil-lined, parabolic shell made of styrofoam, focusing sunlight on a horizontal skewer. Total collection area is only about one square foot (0.1 m^2). The cooker was purchased commercially for $14 in 1976.
4. An Adams-type cooker, the "Solar Chef", purchased commercially in 1976 for $140 plus shipping.
5. The same "Solar Chef" with a larger glass enclosure (more closely resembling Adams' original cooker) and a swinging rack, and other modifications.
6. A Telkes oven with movable reflectors, built by us according to plans published by D.S. Halacy in a book called Fun with the Sun (Macmillan), and also in The Mother Earth News, January 1974.
7. The same Telkes oven with the movable reflectors replaced by a more usual Telkes-type reflector array.
8. The cylindro-parabolic cooker originally designed and built by Prata was reproduced by us using the drawings and photos he presented in 1961 (Ref. 10).
9. A solar steam cooker similar to those installed in Haiti was built, following plans purchased from the Brace Research Institute.

Of these cookers, numbers 1, 7, and 8 gave clearly the best performance, but all three were exceedingly difficult to use. The chief problem with number 1 was the fact that the focal length of this commercial reflector is too long (nearly two meters) for practical use as a cooker. Other problems were associated with the lack of stiffness of the reflector and the high wind loading on its large area. In number 7, the

oven is awkwardly shaped, access through the tiny rear door is very difficult, and tipping the oven about a horizontal axis is very difficult, especially with anything in the oven. Number 8 required full-time attention to keep the cooker facing the sun, reflectors aligned, and legs in a semi-stable position;wind stability was a problem, as was the high degree of independence of the various structural elements, lack of torsional stiffness of the reflectors, etc. Number one boiled one liter quantities of water in fifteen minutes or less, but we were never able to achieve a full boil with two liters of water, partly because both the target and focal region seemed always to be moving on any but the calmest of days. Number 7 heated a liter of water to boiling in about 45 minutes and a liter of cooking oil to 300°F (150 C) in the same time, and to 400° F (200 C) within two hours. Up to 3 liters of water could be boiled at one time. Number 8 heated one liter of water to boiling in 35 minutes, but was never tested extensively because it was so difficult to use, and the reflectors sustained some wind damage during the first tests.

Numbers 4 and 5 also gave acceptable results, and were much easier to use than any of the three cookers just described. Number 5 consistently heated one-liter quantities of water to the boiling point in 80 to 100 minutes - considerably longer than the first three. Number 4's performance was similar to number 5's, but the small enclosed volume and lack of a swinging rack greatly restricted what we could do with it.

Number 6, with movable reflectors, gave us endless problems. We devised various links, props, supports, etc. to try to hold the reflectors in place, with little success. Performance would probably be poorer than number 7 anyway because of the impossibility of incorporating corner reflectors.

Our experience with number 9 duplicated that of the intended Haitian users - we were not able to cook with it. Numbers 2 and 3 are both too small for practical cooking of significant quantities of food. Number 2 was nearly impossible to set up even in the laboratory, and outdoors the wind damaged the reflector on our first attempt to use it.

IV. F.I.T. COOKER NO. 1

The first of our new cooker designs was a development of the combined focusing reflector/insulated oven theme first explored by Prata. The chief flaw in Prata's design is the lack of structural integrity. Our "F.I.T. Cooker No. 1" is based on a very sturdy A-frame structure, as shown in Figure 1; the reflector is also structurally stiff. The oven box is rectangular, insulated on the back and ends and double glazed (fiberglass-reinforced polyester, FRP) on top. The lower surface includes a centeral, glazed window, the length of the oven, with insulated strips on either side of the glazed slit. The front surface is a door, fabricated by attaching translucent FRP sheets on either side of a wood frame, and hinged on one end. A rack rests on the insulation, above the bottom slit.

The parabolic reflector has its vertex near the rear edge, and

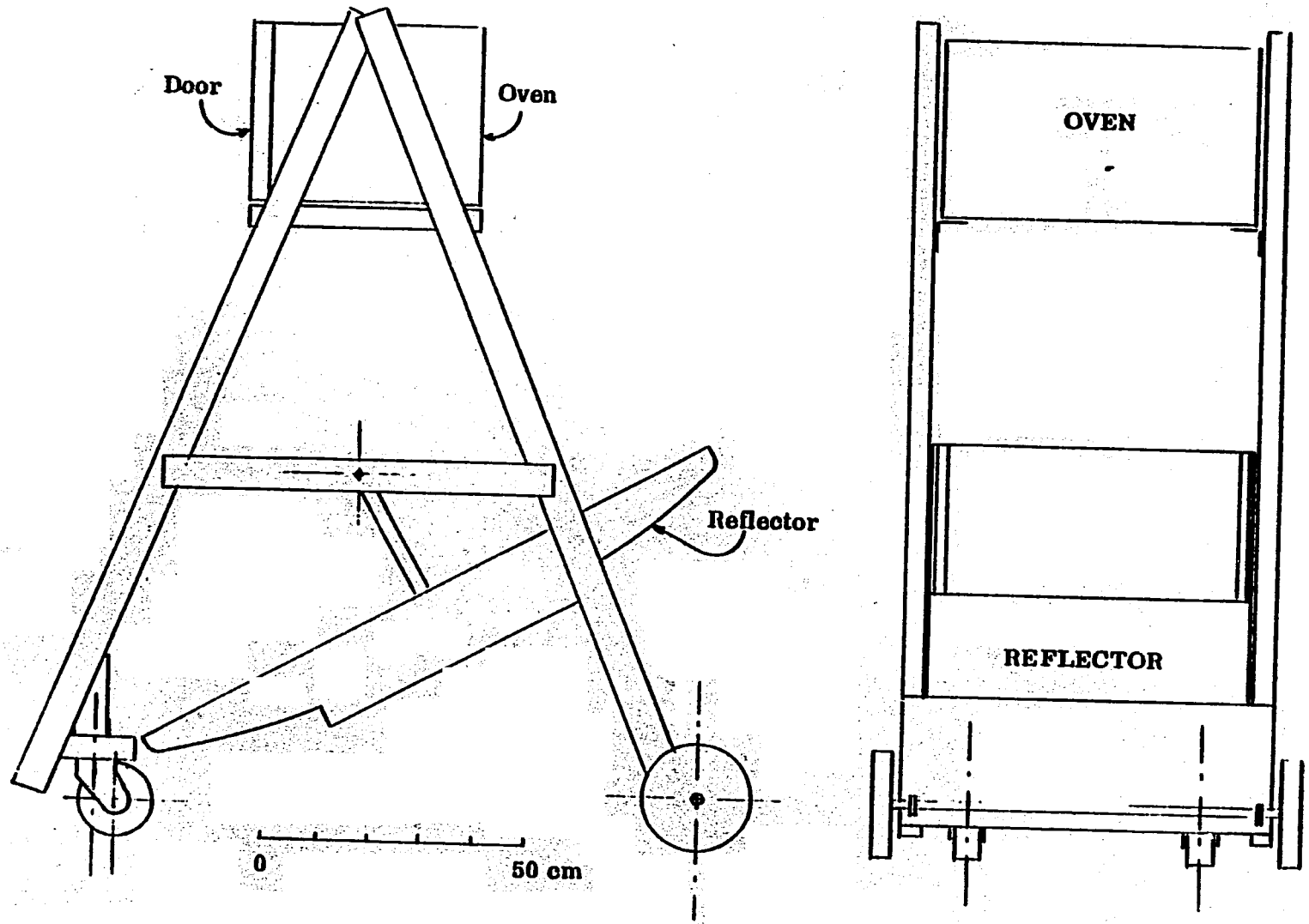

Figure 1. F.I.T. cooker number one, two views

is pivoted about the center of a circle passing through the ends of the parabola and the focal point, in accordance with Tabor's analysis of the optics of direct-focusing cookers. A reflector designed along these lines stays closer to the ground and more nearly below the oven window even at low sun angles, so that more of the sunlight strikes the window at nearly normal incidence than would be the case with a symmetric reflector or a higher pivot axis, as in Prata's design.

The entire cooker is on wheels, to allow easy rotation to follow the sun, and translation to escape shadows.

In operation, the entire cooker is periodically turned about a vertical axis to face the sun, while the reflector alone is tipped to follow changes in the sun's elevation. Proper reflector angle is indicated by the location of the bright focal line relative to the window, and is maintained by letting the reflector rest against an adjustable support rod. The reflector swings about its pivot axis at 2/3 the rate of change of the solar elevation. That is, relative to its position when the sun's elevation is 60° (the design point), the parabola is swung upward 20° when the sun is at 30°, and downward 20° when the sun is directly overhead. At the same time, the focus is compromised, being perfect only at the design point. The image spreading is small relative to the width of the window for solar elevations greater than about 20°.

The window is wide enough to allow discrete rather than continuous adjustment of the reflector. The reflector is typically adjusted to place the focal line at one edge of the window (back in the morning, front in the afternoon). As the sun rises or sets with the reflector stationary, the focal line, which is very bright and hence easily seen, moves across the window; when it reaches the far end, the reflector is adjusted to move the focus back to the original edge. Since the reflector pivot is vertically below the window, the focal line moves horizontally, parallel to the window. Adjustment is typically needed every 10-15 minutes.

V. HEATING RATE MEASUREMENTS: TWO TELKES OVENS, ADAMS COOKER, AND F.I.T. COOKER NO. 1

An extensive series of quantitative tests was carried out during late May, June, July, August, and early September 1977, using the Halacy version of the Telkes oven (but with fixed reflectors), a Telkes oven that we built out of Foamglas (a rigid, cellular insulation material used extensively for commercial and industrial purposes in the U.S.), our modified version of the Solar Chef, and the F.I.T. cooker described in the preceding section. The Foamglas Telkes oven had a slightly (15%) smaller window and reflector than the Telkes/Halacy oven, but considerably more usable oven volume and a much larger door. As of this writing, the Foamglas Telkes oven and F.I.T. cooker are still in regular use. The Telkes/Halacy oven was dismantled because of deterioration of the urethane insulation, plastic glazing (a retrofit after the original glass became too badly cracked and broken to serve any purpose), and plywood reflector shell. The modified Solar Chef is still in place on our test

platform, but is not usable because of broken glass in the cooking enclosure, a frequent, recurring problem. All of our successful cookers have been outdoors continuously since fabrication (or purchase), periods of 15 months to two years.

The primary output of the tests consisted of recordings of temperature versus time and insolation versus time. Very little actual cooking was carried out because of our need for quantitative comparisons, although rice was prepared on various occasions. Temperatures measured were of varying quantities of water (one to three liters) and oil, and oven temperature as measured by shaded temperature sensors.

Weather conditions were not particularly conducive to good results, due primarily to the large amount of water vapor present in the Summer months in the atmosphere over Florida. Our horizontal-plane pyranometer seldom recorded more than 250 btu/ft^{2}hr (800 W/m^2), and normally stayed below 200 btu/ft^{2}hr (630 W/m^2) until about 10 A.M. During Spring and Fall, higher values are typically measured, and we also observe higher oven temperatures than we did during our main testing period.

Results of the test program are presented in Refs. 1 and 2, and briefly summarized in the following paragraphs.

The modified Telkes/Halacy oven, tipped to always point at the sun (the original design was not meant to be tipped) showed the best performance: consistent 400°F (200 C) oil temperatures and time-to-boil of under 45 minutes for one liter of water. One liter of oil could be heated to 300°F (150 C) in about the same length of time. In all of our testing, the slopes of the water temperature curves decrease markedly as the temperature rises past about 180°F (80 C) due to rapid evaporation; oil temperature curves are more nearly linear in this region. (A very common characteristic of marginally-performing solar cookers is that water temperature will rise to within several degrees of the boiling point and stay there indefinitely without ever actually reaching a boil, at least in the case of our test pans which were not tightly covered due to the presence of temperature probes.)

The Foamglas Telkes oven performed well, but not on the same level: 350°F (175 C) or higher oil temperatures, boiling two liters of water in two hours, and heating a liter of oil to 300°F (150 C) in 85 minutes. The lower performance is attributed to the smaller window and reflector, for equal or greater useful capacity, and the fact that less insulation was used. A third factor might be the fact that the Foamglas Telkes oven used two layers of unduly thick tempered glass, with a noticeable green (iron) tint, while the Telkes/Halacy oven was fitted with two layers of plastic (Kalwall Sunlite II) glazing material at this time. The following section describes some design modifications - primarily thicker insulation and elimination of wasted volume - that should result in substantial improvement over this performance, although we have not had a chance to test the newer design yet.

The modified Solar Chef heated one liter of water from ambient to boiling in about one hour; quantities much greater than this were not feasible. Oil temperatures were not measured in this cooker. Within its range of capabilities, performance was close to that of the Telkes ovens. Construction costs are considerably less with this type of cooker since the "oven" is primarily just a glass cover, rather than a costly insulated box with a door and a window. Sturdy tempered glass covers could probably be mass-produced inexpensively. To be useful as an everyday means of cooking for a family group or several family groups, the cooker would have to be scaled up and perhaps a new design based on the same principle would have to be formulated. We believe further work along these lines is strongly indicated because of the potential saving in material cost relative to other designs.

The F.I.T. cooker was not tested as thoroughly as the preceding three designs, as it was being developed and modified throughout the period of the main testing program. The data collected indicated that its final performance was approximately equal to that of the Foamglas Telkes oven. One point that became obvious in the final assessment was that the oven box was somewhat larger than optimum for the size reflector used. The oven is the largest and roomiest of any that we have built to date, yet it is driven by an 8 ft (0.75 m) reflector, in a design where there is a shadow on the reflector proportional to the size of the oven. The size of the oven box, as well its location, undoubtedly had something to do with the general assessment that this cooker is much easier to use than any of the others. The later reflector design described in Section VIII was intended, among other goals, to provide increased reflector area without further elevating the oven. There is clearly an optimum insulation thickness, since too much insulation just results in an overly large shadow on the reflector, but we have not determined what that optimum thickness is.

At the time of this report, more than a year after the test program, the Foamglas Telkes oven and F.I.T. cooker are still being used from time to time, and the results reported in the test program can still be duplicated. Both ovens are permanently located outdoors, in conditions generally regarded as being very adverse in terms of causing corrosion, rot and mildew problems.

VI. TELKES OVEN DESIGN CONSIDERATIONS

Figure 2 shows a recommended Telkes oven configuration that resulted from our experiences with the first four Telkes ovens we built, and theoretical considerations. The door is on the right side in this cross-section drawing, and slides in and out. The two sides not shown are perpendicular to the door (parallel to the plane of the drawing) and situated such that the glass window is square. Details of the reflector are not shown in this drawing, nor is the means of attachment of the reflector to the oven, which could be cables or rods from the reflector rim to the oven body. The outer surface of the oven body would normally be thin-gauge sheet metal. A four-inch (10 cm) insulation thickness is

shown - probably the most that would be needed with any good (low conductivity) thermal insulation. The items to be cooked are placed on the swinging rack shown, so that the oven can be rocked about a horizontal axis without danger of spillage. In operation, the oven rocks about either of the two edges (1) or (2), and is braced with rocks or other locally-available material. While the sun climbs from the horizon to an elevation of about 40°, the oven is slowly tipped upward while resting on edge (1); at 40°, the oven is resting on the large diagonal surface between (1) and (2), and as the sun continues to rise, the oven is further tipped upward while resting on edge (2). If the sun reaches a point approximately overhead, the oven would then rest on the flat surface, perpendicular to the door, at the bottom of Figure 2. In the afternoon the process is reversed. Our experience has been that moving the oven every half-hour or so is normally sufficient, and if maximum performance is not required much longer adjustment intervals may be used, because of the oven's good heat storage (as long as the door is not opened). It will be noted that access to the oven is from above when the sun is low in the sky, and from the side at midday.

Figure 3 shows a "sun's-eye view" of the reflector, which consists of four rectangular and four triangular plane surfaces. This drawing also shows the importance of the four corner reflectors, which are omitted from some designs. Besides being of great importance structurally, they also reflect proportionally more light to the center of the oven than do the main reflectors, whose reflected rays are uniformly distributed across the entire window.

For maximum performance at least cost, it is impprtant that the oven not be any larger than necessary - that it contain as little wasted space as possible. Furthermore, we believe it is important that overall oven shape and pot pivot point be selected carefully to gain maximum benefit from the radiation entering the window. In Figure 2, four zones are indicated. The zone of maximum radiation "sees" the sun directly and also through both of the reflectors shown in this two-dimensional drawing. The zone of minimum radiation only sees the sun directly, while the other two zones see the sun directly and through one of the reflectors. A section drawing perpendicular to this one would show a similar situation, resulting in the zone of maximum radiation being shaped like an inverted pyramid with its base at the window, while the zone of minimum radiation is also pyramid-shaped. The configuration shown in Figure 2 has a much smaller zone of minumum radiation than the Foamglas Telkes oven we designed and tested (preceding section), and makes much better use of the zone of maximum radiation.

In designing an oven to accommodate a single cooking pot, with minumum wasted space, it would be desirable to taper the oven walls from three sides rather than just one. The resulting increase in fabrication difficulty does not seem justifiable, however, especially in view of the decreased versatility of the smaller oven, and also its decreased stability. The oven shown in Figure 2 will accommodate smaller vessels or other items on the rack beside the "largest pot" it was designed for, or two pots approximately 25% smaller than the largest pot.

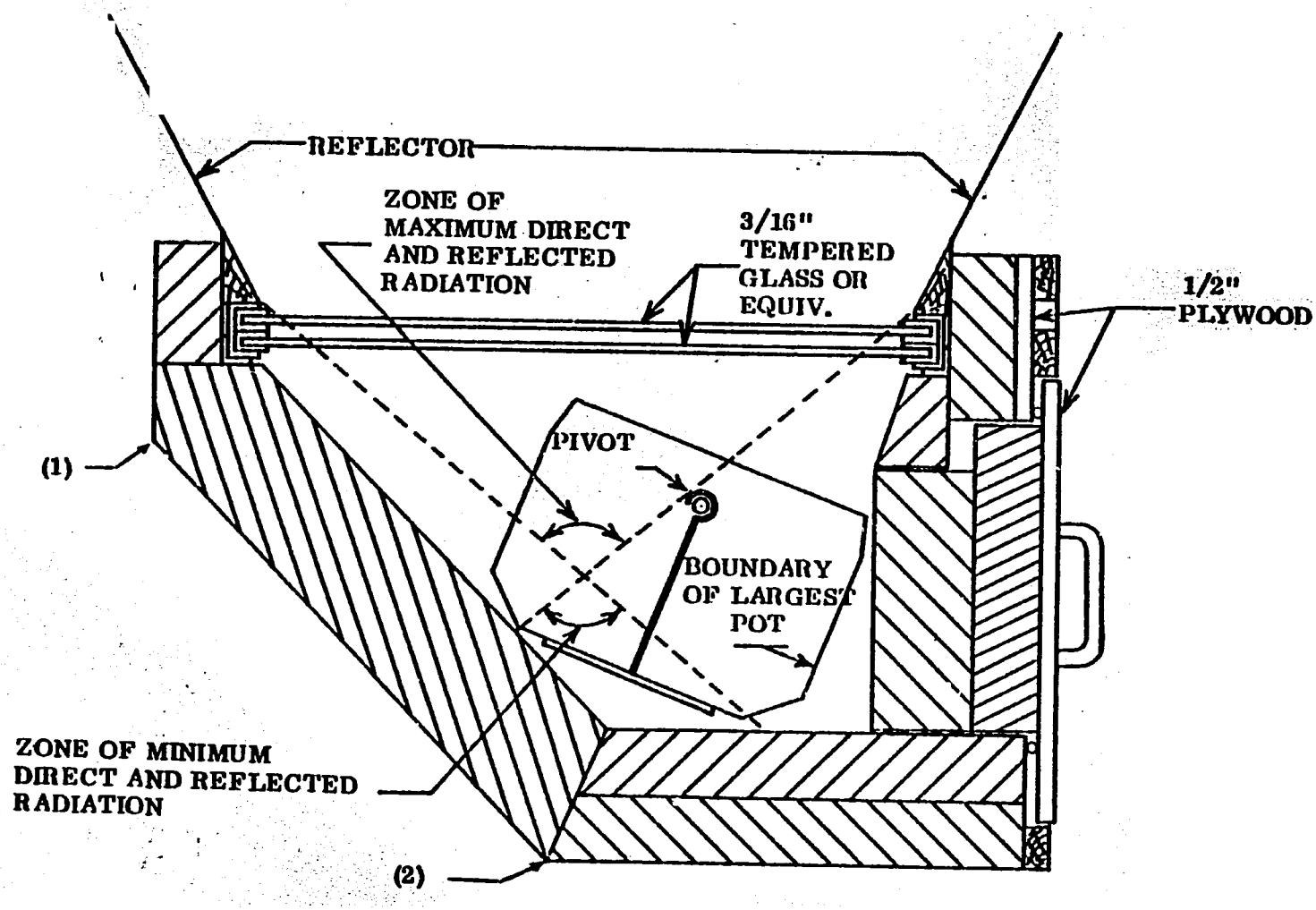

Figure 2. Design of the Foamglas Telkes oven: recommended configuration.

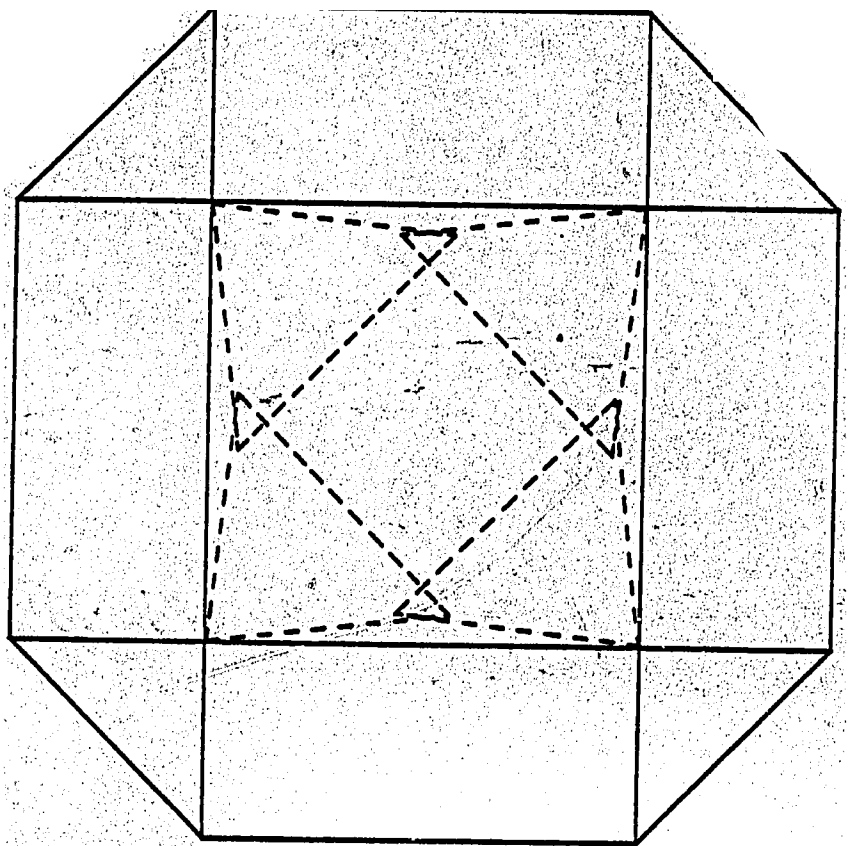

Figure 3. Foamglas Telkes oven reflector and window as seen by the sun. Triangles indicated by dashed lines are portions of window receiving reflected rays from the corner reflectors.

The key to designing the oven is therefore to first establish the largest pot to be accommodated, next to locate a pivot axis high enough on the pot for stability, and then to look at the total swept volume occupied by the pot as it swings through about 75° (from 15° to 90° solar elevation). The window size, relative to the pot size, then becomes the primary factor in determining oven shape. Both cost and cooker power are strongly dependent on the size of the window, which also determines the reflector size. Our experience has tended to indicate that the window aperture should not be much smaller than twice the diameter of the largest pot, but this is a point where additional research is needed to produce a more definitive guideline.

If the height of the largest pot is much greater than 70 percent of the diameter, the oven design will be adversely affected. The volume needed to swing a tall pot is much greater, and the rack must be farther from the window.

Conductive heat losses from the oven will be greatest at the window, and might lead to a significant thermal gradient near the window that has not been taken into account in our design based on consideration of radiation zones. This is also an area where additional research is indicated.

The heat loss through the window is greatly reduced by double glazing, and still more by additional layers of glass and air gaps, although the incoming radiation is also decreased by additional layers of glass. Telkes (Ref. 8) has investigated the question of number of glass layers, with results as shown in Figure 4. Our experience has been that the glass (if glass is used) must be tempered to stand up to the high temperatures, and the cost of tempered glass is such that use of three layers is not economically justified. The alternative is plastic glazing, which we have not had much success with on a long term basis at these high temperatures.

Metallic content of the glass is another variable that will affect performance. Most of our work has been done using glass with a high iron content (as evidenced by a noticeable green tint) which absorbs enough sunlight to have an adverse effect on performance. Low-iron glass, if available, would give better results, although the more absorptive glass probably results in a smaller thermal gradient near the window due to the high temperature of the glass itself.

The insulation materials we used in our first Telkes ovens - fiberglass and urethane foam - gave problems, the former because of damage by moisture and the latter due to charring at the high temperatures it was exposed to. A study of the normal insulation materials commercially available in the U.S. showed that most - e.g., expanded polystyrene, corkboard, glass fiberboard, urethane foam, phenolic foam, and Celotex "Technifoam" - all had maximum rated temperatures less than 400°F (200 C). Fire brick and asbestos board have high rated temperatures, but are prohibitively expensive. Foamglas and calcium silicate both have good temperature ratings (900°F-480 C and 1200°F-650 C, respectively), but Foamglas is considerably cheaper and impervious to

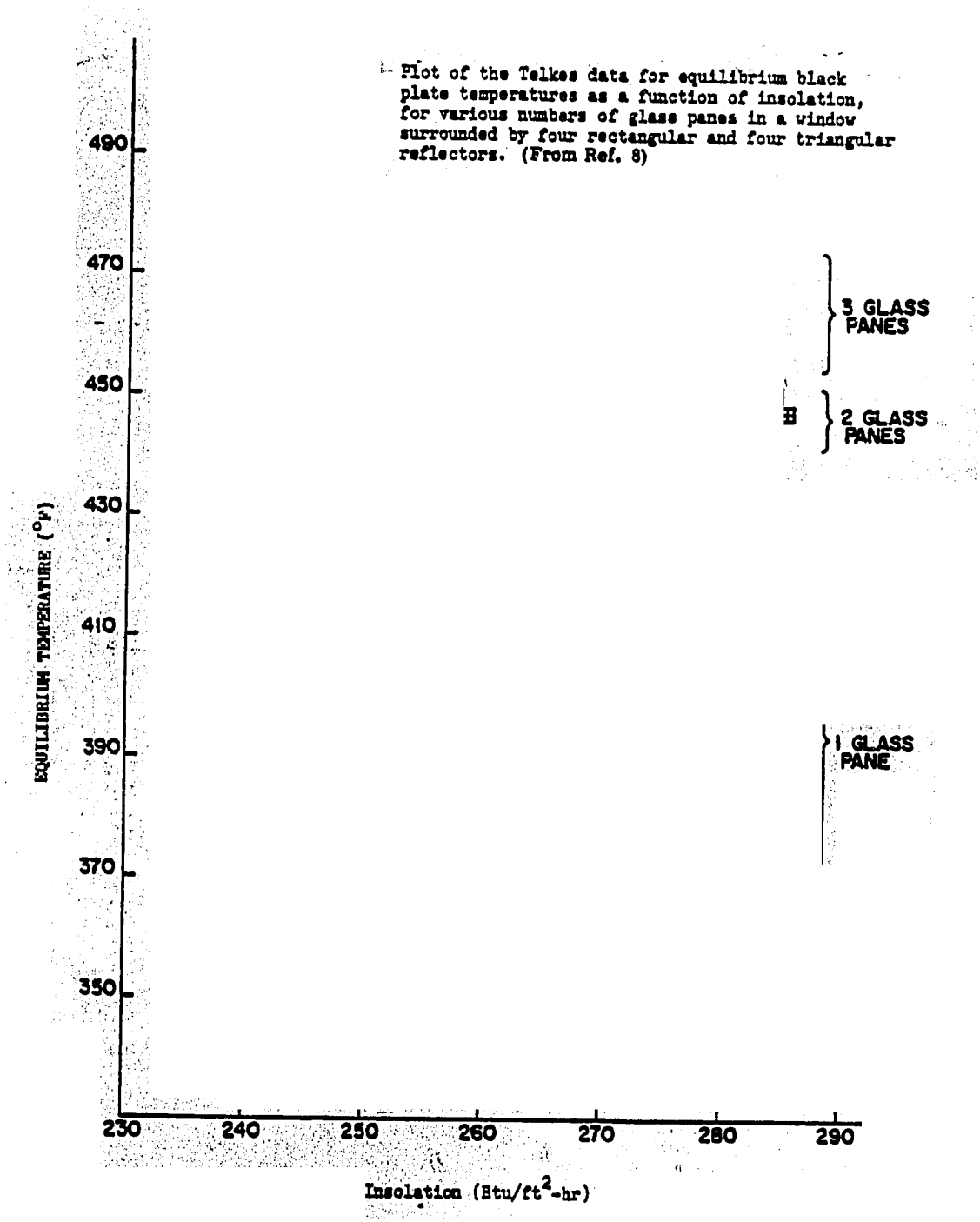

Plot of the Telkes data for equilibrium black plate temperatures as a function of insolation, for various numbers of glass panes in a window surrounded by four rectangular and four triangular reflectors. (From Ref. 8)

moisture, and hence was the insulation of choice for all our later prototype work. (It is also inorganic, non-toxic, nonflammable, lightweight, and has a very rough black surface that makes it an excellent absorber of solar radiation.) It has certainly not escaped our attention, however, that Foamglas is not readily available in most parts of the world, and even if it were it might be relatively expensive compared to other possible insulating materials. We have not done any work with ovens whose walls are made of indigenous earthen or other materials, and believe this research should have a high priority. One disadvantage of indigenous materials is the anticipated weight increase, which would probably be very significant unless volcanic rock were available.

The oven design we show in Figure 2 uses 4-inch (10 cm) Foamglas walls, which should be sufficient for very high performance - most of our experimental work reported in Section IV was with ovens using half that thickness of Foamglas, and the performance was satisfactory although the outside of the oven was warm to the touch, indicating significant heat loss. Thermal conductivity of Foamglas is about 0.06 W/m-°C, so an indigenous insulation with conductivity as high as 0.12 W/m-°C should yield acceptable performance with 10 cm walls. This value is still an order of magnitude lower than common brick, concrete, stone, etc., and about a factor of 4 better than gypsum plaster, so the problem is a very real one.

The reflector is essentially a sheet metal shell, stiffened by a flange around the outer edge. If the metal itself is polished, anodized aluminum (e.g., Alzac) nothing more is needed, but the reflector will be extremely expensive at current prices of about $2.50 per square foot ($25/m^2). In addition, the Alzac surface does not last forever, and dents very easily in the thinner (and hence less expensive) gauges. Plane glass mirrors, available in thin one-foot (30 cm) squares at about one-fifth the price of Alzac, are also probably more permanent, and we are currently experimenting with methods of attaching them to the inside of a sheet metal reflector shell. The problem here is to avoid putting all the cost savings generated by use of glass mirrors back into the shell structure.

Still another consideration regarding the reflector design is the actual angle to be employed. The reflector must be at an angle of more than 45° from the plane of the window, as that angle would result in reflection parallel to the window. As far as we can tell, most Telkes ovens through the years have used 60° reflector angles - a value that makes computation especially simple, and leads to a very "right"-looking design. We have used 65° angles in some of our ovens, as it leads to more nearly normal incidence of the reflected rays at the window and also allows slightly larger reflectors to be used. There is of course a multiplying factor of two at work: with a 60° reflector, the reflected rays impinge on the window at 60° from the normal, while with a 65° reflector they are only 50° from the normal.

An important contributing factor to the high cost of building either Telkes or Adams-type cookers in the fact that this small (25°-30°)

angle between the reflective surface and the sun's rays results in the total surface area of the reflector being more than twice its projected area.

VII. UP-RATED SOLAR STEAM COOKER

The solar steam cooker developed by Brace Research Institute (see Sections II and III above) was considerably different in operating principle from other solar cookers, and had the very distinct advantage of being a stationary installation. However, our experience was that, although easy to use, the temperatures reached in the cooking vessel were not high enough to allow practical cooking.

It seemed to us that this cooking concept had not really had a fair trial due to the primitive design of the solar collector, especially lack of thermal contact between the fluid tube and absorber plate and the use of only one fluid tube for a very wide absorber plate, so we built a solar collector based on current flat-plate collector design principles with emphasis on high temperature operation (100 C). The result is shown in Figure 5, and described in detail by Yenamandra in Ref. 13. The selective coating referred to is actually a layer of black chrome-plated copper foil, 0.0028 inch (.07 mm) thick, bonded to the copper absorber panels. The black chrome-plated foil is sold commercially under the trade name "Solar Strip".

One of the features of Yenamandra's design is the fact that the solar collector portion of the cooker can swing about a horizontal axis at the top of the collector, to allow adjustment for different solar elevations. The cooker itself and the main support stand are permanently fixed in place. With the sun low in the sky, the bottom of the collector rests on the ground, giving a collector angle of about 60° from the horizontal; as the sun rises above 30°, the bottom of the collector can be raised (on rocks, boxes, or whatever is available) for increased performance.

Results were considerably better than with the first cooker of this type that we built. Although water in the cooking vessel still could not be boiled - a theoretical impossibility with this type cooker unless the fluid system were pressurized - one liter of water was heated from 72°F to 194°F (22 C to 90 C) in 65 minutes. Highest recorded water temperature in the pot was 201°F (94 C). Various dishes consisting of rice, beans, and eggs were cooked, typically in about one hour starting with ambient-temperature food but the cooker at operating temperature (generating steam). The water heating time quoted above was also measured from a steam-up starting point.

Time to start generating steam varied with the amount of water in the collector, from 25 minutes with one liter of water to 50 minutes with 2 liters of water. With only one liter of water in the collector, however, the rate of steam generation was not sufficient to heat the water in the cooker at a reasonable rate.

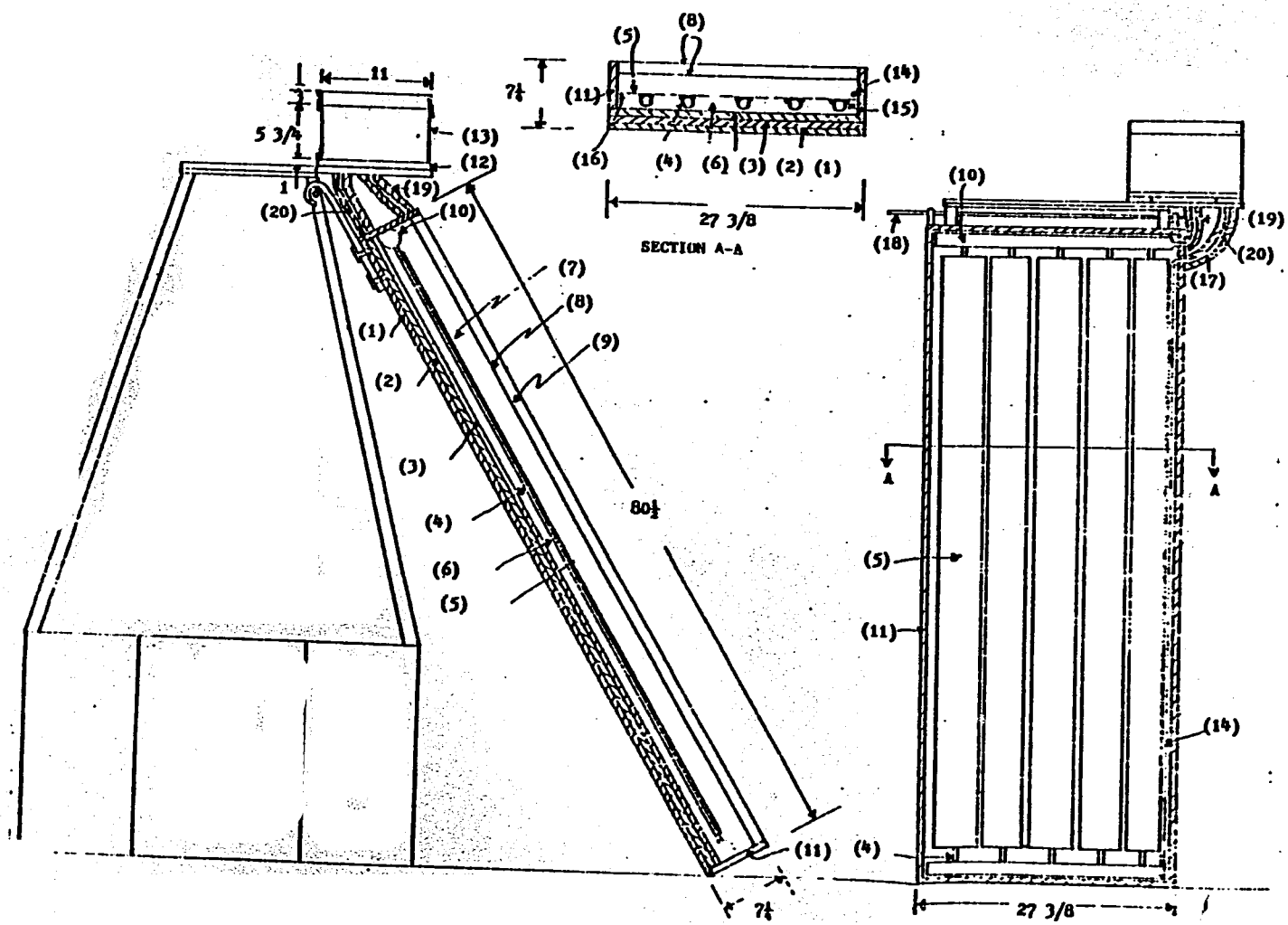

1. Plywood insulation and support 3/8" thickness
2. Fiberglass insulation board 1" thickness
3. Urethane foam insulation 5/8" thickness
4. Copper tubes 6'2 5/8" length, 3/8" inside diameter, ½" outside diameter
5. Copper absorber plates with selective coating 6' x 4½" x 0.02" - 5 pieces
6. Air gap between the absorber plate and bottom insulation, 3/4" thickness
7. Spacing between the absorber plate and the 1st cover plate, 2½" thickness of air gap
8. Cover plates, fiberglass reinforced plastic; Kalwall Sunlite regular t = 0.05"
9. Spacing between the two cover plates, 2½" thickness of air gap
10. Top and bottom header tubes, 1½" diameter, 2' length
11. Edge insulation, fiberglass board 1" thickness
12. Wooden stand to hold cooker box
13. Cooker box 11" x 11" x 8 3/4"
14. ¼" copper tube connecting the bottom header to the cooker box outlet
15. Bending material (silver solder) to hold tube against absorber plate
16. ½" air gap between the absorber plate and the edge insulation
17. Fiberglass insulation around hoses carrying steam and condensed hot water
18. 3/8" iron rod passing through the support structure
19. 1" hose connecting the steam outlet of collector to cooker box inlet
20. 1" hose connecting the cooker outlet to the collector inlet

Figure 5. High technology version of solar steam cooker

(from Yenamandra, Ref. 13)

The flat plate collector has a gross area (to the edges of the box) of 15.5 ft^2 (1.44 m^2), and with the selective - surface absorber is similar to models selling for substantially more than $15/$ft^2$ in the U.S. Hence our conclusion was that while this cooker was generally successful, its cost was at least as great as the most expensive of the other cookers and its performance was not nearly up to the level of the Telkes oven, Adams cooker, or F.I.T. cooker. While the cost could undoubtedly be brought down by local fabrication and (perhaps) cheaper materials, extreme cost-cutting as in the case of the original design probably cannot be achieved without severely degrading performance. One of the major cost factors is the material for the absorber plate, which, being a fin, must have good thermal conductivity. Since about 3 m^2 of glazing material is required, we believe glass is out of the question - plastic glazing is required for economic reasons. If the collector is not exposed to the sun in a dry state the plastic glazing should not reach the high temperatures that cause short useful lifetimes in other cookers.

VIII. F.I.T. COOKERS 2 AND 3

The tests reported in Section V indicated that the first "F.I.T. cooker" performed well, and was especially simple and convenient to use and versatile, but its performance was not outstanding because of the limited reflector size. Furthermore, the reflector was costly in spite of its small size, because of the need for "Alzac" or similar rather than back-silvered glass to fabricate the curved reflector. F.I.T. cooker number 2 was designed to overcome both of these difficulties by replacing the single curved reflector with a fixed array of individually pivoting reflectors.

In the F.I.T. cookers, reflected light enters the oven through a single window in the bottom of the oven. The light can come from a range of directions on either side of the normal, although the fraction of energy transmitted by a given thickness of glass decreases as the angle (from the normal) increases. For practiacl purposes, we considered the window's effective "field of view" to be approximately one quadrant (90°). Useful portions of the reflector must therefore lie within this quadrant. Hence the maximum useful size of the reflector is proportional to its distance from the oven. Since the reflector is below the oven, this in turn means that the maximum reflector size is proportional to the height of the oven above the ground. Limitations on this height result in limitations on the reflector size.

In the design of the first F.I.T. cooker, the maximum reflector length was approximately equal to the height of the oven window (each was 4 ft. (1.22 m) in the prototype.) This length limit results from the need for ground clearance as the reflector swings about its pivot, and was found graphically following consideration of various combinations of focal length and pivot location. With the same limitation of a 90° field of view, the maximum length of a field of reflectors at ground level

would be twice the height of the oven window. Although this theoretical limit could not be achieved in a practical case because of the need to rotate the cooker and move it around, it does indicate the potential for improvement in reflector size without raising the oven.

A further consideration is cost. If the reflector can be made of plane segments, glass can be used instead of reflective sheet aluminum, at a cost per unit area about one fifth that of "Alzac". (Ordinary sheet aluminum can be polished by hand to a highly-reflective surface, but the surface oxidizes rapidly (noticeable change within days) and polishing requires proper abrasive, some skill, and much time, and at best the result is inferior to the electropolished and anodized commercial product.) Furthermore, if each segment rotates about its own centerline, and if that centerline does not move relative to the target (the oven window), then as the elevation of the sun changes by an angular amount x, the angular orientation of the reflective segment should change by exactly x/2, regardless of its position relative to the oven. Hence if a reflector array is constructed, consisting of individual segments rotating about their own fixed centerlines, then any adjustment of the reflectors as the sun rises and sets will consist of rotating every segment by the same amount. A simple linkage can be devised to accomplish this equal rotation by moving a single element.

In our first prototype using a fixed array of rotating reflectors ("F.I.T. cooker number 2") we also raised the oven to a point where a ten foot (3.05 m) reflector array could be used, as we wanted to create a multi-purpose research device, and in particular wanted to use the oven to investigate pyrolyzing water hyacinth to obtain combustible liquid residuals - work that has not yet been completed. The reflector array is positioned at an angle of 10° from the horizontal, on the basis of results of a computer simulation concerned with total energy delivered to the oven for arrays at different angles, at various latitudes. (A horizontal array, for example, would be optimum when the sun is directly overhead, but "looks" small when the sun is near the horizon.) The oven is a circular cylinder with a door on one end - a less convenient arrangement than the rectangular oven with door on one face, but chosen because of the smaller shadow cast on the reflectors for sun angles in the vicinity of 45°. The oven's inside dimensions are 8 inch (.20 m) diameter by 14 inch (.36 m) long. This protype is further described by the drawings of Figure 6.

The results of tests with this prototype were especially good. Figure 7 shows three temperature histories measured on March 27 and 30, 1978. These temperatures are not oven temperatures, which would climb even more steeply, but rather temperatures of a 2.5 lb (1.1 kg) "test load" of eutectic (63% tin, 37% lead) solder, selected because it is a liquid in the temperature range of interest, has a well-defined melting point with which to calibrate the thermal measurement system, and presents no flammability or decomposition problems. The solder was contained in a 250 cc carbon crucible. The flattening of the temperature curves at 366°F (185.6 C) is a result of the solder melting at this temperature, and also indicates that the measured temperature was about 5°F

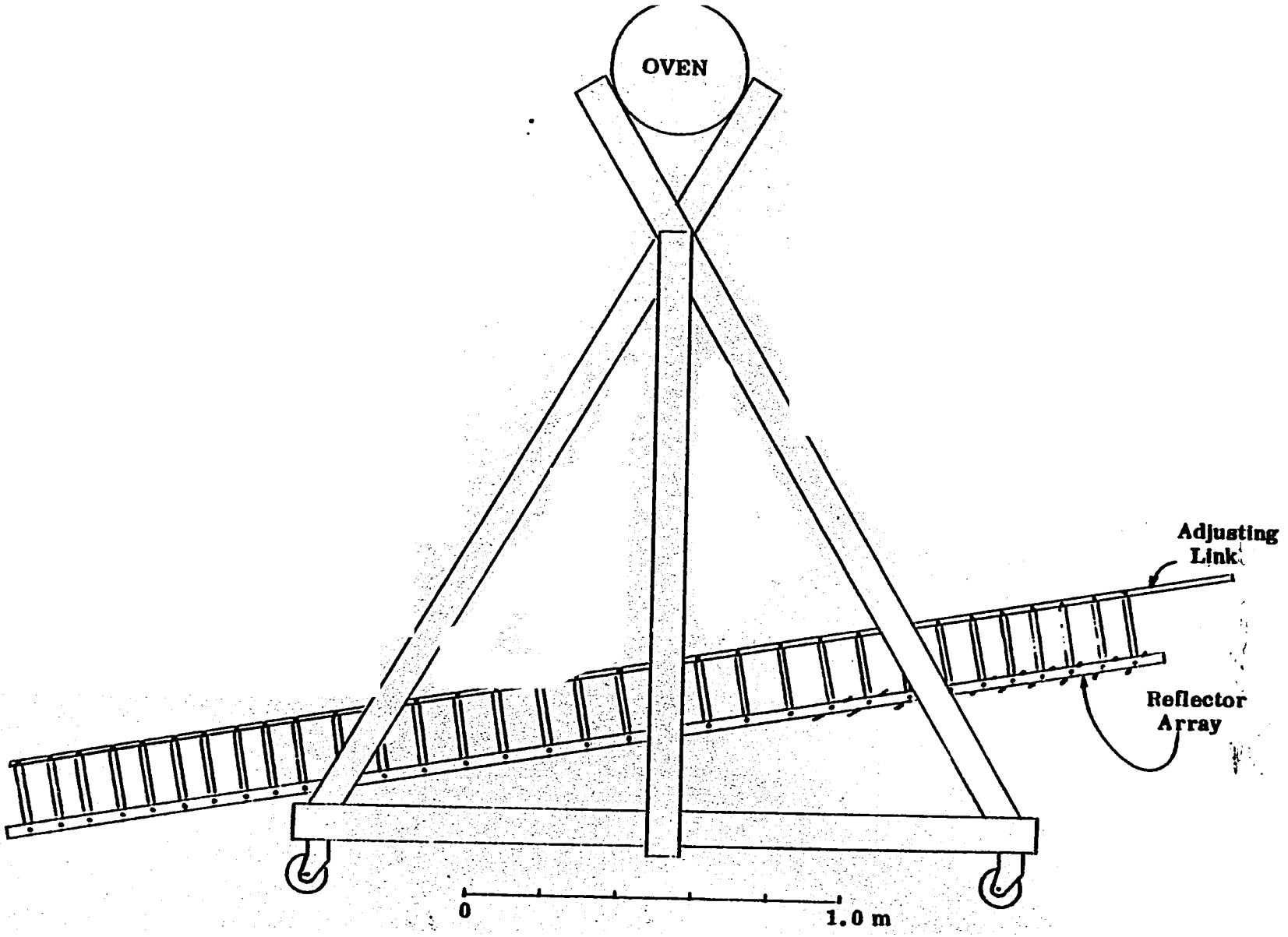
OVEN
Adjusting Link
Reflector Array
0
1.0 m

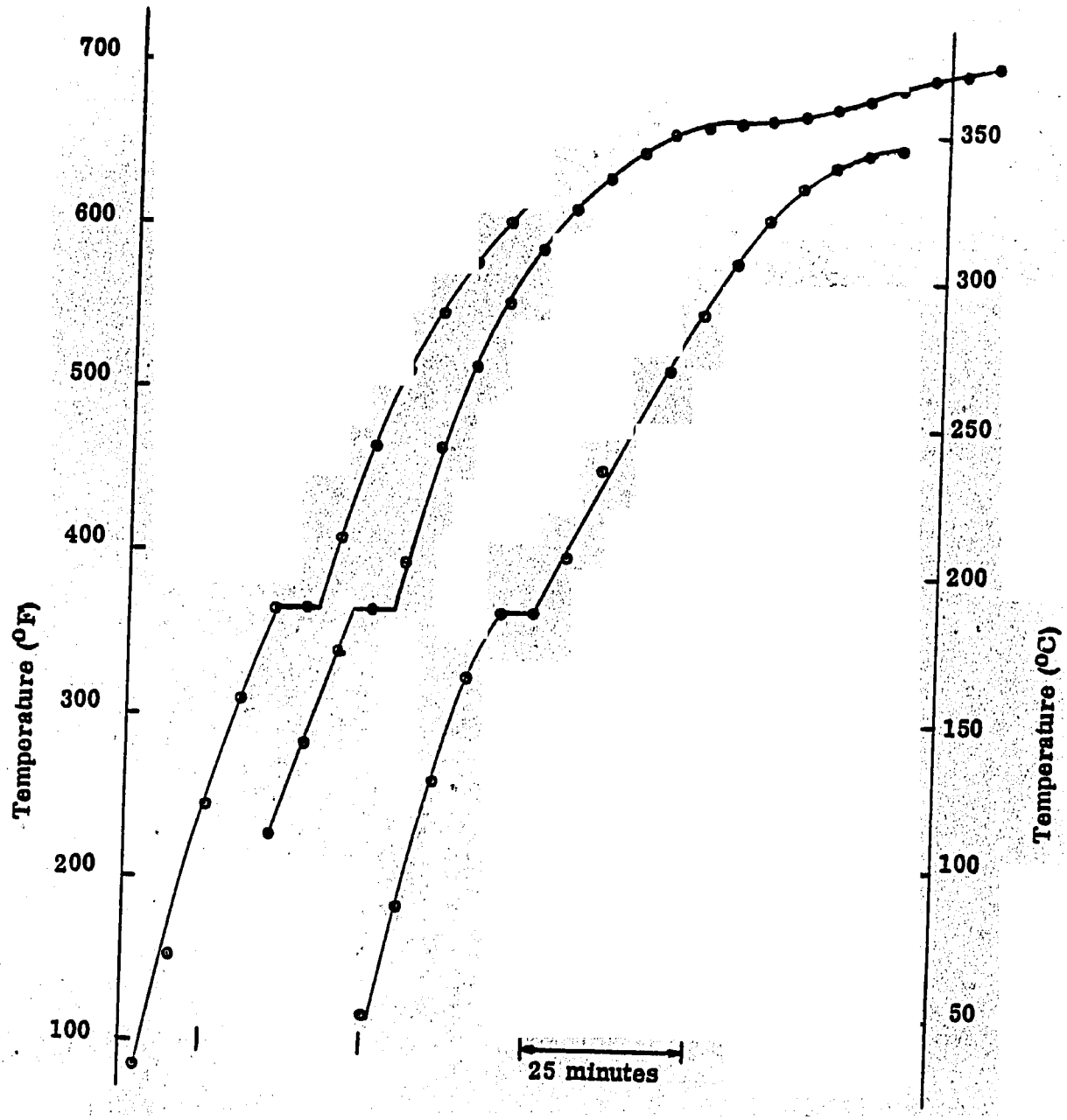

Figure 7. Measured temperatures of a crucible containing 1.1 kg of eutectic lead-tin alloy, in F.I.T. cooker number 2. The curves represent three tests conducted in late March, 1978, at Melbourne, Florida. Tests were run at different times of the day: 9-10 am (left curve), 10:30 am - noon (center curve), and 2-2:30 pm (right curve). Horizontal portions of the curves indicate the melting point.

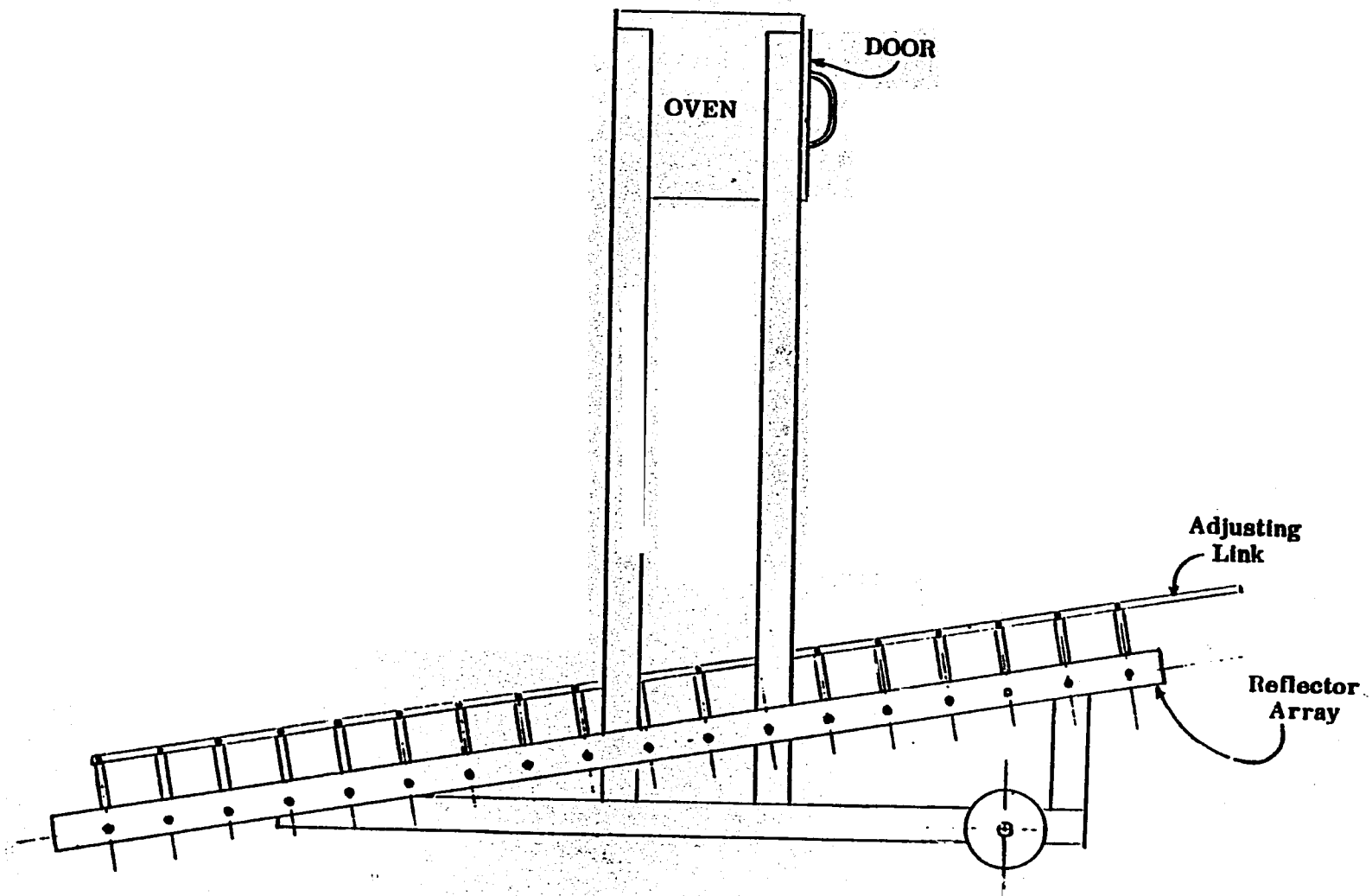

Figure 8. F. I. T. cooker number 3.

(2.8 C) high at this temperature since the actual melting point of eutectic solder is 361°F (183 C). Both days were sunny, insolation at about 80 mW/cm^2 throughout the tests, ambient temperature approximately 30 C, light, steady breezes at about 2 miles per hour (1 m/s). Starting times for the tests are indicated on the plots. The tests were performed in Melbourne, Florida, latitude 28N.

A second prototype using a fixed array of rotating reflectors was designed in November, 1978, and is currently being built. This prototype was designed specifically as a cooker, with a rectangular oven at a more convenient height, and with a larger door. The reflector array is consequently shorter, although somewhat wider than in cooker number 2. Total power received by the oven will be larger, but maximum temperature will be lower because of the larger oven and smaller concentration ratio. The structural framework, designed to use slotted steel angle, is much simpler than in the case of cookers 1 and 2 because of the use of the outer sheet metal shell of the oven itself for structural stiffness, hence saving both material and fabrication time. This cooker is shown in Figure 8.

ACKNOWLEDGMENTS

The work described in Sections I through VI was supported by the United States Agency for International Development under Contract AID/ta-c-1333, "Solar Cookers for Haiti".

Many students and faculty members at Florida Institute of Technology contributed to various aspects of the work summarized herein, especially Drs. Joel H. Blatt and James R. Sharber of the Department of Physics and Space Science, Ken Williams who developed our modified version of the Telkes/Halacy oven, Wolf Eckroth who developed our modified version of the "Solar Chef" Adams cooker, Robert Drury who built our reproduction of the Prata cooker, and Narasaraju Yenamandra who designed the up-rated solar steam cooker described in Section VII and also contributed significantly to most other aspects of the program. Especial thanks are also due to my son, Paul, who was responsible for building and testing "F.I.T. cooker number 2" described in Section VIII, and to Mrs. Brenda Hill for typing this manuscript.

REFERENCES

1. Bowman, T.E., Sharber, J.R., and Blatt, J.H.: "Solar Cookers for Haiti - A Feasibility Study." Final Report, Contract AID/ta-c-1333, December, 1977.
2. Bowman, T.E., and Blatt, J.H.: "Solar Cookers: History, Design, Fabrication, Test, and Evaluation." Report CREA-78-1, Center for Research on Energy Alternatives, Florida Institute of Technology, Melbourne, Florida 32901, U.S.A., March 1978.
3. Nutrition Division, Food and Agriculture Organization of the United Nations: "Report on Tests Conducted Using the Telkes Solar Oven and Wisconsin Solar Stove over the period July to September 1959." Paper S/116, Proceedings of the United Nations Conference on New Sources of Energy (Rome, 21-31 August 1961), Volume 5, Solar Energy: II. United Nations Publication No. 63.I.39, pages 353-358.

4. Khanna, M.L.: "Solar Heating of Vegetable Oil." Solar Energy, Vol. 6, No. 2, pages 60-63 (1962).
5. Löf, G.O.G., and Fester, D.A.: "Design and Performance of Folding Umbrella-Type Solar Cooker." Paper S/100, Proceedings of the United Nations Conference on New Sources of Energy (Rome, 21-23 August, 1961) Volume 5, Solar Energy: II. United Nations Publication No. 63.I.39, pages 347-352.
6. "Evaluation of Solar Cookers". VITA Report No. 10, Volunteers in Technical Assistance, 3706 Rhode Island Ave., Mt. Rainier, Maryland 20822, U.S.A. (no date).
7. Tabor, H.: "A Solar Cooker for Developing Countries." Solar Energy, Vol. 10, No. 4, pages 153-157 (1966).
8. Telkes, M.: "Solar Cooking Ovens." Solar Energy, Volume III, No. 1 (January 1959), pages 1 - 11. A photograph of a Telkes oven is featured on the cover of this journal.
9. Telkes, M., and Andrassy, S.: "Practical Solar Cooking Ovens." Paper S/101, Proceedings of the United Nations Conference on New Sources of Energy (Rome, 21-31 August 1961), Volume 5, Solar Energy: II. United Nations Publication No. 63.I.39, pages 394-399.
10. Prata, S.: "A Cylindro-Parabolic Solar Cooker." Paper S/110, Proceedings of the United Nations Conference on New Sources of Energy (Rome, 21-31 August 1961), Volume 5, Solar Energy: II. United Nations Publication No. 63.I.39, pages 370-379.
11. Whillier, A.: "A Stove for Boiling Foods Using Solar Energy." Sun at Work, Volume 10, No. 1, pages 9-12 (1965).
12. Beason, R.G.: "Solar Cooking Turns Practical." Mechanix Illustrated, July 1976, p.32.
13. Yenamandra, N.: "An Experimental Investigation of a Flat-Plate Solar Steam Cooker." M.S. Thesis, Florida Institute of Technology, Melbourne, Florida, 1978.

CURRICULUM VITAE

Dr. Thomas E. Bowman is Professor and Head of the Mechanical Engineering Department at Florida Institute of Technology and Director of the Center for Research on Energy Alternatives. He is a graduate of California Institute of Technology (B.S. and M.S. in Mechanical Engineering) and Northwestern University (Ph.D. in Mechanical Engineering), and has formerly been a Research Scientist in the Propulsion Research and Development Department of Martin Marietta Corporation, Denver, Colorado, and Lecturer in Applied Mathematics at the University of Reading, England.