BIBLIOGRAPHIC DATA SHEET

1. CONTROL NUMBER	2. SUBJECT CLASSIFICATION (695)
PN-AAJ-274	AE30-0000-G218

3. TITLE AND SUBTITLE (240)

Senegal food and energy study: energy use and opportunities for energy-related improvements in the food system

4. PERSONAL AUTHORS (100)

5. CORPORATE AUTHORS (101)

Brookhaven National Laboratory; Checchi and Co.

6. DOCUMENT DATE (110)	7. NUMBER OF PAGES (120)	8. ARC NUMBER (170)
1980	270p.	SG338.19.C514

9. REFERENCE ORGANIZATION (130)

BNL

10. SUPPLEMENTARY NOTES (500)

11. ABSTRACT (950)

12. DESCRIPTORS (920)

Senegal
Energy
Agricultural production
Food industry
Food technology
Energy consumption
Energy levels

13. PROJECT NUMBER (150)

14. CONTRACT NO.(140)

PA/ERDA/TAB-995-18-76

15. CONTRACT TYPE (140)

16. TYPE OF DOCUMENT (160)

AID 590-7 (10-79)

PN-AAJ-274

SENEGAL FOOD AND ENERGY STUDY

ENERGY USE AND OPPORTUNITIES FOR ENERGY-RELATED IMPROVEMENTS IN THE FOOD SYSTEM

CHECCHI AND COMPANY, WASHINGTON, D.C.
in collaboration with
BROOKHAVEN NATIONAL LABORATORY, UPTON, NEW YORK

AUGUST 1980

SENEGAL FOOD AND ENERGY STUDY

ENERGY USE AND OPPORTUNITIES FOR ENERGY-RELATED IMPROVEMENTS IN THE FOOD SYSTEM

CHECCHI AND COMPANY, WASHINGTON, D.C.

in collaboration with

BROOKHAVEN NATIONAL LABORATORY, UPTON, NEW YORK

AUGUST 1980

TABLE OF CONTENTS

		Page
	PREFACE	
	EXECUTIVE SUMMARY	i
Chapter 1	BACKGROUND	1
Chapter 2	FOOD SYSTEM OVERVIEW	11
	A. Food Crop Characteristics: Production to Consumption	13
	B. Physical and Institutional Factors in Agriculture	25
Chapter 3	ENERGY SYSTEM OVERVIEW	55
Chapter 4	ENERGY USE PROFILES	79
	A. Scope and Methodology	79
	B. Millet and Sorghum	84
	C. Rice	106
	D. Groundnuts	136
	E. Artisanal Fishing	158
	F. Cooking	181
Chapter 5	POTENTIAL AREAS OF CONCENTRATION	191
Chapter 6	CONCLUSIONS AND RECOMMENDATIONS	235
Annex A	GLOSSARY OF INSTITUTIONS	
Annex B	REFERENCE BIBLIOGRAPHY	

PREFACE

This study of energy use and opportunities for energy-related improvements in the food system of Senegal is the product of a collaborative effort between Checchi and Company and Brookhaven National Laboratory/Associated Universities, Inc. (BNL). In July, 1978, Checchi was awarded BNL Contract No. 453323-S to conduct a study of Senegal's energy and food system. A preliminary report, including the overview material and energy use profiles (Chapters 1-4) and identifying potential areas for energy-related improvements, was submitted in BNL in July, 1979. Following review of this submission and some additional field work undertaken by BNL, a final report was prepared incorporating an evaluation of the potential energy improvement areas (Chapter 5) and the study conclusions and recommendations (Chapter 6).

Participating in the study for Checchi and Company were Patricia McPhelim, the project coordinator and principal author of Chapters 1-4, and Ernest Murphy, who conducted the initial series of field interviews and developed the energy profiles for groundnuts, millet and sorghum, and rice. Gerhard Tschannerl, Gordon McGranahan, and Vinod Mubayi, all with Brookhaven National Laboratory, contributed to the design of the analytical framework for the study and prepared the drafts of Chapters 5 and 6.

The authors of the study would like to thank Pamela M.J. Cox, a doctoral candidate at the Fletcher School of Law and Diplomacy who provided valuable insights on the structure of Senegal's food system gained from her previous field research, and Charles Steedman of the University of Michigan Center for Research on Economic Development who reviewed the energy system overview in Chapter 3. Credit for report production goes to James Woldahl, Cae Johnston, and Jeanne Pham.

EXECUTIVE SUMMARY

Scope of Study

The study examines the structure and energy consumption patterns of key components of the food system in Senegal. Its aim was to identify areas in that system where (1) energy savings might be achieved through the introduction of more efficient technologies, (2) more desirable energy sources might be substituted for less desirable ones, and (3) increases in food product output might be attained through the efficient application of additional amounts of energy. To that end, energy profiles were constructed for the four main food products in Senegal -- millet/sorghum, rice, groundnuts, and fish caught by the artisanal maritime fishing fleet -- covering the entire system from crop production (through processing, storage, and transport) to distribution. A fifth profile analysis was done for cooking.

Prospective areas for energy-related improvement, identified from the energy profiles through the application of the above criteria, were evaluated for their potential energy impact, development impact, implementability, and uniqueness of U.S. role in providing assistance. The most promising areas were then recommended as targets for energy-related project design activities.

Agriculture Overview

Groundnuts and several varieties of millet and sorghum are the principal crops. Rice, maize, peas and beans, root crops, cotton, and vegetables are also produced. About two-thirds of the rural population lives in the Groundnut Basin in the west-central part of the country. The Sahelian drought of 1968-73 has had a devastating effect on the already overused agricultural land, particularly in the Groundnut Basin. One of the consequences has been a heavy influx of migrants into the cities.

The Government has made considerable progress over the years with the introduction of improved farming technologies. Locally-made animal-drawn implements are now widely employed by farmers in the Groundnut Basin, and the use of selected seed varieties and commercial fertilizers -- the latter blended in Senegal from domestic and imported raw materials -- is also becoming increasingly widespread. Rice, once grown only in the well-watered southern regions, is now being produced on irrigated land in the extreme north. But in spite of all these efforts, Senegal is still far from its goal of achieving self-sufficiency in food grains, importing at least 300,000 tons of rice, wheat, and other cereals even in the best of good years.

Energy System Overview

Wood is the principal source of fuel in Senegal, accounting for an estimated 60 percent of total fuel use, compared with about 40 percent attributable to imported oil and gas. The steadily increasing rate of wood consumption is an important factor, together with recurrent drought, brush fires, and overgrazing, in the rapid reduction of Senegal's forest reserves. The Government has sought to counter this trend with controls on commercial firewood and charcoal production, promotion of alternative fuels (primarily butane), and a variety of forest conservation and afforestation projects.

With no known, readily exploitable fossil fuel resources, apart from a small deposit of natural gas, Senegal relies almost entirely on imports for its commercial energy requirements. The principal consumers of domestically-refined oil are transport, fishing, mining, and electric power generation.

The Government attempts to regulate the use of fuel oil through a system of price controls, taxes, and selective subsidies. Over the past 20 years, renewable technologies have been given considerable attention in

Senegal, and several devices, particularly small-scale photovoltaic and solar-thermal pumps, have been developed and field tested to the point where they can now be distributed on a commercial scale.

Food-Energy Profiles

The five components of the food system examined by this study account for the bulk of all commercial energy used in producing, storing, processing, distributing and cooking food in Senegal. More than half of this energy is required for a single operation, namely motorized fishing by the artisanal fleet, which accounts for an estimated 5.4 percent of total domestic liquid fuel consumption. Relative to other areas of the economy, however, the food system (including groundnuts) consumes only a small portion of aggregate commercial energy supplies: an estimated 6.2 percent of all liquid fuels and less than one percent of all electricity used in the country.

Millet and sorghum make relatively few demands on the country's energy system. Most of the output is cultivated and harvested by traditional methods and stored and processed at the farm or village level. While some chemical fertilizers and pesticides are employed, the amounts are small in absolute terms as well as in comparison with those used for cash crops, such as groundnuts.

Rice has been the target of several Government-sponsored development programs and about two-thirds of the fossil fuel energy used in the rice system is consumed by capital-intensive irrigation projects in the Senegal River Valley. Existing plans to expand these projects call for the allocation of ever larger amounts of commercial energy to rice production.

Production technologies for groundnuts are similar to those for millet and sorghum, except that the use of animal traction and commercial inputs (treated seeds, fertilizers, and some pesticides) is somewhat more widespread. The bulk of the crop is transported to one of five industrial oil

mills for processing, involving significant fossil fuel inputs, even though some of the oil mills' energy needs are met by burning groundnut shells.

The artisanal fishing fleet consists of open wooden boats, the majority of which are now equipped with outboard motors. More than 80 percent of the annual catch is consumed in a fresh state. Traders usually pack the fish in ice and truck it to Dakar and other cities. The remainder is cleaned, dried and stored. Lack of adequate cold storage and ice-making facilities, as well as insect infestation and decay due to improper drying methods of processed fish, result in a high product loss.

Since Senegal has virtually no oil, gas, and coal reserves of its own, and since food transformation technologies using solar power as yet do not represent viable alternatives, fuelwood will continue to be the main energy source for cooking. All efforts must therefore be made to conserve, regenerate, and make efficient use of the country's forest resources.

Self-sufficiency in grain will require higher yields, which can only be attained through the expenditure of additional energy, both commercial and traditional, for such processes as irrigation, fertilizer application, and pest control. This additional energy should be put where it results in the greatest increase in agricultural product. The efficiency with which energy is used in the food system can also be increased through the reduction of product losses, particularly fish and grain losses during storage.

Recommended Areas for Energy Improvement

The following high potential areas for energy improvement have been identified from the energy use profiles:

Fish Preservation. Fishing from small motorized craft consumes more than half of all commercial energy used in Senegal's food system. Losses of fish in transit and storage due to insect infestation and decomposition amounts to an estimated 25 percent of the total catch. Examples of proj-

ects which could be developed to reduce these losses are: (1) improvement and dissemination of existing models of solar drying equipment; (2) development and installation of appropriate ice-making and cold storage facilities; (3) research into the use of chemicals for fish preservation; and (4) feasibility study of the use of biogas plants to absorb the wastes at the large fish processing centers.

Fuelwood Production. Senegal's forest reserves have been seriously depleted in recent years. Yet in the absence of viable alternatives the biomass from forests will remain a principal source of energy for the country in the forseeable future. Examples of possible projects are: (1) improvement and dissemination of low-cost energy-efficient methods of charcoal making; (2) reorganization of the charcoal industry; and (3) further expansion of existing afforestation and forest management programs.

Fertilizer Production and Use. The increased use of fertilizer planned by the Government of Senegal is a key element in the country's drive towards self-sufficiency in food grains. To encourage farmers to apply chemical fertilizer to their fields, prices are heavily subsidized by the Government; yet other methods of maintaining soil fertility could be practiced to a much greater extent than they are at present. Examples of possible projects are (1) continuing research on nitrogen fixation through non-chemical means; (2) research on improving the rate of direct absorption of phosphate rock by soils; (3) promotion of green manuring and composting practices; and (4) development of less energy-intensive fertilizer manufacturing and distribution systems.

Water Pumping. Irrigation is the second key element of the Government's plans for increased cereal production, particularly with respect to rice and wheat. Because of the terrain, irrigation water must be supplied by pumping in nearly every case. As the rising cost of oil precludes reliance solely on diesel fuel and gasoline to drive these pumps in the future, the Government has placed high priority on developing alternative technologies for pumping water based on locally-available energy resources. Exam-

ples of possible future work include: (1) financial support to build and distribute existing models of low-capacity photovoltaic and solar-thermal systems on a commercial scale; (2) refinement of large-capacity solar plants similar to the design at Bakel; and (3) windmill applications in coastal areas.

Cooking Methods and Equipment. The vast majority of Senegalese households use either wood or charcoal for cooking. Firewood is burnt directly under the cooking pot without the use of a stove, resulting in very low thermal energy efficiency. Examples of promising assistance projects are: (1) improvements in the design of charcoal stoves; (2) design and dissemination of efficient wood-burning cooking stoves; and (3) further research into the feasibility of introducing biogas plants.

Some other potential areas of concentration for energy improvement have also been examined in this study, but were given lower priority rating. These are:

- Household-level grain storage;
- Aflatoxin control;
- Groundnut shell utilization;
- Small mechanical millet processing; and
- Small mechanical rice milling.

General Conclusions

Energy profiles provide a useful accounting framework for examining the relationship between product outputs, on the one hand, and energy inputs into product transformation processes, on the other. They allow planners to make projections of energy demand under different assumptions of industrial growth, future product demand patterns, liquid fuel supply availability and price, etc. The ultimate aim of these studies is to make national plans for future energy supplies compatible with demand projections for goods and services.

Studies which deal with one sector of the economy, such as this one, must, in the final analysis, be integrated into a national energy assessment because of the close product as well as energy linkages between different economic sectors.

Chapter One

BACKGROUND

Introduction to the Study

This study of energy use and opportunities for energy-related improvements in Senegal's food system is one of several country-specific studies initiated by USAID and performed under contract to Brookhaven National Laboratory/Associated Universities, Inc. USAID's purpose in commissioning this program of studies was to identify ways and means to alleviate the most significant problems associated with the use of energy in the production, processing, distribution, and preparation of food in developing countries. To this end, the study presented herein examines the structure and energy consumption patterns of key components of Senegal's food system. It also identifies areas within that system where (1) energy savings might be achieved through the introduction of superior energy conversion technologies; (2) the use of more desirable energy sources might be promoted; or (3) increases in product output might be attained through the efficient application of additional amounts of energy. Finally, it evaluates opportunities to provide assistance in these areas in terms of potential energy impact, development impact, implementability, and uniqueness of a U.S. role.

The study is based on information available from published sources, unpublished research documents, field research, and personal interviews conducted in Senegal in late 1978 and again in the fall of 1979. In some cases the quantitative data used are not current, are incomplete, or could not be verified at the source. For the most part, however, they are considered adequate for identifying and estimating the magnitude of problems associated with the use of energy in the food system, as well as for establishing directions for further study and research.

The study contains six chapters and two annexes. The balance of Chapter One gives some basic information about Senegal and its economy. Chapter Two and Chapter Three provide overviews of the food system and the energy system, respectively. Chapter Four includes analytical profiles of energy use in the production, processing, and distribution of millet and sorghum, rice, groundnuts, and fish caught by artisanal methods, and fuel use in cooking. Chapter Five defines and evaluates potential focal points ("areas of concentration") for future energy-related activities, while Chapter Six contains the conclusions and recommendations of the study. A glossary of institutions and a bibliography of all references used in preparing the study are appended as Annex A and Annex B.

Senegal: Location, Topography, and Climate

The Republic of Senegal occupies an area of 196,722 km2 on the westernmost part of the African continent. It is bounded on the north by Mauritania, on the east by Mali, and on the south by Guinea and Guinea-Bissau. The small independent state of the Gambia extends into Senegal for about 350 km along both sides of the Gambia River, forming a partial barrier between Senegal's Casamance region and the central heartland of the country (Exhibit 1.1).

Altitudes over 100 meters are found only in extreme southeastern Senegal, the rest of the terrain being made up of flat to gently rolling savanna plains. There are four navigable rivers flowing west into the Atlantic: the Senegal, the Saloum, the Gambia, and the Casamance. Because of the relatively flat topography, these rivers are sluggish and their shallow estuaries penetrate inland for considerable distances.

The natural vegetation varies from semi-arid Sahel savanna in the north, to grassy Sudan savanna in the central region, to heavily forested Guinea savanna south of the Casamance River. Forests cover 20 percent of

Exhibit 1.1

Map of The Republic of Senegal

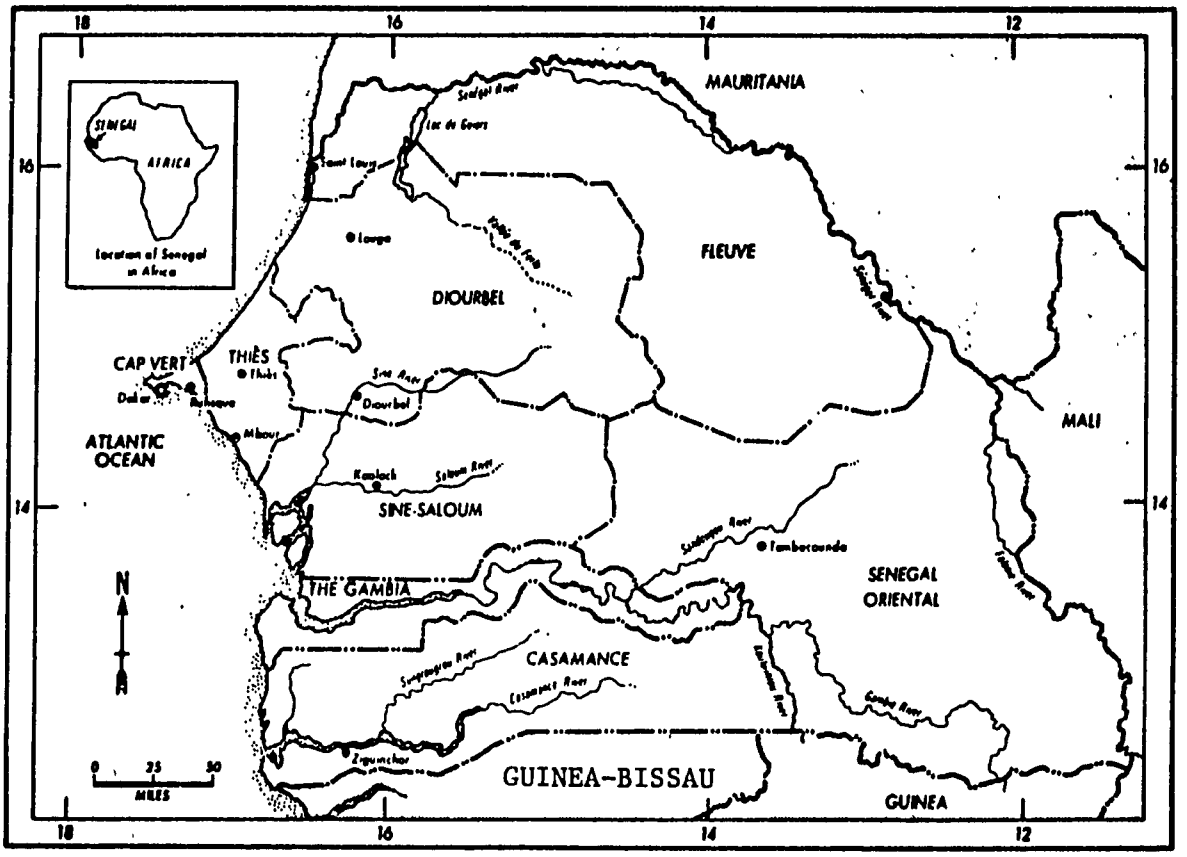

Senegal's total land area, mainly in the Casamance and Senegal Oriental. The scattered trees and shrubs found in the northern half of the country include several varieties of acacia, jujube, date, myrrh, mimosa, and dry-zone mahogany.

The climate is characterized by two well-defined seasons and an average temperature range of 18°C to 31°C. The rainy season lasts between three and six months, depending on latitude, prevailing winds, and other factors. Rainfall is subject not only to sharp annual fluctuations, but also to unpredictable timing throughout the growing season. Drought years occur in cycles: drought approximately one year in every four, and prolonged drought periods every 15 to 25 years. The most recent major drought, which began in 1968 and ended in 1973, crippled the agriculture-based economies of Senegal and other countries of the Sahel, exacted widespread human suffering and losses of livestock herds, and set in motion an international relief and rehabilitation effort which continues to this day.

Demographic Characteristics

Senegal's population, estimated at 5.5 million in mid-1979, is growing at an average rate of 2.8 percent per year. Population density ranges from five persons per km2 in Senegal Oriental to 1,540 persons per km2 in the Cap Vert region; average population density is 25 persons per km2 for the country as a whole. Sixty-five percent of the rural population lives in the Groundnut Basin east of Dakar, encompassing the regions of Louga, Diourbel, Thies and Sine Saloum. Except for clusters of population along the Senegal River and around major towns, population density is low for most of the rest of the country, and especially for the eastern portion.

About 28 percent of the population lives in urban areas, a proportion that is projected to increase to 43 percent within the next 25 years. The capital city of Dakar has over 800,000 people, approximately half the urban population. The urban growth rate averages six percent for Dakar, four

percent for secondary urban centers. Rural out-migration accounts for 40 to 50 percent of urban population growth, and the 1968-73 drought accelerated the exodus from stricken rural areas. Seasonal rural-urban movements are also commonplace in Senegal, especially during the dry months when many young men and women leave their villages to seek work in cities and towns.

Principal ethnic groups include the Wolof, the Serer, the Peul or Fulani, the Toucouleur, the Diola, and the Manding. The Wolof are concentrated in the Groundnut Basin, Cap Vert, and the Senegal River Delta, while the Serer predominate in the southern Groundnut Basin and coastal areas south of Dakar. The Diola and Manding inhabit the Casamance and Senegal Oriental. The Peul, traditionally nomadic herders, are dispersed throughout Senegal's major livestock raising areas. The Toucouleur are found mainly along the Senegal River in the Fleuve region of northern Senegal.

French, the official language of Senegal, is spoken by the literate portion (about ten percent) of the population. The "unofficial" national language is Wolof, which over 75 percent of the Senegalese speak, although other indigenous languages (Serer, Fulani, Diola) are used as well. Over 80 percent of the population is Muslim, four percent is Christian (largely the Serer), and the rest adhere to traditional animist religious beliefs.

Transportation

Senegal's transportation system include a 13,250 km road network, two railway lines, 1,500 km of seasonally navigable waterways, and a commercial deepwater port and international airport at Dakar. There are also a number of smaller ports (notably Saint Louis, Kaolack and Ziguinchor) which serve mainly the interior riverways, and some 20 domestic airports and landing strips in secondary population centers. Two main flows of goods occur: agricultural goods from the rural areas to Cap Vert; and manufactures and agricultural inputs from Cap Vert to the rural areas.

The road network was developed principally for the evacuation of the groundnut crop, as the concentration of primary and secondary feeder roads

in the Groundnut Basin shows. Only 19 percent (2,536 km) of the network is paved, another 30 percent is all-weather gravel, and the remaining 51 percent consists of ordinary earth or overland tracks which, depending on the length and severity of the rainy season, may be impassable for up to six months a year. Dakar is the hub of the road system, with paved highways extending north to Saint Louis and along the Senegal River to Matam; east to Kaffrine; and south to Ziguinchor in the Casamance region. Most roads in Senegal have been poorly maintained in recent years and are now in deteriorated condition.

Most agricultural products are handled by truck, which is the most competitive and flexible means of transport given the dispersed population and low freight levels that characterize Senegal's rural sector. The trucking industry is made up of 19 large companies, owned for the most part by expatriates, and numerous independent operators and small firms. The groundnut campaign accounts for a sizable proportion of the industry's business. The seasonal nature of the campaign, however, means that while much of Senegal's trucking capacity is underutilized between June and October, it is insufficient to meet demand between November and May when the groundnuts must be moved to the oil mills and agricultural inputs brought to rural areas in preparation for the next crop season. Other problems include inefficient scheduling of hauls, resulting in many empty backhauls, and neglect of routine maintenance due to the highly competitive rate structures which often barely cover costs.

The railways were constructed by the French primarily for transporting groundnuts. Both railway lines originate in Dakar: one runs north to Saint Louis, with a spur to the phosphate mines at Taiba; the other transects Senegal and continues into Mali. Although the trucking industry has now captured most of the groundnut trade, phosphates, petroleum products, agricultural equipment, and other heavy goods are still shipped by rail. Traffic to and from Mali accounts for about half the gross revenues of the entire rail system, which is plagued by antiquated rolling stock, poorly maintained railbeds, inadequate management, and competition from trucks and (for passengers) intercity taxi transportation.

River transport has fallen off considerably in the past 15 years, although it is still used to move agricultural produce. In the north, the Senegal River is navigable for almost 1,000 km. inland at the height of the rainy season (August and September), but for only 275 km inland in the dry months of December to June. Recent plans for developing the Fleuve region have stressed the rennaissance of river transport, although such will depend on the construction of dams to ensure adequate water levels on the Senegal River. The Saloum and Casamance Rivers can be navigated by small ships for 118 km. and 178 km. respectively, and at one time a significant volume of import-export trade was handled through ports on these waterways. In recent years, however, traders have tended to favor overland shipments via Dakar at the expense of river transport, largely for cost considerations.

In the rural sector, transport (apart from human porterage) is effected mainly by ox and horse-drawn carts. Much of the groundnut crop is moved a distance of five to ten km from field to the cooperative by animal carts, and there exists an active rental market for this service. Small amounts of grain, vegetables, and other produce are brought to rural and urban markets in trucks operated by private traders (bana-bana men), and sometimes in traditional dug-out canoes (pirogues). Small busses (car rapides) and bush taxis (taxis brousses) provide the major passenger transportation links between the cities and towns, and may also be relied upon by small-scale traders for the transport of agricultural goods.

Government and Economy

Senegal has a presidential system of government, with a strong executive and a unicameral legislature. The president, elected every five years by universal suffrage, appoints the prime minister, cabinet, supreme court judges, and the governors of the country's eight administrative regions.1/ Most statistical reporting is done on a regional basis.

1/ Cap Vert, Thies, Diourbel, Sine-Saloum, Casamance, Senegal Oriental, Fleuve, and Louga. Louga was part of the Diourbel region until 1976.

Gross National Product (GNP) in 1977 was $2.24 billion, or about $430 per capita. World Bank economic data for 1970-77 show an average annual growth in real Gross Domestic Product (GDP) of 2.8 percent, which is only slightly higher than the population growth rate. The annual rate of inflation, which averaged only 1.6 percent throughout the 1960's, reached 12.1 on the average between 1970 and 1976.

The service sector accounts for about 48 percent of Senegal's GDP, agriculture for 28 percent, and industry for 24 percent. Industrial activity, concentrated in the regions of Cap Vert and Thies, has expanded rapidly over the past ten years. Food processing and phosphate mining enterprises contribute nearly 60 percent of value-added by the industrial sector.

The economy of Senegal is heavily import-export oriented. The average annual value of merchandise exports, principally groundnut oil, phosphates, fish, and refined petroleum products rose 7.2 percent per year between 1970 and 1977. This compares with an average annual growth rate for imports, mainly foodstuffs, crude oil, and manufactured goods, of 5.1 percent. While Senegal's terms of trade have been improving (the 1976 index was 110 on a 1970 base of 100), exports still cover only 78 percent of imports in an average year. The trade deficit in 1977 was $150 million.

Exhibit 1.2 presents selected development indicators for Senegal, based on World Bank and U.S. Government data. More detailed information on the economic aspects of the country's food and energy systems are presented in the next two chapters of this report.

Exhibit 1.2

Senegal: Selected Development Indicators

Population		
1979	5.5	million
Annual Average Growth Rate, 1970-9	2.8	percent
Gross National Product (GNP)		
1977	$2.24	billion
Per Capita, 1977	$430	
Gross Domestic Product (GDP)		
Annual Average Growth Rate, 1970-77	2.8	percent
Percentage Distribution, 1976: Agriculture	28	percent
Industry	24	percent
Services	48	percent
Merchandise Trade		
1977 Exports, FOB	$520	million
1977 Imports, CIF	$670	million

Source: IBRD. World Development Report, August 1979.

INTENTIONALLY
LEFT
BLANK

Chapter Two

FOOD SYSTEM OVERVIEW

Introduction

Agriculture is the mainstay of Senegal's economy, directly accounting for some 30 percent of gross domestic product and 70 percent of total employment in recent years. It provides most of the raw materials for the domestic food processing industry, which is the largest component of the industrial sector and generates about 40 percent of the total value of manufacturing output in Senegal. Of even greater significance is the contribution of food-based industries to export earnings; groundnut products typically make up 40 to 45 percent of the total value of Senegalese exports, with fish and vegetable product exports supplying an additional eight to ten percent of the annual total (Exhibit 2.1).

Food is also the largest import category in Senegal's foreign trade accounts, amounting in most years to between 20 and 30 percent of total imports. Sugar, rice, and wheat are the leading foods imported followed by dairy products, fruits and vegetables. Annual food grain imports seldom fall below 300,000 metric tons -- or between 30 and 40 percent of all grain consumed in Senegal -- due to high levels of urban demand for rice and wheat that cannot presently be satisfied by domestic production even in the best of years. In years when domestic harvests are adversely affected by the weather, imports of rice, wheat, and other cereal staples rise. Unfavorable weather conditions further strain the country's balance of trade by reducing groundnut yields, thereby limiting the amount of groundnut oil available for sale on export markets.

Exhibit 2.1

Senegal: Foreign Trade in Food Products, 1975

	Value (millions)	Share (percent)
EXPORTS		
Groundnut Products	$ 174.2	40.4
Fishery Products	31.6	7.3
Fresh Vegetables	3.4	0.8
Subtotal Food Products	209.2	48.5
Other Exports	221.8	49.5
Total Exports	$ 431.0	100.0
IMPORTS		
Sugar	$ 33.0	6.1
Rice	26.3	4.9
Wheat	20.1	3.7
Dairy Products	10.5	1.9
Fruits and Vegetables	10.1	1.8
Oils and Fats	6.2	1.1
Other Food Products	10.8	1.9
Subtotal Food Products	117.0	21.6
Other Imports	424.8	78.4
Total Imports	541.8	100.0

Source: "Senegalese Industry," Marchés Tropicaux et Méditerranéens, 1684 (February 17, 1978).

The agricultural sector has undergone a number of shocks over the past 15 years. Per capita food production has been declining since independence. Loss of protection for Senegalese groundnuts in French markets seriously disrupted the economy in 1967/68. Foreseeing this, the Government had earlier sought to increase agricultural productivity, mainly through the use of improved inputs and technical assistance. However, the drought which followed the loss of preferential pricing frustrated these sectoral development efforts. Crop and livestock production fell dramatically, industrial unemployment rose, the balance of trade deteriorated, and rural per capita incomes declined, in turn accelerating the rate of rural migration to the cities. In the aftermath of the extended drought of 1968-1973, the Government stepped up the level of investments in the rural sector, and re-evaluated its agricultural pricing policies as well.

The remainder of this chapter provides an overview of Senegal's food system, with emphasis on the production, processing, distribution, and consumption of basic food commodities. Macroeconomic data on production trends, the processing and distribution system, and domestic food consumption and nutrition are presented, followed by a discussion of climate and soil conditions, current land use and cropping patterns, and the institutional and social framework within which the agricultural production takes place. The section concludes with a brief analysis of the Government's plans and priorities for development of the sector. More detailed information on four of the most important commodities in the food system (rice, millet/ sorghum, groundnuts, and fish) are presented in Chapter Four.

A. FOOD CROP CHARACTERISTICS: PRODUCTION TO CONSUMPTION

Crop Production

Crop production contributes 58 percent of value added by the primary sector in Senegal, livestock 19 percent, fishing 16 percent and forestry 7 percent (Exhibit 2.2). Groundnuts and several varieties of millet and

Exhibit 2.2

Senegal: Composition of Value-Added by Primary Sector, 1975

	1975		
	Value (millions)	Sector Share (percent)	Subsector Share (percent)
Crops:			
Cereals	$ 100.9	20.2	34.7
Other Food Crops	30.9	6.2	10.6
Groundnuts	148.3	29.7	51.0
Other Industrial Crops	10.9	2.2	3.7
Subtotal	291.0	58.2	100.0
Livestock:			
Cattle	47.8	9.6	52.1
Sheep and Goats	14.3	2.9	15.7
Poultry	20.4	4.1	22.3
Pigs	4.3	0.9	4.7
Other	4.8	1.0	5.2
Subtotal	91.6	18.4	100.0
Fishing:			
Artisanal Maritime Fishing	57.8	11.6	71.9
Industrial Fishing	19.1	3.8	23.8
Artisanal Inland Fishing	3.5	0.7	4.3
Subtotal	80.4	16.1	100.0
Forestry: Subtotal	36.5	7.3	
Total Primary Sector Value Added	$ 499.5	$ 100.0	

Source: World Bank. Values converted to U.S. dollars at exchange rate of $1.00 = 230 francs CFA.

sorghum are the principal crops, accounting for about four-fifths of the total area under cultivation (Exhibit 2.3). Rice is the staple food crop in the Casamance region, and is also being produced on irrigated projects in the north for urban consumption, while maize is raised in the Casamance, Senegal Oriental, and Fleuve. Recently, the Government has been encouraging the production of sugarcane, tomatoes, cotton, and fruit with a view toward diversifying agriculture in the country and providing raw materials for domestic processing industries. The substitution of domestic products for imported sugar, tomato paste, and cotton cloth, all of which figure prominently in Senegalese household budgets, forms part of an ongoing program to reduce Senegal's foreign trade deficit.

Exhibit 2.4 shows trends in tonnage production for each of the major types of crops grown in Senegal. Five-year averages for 1961-65, 1966-70, and 1971-75 have been used in order to minimize the effect of drought years on the production data. With the exception of cotton and confectionary groundnuts,1/ which were not introduced as commercial crops in Senegal until the mid-1960's, there has not been much change in land use patterns or average yields during the past 15 years. Groundnuts and millet continue to dominate, followed by root and bean crops, rice paddy, and maize.

Fluctuations in year-to-year production totals can be attributed primarily to weather conditions, and secondarily to some tendency on the part of farmers to substitute among crops in response to government pricing and marketing policies.2/ These policies control the sale of groundnuts, cot-

---

1/ Confectionery groundnuts (arachides de bouche) are hand-picked, selected nuts which may be roasted or used in the manufacture of peanut butter and bakery products.

2/ For example, it has been claimed that substitution of groundnuts for unirrigated rice paddy in the Casamance and for cotton in Senegal Oriental has been encouraged by the Senegalese Government's uniform pricing policy for groundnuts, which ignores variations in transport costs to the oil mills from different regions of the country.

Exhibit 2.3

Senegal: Average Area Harvested by Crop - 1970-1974

Crop	Harvested Area (thousand ha)	Share of Total Harvested Area (percent)
Groundnuts	1,048	43.4
Millet/Sorghum	969	40.2
Rice	72	3.0
Peas/Beans	66	2.7
Roots/Tubers	42	1.7
Maize	40	1.7
Seed Cotton	23	1.0
Other Crops	152	6.3
Total	2,412	100.0

Source: International Fertilizer Development Center, West Africa Fertilizer Study, Volume Two: Senegal, Florence, Alabama, 1977

Exhibit 2.4

Senegal: Trends in Tonnage Production, by Crop

Crop Category	Average Annual Production (thousand tons)		
	1961-1965	1966-1970	1971-1975
Cereals	(574)	(712)	(654)
Millet and Sorghum	446	543	524
Rice Paddy	94	117	87
Maize	30	43	35
Fonio	4	9	8
Roots and Beans	186	244	202
Vegetables and Fruits	138	163	155
Groundnuts	(945)	(926)	(772)
Oil	945	921	762
Confectionery	-	5	10
Seed Cotton	-	6	27
Palm Kernel	18	20	22

Source: World Bank.

ton, millet, and rice paddy through legal channels, although some production is sold illegally through the traditional distribution network. Prices are set by the government, and the producer is paid once the yield has been marketed -- a lag time of up to three months after he delivers his crop to official weighing stations. Exhibit 2.5 shows the official prices paid to producers for the 1976-77 crop year.

Government profits from the sale of groundnuts, cotton, sugarcane, and imported rice are in part rechannelled into price subsidies on fertilizers, agricultural equipment, and certain consumer foodstuffs, such as groundnut oil and wheat flour. Consumer subsidies on imported rice were eliminated in late 1974, although the Government still stabilizes imported rice prices to adjust for short-run fluctuations. The Government also subsidizes domestic rice production, processing and distribution.

Exhibit 2.5

Senegal: Official Producer Prices Paid by Crop, 1976-1977

Crop	Producer Price/ton
Oil Groundnuts	$180
Confectionary Groundnuts	$180-261
Millet	$152
Cotton	$ 96-204
Rice Paddy	$180

Source: Senegal, Ministry of Planning and Cooperation, Fifth Four-Year Development Plan, June, 1977. Prices converted to U.S. dollars at exchange rate of $1.00 = 230 francs CFA.

Livestock

Two percent of the population of Senegal depends on nomadic or semi-nomadic herding for its livelihood, another eight percent engages in some combination of stockraising and cultivation, and fully 50 percent keeps some animals. Livestock provides draft power on farms, supplies hides for tanning and export, and produces limited amounts of meat and milk for domestic consumption. However, Senegal continues to be a net importer of meat and dairy products, and there are also significant movements of cattle which come over the border from Mauritania without passing through official trade channels.

Within the livestock industry, the greatest proportion of value added derives from cattle production. In 1970, there were an estimated 2.6 million head of cattle in Senegal, but the Sahelian drought subsequently cut the herd size by an estimated 12 percent and it is only now regaining its pre-drought strength. Cattle productivity is low by international standards; the percentage of females calving is under 60 percent, and 30 to 40 percent of the calves die during their first year. Carcass weights at slaughter average under 150 kgs., compared with weights of up to 350 kgs. for animals fed on feedlots.

Fishing

Since Senegal became independent in 1960, fishing has been one of the most rapidly growing subsectors of its economy. According to official government statistics, annual production rose nearly fourfold between 1960 and 1976, and its value (at constant 1971 prices) increased by over 200 percent. By the mid-1970's, the fishing industry was contributing 16 percent of all value added by the primary sector, up from 5.8 percent in 1960 and 7.5 percent in 1965. The artisanal maritime segment of the industry generates about 72 percent of the total value of the fishing catch, and industrial fishing accounts for 24 percent. The balance of 4 percent is attributed to inland river fishing.

The Processing and Distribution System

For purposes of this discussion, the processing and distribution system encompasses the range of functions that lie between actual food production and final preparation of food for human consumption. These include transportation, processing of various kinds, storage, packaging, and wholesale and retail distribution. There are two parallel processing and distribution systems in Senegal. One is the traditional system, where processing is performed at the farm or village level, usually by hand, and the product is either stored for on-farm consumption or sold in nearby market towns. The other can be termed the industrial system, in which raw products are transported to major urban areas for processing and distribution by modern commercial enterprises, many of which are foreign-owned.

The traditional system handles most of the staple foods produced in Senegal, including millet, sorghum, roots and tubers, peas and beans, fish caught by artisanal methods, and a significant portion of the rice and livestock. Millet production not retained for on-farm use is supposed to be marketed through official Government channels, but less than five percent of the total crop is actually handled in this manner. Surplus paddy produced on Government projects is taken to one of four industrial rice mills for processing prior to distribution through commercial networks, largely in urban areas.

In addition to the rice mills, the industrial system consists of the groundnut oil factories, some 20 firms engaged in processing and distributing the industrial fishing catch, two large grain mills (mainly for wheat flour, but also some millet), a sugar refinery, several vegetable canning plants, and various enterprises involved in manufacturing sweets, beverages, biscuits, and assorted condiments. There are also firms that process imported dairy products, although there are no dairies and only one major slaughterhouse for cattle.

Exhibit 2.6 presents data on output and value-added for selected types of food processing firms in Senegal, drawn from a census of business enterprises conducted in 1975. Not reflected in these data are the activities of private and Government-owned corporations that provide food transportation, storage, and marketing services independent of the processing industry. Aside from ONCAD, the Government groundnut, millet, and rice trading monopoly, the most important of these are SONACOS (Société Nationale des Oléagineux du Sénégal), a mixed enterprise owned by the Government and the oil factories and charged with the sale and export of manufactured groundnut products, and the CSS (Compagnie Sucrière Sénégalaise), which has a monopoly on distributing domestic and imported sugar and is also involved in producing and processing sugarcane.

Domestic Food Consumption and Nutrition

Available data on food consumption patterns in Senegal show the importance of cereals as a source of energy and protein in the national diet. According to Government estimates (Exhibit 2.7), cereals accounted for 67 percent of average daily per capita calorie intake in 1974, rising to 75 percent in rural areas. Comparable figures for protein were 57 and 67 percent.

Except in the Casamance where domestically-grown rice is preferred, millet and sorghum are the staple food grains in rural areas and represent nearly half of all cereals consumed in Senegal. In urban areas, imported rice is the staple food. Imported wheat (in the form of bread) and maize are other important cereals in the Senegalese diet. Preference for imported grains in cities is linked to the relative ease of preparation of these cereals compared with traditional millet and sorghum (which is handpounded), as well as to policies which subsidize or control the prices of rice and bread, which make these commodities attractive to consumers.

Exhibit 2,6

Senegal: Output and Value Added for Selected Food Processing Industries, 1975

Type of Firm	Number of Firms	Production (millions)	Value Added (millions)
Fish Processing Plants (canning, curing, freezing, fishmeal production)	15	$ 46.5	$ 7.9
Oil Processing Plants (oil, cake, soap, vinegar, and perfume manufacture)	5	201.0	36.8
Flour Mills and Bakeries	44	50.0	10.1
Sugar Refineries and Confectioneries	7	57.1	23.5
Miscellaneous Food Industries (milk and cheese processing, brewing, ice manufacture, commercial vegetable and livestock processing)	14	35.2	13.6

Source: SONED, Les Activités du Secteur Economique Moderne au Sénégal en 1974 et 1975 d'après les Résultats du Recensement Général des Entreprises, Dakar, June 1977.

Exhibit 2.7

Senegal's Food Balance Sheet, 1974

	Total for Senegal	Rural Sector	Urban Sector
Population (millions)	4.8	3.3	1.5
Per Capita Consumption in kg/year:			
Cereals	149	153	153
Rice	54	37	91
Millet and Sorghum	73	97	21
Daily per Capita Calorie Intake from Cereals	1,491	1,549	1,363
Daily per Capita Total Calorie Intake	2,210	2,068	2,495
Daily per Capita Calorie Intake of Animal Origin	170	68	367
Daily per Capita Consumption of Proteins (grams)	68	58	87
Daily per Capita Consumption of Proteins of Animal Origin (grams)	22	10	45
Daily per Capita Consumption of Proteins of Cereal Origin (grams)	39	39	37

Source: World Bank.

FAO forecasts of food requirements to 1990 (Exhibit 2.8) assume a continuation of growth in demand for rice and wheat. Whereas per capita consumption of millet and sorghum are expected to remain relatively constant, rice and wheat consumption per capita are expected to grow by eight and 34 percent respectively over 1970 levels. Growth is also anticipated in per capita intake of sugar (35 percent), fruits and vegetables (12 percent), meat products (18 percent), and fish (10 percent). Consumption of root and tuber crops (potatoes, sweet potatoes, cassava), on the other hand, is expected to decline by slightly more than three percent per capita.

Comparison of rural and urban food intake data for 1974 (Exhibit 2.7) indicates that urban dwellers consume, on the average, nearly 20 percent more calories and 17 percent more protein per day than their rural counterparts. Moreover, the animal protein content of urban diets is about four times greater than the average for the rural sector. Dried or fresh fish, which is often used in sauces to accompany millet, sorghum, or rice, is far more important than meat as an animal protein source.

The 1974 data on overall rural food balances show average energy intakes very close to the recommended minimum per capita requirement of 2,100 calories per day. However, these averages conceal considerable disparities in levels of nutrition by season, income, sex, and age group. Surveys of rural and semi-rural districts in the Groundnut Basin have revealed serious calorie shortfalls during the crop production season (mid-summer through October), when stores from the previous year's harvest have been depleted and before the current year's crop is ready to reap. Of even greater significance is that this period of hunger (known in Senegal as the soudure) falls during a time of year when large amounts of human energy must be expended on strenuous agricultural production and harvesting activities. In another survey, the daily caloric intakes of young children, pregnant women, and nursing mothers were found to be well below the minimum levels needed for normal growth and development (Exhibit 2.9). Nutritional deficiencies have also been noted among Senegalese children and adults who, while enjoying diets which meet or exceed per capita energy requirements,

Exhibit 2.8

Projected Changes in Per Capita Consumption of Basic Foods in Senegal: 1970-1990

	Estimated Per Capita Consumption (kg)1/		Percentage Change
	1970	1990	
Miliet/Sorghum	94.3	98.0	+ 3.9
Rice	55.8	60.2	+ 7.9
Wheat	22.4	30.2	+ 34.8
Maize	15.8	16.4	+ 3.8
Roots and Tubers	40.3	39.0	- 3.2
Beans/Peas	5.4	5.8	+ 7.4
Vegetables	13.2	14.8	+ 12.1
Sugar	18.1	23.4	+ 29.3
Groundnuts	8.9	9.4	+ 5.6
Fruit	9.4	10.5	+ 11.7
Meat	16.6	19.6	+ 18.1
Fish	39.2	43.1	+ 9.9

1/ Data for 1970 are based on estimates of actual consumption per capita. 1990 projections assume a one percent annual increase in per capita food expenditures and consequent changes in elasticity of demand.

Source: FAO, Etude prospective pour le développement agricole des pays de la zone sahelienne: 1975-1990, Rome, 1976.

suffer from endemic diseases that reduce the efficiency with which their bodies are able to absorb and utilize this food.

Exhibit 2.9

Percent of Per Capita Energy Intake Requirements Satisfied, by Selected Seasons and Vulnerable Groups

Category	Percent of National Requirements
Rural Villagers (Thies, 1966)	
January-March	97
May-June	90
August-October	75
Rural Villagers (Sine-Saloum, 1968)	
January-March	104
May-June	92
August-October	88
Vulnerable Groups (1970)	
Children (1-3 years)	74
Children (4-6 years)	70
Adult Women	99
Pregnant Women	88
Nursing Mothers	82

Source: FAO, op. cit., based on government survey data.

B. PHYSICAL AND INSTITUTIONAL FACTORS IN AGRICULTURE

Physical and Land Use Characteristics

The various agricultural zones of Senegal may be distinguished by differences in climate, soil conditions, population density, cropping patterns, and most importantly, the availability of water resources. This

section presents a brief description of the physical factors affecting agricultural land use and the cropping patterns prevailing within each zone.

Rainfall and Soil Conditions

A key determinant of agricultural land use in Senegal is rainfall, the total amount, seasonal distribution, and variability of which are critical to crop production. Mean annual rainfall varies from under 400 mm in the far northern part of the country to 1500 mm in the Lower Casamance (Exhibit 2.10). The Groundnut Basin receives between 600 and 1000 mm of rainfall on the average, but in some years gets less than half this amount. There is a well-defined rainy season, running from late June to October in most parts of the country, and the rest of the year is dry. This limits the productivity of the land to a single growing season, except in areas where irrigated or flood recession agriculture is practiced. Rainfall can also be unevenly distributed throughout the growing season, as when the bulk of annual rainfall falls within just a few short weeks, which will further limit crop production.

Soil conditions in Senegal are influenced by rainfall, geology, and the intrusion of salt into the country's major river systems. The soils in the Groundnut Basin are predominantly sandy, with low fertility and water-holding capacity, and are best suited to rainfed millet and groundnut cultivation. Sandy soils also prevail in most of the Casamance region, but they are deeper and finer than those found further north and are suitable for a variety of crops. Rich bottomland soils are located in alluvial areas along the Senegal River and in coastal Casamance. These have good potential for rice production subject to salinity control.3/ The rest of

---

3/ It is generally assumed that problems of salinity intrusion can be resolved by constructing salt-water barrier structures at the mouths of rivers or inlets. However, care must be taken to ensure that enough moisture is supplied to sulphide soils to prevent acidification during periods of drought. The Netherland's development assistance agency, ILACO, concluded from its experiments with barrier dikes in the Casamance that it was better to permit the intrusion of saline water than to let the pH value of the soils drop below 2 from lack of moisture.

Exhibit 2.10

Senegal: Mean Annual Rainfall (in mm.)

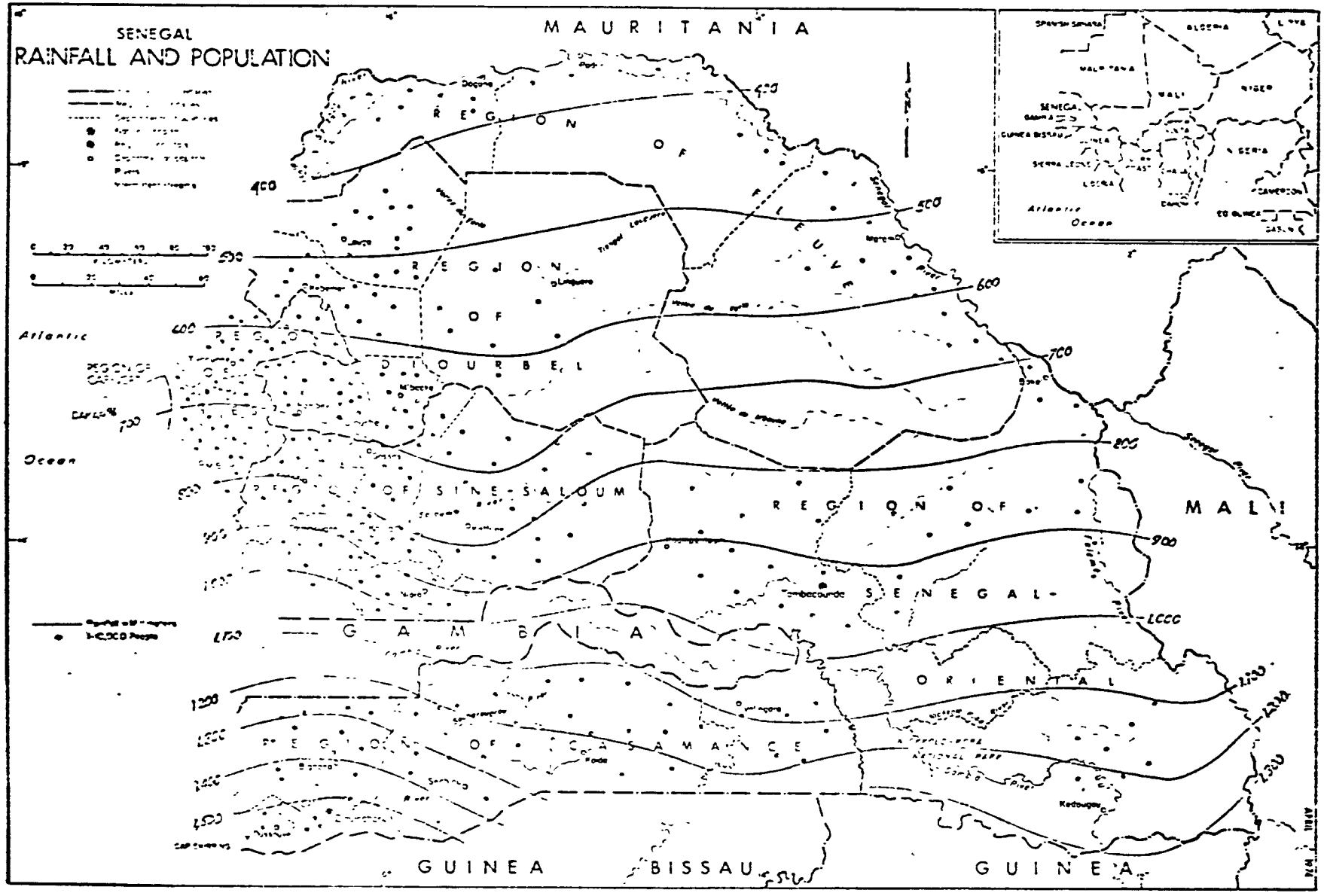

Source: IBRD, Senegal: Tradition, Diversification, and Economic Development, Washington, 1974.

the country is made up of soils which, while potentially productive, have a high clay content and are difficult to work by hand, or of soils that are too thin for agricultural use but may, in some cases, be appropriate for grazing.

Soil (and wind) erosion, reflecting the destruction of the natural groundcover due to drought, over-grazing, poor farming practices, and excessive felling of trees for firewood, is a serious problem in Senegal. Especially in the Sahelian part of the country where precipitation is low, erosion has been an important contributing factor to the process of desertification, in which potentially productive areas are transformed into impoverished wastelands unsuitable for cultivation or grazing. While only a small percentage of Senegal's total land area now falls within this category, this percentage can be expected to grow unless remedial measures are taken to protect the fragile ecosystem of the Sahel from further encroachment by the desert.

Water Resources

Underground aquifers in Senegal range in depth from less than 20 meters to 500 meters or more. Throughout most of the Casamance water is available less than 30 meters from the surface, while in the Groundnut Basin and Senegal Oriental it can usually be found at depths of 30 to 50 meters.

The Sahelian drought lowered the water table in Senegal, drying up wells and watering holes in much of the northern half of the country. The Government is now working to improve water supply for village, agricultural, and livestock use by drilling new wells and equipping existing ones with manual or motor-driven pumps.

The Senegal River provides water for agriculture in the northern Fleuve region where rainfall is extremely low (400 mm per year) and where traditional flood-recession agriculture is practiced between October and

February. The mean rate of flow of the Senegal River over the past 70 years has been 764 m3 per second. However, this flow is extremely uneven, ranging from 3,500 m3/second at the peak flood in September to as low as 6 m3/second in May and early June.

Projects are underway to regulate the flow of the Senegal River through construction of two dams, the first at Manantali in Mali and the second at Diama in the river Delta.4/ Depending upon decisions yet to be made on the use of the dam for irrigation as distinct from power generation purposes, Manantali may make irrigated production possible on some 225,000 hectares along the Senegal River. The Diama dam will irrigate between 30,000 and 60,000 hectares in the Delta region of the river and also control the upstream flow of saline waters which limit rice production there now. However, once these dams are built, all agriculture in the region must rely on irrigation, as flood recession cultivation techniques will no longer be possible.

Other water management projects are planned or under study for the Casamance, Saloum, and Gambia River basins. In all, it is expected that a total of 500,000 hectares will be available for irrigated agriculture within the next 30 years.

Land Use and Cropping Patterns

Approximately 2.4 million hectares, or 13 percent of Senegal's total land area, are planted each year in cash and subsistence crops. The majority of the existing cropland (75 percent) is located in the Groundnut Basin, which lies within the administrative regions of Diourbel, Louga,

---

4/ The Manantali project is the first phase of a long-term regional development program to exploit the waters of the Senegal River under the auspices of OMVS (Organisation Pour la Mise en Valeur du Fleuve Sénégal), a tri-state regional commission representing the Governments of Mali, Mauritania, and Senegal.

Thies, and Sine Saloum. The Casamance accounts for an additional 13 percent of the area under cultivation, and the sparsely-populated Fleuve and Senegal Oriental regions make up most of the balance (Exhibit 2.11). These three outlying regions have considerable unexploited potential for rainfed farming, estimated to exceed three million hectares. There is also good potential for increasing the area under irrigation in the Senegal River basin and parts of the Casamance.

Exhibit 2.11

Senegal: Distribution of Cultivated Area, by Region

Administrative Region	Cultivated Area (thousand ha.)	Percent of Total
Diourbel/Louga	641.8	26.6
Thies	361.6	14.2
Sine-Saloum	836.0	34.6
Casamance	320.1	13.3
Senegal Oriental	167.3	6.9
Fleuve	100.1	4.2
Cap Vert	5.7	0.2
Total	2,412.6	100.0

Source: Evolution et Perspectives du Secteur Rural dans le Cadre de la Préparation du Ve Plan Quadriennal, Dakar, 1976.

The Groundnut Basin itself consists of three distinct sub-regions. The Northern Groundnut Basin (Louga and the northern half of Diourbel) is the most thinly populated and least productive of the three for reasons which include inadequate rainfall and poor soils exhausted from several

centuries of overuse. Short-cycle millet, cowpeas, cassava, and groundnuts are grown under conditions of high risk and, because of low levels of rainfall, fertilizer use is seldom profitable.5/ Further development in this sub-region is linked to the introduction of short-cycle groundnuts and livestock raising.

Land is the limiting factor of production in the Central Groundnut Basin (Thies, southern Diourbel, and northern Sine-Saloum), which is the most densely populated and densely cropped area in all of Senegal. Cropping patterns are similar to those prevailing in the Northern Basin, except that stockraising is often integrated with crop production and, because rainfall is somewhat more abundant, crops are more responsive to fertilizer use. Nevertheless, soils in this sub-region are becoming overworked as well, due partly to land limitations, which have reduced traditional fallow periods, and partly to poor farming practices on the part of the Wolof farmers who predominate in the Central Groundnut Basin.

The Southern Groundnut Basin (most of Sine-Saloum) is the best watered of the three sub-regions. Yields per hectare average 15 to 20 percent higher than in the drier parts of the Basin, and conditions are suitable for producing cotton, tobacco, and maize as well as groundnuts and millet. In addition, the major ethnic group in this part of the Groundnut Basin (the Serer) traditionally has employed techniques such as crop rotation, tree planting and animal manure applications to preserve the fertility of the soils.

South of the Gambia, the upper, middle, and lower parts of the Casamance region have good potential for agricultural development due to ade-

---

5/ See Wesley G. Smith, "Etude Engrais au Sénégal" (SODEVA, May 1975). In his study for the World Bank, Smith found that the efficacy of fertilizer use depended mainly on rainfall, but also that the drought had had less effect on the decline in use of fertilizer than had increases in the price of fertilizer relative to groundnuts.

Exhibit 2.12

Senegal: Agricultural Zones

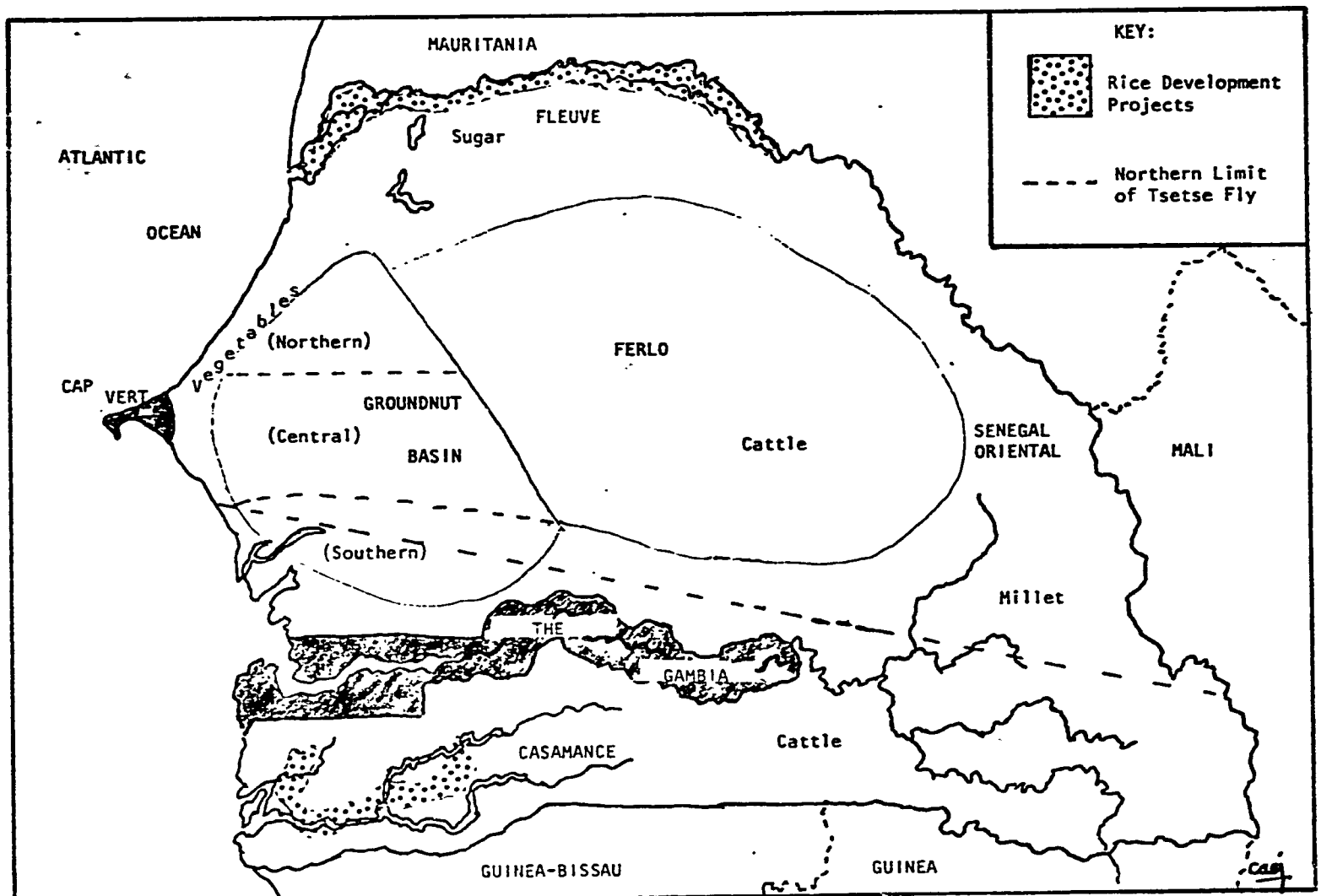

quate rainfall, relatively fertile soils, and low population density. Crops include sorghum and late-season millet, groundnuts, upland and swamp-land rice, and smaller quantities of cotton and maize. There is also some production of trypano-tolerant cattle in the easternmost portion of the region.

Most of Senegal Oriental receives adequate amounts of rainfall over a comparatively lengthy rainy season. Groundnuts, millet, and maize are the principal crops. Some cotton has been successfully introduced in the southern part of the region, and cattle are raised beyond the northern reaches of the tsetse fly zone (see Exhibit 2.12). Only about ten percent of the potentially arable land is actually under cultivation due to the region's lack of infrastructure and insufficient population base. The Government is encouraging new settlements in Senegal Oriental through its "New Lands" (Terres Neuves) program, which provides technical and material assistance to migrants from the overcrowded Groundnut Basin.

The Fleuve region encompasses the entire Senegal River Valley and Delta from Bakel downstream to St. Louis. It also includes part of the adjacent Ferlo or sylvo-pastoral zone, a semi-arid region, best suited to extensive livestock grazing and acacia gum cultivation, which stretches beyond the river valley to the northeastern edge of the Groundnut Basin. Within the valley itself, traditional agriculture is highly dependent on the annual flooding by the Senegal River of the alluvial lowlands, which are farmed under a system of dry season flood recession cropping called oualo. Rainfed cropping (called dieri) is also practiced in the Fleuve region on lands adjacent to the river, but not subject to flooding. Millet, sorghum and maize are the traditional crops. On the large irrigated perimeters, rice is cultivated in the rainy season, and maize and vegetables (mainly tomatoes and some peppers) in the dry season. Sugarcane is produced at Richard-Toll. River fishing supplies animal protein for local consumption and sale.

Exhibit 2.13 provides estimates developed by the World Bank in 1974 of the number of farming units in each of Senegal's main agricultural regions

and the net value of crop production per unit. Farms in the Southern Groundnut Basin, Senegal Oriental, and the Casamance are shown to be relatively more prosperous than those in other regions of the country, reflecting the effects of climate, farming practices, and soil conditions on productivity.

Not included in Exhibit 2.13 are data for stockraising, fishing, and commercial vegetable production. These activities account for a significant proportion of the income generated by agriculture to residents of the two remaining regions of the country: the Ferlo (sylvo-pastoral) zone and the Cap Vert coastal district.

Exhibit 2.13

Senegal: Estimated Number of Farm Units, Average Size/Unit, and Net Value of Crop Production by Region

Agricultural Region	Number of Units	Average Cultivated Area/Unit (ha.)	Net Value of Crop Production/Ha.
Northern Groundnut Basin	80,000	6.0	$ 49
Central Groundnut Basin	57,000	6.0	67
Southern Groundnut Basin	77,000	10.4	86
Casamance	77,000	4.2	120
Senegal Oriental	37,000	4.0	89
Fleuve	31,000	4.8	66

Source: World Bank. Data are rough estimates only and exclude production on large farms operated by Moslem Brotherhoods and commercial farming ventures. Values are based on producer prices for 1974/75 crop season.

Institutional and Socio-Economic Framework

This section describes the organization of services6/ to the agricultural sector in Senegal and the socio-economic structure of the typical production unit. Constraints and issues affecting prospects for intervention in the food production system are also noted.

Agricultural Policy and Service Organizations

Government intervention in the agricultural sector is on three levels: national, regional, and local. At the national level, the Ministry of Rural Development (Ministère du Développement Rurale et de l'Hydralique, or MDRH) formulates agricultural policy, plans overall development strategy for the sector, and supervises the activities of the other agencies charged with strategy execution. The Directorates of Agriculture (Direction Générale de la Production Agricole, or DGPA), Livestock and Animal Industries, Water and Forestry, Oceanography and Maritime Fishing, and Agricultural Engineering all come under this Ministry.

MDRH works in conjunction with the Ministry of Planning (Ministere du Plan et de la Cooperation, or MPC) to prepare that portion of the national development plan which deals with the rural sector. The Secretariat for Scientific and Technical Research (Secrétariat d'Etat à la Recherche Scientifique et Technique, formerly Délégation Générale à la Recherche Scientifique et Technique, or DGRST) also contributes to the sector plans by outlining research priorities for agriculture. Agricultural research is directed by the Senegalese Agricultural Research Institute (L'Institut Sénégalais de Recherches Agricoles, or ISRA) and carried out at its research stations in several regions of the country, and especially at the National Agricultural Research Center (Centre Nationale de Recherche Agricole, or CNRA) in Bambey.

MDRH oversees the operations of ONCAD (Office Nationale de Coopération et d'Assistance pour le Développment), which serves as the state marketing

---

6/ A partial listing of Senegalese institutions related to agriculture or energy is given in Annex A.

board and as a major link between the Government and the farmers. ONCAD's most important function is the purchase, collection and marketing of groundnuts, which it sells to SONACOS (Société Nationale des Oléagineux du Sénégal) for resale to the local oil mills. ONCAD also has the monopoly for importing rice and distributing it to licensed traders. On a much smaller scale, ONCAD markets local grains, including millet, sorghum, maize and domestically-produced rice. Improved agricultural inputs (selected seeds, fertilizers, pesticides, and animal-drawn equipment) are purchased by ONCAD with funds advanced from the Senegalese Development Bank (Banque Nationale de Développement du Sénégal, or BNDS) and distributed through either the farmer cooperatives or the regional land development agencies. ONCAD's other major function is the organization and administration of the cooperatives themselves.

All agricultural credit comes from the BNDS, which is funded in part by foreign assistance (in the past, largely by France's Caisse Centrale de Coopération Economique, or CCCE, and the World Bank's IDA). Debt limits are set according to the combined outstanding debt of each cooperative's members, and not on an individual basis. ONCAD is reimbursed for its purchases of agricultural inputs out of the Price Stabilization Fund (Caisse de Péréquation et de Stabilisation des Prix or CPSP), which is supported by the profits from ONCAD's groundnut marketing and rice import activities and SODEFITEX's cotton sales. CPSP revenues are also used to finance subsidies on agricultural inputs and basic consumer commodities (groundnut oil, sugar, wheat flour and, until 1974, imported rice).

The parastatal land development agencies are public corporations which were created to implement crop and livestock development programs in Senegal's principal agricultural regions. Legal status of these agencies differs; some are mixed corporations, with state and private financing (e.g., SODEVA and SODEFITEX), while others are wholly state-owned (e.g., SAED and STN). Those which are state-owned are subject to Government controls on personnel, administration and financing. The mixed corporations, which enjoy greater financial and administrative autonomy, contract their services to the Government. The agencies include:

- SODEVA (Société de Développement et de Vulgarisation Agricole): the oldest of the development agencies; created to provide technical services and deliver new technologies (largely animal traction and improved production inputs) to farmers in the Groundnut Basin as part of the Government's program to raise agricultural productivity there.

- SAED (Société d'Amenagement et d'Exploitation des Terres du Delta): created in 1965 to develop rice and other irrigated crops in the Senegal River valley; responsible for the development and management of the irrigated "perimeters" in the Fleuve; also collects and mills rice produced on its projects.

- SODEFITEX (Société de Développment des Fibres Textiles): partially owned and directed by CFDT, a French textile company; charged with the development of cotton cultivation in the Senegal Oriental region and eastern Casamance, as well as some rainfed rice and maize production in these areas.

- STN (Société des Terres Neuves): created to manage the Government's resettlement programs in the "new lands" of eastern Sine Saloum and Senegal Oriental; provides assistance for crop production in these areas.

- SODESP (Société pour le Développement de l'Elévage dans la Zone Sylvo-Pastorale): responsible for the development of livestock production and marketing programs in the sylvo-pastoral zone of north and central Senegal.

- SOMIVAC (Société de la Mise en Valeur de la Casamance): the recently created development agency for the Casamance; provides technical assistance for the development of rice and other food crops.

Coordination of the land development agencies' activities is achieved by the DGPA under the MDRH. Foreign financial and technical assistance to agricultural development projects in Senegal is usually channelled through one of these corporations.

At the local level, two main forms of organization for agricultural development exist. The first are the Rural Expansion Centers (Centres d'Expansion Rurale, or CER) which were established in the 1950's to provide

technical assistance to farmers and to demonstrate new farming techniques. There is one CER in each district (arrondissement), and the technical assistance is provided by a team of experts from the various departments of the MDRH, ONCAD, and the land development agencies. The second and most basic form of organization is the cooperative through which, with a few exceptions, all agricultural credit and improved agricultural inputs in Senegal are purchased and distributed. In addition, the cooperative is the major channel for marketing groundnuts, and also handles other grains and products according to members' needs. Exceptions to distribution of inputs through the coops include the Fleuve irrigated perimeters, for which SAED takes the responsibility for providing inputs and commercializing output, and cotton in Senegal Oriental, which is controlled and marketed by SODEFITEX.

There are currently some 2,600 coops in Senegal, mostly for groundnuts, but also for other crops and sectors (rice, vegetables, trucking and fishing). Average membership is 120 farmers, drawn from a radius of 2 to 5 km in the Groundnut Basin, and 5 to 15 km elsewhere.

Exhibit 2.14 depicts the principal relationships among the various agricultural support organizations, and between these organizations and the individual producer. The structure shown is characteristic of most agricultural regions in Senegal, except as noted above.

The diversity of levels of intervention, and the range of intervening organizations, has led to a number of problems with respect to the delivery of agricultural services in Senegal. ONCAD has been widely criticized for its inefficiency: inputs often arrive at the cooperatives after the opening of the planting season, payments to producers are frequently delayed, and the groundnut transport network historically has been poorly organized. Like other agencies in this system, ONCAD suffers from a lack of skilled staff at all levels, due in part to the noncompetitive salaries and unsatisfactory hiring and staffing policies governed by the Senegalese Civil

Exhibit 2.14

Senegal: Representative Organizational Structure of Agricultural and Marketing Services

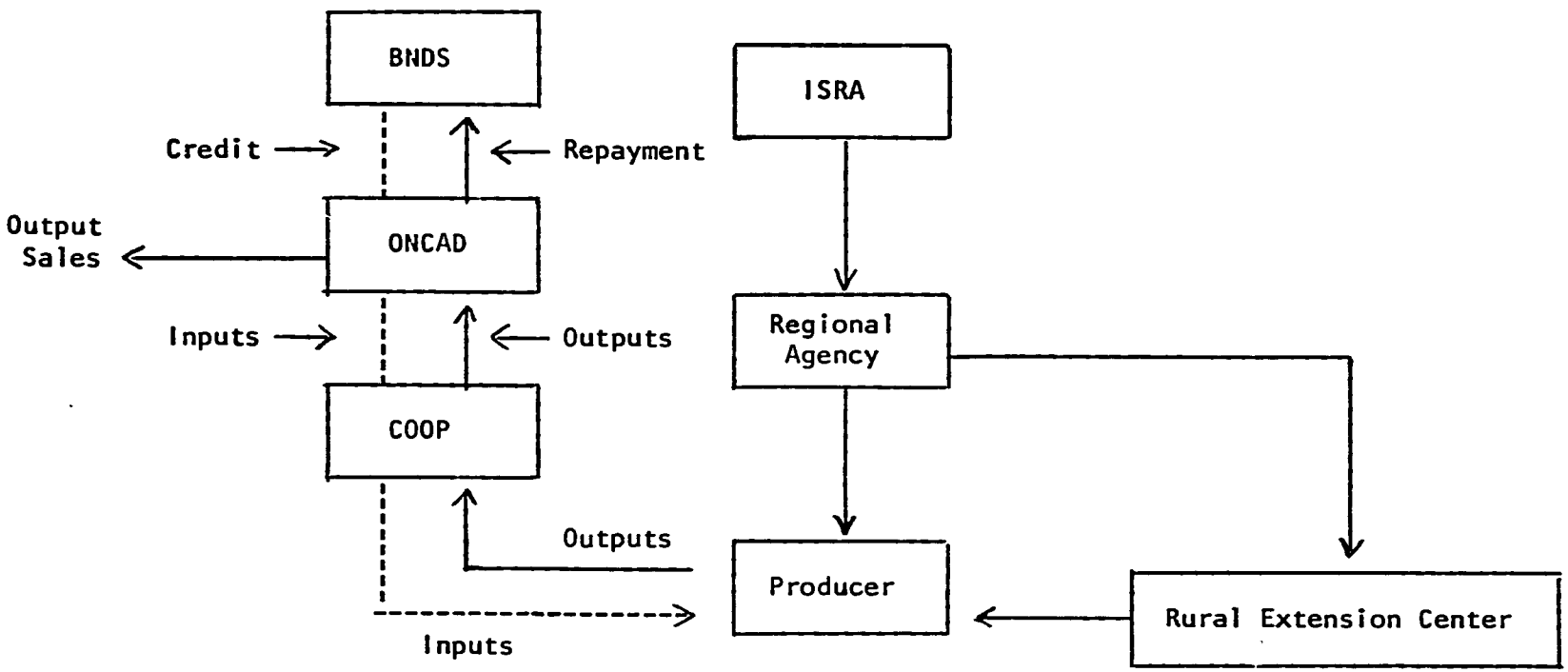

Source: AID, Development Assistance Program, FY 1975, Section Three, Annex A, and Checchi and Company

Service. ONCAD is also plagued by a lack of financial autonomy, unsuitable administrative procedures, and poor financial controls.

The cooperative movement has been justifiably criticized as a structure imposed by the Government on the farmers. The movement was not indigenous, but was rather a means introduced by the Government to organize the rural sector around the production and marketing of certain crops. Cooperatives therefore have difficulty defending their own interests, especially since they are administered by the same agency (i.e., ONCAD) with which they must deal for services. They have also experienced problems of domination by the local elite, generally poor administration, and cheating of members in weighing groundnut crops. Some analysts believe that many of the cooperatives are too small to operate efficiently, although recent Government efforts to consolidate them into larger units may widen the gap between the administration and the members of the coops.

The concept of delivering technical assistance services through regionally-based agencies has provided a certain degree of flexibility for the administration of agricultural development in Senegal. The goal-oriented nature of their intervention also tends to produce tangible results. In spite of the constraint of lack of skilled staff, most of the regional agencies, and SODEVA in particular, have developed a reputation for fairly effective delivery of services. To some extent, however, these agencies duplicate services provided by other organizations, resulting in conflicts over spheres of influence and competition for scarce financial and human resources. Generally speaking, they are oriented toward the development of one or two crops and tend to lack interest in more comprehensive and integrated regional development activities. Moreover, since the regional land development agencies receive their instructions from the Government, there is little discussion or feedback concerning the wisdom or applicability of Government goals in the field.

The Production Unit

The ways in which traditional land tenure is defined and farming decisions are made in rural Senegal vary among regions and ethnic groups. The typical arrangement is for the extended family unit, or carré, to cultivate in common a collection of plots (usually half the cultivated area or more) under the family head. Because the family head is responsible for feeding all members of his household, these plots are usually planted in subsistence cereals. Part of the remaining land is used by the head of the carré to produce cash crops and the balance is allocated to nuclear family heads, wives, relatives, and non-related seasonal workers. Cash crops are often cultivated on these secondary units, and sales revenues are controlled by the person who works the land. If commercial inputs, equipment or draft animals are utilized, they must either be borrowed from the household head or purchased through him from the coop.

Traditional land rights are vested in the extended family, and land is not subject to alienation. However, families who own more land than they can cultivate will rent plots to other families. The rent system varies according to ethnic group, and rents, which are usually paid in kind, may be nominal or may involve a share-cropping arrangement. The 1964 Land Tenure Law (Loi sur le Domaine Nationale), giving the state title to all agricultural lands in Senegal and permanent usufruct rights to those who till the land, has rarely been enforced. Nevertheless, it has made some families reluctant to rent land for fear of losing their traditional rights to it.

The majority of family holdings are small, ranging from three to twenty hectares. To some extent, even in areas where land is not an important production constraint, the amount of land which any one family cultivates is limited by the amount of labor available.7/ Family units, which at one

---

7/ One man can farm from 1 to 1.5 hectares per year manually, and between 3 and 4 hectares when animal traction is used.

time consisted of 30 to 40 people, now average 10 to 14 people in most regions of the country. Exceptions include the large farms (50 to 100 hectares) operated by the Mourides (a Muslim religious brotherhood) in certain frontier areas, and commercial farming ventures such as the CSS sugar plantation at Richard-Toll and BUD-Senegal's commercial vegetable enterprise on the outskirts of Dakar, both of which employ wage laborers. On the Government-sponsored rice projects in the Fleuve, farmers do not own their land nor are they paid wages; instead, they are allowed to farm the irrigated plots in return for an agreement to market their surplus through the Government.

The social and management structure of the typical farm production unit in Senegal can affect the success or failure of agricultural development schemes in several ways. First, because the land is redistributed among family members and other workers at the beginning of each crop season, individual farmers may be reluctant to invest in capital improvements on plots of land which they do not permanently control. Second, the division of a family's holdings into many small parcels under separate management may rule out the use of mechanized equipment and other technologies which are cost-effective only on larger farms. Finally, since the family head is usually the only member of the household who belongs to a cooperative, access to some factors of production may be unequally distributed among the various farmers who make up the production unit. There is evidence, for instance, that fertilizers and other commercial yield variables are used principally on plots controlled by the family head, while women and seasonal workers employ more traditional production technologies.8/ In those areas of the country where women are largely responsible for the production of subsistence food crops (Diola rice growers in the Casamance, for

---

8/ As part of the University's West Africa Project, researchers at Purdue have been collecting field data on the social organization of farming units in Senegal which will provide development planners with a better understanding of the factors that influence decision-making and the allocation of resources on traditional farms. This section reflects in part the results of preliminary analysis of the Purdue field data.

example), lack of access to credit, technical assistance, and market outlets may impede development of food grain surpluses.

Agricultural Inputs

The extent to which commercial fertilizers, animal-drawn equipment, pesticides, and selected seeds are used to improve crop yields is a good indicator of the level of agricultural modernization in developing countries. In Senegal, the utilization of agricultural inputs depends on a number of factors, including farmer incomes, government distribution and pricing policies, soil conditions, and the crop in question. Available data on trends in input utilization are summarized below.

Commercial Fertilizers

Consumption of commercial fertilizer materials during the 1976/77 crop year amounted to about 115,000 tons. This represents a more than sevenfold increase over the 13,700 tons applied in 1961/62, immediately after Senegal gained its independence. The rate of increase has been somewhat uneven, especially during the late 1960's when demand dropped sharply in response to a decline in groundnut prices, transportation difficulties, and unfavorable weather conditions. In more recent years, however, the trend has been steadily upward, and an annual growth rate of 20 percent has been maintained since 1973. During the period of the Fifth Plan, the Government hopes to achieve a 12 percent annual rate of increase, which would raise total consumption to the 285,000-ton level by 1981.

Exhibit 2.15 gives a breakdown of fertilizer utilization by crop for the past five years. Groundnuts and millet typically account for between 75 and 80 percent of the total volume. The remaining 20 to 25 percent is used primarily on cotton and rice, with cotton yields being particularly dependent on fertilizer inputs.

Exhibit 2.15

Estimated Use of Fertilizer Materials by Crop
1972/73 through 1976/77
(In thousands of tons)

Year	Crop					Total
	Groundnuts	Millet	Rice	Cotton	Other	
1972/73	23.1	18.5	0.8	3.0	3.7	49.1
1973/74	19.9	13.2	5.3	4.9	0.9	44.2
1974/75	29.5	20.5	7.9	7.0	1.6	66.5
1975/76	46.7	28.3	8.6	6.8	2.5	92.9
1976/77	57.3	35.1	11.3	7.9	3.5	115.1

Source: International Fertilizer Development Center, op. cit.

It is estimated that nearly 26 percent of all cultivated area in Senegal received applications of commercial fertilizer in 1975. According to a 1977 study by the International Fertilizer Development Center,9/ there is a good potential in Senegal for increased fertilizer use on marketed crops, provided fertilizer:crop price relationships remain favorable to the farmer.

Fertilizer prices are heavily subsidized. In 1976/77, farmers paid about $87/ton (20 fr. CFA/kg) for fertilizer priced ex-factory at $239/ton. All compound fertilizers are sold at the same price throughout the country, regardless of nutrient content and distribution costs. This works to the disadvantage of farmers in the central and northern parts of the Groundnut Basin, where chemically less concentrated applications are recommended and where yield returns are consequently smaller per dose. The Government also covers the cost of rock phosphate applications in the Groundnut Basin in an effort to maintain soil fertility.

9/ op. cit.

Blended fertilizers are produced domestically by the Industrial Fertilizer Society (Société Industrielle d'Engrais au Sénégal, or SIES). Local phosphates from Taiba and Thies are used, but other raw materials, including potassium chloride, sulfur, and ammonia, must be imported. All urea is imported, as are small amounts of other prepared fertilizers for which domestic demand is low.

Current capacity of the SIES plant is 120,000 tons per year of blended fertilizers. As Senegal currently consumes less than this amount, SIES exports the surplus to neighboring countries, primarily Mali and the Ivory Coast. This is a temporary measure, however, in that SIES is committed to concentrating on the domestic market in return for prices guaranteed by the Government.

Animal-Drawn Equipment

Senegal has achieved notable success in introducing animal-drawn equipment in the rural sector. Prior to independence, such equipment was used only rarely to cultivate the land. Beginning in 1964, the Government mounted a campaign to promote the use of light animal-drawn implements in order to expand the number of hectares that could be handled by one man during peak periods of labor demand, and thereby increase groundnut and millet production. In the ensuing 15 years, the use of these implements has become relatively widespread, especially in the Groundnut Basin where an estimated 70 to 80 percent of producers now own seeders and weeders (hoes). Horse and oxen carts, groundnut harvesters, plows, harrows, combines, and polycultivators are also employed in the production of cash and subsistence crops, albeit in smaller numbers.

Most of the animal-drawn equipment used in Senegal was developed or adapted locally by researchers at CNRA-Bambey and is manufactured in Cap Vert by SISCOMA. It is distributed to the farmers by ONCAD on terms which generally involve some Government subsidy and the extension of credits by the BNDS. Exhibit 2.16 shows quantities of seeders, weeders, and plows distributed between 1973/74 and 1976/77.

Exhibit 2.16

Sales of Selected Agricultural Equipment: 1973/4-1976/7

Type	1973/74	1974/75	1975/76	1976/77
Seeders	11,461	8,967	18,600	26,350
Weeders	22,902	16,658	28,600	29,913
Plows	3,271	4,138	3,800	6,195

Source: Senegal, Ministry of Planning and Cooperation, op.cit.

Government objectives during the period of the Fifth Plan (1977/78 through 1980/81) include distribution of an additional 152,000 seeders, 155,000 weeders, 166,000 animal-drawn carts, and 142,000 other units of equipment. Whether or not this objective can be achieved will depend on the ability and willingness of farmers to contract and repay the sizable debts required to purchase new animals and equipment.

Pesticides

Insecticides and fungicides are applied primarily to vegetables, cotton, and tobacco although they are also used on an as needed basis on the Government's rice project lands. Consumption has increased from about 24,000 tons in 1960 to 108,000 tons in 1975. The rate of growth has been irregular, however, due to declines in utilization during periods of poor harvests.

Selected Seeds

Unlike fertilizer and pesticide consumption, the use of selected seeds does not appear to decline in response to unfavorable growing conditions. Selected groundnut seed, in particular, has experienced a steady growth in demand, rising from under 30,000 tons in 1960 to 102,000 tons in 1975, when it represented about 80 percent of the total seed employed. Compared with groundnuts, quantities of selected seed used for rice, millet, and other

food crops are relatively small. Consumption of selected rice seed, which is employed primarily on the Government-managed rice projects in the Fleuve and Casamance, amounted to approximately 2,260 tons during the 1975/76 campaign, while the use of selected millet, maize, and niebe seeds totalled only a little more than 90 tons. The regional development agencies distribute selected rice seed to the farmers, and distributions of selected seeds for groundnuts and food crops other than rice are handled by ONCAD.

Sector Development Programs and Priorities

Senegal's Fifth Four-Year Development Plan gives top priority to the agricultural sector of the economy. The Plan aims at strengthening the country's balance of trade position by expanding food exports and substituting domestic products for food imports. Key sector objectives are: (1) to stabilize oil groundnuts production at 1.2 million metric tons per year; (2) to increase production of confectionery groundnuts, vegetables, cotton, and meat and fish products for export markets; (3) to increase production of vegetables, fruits, cotton, and dairy products for import substitution purposes; and (4) to reduce and ultimately eliminate the national food grain deficit. The last objective is to be achieved through expanded domestic production of rice and wheat, as well as through a program designed to alter local consumer preferences in favor of millet, maize, and other dryland cereals.

Production Targets

Exhibit 2.17 compares 1981 production targets for cereals and groundnuts with annual average production volumes attained between 1971 and 1975. The figures reflect an 80 percent increase in domestic food grain output (from 654,000 to 1,177,000 tons), including 226,000 more tons of millet and sorghum, 213,000 more tons of rice paddy, and 84,000 more tons of wheat and other cereals. The target for millet and sorghum is to be achieved primarily through promotion of improved production practices, with only a small increase in the amount of land under cultivation. In the case of rice paddy, much of the expected growth is ties to existing and proposed water man-

Exhibit 2.17

Senegal: 1981 Production Targets by Crop

Crop	Annual Production ('000 tons) 1971-75 av.	1981	Total Increase(%)
Millet and Sorghum	524	750	43.1
Rice Paddy	87	300	244.8
Maize and Fonio	43	98	127.9
Wheat	-	29	-
Total Cereals	654	1,177	80.0
Oil Groundnuts	762	1,200	57.5
Confectionery Groundnuts	10	63	530.0
Total Groundnuts	772	1,263	63.6

Source: Senegal, Ministry of Planning and Cooperation, op. cit.

agement projects on the Senegal River and in Lower Casamance. However, subsequent delays in attaining desired yields and infrastructure development objectives now make it unlikely that the rice target will be realized on schedule.10/ The target for wheat is also considered to be overly ambitious in that, while trials have been conducted for wheat on the Fleuve perimeters,11/ they have so far not met with much success.

10/ In a study conducted by the West African Rice Development Association (WARDA) and the Stanford University Food Research Institute for USAID, entitled "The Political Economy of Rice in West Africa," it was estimated that domestic paddy production would amount to 173.6 million tons annually by 1980. This represents only 58 percent of the Fifth Plan target for rice paddy for 1981.

11/ For an explanation of this term see the footnote in Section 4.C.

With respect to export crops, the Plan foresees an annual output of 1,200,000 tons of oil groundnuts and 63,000 tons of confectionery groundnuts by 1981. The figure for oil groundnuts, while below the 1976 output and about the same as was achieved in 1977, is substantially above the average production during the drought years of 1968-1973. Since groundnut yields are sensitive to rainfall levels, and since drought tends to occur in Senegal approximately one year out of every four, it is doubtful that this target is attainable on a consistent basis. The projection for confectionery groundnuts, which represents a 530 percent increase over 1971-75 production levels and assumes some extension of the growing area as well as development of new, higher yielding product varieties, may also be difficult to attain in years of drought.

The Plan also anticipates growth in production of vegetables, livestock, and fish. For vegetables, the 1981 target of 139,000 tons compares with 85,000 tons produced in 1975 and is to be brought about through an expansion in cultivated area along with quality and yield improvements. Planning projections for meat, milk, and fish production provide for increases of 30 percent, 28 percent, and 59 percent respectively between 1975 and 1981 (Exhibit 2.18).

Exhibit 2.18

Senegal: 1981 Production Targets for Livestock Products and Fish

Product	Annual Production (thousand tons or hecto-litres)		Total Projected Increase (%)
	1975 (actual)	1981 (projected)	
Meat and Offals	50	65	30.0
Milk	1,185	1,519	28.2
Fish	374	596	59.0

Source: Senegal, Ministry of Planning and Cooperation, op.cit. and World Bank.

Planned Development Projects

The Fifth Plan calls for an overall investment of $1.8 billion, of which about 27 percent ($482.9 million) is allocated to projects in the primary sector. The crop subsector accounts for 43.4 percent of projected primary sector investment, the fisheries subsector for 25.5 percent, and the livestock subsector for 14.4 percent.12/ The remaining 16.9 percent of the $482.9 million is set aside for forestry and rural water projects (Exhibit 2.19).

Within the crop subsector, the emphasis is on development and management of water resources for irrigation purposes: $75.5 million is devoted to SAED's irrigated production projects in the Senegal River basin, and another $42.3 million to water control and irrigation projects in the Casamance, Senegal Oriental and Sine-Saloum. Other investment targets include SODEVA's intensified production program for rainfed crops in the Groundnut Basin ($26.6 million) and various projects to expand cotton and cereals production in Casamance, eastern Sine-Saloum, and Senegal Oriental. Storage facilities for millet and maize and measures to promote fruit and vegetable production are also proposed for funding under the Fifth Plan.

$99.7 million, or approximately 80 percent of the proposed investment in the fisheries subsector, would be expended on improvement in port facilities and modernization of the industrial fishing fleet. Investment priorities for the livestock subsector include construction of wells, firebreaks, and other range management infrastructure in the sylvo-pastoral zone and Senegal Oriental, integration of stockraising with crop production activities in the Casamance and other sedentary agricultural zones, and development of new cattle fattening, processing, and marketing facilities.

12/ Proposed Fifth Plan investments in the crop, livestock, and fisheries subsectors total $401 million. This compares with a planned investment of $289 million in these subsectors during the period of the Fourth Plan (1973-77), of which less than half ($138 million) was actually committed.

Exhibit 2.19

Senegal: Planned Investments in Primary Sector, by Project Category: 1977-81

	Planned Investment (millions)	Subsector Share (percent)	Sector Share (percent)
CROP SUBSECTOR			
Rainfed Cereals and Cash Crops			
Groundnut Basin	$ 26.6	12.7	5.5
Eastern Senegal and Casamance	37.7	18.0	7.8
Multi-regional	10.6	5.0	2.2
Subtotal	74.9	35.7	15.5
Irrigated Cereals and Cash Crops			
Senegal River Basin	75.5	36.0	15.6
Other Regions	42.3	20.2	8.8
Subtotal	117.8	56.2	24.4
Fruits and Vegetables	14.7	7.0	3.0
Miscellaneous	2.3	1.1	0.5
Crop Subsector Total	209.7	100.0	43.4
LIVESTOCK SUBSECTOR			
Livestock Production	61.5	90.3	12.7
Livestock Processing and Marketing	6.6	9.7	1.4
Livestock Subsector Total	68.1	100.0	14.1
FISHERIES SUBSECTOR			
Industrial Fisheries	99.7	80.8	20.6
Artisanal Maritime Fisheries	21.3	17.3	4.4
Artisanal Inland Fisheries	2.3	1.9	0.5
Fisheries Subsector Total	123.3	100.0	25.5
OTHER SUBSECTORS			
Forestry	51.7	63.2	10.7
Rural Water Supply	30.1	27.8	6.2
Other Subsectors Total	81.8	100.0	16.9
GRAND TOTAL PRIMARY SECTOR	$ 482.9		100.0

Source: Senegal, Ministry of Planning and Cooperation, op. cit. An exchange rate of $1.00 = 230 francs CFA is used to convert local currency to U.S. dollars.

Over 75 percent of the proposed Fifth Plan investment in crop, fisheries, and livetock projects is expected to come from foreign sources; the majority of these funds had already been acquired when the Plan was issued in mid-1977. Principal donors include the World Bank, the European Development Fund (FED), and the bilateral development assistance agencies of France (FAC), Canada (CIDA), and the United States (USAID). The Governments of Denmark, the Netherlands, and the Peoples Republic of China have also made financial and technical support commitments to agricultural development projects in Senegal.

Generally speaking, the production targets and investment objectives established for Senegal's agricultural sector during the Fifth Plan period are over-optimistic. There are many serious constraints on agricultural development in Senegal, among them insufficient infrastructure, scarce technical manpower, reliance upon external sources for financing (which is not always fully committed when the Plan is drawn up), and the dependence of the sector on the vagaries of rainfall which can result in serious sectoral disruptions when droughts occur.

The dependence of the rural sector -- and indeed much of Senegal's economy -- on the cultivation of one major cash crop is in many respects also detrimental to sectoral development. Yet efforts to diversify are limited by the poor soils and low levels of precipitation that characterize many areas of the country. In the North and Central parts of the Groundnut Basin in particular, few crops other than groundnuts and short-cycle millet can be grown. Diversification may also contribute to a less than optimum utilization of domestic resources by encouraging the production of crops for which Senegal does not have a comparative advantage.

After the devastating experience of the last drought, Senegal's Government has identified water management and food self-sufficiency as major policy goals. While such policies can bring important benefits to the people who live in rural areas of the country in the form of reduced farmer risk, increased production, accelerated regional development, and the like, they also involve high cost.

Efforts to modernize Senegal's agricultural sector are not only financially costly but also costly in terms of energy use. The promotion of agriculture in certain parts of the country, such as the Fleuve region, means making investments in massive land development and irrigation schemes largely dependent on mechanized equipment. The traditional rainfed crop system is being replaced by more intensive cultivation practices using commercial inputs. The introduction of new crops, such as cotton and market vegetables, is being accompanied by an increase in demand for fertilizer and pesticides. The sails and paddles traditionally used by artisanal fishermen to power their boats are being abandoned in favor of outboard motors. Implicit in these and other patterns of change in the agricultural system of Senegal is a growing dependence on commercial, non-renewable forms of energy. Senegal's energy support system and its relationship to agriculture are examined in Chapter Three.

INTENTIONALLY
LEFT
BLANK

Chapter Three

ENERGY SYSTEM OVERVIEW

Introduction

This chapter provides a general description of Senegal's energy system, including sources and costs of energy fuels, the principal energy supply and conversion technologies employed, and energy consumption by product and end use. Also discussed are the Government's national energy policy and efforts to develop Senegal's renewable energy resource base. The supply and demand structure for each major energy source (gas and oil, electricity, hydropower, wood, and solar) is examined in Section B. Section C deals with energy policy considerations and ongoing and proposed R&D projects to promote the adoption of alternative energy technologies in Senegal.

Energy Supply and Demand Structure

Petroleum Products

It is estimated1/ that 40 percent of the fuel energy used in Senegal at the present time is supplied by petroleum products, consumed either directly in the form of oil and gas or indirectly in the form of electricity produced in oil-fired plants. There are no known domestic coal or uranium deposits and the development of the country's hydropower resources on the Senegal and Gambia Rivers is at least a decade away.

1/ See CILSS/Club du Sahel, Energy in the Development Strategy of the Sahel, October 1978.

Oil and Gas

Although substantial investment have been made over the past 25 years to finance oil and natural gas explorations in Senegal, only two fields large enough for commercial exploitation have been found. One deposit, containing an estimated 100 million tons of oil, was discovered off the coast of the Casamance in 1968; however, experiments are still underway to develop a process for removing this oil, which was found to be too heavy to bring to the surface using conventional extraction techniques. The second deposit, also discovered some years ago, is a natural gas reserve at Diam Niade Kador near Rufisque. While this is now being connected by pipeline with one of Senegal's two main electric power plants on the outskirts of Dakar, it is not large enough to have a significant long-term effect on commercial energy supplies. Thus, barring any future oil and gas discoveries or successful exploitation of the Casamance deposit, Senegal must continue to depend on imports for the bulk of its petroleum requirements.

Most of Senegal's petroleum imports are in the form of crude oil, which is processed domestically into refined products for local consumption and export. Some refined products are also imported to supplement domestic production. In most years, however, these represent less than ten percent of total fuel imports and are confined in the main to gas-oil, jet fuels, and gasoline.

Exhibit 3.1 shows the volume of crude and refined petroleum products purchased by Senegal from foreign suppliers between 1973 and 1978. While imports were about 200,000 tons higher in 1978 than five years previously, the 1978 total includes above average quantities of jet fuel (80,000 tons) that were needed to accommodate a sharp rise in the number of foreign aircraft refueling in Dakar. Between 1973 and 1977, a more representative 120,000-ton increase obtained.

Exhibit 3.1

Senegal: Imports of Crude and Refined Petroleum Products, 1973-78

Year	Petroleum Imports (tons)				Gross Import Value	
	Crude Oil	Refined Products	Total	Change (percent)	Total (millions)	Change (percent)
1973	668,000	30,000	698,000	-	$22.8	-
1974	673,000	46,000	719,000	+ 3.0	69.2	+303.5
1975	653,000	67,000	720,000	+ 0.1	70.7	+ 2.2
1976	696,000	69,000	765,000	+ 6.3	79.5	+ 12.4
1977	765,000	52,000	817,000	+ 6.3		
1978	758,000	143,000	901,000	+10.3	110.0	

Source: United Nations, World Energy Supplies, 1950-1976, and SAR Refinery.

Senegal's oil import bill tripled between 1973 and 1974 and, except in 1975 when the country benefited from a decline in the value of the U.S. dollar, has been rising steadily ever since (see Exhibit 3.1). Iraqi crude that was priced at $2.20 per barrel in 1973 cost $12.66 in 1976 and $15.70 in early 1979. Comparable figures for crude oil from Nigeria which, along with Iraq and Algeria, is one of Senegal's principal oil suppliers, were $3.20 (1973), $14.50 (1976), and $18.50 (1979) on a per-barrel basis.

Until the dramatic increase in oil prices in 1974, the annual cost of importing petroleum products typically accounted for between five and six percent of Senegal's total expenditure on imports. By 1976, however, this share had risen to 12 percent, and the equivalent of half the country's proceeds from its groundnut exports were being used to purchase oil. As oil costs continue to rise and groundnut production stabilizes at about 1,200 million tons annually compared with the 1,424 million tons produced in 1976, it is likely that an even greater proportion of Senegal's groundnut export earnings will be needed to pay for imported fuel.

Approximately one-third of the foreign exchange Senegal spends on oil imports is recovered through the sale of jet fuel to foreign aircraft and

the export of refined petroleum products, mainly to Mali and Mauritania. All refining takes place at the SAR (Societe Africaine de Raffinage) facility at M'bao on Cap Vert.2/ The refinery currently operates at about 90 percent of its 850,000 ton annual capacity, producing 768,000 tons of petroleum products in 1978. Residual fuel oils typically account for about 43 percent of its total production, and distillates (diesel and gas-oil) for about 21 percent. The balance is made of jet fuels and kerosene (18 percent), gasoline (16 percent), and small amounts of liquid petroleum gas (less than one percent). Exhibit 3.2 gives total production, exports, imports, and apparent domestic consumption of these products for 1976, based on SAR data.

Exhibit 3.2

Senegal: Estimated Domestic Production and Consumption of Petroleum Products, 1976

Product	Domestic Production	+ Imports	- (Exports)	= Domestic Consumption
Butane, Propane (in tons)	5,762	675	1,096	5,341
Gasoline (in m^3)	158,113	31,476	20,809	168,780
Jet Fuel (in m^3)	146,623	33,390	12,094	167,919 1/
Gas-Oil (in m^3)	111,958	19,047	26,413	104,592
Diesel Oil (in tons)	53,649	-	12,655	40,994
Residual Fuels (in tons)	260,567	-	12,306	248,261

1/ Includes sales to foreign aircraft.

Source: "Senegalese Industry," op. cit., based on SAR documents.

2/ Construction work on a second refinery at Cayar appears to have been delayed indefinitely. The refinery, with an annual processing capacity of 1.5 million tons of crude oil, was to have been part of a large petrochemical complex financed jointly by Senegalese and Iranian interests. If, as is likely in light of recent political changes in Iran, the Cayar project

Exhibit 3.3 is an estimated percentage breakdown of domestic gasoline, distillate, and residual fuel consumption by product and end use. Motorized vehicles and boats account for the bulk of gasoline and gas-oil utilization, while the electric power plants are the principal consumers of heavy residual fuels. Diesel is consumed in transport, in mining, and, together with gas-oil, in other sectors of the economy including agriculture. No data are available, however, which would permit any distinction to be made between agricultural and miscellaneous uses of these fuels.

Butane, which accounts for most liquid petroleum gas consumption in Senegal, is sold in small (3 kg.) bottles for use in conjunction with gas cooking burners, as well as in larger bottles and bulk quantities for residential and industrial purposes. Sales in 3 kg. bottles rose from 92 tons in 1974 to 1,842 tons in 1977 in response to a Government campaign to encourage substitution of butane for wood-based cooking fuels. The objective of this campaign was to raise the annual level of butane consumption by 10,000 tons through a five-year program of tax exonerations, price subsidies, and duty-free importation of cooking equipment. It was hoped that such incentives would reduce urban demand for charcoal and at the same time provide a market for excess butane production at the SAR refinery. Since the program began in 1974, however, other domestic and export markets for butane have expanded, and Senegal now imports small quantities of this gas (1,500 tons in 1978). For this reason, and also because of an unanticipated reluctance on the part of many urban households to convert to gas from charcoal,3/ the Government's incentive program was to have been allowed to lapse at the end of 1979.

---

is permanently abandoned, the capacity of the SAR refinery will probably be upgraded to 1.2 million tons in accordance with the original design for this facility. Such expansion would postpone the need to make any major investment in new refinery infrastructure before 1985.

3/ See Chapter Four (Section F) for a discussion of some of the reasons behind consumer preferences for wood-based cooking fuels.

Exhibit 3.3

Senegal: Estimated Percentage Consumption of Selected Refined Petroleum Products by Sector and End Use

Sector and End Use	Petroleum Product (percent)			
	Gasoline	Distillate Fuel Oils		Residual Fuel Oils
		Gas-Oil	Diesel-Oil	
Transportation				
Highway and Public Works Equipment	88.0	44.8	22.2	4.8
Fishing and River Craft	5.0	31.7	0.6	0.1
Railways	-	0.2	14.2	-
Industry				
Mining	-	5.9	29.1	13.8
Construction and Cement	-	-	4.2	0.6
Industrial Heating	-	0.3	2.3	5.3
Electric Power	-	-	4.7	75.1
Other Sectors	7.0	17.1	22.7	0.3
Total	100.0	100.0	100.0	100.0

Source: "Senegalese Industry," op. cit. based on 1975 data.

Exhibit 3.4 shows recent trends in domestic consumption (sales) of selected refined petroleum products. Gas-oil consumption has exhibited the highest rate of growth, reflecting a significant increase in demand on the part of the industrial and artisanal fishing fleets as well as public works operations. Consumption of jet fuel and residual fuel oil has also grown at a steady pace, attributable in the first instance to a rise in international air traffic at the airport in Dakar, and in the second instance to a growth in electric power production by Senegal's central grid. Gasoline sales, after falling off in 1974 and 1975, reached new highs in both 1976 and 1977. Domestic sales of kerosene (which is consumed in relatively small amounts in Senegal) also rose in 1976 following three years of relative stability. The level of diesel-oil consumption, by contrast, was about the same in 1977 as in 1973.

Exhibit 3.4

Senegal: Trends in Consumption of Selected Refined Petroleum Products: 1973-1977

Year	Gasoline (10^3 m^3)	Jet Fuel (10^3 m^3)	Kerosene (10^3 m^3)	Gas-Oil (10^3 m^3)	Diesel (10^3 tons)	R. Fuel (10^3 tons)
1973	128.2	136.3	13.5	51.4	38.6	210.1
1974	123.3	150.0	13.5	49.4	36.1	341.5
1975	117.8	175.1	13.0	90.2	44.2	240.6
1976	159.9	167.0	16.7	101.0	41.4	255.3
1977	168.1	198.2	16.5	115.3	39.2	281.8
1973/77 Change (percent)	+31.1	+45.4	+22.2	+124.3	+1.6	+34.1

Source: Senegal, Bureau of Mines. Figures for 1976 differ by relatively small amounts from those shown in Exhibit 3.3, which were provided by the SAR refinery.

In the absence of price elasticity studies, it is not possible to determine the effect that rising raw materials costs have had on consumer demand for refined petroleum products in Senegal. While one response to the 1974 increase in oil prices may have been a temporary decline in gasoline consumption, this trend has since been sharply reversed (see Exhibit 3.4). The recent growth in gasoline sales, moreover, has been accomplished in spite of heavy Government taxes and contributions levied on this product, amounting in the case of hi-test gasoline to approximately 233 percent of the ex-factory price.4/

4/ In early 1979, hi-test gasoline was selling in Senegal for $0.558 a liter, and regular gasoline for $0.465. The ex-factory prices of hi-test and regular gas were $0.138 and $0.129 respectively, and distribution margins amounted to $0.10 and $0.087. The balance ($40.32 and $0.249) represented taxes and contributions to the Government's Price Stabilization Fund. The use of this Fund to regulate fuel prices in Senegal is discussed in Section C of this chapter.

Electricity

Electric power installations in Senegal are typically owned by the State (through Electricité du Sénégal) and operated under lease by SENELEC, a joint stock companv in which the Government holds 50 percent of the shares. Exceptions include one plant run by the SEIC groundnut oil mill, and some 15 facilities owned and operated by public organizations (SAED, SODEFITEX) or private industry (SIES, CSS, etc.) which produce only enough power to supply their own internal needs. The SEIC concession, which sells electricity to residents of Ziguinchor, is scheduled for transfer to SENELEC within the next two or three years.

The existing SENELEC system consists of a 138.8 MW central grid connecting Dakar with St. Louis and the major cities of the Groundnut Basin (Diourbel, Kaolack, and Thies), and some 20 isolated stations called "secondary centers" (Exhibit 3.5). Power for the central grid, which is made up of one 90 KV high-tension line and several low-tension (30 KV) lines and spurs, is generated at two plants in the Dakar area. Both plants employ residual fuel oils to fire their steam turbine engines, while among the secondary centers all but the SEIC facility (which burns both oil and groundnut shells) depend on diesel fuel.

According to SENELEC's most recent annual report, 526,600 MWH of electricity were produced by the system in 1977, of which 99 percent (521,000 MWH) was accounted for by the central grid. Production by facilities outside the SENELEC system is estimated to be on the order of 100,000 MWH per year.5/

About 90 percent of the power generated by SENELEC's facilities is actually billed to subscribers. The regions of Cap Vert and Thies (where the Taiba phosphate mines are located) account for the bulk of total con-

---

5/ "Senegalese Industry." op. cit.

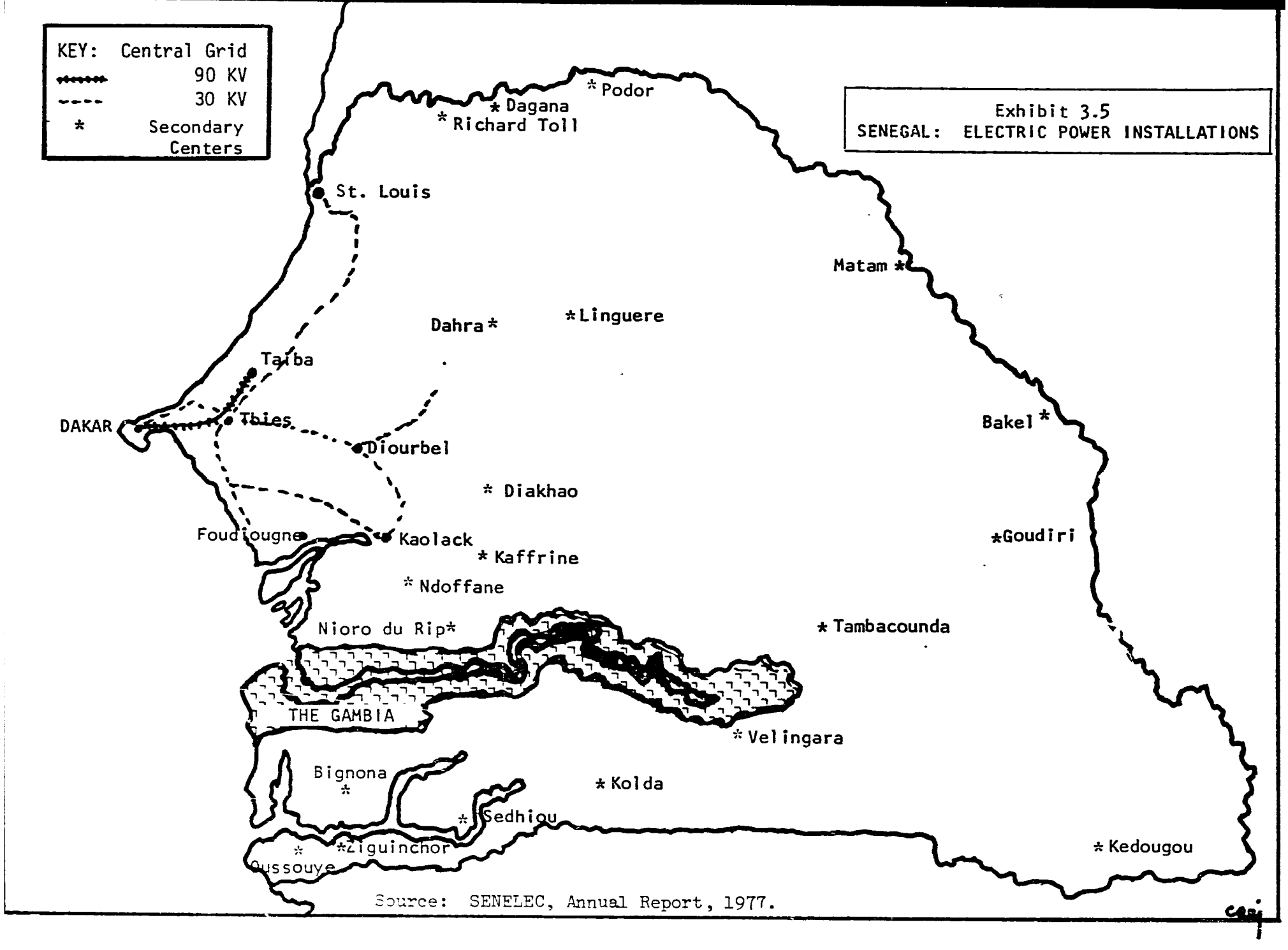

Exhibit 3.5
SENEGAL: ELECTRIC POWER INSTALLATIONS

Source: SENELEC, Annual Report, 1977.

sumption, which grew at an average rate of 7.3 percent per year between 1965 and 1975. Exhibit 3.6 provides percentage estimates of electricity consumption by region and end use for 1975, showing the heavy concentration of demand in the more industrialized urban areas of the country.

Exhibit 3.6

Senegal: Estimated Share of 1975 Electricity Consumption by Region and End Use (SENELEC Customers Only)

Region	Share (percent)
Cap Vert	63.5
Thies	30.4
Fleuve	1.7
Sine Saloum	1.6
Casamance	1.2
Diourbel	1.0
Senegal Oriental	0.6
Total All Regions	100.0
End Use	**Share (percent)**
Low Tension: Lighting	8.8
Household Appliances	12.6
Motive Power	5.1
High Tension: Taiba Mines	24.7
Other Industrial Uses	48.8
Total: All Uses	100.0

Source: "Senegalese Industry," op. cit.

Prices for electric power supplied from the central grid are now standard throughout the country, in spite of widely varying production and distribution costs. In 1977, low-tension service was priced at about $0.13

per kwh, and the high-tension per kwh rate averaged about $0.06. SENELEC's costs, by contrast, ranged from a low of $0.045 per kwh for high-tension power supplied to the Taiba mines, to a high of $0.32 for delivery of low-tension power to the City of Louga in northwestern Senegal. Low-tension costs for Dakar were $0.10 per kwh, which in effect constituted a subsidy by subscribers in the capital of their counterparts in other cities and towns served by the grid.

Electricity consumers in the secondary centers pay about three times more than central grid subscribers on a per kwh basis. Production and distribution costs, however, usually far exceed the rates that SENELEC is permitted to charge.6/ This discrepancy can be attributed to a combination of factors, including the high production and distribution costs and low levels of demand prevailing in those outlying areas where few large industrial users are based. A related problem is the high percentage of losses in distribution reportedly experienced by SENELEC's operations in some of the secondary centers.

By 1990, Senegal plans to expand the installed power of the central grid to 365 MW, which would permit an increase of about 265 percent over the current generating capacity of this network. Investments during the more immediate Fifth Plan period are proposed to cover new building construction, training programs, urban electrification projects, and the extension of several transmission lines, including one financed by CIDA that will provide service to rural coastal villages in the M'bour area south of Dakar. With respect to the secondary centers, FAC financing has already been committed to convert the diesel-fired Diakhao facility to an experimental solar-thermal generation center in an effort to reduce production costs. If this experiment is successful, plans exist for equipping six other sites in a comparable fashion, each capable of generating 50 KW of

---

6/ In 1976 in Bakel, for example, subscribers paid about $0.25 per kwh for electricity for lighting that cost SENELEC nearly $1.65 to produce and distribute.

electric power for village use. Also under study by the Government of Denmark is a rural electrification system for the Casamance region whereby power would be supplied from a central plant in Ziguinchor to a number of villages now served by diesel generators. While similar potential may exist for parts of Sine Saloum and the Senegal River Valley, the long-range outlook for rural electrification in less densely populated, more isolated regions of the country is considered to be bleak.

Domestic Energy Resources

Wood is the principal source of fuel energy in Senegal, accounting for an estimated 60 percent of total fuel use compared with about 40 percent attributable to imported oil and gas.7/ Other domestic energy resources, including water and solar power, are still in the development stage and thus far have made only a negligible contribution to available energy supplies, even though Senegal is far ahead of many countries in terms of its commitment to renewable energy technologies.

Wood

Approximately 39,000 square kilometers, or 20 percent of Senegal's land area, are classified as forest reserves. Another 105,000 square kilometers are made up of undeveloped open woodland and savanna. These wood resources are shrinking at an alarming rate. The combined effect of drought, brush fires, overgrazing, and uncontrolled cutting has resulted in deforestation in many parts of the country and in a loss of natural forest regenerative capacity. In 1976 in the Foundiougne (Sine-Saloum) area alone, 15,000 hectares of classified forests were destroyed by fire. Overcutting and neglect also exact their toll in losses on the order of 10,000 to 15,000 hectares in a typical year, and more in periods of drought.

7/ CILSS/Club du Sahel, op. cit. This estimate takes no account of the use of agricultural residues (livestock dung and plant wastes) as fuel sources which, as far as is known, has never been quantified for Senegal.

The commercial production and marketing of industrial and fuel wood is regulated by Senegal's Forest Service, which annually sets production quotas and fixes prices for the output. Most of the wood that is cut is sold directly as firewood or processed into charcoal. The cutting of wood for industrial uses represents a relatively minor proportion of the total production, as the majority of Senegal's industrial wood requirements are satisfied by imports from the Ivory Coast.

Exhibit 3.7 shows official charcoal and firewood production statistics for selected years since 1960. Following a period of rapid growth between 1960 and 1974, charcoal output appears to have stabilized at 84,000 to 94,000 tons per year. Commercial firewood production fell off dramatically in 1978, reportedly in response to a Government regulation prohibiting the use of firewood by bakeries located in large cities and towns. 1979 quotas were set at 81,000 tons for charcoal and 145,000 steres for firewood, the former representing a 3.7 percent decline vis-a-vis the previous year's charcoal production, the latter well above the volume of firewood entering official marketing channels in any recent year.

Exhibit 3.7

Senegal: Authorized Commercial Charcoal and Firewood Production, Selected Years

Year	Charcoal (tons)	Firewood (stacked m^3)
1960	30,600	41,700
1968	50,500	50,600
1971	58,000	58,100
1973	70,000	60,000
1974	92,500	75,000
1975	93,100	n.a.
1976	85,100	n.a.
1977	93,500	107,400
1978	84,100	86,200

n.a. = not available.

Sources: Edmond Uhart, Projet de Rapport sur les Problemes du Charbon du Bois au Senegal, Addis Ababa: United Nations Economic Commission for Africa, 1976, and Senegal Ministry of Rural Development.

These production statistics do not include charcoal and firewood marketed through illegal channels which, in some cities, are thought to account for as much as 50 percent of total fuelwood sales. Nor, more importantly in the case of firewood, do they cover the large quantities of wood that are gathered each year from the countryside to supply the fuel requirements of the rural population. While no data are available on the proportion of this wood that is obtained through illicit cutting of live trees as distinct from deadwood collection, total consumption of fuelwood in Senegal has been estimated by the Club du Sahel at three million cubic meters annually, of which less than five percent is subject to Government control.

The Fifth Four-Year Development Plan recognizes the need to protect and enhance Senegal's dwindling forest resources. The Plan foresees the expansion of national forest reserves by an average of 7,500 hectares per year. It also outlines a series of measures designed to protect existing wood resources, including improved forest maintenance procedures, construction of firebreaks, and tighter controls on resource exploitation. AID is expected to fund a greenbelt-fuelwood production project which calls for establishing some 3,000 hectares of new intensively-managed forest plantations on the outskirts of Thies. CIDA is participating in a five-year dune fixation program in the Atlantic coastal zone north of Dakar which involves the planting of trees for use as windbreaks. The FAO and the FAC are also engaged in forestry projects, the former in the Casamance and the latter in the Fleuve region where experiments in irrigated tree production are underway.

Whether these various programs will succeed in reversing the tide of progressive deforestation is open to question, however, as most fuelwood supply and demand projections suggest that far more massive efforts will be required. According to Club du Sahel estimates, for example, as many as one million new hectares of forest area may be needed in Senegal between now and the end of the century just to satisfy the anticipated demand for fuelwood products over and above current levels of use. This means that

50,000 hectares would have to be planted annually for the next 20 years, compared with the 30,000 hectares targeted for planting during the entire Fifth Plan period and the far smaller number of hectares reached by Senegal's Forest Service in the recent past (1,235 hectares in 1974, 1,400 hectares in 1977).8/

Hydropower

The Senegal River and the Gambia River are both important potential sources of hydroelectric power. Due to the exigencies of geography, decisions regarding the management of these waters are in the hands of two multinational organizations, the OMVS (Organization pour la Mise en Valeur du Fleuve Sénégal) and the OMVG (Office de Mise en Valeur du Fleuve Gambie), which are composed of representatives of Senegal as well as neighboring riverain states.

OMVS plans for the Senegal River include construction of dams equipped with hydroelectric turbines first at Manantali in Mali and then at Gourbassi on the Faleme, a tributary of the Senegal River on the Senegal-Mali border. Electricity generated at the Manantali facility, which is not expected to be in operation before 1990, is to go mainly to Malian subscribers, whereas that produced at the 113 MW Gourbassi station may be fed to the iron ore mines that are under study for the Faleme area in extreme southeastern Senegal. In both cases, the need to regulate the river's flow for irrigation purposes may limit the amount of power than can be made available.

The OMVS is also considering proposals to construct additional hydroelectric stations at Felou falls on the Petit-Gouina (Mali), another Senegal River tributary. Other long-range options include dams at Boureya and

---

8/ See Chapter Four (Section F) of this report for further discussion of projected fuelwood supply and demand. Information on fuelwood consumption patterns, pricing, and production control mechanisms is also provided in that Chapter.

Koukoutamba, and water control projects in the Guinean Basin of the Upper Bafing. However, like Manantali and Gourbassi, these potential hydroelectric sites are located in isolated, sparsely-populated regions far from the urban industrialized areas where electricity demand in Senegal is concentrated.

With respect to the Gambia River, three hydroelectric sites, all located in Senegal Oriental, have been studied by the OMVG. The most promising option involves construction of a large dam at Sambangalou and a small one at Ketriti which, together, would permit the storage of irrigation water as well as the production of approximately 100 MW of power. The power would probably be used by mining operations in the vicinity, although the OMVG claims that it may be able to deliver electricity to Dakar at costs competitive with those that are now being paid to supply low-tension subscribers in that city (about $0.10/kwh).

Solar and Wind Energy

Senegal, by virtue of its location in Africa's "sun belt," is blessed with an abundance of solar resources. The potential for exploitation of these resources as an energy source is greatest in the northern and central parts of the country, where the terrain is relatively open and the rainy season relatively short. Opportunities for the use of wind-powered technologies exist in the Atlantic coastal zone between Dakar and St. Louis. In most other regions of Senegal, however, the winds are either too weak or too seasonal in nature to serve as a reliable source of power.

Long before the advent of the "energy crisis," research on solar technology was being carried out by IPM (Institut de Physique Météorologique), University of Dakar. Between 1966 and 1975, a series of experimental solar-thermal pumping systems were designed and constructed by IPM with assistance from SOFRETES (Société Française d'Etudes Thermiques et d'Energie Solaire), a French firm engaged in the development and manufacture of solar energy devices. Other University research programs, including those asso-

ciated with the Semi-Conductor Lab at the Faculty of Sciences and IUT (Institut Universitaire de Technologie) have also been involved in developing and testing solar and wind-powered equipment for water pumping, drying, and refrigeration.

In 1976, SINAES (Société Industrielle des Applications de l'Energie Solaire) was created by government and private interests in Senegal and France for the purpose of building and installing solar equipment. One of SINAES' first projects was to equip four Senegalese villages with IPM 1 KW prototype systems for pumping household water supplies. Subsequent undertakings include installation of five windmills at the village level and a solar water heater on the roof of a hotel in St. Louis. In addition, SINAES is one of three firms participating in an AID/FAC-financed solar irrigation pumping project at Bakel in the Senegal River Valley. The Bakel experiment will represent AID's first venture into a field which up to now has been dominated by the French.

CARITAS and the Government of Senegal's Department of Human Resources (Promotion Humaine) also have a history of involvement in renewable energy development activities. CARITAS, which is the local counterpart agency of Catholic Relief Services, has helped to install hand pumps, Pompes Guinard photovoltaic water pumping systems, and experimental biogas operations in a number of villages in Senegal. Promotion Humaine has had responsibility for administering a program to introduce a variety of experimental technologies at the village level, including solar cookers and distillers, hand pumps, windmills constructed from local materials, and rainwater catchment basins.

A partial listing of these and other renewable energy research and development activities is presented in Exhibit 3.8, including available information on technology characteristics, costs, and financing sources. Not covered in the listing are projects which are still in the preliminary planning stages or which are scheduled for implementation after 1979. Such projects are discussed in the final section of this chapter.

Exhibit 3.8

SENEGAL: Partial Listing of Experimental Activities in the Development of Renewable Energy

Energy Technology	Responsible Organization(s)	Location and Date of Installation	Technical Characteristics	Cost[1/]	Source(s) of Financing
1. Solar-Thermal Pumps	IPM	IPM (1957-75)	Four 1 KW prototypes; 5-6 m^3 hourly pumping capacity at 25 meter depth; most recent model has 70 m^2 flat plate collector	Has been reduced to $40,000/unit	GOS, UNIDO, Others
	IUT	IUT (1976)	1 KW prototype	n.a.	n.a.
	SOFRETES, SINAES	Four rural villages in Thies and Fleuve (1976)	1 KW IPM prototype; 8-10 m^3 hourly pumping capacity at depth of 20 meters	$230,000	FAC
	SOFRETES, SINAES, Thermo-Electron	Bakel (1979) (US)	30 KW system	$1.4 million	AID/FAC
2. Photovoltaic Pumps	Semi-Conductor Lab	Lab (1975-6)	20 m^3/day output at 12 meters	n.a.	n.a.
	IUT	IUT	Solarex panels	n.a.	FAC
	CARITAS, Pompes Guinard	CNRA-Bambey (1978); Babek and Toki (Diourbel-1978); and Aere-Lao (Fleuve-1979)	900-1,300 watt systems utilizing RTC solar cells and/or Solarex panels; 65-100 m^3/day capacity at 10-20 meters; used for irrigation and domestic water supply	$35,000-50,000/ unit	FAC (Bambey), Pompes Guinard, Private donors
3. Windmills	IUT	IUT	Savonius prototype	n.a.	n.a.
	SINAES	Diaglé (Fleuve)	Savonius model	n.a.	n.a.
	SINAES, CARITAS	L'Ouli (1978-79)	Aerowatt model; 15-20 m^3/hour output	n.a.	FED
	Ecole Polytechnique de Thies	Thies (1976)	Australian and German equipment; village-level tests	n.a.	CIDA
4. Biogas	CARITAS	Ndjioukh Fissel	Indian Gobar-Gasplant; plant and animal wastes used to produce methane gas for cooking and lighting; liquid fertilizer byproduct	n.a.	n.a.

Energy Technology	Responsible Organization(s)	Location and Date of Installation	Technical Characteristics	Costs 1/	Source(s) of Financing
5. Solar Dryers	IPM, ITA	IPM (1974)	8 m^2 collectors; 250 kg. (fresh fish equivalent) capacity/48 hours	n.a.	n.a.
6. Solar Water Heaters and Distillers	IPM	IPM	340-liter capacity; experimental construction with inexpensive, light-weight materials; original model imported from Solar Energy Lab in Niger	n.a.	n.a.
	SINAES	St. Louis (1978)	4,000-liter capacity; 36 m^2 collectors; heats water to 45-50° C	$28,000	n.a.
	IPM	IPM (1975-76)	Experimental distiller, subsequently abandoned due to low output (3 liters/m^2/day)	n.a.	n.a.
7. Solar Cookers	IPM	University of Dakar (1978)	Parobolic prototype; IPM plans to experiment with heat storage technologies for use in conjunction with cooker	n.a.	n.a.
8. Other Activities	Promotion Humaine	Langomak (1974)	Experimental village center for low-cost appropriate technologies, including windmills, solar distiller, solar cooker, diesel grain grinder, etc.; later abandoned due to lack of water and outside support	n.a.	n.a.

1/ At late 1978 exchange rate of US $1 = 215 francs CFA. n.a. = not available.

Source: Adapted from Carol A. Ulinski, Trip Report, Senegal Renewable Energy Project, November 1978, and miscellaneous sources.

National Energy Policy

The Fifth Four-Year Development Plan describes Senegal's national energy policy as consisting of two basic objectives: (1) to avoid waste and make the most productive use of imported fuel energy consistent with the country's economic and social development programs; and (2) to inventory and develop domestic energy resources. The first objective is being addressed primarily through fiscal measures. The second objective is to be accomplished through development not only of existing oil, gas, and hydropower resources, but also of renewable energy technologies.

Fuel Prices, Taxes, and Subsidies

The Government of Senegal promotes what it considers to be the more productive uses of imported fuel energy at the expense of less productive ones through a system of price controls and taxation. Retail prices are fixed by the Government and maintained by the Price Stabilization Fund. Payments to the Fund by consumers of certain refined petroleum products are used to subsidize the price of others. Fuel products are also subject to varying rates of taxation at both the refinery and distribution level, with some being totally tax-exempt. The net result is that products with nearly identical production costs, such as hi-test gasoline and gas-oil, retail at vastly different prices (about $0.56/liter and $0.35/liter respectively in early 1979).

Gasoline consumers pay the highest taxes and make the largest contributions to the Price Stabilization Fund (see Exhibit 3.9). The retail prices of gas-oil, diesel, kerosene, and liquid petroleum gas also include taxes and contributions, but the amounts are lower than those assessed on gasoline. Certain categories of consumers, moreover, are entitled to tax exonerations on these products. Among those so favored are the domestic fishing industry, whose purchases of gas-oil are exempt from tax to enable them to compete with foreign fleets; bakeries utilizing diesel fuel in place of firewood; participants in the Government's butanization campaign

(see page 3.5); and SENELEC's two main electric generating plants. SENELEC also benefits from a Government subsidy on its purchases of heavy fuel oil.

Exhibit 3.9

Senegal: Price Structure of Selected Refined Petroleum Products, 1979 (in percent)

	Ex-Refinery Price	Distribution Costs	Taxes and Contributions	Total
Hi-test Gasoline	24.7	17.8	58.5	100.0
Regular Gasoline	27.7	18.8	53.5	100.0
Gas-Oil	39.6	19.6	40.8	100.0
Kerosene	44.6	25.9	29.5	100.0
Light Fuel Oil	75.6	22.0	2.4	100.0
Heavy Fuel Oil	80.2	24.7	- 4.9 1/	100.0

1/ Purchases of heavy (3500) fuel oil are subsidized by the Price Stabilization Fund. SENELEC purchases receive an even higher (12.74 percent) subsidy.

Source: Senegal, Bureau of Mines.

The other major beneficiaries of the Government's energy pricing policy are the Dakar Free Trade Zone (where industries can purchase power from SENELEC at preferential rates) and those subscribers to electric service from the central grid who, as previously discussed, receive de facto subsidies due to SENELEC's uniform pricing structure. The sale of electricity at uniform rates to all cities and towns on the grid is one element of an industrial decentralization program designed to attract new industry to Senegal's smaller cities and towns by making their production costs more competitive with Dakar. The Fifth Plan suggests that costs might also be lowered through preferential treatment of gas-oil purchases by firms pro-

viding transportation to and from such areas. No action has yet been taken in this regard, however. Nor, as far as is known, has any measure been adopted that would serve to reduce the cost of fuel used in Senegal's agricultural sector. In fact, it is understood that one proposal which would have benefited farmers using irrigation pumps in the Senegal River Valley by removing the tax on diesel oil was rejected by the Government.

Renewable Energy Resources Development

One reason why the Government may be reluctant to make imported fuels available to the agricultural sector at favorable prices is that it is looking to domestic resource applications to satisfy many of the future energy needs of rural communities in Senegal. While a renewable energy research plan is still in the process of preparation, a number of priority areas for action have alaready been identified by the DGRST (Délégation Générale à la Recherche Scientifique et Technique), which is the organization responsible for all Government-sponsored research activity in Senegal.9/ These include energy for (1) pumping water, (2) cooking, and (3) food processing and preservation. A fourth priority area involves the use of solar technology to produce electricity at isolated secondary generating plants.

A number of renewable energy installations and research projects have been proposed by the DGRST for funding during the period of the Fifth Plan. Some of these proposals have already been financed by development assistance agencies, including a FAC pilot project to test the performance of a 10 KW thermodynamic pump for water supply and irrigation in Bondie Samba (Sine-Saloum) and a FED/CARITAS project to install 2,600 peak watt photovoltaic pumps at three village sites in the M'bour area (Thies) at a cost of about $70,000 per unit. Other proposals are still under study, among

---

9/ This agency was recently elevated to ministerial status and now bears the title of Secretariat d'Etat à la Recherche Scientifique et Technique.

them the construction of powerful solar deep well pumps for use in the New Lands area of Senegal Oriental, where most water is found at depths of 60 meters, and the establishment of two experimental rural village energy centers for the testing and evaluation of low-cost renewable energy applications. In the area of applied research, a variety of projects are suggested, ranging from design and construction of a multi-purpose solar distiller, to research on solar energy storage systems, to a study of solar energy materials suitable for use as insulation. The DGRST has also proposed that a Center for Research on Renewable Energy be created to direct and fund these research efforts.

It is expected that the DGRST's renewable energy research plan will establish priorities among these and other activities concerned with solar energy resource development in Senegal. The balance of this report is intended to contribute to that plan through analysis of how energy is used in selected areas of the food system and identification of opportunities for energy-related intervention.

INTENTIONALLY
LEFT
BLANK

Chapter Four

ENERGY USE PROFILES

A. SCOPE AND METHODOLOGY

This chapter examines the structure and energy consumption patterns of five key areas of the food system in Senegal. Four of the five areas represent distinct product systems: rice; groundnuts; millet and sorghum; and fish caught by artisanal methods. In each case, the various processes involved in the production and distribution of a single food product, up to but not including its preparation for eating, are subjected to analysis. The fifth area of concern is the final stage of the food system: the cooking of foods consumed in rural and urban homes.

Selection Rationale

The following criteria were taken into account in selecting areas of the food system for analysis:

(1) The instructiveness of the analysis for identifying energy-related problem areas and assessing opportunities for energy-related improvements;

(2) The significance of the food in terms of levels of land use and agricultural production;

(3) The priority given to the food in the national development plan;

(4) The importance of the food in the Senegalese diet, and especially in the diets of low-income people;

(5) The importance of the food in generating incomes for low-income families; and

(6) The susceptibility of the analysis to international comparison.

Each choice fulfills the first, and at least three of the remaining five, criteria. Rice is regarded as a particularly important food for study because of the priority given to this crop by the Government, because

of the variety of production techniques employed, and because of the potential for using resulting data for purposes of international comparison. Groundnuts are considered important because they are produced on more than 40 percent of Senegal's cultivated area, because they are the principal source of cash income for the nation's rural population, and because groundnut producers are the object of major Government development programs aimed at raising levels of technology and production yields. Moreover, the processing system for groundnuts relies on both imported fossil fuels and domestic crop by-products, offering opportunities for comparative analysis not afforded by other aspects of Senegal's food system.

The choice of millet and sorghum (as one combined food crop) rests on their importance as Senegal's principal subsistence food grains and the vital nutritional role they serve among low-income rural families. In addition, the low productivity, substantial losses, and time-consuming processing methods characteristic of this component of the food system may signal a need for higher levels of energy use than has been the case to date. Similar arguments hold true with respect to the processing and distribution of artisanally-produced fish, which is also important as a major source of animal protein in the Senegalese diet and as an income producer for rural villagers living on the coast.

Time and budgetary limitations preclude detailed analysis of other important components of the food system, most notably those pertaining to the production and distribution of vegetables and livestock products. Although the current Plan puts some emphasis on market gardening and stockraising, these activities affect a smaller percentage of Senegal's rural population, in terms of both nutrition and income, than those associated with rice, groundnuts, millet and fish.

The final area of the food system chosen for study is food preparation, specifically cooking. Cooking is regarded as an important subject for analysis because of the Government of Senegal's expressed concern with depletion of forest resources and dwindling fuelwood supplies. In urban

areas, where charcoal is the principal cooking fuel, supply constraints have driven prices to a point where they now represent a significant drain on the incomes of low-income families. In rural areas, where most meals are prepared over firewood, excessive cutting of trees for fuel has led to soil erosion, desertification, and other forms of pressure on the natural envir onment. The time spent searching for firewood -- up to five hours daily in some areas -- also represents a significant loss of productivity on the part of women and children who perform this task.

Cooking is dealt with as a separate process, rather than as the final step in each discrete food product system, for two principal reasons. First, opportunities for energy-related improvements in this area are likely to involve the fuels and energy conversion technologies utilized to cook a meal, rather than the contents of the meal itself. Second, the existing data do not permit food-specific assessments of energy requirements, nor would such assessments be very meaningful in the case of Senegal where several foods are usually prepared together in a single pot.

Analytical Framework

The objective of the energy use profile analyses in Sections B through F of this chapter is to describe the principal components of each food product system in a manner which shows: (1) alternative methods employed to accomplish a given product transformation activity or task; (2) the types and amounts of energy required for transformation; (3) the volume of product losses incurred during transformation; and (4) any other pertinent data that would help to identify and assess important areas for improvement. The term transformation is defined for these purposes as any change in product nature (through production, processing, or cooking), place (through transport and/or distribution) or time (through storage).

Key energy input-product output relationships are summarized on a product flow chart and accompanying reference tables near the conclusion of

each analysis.1/ The flow chart is divided vertically into columns representing major transformation activities, and horizontally by solid lines representing alternative transformation methods. Dotted lines are used in cases where no transformation takes place. The numbers entered above each solid line show volume of product handled (on the left) and net product output (on the right), the difference being losses incurred in transformation. Each solid line is also assigned a number (1.1, 1.2, etc.) which refers to information contained in the reference tables.

Every product flow chart is supported by two reference tables, the first showing the requisite energy input-product output data in aggregate terms, the second showing these same data on a per-ton-of-net-product-output basis. The data are derived for the most part from secondary source materials and are intended to roughly approximate energy input-product output relationships in Senegal in a recent typical year. Due to lack of data, no accounting has been made of pre-harvest losses, although such losses could easily be reflected in the chart and tables if their magnitude were known.

Only readily quantifiable, recurrent energy inputs like fuels, fertilizers, and pesticides are listed in the reference tables. While a more complete documentation of energy use in the food system would need to take into account such inputs as human and animal labor, energy expended in transporting fuels and chemicals to point of use, and energy embodied in capital equipment, such information was not felt to be necessary for purposes of this study. Human and animal labor inputs are, however, considered in the text, as overall scarcity of agricultural labor can be a significant production constraint.

1/ See Exhibits 4.7, 4.16, 4.21, and 4.27. No product flow chart is provided for the profile analysis of cooking methods because this analysis is primarily concerned wtih fuel use and fuel conversion processes rather than with energy input-product output relationships.

Each profile analysis concludes with a brief discussion of energy-related problems and opportunities. These problems and opportunities are treated in more detail in Chapter Five of the report.

B. MILLET AND SORGHUM

Background

Millet2/ is the most important cereal crop grown in Senegal in terms of both production and consumption. Its short cycle, minimal water requirement, and adaptability to a variety of soils, even those with low fertility, make this crop particularly well suited to local growing conditions. Three varieties are cultivated: early pearl millet (known as souna), accounting for 45 percent of national production; a longer cycle pearl millet (sanio) accounting for 25 percent of production; and sorghum (sorgho) accounting for 30 percent of production. Especially when grain stocks have been depleted, early millet is prized for its rapid maturation. The varying cycles of the millets and sorghum allow farmers to spread out the labor requirements for harvesting of both the grain and groundnut crops. Some groups prefer certain varieties to others, with the Serer, for example, preferring sorghum.

Although millet is raised throughout the country, almost 70 percent of the total production comes from the Groundnut Basin, where it is grown in association with groundnuts. A farmer will spend about 30 to 35 percent of his time in the fields cultivating millet, and the rest working on his groundnut crop. Typically, the groundnuts are sold for cash, while the millet is retained for consumption by the farmer and his family. Nevertheless, an estimated 20 percent of millet production is traded, as repayment to local lenders for loans, in rural markets, or in villages where it is used in small quantities (1 or 2 kilos) as a means of barter.

2/ For purposes of this analysis, millet and sorghum are considered as a single crop, henceforth referred to as millet. In Senegal, the two are not differentiated either in statistics or methods of production, except in the case of the sorghum produced in the Senegal River Valley under flood recession cultivation.

As a general rule, only as much millet as is necessary to meet the family's subsistence needs is planted in order to maximize the production of the valuable groundnuts. In practice, the optimal ratio for the separately allocated lands approaches unity and, taken together, millet and groundnuts represent nearly 85 percent of the total crop area in Senegal. An estimate of the size of millet farming units and area cultivated by agricultural zone is provided in Exhibit 4.1.

The area devoted to millet cultivation does not change very much from year to year (see Exhibit 4.2); however, farmers do make some adjustments to variations in crop prices and the weather. For example, millet output generally increases when groundnut prices are low or when groundnut production has been constrained by inadequate rainfall. More millet is also produced when consumers shift to millet in the face of mounting prices for rice, since millet is not only a staple in the diet of the rural Senegalese, but is consumed in significant quantities by their urban countrymen as well.

Exhibit 4.2 shows that the amount of land sown in millet each year in the period from 1965 to 1975 remained fairly constant, averaging about 1,040,000 hectares annually. Average production was about 533,000 tons per annum, with a maximum of 708,000 tons in 1975 when especially favorable growing conditions obtained.

Annual variations in domestic production are reflected in the quantities of millet that Senegal must import. Thus in a good year such as 1975, only 7,000 tons were imported, whereas in drought years, imports have risen to as high as 41,000 tons.

An important objective of the Government of Senegal is to narrow and eventually eliminate this food grain deficit. The current Plan sets a gross production goal of 750,000 tons by 1981, which represents an increase of 40 percent over the average level of production prevailing between 1965 and 1975. The strategy for achieving this growth calls for a small (less

Exhibit 4.1

Estimated Number and Size of Millet Farms by Agricultural Region

Region	Number of Farm Units	Millet Area per Unit (ha)	Total Millet Area (ha)	Share (percent)
Fleuve	31,000	3.0	93,500	9.6
Senegal Oriental	37,500	2.1	78,000	8.0
Casamance	77,000	1.3	96,800	9.9
Northern Groundnut Basin	81,000	2.8	230,000	23.5
Central Groundnut Basin	57,000	2.8	159,000	16.2
Southern Groundnut Basin	77,000	4.2	321,000	32.8
Total Senegal	360,500	2.7	978,300	100.0

Source: World Bank. Data discrepancies due to rounding and weighting of base estimates.

Exhibit 4.2

Millet and Sorghum: Production and Cultivated Area, 1965-1975

	Production (thousand tons)	Area (thousand ha)	Yield (kg/ha)
1965	532	1,010	527
1966	554	1,070	518
1967	423	967	437
1968	654	1,156	566
1969	450	1,064	427
1970	633	1,055	600
1971	402	960	419
1972	583	975	598
1973	323	936	345
1974	609	1,094	557
1975	708	1,154	614

Source: "Senegalese Industry," Marchés Tropicaux et Méditerranéens, op. cit., with modifications in 1974 and 1975 production data based on World Bank reports.

than 10 percent) expansion in cultivated area and a significant (nearly 40 percent) increase in per hectare yields.

A major barrier to growth in millet production has been the absence of effective marketing and price policies. Until now, farmers have had little incentive to produce surplus millet as opportunities for marketing have been limited, and official prices have been lower than prices prevailing on the parallel market. Thus, with allowance for losses and seeds, 1981 output may still fall short of domestic demand. However, the World Bank predicts that, if Government efforts to raise millet productivity succeed, Senegal will actually be exporting millet by 1990 (Exhibit 4.3).

Exhibit 4.3

Trends in Foreign Trade in Millet and Sorghum
(thousand tons)

	Net Output	Imports (Exports)	Apparent Demand
1969-71 (av.)	542	34	576
1974	609	7	616
1981	660	64	724
1990	920	(47)	873

Source: World Bank.

System Methods, Costs and Energy Requirements

Production

Although millet in Senegal has been traditionally produced by the hand labor of the extended family, in recent years modifications involving chemical additives and animal traction have been introduced. Exhibit 4.4 sum-

Exhibit 4.4

Millet Technologies Practiced in Senegal

	Traditional	Minimum Package	Comprehensive Improved: Fertilization	Comprehensive Improved: Plowing and Fertilization	Comprehensive Improved: Intensive
INPUTS					
1. Land Development				Stump removal 0-150 man-days/ha	Stump removal- 0-150 man-days/ha
2. Equipment					
Horse	No	Yes	Yes	Yes	Yes
Pair of oxen	No	No	No	Yes	Yes
Plow	No	No	No	Yes	Yes
Harrow	No	No	No	Yes	Yes
Planter	No	Yes	Yes	Yes	Yes
Hoe	No	Yes	Yes	Yes	Yes
Cart	No	No	Yes	Yes	Yes
3. Supplies (per ha)					
Seed	5 kg	5 kg	5 kg	5 kg	5 kg
Fungicide	0	200 g	200 g	200 g	200 g
Fertilizer	0	0	150 kg 14-7-7	150 kg 14-7-7	(100 kg 10-21-21 (50 kg urea
Insecticide	0	0	0.5 kg	0.5 kg	0.5 kg
4. Labor (man-days/ha)					
Plowing	0	0	0	5 (oxen)	5 (oxen)
Harrowing	15 (hand)	4 (hand)	4 (hoe)	2 (hoe)	2 (hoe)
Seeding	5 (hand)	5 (hand)	2 (seeder)	2 (seeder)	2 (seeder)
Thinning and Hand weeding	20-45	10	10	10	10
Weeding (Hoe)	0	8	8	8	8
Fertilization	0	0	1 (hand)	1 (hand)	2 (hand)
Harvesting	6-15 (hand)	12-18 (hand)	15-22 (hand)	18-25 (hand)	20-30 (hand)
Threshing	12-18 (hand)	15-20 (hand)	18-25 (hand)	22-28 (hand)	25-35 (hand)
Transportation	1-4 (hand)	1-4 (hand)	1 (cart)	1 (cart)	5 (cart) 1/
Total	59-102	56-69	59-72	69-82	79-99

OUTPUT (kg/ha)

	Traditional Grain	Traditional Stover	Minimum Package Grain	Minimum Package Stover	Fertilization Grain	Fertilization Stover	Plowing and Fertilization Grain	Plowing and Fertilization Stover	Intensive Grain	Intensive Stover
Senegal River	200	800	-	-	-	-	-	-	-	-
N. Groundnut Basin	300	1,000	400	1,500	600	2,000	-	-	-	-
C. Groundnut Basin	400	1,500	550	2,000	850	3,000	1,000	3,500	-	-
S. Groundnut Basin and E. Senegal	500	1,800	650	2,500	1,000	3,500	1,300	4,000	1,600	5,000
Casamance	800	2,500	1,000	3,000	1,300	4,000	1,600	5,000	1,800	5,000

1/ Transportation of both grain and stover.

Source: World Bank.

marizes the components of the traditional (basic) production method and four of its modernized variants. As is evident from Exhibit 4.5, the application of modern technology has been uneven both within and between regions. This is attributable to several factors, including lack of attractive prices, market outlets, and other incentives for farmers; the inability of poorer farmers to finance improved inputs when the bulk of the crop in autoconsumed (although this is less true for equipment and draft animals which can be used on both cash and food crops); and limited research and scientific knowledge of local strains and how to improve upon them.3/ As a result, 58 percent of all millet was still being produced by traditional methods in the early 1970's, even though modern inputs are used far more extensively in Senegal than in other countries of the Sahel.

Under the traditional millet production system (except for flood-recession production in the Fleuve), fields are cleared before the onset of the rainy season. If the land has been lying fallow, bushes and small trees are cut down and burned. In some areas of the country, especially in the Southern Groundnut Basin, soil fertility is maintained through applications of animal manure, usually by penning the animals in the unplanted fields at night.

After the first major rains arrive sometime in late June or early July, holes are dug in rows about 80 cm apart and a few millet seeds, retained from the previous year's harvest, are dropped in each hole and covered with earth. Two weeks later, cowpeas or yams may be planted between the millet stalks. Simultaneously, the highly labor intensive procedure of hand weeding begins. As shown in Exhibit 4.4, the high investment of man-days per hectare (ranging from 20-45) that must be allocated to weeding under the traditional system places severe constraints on production.

3/ In the past, and especially under the colonial government, agricultural research activities were focussed on the groundnut crop. Although the Government is now devoting considerable research attention to millet and sorghum, it will take time to produce effects in the field.

Exhibit 4.5

Senegal: Millet System

Percentage Distribution of Millet Technologies by Agricultural Zone

Technology \ Region	Fleuve		Groundnut Basin		Casamance and Senegal Oriental	
	Hectares (thousand)	Share (percent)	Hectares (thousand)	Share (percent)	Hectares (thousand)	Share (percent)
Traditional	93.5	100.0	355.3	50.0	122.4	70.0
Treated Seeds (Minimum Package)	-	-	248.7	35.0	43.7	25.0
Comprehensive Improved	-	-	106.6	15.0	8.7	5.0
Total	93.5	100.0	710.6	100.0	174.8	100.0

Source: World Bank.

In September and October, at the conclusion of the rainy season, the millet is harvested with a machete. The millet tops are gathered into sheaves, carried by the farm women and children back to the farm compound, and then placed on pallets to dry for about 12 weeks.4/

Yields under the traditional system of millet cultivation range from a low of 200 kg/ha in the Fleuve Region to as high as 800 kg/ha in the Casamance where rainfall and soil conditions are most favorable. Between 800

4/ A grain dryer developed by the International Development Research Center can dry bundles of millet in one-third to one-half this amount of time. It is currently being tested in a village in west central Senegal as part of a Post-Harvest Technology System which also includes cement storage units and mechanical grain processing facilities.

and 2,500 kg/ha of stover are also produced for animal feed, fencing, and other uses (granary construction, thatching, baskets, etc.)

Modernized variations of this traditional method range from a "minimum package," which differs from the traditional method only in its use of fungicide-treated seeds and horse or donkey traction, up to an "intensive" method which involves the use of treated seeds, fertilizers, and oxen for plowing and other cultivation tasks.5/ Occasionally, insecticides are used and basic irrigation may be practiced when near-surface ground water is available. Farmers may also barricade their fields with brush or wooden fencing to protect them from foraging livestock.

All of these improvements have a favorable effect on yields, which vary from 400 kg/ha when the "minimum package" is used in the northern part of the Groundnut Basin to 1,800 kg/ha in the Casamance under the most intensive cultivation system. Stover yields are usually three and one-half times the yield in grain.

Annual production costs (exclusive of family labor, draft animals, and equipment amortization costs) vary from under $1.00 per hectare when no commercial inputs are used, to about $20.00 per hectare when treated seeds and fertilizers are purchased and applied. At farmgate prices of $152/ton prevailing during the 1976/77 crop year, output value per hectare would average around $75 for the country as a whole, with a range of $30 to $275 per hectare for farms with yields at the bottom and the top end of the productivity scale.

5/ ONCAD encourages farmers to use the products of modern agricultural technology. It supplies them with improved seed varieties, fertilizers, fungicide and agricultural equipment but does not require payment until the crops have been harvested and marketed; however, since only a small proportion of the millet crop is placed on the market, it is often difficult for farmers to finance these inputs. In addition, farmers growing millet in the Groundnut Basin receive extensive services from SODEVA, the regional promotional institution which assists ONCAD and the local cooperatives in estimating input needs and providing instruction in their proper application.

Fungicides, insecticides and fertilizer, when used, are the major commercial energy inputs involved in millet cultivation. In the Central Groundnut Basin, 0.7 kg of insecticides and fungicides and 150 kg of fertilizer (14-7-7) are recommended per hectare. Fertilizer application rates are somewhat lower in the Northern Basin, where the use of commercial inputs is less profitable. Under more intensive production systems such as are found in the higher rainfall areas of Sine Saloum and Senegal Oriental, 150 kg of 10-21-21 and 50 kg of urea/hectare are recommended, along with applications of rock phosphate which are plowed into the soil at the rate of 400 kg/hectare every four years. Exhibit 4.6 shows the estimated quantities of fertilizer and pesticides used annually by region between 1968 and 1972. It should be noted that the amount of fertilizer distributed to millet producers in the 1976/77 crop year was about twice that shown in Exhibit 4.6, suggesting that the use of improved methods of millet cultivation may now be more widespread than the data in Exhibit 4.5 indicate.

Exhibit 4.6

Senegal: Millet System

Energy Requirements Per Hectare of Millet/Sorghum Production in Senegal (1968-72 Averages)

Inputs / Region	Insecticide and Fungicide			Fertilizer		
	Usage (kg/ha)	Hectares (thousand)	Total (tons)	Usage (kg/ha)	Hectares (thousand)	Total (tons)
Fleuve	-	-	-	-	-	-
Groundnut Basin	0.7	355.3	248.7	150	106.6	15,990
Casamance and Senegal Oriental	0.7	52.4	36.7	150	8.7	1,305
Total Senegal	0.7	407.7	285.4	150	115.3	17,295

Source: Calculated from World Bank data. Fertilizer usage on millet fields was approximately double the amounts shown in this Exhibit during the 1976/77 crop year.

Storage

Although millet may be stored in the warehouses of ONCAD-approved wholesalers and cooperatives and at ONCAD's own regional storage facilities, the great bulk of stored millet, some 95 percent, is placed in granaries at the household or village level. These usually are made of poles interwoven with millet straw and sometimes daubed with clay. The granaries are raised on stilts to prevent rodent depredations, and are covered with straw and millet stalks for protection from the rain.

Commercial pesticides are rarely used in household or village granaries. However, many millet farmers do not thresh, or only partially thresh, their grain prior to storage, practices which are believed to offer some protection from insect infestation. A smaller number of farmers pack their grain in sand or ashes to control insect movements.

Such preventive methods no doubt reduce storage losses, but just how effective they are remains an issue. For example, one study by the Kansas State Senegalese Grain Storage Mission estimated that storage losses during the first year were as low as 3 percent, whereas another study carried out by SONED estimated the figure for storage losses to be between 20-25 percent.6/ For purposes of this analysis, a 15 percent loss is assumed, attributable to a combination of factors the most important of which are rodents, insects, mildew, fire, and theft.7/ In an effort to reduce the

---

6/ See W.P. Spencer, et. al., Recommendations for Grain Storage and Preservation in Senegal, Kansas State University, Food and Feed Grain Institute, Report No. 54, Nov. 1975; and SONED, Etude sur la Commercialisation et le Stockage des Cereales au Senegal, Dakar, 1977.

7/ In a recent survey covering a sample of rural villages throughout the country, more than 75 percent of the respondents cited rodents as their most significant grain storage problem. Other problems and their frequency of mention were insects (about 50 percent), mildew (30 percent), and fire and theft (nearly 30 percent). See Yaciuk and Yaciuk, Discussions des Resultats de l'enquete sur la technologie post-recolte en milieu paysan au Senegal, ISRA, November 1977.

rate of loss, SODEVA and CNRA-Bambey are experimenting with new techniques of village and household level storage, including the use of tin-covered cement units and periodic applications of chemical pesticides.

As mentioned above, small quantities of millet are stored by a number of wholesalers who have satisifed ONCAD that they have adequate facilities to accommodate their monthly quota of grain. The remaining small amount of stored millet is handled by ONCAD's own regional warehouses and mobile units, which have a combined grain storage capacity of 39,000 tons. ONCAD stores grain in these regional facilities largely to provide grain loans during the soudure period.

ONCAD has also launched a program of warehouse construction, with a planned capacity of 35,000 tons. This will increase its ability to maintain security stocks of grain and by so doing, to intervene in the marketplace during periods of surplus and deficit production.

Apart from the electricity used to provide lighting, ventilation, and motive power in some warehouse facilities, the chemicals applied to control rodents and other pests are the principal commercial inputs involved in millet storage. It is estimated that about five percent of the total volume of millet stored in Senegal is protected by commercial pesticides; however, no information is available on the amount of such chemicals currently in use.

Processing

In Senegal, most millet is manually processed by the women of the household. Three principal tasks, and several sub-tasks, are involved. First, the millet is threshed to separate the grain from the head. Next, the grain is dehulled and winnowed to remove the hull or bran. Finally, the grain is crushed or ground into flour or meal, and if necessary, sieved to separate the flour from the coarser pieces of broken grain. Threshing, dehulling, and grinding are all performed by pounding the millet heads or

grains in a large wooden mortar with a pestle, which is usually about 1.5 meters long and weighs between two and three kg. For winnowing, a flat straw tray called a vanneur is used to toss the mixture of grain and chaff into the air and collect the grain as it falls.

Hand threshing and grinding are especially time-consuming tasks, taking an average of 4 hours and 24 hours respectively for every 100 kg of product handled. As a rule, relatively large amounts of grain are threshed at one time. Dehulling and grinding, on the other hand, are generally daily tasks because millet, unlike maize and other grains, does not keep well once the hull has been removed.

In some rural villages, mechanized equipment is available for threshing, dehulling, and grinding millet and other grains. Among the equipment used is the Bambey thresher, which was designed at CNRA and is made in Senegal by SISCOMA. This machine, powered by tractor or auxilliary 35 h.p. motor, is capable of threshing from 1.0 to 1.3 tons of millet per hour. SISCOMA also sells other machines designed to clean, grade, grind and remove stones from grain, including a multi-purpose crusher, powered by a 10 h.p. diesel motor, which grinds and crushes dry grain into meal or flour. That the Senegalese are appreciative of the benefits attendant to mechanical processes can be seen from a study conducted by a researcher from Purdue University, who found that threshing and grinding machines are used regularly by villagers if they have the cash, and especially during harvest periods, when labor is short and women must work in the fields.8/

It is estimated (subject to field verification) that only five percent of the millet produced each year in Senegal is processed by machine methods. Most of the equipment in use is designed for grinding, and is owned

---

8/ See Edna E. Loose, "Women in Rural Senegal: Some Economic and Social Observations," a paper prepared for the Workshop on Sahelian Agriculture, Purdue University, February 1-2, 1979. Ms. Loose also observed that men were willing to take over responsibility for threshing grain when threshing machines were available. Dehulling and grinding, however, were still considered to be women's tasks.

and operated by local entrepreneurs who charge about $0.03 to grind a kilo of grain. No data are available on the amount of fuel required to operate these grinding machines. However, SODEVA estimates that a mechanical thresher with an effective yield of 575 kg/hour over one season (allowing time and fuel for deplacement), uses 3.2 liters of fuel per hour.9/

With respect to future fuel requirements for processing, one potential source of demand should be noted. In the hope of reducing domestic consumption of imported rice and wheat, the ITA has developed a dry, stabilized millet flour which can be used to make instant couscous or blended with wheat flour to make bread. At present neither the flour nor the bread is marketed on a large-scale basis.10/ However, the Institute plans to promote consumer acceptance of these products through advertising and, if successful, to have them produced by commercial mills and bakeries for sale in urban areas. Considerably more fuel energy would be needed to handle millet in these industrial facilities than is currently used in the entire millet transformation process.

Distribution

Between 85 and 90 percent of all millet produced in Senegal in a typical year is consumed within the producing household or used to repay debts or social obligations. Most farmers are reluctant to part with their millet unless in urgent need of cash. Still, except in years of exceptionally poor harvests, some millet sales are made. Women may sell small quantities

---

9/ See SODEVA, Programme d'Evaluation Agricole et de Production Céréales du Sénégal. Rapport d'Evaluation - Campagne 1976-77. (Dakar, April 1977).

10/ Only imported millet is milled by the large grain mills, as the domestic market cannot guarantee adequate supplies of grain for industrial-level processing. Thus, one obstacle to the substitution of millet for wheat flour relates to the inadequacy of the domestic millet marketing system.

to pay for condiments and spices, and household heads may take millet out of storage as needed to finance family and religious celebrations. In this sense, surplus millet is a liquid asset which can serve as a hedge against the future.

While some surplus millet is sold directly to consumers, and some is marketed by relatives who reside in urban areas,11/ the great majority goes through one of two millet distribution networks: the traditional or parallel network, which is now illegal; and the official network, which is organized and run by ONCAD.

Although the traditional system was outlawed in 1977, as much as two-thirds of the surplus production is still sold in this manner. The first stage in the network is for the farmer to bring his threshed millet to his own or a nearby village, travelling either on foot or with an animal-drawn cart. There at buying posts (boutiquiers) set up expressly for the purpose, he sells it to an agent operating on behalf of a regional grain merchant. (These buying posts may also serve as informal lending institutions, extending farmers credit to purchase various commodities such as coffee, tea, sugar and salt. Debts are then repaid in millet following harvest.) In due course, the merchant collects the millet from his buyers and has it transported by truck or cart to a collection center. Then, after having identified millet deficit areas, he sells the millet at these locations through itinerant traders (called bana-bana), resident relatives, or his own buying agents. Millet distributed in the traditional manner is usually traded in small amounts, seldom exceeding 25 kg per sale.

11/ Although it is illegal to transport millet from one region to another for marketing purposes, urban members of a family may obtain authorization from the Ministry of Commerce to receive and transport for personal consumption only up to 10 kg of millet from rural relatives. Not too surprisingly, some of this millet reaches an urban market before it reaches an urban household. The Ministry authorized transfers of about 2,000 tons in 1976.

For several reasons, and despite its monopoly position, ONCAD handles no more than six percent of the millet produced in Senegal. In years when production is low, most of the output is retained by farmers for family consumption. When there are surpluses, some of the surplus is used to repay debts to traders, who work almost exclusively through the parallel marketing system. Nor has ONCAD provided producers with much incentive to sell their millet through official channels, largely because its millet marketing activities have not been profitable, and it has preferred to concentrate its limited resources on the distribution of groundnuts and imported rice. Whereas cooperative chairmen are paid commissions for the groundnuts which are marketed through their coops, no commissions are paid for millet; thus, there is little reason for the coops to encourage millet sales. Also, ONCAD insists upon a minimum sale of 100 kg, whereas most farmers prefer to make smaller sales in accordance with their need for cash and the level of their grain reserves. Finally, except for the two or three months following harvest, the official millet price is often less than prices prevailing on the parallel market. Thus, unless the producing household can thresh its millet in the brief period before it must turn its attention to the groundnut crop, it is better off selling illegally.

In fulfillment of its legal responsibility for marketing millet, ONCAD authorizes the cooperatives to buy surplus output on its behalf, in addition to running its own distribution centers (called seccos). In areas where there are no cooperatives or seccos, ONCAD sends trucks equipped with scales to villages to purchase millet. The millet purchased by ONCAD is stored in regional distribution centers, and later sold to other cooperatives, to approved grain wholesalers, and occasionally to retail stores. Cooperatives which buy millet in this manner will lend it to members whose millet stores have been exhausted prematurely, with the understanding that the loan will be repaid in kind (with a 25 percent surcharge) after the next harvest. This system was established during the last drought period so as to ensure that adequate stores of grain were available in those areas most severely affected by the drought.

It is difficult to estimate energy consumption in the parallel marketing system. Rural police patrols periodically check cars and trucks for evidence of illegal grain movements, but the cost of these controls limits their extent, and vehicles carrying illegal loads of millet often manage to avoid them. While the use of poorly maintained back roads and roundabout routes to avoid the police may entail higher energy costs, no data are available to document the extent of this practice.

It is estimated that 60,000 tons of domestically-produced millet are marketed in Senegal in a typical year, of which about 40,000 tons are transported by open-bed trucks over an average distance of 100 km. This includes virtually all of the millet handled by ONCAD (about 10,000 tons in 1976), plus about half of that distributed through illegal channels. Using an average fuel consumption rate of .08 liters per ton/km, total gasoline consumption would amount to 320,000 liters, plus approximately 16,000 liters of oil and other lubricants. It is assumed that the balance of illegally marketed millet is transported by hand and animal-drawn carts.

Energy Input-Product Output Summary

The product flow chart in Exhibit 4.7 summarizes the alternative methods by which millet is produced, stored, distributed, and processed in Senegal and the tonnage handled by each method in a typical year. Losses and waste products (stover) are also shown in this exhibit. The accompanying reference tables, Exhibits 4.7A and 4.7B, provide an estimate of the commercial fuel and chemical inputs attributable to each method on an aggregate and per ton product output basis, respectively.

The product flow chart shows the type of process in the vertical columns, numbered 1.0 for agricultural production, 2.0 for storage, 3.0 for transport, and 4.0 for processing. Within each column one or more alternative methods of performing that particular process are shown. For example, storage may be accomplished either in the household granary (2.1) or in the warehouse (2.2). The product, in this case millet and sorghum,

Exhibit 4.7

SENEGAL'S MILLET AND SORGHUM SYSTEM: PRODUCT FLOW
(in '000 tons raw product equivalent)

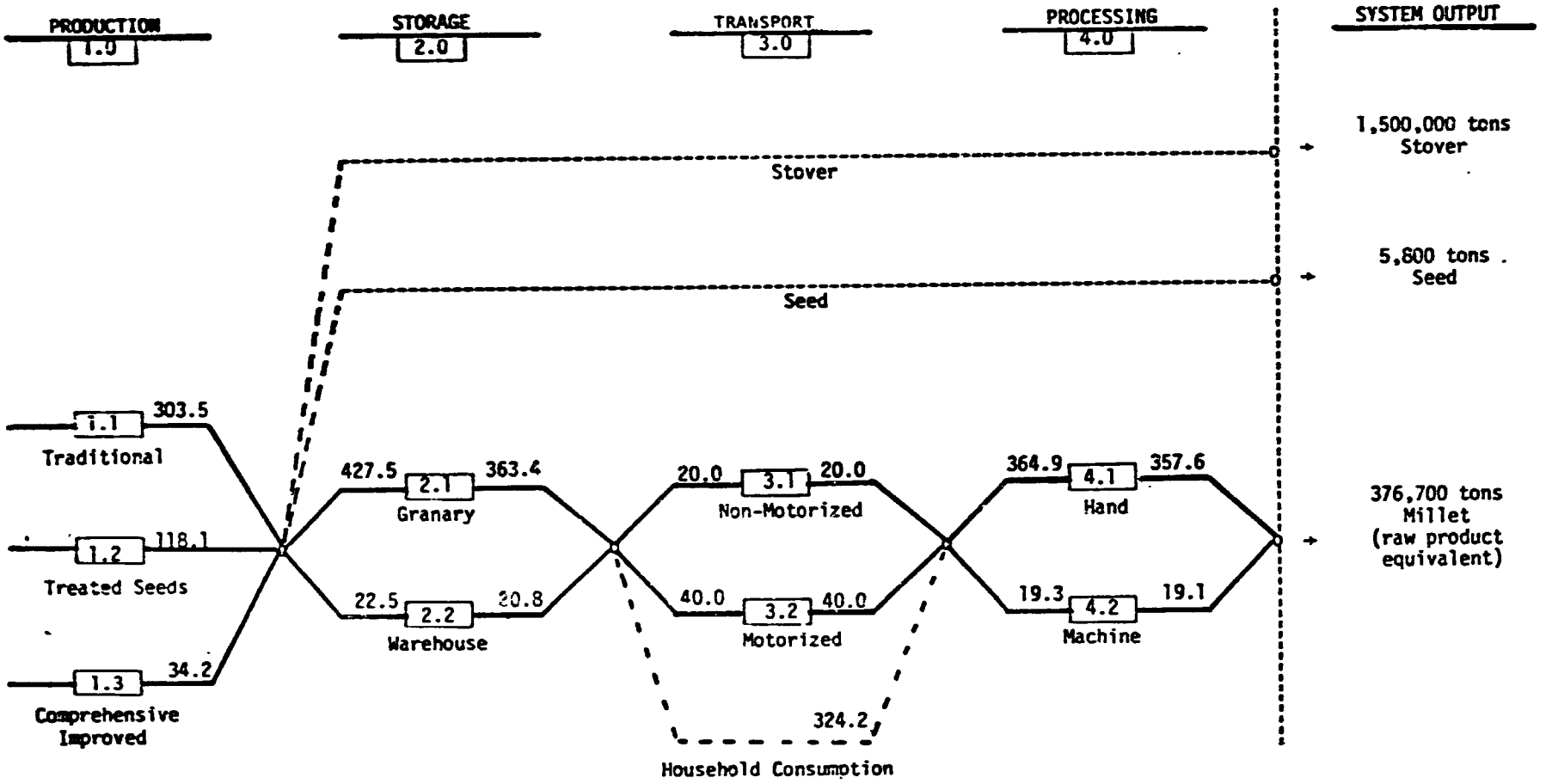

Table 4.7A

Senegal's Millet and Sorghum System

Total Energy Inputs, Product Losses, and Net Product Output, By System Activity and Method

Ref.	Activity (Method)	Edible Product[1/] Net Output (tons)	Edible Product[1/] Losses (tons)	Energy Inputs: Liquid Fuel (kl)	Energy Inputs: Fertilizers (tons)	Energy Inputs: Other Chemicals[2/] (tons)
1.0	PRODUCTION					
1.1	Traditional	303,500	-	-	-	-
1.2	Improved (treated seeds)	118,100	-	-	-	204.7
1.3	Improved (comprehensive)	34,200	-	-	17,295	80.7
2.0	STORAGE					
2.1	Granary	363,400	64,100	-	-	n.a.
2.2	Warehouse	22,500	1,700	-	-	n.a.
3.0	TRANSPORT					
3.1	Non-Motorized (human or animal-drawn cart)	20,000	-	-	-	-
3.2	Motorized (gasoline pick-up)	40,000	-	336	-	-
4.0	PROCESSING					
4.1	Hand (mortar and pestle)	357,600	7,300	-	-	-
4.2	Machine (diesel thresher, dehuller, and grinder)	19,100	200	n.a.	-	-
	TOTAL	376,700	73,300	n.a.	17,295	n.a.

n.a. = not available.

1/ In raw product equivalents.
2/ Insecticides and fungicides.

Table 4.7B

Senegal's Millet and Sorghum System

Energy Inputs and Product Losses per Ton of Net Product Output, By System Activity and Method

Ref.	Activity (Method)	Edible Product[1/] Net Output (tons)	Edible Product[1/] Losses (tons)	Energy Inputs: Liquid Fuel (liters)	Energy Inputs: Fertilizers (kg)	Energy Inputs: Other Chemicals[2/] (kg)
1.0	PRODUCTION					
1.1	Traditional	1	-	-	-	-
1.2	Improved (treated seeds)	1	-	-	-	1.7
1.3	Improved (comprehensive)	1	-	-	505.7	1.7
2.0	STORAGE					
2.1	Granary	1	0.176	-	-	n.a.
2.2	Warehouse	1	0.075	-	-	n.a.
3.0	TRANSPORT					
3.1	Non-Motorized (human or animal-drawn cart)	1	-	-	-	-
3.2	Motorized (gasoline pick-up)	1	-	8.4	-	-
4.0	PROCESSING					
4.1	Hand (mortar and pestle)	1	0.020	-	-	-
4.2	Machine (diesel thresher, dehuller, and grinder)	1	0.010	n.a.	-	-

n.a. = not available.

1/ In raw product equivalents.
2/ Insecticides and fungicides.

flows from left to right through the various processes and alternative transformation methods. The quantities handled by each method are entered above the solid line, with the left entry showing the inflow and the right entry the outflow. Thus, incoming millet and sorghum stored in household granaries (Number 2.1) amount to 427,500 tons of raw product equivalent, while output from storage is 363,400 tons, indicating a storage loss of 64,100 tons or 15 percent. A dotted line denotes a bypass without product transformation.

As the data in the tables indicate, millet makes relatively few demands on Senegal's energy system. Most of the output is produced by traditional methods and storated and processed withi the area of production. While some commercial fertilizers and pesticides are used, quantities are small in absolute terms and by comparison with what would be required if these chemicals were to be applied at the recommended rate on every millet field in Senegal. If, for example, the total area cultivated in millet in an average year (about one million hectares) were to receive a single dosage of compound fertilizer at a 150 kg/ha application rate, 150,000 tons of fertilizer would be employed, or more than eight times the amount in use in the early 1970's.

Also significant from an energy perspective is the reduction in raw product equivalent output that occurs as millet flows from field to final consumer. Thus, the assumed output of the system described in Exhibit 4.7 (376,700 tons of millet and 5,800 tons of seed) is only 83 percent of the combined net production of 455,800 tons, indicating a loss of 73,300 tons of edible product. Most of this loss occurs during storage, particularly where household and village granaries are used.

Energy-Related Problems and Opportunities

An even greater reliance on animal traction and commercially-produced fuels, fertilizers, and pesticides is implicit in the Government of Senegal's millet production objectives for the end of the Fifth Plan period. As output expands, there will need to be a comparable expansion in commer-

cial storage and distribution infrastructure, to which end USAID and others have been assisting ONCAD for several years. USAID is also involved with the European Development Fund and SODEVA in introducing improved cultivation practices, seed varieties, and credit facilities to millet farmers in the Groundnut Basin.

There may be some potential for encouraging energy-efficient production practices or for substituting more desirable energy sources in conjunction with these projects, particularly with respect to fertilizer usage. Other energy-related opportunities would appear to exist in areas of the millet system which are not the targets of large-scale development efforts, including household and village-level processing and storage.

Fertilizer Use

Inducing farmers to purchase and apply chemical fertilizers is one of the main elements of the Government's strategy for increasing millet yields in Senegal. According to Government statistics, there already has been a significant increase in the volume of fertilizers used on millet in recent years (from 4,700 tons in 1965/66 to 35,100 tons in 1975/76), despite lags in growth of demand during the drought period. Annual consumption is projected to exceed 50,000 tons by 1981, subject to the provision of adequate credit and marketing incentives needed for farmers to finance fertilizer use.

The principal fertilizer compound used in millet production (14-7-7) contains proportionately greater amounts of nitrogen than of other nutrients. Nitrogen fertilizer, which is made from imported ammonia, is highly energy-intensive and will undoubtedly become more costly to produce as petroleum prices rise. This prospect of rising fertilizer costs may impede Government efforts to stimulate fertilizer demand unless ways can be found to reduce the quantities of imported chemicals required to maintain desired levels of soil fertility on millet fields.

Storage

It has been variously estimated that as much as 25 percent of the millet stored in traditional granaries is lost to rodents, insects, mildew, fire, theft, and other factors. That there are problems with millet storage in Senegal is evident from the results of a recent rural village survey, in which 40 percent of the respondents said they felt that their storage methods for millet were unacceptable. Even respondents reporting overall satisfaction with their storage facilities said they had problems with rodents and insects.12/

A loss of just 15 percent of annual millet output due to poor granary storage conditions would amount to 69,100 tons in a typical year (Exhibit 4.7). If this loss could be reduced by one-half (about 35,000 tons), Senegal would be relieved of the need to import millet in all but the very worst of years. Households would also have additional millet available as insurance against starvation or as a ready source of cash to finance other purchases.

Processing

Because millet processing is performed in Senegal for the most part by hand, the requisite investment in women-hours is high. The work of threshing, dehulling, and grinding is extremely laborious and may prevent the women who perform these tasks from engaging in more economically and socially productive activities. In addition, if the producing household wishes to sell its millet at favorable prices through legal channels, it must complete the threshing immediately following harvest. This is often difficult to accomplish in that the groundnut harvest, which succeeds the early millet harvest by only a few weeks, competes for the family's labor. As millet yields increase and more product becomes available for sale, threshing requirements will increase commensurately. Continued reliance of manual processing methods could thus effectively limit the amount of millet that legally enters the marketplace in Senegal.

12/ Yaciuk and Yaciuk, op. cit.

C. RICE

Background

Rice is the second most important food crop in Senegal, whether considered from the standpoint of area under cultivation, total production, or total consumption. While rice is a traditional crop in the southern part of the country, growth in demand has come in large part from urban dwellers, who consume mainly imported rice.

Exhibit 4.8 presents data on rice production, domestic consumption, and imports for the years 1973/74 to 1976/77. Average annual rice consumption for this period was about 304 thousand tons in paddy equivalent, 66 percent of which was imported. Rice imports during these years fluctuated between approximately 190,000 and 217,000 tons annually, reflecting the absence of any consistent increase in levels of domestic production.

Exhibit 4.8

Rice Production, Consumption and Imports:
1973/74 through 1976/77
(In tons of paddy equivalent)

	1973/74	1974/75	1975/76	1976/77	Average
Imports	217,300	190,700	200,000	200,000	202,000
Domestic Production	64,300	117,000	115,200	112,000	102,250
Apparent Consumption	281,600	307,700	315,200	312,000	304,250

Source: USAID, Casamance Regional Development Project Paper, July 1978.

Imported rice was first introduced into Senegal by the French colonial government, to provide a staple grain for the urban population and to sustain farmers during soudure. Preference for rice has been well-established in urban areas, and, as previously mentioned, the need to import large quantities of rice to satisfy this preference puts a severe strain on Senegal's balance of payments position. Although a considerable amount of rice is grown by traditional methods in the Casamance and parts of Senegal Oriental, this production has been mainly for autoconsumption and, as will be discussed below, Government agencies have had difficulty in capturing much of the surplus output. While seeking to increase this surplus by improvements in production techniques, the Government has also been investing in irrigated rice projects along the Senegal River in the north, where rice has only recently been introduced.

System Methods, Costs, and Energy Requirements

Production

About 70 percent of the rice produced in Senegal is grown on small farms in the Casamance and parts of Senegal Oriental without the benefit of mechanized equipment or irrigation pumps. The Government has been introducing improved production techniques for rice in these regions, including the use of fertilizer, pesticides and selected seeds; limited land improvements (such as polder construction); and more effective farming practices. Approximately 25 percent (13,000 ha) of Casamance riceland is under project supervision, including 5,700 ha at the large Sedhiou project. SOMIVAC is responsible for most agricultural development in the Casamance region, while SODEFITEX provides technical assistance to upland rice farmers in the Upper Casamance and Senegal Oriental.

The remaining 30 percent of domestic rice production takes place on the irrigated perimeters developed and managed by SAED, the regional agency responsible for agricultural development projects in the Senegal River Val-

ley. SAED currently controls six "perimeters"13/ in the Valley between Bakel and St. Louis. The three closest to St. Louis (Delta, Dagana, and Nianga) comprise a total of nearly 9,000 hectares and employ capital-intensive equipment and production techniques, whereas those further up the Valley (Guede, Matam, and Bakel) are relatively small (768 hectares in all)14/ and more dependent on hand labor. In addition to rice, maize and vegetables (such as tomatoes and peppers) are grown as off-season crops on those perimeters having full water control. Some wheat trials have also been conducted, but with unsatisfactory results. In the analysis which follows, the methods, costs, and energy requirements for rice produced on the large and small irrigated perimeters will be compared with those characteristic of traditional and improved systems of swamp and upland rice production in Senegal.

(1) Methods

SAED is responsible for the development of the irrigated perimeters, which are classified according to the degree of water control which they afford: primary control is achieved by simply diking the river banks to retain river flood waters; secondary control involves constructing dikes and irrigation channels within the flooded basin as well, sometimes with the addition of pumping to maintain water levels; tertiary control denotes full irrigation by pumpage, and requires diking, drainage and leveling the land. Except in the Delta perimeter (the largest of the six perimeters) where only 43 percent of the irrigated land is under full water control, all SAED perimeters employ tertiary control systems of irrigation.

13/ "Perimeter" is an anglicization of the French word perimetre, which in Senegal denotes the area encompassed by a project -- in this case, the irrigated area developed and administered by SAED.

14/ As the Bakel perimeter is still in the planning phase only 561 ha of the total area of the small perimeters are actually under cultivation.

Once the irrigation and drainage infrastructure is in place, contracts are made with groups of individual farmers (groupements de producteurs) to farm the land as a single unit. Each farmer is required to help maintain the irrigation system, to market all surplus produce (about 20 percent of total production) through SAED, and, immediately following the harvest, to pay for agricultural inputs provided to him by SAED out of the money he receives from the sale of his crop. Any remaining debt of the farmer is carried forward to the next growing season.

The infrastructure development and production techniques employed in the large perimeters are highly capital-intensive. Imported heavy machinery, such as bulldozers, combines, tractors, and sprayers, are used to prepare and cultivate the land, and water is pumped from a large central pumping station. Some of the problems that have been associated with this system of rice production include high production costs to the farmers resulting from SAED's use of expensive machines, the abbreviated working life of equipment due to inadequate maintenance, difficulties with training producers to use sophisticated farm machinery and production practices, and inadequate project management on the part of SAED itself. Because of these problems, the use of machinery services on some perimeters has been limited to the most essential tasks: land preparation, seeding, and harvesting.

Although the high costs of developing and pumping water to the land and the need to employ mechanical equipment for at least some production tasks mean that the Government must effectively subsidize rice production in this region, Senegal is still committed to introducing irrigated production in the Fleuve. Irrigated production satisfies three of the Government's sectoral goals: water management; regional development; and food security. Because of the extremely low levels of rainfall in the Senegal River Valley, it is impossible to significantly improve or diversify traditional flood-recession and rainfed cropping. Thus, increased water control is the only means by which farmer risk and uncertainty may be reduced. The Government also wishes to raise incomes in this region, especially since there has for a long time been a large outflow of migrant workers from the

Fleuve to Dakar and France. It is further hoped that output from the large perimeters will decrease food insecurity by assuring domestic supplies of rice, although at present domestically produced rice accounts for only a third of the rice consumed in the country. The use of mechanized services is justified on several counts: the reluctance of the formerly nomadic people living in the Valley to employ their livestock as draft animals; the difficulties of tilling the Valley's hard clay alluvial soils by hand or by animal traction; and the need to replant as soon as possible after harvest if multiple crops are to be grown on the irrigated lands. There is also a limited supply of labor, which would eventually restrict the amount of land which could be intensively cultivated without these mechanized inputs.

The Government's original target was to develop 50,000 hectares of large irrigated perimeters by 1985. Subsequently, it was decided to postpone construction of more large-scale perimeters until the Manantali and Diama dams had been completed and to concentrate instead on creating temporary small perimeters near existing villages in order to avoid having to resettle the villagers more than once.

On the small perimeters, all land clearing and preparation tasks are performed by hand. Diesel pumps are used to provide irrigation water over an area averaging about 20 hectares per pump.15/ SAED supplies the irrigation pump, gasoline and lubrication oils, makes commercial inputs available, and offers technical assistance. Farmers collectively dig the irrigation and drainage canals, level the land, build low dikes as necessary, remove tree stumps, and otherwise prepare their fields with the aid of simple tools. Commercial inputs must be paid for when purchased with cash

---

15/ An experimental solar pumping station is being installed at Bakel in conjunction with USAID's Bakel Crop Production Project. This 30 kw system, built by SOFRETES (a French firm) and Thermo-Electron (a U.S. company) with support from SINAES (a Senegalese organization specializing in renewable energy applications), is designed to supply water to an area of 200 hectares. The costs of the project are being shared by FAC and USAID.

which has been set aside from the previous year's crop receipts. For this reason, farmers growing rice on small irrigated perimeters are seldom plunged into debt, unlike the farmers on the large perimeters who can delay payment on input purchases until after they have sold their crops.

Outside the Fleuve region, most rice is Senegal is grown by traditional swamp methods with few commercial inputs. 61,700 ha were under traditional swamp cultivation in 1976, representing about 55 percent of the total area in Senegal devoted to rice production. The rice is cultivated in fields or brackish mangrove swamps surrounded by handmade earthen dikes to retain the water. The plants are transplanted from nursery seedbeds, and soil fertility is maintained with the application of crop and household wastes. The soil is prepared with hand tools and harvesting is done with a machete. The harvested paddy is tied into sheaves and transported from the fields by hand, by horse cart or sometimes by small boat (piroque). Yields of rice cultivated in the salt-water mangrove swamps tend to be lower than those for rice cultivated in fresh water, in spite of the fact that farmers usually plant a long-cycle, salt-tolerant variety.

In the upland regions of the Casamance and Senegal Oriental, approximately 13,500 ha are planted in rainfed rice. Animal traction has been introduced, and is used for land preparation, seeding, weeding and transport of the paddy. Chemical fertilizers, pesticides and improved seeds are also used.

Improved inputs have been introduced in the Casamance by Government extension programs, and at present selected seeds, chemical fertilizers, pesticides and improved farming practices are being tried on 4,200 ha of swamp riceland in this region. An additional 500 ha of Casamance swamp riceland have been altered to provide partial water control, mainly through the construction of drainage ditches and contour field bunds. Although partial water control, when used in conjunction with improved inputs, produces a significant increase in the average yield (from 2.25 tons of paddy

per ha under improved swamp cultivation with no water control to 3.6 tons with partial control), it is highly labor-intensive and also requires a certain amount of coordination on the part of the individual farmers. Thus, its use has been limited mainly to areas where the land development agencies have been involved.

A major obstacle to the increased use of improved inputs and cultivation methods for swamp land rice is cost. In the Middle Casamance, women are responsible for growing rice, and their access to credit is limited. In those areas where most rice is autoconsumed, farmers may be unable to finance commercial inputs even when credit is available.

SOMIVAC in the Casamance and SODEFITEX in Senegal Oriental are responsible for promoting the use of improved seed varieties, fertilizers and insecticides, and animal traction among rice farmers. Due to time, personnel, and resource constraints, these agencies had been able to introduce improved techniques on only about 18,000 ha of rice land by 1976. A semi-public corporation, SODAGRI, is currently studying the feasibility of developing a large mechanized irrigated rice scheme in the Upper Casamance; however, a number of problems still remain to be worked out before production can commence.

Although the bulk of Senegal's rice is produced in the Casamance, the Government has chosen to focus most of its efforts to obtain and market domestic rice as a substitute for imports on the Fleuve irrigated perimeters, where it has the authority to capture producer surpluses. There are several reasons for this failure to look to the Casamance to feed the nation's urban areas -- a role to which it is well-suited by virtue of its high rainfall levels and fertile soils. One major problem relates to the isolation of the Casamance from the rest of the country and its poor transportation infrastructure. Trucks travelling north to Dakar must sometimes wait up to three days to use the Gambia River ferry at Banjul, or else take a more circuitous route to cross up-river at Mansa Konko. During the rainy season (which in the Casamance may last as long as six months), many

of the region's earthen roads are impassable. Also, feeder roads for the evacuation of produce are limited in number, and oriented largely toward the groundnut-producing areas. A second major problem is tied to the reluctance of members of the Diola tribe (one of the major rice-producing groups in the Casamance) to market their rice, as they prefer instead to store any surplus and meet their cash needs by marketing groundnuts. Moreover, the preponderance of traditional production techniques in the Casamance means that yields are generally low and that most rice is needed for autoconsumption. Thus, present rice surpluses are not nearly sizable enough to have much effect on import levels, even if marketing constraints could be reduced.

Exhibit 4.9 shows representative farm budgets for rice production according to the seven basic methods of cultivation used in Senegal. Not included (except partially and indirectly as part of the charge for water) are SAED's initial costs of developing the perimeters in the Fleuve. For the large perimeters, land development costs run between $5,000 and $9,000 per hectare, whereas for the small perimeters these costs are considerably lower (running about $1,300 on the average), as villagers contribute their labor. Land preparation strategies, devised each year by personnel at SAED's central office in St. Louis, are basically standardized for application on all of the large perimeters. For the crop year 1975/76, the cost of deep plowing, off-setting, seeding, and fertilizing the land averaged about $90 per hectare. In addition, SAED provided farmers with from 50 to 200 kg/ha of diammonium phosphate (16-48-0) and from 100 to 200 kg/ha of urea (46-0-0) fertilizers (depending on the perimeter), along with seeds, irrigation water, and threshing services. Input costs ranged between $300 and $400 per ha exclusive of labor. SAED also makes insecticides and mechanical spraying services available as needed, but prefers to minimize their use in order to keep production costs down.

Yields on the large perimeters vary with the perimeter's location and the degree of water control it affords. On the Delta perimeter, the average yield is 2,500 kg of paddy per ha; however, yields are 500-1,000 kg per

Exhibit 4.9

Senegal: Rice System
Representative Farm Budgets

Budget \ Technique	Perimeters: Large: 1 crop 1/	Perimeters: Large: 2 crops 2/	Perimeters: Small 3/	Swamp: Traditional 4/	Swamp: Improved 5/	Swamp: Partial Water Control 6/	Improved Rainfed 7/
I. Characteristics							
Area (ha)	7,483	1,156	561	61,700	4,200	500	13,500
Water control	partial and full control	full control	full control	partially controlled flooding	limited bunding	controlled flooding & drainage	none
Crops per year	1	2: rice, tomatoes	2: rice, tomatoes	1 1	1 1	1 1	1 1
Wage rate (daily, in CFA francs) 8/	250	250	250	300	300	300	300
II. Inputs (in US $/ha) 9/							
Fertilizers & Insecticides	62.93	78.61	61.09	--	22.61	30.43	19.13
Seeds	35.00	36.52	9.85	18.26	11.74	11.74	23.48
Mechanized Services	113.77	110.87	131.95 10/	--	--	--	.14
Animal Services & Equipment	3.93	3.42	1.83	--	21.06	33.69	18.90
Irrigation Water	108.70	108.70	-- 10/	--	--	--	--
Small Tools	15.61	20.56	10.33	2.61	2.61	3.83	3.83
Irrigation Works	--	--	6.95	4.36	3.10	4.36	.14
Labor	100.00	146.74	293.48	271.30	298.70	346.96	144.78
Working Capital	3.59	5.14	19.62	15.39	15.52	17.93	8.41
TOTAL COST	443.53	510.56	535.10	311.92	375.34	448.94	218.81

(continued)

Exhibit 4.9
Senegal Rice System:
Representative Farm Budgets (continued)

Technique / Budget	Perimeters			Swamp			Improved Rainfed
	Large		Small	Traditional	Improved	Partial Water Control	
	1 crop	2 crops					
III. Output (in US $/ha, except as noted)							
Yield (kg/ha)	2,500	3,800	4,750	1,080	2,250	3,600	2,070
Gross Income 12/	451.09	685.65	857.07	194.40	405.98	649.57	373.50
Net Revenue	7.56	175.09	321.97	-117.52	30.64	200.63	154.69
Net Revenue, Labor Costs Excluded	107.56	321.83	615.45	153.78	329.34	547.59	299.47

1/ Delta perimeter.
2/ Niange and Dagana perimeters.
3/ Matam and Guede perimeters.
4/ Casamance region.
5/ Casamance region. Improved indicates use of selected seeds, fertilizers and insecticides.
6/ Casamance region, in government project areas.
7/ Casamance and Senegal Oriental regions.
8/ At a rate of exchange of 1 US$ to 230 CFA francs, the wage rates would be $1.09 and $1.30 per day.
9/ In US$ at an exchange rate of 1 US$ to 230 CFA francs. Amounts are per ha.
10/ Irrigation costs for the small perimeters are reflected in costs for mechanized services (in this case, the pump). On the large perimeters, SAED makes a flat charge for irrigation water, which only partially reflects the costs of the irrigation works, the balance of which are subsidized.
11/ Calculated on the basis of 6 months for inputs needed at the beginning of the cropping season (seeds, fertilizer) and 3 months for inputs used throughout the season, at an annual rate of interest of 8 percent.
12/ At the official paddy price of $0.13043 per kilo (41.5 CFA francs).

Source: Calculations are from the Stanford University Food Research Institute and WARDA, "The Political Economy of Rice in West Africa." Farm budgets are based on farmers' actual costs in 1975/76, and include taxes and subsidies.

ha on those areas with only primary water control, while tertiary water control areas on the Delta achieve yields of 2,000 to 3,000 kg of paddy per ha. On the Nianga perimeter, which is further up-river than the Delta and therefore less subject to the effect of salt water incursion,16/ yields can reach 3,800 kg per ha. These differences in productivity affect net earnings for the farmers: for example, in one recent year, Delta farmers realized an average net revenue (labor costs excluded) of $108, while Nianga farmers realized one of $322, despite the fact that input costs (exclusive of labor) for farmers on both perimeters were roughly equal and producer prices were fixed at $130/ton. Evidently, complete water control is needed on the large perimeters in order to produce sufficiently high yields to compensate for the costs of irrigation water and mechanized services.

Expenses associated with rice production in the small perimeters typically include the cost of seeds, fertilizers, fuel and lubricants, and depreciation on hand tools and the irrigation pump. SAED provides the initial pump (which is assumed to enjoy only a five-year working life) and pays a mechanic to service it, but farmers must set aside funds to replace it when it wears out, and to pay for spare parts.

Exclusive of labor and SAED's pump maintenance costs, costs per hectare on the small perimeters average about $242, output averages 4.5 to 5 tons, and net revenue averages $615. However, since each farmer cultivates only one-fifth to one-quarter of a hectare, net returns per farmer would run between $125 and $150 in a typical year.

Traditional swamp rice production techniques give lower yields (about 1,080 kg paddy per ha). Costs are also lower, the major input being labor,

---

16/ In years of low rainfall, salt water is drawn up the Senegal River, increasing the salinity of soils. Construction of the Diama dam will control this problem and its detrimental effect on the productivity of rice lands, especially on the Delta perimeter which is situated close to the river mouth. The damage due to salt water incursion can be especially severe (reducing yields to zero in some cases) on those parts of the Delta perimeter that lack full water control.

and net revenue exclusive of labor is about $154 on a per hectare basis. Yield and net revenue rise substantially when improved techniques are introduced, averaging 2,250 kg and $329 respectively per hectare. Partial water control further increases yields (3,600 kg paddy per ha) and revenue ($548 net of labor costs). For rainfed rice production, yields average 2,070 kg/ha, and net revenue (exclusive of labor costs) $299.

When the opportunity costs of labor are included in the revenue calculations,17/ the cultivation of swamp rice by the traditional method produces a negative income, indicating that the farmer is not being adequately compensated for his or her labor in relation to the prevailing wage rate. Thus, while net revenue exclusive of labor costs for traditional swamp cultivation is greater than that for single cropping on the large irrigated perimeters, the substantially higher inputs of labor required by the traditional method negate the apparent profitability.

(3) Energy Requirements

The amounts and types of energy utilized in rice production are a function of the degree to which mechanized equipment and chemical inputs are employed. On the large perimeters, it is estimated that the tractors used for plowing, offsetting, seeding, and fertilization of the rice fields consume between 66.2 and 70.5 liters of fuel and lubricants for every hectare of land prepared (Exhibit 4.10). Estimated quantities of other commercial energy inputs used under the various systems of cultivation prevailing in Senegal, on a per hectare basis, are shown in Exhibit 4.11.

17/ Labor is valued at the prevailing wage rate according to region, which reflects the opportunity cost of using labor in rice production activities in Senegal, where supplies of this input are limited. Labor constraints may also mean that at some point the Government will have to introduce animal traction or mechanization on a larger scale in order to achieve desired yields, and that the future of such labor-intensive methods as those employed on the small perimeters and in areas where swamp rice is grown under partial water control may be limited.

Exhibit 4.10

Senegal: Rice System
Fuel Requirements for Land Preparation Services
Provided by SAED on Large Irrigated Perimeters

Cultural Task	HP	Hours/Ha	Fuel Use (Liters/ha)
Deep Plowing	105	1 1/ (1.33)	12.6 (16.9)
Offsetting	65	1.5	11.7
Seeding	65	2	15.6
Fertilizing	65	3	23.4
Subtotal	-	7.5	63.3 (67.6)
Oil			2.9
TOTAL			66.2 a/ (70.5)

1/ Deep plowing takes four hours per ha, but is only performed every four years on the Nianga and Dagana perimeters, and once every three years on the Delta. Total fuel requirements for the Delta perimeter would thus be slightly higher, as indicated by the figures in parentheses.

Source: Based on assumed rate of consumption of 12 liters fuel per HP per hour (from Memento de L'Agronome [République Française, Ministère de la Coopération, Paris, 1974], which is the estimate usually used by SAED), and 4.5 liters oil for every 100 liters fuel. These are liberal estimates based on poor operating conditions in Africa. HP and task hours figures are from SAED.

Exhibit 4.11

Senegal: Rice System
Commercial Energy Inputs and Average Yields Per Hectare, by Production Method

Technique	Fuel Oil (liters)			Fertilizers (kgs.)			Pesticides (kg)3/	Average Yield (tons)
	Land Preparation2/	Irrigation	Total	Compound	Urea	Total		
Large Perimeters, 1 crop1/	70.5	244.6	315.1	150	100	250	8.2	2.5
Large Perimeters 2 crops	66.2	221	287.2	250	100	350	9.8	3.8
Small Perimeters	-	204.6	204.6	200	200	400	1.0	4.75
Traditional Swamp	-	-	-	-	-	-	-	1.08
Improved Swamp	-	-	-	200	100	300	1.0	2.25
Improved Swamp, Partial Water Control	-	-	-	250	150	400	1.0	3.6
Improved Rainfed	-	-	-	150	100	250	1.0	2.07

1/ Only 43 percent of the Delta perimeter is under full water control; the remaining lands are currently under primary (dikes and bunds) and secondary (dikes, bunds, and limited pumping) forms of control.

2/ From Exhibit 4.10.

3/ Both liquid and solid pesticides are used on SAED's large perimeters. However, for purposes of this analysis, liquid pesticide data are expressed in kg equivalents, based on an assumed average conversion factor of 1 liter = 0.9612 kg (1,040.4 liters = 1 metric ton).

Source: Stanford University Food Research Institute/WARDA, op. cit., and SAED.

The estimates in Exhibit 4.11 have been used to calculate annual fuel and chemical usage on an aggregate basis for each production system. The results are presented in Exhibit 4.12, where they are compared with data on average production. Traditional methods of rice production, which employ no fuel or chemicals, are by far the least productive, accounting for only 53 percent of the total production but 71 percent of the area cultivated in rice. But high yields and returns can be obtained where intermediate levels of technology are combined with large inputs of labor, as with the small perimeters and improved swamp/partial water control techniques. As mentioned previously, however, labor-intensive production methods cannot be depended upon to provide the basis for most rice development in Senegal due to constraints on the availability of labor. If Government objectives are to be realized, investment in other forms of production (some of which involve significantly higher inputs of energy) will also have to be made.

Threshing

In Senegal, rice is traditionally threshed by hand. However, small portable mechanized threshers have been introduced into some communities, and stationary or fixed threshing machinery is available to handle the production of the large perimeters in the Senegal River Valley.

The traditional method of threshing involves the use of a mortar and pestle or, where production is substantial, of specially-constructed thesh-ing floors (gergals) where the rice heads are beaten against flattened gas cans or other suitable objects and the grain collected in cloth or plastic sacks. In the absence of threshing floors, the heads may be taken to the edge of the field and pounded by foot. In rare cases, pedal-operated threshers may be used to separate the paddy, but these have been found to be no faster than hand threshing. Some sources estimate that from two to five percent of the paddy is lost when hand threshing methods are used, whether from pounding it into the ground, discarding it with the rice straw, or other reasons.

Exhibit 4.12

Senegal: Rice System
Commercial Energy Inputs, by Production Method

Production Method	Area Cultivated (1976)		Commercial Energy Inputs: Fuel/Oil		Fertilizers		Pesticides		Production	
	(ha)	(%)	(kl)	(%)	(tons)	(%)	(tons)	(%)	(tons)	(%)
Large Perimeters, 1 Crop, of which:	7,483	8.7	1,838.9	80.0	1,870.7	29.1	61.4	69.4	18,700	15.0
Full Water Control	(3,240)	(3.8)	(1,020.8)	(44.4)	(809.9)	(12.6)	(26.6)	(30.0)		
Partial Water Control	(4,243)	(4.9)	(818.1)	(35.6)	(1,060.8)	(16.5)	(34.8)	(39.4)		
Large Perimeters, 2 crops	1,156	1.3	331.7	15.0	404.2	6.3	11.3	12.8	4,400	3.5
Small Perimeters	561	0.6	114.9	5.0	224.6	3.5	0.6	0.7	2,700	2.1
Traditional Swamp	61,700	71.7	-	-	-	-	-	-	66,600	53.1
Improved Swamp	1,200	1.4	-	-	360.0	5.6	1.2	1.4	2,700	2.1
Improved Swamp, Partial Water Control	500	0.6	-	-	200.0	3.1	0.5	0.5	1,800	0.7
Improved Rainfed	13,500	15.7	-	-	3,375.0	52.5	13.5	15.2	27,900	22.5
TOTAL	86,099	100.0	2,285.0	100.0	6,434.5	100.0	88.5	100.0	124,800	100.0

1/ Includes lands under primary (no pumping) and secondary (some pumping) control. It is assumed for purposes of analysis that 50 percent of the total area under partial water control falls into each category.

Source: Exhibit 4.11 and Stanford/WARDA project data. Production figures have been rounded to nearest 100 tons.

Where portable threshers exist, they are usually owned and operated by small-scale entrepreneurs who charge about $.04 per kg of threshed paddy. Most of these machines, which are made in Senegal by SISCOMA, have 20 h.p. diesel engines and can handle from 200 to 250 kg of paddy an hour. Their hourly rate of fuel consumption is approximately five liters.

The fixed threshers operated by SAED on the large perimeters can thresh a ton of paddy in about 1.25 hours with a fuel expenditure of about five liters. These machines, which cost around $1,500 per unit, are equipped with a small Bernard motor and operate for up to eight hours a day depending on the amount of paddy to be threshed.

Exhibit 4.13 shows estimates of the total amount of fuel required to thresh the paddy produced in Senegal in a typical year. It is assumed that the entire production of SAED's large perimeters is threshed by fixed machines which consume five liters of fuel for every ton of paddy handled, and that ten percent of the output of each of the other systems is threshed by small portable machines that consume 25 liters of fuel per ton. The balance of 91,500 tons of paddy, or 73 percent of the total production, is threshed by hand and requires no commercial energy inputs. As the data indicate, the fixed machines are far more energy-efficient than the portable ones in spite of their higher investment costs.

Storage

There are two major storage systems for rice in Senegal: one at the national level, operated by ONCAD and its approved wholesalers, for imported and domestic rice which passes through the official marketing system, and the other at the village level. Both systems suffer substantial losses due to grain predation, estimated to be on the order of 10 and 15 percent respectively. ONCAD fumigates its storage facilities (using five liters of insecticide per 1,000 m2 initially plus 100 grams per ton of product every three weeks); otherwise, little or no commercial energy inputs are used in either system of storage.

Exhibit 4.13

Senegal: Rice System

Estimated Fuel Requirements for Threshing
By Threshing Method

Threshing Method	Quantity Threshed (tons)	Fuel/Ton (liters)	Total Fuel (liters)
Fixed Thresher	23,100	.5	115,500
Portable Thresher	10,200	25	255,000
Hand	91,500	-	-
Total	124,800	-	370,500

Source: Checchi and Company estimates.

In traditional storage systems, rice is usually stored in sheaves or trusses in granaries which are vulnerable to insects, rodents, mildew and theft. In the Middle Casamance, the Diola store threshed rice in a granary above the kitchen hut using the smoke from the cooking fires to help prevent insect infestation -- a practice which can result in the loss of entire grain reserves due to their ignition by wayward cooking fires.

Milling

At present there are four large industrial rice mills in Senegal. SAED operates two mills in the Fleuve, at Ross-Bethio and Richard Toll. The Ross-Bethio mill has an annual capacity of 25,000 tons paddy and the

Richard Toll mill has a capacity of 40,000 tons per year. The other two mills are located in the Casamance at Sefa, where a private company runs a mill for ONCAD, and in Senegal Oriental at Kedougou. Each has a theoretical capacity of 10,000 tons paddy per year. There is also one private mill in Saint Louis which is not permitted to operate because of ONCAD's and SAED's monopoly on rice processing.

The Ross-Bethio and Kedougou mills are the most modern, having been built in 1971 and 1975, respectively. The other two mills were built in the 1950's, although the Richard Toll mill has recently been overhauled.

Some of the equipment at the mills is obsolete,18/ and the proportion of brokens is high, ranging from 45 percent at the southern mills to 80 percent in the Fleuve. In the past, the Senegalese consumer has shown a preference for broken rice, which may reflect a lack of familiarity with the whole-grain product as both hand-pounded and imported rice usually contain a high proportion of broken grains (80 percent in the case of imports). It may also be due to the fact that the small percentage of whole-grain rice that is imported into Senegal (about ten percent of total imports) commands a higher price and has not been subject to subsidy by the Government.

As a rule, about 40 percent of the rice that is grown on SAED's large perimeters is reserved for the use of the farmers and their families; another 40 percent is used as payment by the farmers to SAED for commercial inputs, water, and mechanical services; and the rest is sold for cash. In 1975/76, SAED milled 6,000 tons of paddy and retained some stocks for seed, and the industrial mills in Casamance and Senegal Oriental handled 4,000 tons of paddy. Thus, while the mills have a combined annual processing capacity of 85,000 tons, they typically process only a fraction of that amount (12 percent in 1975/76).

18/ Studies aimed at eventually replacing the old turbo-alternator motors used by the mills with simpler and more efficient dual alternator gasoline motors are currently underway.

The mills at Kedougou and Ross-Bethio consume fuel oil and lubricants at the rates of 32 liters and 35 liters, respectively, per ton of paddy milled. On the basis of these consumption figures, and assuming that the rate of fuel consumption at Sefa is comparable to that at Kedougou,19/ total fuel requirements would amount to 338,000 liters in a typical year in which 10,000 tons of paddy are processed at Senegal's large industrial mills (Exhibit 4.14). Losses in industrial milling (exclusive of husks and bran) are believed to run around one percent of paddy handled, compared with losses of up to five percent when hand methods are used.

Exhibit 4.14

Senegal: Rice System

Estimated Fuel Requirements for Milling
By Milling Method

Milling Method		Quantity Milled (tons)	Fuel/Ton (liters)	Total Fuel (liters)
Industrial:	Ross-Bethio	6,000	35	210,000
	Other Mills	4,000	32	128,000
Hullers		8,000	10	80,000
Hand		83,300	-	-
TOTAL	TOTAL	101,300		418,000

1/ No data are available for the Richard-Toll mill, which only recently re-opened after having been closed for several years.

Source: Checchi and Company estimates.

19/ No data are available for the Richard Toll mill, which only recently reopened after having been closed for several years.

There are also between 30 and 40 small diesel-powered hulling machines in Senegal,20/ with an average capacity in paddy of about 250 kg per hour or 500 tons per year. Milling outturn ranges from 50 to 70 percent (compared with 64-66 percent for the industrial mills), with 40 percent brokens. Operators charge $0.04 per kg of paddy handled, which approaches the charge for hand pounding in some areas. Average fuel consumption is ten liters per ton. Assuming that these machines operate at about half their annual capacity and handle 8,000 tons of paddy per year, they would require about 80,000 liters of fuel and oil. The remainder of the rice produced in Senegal in a representative year (some 83,300 tons after allowance for losses in threshing and storage) is hand-pounded by methods which involve no commercial energy inputs.

Transportation

Less than 30 percent of the rice produced in Senegal in a typical year is transported by truck or other motorized means of transportation. For purposes of this analysis, it is asssumed that trucks are used to carry rice to and from the large commercial mills, and that rice that is not handled by the mills is transported in animal-drawn carts, on the backs of men and women, or by sail or paddle boat.

Exhibit 4.15 is an estimate of the amount of fuel utilized in transporting paddy fr farm to mill, and milled rice (about 65 percent the weight of paddy) from mill to point of sale. The fuel per ton/km factors are derived from a transportation study prepared for the Government of Sen-

---

20/ These privately-owned hullers are illegal in the Fleuve and are discouraged elsewhere by ONCAD and SAED, which want to retain their monopoly on rice processing and distribution. Nevertheless, it is estimated that there are 13 such machines in operation in the Fleuve, 15 in the Casamance, and another five or ten in Sine Saloum.

Exhibit 4.15

Senegal: Rice System

Estimated Fuel Requirements for Transportation
By Transport Method

Method	Quantity Transported (tons)	Average Distance (km)	Fuel Per Ton/km (liters)	Total Fuel (liters) 1/
Truck To/From Ross Bethio				
Farm to Mill	6,000	75	.096	43,200
Mill to Point of Sale	3,900	280	.072	78,600
Subtotal	-	-	-	121,800
Truck To/From Other Mills				
Farm to Mill	4,000	50	.096	19,200
Mill to Point of Sale	2,600	75	.072	14,000
Subtotal	-	-	-	33,200
Non-Motorized	-			-
Total				155,000

1/ Rounded to nearest 100 liters.

Source: Checchi and Company estimates.

egal in 1974.21/ It is assumed that the roads leading from the mills to urban areas where most of the rice is sold are in better condition than those leading from the farms to the mills, and therefore a lower fuel per ton/km factor applies. No allowance is made for the fuel used in transport of imported rice, although a large proportion of this is consumed at the port of entry of Dakar and thus places little burden on the domestic transportation system.

Most transportation services are provided by ONCAD and SAED. Although ONCAD has the monopoly on rice distribution in Senegal, SAED transports

---

21/ Louis Berger/Orgatec, Senegal Highway Maintenance Study, Volume IV-B, January 1972.

rice from the Fleuve perimeters to the Ross-Bethio mill in its own fleet of trucks. Once the rice has been milled, it is taken to ONCAD's warehouses in St. Louis and then distributed. ONCAD transports rice to the mills in Casamance and Senegal Oriental. In spite of the ONCAD monopoly, some rice is marketed illegally, which tends to increase fuel requirements and costs since trucks carrying rice to illegal markets must take circuitous routes, involving travel over back roads and tracks, in order to evade government inspectors. Little information is available on how much rice is moved in this manner or on the distances involved. Hence, it has been assumed that all rice not transported by ONCAD or SAED is moved by non-motorized means of transportation (animal-drawn carts, pirogues. etc.).

Energy Input-Product Output Summary

The product flow chart in Exhibit 4.16 depicts the various methods by which rice is produced, threshed, stored, milled, and transported in Senegal, along with estimates of tonnage handled and losses incurred in a representative year. Commercial fuel and chemical input requirements are summarized in the worksheets which follow the exhibit. The aggregated data in Table 4.16A illustrates several important points about the use of energy in the rice system. First, out of a total of 3.2 million liters of gasoline, diesel, and other petroleum-based fuels consumed annually within the system, nearly 2.2 million tons, or 67 percent, are used to power the tractors and run the irrigation pumps on SAED's large perimeters in the Senegal River Valley. Second, out of an estimated net production of 124,800 tons of rice (in paddy equivalent) harvested in Senegal in a typical year, only 100,200 tons, or 80 percent, ultimately becomes available for consumption in the form of food or seed. The other 20 percent is presumed lost during threshing, storage, or processing, with the heaviest losses occurring when traditional hand methods of performing these tasks are used.

The amount of fuel required to produce and process a ton of rice (paddy) in Senegal can range from virtually nothing when hand labor is the principal input to close to 150 liters when mechanized equipment is used to

Exhibit 4.16

RICE SYSTEM: PRODUCT FLOW

(in '000 tons paddy equivalent)

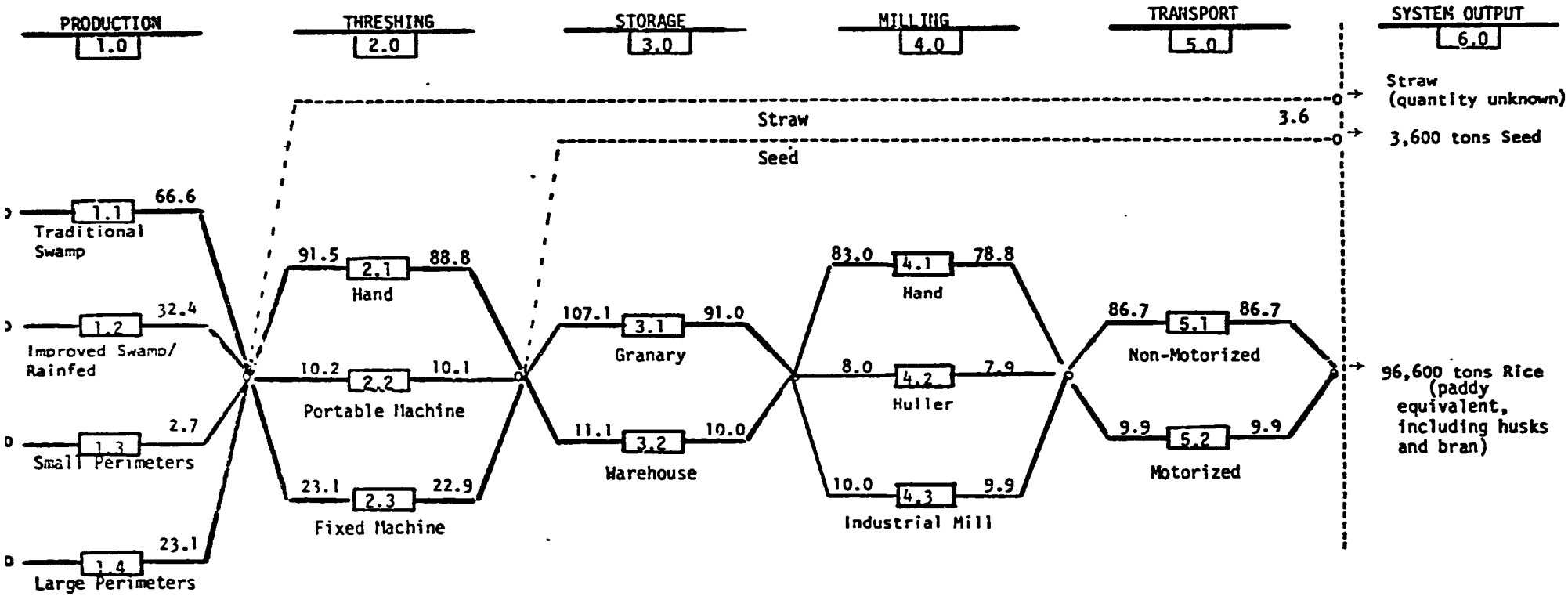

Table 4.16A

Senegal: Rice System

Energy Inputs, Product Losses, and Net Product Output
By System Activity and Method

Ref.	Activity (method)	Edible Product 1/ Net Output (tons)	Edible Product 1/ Losses (tons)	Energy Inputs Liquid Fuels (kl)	Energy Inputs Fertilizer (tons)	Energy Inputs Other Chemicals 2/ (tons)
1.0	PRODUCTION					
	1.1 Traditional Swamp	66,600	-	-	-	-
	1.2 Improved Swamp and Rainfed (purchased seeds, fertilizers)	32,400	-	-	3,935.0	15.2
	1.3 Small Perimeters (full water control, labor intensive production)	2,700	-	114.9	224.6	0.6
	1.4 Large Perimeters (partial or full water control, mechanized production)	23,100	-	2,120.6	2,274.9	72.7
2.0	THRESHING					
	2.1 Hand (mortar and pestle, gas cans, etc.)	88,800	2,700	-	-	-
	2.2 Portable Machine (diesel thresher)	10,100	100	255.0	-	-
	2.3 Fixed Machine (diesel thresher)	22,900	200	115.5	-	-
3.0	STORAGE					
	3.1 Granary	91,000	16,100	-	-	-
	3.2 Warehouse	10,000	1,100	*	-	-
4.0	MILLING					
	4.1 Hand (mortar and pestle)	78,800	4,200	-	-	-
	4.2 Deisel Huller	7,900	100	80.0	-	-
	4.3 Industrial Mill	9,900	100	338.0	-	-
5.0	TRANSPORT					
	5.1 Non-Motorized (hand, cart or boat)	36,700	-	-	-	-
	5.2 Motorized (gasoline pick-up)	9,900	-	155.0	-	-
	TOTAL	96,600	124,600	3,229.0	6,434.5	88.5

* = negligible
1/ = In paddy equivalents
2/ = Insecticides and fungicides.

Table 4.16B

Senegal: Rice System

Energy Inputs and Product Losses Per Ton of Net Product Output
By System Activity and Method

Ref.	Activity (method)	Edible Product 1/ Net Output (tons)	Edible Product 1/ Losses (tons)	Energy Inputs Liquid Fuels (liters)	Energy Inputs Fertilizer (kg)	Energy Inputs Other Chemicals 2/ (kg)
1.0	PRODUCTION	1	-	-	-	-
	1.1 Traditional Swamp	1	-	-	-	-
	1.2 Improved Swamp and Rainfed (purchased seeds, fertilizers)	1	-	-	121.5	0.5
	1.3 Small Perimeters (full water control, labor intensive production)	1	-	42.6	83.2	0.2
	1.4 Large Perimeters (partial or full water control, mechanized production)	1	-	94.0	98.5	3.1
2.0	THRESHING					
	2.1 Hand (mortar and pestle, gas cans, etc.)	1	0.030	-	-	-
	2.2 Portable Machine (diesel thresher)	1	0.010	25.3	-	-
	2.3 Fixed Machine (diesel thresher)	1	0.010	5.0	-	-
3.0	STORAGE					
	3.1 Granary	1	0.176	-	-	-
	3.2 Warehouse	1	0.111	-	-	-
4.0	MILLING					
	4.1 Hand (mortar and pestle)	1	0.053	-	-	-
	4.2 Diesel Huller	1	0.010	10.1	-	-
	4.3 Industrial Mill	1	0.010	34.1	-	-
5.0	TRANSPORT					
	5.1 Non-Motorized (hand, cart or boat)	1	-	-	-	-
	5.2 Motorized (gasoline pick-up)	1	-	15.6	-	-

1/ In paddy equivalents.
2/ Insecticides and fungicides.

provide irrigation water and perform other non-farm tasks and then to thresh, mill, and transport the harvested grain (see Table 4.16B). This does not necessarily argue in favor of a return to traditional production and processing techniques, as these often make inefficient use of available land and labor resources. It does, on the other hand, suggest that the Government of Senegal's long-range plans to increase rice production by developing additional large-scale irrigated perimeters may be costly from an energy perspective.

Energy-Related Problems and Opportunities

Senegal's current Development Plan calls for an investment of $117.8 million in irrigated food and cash crop production projects over the period 1977 through 1981. Much of the investment is intended to make reliable sources of fresh water available for rice cultivation in the Senegal River Valley and the Casamance. In all, the Government expects to have 125,000 hectares planted in rice by 1981, producing 300,000 tons of product annually for domestic consumption; however, some analysts who have studied the situation believe this timetable to be overly ambitious.22/

Little information is available concerning the levels of mechanization envisioned for these projects, although it is understood that some international lending agencies have expressed a reluctance to support further development of highly mechanized production systems such as those prevailing on the large Nianga, Delta, and Dagana perimeters. It is also noteworthy that SAED has apparently abandoned the use of mechanized equipment for some farm tasks in order to reduce production costs on these perimeters.

22/ See, for example, Center for Research on Economic Development, Marketing, Price Policy and Storage of Food Grains in the Sahel, University of Michigan, Ann Arbor, August 1977, and the Stanford/WARDA report on "The Political Economy of Rice in West Africa," op. cit.

Even if there should be a shift in favor of more labor-intensive soil preparation and cultivation practices on newly-developed rice lands, increasing amounts of energy will still be needed for pumping irrigation water. There may also be a need for additional energy expenditures to reduce post-harvest losses incurred during processing and storage.

Pumping

Between 200 and 250 liters of fuel are required to irrigate one hectare of rice land in Senegal throughout the growing season, depending on the type of irrigation system employed (see Exhibit 4.11). Except for an experimental solar pump being installed at Bakel, all irrigation pumps in use in the Senegal River Valley are powered by diesel fuel. With close to 10,000 hectares now under irrigated rice production, fuel requirements for pumping amount to more than two million liters per year.

This level of fuel consumption, already high by comparison with total system fuel requirements, is projected to increase by as much as 500 percent as additional lands are brought under irrigated production in the River Valley. Perhaps more significant, however, is the effect that rising fuel prices are likely to have on production costs and thus on the ability of domestically-grown rice to compete with imports.23/ Since a large part of its plan for achieving self-sufficiency in food grains rests on the success of these irrigation projects, the Government of Senegal has given high

---

23/ Even at fuel prices prevailing in the mid-1970s, the cost of irrigation water supplied to rice farmers on the large and small perimeters represented a sizable proportion of these farmers' total annual input costs (see Exhibit 4.9). Moreover, in order to induce farmers to participate in intensification programs for rice production, the Government has fixed the farm-gate price for domestic rice at a level where, after allowance is made for milling and distribution costs, it exceeds the wholesale price for imported rice. This, in effect, constitutes a form of subsidy of domestic rice production which is likely to continue unless significant increases in productivity succeed in lowering unit production costs or unless there is a substantial rise in world market prices for rice.

research priority to developing alternative technologies for pumping water that are not dependent on imported fuels.

Storage

Problems with rice storage in Senegal are similar to those for millet, sorghum, and other grains. Pesticides and fungicides are rarely used at the farm or village level, and infestations by rodents and insects, along with mildew, premature germination, fire, and theft account for losses of up to 15 percent of the harvested crop. Even ONCAD, which reportedly sprays its storage warehouses with chemicals once every three weeks, experiences losses of grain on the order of one ton for every ten tons stored in its facilities.

A 50 percent reduction in storage losses would make some 8,600 more tons of rice available for domestic consumption in a typical year. Any expenditure of energy required to achieve this objective would have to be weighed against the expense of energy terms of producing the equivalent amount of additional rice which, in the case of the large perimeters, may run as high as 94 liters of fuel and about 100 kgs of chemical inputs per ton.

Processing

Most rice in Senegal is hand-pounded. Manual processing methods are both time consuming (it takes an average of two and one half days for a woman to pound a 35 kg sack of rice), and result in a higher percentage of losses than when mechanized equipment is used. Although small diesel-powered hullers exist in some rice-producing areas, their use is not widespread.

One factor that may discourage the dissemination of mechanized processing equipment at the village level is that rice not retained for seed or household consumption is supposed to be handled through SAED and ONCAD

which, in turn, arrange for commercial milling services. Producers often circumvent this official marketing network to sell their surplus output locally, and ONCAD does not actively discourage this activity because it incurs a loss on every ton of rice it handles. While the Government is reluctant to promote small scale industrial processing in the rural areas, as the surplus rice then tends to enter the parallel marketing circuit, adequate price policies, an improved marketing system, and other incentives could invite farmers to sell their surplus to the Government. The use of small hullers might then be encouraged, as they require only one third the commercial energy of the large industrial mills.

D. GROUNDNUTS

Background

With more than 40 percent of Senegal's cultivated land, representing some 1,100,000 hectares, set aside for the production of oil groundnuts in a typical year, it is evident that the agricultural economy of Senegal hinges largely on the success of the groundnut crop. Besides providing the main source of income for the nation's rural population, groundnuts generate about 40 percent of Senegal's export earnings and contribute some 50 percent of the total value added by agriculture. In addition, groundnuts supply the major raw material used in the oil processing industry which accounts for about 25 percent of total industrial output and provides ten percent of industrial employment. They also serve as the principal source of oil in Senegalese diets.

Groundnuts are cultivated principally in the Groundnut Basin where the light and sandy soils are suited to this crop, in that excessive soil fertility tends to promote leaf growth at the expense of the nuts. Within the Basin, the Sine-Saloum region alone accounts for almost 45 percent of total domestic production, and Diourbel and Thies for an additional 26 percent and 13 percent respectively. Some groundnuts are also cultivated in the Casamance and Senegal Oriental.

In an average year, Senegal produces one million tons of groundnuts in the shell, of which approximately 700,000 tons are processed by the domestic oil mills. There may, however, be considerable variation in year to year production, as the output is linked to climatic conditions (the amount and timing of rainfall) and, to a lesser extent, the farm-gate price. After 1967, Senegal lost the protection of guaranteed groundnut prices in French markets. The consequent fall in the farmgate price, and the drought which affected the country between 1968 and 1973, caused sharp annual fluctuations in both area planted in groundnuts and total groundnut yields (Exhibit 4.17). Thus in 1973, a drought year, production amounted only to

Exhibit 4.17

Production and Farmgate Price of Oil Groundnuts
1961-1977

Year	Area (thousand ha)	Yield (kg/ha)	Production (thousand tons)	Farmgate Price ($/ton)
1961	977	913	892	96
1962	1,026	969	995	96
1963	1,015	900	914	96
1964	1,084	878	952	96
1965	1,055	966	1,019	96
1966	1,114	1,048	1,168	96
1967	1,114	824	923	96
1968	1,164	864	1,005	78
1969	1,191	697	830	78
1970	953	828	789	78
1971	1,049	556	583	85
1972	1,060	932	988	100
1973	1,071	532	570	100
1974	1,026	658	675	111
1975	1,152	862	994	180
1976	1,176	981	1,424	180
1977	1,330	889	1,182	180

Source: Marchés Tropicaux et Méditerranéens, February 17, 1978. op. cit. Prices converted to U.S. dollars at exchange rate of $1.00 = 230 francs CFA.

570,000 tons, while three years later in 1976, production exceeded 1,400,000 tons in response to favorable weather and an 80 percent rise in the price being offered to Senegalese groundnut producers. There is also some tendency on the part of Senegal's groundnut producers to devote more land to this crop the year following a good harvest, as in 1977 when the area cultivated in groundnuts increased by 13 percent from 1,176,000 to 1,330,000 hectares.

Not included in the data shown in Exhibit 4.17 is Senegal's production of confectionary groundnuts (arachides de bouche), a crop which was introduced in 1967 as part of the Government's program to diversify the agricultural base. These hand-picked, selected nuts are in great demand in export markets where they are sold as salted peanuts or used in the manufacture of peanut butter and bakery products. Senegal's volume of production is still modest with 18,000 tons of confectionary groundnuts produced in 1976 compared with 1.4 million tons of oil groundnuts produced in the same year. However, the outlook for the future is encouraging with the industry having shown positive growth trends in both cultivated area and export earnings since 1967.

Farmgate prices for both oil and confectionary groundnuts are set by the Government. After France removed price supports for groundnuts, the Government was forced to adjust to fluctuating world market prices. Thus, price changes have been more frequent since 1967 even though, once fixed, they remain stable for the duration of the growing season.24/

The groundnut distribution system in Senegal is also government-controlled, with ONCAD having a monopoly on the purchase of all harvested

---

24/ Groundnut prices in Senegal are usually aligned with those obtaining on the world market. The Government has come under some criticism, however, for not setting prices until well into the rainy season, when farmers' decisions as to how much land they will plant to groundnuts have already been made. For this reason, decisions to increase production are usually made in response to prices and weather conditions prevailing during the previous crop season.

groundnut production that is not retained for seed or on-farm consumption. Inevitably, a small percentage of the production, perhaps 50,000 tons per annum, is marketed illegally, mostly in neighboring countries. The actual volume of groundnuts entering illegal channels is apt to be highest in areas bordering the Gambia and depends upon the price being offered by ONCAD -- a price which applies to all parts of the country regardless of differences in production and transportation costs. It may also depend on how expeditious ONCAD is in making cash payments to the farmers.25/

In a typical year, only about five percent of the groundnut crop is withheld by farmers for home use or seed. An additional ten percent of the production represents payment in kind of seed advanced by ONCAD to the farmer at the beginning of the season.

Consistent with the Government's resolve to modernize the groundnut industry, SODEVA, the regional development agency for the Groundnut Basin, actively encourages the adoption of improved production practices and agricultural inputs through its extension programs. It is also involved in the development of new areas for the cultivation of confectionary groundnuts. Fertilizers, seeds and other agricultural inputs are distributed by ONCAD to the farmer via a network of producer cooperatives. With the exception of seeds, which a farmer is required to reimburse in kind on a 5:4 ratio basis, purchases are made on credit (also obtained through ONCAD) and paid for out of the money received from sale of the harvested crop.

The Fifth Plan has as an objective the stabilization of oil groundnut production at 1.2 million tons annually, a level that, although well above the average of the last 15 yers, is nevertheless somewhat below the 1975/76

25/ Slowness in payment to producers is a significant system constraint. ONCAD frequently pays farmers with vouchers instead of cash pending sale of the groundnuts to the oil mills, and those farmers who are hard pressed for cash often sell the vouchers to intermediaries at one-third to one-half their real value.

output and about equal to that for 1976/77. A major project within the Plan is oriented specifically toward increasing the confectionary groundnut harvest to 63,000 tons by 1981. This very significant increase over current production levels is to be attained by expansion of the growing area and development of improved crop varieties at a projected cost of some $5.2 million over the four-year period.

System Methods, Costs, and Energy Requirements

Production

The average household in Senegal plants about three hectares in groundnuts and obtains yields on the order of 900 kg/ha. There is, however, considerable fluctuation in output reflecting the vagaries of weather, the region of production and the production techniques that are employed.

In the Groundnut Basin, the crop production cycle begins in April and May, prior to the rainy season, when the lands are cleared and prepared for both cereals and groundnuts. Planting takes place after the first rains, but if there should be too long an interval between the first and second rains, the fields must be replanted. Fertilizer, where used, is applied at seeding. Several cultivations with a hoe may also occur. The plants mature in three to four months, again depending upon the length of the rainy season and the seed variety used. Harvesting begins in mid-October, following the harvesting of early millet.

During the groundnut cycle, peak periods of labor demand occur at planting, early weeding, and harvest. It is at these times that farmers who lack animal traction may suffer from temporary labor shortages, forcing them to neglect or even abandon potentially productive fields unless they can hire temporary workers. However, this situation occurs less frequently in the Groundnut Basin, since it has been estimated that three out of every four of the Basin's farmers has either an animal-drawn seeder, a weeder-

digger, or both. While donkeys and horses are still used by the majority of these farmers, oxen are becoming increasingly commonplace in some areas, particularly in Sine-Saloum where about 20 percent of the groundnut producers now rely on these animals for traction. One reason for the success of animal traction in Sine Saloum is that this region is largely populated by the Serer, who have long combined livestock raising with farming. Their experience with livestock, and the fact that they already owned animals, eased the introduction of animal-drawn equipment by SODEVA. Further growth in the use of oxen power in groundnut production is to some extent hindered by the high initial investment costs of both animals and equipment. For example, the average farmer takes four years to pay for a plow, which is sold on credit at a 25 percent rate of interest. However, there does exist a fairly good market for renting out animals, animal implements, and animal-drawn transport services in the Basin, and this helps to defray the high costs for many farmers.

Seeders, weeders, groundnut diggers, plows, and other types of animal-drawn equipment are distributed by ONCAD through the local producers' cooperatives. ONCAD also makes credit available to groundnut producers, in cooperation with SODEVA which provides agricultural extension services, including training in the use of equipment and other improved production practices, throughout the Groundnut Basin. Since groundnuts are the main source of Senegal's foreign exchange earnings, it is not surprising that this crop has consistently received a greater share of government support than any other crop in Senegal. The results of government involvement are reflected in the higher level of sophistication of production methods compared with those used in cultivating cereals and other subsistence crops.

There are four principal methods by which groundnuts are produced in Senegal. For purposes of this analysis, these are termed traditional, prepared, comprehensive and intensive. The first three are used in the production of oil groundnuts while the last is used by confectionary groundnut producers as well.

Under traditional cultivation, seeding, weeding and harvesting are done by hand or with hand tools, such as the long-handled hoes called "ilers." Before the onset of the rainy season, the farmer clears his land for planting by burning away the underbrush. The groundnuts are usually grown in rotation with millet and fallow. Output varies from 500 to 900 kg/ha depending on rainfall, soil quality and other factors with yields increasing the further south the production takes place.

The second technique, prepared cultivation, uses fungicide-treated improved seed varieties and some degree of animal traction, typically a seeder and hoe drawn by a horse or donkey. The use of these animals reduces the heavy demand on the farmer's time during the peak labor periods. Yield ranges from 750 to 1,200 kg/ha.

The comprehensive cultivation method involves treated seeds and animal traction in addition to the use of fertilizers (primarily 8-18-27 or 6-20-10) at a recommended dosage of 100 to 150 kg/ha. Stump removal and plowing prior to planting are also recommended. When this method of cultivation is used, groundnut yields range from 850 to 1,500 kg/ha. A more intensive package, calling for treatment of the soil with rock phosphate and heavy dosages of pesticides and fungicides, has been developed for use mainly in conjunction with confectionary groundnut production. This production was initially concentrated in the Sine-Saloum region but has recently been extended to the Northern Groundnut Basin (Louga), where a new short-cycle seed variety tailored to conditions in that area has been introduced.

Exhibit 4.18 provides an estimate of the proportion of groundnut area that is cultivated by each of these production methods in a typical year and the share of total production they contribute. Among the assumptions used to develop this estimate are that treated seeds are sown on 85 percent of all area cultivated in groundnuts, and that commerical fertilizers are applied to 28 percent of the cultivated area.

Exhibit 4.18

Senegal: Groundnut System
Estimated Share of Area Cultivated and Total Production,
By Production Method

Production Method	Area (thousand ha)	Share (%)	Production (thousand tons)	Share (%)
Traditional	165.0	15.0	100.0	10.0
Prepared (treated seeds)	627.0	57.0	550.0	55.0
Comprehensive	294.4	26.8	335.0	33.5
Intensive	13.6	1.2	15.0	1.5
Total	1,100.0	100.0	1,000.0	100.0

Source: Checchi and Company estimates

Apart from animal traction, the major energy-related inputs used in groundnut cultivation are treated seeds, fertilizer, and insecticides. Selected seed varieties are treated with a fungicide to prevent attack by a fungus during germination. It has been estimated that this practice alone increases the yield by 20 percent. ONCAD reports that 85 percent of groundnut producers in Senegal now use selected seeds, compared with only 40 percent in 1962. Growth has been relatively steady, and even during the poor growing years of 1971, 1973, and 1974 when fertilizer consumption showed a marked decline, selected seed usage remained high at 72 percent, 85 percent, and 84 percent, respectively. This provides good evidence of farmer confidence in the efficacy of the selected seed varieties, and also of the success of SODEVA's extension efforts in this area.

Farmers are encouraged to use fertilizer and, when possible, animal manure, in groundnut cultivation. With animal manure in short supply, however, ONCAD distributes significant quantities of 8-18-27, 6-20-10, and other compound fertilizers. An average of 44,000 tons per year of these chemicals were supplied to groundnut farmers between 1974 and 1977, in addition to about 180 tons of insecticides and fungicides.

The actual amount of these fertilizers and pesticides that a farmer can buy on credit is determined by the quantity of groundnuts which he has sold to ONCAD over the preceding three years. Since there may be significant variations in sales from year to year, this enables ONCAD to assess more accurately a farmer's real productivity. Moreover, there are indications that groundnut farmers tailor their cultivation practices for each year to their crop yield expectations. The overall increase in fertilizer consumption from 11,000 tons in 1960 to almost 50,000 tons in 1976, however, does not reveal the fine-tuning adjustments made by the farmers. The combined effects of the drought and low groundnut prices after 1968 contributed to a decline in the amount of fertilizer used; average consumption fell from 41.5 kg/ha in 1968 to only 6.2 kg/ha in 1971, for example. This suggests that farmers invest in fertilizer only when they expect a return on their investment; as sufficient rainfall is necessary for fertilizers to significantly increase yields, fertilizer use is unprofitable in drought years.

Drying and Threshing

After the harvest, the groundnuts are placed in the sun to dry, then threshed by hand and taken to household storage facilities or to the cooperatives. No fuel or chemical inputs are used to dry and thresh groundnuts in Senegal. However, some additional costs are imposed by losses due to inadequate drying and threshing methods, which are roughly estimated at five percent of the harvested crop.

Inadequate drying procedures may also be responsible for contamination of the groundnut tissues by the mushroom-like aspergillus flavus fungus,

which produces a poison called aflatoxin. The aflatoxin mold, which thrives in dampness, has been identified as a cancer-causing substance in animals fed on the oilcake residue of the groundnut oil extraction process. It has also been implicated as at least a contributing agent in fires of spontaneous combustion which yearly destroy significant quantities of the groundnut crop. The problem persists, however, because farmers are reluctant to incur too much weight loss to water evaporation in drying, as this reduces the value of their crop. It has been suggested that farmers might be persuaded to dry their groundnuts for the proper length of time if ONCAD were to offer a higher price for an adequately dried product.

Storage

The groundnuts retained by the farmer for use by his family are stored in the shell in sacks in traditional facilities. There is some loss of this stored crop to rats and insects.

Groundnuts destined for ONCAD's oil mills are first brought by the farmer to his local cooperative where they are piled in pyramids in the open air to await further transfer by ONCAD. Whether covered by a tarpaulin or not, these groundnut stores are attacked by insects and rodents which consume an estimated five percent of the output. This figure would be considerably higher if it were not for the fact that ONCAD removes the groundnuts from the cooperatives at frequent intervals and transports them to its own collection centers (called seccos) where there are usually somewhat better storage facilities.

ONCAD possesses storage space for 240,000 tons of groundnuts, primarily in the principal groundnut-producing regions of Sine-Saloum, Diourbel, and Thies. These storage facilities, while very considerable, are still not sufficient to handle the entire supply of groundnuts marketed during the peak harvest period. Consequently, ONCAD must store a varying quantity of unshelled nuts outside, where they are prey to insects and rodents. Moreover, if groundnuts should be left outside until the beginning of the

rainy season, they may be damaged by moisture which may cause the nuts to germinate and mildew, thereby reducing both the quantity and the quality of any oil produced. Damp storage conditions also provide ideal growing conditions for the aflatoxin mold discussed above.

Except for the occasional pest extermination procedures carried out by ONCAD at its storage facilities every six to eight months, there are no energy-related inputs used in the groundnut storage system in Senegal.

Transport

Farmers generally transport their own groundnuts by hand or in animal-drawn carts26/ to the cooperative. ONCAD is responsible for providing transportation from the cooperative to its collection centers and ultimately to the groundnut processing plants. However, the Government is now experimenting with the idea of allowing those cooperatives which have a sizeable groundnut turnover to make their own transportation arrangements.

Because of the poor condition of the roads servicing the cooperatives, groundnut collection must take place in three phases. First, the unshelled nuts are moved from the cooperatives to ONCAD collection centers which are located near main roads for ease of access. Then, the crop must be transported to ONCAD's central storage seccos and, finally, from these facilities to the processing plants. Small (3-8 tons) and medium-size (ten tons) trucks are used for the first two stages of crop transport, whereas large (20 tons) ones are used in the final stage. ONCAD has its own fleet of approximately 340 trucks (1974), but also relies heavily on the private sector for groundnut transportation. Private truckers transport the nuts at official rates set by ONCAD.

26/ As with other types of animal-drawn equipment, these carts are distributed to farmers through ONCAD and the producers cooperatives. By the end of 1975, a total of 61,255 carts had been distributed by ONCAD, approximately double the number in use in 1971.

Most of the transport activity takes place in the six months between December and May. Theoretically, the trucks are supposed to carry fertilizer, improved seeds, and agricultural equipment on their trips to the co-operatives to pick up the nuts so as to reduce the number of empty back-hauls although, in actuality, some of these inputs may not reach the farmers until June or July. The trucks are in great demand during this six-month period, as generally speaking they provide the most economical means of groundnut transport. An estimated nine percent of the crop, however, is moved by rail, and another one percent by river boat.

The primary (from field to silo) and secondary (from silo to factory) groundnut transportation network has historically been poorly organized and, as a consequence, additional, unnecessary costs are often incurred. For example, lack of adequate means of transportation to move the groundnuts out of the open storage silos on schedule can result in losses from rain damage. Also, delayed deliveries to the oil mills can prevent the mills from taking advantage of the high external market prices that obtain during certain times of the year.

Exhibit 4.19 presents an estimate of the amount of fuel required to run the ONCAD truck fleet during the six-month groundnut collection season. The estimate was developed from data contained in a 1972 study of Senegal's highway system and needs to be updated with more current information. It does, however, given an idea of the magnitude of fuel consumed in moving groundnuts from the co-ops to the mills, which is on the order of three million liters per year.

Processing

Since 1975, SONACOS (Société Nationale des Oléagineux du Sénégal), a mixed enterprise owned 65 percent and 35 percent respectively by the Government and the oil plants, has been charged with coordinating delivery of the raw materials to the groundnut processing plants and marketing the manufactured oil products. Two of these products, crude oil and oil cake,

Exhibit 4.19

Senegal: Groundnut System

Estimated Fuel Consumed in Groundnut Transport, Per Season

Vehicle Class (and fuel type)	Vehicles (number)	Distance Travelled (km/season)		Fuel Consumption Rate (liters/km) 1/		Total Fuel Consumption (kl/season)		
		Dirt	Paved	Dirt	Paved	Dirt	Paved	Total
Light (gasoline)	161	15,000	3,000	.4004	.3503	967	169	1,136
Medium (diesel)	78	15,000	5,000	.4505	.3503	527	137	664
Heavy (diesel)	99	-	25,000	-	.4506	-	1,115	1,115
TOTAL	333	30,000	33,000	-	-	1,494	1,421	2,915

1/ Includes oil and lubricants.

Source: Louis Berger/Orgatec, op. cit.

the latter used as animal feed, are processed primarily for export markets. A third product, refined oil, is manufactured for domestic sale as well as export. The domestic consumption averages around 40,000 tons per annum, or more than one-half of the total refined oil production. The price differential per ton between crude and refined oil varies between 7 and 15 percent.

There are five oil mills in Senegal with a combined capacity of 990,000 tons (Exhibit 4.20). In addition to their groundnut oil extraction activities, some of these mills also produce small amounts of cottonseed oil, margarine, vinegar, and toiletries.

Exhibit 4.20

Senegal: Groundnut System
Location and Capacity of Oil Mills

Mill	Location	Annual Processing Capacity (tons 1/)
Lesieur-Afrique	Dakar	350,000
Sodec	Lyndiane (Kaolack)	280,000
Petersen	Dakar	150,000
SEIC	Ziguinchor	65,000
SEIB	Diourbel	55,000
Total		990,000

1/ Raw product

Oil is extracted either with a double press or an American screwpress. Yield per ton of unshelled nuts is approximately 330 kg of oil, plus 430 kg

of oil cake and 240 kg of shells. The mills burn fuel to produce steam, which is then used to power turbines that generate electricity for running the processing equipment. Many mills burn groundnut shells for fuel, although the use of shells appears to fluctuate and the mills seldom rely exclusively on this energy source, the availability of which depends on the success of the groundnut harvest.

Whether or not there is a surplus of groundnut shells not required for oil production and thus available for other uses has been the subject of some controversy. One study conducted in 1977 by a French consulting firm found an excess of 42,000 tons of shells at the oil mills and another 28,000 tons at four private shelling plants (décortiqueries). However, the size of the surplus, if ary, is likely to vary from year to year with variations in the level of groundnut production. Also, the estimated availability of shells at the décortiqueries appears high in the light of the total annual confectionary groundnut production of only 12,000 to 18,000 tons unless, as is possible, these plants also shell groundnuts for distribution by ONCAD as seeds.

Although part of the oil mills' energy needs are met by burning the groundnut shells, some commercial energy is also consumed in groundnut processing, amounting in 1975 to about 1.156 million liters of liquid fuel and 1.526 million kwh of (purchased) electricity.27/ No data are available on the requirements of the shelling plants which handle the confectionary groundnut crop, but it is likely that these are comparatively low.

Groundnuts which are retained by the farmer are generally pounded with a pestle into a paste which is placed in a cloth and then squeezed to press out the oil. The oil is purified by boiling and the groundnut cake that

---

27/ From SONED, les Activités du Secteur Economique Moderne au Sénégal, op. cit. 1975 prices of $0.10 per kwh of electricity and $0.50 per liter of liquid fuel (gasoline, oil, and lubricants) were assumed in converting values to quantities. It was further assumed that groundnut processing accounted for 90 percent of total fuel and electricity consumption by the mills.

remains is used as animal feed or fertilizer. Groundnut paste may also be used in sauces with millet or rice, or the nuts may be roasted and eaten whole. Regardless of the manner of preparation, traditional processing of groundnuts requires no inputs of commercial energy.

Energy Input-Product Output Summary

Exhibit 4.21 illustrates the flow of Senegal's groundnut crop through the product system, showing the various methods used in production, storage, transport, and processing and the estimated tonnage handled by each method in a typical year. Estimated consumption of fuel, fertilizers, and other chemicals is shown by activity and method on the accompanying reference tables. Although lack of data concerning the energy consumption patterns of several system components (including rail and boat transport and confectionary groundnut processing) precludes analysis of total energy system expenditures, the accounting is sufficient to indicate the overall magnitude of these expenditures and at which stages of the system they occur.

About 4,000 kiloliters of liquid fuels are needed annually to run ONCAD's truck fleet and the oil mills, plus whatever is used by the railroad and the shelling plants. The mills also consume an estimated 1,526,000 kwh of electricity over and above that generated on site by combustion of the groundnut shells. Other commercial energy inputs in the groundnut system include the chemicals used by farmers practicing improved and intensive methods of production, which amount to some 44,000 tons of fertilizers and 180 tons of pesticides and fungicides on an annual average basis. This is equivalent to between 124 and 160 kgs of materials for every ton of (net) crop output, depending on the level of intensity of the production techniques employed.

The data in the flow chart and tables also point to areas of the system where significant losses are incurred. It is roughly estimated that, for every ton of product made available for end use consumption, 1.1 tons must be produced to make up for losses resulting from inadequate drying and

Exhibit 4.21

GROUNDNUT SYSTEM: PRODUCT FLOW
(in 1000 tons of unshelled groundnuts)

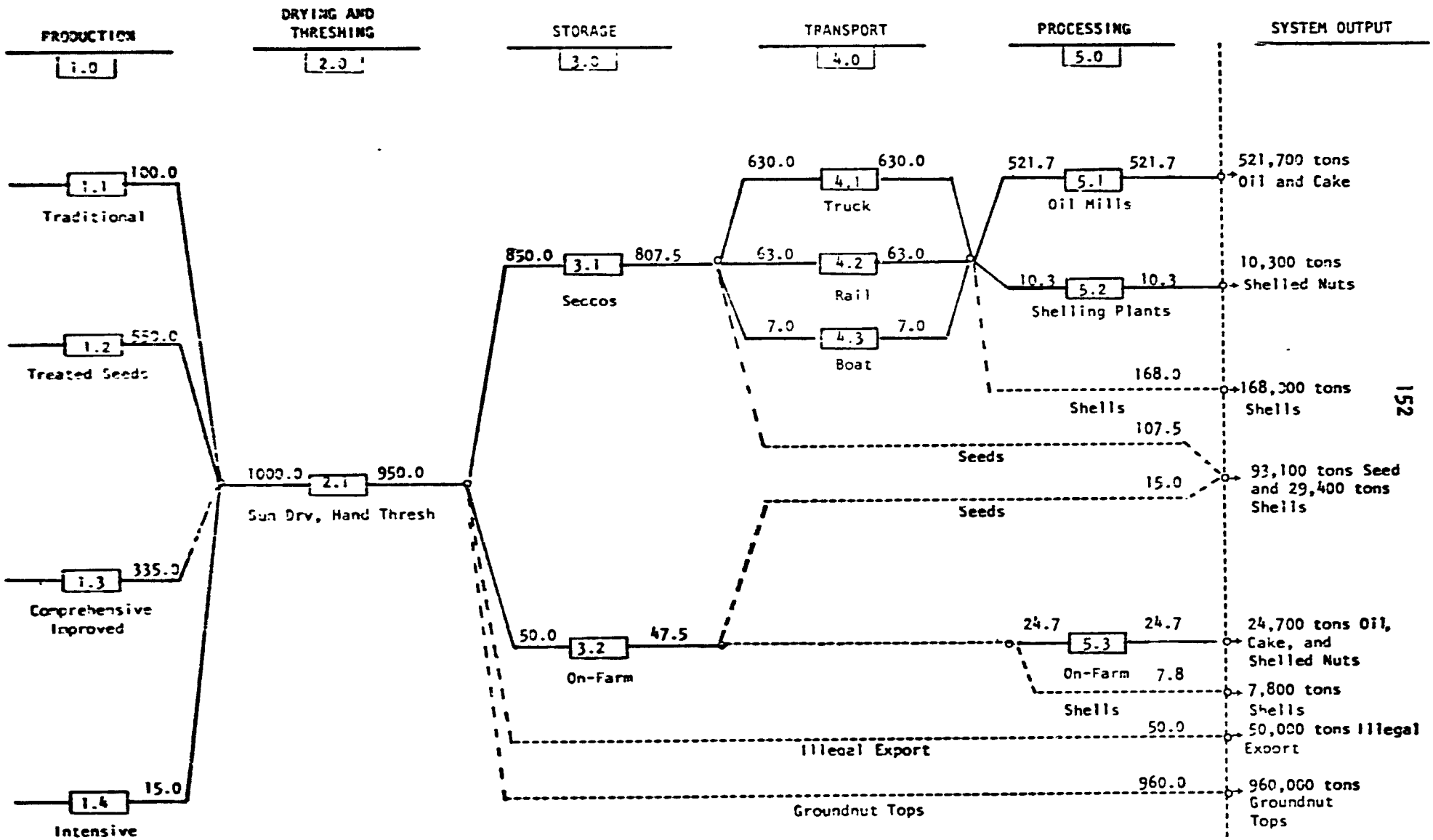

Exhibit 4.21A

Senegal: Groundnuts System

Total Energy Inputs, Product Losses, and Net Product Output
By System Activity and Method

	Edible Product and Shells		Energy Inputs				
	Net Outputs (tons)	Losses (tons)	Liquid Fuel (kl)	Electricity (kwh)	Residues (tons)	Fertilizers (tons)	Other Chemicals 1/ (tons)
1.0 PRODUCTION							
1.1 Traditional	100,000	-	-	-	-	-	-
1.2 Improved (treated seeds)	550,000	-	-	-	-	-	-
1.3 Improved (comprehensive)	335,000	-	-	-	-	41,500	152
1.4 Intensive	15,000	-	-	-	-	2,500	28
2.0 DRYING AND THRESHING							
2.1 Sun Dry, Hand Thresh	950,000	50,000	-	-	-	-	-
3.0 STORAGE							
3.1 Seccos	807,500	42,500	-	-	-	-	n.a.
3.2 On-Farm	47,500	2,500	-	-	-	-	-
4.0 TRANSPORT							
4.1 Truck (gasoline or diesel)	630,000	-	2,915	-	-	-	-
4.2 Rail	63,000	-	n.a.	-	-	-	-
4.3 Boat	7,000	-	n.a.	-	-	-	-
5.0 PROCESSING							
5.1 Oil Mills	656,500	-	1,156	1,526,000	150,000	-	-
5.2 Shelling Plants	33,500	-	n.a.	n.a.	-	-	-
5.3 On-Farm	32,500	-	-	-	-	-	-
TOTAL	955,000	95,000	n.a.	n.a.	150,000	44,000	180

n.a. = not available.

1/ Insecticides and fungicides.

Exhibit 4.21B

Senegal: Groundnut System

Energy Inputs and Product Losses per Ton of Output, by System Activity and Method
By System Activity and Method

	Edible Product and Shells		Energy Inputs				
	Net Outputs (tons)	Losses (tons)	Liquid Fuel (liters)	Electricity (kwh)	Residues (tons)	Fertilizers (kg)	Other Chemicals 1/ (kg)
1.0 PRODUCTION							
1.1 Traditional	1	-	-	-	-	-	-
1.2 Improved (treated seeds)	1	-	-	-	-	-	n.a
1.3 Improved (comprehensive)	1	-	-	-	-	123.9	0.5
1.4 Intensive	1	-	-	-	-	166.7	1.9
2.0 DRYING AND THRESHING							
2.1 Sun Dry, Hand Thresh	1	0.053	-	-	-	-	-
3.0 STORAGE							
3.1 Seccos	1	0.053	-	-	-	-	n.a.
3.2 On-Farm	1	0.053	-	-	-	-	-
4.0 TRANSPORT							
4.1 Truck (gasoline or diesel)	1	-	4.62	-	-	-	-
4.2 Rail	1	-	n.a.	-	-	-	-
4.3 Boat	1	-	n.a.	-	-	-	-
5.0 PROCESSING							
5.1 Oil Mills	1	-	1.68	2.22	0.21	-	-
5.2 Shelling Plants	1	-	n.a.	n.a.	-	-	-
5.3 On-Farm	1	-	-	-	-	-	-

n.a. = not available.

1/ Insecticides and fungicides.

storage procedures. While there may be additional losses in other stages of the groundnut system, these cannot be estimated on the basis of the existing data and thus no accounting of them has been made.

The final column of Exhibit 4.21 breaks down the output of the groundnut system by end product. In addition to oil, cake, and shelled nuts, these products include approximately 205,000 tons of groundnut shells and 960,000 tons of groundnut tops. No data are available on the uses to which these tops are put in Senegal; however, it may be assumed that at least some portion of them are consumed by grazing livestock.

Energy-Related Problems and Opportunities

Because groundnuts are typically grown in conjunction with millet on the same small family landholdings, the production systems for both crops share some of the same problems in common. Key among these problems, in addition to inadequate rainfall and exhausted soils, are labor shortages during critical stages of the production cycle and low levels of fertilizer usage.

Although in many respects millet cultivation complements groundnuts production, in other respects it competes with groundnuts for the same resources. This is especially true in the case of farmers who rely solely on human labor to plant and tend their land. Seeding, weeding, and harvest activities for each crop must be carefully scheduled so as not to overlap, and the slightest delay can overburden the available labor supply to the extent that the family is forced to abandon potentially productive fields. The Government of Senegal, with assistance from USAID, the World Bank, and others, has sought to address this problem by encouraging farmers to employ animal traction in connection with major production tasks. This effort, already several decades old, has been quite successful in the Groundnut Basin, where an estimated three out of every four farmers now own at least one piece of animal-drawn equipment.

The Government is also involved in promoting the application of chemical fertilizers on groundnut and millet lands throughout the country.28/ This effort will be especially important in raising yields in the Groundnut Basin, where limits on land availability have meant the reduction, and in some cases the elimination, of fallow periods upon which soil fertility depended in the past. Unlike the animal traction program, however, the future of this effort may be seriously threatened by rising energy costs, making it a likely candidate for the type of intervention with which this study is concerned.

Actions that would help reduce the dependence of the Government's soil fertility improvement program on imported energy sources would benefit not only groundnut producers, but also producers of millet, rice, and other crops. There are other energy-related problems and opportunities within the groundnut system, however, which are more strictly crop-specific. These include the need for aflatoxin control and the potential for using energy contained in surplus groundnut shells as a substitute for wood-based cooking fuels.

Aflatoxin Control

A high proportion of Senegal's groundnut crop is affected by aflatoxin. Drought and insect damage can cause contamination by the *aspergillus flavus* fungus while the groundnuts are still in the fields; improper drying and damp storage conditions promote fungus growth after harvest. Among the measures which have been proposed to combat the problem are the development of aflatoxin-resistent seed varieties, the more widespread application of insecticides and fungicides, and improved methods of crop drying after harvest. ITA and IPM are cooperating on an applied research project involving the use of solar dryers to destroy the fungus before the groundnuts are

---

28/ Problems and opportunities related to fertilizer usage are discussed elsewhere in this chapter (see Section B).

stored. It is understood that ISRA and the oil mills are also engaged in aflatoxin-related research, although no information is available concerning either the nature or the extent of these activities.

Groundnut Shell Utilization

An important byproduct of Senegal's groundnut system is the estimated 205,000 tons of shells or husks that are available for other uses in a typical year. The largest concentration of these shells (nearly 165,000 tons) occurs at the five oil mills where they are removed from the groundnuts prior to processing. Some sources contend that the entire volume of these shells are burned on-site, whereas others claim that a sizable surplus exists which is now being put to no useful purpose. If the latter of these two views were in fact correct, this would represent a considerable waste of domestic energy resources, especially since processes exist whereby groundnut shells can be converted to briquettes for use as cooking fuel or, alternatively, ground and mixed with other substances to produce plywood or animal feed. Even if the oil mills did consume all the shells to which they had access, additional quantities of this byproduct might be available at plants which handle the confectionary crop and prepare seed for distribution by ONCAD. These plants may be particularly promising future sources of shells in light of the fourfold increase in confectionary groundnut production projected for the Fifth Plan period.

E. ARTISANAL FISHING

For both statistical and planning purposes, the fisheries subsector in Senegal is generally broken down into three distinct segments: (1) industrial fishing, (2) artisanal off-shore or maritime fishing, and (3) artisanal inland fishing. The industrial fishery consists of modern commercial vessels whose catch is usually destined for some kind of factory processing prior to final sale or export. Artisanal fishing is the domain of numerous small-scale fishermen using traditional methods and equipment and producing almost entirely for auto-consumption and domestic markets. Artisanal maritime fishing is practiced in coastal and certain brackish river waters, whereas artisanal inland fishing takes place along the Senegal River and in nearby freshwater lakes.

In the first part of this section, some background data on all three segments of Senegal's fishing industry are presented. The remainder of the section focuses on the production and utilization of the artisanal maritime fishing catch. There are three principal reasons why artisanal maritime fishing has been selected for analysis. First, it accounts for nearly 60 percent of total fish production, and between 75 and 80 percent of domestic fish consumption, in Senegal. Second, unlike the industrial system which has a high percentage of foreign ownership and is heavily concentrated in Dakar, the artisanal system is strictly indigenous and generates income, directly or indirectly, for many coastal villages. Third, further growth in the productivity of artisanal fishing is likely to require more energy-intensive equipment and infrastructure than has been the case to date. There should be opportunities to influence the selection of these inputs in favor of those that are most efficient and least costly from an energy perspective.

Inland fishing is not subjected to separate analysis because it represents a relatively minor component of the artisanal system and its future is somewhat uncertain. By and large, however, small-scale inland and off-shore fishermen use similar methods to produce and process their catch,

suggesting that interventions directed at one type of fishing may be applicable to the other type as well.

Background

Exhibit 4.22 shows trends in tonnage production for each of the three major types of fishing practiced in Senegal. Artisanal maritime fishing is clearly the predominant segment of the industry, accounting for nearly 70 percent of the total catch (by weight) in 1970 and close to 60 percent in 1976. In terms of growth, however, it has been losing ground to industrial fishing, the output of which almost doubled between 1970 and 1976. Artisanal inland fishing, which has been adversely affected by the Sahelian drought as well as by a lack of adequate infrastructure, remains a distant third, representing under nine percent of the total in 1970 and less than eight percent in 1976.

Exhibit 4.22

Change in Volume and Share of Fish Production, By Type: 1970 - 1976

Type of Fishing	1970		1976		1970 - 1976
	Volume (tons)	Share (%)	Volume (tons)	Share (%)	Total Growth (%)
Artisanal Maritime	117,000	68.1	130,000	58.5	11.1
Industrial Maritime	39,800	23.2	75,000	33.8	88.4
Artisanal Inland	15,000	8.7	17,000	7.7	13.3
Total	171,800	100.0	222,000	100.0	29.2

Source: Aubray, Roger, The Fisheries of Senegal: A Comprehensive Study. FAO (Rome), 1977. The figures for artisanal production are based on estimates developed by the FAO after the results of field surveys showed official statistics to be inflated by as much as 100 percent. The official figure for the 1976 artisanal maritime catch is 279,000 tons

In 1976, the industrial fleet was made up of about 160 boats, fewer than half of which were under the Senegalese flag. About two-thirds of these boats were trawlers or handliners; the balance consisted of tuna and sardine seiners and French-owned pole and line vessels. The handliners are usually classified as part of the artisanal fleet, but are considered by the FAO and others to represent a "semi-industrial" link between the two principal types of maritime fishing craft in Senegal. While there were only five handliners in operation in 1976, a program was underway to construct an additional 36 such vessels during the period of the Fifth Plan (1977- 81).

Industrial fishing provides a living for an estimated 3,000 Senegalese fishermen, the majority of whom reside in or near Dakar where this segment of the industry is concentrated. Most of their catch, which includes tuna, sardines, shrimp, and assorted other fin and shell fish, is destined for processing and/or export. There are some 20 business enterprises in Senegal involved in processing the industrial catch, with a combined annual capacity of 400,000 tons. Among these are four or five canning companies, at least ten firms specializing in fresh freezing and ice production, and several diversified fish treatment (salting, drying, freezing) plants. There are also factories which produce flour, oil, and cattle feed from fish residues and wastes. In addition, the industrial segment of the fishing industry encompasses some six or seven enterprises engaged in operating the fishing fleet, as well as those involved in the transportation and export of fish products. Most of the larger firms are located either in Dakar or in Ziquinchor (Casamance). Some are partially owned by the Senegalese Government, while others are in private Senegalese or foreign hands.

Approximately 70 percent of the industrial catch is exported to markets in Europe and West Africa; the remaining 30 percent (23,000 tons in 1976) is sold and consumed in Senegal. However, by far the largest part of domestic demand, especially in rural areas, is satisfied by artisanal fishing.

Exhibit 4.23 provides an estimate of the disposition of the 1976 artisanal maritime and inland fishing catch, derived from FAO data. About 25 percent of the maritime production was auto-consumed or processed by traditional methods into preserved products. The other 75 percent was sold fresh on landing, much of it to small-scale traders (called bana-bana) for resale either within the region of production or in major urban markets. Processing accounted for a comparatively higher proportion of the inland fishing catch (55 percent), which originates in parts of Senegal that are poorly equipped for transporting fresh fish to distant population centers.

Exhibit 4.23

Estimated Disposition of the Artisanal Fisheries Catch: 1976

	Inland		Maritime		Total	
	Volume (tons)	Share (%)	Volume (tons)	Share (%)	Volume (tons)	Share (%)
Autoconsumption	3,000	17.6	9,100	7.0	12,100	8.2
Processing	9,350	55.0	23,400	18.0	32,750	77.2
Fresh Sale	4,650	27.4	97,500	75.0	102,150	69.0
Total	17,000	100.0	130,000	100.0	147,000	100.0

Source: Aubray, op. cit.

The maritime production data include brackish water species caught in the Casamance and Saloum Rivers, whose fisheries are the responsibility of Senegal's Marine Fishery Department. The inland catch statistics, which reflect the results of fishing along the Senegal River, in the Delta, the Valley, and in the adjacent Lac de Guiers, are compiled by the Waters and

Forests Department. The FAO has estimated that out of approximately 500,000 people who live on the Mauritanian and Senegalese sides of the Senegal River, about 10,000 are involved full-time in fishing, and another 10,000 are part-time fishermen. Fishing is believed by some to account for 15 to 20 percent of the gross income of the population in the river basin, three-quarters of which is Senegalese.

The maximum annual yield of the entire Senegal River Basin has been calculated by experts at 35,000 tons, with 25,000 tons representing Senegal's share.29/ However, it is anticipated that dams planned for construction within the next ten years will reduce this potential by more than 40 percent. Thus, the output of Senegal's inland fisheries will eventually decline unless measures are taken to develop other fishing areas. The current Plan contains several projects designed to increase inland fish production, including one concerned with exploitation of Lac de Guiers and another concerned with the development of swamplands for intensive aquaculture.

The potential yield of Senegal's artisanal marine fisheries, by contrast, far exceeds current levels of production.30/ According to official government sources, this segment of the industry employs 30,000 to 40,000 individuals on either a full or part-time basis, the majority of whom live in Thies and Cap Vert. In 1976, their fleet consisted of some 6,100 *pirogues*, traditional wooden canoes fashioned from dug-out tree trunks on which a planked structure has been superimposed. More than 50 percent of the fleet is equipped with outboard motors, and the balance is driven by pad-

---

29/ See C. Reizer and G.L. Chevalier, "Effects on the Fishery of the Hydro-Management of the Senegal River," 1972, cited in Aubray, *op. cit.*

30/ The FAO estimates the carrying capacity of Senegal's offshore marine waters at 400,000 tons per year, more than three times current artisanal production.

dles or sails. However, as many as half of the non-motorized pirogues are very small craft operating off beaches on the Casamance River and contributing an insignificant share of the total artisanal catch. Thus, it seems reasonable to concur with FAO findings that only 4,500 to 5,000 pirogues were actively fishing along the Senegalese coast in the mid-1970's, of which approximately 3,500 had been motorized. The Government intends to equip an additional 1,600 pirogues with motors by the end of the Fifth Plan period.

Social and Institutional Setting

The artisanal maritime catch is landed on beaches all along Senegal's 700 km coastline and adjoining river basins, from Saint Louis to the Lower Casamance. However, landing sites in Thies and Cap Vert account for nearly 90 percent of the total production (Exhibit 4.24). Most fishing villages in these two regions were settled by members of the Lebou and Wolof ethnic groups. The typical Lebou or Wolof small-scale fisherman also engages in farming, cultivating fields of millet and groundnuts during the rainy season. In recent years, many coastal families have begun to derive income from dry season commercial vegetable production as well.

Traditionally, artisanal fishing was a family enterprise with boats owned by heads of household and crews composed almost entirely of family members. But with the advent of other income-generating opportunities such as vegetable gardening, and improvements in transportation facilitating the migration of seasonal workers to coastal communities, many operators have begun to depend on outsiders to complete their crews. Because fishing is a seasonal activity, and the season varies from north to south, some of these workers are able to find close to year-round employment as they follow the fish migrations up and down the coast.

A 1965 socioeconomic study of Kayar, a village about 60 km north of Dakar and an important center for artisanal fishing, describes patterns which are thought to be typical of most fishing villages in Thies and Cap

Exhibit 4.24

Estimated Composition of 1976 Artisanal Maritime Catch
By Region of Landing and Species 1/

	Volume (tons)	Share (percent)
Region of Landing		
Fleuve	5,000	4.0
Thies	90,000	69.0
Cap Vert	24,000	18.5
Sine-Saloum	3,000	2.5
Casamance	8,000	6.0
Total	130,000	100.0
Species		
Sardinella	35,100	27.0
Ethmalosa	14,300	11.0
Other Pelagic	32,500	25.0
Epinephelus	6,500	5.0
Pagrus	6,500	5.0
Mullet	6,500	5.0
Otolithus	9,100	7.0
Shrimp and Oyster	2,100	1.6
Other Demersal	17,400	13.4
Total	130,000	100.0

1/ Data are derived from FAO estimates based on results of surveys conducted by ORSTOM and FAO. They differ considerably, both in terms of total volume and regional share, from statistics reported in official government publications.

Source: Aubray, op. cit.

Vert.31/ There the fishing season runs from January through June, peaking in late March, April, and May. During these months, Kayar's year-round population of 2,000 swells to 10,000 with migrants attracted from many parts of Senegal by the economic activity associated with the fishing industry. Although this influx, coupled with improvements in road transportation between Kayar and Dakar, has exposed the villagers to many outside influences, the researcher found that these influences had surprisingly little impact on production practices or the traditional way of life.

At the time of the study, Kayar was made up of over 100 family concessions, each of which was a separate unit of production dependent both on fishing and on agriculture. The average concession had three to four of its members involved in fishing, and 12 or more in other occupations. Women were responsible for raising vegetables and processing the fish. Most of the men stopped fishing before the age of 45 to devote their time to farming.

Starting in the early 1970's, the Government began to promote the organization of artisanal fishermen into village-level cooperatives. By 1976, about 15 percent of the small-scale fishing population were members of cooperative associations, through which they could obtain equipment and commercial inputs such as gasoline and oil for their boats. In the long run, it is intended that these cooperatives will also perform a marketing function on their members' behalf. Responsibility for assisting the cooperative movement rests with SODEPA (Société pour le Développment de la Pêche Artisanale), which was established by the Directorate of Fisheries in 1975.

31/ Van Chi, Regine Nguyen, L'Economie Maritime et Rurale de Kayar, Village Sénégalaise--Problèmes de Développement, IFAN, Dakar (1967).

System Methods, Costs, and Energy Requirements

Production

The artisanal maritime fishing catch typically includes sardinellas, ethmalosa, and other pelagic fish, along with demersal species such as mullet, pagrus, and small amounts of shellfish and mullusks (Exhibit 4.24). The most commonly used fishing gear are nylon gill nets and hand and bottom lines. Beach seining is practiced in some coastal villages, particularly during the summer months, and there is also special equipment for lobster and shell fishing. In the early 1970's, purse seines capable of producing four times the average catch of ordinary nets were introduced by an FAO fisheries expert with some success.32/

The pirogues vary in size from three to 14 meters, with most in the six to ten meter range. They are usually built by local skilled carpenters out of tree trunks brought in by truck from the Casamance, and are good for six to 12 years before they must be replaced. Many artisanal fishermen who own motorized pirogues also have smaller, sail-driven craft available for use when their motors are not in operating order. The 6 HP to 25 HP Japanese and U. -made engines (the majority are in the 6 HP to 8 HP range) consume a mixture of 50 parts gasoline to one part oil at a rate of about one liter per HP per hour. They are sold through the fishing cooperatives on attractive credit terms and have a working life of about three years.

The boats make between 150 and 200 daily trips in an average fishing season, seldom venturing more than seven or eight km offshore. Crews can vary in number from three to eight men or more, depending on the size of the pirogue and the power of its engine. The crew is compensated on a share basis, receiving about 50 percent of the gross revenues minus joint operating costs (fuel, oil, bait, and food). The owner of the boat pays

---

32/ A purse seine is a large net made to be set by two boats around a school of fish and so arranged that the bottom can be closed when the ends of the net are brought together.

for its maintenance, repair, and amortization out of his share of the catch.

Exhbit 4.25 presents an annual budget for a representative motorized operation utilizing a 10-meter pirogue, an 8 HP engine, and standard nylon fishing gear. The data were developed from IBRD and FAO sources and the Kayar study previously cited. They show that direct fuel costs (gas-oil and lubricants), which average $1,825 for a 175-day season, make up 46 percent of the total cost of operating the boat including food expenses. These fuel costs have been arrived at on the basis that the average motor consumes 50 liters of gas-oil per day, and that the gas-oil is sold at Government-controlled pumps at a tax-free price of $0.19/liter.33/

Assuming that this fuel consumption pattern is typical of the 3,500 motor-equipped pirogues in Senegal's artisanal fleet, annual direct fuel equirements for this segment of the industry can be estimated at 30.6 million liters of gas-oil (30 million liters of gasoline and 600,000 liters of oil), with an additional 400,000 liters being consumed in the form of grease and other lubricants. The commercial value of these fossil energy inputs at 1976 market prices amounts to nearly $6.4 million, only half of which is paid for by artisanal producers.

While the 1,000 to 1,500 sail and paddle-driven pirogues operating in Senegal's maritime waters require no direct fossil energy inputs, their average productivity is estimated at only 10 to 15 tons of fish per season, compared with an average of about 30 tons for motorized craft. This is becasue the sail and paddle boats used in Senegal are generally smaller than

---

33/ The tax rebate, which was instituted by the Government more than 15 years ago in support of its pirogue motorization program, represents about 50 percent of the (1976) retail price of gas-oil in Senegal. If artisanal fishermen were compelled to purchase fuel for their outboard motors on the open market, their operating costs would run about 40 percent higher than those shown in Exhibit 4.25 and, without a corresponding rise in the selling price of the catch, net income would decline to the point where there would be no financial incentive to fish on a motorized basis.

Exhibit 4.25

Senegal's Artisanal Maritime Fishing System

Representative Budget: Motorized Fishing Operation

Key Assumptions: 10-meter wooden pirogue; 8 HP outboard motor; standard nylon nets and lines; 175-day season; 6 crew members including owner/operator; 1976 prices

Annual Revenues		$8,100
Annual Costs		
Investment Amortization Costs		
Boat	$ 200	
Motor	200	
Fishing Gear	200	
Subtotal	600	
Operating Costs		
Fuel	1,660	
Lubricants	165	
Food	1,050	
Bait	875	
Maintenance & Repairs	250	
Subtotal	4,000	
Total Annual Costs		4,600
Net Income		$3,500
Less Crew Share		2,175
Net Return to Owner-Operator		$1,325

Notes:

Annual Revenues: Gross Sales of 30 tons @ $220/ton.

Investment Amortization Costs: Annual amortization of boat ($1,200 initial cost, 6-year working life); motor ($600 initial cost, 3-year working life); and gear ($600 initial cost, 3-year working life).

Fuel: 175 trips/season, 50 liters gas-oil/trip @ $0.19/liter tax-free

Lubricants: Grease @ 10 percent of fuel costs.

Food: Food for 6 crew members (including owner/operator) @ $1.00/day x 175 days.

Bait: 175 trips/season, 50 kgs. bait/trip @ $0.10 kg.

Maintenance & Repairs: 10 percent of initial cost of boat, motor, and gear.

Crew Share: 5 crew members (excluding owner/operator) @ $435/member/season.

Source: Checchi and Company estimates after Aubray and Van Chi, op. cit.

their motor-equipped counterparts, can accommodate fewer crew members, and are unable to travel far enough offshore to take full advantage of coastal movements of pelagic fish resources.

Both the fuel energy requirements and the gross output of the artisanal maritime fleet can be expected to increase during the period of the Fifth Plan as the pirogue motorization program proceeds. The UNDP and FAO have also been experimenting with new types of artisanal craft which could have energy-related consequences. If these experiments prove successful, the traditional wooden dugout could eventually be replaced by canoes made of plywood, fiberglass, or ferro-cement equipped with insulated ice holds and inboard diesel engines in the 35 to 130 HP range.

Processing

A variety of traditional processes are used in Senegal to dry and preserve any fish for which there is no fresh market, all of them involving dehydration of the fish in order to prolong its shelf life without refrigeration. Although processing accounts for under 20 percent of the total artisanal maritime catch, it is an important source of income for women living in coastal villages where the fish are brought to shore. It also provides a means by which residents of inland cities and villages that are not served by the existing fresh fish distribution network can include fish protein in their diets. However, fish that have been dried for preservation are often lower in nutritional quality than fresh fish, for reasons which include unsanitary processing techniques and parasitic infestation.

Guedj, Ketiakh, Metorah, and salt-dried (salé-seche) fish are among the principal processed products (Exhibit 4.26). Ketiakh is a braised-dried specialty of the Thies Region which is prepared by roasting the fish between layers of straw and groundnut husks, then drying them in the sun. Metorah is produced in the Casamance and Sine Saloum by smoking the fish in specially-made huts over mangrove wood, followed also by sun-drying. In

the area around Saint Louis, salt-dried products are prepared by placing sharks in barrels of brine for eight days before they are laid out to dry.

Exhibit 4.26

Processes Used in Preservation of Artisanal Maritime Catch

Processes	Principal Product	1976 Production Volume (tons)	1976 Production Share (%)
Braised/Dried	Ketiakh	8,900	38.0
Smoked/Dried	Metorah	1,900	8.0
Fermented/Dried	Guedj	10,100	43.0
Salted/Dried and Others	Sale-Seche	2,500	11.0
Total		23,400	100.0

Source: Aubray, op. cit. Production volume is expressed in freshweight equivalents.

Along with any local or regional specialties, nearly all coastal fishing villages in Senegal prepare a dried-fermented product called Guedj, utilizing one of two alternative techniques. By one technique, the fish are first cleaned, eviscerated, and washed in salt water, then sliced in half longitudinally, salted, and stacked in the shade for two days. On the third day, they are placed in the sun and, while drying, are sprayed with red oil, re-salted, and turned once very four hours. On the fourth day, they are ready for packaging in 40 kg sacks. The other technique involves first putting the fish in cement vats filled with sea water for two or three days, after which they are cleaned, eviscerated, salted, oiled, and dried on mats or racks in the sun. Ten kgs of fresh fish produce about

three kgs of Guedj under favorable conditions. No information is available concerning the disposition of processing wastes, although it is understood that Senegal's Institut de Technologie Alimentaire (ITA) is conducting research on the use of fish wastes as a protein supplement in cattle feeds.

Regardless of the processing technique employed, the extensive handling and rather lengthy drying period expose the fish to insects and bacteria. The natural sun-drying methods produce insufficient heat to kill these organisms, which are left alive to consume the flesh of the fish even after it has been preserved. Resulting weight losses are reported to exceed 20 percent (exclusive of cleaning and water losses), with consequent nutritional energy and income losses of a similar magnitude. Continuing deterioration of processed fish products also limits their storage life in most cases to a maximum of six months.

Except for the groundnut husks, straw, and firewood34/ used to braise or smoke certain regional products, the drying and preservation of the artisanal fishing catch require no fuel energy inputs. In general, the only indirect energy costs are those associated with the purchase of salt, oil, and packaging materials. However, the Fifth Plan includes a project for the introduction of improved drying equipment, such as racks and ovens, which could add to processing costs. Drying racks are already in use in some villages on the coast, and the IPM (Institut Physique et Météorologique) and ITA are experimenting with a prototype of a solar fish dryer which can handle up to 250 kg of fish in 48 hours at temperatures sufficient to kill invading insects and bacteria.

Distribution

The distribution system for both fresh and processed fish is the province of numerous small-scale entrepreneurs and, between village producer

---

33/ A 1972 survey of fuelwood consumption in Niger found that approximately 3.25 tons of firewood were required to smoke one ton of fish (T.C. DelWaulle et Y. Roederer, "Le bois de fers a Niamey" in Bois et Forêts des Tropiques, 152:15-60).

and urban consumer, there may be as many as four Senegalese middlemen involved. As a result, retail fish prices paid in major urban markets like Dakar are often two to four times higher than those received by the fisherman at the landing site, depending on such factors as the size and species of the fish, and the season, day, and hour of sale.

According to FAO estimates, about 30 percent of the artisanal fishing catch is sold and consumed fresh within the region of production, and another 45 percent is transported inter-regionally, particularly to Dakar. Most processed fish products are also taken to Dakar, Kaolack, Rufisque, and other urban centers, where they may be resold to traders serving interior villages and towns. In all, it is estimated that about 65 percent of the total catch (85,000 tons freshweight in 1976 35/) requires some form of commercial transportation as it moves through the distribution network.

Fish destined for urban markets are first sold to a local village trader, or bana-bana. Once he has purchased his daily quota, the trader may arrange with others of his calling to share the cost of renting a three-ton truck or, alternatively, he may lease the truck and sublease space to others. The fish are packed in layers in the truck, with blocks of ice to retard spoilage during transport. Each trader is responsible for obtaining enough ice to protect his share of the load. In the Kayar study referenced above, the researcher reported a preference on the part of the bana-banas for ice brought into the village from Dakar because, while it was considerably more expensive than the locally-made product, it had been frozen at lower temperatures and consequently did not melt down as quickly.

Some of the larger traders have their own delivery trucks, and there are also small part-time traders (usually women) who handle only two or three baskets of fresh or processed fish at a time and travel by car rapide

---

35/ This figure declines to 70,000 tons when allowance is made for a 75 percent reduction in weight of the 20,000 tons of dehydrated fish that are processed for sale outside the fishing villages.

or taxi rather than by truck. There are no established delivery circuits. At the peak of the fishing season, traders may take their fish to cities 200 km away in order to sell them at a higher price, whereas during the off-season, when competition is less severe, they tend to travel shorter distances so as to reduce transport costs and maximize their profits.

When the cargo arrives at its destination, it is resold to a second group of bana-banas, who may in turn sell it to local retailers. Between the time when the fish is brought to shore in the early evening and put on sale to the consumer the morning of the following day, a minimum of ten hours have passed, the fish has changed hands three or four times, and the ice used to maintain freshness has deteriorated. The result is considerable spoilage, particularly of fish that are stored overnight at the bottom of the trucks.

Efforts to improve the fresh fish distribution system, while at the same time reducing the power of the bana-bana middlemen, have been underway in Senegal for several years. The Canadians, through CIDA, are helping to finance an improvement program which will eventually include eight marketing centers, three ice plants with a capacity of nine tons/day, 30 semi-refrigerated trucks, and 20 cold storage facilities. The local producers cooperatives are to be given responsibility for transporting the fish to these centers, from where they will be distributed directly to both inland and coastal retail markets.

Once these facilities are in place, there will undoubtedly be an increase in the amount of fossil fuel energy required to bring the artisanal fishing catch to market. Some energy savings may result, on the other hand, from the expected rationalization of the fish transport system to eliminate half-loads and one-way hauls. At the present time, the amount of fuel needed to move one ton of fresh fish an average distance of 100 km is estimated at 18 liters, based on the assumption that each truck carries

about 1.5 tons of fish in addition to ice and passengers.36/ Oil consumption would run about 0.18 liters under these same conditions. Further assuming that these estimates apply to 70,000 tons of fish in a typical year (65,000 tons of fresh fish plus 5,000 tons of processed product), total demand would come to 1.26 million liters of gasoline and 12,600 liters of oil, valued at about $500,000 in 1976 market prices. The other major requirement for energy is for the production of an estimated 50,000 tons of ice per year. A 1976 IBRD feasibility study of a proposed ice plant in Djifer, Senegal, estimates this consumption at 55 kwh of electricity per ton, at an average cost of $0.10 per kwh. On this basis, 2.75 million kwh, costing $275,000, would be needed to produce 50,000 tons of ice.

Energy Input-Product Output Summary

Exhibit 4.27 and supporting Reference Tables 4.27A and 4.27B show the flow of Senegal's artisanal maritime fishing catch through the production, processing, and distribution system, and the types and amounts of energy inputs utilized therein. The data have been drawn from information presented in previous sections of this chapter, including FAO estimates of the volume and disposition of production in 1976.

The input columns of Tables 4.27A and 4.27B give the annual utilization of fuel energy by system activity, on an aggregate and per ton of product output basis. Total system requirements amount to an estimated 32,272,600 liters of liquid fuels (gasoline, oils, and lubricants), 2,750,000 kwh of electricity, 6,175 tons of firewood, and an unknown quantity of groundnut husks and straw used in the processing of braised/dried fish (Ketiakh). Most of the gasoline and oil (96 percent) is needed to operate the motor-

---

36/ Transport energy data were developed from tables in Berger-Orgatec, op. cit., Volume IV-B. Per-km gasoline and oil requirements for a Renault car rapide and a 5-ton Citroen T-46 travelling on improved earth roads were averaged to obtain consumption figures for the type of vehicles currently being used for transportation of the artisanal maritime catch in Senegal.

Exhibit 4.27

SENEGAL'S ARTISANAL MARITIME FISHING SYSTEM: PRODUCT FLOW
(in '000 tons freshweight equivalent)

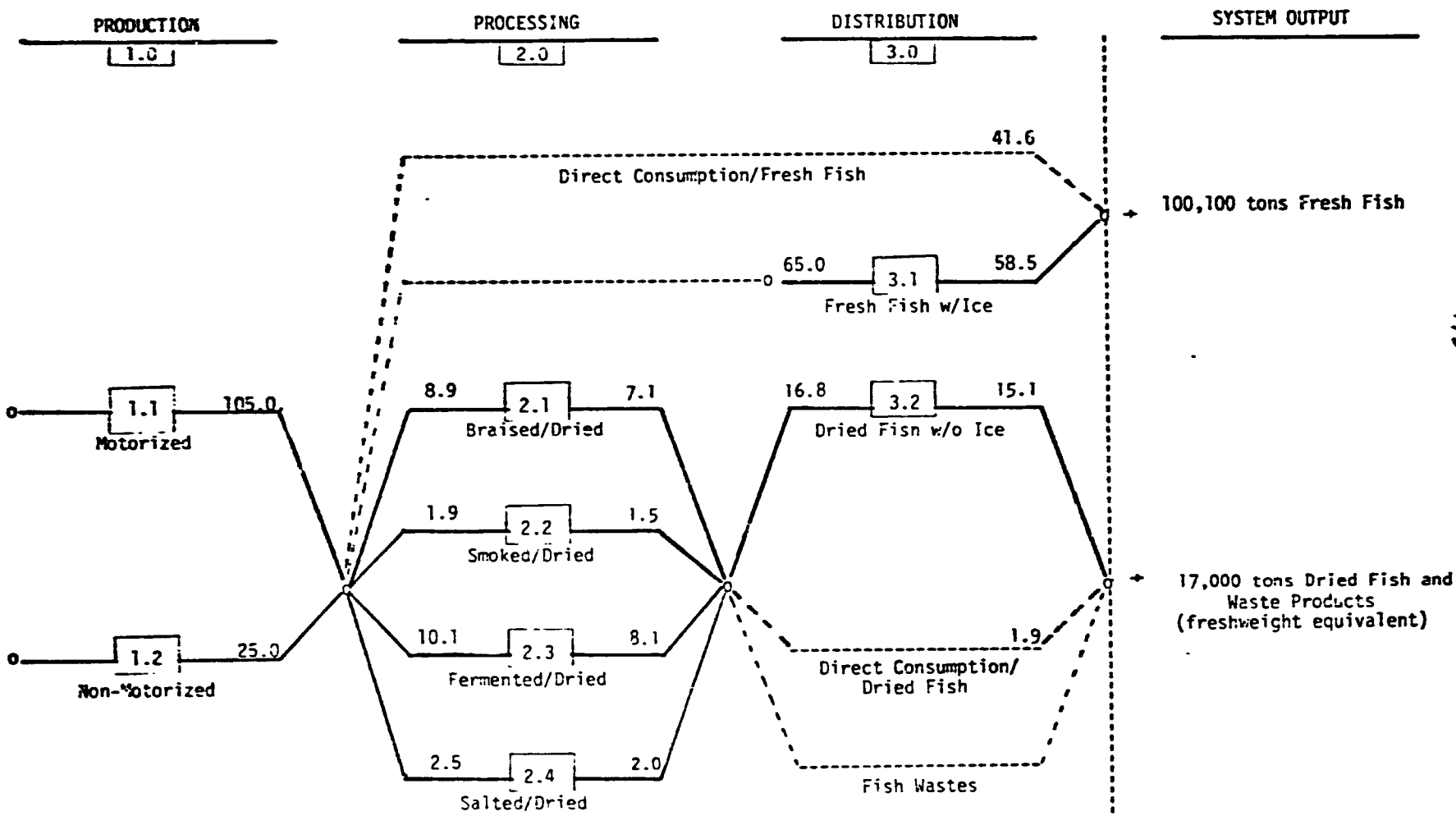

NOTE: Local sales not involving motorized transportation are included in direct consumption figures.

Table 4.27A

Senegal: Artisanal Maritime Fishing System

Total Energy Inputs, Product Losses, and Net Product Output
By System Activity and Method

Ref.	Activity (Method)	Product (Freshweight) Net Outputs (tons)	Product (Freshweight) Losses (tons)	Energy Inputs: Liquid Fuel (kl)	Energy Inputs: Electricity (kwh)	Energy Inputs: Firewood (tons)	Energy Inputs: Residues (tons)
1.0	PRODUCTION						
1.1	Motorized Fishing (outboard motor)	105,000	-	31,000.0	-	-	-
1.2	Non-Motorized Fishing (sail and paddle)	25,000	-	-	-	-	-
2.0	PROCESSING						
2.1	Braised/Dried Processing	7,100	1,800	-	-	-	n.a.
2.2	Smoked/Dried Processing	1,500	400	-	-	6,175	-
2.3	Fermented/Dried Processing	8,100	2,000	-	-	-	-
2.4	Salted/Dried Processing	2,000	500	-	-	-	-
3.0	DISTRIBUTION						
3.1	Fresh Fish Transport & Storage (gasoline pick-up; manufactured ice)	58,500	6,500	1,181.7	2,750,000	-	-
3.2	Dried Fish Transport & Storage (gasoline pick-up; no ice; six-month shelf-life at room temperature)	15,100	1,700	90.9	-	-	-
	TOTAL	117,100	12,900	32,272.6	2,750,000	6,175	n.a.

n.a. = not available

Table 4.27B

Senegal: Artisanal Maritime Fishing System

Energy Inputs and Product Losses per Ton of Output, by System Activity and Method
(in freshweight equivalent)

Ref.	Activity (Method)	Product (Freshweight)		Energy Inputs			
		Net Outputs (tons)	Losses (tons)	Liquid Fuel (liters)	Electricity (kwh)	Firewood (tons)	Residues (tons)
1.0	PRODUCTION						
1.1	Motorized Fishing (outboard motor)	1	-	295.2	-	-	-
1.2	Non-Motorized Fishing (sail and paddle)	1	-	-	-	-	-
2.0	PROCESSING						
2.1	Braised/Dried Processing	1	0.250	-	-	-	n.a.
2.2	Smoked/Dried Processing	1	0.250	-	-	4.1	-
2.3	Fermented/Dried Processing	1	0.250	-	-	-	-
2.4	Salted/Dried Processing	1	0.250	-	-	-	-
3.0	DISTRIBUTION						
3.1	Fresh Fish Transport & Storage (gasoline pick-up; manufactured ice)	1	0.111	20.2	47.0	-	-
3.2	Dried Fish Transport & Storage (gasoline pick-up; no ice; six-month shelf-life at room temperature)	1	0.111	6.9	-	-	-
	TOTAL						

n.a. = not available

ized portion of the artisanal fishing fleet. Processing, transport, and storage consume relatively small amounts of fuel energy in the aggregate, mainly in the form of electricity for ice production, gasoline for transportation, and firewood for smoking fish to make Metorah.37/

The amount of energy consumed per ton of output is a function of the fishing technology employed and the disposition of the fish after landing. At one extreme, a ton of fish brought to shore in a sail or paddle boat and retained by the fisherman for his own consumption would require virtually no fuel energy inputs; at the other extreme, a ton of fish brought in by a motorized fishing craft and subsequently transported on ice to urban markets would have accounted for the expenditure of some 315 liters of gasoline and oil and 47 kwh of electricity by the time it reached the ultimate consumer.

The output data in Exhibit 4.27 and the accompanying tables show how the artisanal maritime catch is allocated and the magnitude of losses incurred as it flows through the various stages of the artisanal system. While the losess attributed to processing and distribution are based on very rough estimates which need to be verified in the field, they have been included to underscore the nutritional impact of inadequate processing and distribution methods which may in turn suggest opportunities for intervention. These losses may also have a fuel energy cost as, for example, when a portion of the motorized fishing catch, which itself represents an expen-

---

37/ The burning of firewood for smoking fish, while not an important user of energy in the aggregate sense, raises the larger issue of declining fuelwood supplies that threatens Senegal and is a source of concern to the Senegalese Government. Like cooking and other activities requiring heat production, the smoking process is energy intensive, consuming an estimated 4.1 tons of firewood for every ton of (net) product output handled. However, not enough is known about the artisanal smoking technologies actually employed in Senegal to assess possibilities for fuel substitutes or other improvements in the process. For this reason, the reader is referred to the more general treatment of fuelwood conservation opportunities in the final section (Section F) of this chapter.

diture of direct fuel energy, it wasted due to lack of cold storage facilities, or when fish which has been smoked with firewood subsequently deteriorates as a result of insufficient drying after processing.

The data indicate that, out of a total production of 130,000 tons of fish landed by motor, sail, and paddle boats in Senegal in a typical year, only 117,100 tons are actually available for domestic consumption or alternative end uses.38/ The balance of 12,900 tons is lost as the product is transformed within the system through processing, transportation, and storage.

Energy-Related Problems and Opportunities

The preceding analysis points to at least one area within the artisanal fish production, processing, and distribution system where new uses of energy may help to reduce losses in food volume and nutritional value. This concerns the preservation of fish by artisanal methods and possible small-scale applications of energy for fish drying and for refrigeration and cooling.

Fish Preservation

Fish processing in Senegal involves not only curing (through smoking, braising, salting, or fermentation), but also sun-drying in the open air. While traditional drying methods require minimal investment in equipment and materials, they do not expose the fish to high enough temperatures to forestall deterioration. They also pose certain health hazards resulting

---

38/ In some years, Senegal exports small amounts of artisanally-processed products to neighboring West African countries. However, since these exports account for a negligible percentage of the total production, and since Senegal also imports a limited volume of dried, smoked, and salted fish (500 tons in 1975 vs. 600 tons of exports), it is assumed for purposes of analysis that the entire net output of the artisanal system is consumed domestically.

from contamination of the fish by flies and other insects which may reduce the export potential of artisanally-processed products. An estimated 4,700 tons of fish are lost each year due to insufficient drying of processed products and an additional 1,700-ton loss can be attributed to the abbreviated shelf life of products which continue to deteriorate even after they have entered the distribution system.

Lack of facilities for cooling and refrigeration of fresh fish during storage and transport accounts for further product losses, roughly estimated at 6,500 tons per year. It also puts the fisherman at the mercy of the bana-bana middleman, who knows the former has no means to retard spoilage and consequently must dispose of his catch as soon as possible at whatever price he can get. Ice-making equipment, while it exists in some of the larger fishing villages, is reportedly unable to produce deep-frozen blocks of ice. Ice brought in from Dakar and other cities is expensive and thus used sparingly by traders and producers.

Senegal's Government has begun to address these problems in the artisanal distribution system through investments in cold storage facilities and semi-refrigerated trucks. However, it is likely to be many years before these amenities reach any but the largest artisanal fishing centers, and some villages may never have sufficient production to justify the required investments.

F. COOKING

Background

The Senegalese diet is based on grains, with fish, meat, and vegetable sauces adding variety and nutrients. Except during periods of fasting (such as Ramadan) and extreme hunger, most households consume two cooked meals a day, and then reheat any leftovers for use the next morning. Basic cereals vary according to region and ethnic group, with some groups preferring certain cereals to others (the Diola in the Casamance prefer rice, for example; the urban Wolof, imported rice; and the Serer, sorghum). The grain is usually pounded into brokens (rice) or a semolina, and then steamed or boiled.

Most dishes are "one pot" dishes, and require fairly lengthy preparation and cooking times, especially if time for pounding is included. The major dishes include thieboudienne (or riz au poisson) (the national dish of rice cooked with fish, tomato paste and vegetables), bassi (a millet couscous served with sauce of vegetables, meat or fish) and lakh (boiled millet porridge eaten with curdled milk). Other dishes are variations on steamed grains (millet, sorghum, rice, maize or fonio) with sauces made of fresh or dried fish, groundnut oil, tomato paste and local vegetables. Cassava, niebe beans, and wild leaves and berries may also be used in cooking. Fresh or dried fish is the main source of protein as, in all but the wealthiest households, meat is served as a main dish only on special occasions, such as religious festivals or family celebrations.

Meals are eaten from a common pot within the family compound and are generally made to accommodate from 10 to 15 people. They are prepared in turn by the married women of the household. A recent survey of women's activities in two villages in the Groundnut Basin found that an average of 4.49 hours a day were spent cooking and cleaning up after meals, not in-

cluding time used for grinding and pounding millet (4.8 hours) and gathering firewood (1.75 hours).39/

Because rice can be prepared more quickly than millet, it is often preferred by women even if they find it difficult to buy it; in another rural village survey, 33 percent of the women who served millet to their families said that their first choice would have been rice.40/ Preference for rice seems to be linked to how long people have lived in urban areas (the newly- arrived families often preferring the more traditional millet and sorghum), ethnic group, and the price of rice in comparison to other grains. In the cities, rice is almost universally consumed at noon, while millet is often eaten in the evening.

Wood is the principal sources of energy for cooking in Senegal. In the countryside, it is usually gathered and burned directly for fuel. In areas where trees are now scarce, women and children can spend up to five hours daily collecting firewood. Wood is also taken from living trees; the lower branches are first bent down for grazing sheep and goats, then cut from the trees once the branches have died.

In urban areas, wood is most often consumed in the form of charcoal. The Government controls the price and supply of charcoal, although it is also available on the open market for those who are willing to pay a higher price.

Less frequently used cooking fuels are butane gas, kerosene, and plant and animal wastes. Butane has been exempted from taxation by the Government in an effort to encourage its use as a substitute for wood-based fuels. In terms of energy delivered, however, it is still more expensive than charcoal and firewood (see Exhibit 4.28), and it requires an investment in a gas burner stove that is beyond the means of the average Senegal-

---

39/ See Edna E. Loose, op. cit. The survey was taken during the rainy season, when women are busy in the fields and have less time available for household tasks.

40/ Yaciuk and Yaciuk, op. cit.

ese household.41/ It is also difficult to simmer rice and other foods on a gas burner in the open air, where most cooking in Senegal takes place, because the flame may be extinguished by the slightest breeze. For these and other reasons (including certain beneficial magical properties associated with charcoal use), measures to promote butane as a cooking fuel have met with only limited success. Household consumption of kerosene, which is used mainly for lighting and igniting charcoal, is also very low, averaging only three liters per year on a per capita basis.

Exhibit 4.28

Fuel Requirements and 1976 Costs per 100,000 Kilocalories, by Fuel Type

Fuel	Quantity (kg)	1976 Cost ($)
Butane Gas	8.5	3.27
Kerosene	8.7	2.00-2.68
Charcoal	14.3	1.24-1.86
Firewood	33.3	2.17-2.89

Source: United Nations, Economic Commission for Africa "Projet de rapport sur les problemes du charbon au Senegal," Addis Ababa, 1976.

41/ Even middle-class households which can afford the costs associated with butane use show a preference for charcoal. For example, a survey of Senegalese school teachers found that 95 percent of the respondents preferred charcoal for making tea, and 73 percent preferred it for general cooking purposes, to all other types of fuels. (See Floor, The Energy Sector of the Sahelian Countries, Netherlands Ministry of Foreign Affairs, April 1977).

Crop residues and livestock dung are occasionally used for cooking in rural areas where firewood is in short supply. CARITAS-Senegal recently installed a biogas plant in the village of Ndioukh-Fissel which produces methane gas for cooking from agricultural wastes, and several other proposed or ongoing R & D projects involve applications of alternative energy technologies for cooking purposes (see Chapter Three). All of these projects are still in the experimental stage, however, and no discernable effect on the behavior of the general population can be expected for some time to come.

The balance of this section will focus on the use of fuelwood (charcoal and firewood) in cooking. These fuels will be considered to the exclusion of other energy sources because they are believed to account for over 90 percent of total cooking fuel demand in Senegal at the present time, and because reducing the current rate of depletion of Senegal's forest resources is an important Government priority.

Cooking Methods, Costs, and Fuel Requirements

When firewood is used for preparing food in Senegal, it is usually placed directly under a cooking pot which rests on three stones above the ground. No devices are used to concentrate the heat generated by the fire and, as a result, much of this heat is wasted. Estimates of the thermal efficiency of wood when burned in an open fire range from three to eight percent, compared with efficiency ratings of 15 to 25 percent that can be obtained when simple woodburning stoves made of clay, baked earth, or iron sheeting are used.42/

Virtually no monetary costs are associated with the use of firewood in rural areas: brush and deadwood are gathered daily by women and children and trees are cut as required to supply fuel for household needs, which

---

42/ See Floor and CILSS/Club du Sahel, op. cit.

amount to an estimated ten kilos daily. There are, on the other hand, considerable opportunity costs in the form of human labor that might otherwise be put to more economically or socially productive uses, such as vegetable gardening or participation in maternal and child health care programs. There are also very significant environmental costs in the form of progressive deforestation of the landscape and erosion of the soil which results from overexploitation of fuelwood resources.

In the cities, firewood is sold by dealers who collect it from the surrounding countryside or bring it in by truck from forested areas of the country where trees are cut for commercial sale.43/ In 1976 in Dakar, retail firewood prices ranged between $0.06 to $0.09 per kg, compared with prices for charcoal in the $0.09 to $0.13 per kg range. However, the thermal efficiency per kg of charcoal is more than twice that of firewood, making it the cheaper of the two fuels for urban consumers who do not have access to the "free" brush and timber that is available for the taking in rural areas. Charcoal also burns cleaner than wood and is less expensive to ship.

Households that rely on charcoal for preparing food must also invest in a simple charcoal stove (fourneau malagache) which sells for about $2.50 and is crafted from tin by local blacksmiths. The malagache stove has a tapering funnel shape and rests on a rectangular airbox; coals are placed in the bottom of the funnel, and the cooking pot sits on a grill above the stove. Approximately four kilos of charcoal are needed per household per day.

Most of the charcoal used by households in Dakar is produced 200-400 km away in the Casamance, Senegal Oriental, Sine Saloum, and Fleuve. The

---

43/ These operations are controlled by the Forest Service which licenses professional woodcutters, sets an annual quota on production, and levies a tax on sales. Authorized sales of firewood amounted to about 86,000 stacked cubic meters (steres) in 1978, less than three percent of estimated domestic firewood consumption.

production and marketing of charcoal, like firewood, is regulated by the Forest Service through a system of licensing, quotas, and taxation. In recent years, production quotas have been set at progressively lower levels in an effort to discourage fuelwood use and some enterprises, such as urban bakeries, have been prohibited from burning either firewood or charcoal in their ovens. Precise data on charcoal consumption in Senegal are not available. Nevertheless, according to the Forest Service, production substantially exceeds the annual quota which, for 1979, was set at 81,000 tons. Some of the unauthorized output is smuggled across the Senegal River into Mauretania and some remains within the region of production. There are also illegal markets for charcoal operating in Dakar and other cities.

Charcoal processing in Senegal is usually done by traditional methods, in which the wood is slowly burned for about ten days in an earthen kiln covered with straw and clay.44/ Eight to ten kilos of wood are required to produce one kilo of charcoal with an estimated 12 to 18 percent combustion yield. After cooling, the charcoal is packed in jute bags and distributed to wholesalers. For various reasons (including impassable roads and the involvement of charcoal workers in agricultural pursuits), charcoal supplies usually decline during the rainy season, with the result that urban consumers may have to pay higher prices on the illegal market or resort to alternative cooking fuels.

Fuel Requirments Summary and Projections

Per capita fuelwood consumption in Senegal and other Sahelian countries has been variously estimated at from 0.5 to 1.5 cubic meters per year. In its 1978 study of the Sahelian energy situation, the CILSS/Club du Sahel adopted an estimate of 0.6 cubic meters per capita which, in the case of Senegal with a population of about 5.2 million, would amount to a

---

44/ Metal kilns were reportedly used by one group of charcoal producers for a brief period in the early 1970's, but were subsequently abandoned due to their high investment costs.

total consumption on the order of 3 million cubic meters, or about 2.25 million tons, of wood per year. While some of this wood is utilized in smoking fish, brewing beer, firing bricks, and other artisanal processes, by far the largest amount (perhaps 90 percent) is consumed in cooking food. Daily per capita cooking fuel requirements in wood equivalents range from under one kilo in rural areas where firewood is used, to as much as four kilos in Dakar where charcoal is the principal fuel.

The CILSS/Club du Sahel study goes on to predict a doubling of fuelwood consumption in Senegal by the year 2000, with two-thirds of the expected growth attributed to urban areas (Exhibit 4.29). According to the authors of the study, this projected rate of consumption will far exceed the regenerative capacity of the country's forest resources with the result that serious depletion will take place unless remedial steps are taken.

Exhibit 4.29

Senegal: Projected Growth in Fuelwood Consumption, 1975-2000

Sector	1975 (m^3)	2000 (m^3)	Increase (percent)
Rural	1,900,000	3,000,000	57.9
Urban	1,000,000	2,900,000	290.0
Total	2,900,000	5,900,000	103.4

Source: CILSS/Club du Sahel, op. cit.

Energy-Related Problems and Opportunities

There is widespread agreement on the part of the Government of Senegal and others who have studied the problem that the so-called fuelwood crisis is cause for serious concern. Most sources also agree that there may be limited opportunities to promote the use of butane, kerosene, or even solar energy as a substitute for fuelwood; however, firewood, charcoal, and to a lesser extent other forms of biomass will continue to be the principal sources of cooking fuel in Senegal for the foreseeable future. Thus solutions need to be found that will reduce fuelwood demand through improvements in the processes by which wood and other forms of biomass are converted to useful heat and/or increase fuelwood supply through large-scale reforestation programs.

Fuelwood Demand

There are several areas where traditional fuel conversion methods used in Senegal are inefficient from an energy perspective. One is the process by which wood is carbonized to produce charcoal; energy yields reportedly average between 12 and 13 percent, compared with yields of 30 percent or higher than can be achieved using improved kiln designs. Another is the method by which firewood is burned for cooking food; when the cooking pot is placed directly over an open hearth, only three to eight percent of the energy produced by the fire is transferred as useful heat. If this combustion yield could be increased to between 15 and 25 percent, as has been found to be obtainable when simple stoves are used, per capita demand for firewood in Senegal would be reduced by at least one-half.

There may also be scope for comparable improvements in the heat transfer efficiency of crop residues that are sometimes utilized in cooking, even though some specialists contend that it is better to return these residues to the soil than to burn them up for fuel. However, while this contention may hold true for wastes which remain in the field after harvest or

are otherwise retained on-farm, it may not hold true either in the case of groundnut shells for reasons discussed earlier in this chapter (See Section D) or in the case where wastes are collected and used to make methane gas through processes producing high- grade sludge fertilizer as a by-product.

Fuelwood Supply

Fuelwood consumption in Senegal, estimated at three million cubic meters per year in the mid-1970's, is projected to double by the end of the century on the basis of current patterns of use. Just to supply this incremental demand of three million cubic meters annually, between 250,000 and one million hectares of new forest area would need to be planted and maintained.45/ One million hectares is more than ten times the amount of land devoted to rice cultivation in Senegal, about 90 percent of the amount of land planted in groundnuts, the country's main cash crop, and nearly 700 times the amount of land reached by Senegal's reforestation program in 1977. These comparisons are cited to point up the enormity of the task of reforestation, as well as some of the principal trade-offs involved. Nevertheless, the recommendation of the CILSS/Club du Sahel study that "every Sahel country should view reforestation as its first national priority, ranking as high as self-sufficiency in food" argues in favor of a continuing effort to address this problem area.

45/ The FAO estimates that one hectare of forest plantation can produce between 4m3 and 12m3 of fuelwood per year, depending on species, rainfall, and soil conditions. The Club du Sahel used a range of 3m3 to 6m3 for annual yields per hectare of non-irrigated forest on average soil. However, neither source makes allowance for destruction by brush fires or drought which in the past have been responsible for significant losses of forest reserves in Senegal.

INTENTIONALLY
LEFT
BLANK

Chapter Five

POTENTIAL AREAS OF CONCENTRATION

Identification and Evaluation Procedures

At the conclusion of each profile analysis in Chapter Four, problems and/or opportunities related to the use of energy were identified and briefly discussed. Based on these discussions, ten "areas of concentration," representing potential focal points for energy-related project design activities, have been defined and evaluated in terms of the following criteria: energy impact; development impact; implementability; and uniqueness of U.S. role. The results of this assessment are summarized in Exhibit 5.1 which divides the areas into two groups of higher and lower priority in accordance with their criteria ratings. Further information on the evaluation criteria is provided in Exhibit 5.2.

Recommended Areas of Concentration

The five potential areas of concentration receiving high overall ratings are examined in some detail below. Each section begins with a presentation of pertinent background information about the current situation. This is followed by a summary of related ongoing projects and research activities. Some preliminary suggestions for future work in the area are then provided, with the understanding that, in each case, further work is required to arrive at specific project designs. Each section concludes with an explanation of the ratings assigned that area of concentration according to the evaluation criteria.

Exhibit 5.1

POTENTIAL AREAS OF CONCENTRATION:
EVALUATION SURVEY

Potential Areas	Rating 2/			
	Energy Impact	Development Impact	Implement-ability	U.S. Role
High Priority Areas 1/				
Fish Preservation	H	H	M	M
Fuelwood Production	H	H	M	M
Fertilizer Production and Use	M	H	M	H
Water Pumping	M	H	M	M
Cooking Methods and Equipment	M	M	M	M
Lower Priority Areas				
Household-level Grain Storage	M	H	M	L
Aflatoxin Control	L	M	M	H
Groundnut Shell Utilization	M	M	L	M
Small Mechanical Millet Processing	L	M	M	M
Small Mechanical Rice Milling	M	M	M	M

1/ High Priority Areas are those receiving High (H) ratings for energy and/or development impact and no Low (L) ratings.

2/ H = High; M = Moderate; L = Low.

Exhibit 5.2

EVALUATION CRITERIA USED TO ASSESS POTENTIAL AREAS OF CONCENTRATION

EVALUATION CRITERIA[1/]

1. Energy Impact

   a. Energy savings through increased efficiency of energy conversion technologies (i.e., more efficient charcoal or wood-burning stoves).

   b. Achievement of a more desirable fuel input mix (i.e., photovoltaics in lieu of diesel fuel for pumping water).

   c. Increases in product output (or reduction in product losses) through the judicious use of additional energy (i.e., increased levels of fertilizer use to attain higher levels of energy productivity).

2. Development Impact

   a. Promotion of long-term economic growth. Implicit in this objective is the recognition that rising prices and impending shortages of conventional fuels place a premium on the development and use of renewable (non-conventional) energy sources.

   b. Benefits to target groups, including the rural poor and women.

3. Implementability

   a. Existence of adequate management infrastructure and technological and entrepreneurial skills to support program implementation.

   b. Absence of any strong institutional or social obstacles which could limit prospects for absorption of new technologies or practices at the local level.

4. Uniqueness of U.S. Role

   a. Existence within the U.S. of the appropriate technical knowledge, manpower resources, and related capabilities needed to develop and implement the program, such as access to advanced conversion technologies and transmisstion systems or the requisite organizational development skills. A high score is given only where the U.S. has a demonstrated record of performance superior to that of other donor countries or institutions.

   b. An identified need for support from development assistance institutions (i.e., a program which can be carried out by the private sector is not considered to be a candidate for U.S. support).

1/ Adapted from P. F. Palmedo, et al., "Programmatic Areas for U.S. Assistance for Energy in the Developing Countries," BNL 50890 (December 1978), Brookhaven National Laboratory, Upton, New York.

Fish Preservation

Current Situation

Fish caught by the artisanal fishing fleet in Senegal's coastal waters are usually landed on the beaches twice a day -- in late morning and again in late afternoon. Because there are no cold storage and refrigeration facilities in most rural fishing villages, that portion of the catch which is not consumed locally must either be sold to traders and transported to urban fresh fish markets or cured and dried for future sale. Saltwater fish are subject to rapid decomposition, which may begin even before the catch has been brought to shore and proceeds quickly in the case of fish that are left on the beaches overnight.

Approximately half of the artisanal maritime fishing catch (which totalled 130,000 tons in 1976) is turned over on landing to traders for resale outside the region of production. Ice is used to preserve the fish during transportation over distances of up to 200 km. However, what local ice-making equipment exists is reportedly unable to produce deep-frozen blocks of ice, and ice brought in to the fishing villages from Dakar and other cities is expensive and thus is used sparingly by traders. This, coupled with the fact the fish must often be stored overnight in trucks upon arrival at their destination, results in unnecessarily high losses, roughly estimated at 6,500 tons per year. A related problem is that the need to dispose of his catch as quickly as possible puts the fisherman at the trader's mercy for, without a means of retarding spoilage, he is usually willing to accept whatever price he can get.

On days when the supply of fresh fish exceeds the demand, the surplus is cured by one of several artisanal processes and then sundried in the open air. These traditional procedures produce either dried, salted, smoked or fermented-dried fish, each of which has a definite place in the Senegalese diet. Although fish drying racks were introduced in many villages in the 1960's and their use is now relatively widespread, the presenr methods of drying are still unhygienic and result in large losses of fish.

The bulk of these losses result from infestation of the fish by insects. Flies lay their eggs either directly on the exposed fish or in a nearby wet spot, such as a damp wooden plank or a moist patch of earth. The eggs develop into larvae, which become "dermestes" within 48 hours. These then feed on the flesh of the fish. The current drying techniques do not produce temperatures high enough to kill the "dermestes" and the losses, which depend on the length of time the fish remains in storage, are estimated to be on the order of 25 percent of the freshweight of all fish processed by artisanal methods in Senegal, or 6,400 tons per year. Some of these losses are due to the abbreviated shelf life of processed fish, which become too badly decomposed to sell after a period of from three to six months and consequently must be discarded.

Exposure of the fish to insects (especially flies) and dust permitted by traditional drying methods also poses certain health hazards which may reduce the export potential of dried fish products. Another problem associated with traditional processing techniques is that the fish are often cleaned right on the beach and the offal is left behind to foul the environment and create breeding grounds for insects.

In all, the losses attributable to inadequate fish conservation (drying and refrigeration) techniques amount to nearly ten percent of the total artisanal maritime catch, with nutritional energy and rural income losses of a comparable magnitude. It is expected that an equally high rate of loss can be applied to Senegal's inland fisheries production, which is generally handled in the same manner as the maritime catch.

Ongoing Projects and Research Activities

Fish drying racks were introduced in many villages in the 1960's and their use is now relatively widespread. These racks are designed to provide for better air circulation than the traditional method of spreading the fish out on the ground, and also help to reduce contamination of the fish by dust and insects.

Canada (CIDA) is helping to fund an $18 million marketing improvement program in an effort to revitalize the artisanal fishing cooperative system. This program may eventually include eight marketing centers, three ice plants, a fleet of 30 semi-refrigerated trucks, and 20 cold storage facilities.

Collaboration between ITA (Institut de Technologie Alimentaire) and IPM (Institut Physique Météorologique) has produced a solar fish dryer which can handle up to 250 kg of fish in a 48-hour period. Glass-covered solar flat plate collectors are used to heat air. The air then rises into an insulated vertical chamber where the fish are kept on racks and escapes through a regulated outlet at the top of the chamber. The temperatures achieved are high enough to kill bacteria and insect eggs and larvae within three hours. The prototype has a 8 m2 solar panel, although a larger model with a 20 m2 solar panel has since been built by IPM. The IPM dryer is constructed out of relatively lightweight porous concrete blocks.

ITA has conducted other experiments designed to improve fish drying and storage procedures. A drying and storage tent, consisting of a metal or wooden frame covered with polyethelene (one side of which is transparent and the other black), has been developed which can produce temperatures of up to 56°C -- more than adequate to kill any insects or bacteria that have invaded the fish prior to drying. However, insects and dust can still enter the tent from the bottom where the plastic meets the ground and thus reinfest the fish during storage. In another ITA experiment, dried fish were immersed in a pyrethrum solution (approximately two percent) in an effort to kill any remaining insect larvae and prevent reinfestation. However, the effects of this practice on the health of dried fish consumers have yet to be studied.

ITA is now in the process of obtaining funds for new buildings and equipment which will facilitate its research on fish preservation. Future plans in this area include the development of processes to produce canned fish products for the Senegalese market.

Possibilities for Further Work

Possibilities for further work in the area of fish preservation include: (1) continued testing and improvements in existing versions of the ITA/IPM solar dryer and the ITA drying and storage tent, the latter oriented toward the development of a storage chamber capable of sustaining sufficiently-high temperatures to prevent reinfestation; (2) development and dissemination of improved ice-making and solar-powered cold storage technologies to supplement, support, or possibly even replace some of the facilities planned in conjunction with the Government's fish marketing improvement program; (3) continued research on the use of chemicals for the preservation of dried fish products; and (4) exploring a possible potential for using fish wastes (which now foul the beaches and provide breeding grounds for insects) for biogas conversion. This could generate electricity to light the processing areas after dark, thereby permitting the processors to handle more fish before decomposition sets in.

Rating

Energy Impact - High. In light of the fact that 80 percent of Senegal's artisanal fishing fleet has been motorized, and since motorized fishing accounts for the great majority of all commercial fuels used within the food system, the energy impact of any program in this area would be high. If losses, which now amount to an estimated ten percent of the total artisanal catch, could be virtually eliminated through the introduction of better drying and refrigeration methods, the net product output:fuel energy input ratio for this aspect of the food system would be considerably improved.

Development Impact - High. The development impact of measures designed to improve artisanal fish preservation methods would also be high. Fish is the most important source of animal protein in the Senegalese diet, and most fish consumed in Senegal are caught by the artisanal fleet. This segment of the fishing industry employs 30,000 to 40,000 individuals on a full or part-time basis, and also generates work for many rural villagers

-- including large numbers of women who are engaged in processing and marketing the catch. Any reduction in losses brought about by improvements in preservation methods would redound to the benefit of these people who derive income directly or indirectly from fishing, as well as to the economy as a whole.

Implementability - Moderate. Implementation prospects will greatly depend upon the receptivity to innovation of the powerful commercial interests that control Senegal's fishing sector. There is also some uncertainty about the ability of prevailing pricing structures to accommodate any increase in processing costs associated with the use of commercial equipment and materials. For these reasons, the implementability of programs in this area is rated as moderate.

U.S. Role - Moderate. A moderate rating is given with respect to this criterion because, while the United States has the requisite technological capabilities, it has limited experience in working with small entrepreneurs and cooperatives in Senegal's fishing sector.

Fuelwood Production

Current Situation

Over the years, Senegal's forest resources have been seriously depleted due to the combined effects of uncontrolled cutting, brush and forest fires, overgrazing, neglect, and prolonged periods of drought. The 1968-73 drought took an especially heavy toll in the northern part of the country, where it virtually destroyed the regenerative capacity of the remaining forest areas. Unfortunately, while the phenomenon of deforestation has been observed in Senegal and throughout the West African Sahel, the relative importance of the various factors which contribute to this phenomenon are not well understood.

Firewood and charcoal remain the principal sources of energy for cooking food in Senegal, despite Government efforts to discourage the use of both these fuels. Annual commercial production quotas, which are set by the Forest Service (under the Direction des Eaux et Forêts), are being progressively reduced and formerly important industrial consumers, such as bakeries in large towns, are now prohibited from using fuelwood in their ovens. In an attempt to shift urban household demand from charcoal to butane, a five-year "Butanization Program" was launched in 1974 which entitled purchasers of butane burners and gas bottles to tax exonerations and subsidies. The results have been disappointing, however, and the program was not expected to be renewed after 1979.

No data are available on actual fuelwood consumption levels in Senegal, although an estimate of 0.6 cubic meters per person per year has been used by the Club du Sahel and other sources. While the marketing of charcoal and firewood in urban areas is at least partially monitored by the Government, there is little if any control on the cutting of trees for fuel by rural households. There is some illegal woodcutting in the forest preserves, even though villagers are permitted to gather whatever deadwood they can find. It is also common practice for villagers to bend down the

branches of small trees and scrub for livestock to graze on; once stripped of leaves, the branches die and are cut for firewood.

The official production estimate for charcoal in 1978 was about 84,000 tons, against a 81,000-ton quota. The Fleuve, Casamance, and Senegal Oriental are the principal production regions. Charcoal producers must be licensed by the Government and pay a tax of about $0.65 (150 Francs CFA) on every 100 kg they market. In the Casamance, charcoal is made by the Peul (Fula) from Guinea, who work on an extended family basis. Some 25 producers cooperatives have been established, but the progress of the cooperative movement has been slowed by difficulties involved in obtaining financing needed for expansion.

Traditional wood carbonization techniques involve the use of a simple earthen kiln of up to 20 meters in diameter. Earth is shaped into a slight mound before the wood is piled up, so that the tar can run off the sides. The wood is then covered with straw and clay, and openings are made at the top and base of the kiln to permit some air circulation. While most of the wood gets carbonized, some is only partially burned and requires refiring. The efficiency of this conversion process has been estimated at between 12 and 18 percent.

Ongoing Projects and Research Activities

Various programs are underway in Senegal to protect and enhance the country's remaining forest resources. FAC and the World Bank are financing reforestation and forest management projects involving a total of 48,000 ha in Sine Saloum in an effort to replenish wood reserves in that region and allow for their judicious exploitation. AID is engaged in a greenbelt-fuelwood production project on the outskirts of Thies. Other forestry projects being sponsored by development assistance agencies and carried out by the Direction des Eaux et Forêts include a German-funded effort to plant trees for livestock browsing in the sylvo-pastoral zone, FAC experiments in irrigated tree production in the Senegal River Valley, and a CIDA-financed

project to replenish stocks of gum trees killed by the most recent drought in northern Senegal. Canada, the World Bank, and the World Food Programme (WFP) are also supporting projects in forest fire control. In the past, the effectiveness of fire control activities has been limited by a lack of recurrent financing for maintenance and spare parts, with the result that 50 percent of the equipment is currently out of service. The WFP is seeking to address this problem by organizing and equipping local fire fighting teams (Comites pour la lutte contre les feus de brousse) so that they will be ready to go to work on short notice.

The need to improve the efficiency of charcoal production techniques has also been recognized by the Government of Senegal and foreign donors. The FAO and UNDP have underwritten a project in the Casamance which involves experimentation with improved methods of making charcoal. A Peace Corps Volunteer assigned to the project has developed and tested a modified version of the traditional earthen kiln incorporating a portable metal stack placed near the center of the kiln. The use of the chimney reportedly improves combustion yields to 25 percent and also permits more even firing of the wood. The stack is made from three oil drums and is welded onto a large flat box on the bottom for better air intake. It can be welded together by a local mechanic at a cost of $75 or less, making it better suited to small-scale family charcoal-making operations that the more expensive ($1,000 plus) models made from steel containers that the Government tried, unsuccessfully, to introduce in the early 1970's.

The Forest Service hopes to train charcoal producers in the use of this modified earthen kiln at centers which would be set up in the Casamance, Fleuve, and Sine-Saloum. A reorganization of the charcoal industry (both manufacture and distribution) is also planned as a means of gaining better regulatory control over the use of Senegal's forest resources. Expansion of the cooperative movement is seen as one way to gaining such control.

Possibilities for Further Work

Possibilities for further work in the area of wood and charcoal production include: (1) refinement and promotion of low-cost, improved wood carbonization techniques, particularly those offering combustion efficiencies in excess of 25 percent; (2) implementation of plans to reorganize the charcoal industry; and (3) extension of reforestation and forest management efforts to regions of the country not being reached by ongoing forestry projects. In this last regard, the enormity of the deforestation problem suggests that massive inputs of money and manpower will be required to save and enhance Senegal's forest resources for future generations.

Rating

Energy Impact - High. Wood is the principal source of fuel energy in Senegal, particularly in rural areas where it accounts for up to 90 percent of total fuel use. The steadily increasing pace of wood consumption, combined with damage due to drought, overgrazing, brush fires, and neglect, threaten an irreversible loss of forest resources unless remedial measures are taken. Such measures would not only alleviate the pressure on Senegal to rely more heavily on imported fuels, but would also aid in the prevention of soil erosion which, in turn, is an important contributing factor to the process of desertification throughout Sahelian West Africa.

Development Impact - High. Senegal's forests represent an important renewable resource, and measures taken to conserve or enhance this resource would greatly improve the outlook for long-term economic growth, particularly in the rural sector. Benefits would also accrue to the poor majority in urban areas, where fuelwood costs already account for a significant proportion of household budget, and in rural areas, where women and children often must spend time searching for firewood which might otherwise be spent in more productive pursuits.

Implementability - Moderate. Certain difficulties are inherent in any forestry project due to the divergence between perceived individual

interests and the common good; nevertheless, the experience of the World Bank and other development assistance agencies has shown that local populations can be motivated to protect their trees. Also in Senegal's favor is the fact that a national policy commitment has been made to forest resource conservation, and a number of programs have already been established in this area with some degree of success.

U.S. Role - Moderate. The U.S. has extensive experience in the development and management of forest resources and is in a position to mobilize the skills and support needed for massive undertakings in this area. There is little experience, however, in dealing with the many small producers that characterize Senegal's charcoal-making operations, or in the design and implementation of forestry projects acceptable to rural villagers and small farmers in developing countries.

Fertilizer Production and Use

Current Situation

About 115,000 tons of commercial fertilizer materials were used in Senegal during the 1976/77 crop year, placing Senegal first among the countries of West Africa in terms of total fertilizer consumption, and second only to Liberia in terms of consumption per hectare of arable land. A more than sevenfold growth in fertilizer demand since 1962 reflects the success of Government efforts to encourage usage of this input in the face of an increasing tendency toward monoculture and a decline in the practice of fallow and other traditional techniques of maintaining soil fertility. The growth curve has been irregular, however, and even in the best of years fertilizers are used by only a minority of Senegal's farmers. As with other purchased inputs, the farmer's decision to invest in fertilizers depends on a combination of factors, including crop market conditions, credit availability, Government pricing policies, and especially the weather. Fertilizer consumption dropped sharply during the drought years (1968-73), but has since been rising at an average annual rate of 20 percent.

The Government of Senegal hopes to increase consumption to 285,000 tons by 1981. An independent study by the International Fertilizer Development Center predicts that this level of demand will be attained no later than 1985 provided that weather conditions and fertilizer:crop price relationships remain favorable to the farmer. The demand for highly energy-intensive urea and nitrogen fertilizers, both of which are imported from abroad, is expected to grow by about ten percent per year up to 1985, compared with an annual rate of growth of about seven percent anticipated for other fertilizer nutrients.

Groundnut and millet producers account for the bulk (around 80 percent) of commercial fertilizer consumption. It is estimated that between 25 and 30 percent of the groundnut area, and between 15 and 20 percent of the area planted in millet (and sorghum), are fertilized annually in Sene-

gal. The most popular fertilizer compounds are 8-18-27 (used mainly on groundnuts) and 14-7-7 (the principal millet fertilizer). Other commonly used fertilizers include 10-21-21 and urea (45-0-0), along with limited amounts of phosphate rock (which is plowed into the soil on a quadrennial basis on some development project lands in the Groundnut Basin). Compound fertilizers are mixed in Senegal at the SIES plant at Rufisque from imported potassium chloride, ammonia, and sulfur and domestic tricalcium and aluminum phosphates. There are plans to expand the production capacity of this plant, which now totals 120,000 tons a year.

To encourage farmers to apply fertilizers to their fields at the recommended application rates, prices are heavily subsidized by the Government. Subsidies paid from the Price Stabilization Fund have amounted in some years to as much as 75 percent of the ex-factory price. As energy costs increase, this subsidy burden can be expected to increase commensurately barring any rise in farm-gate prices for harvested crops, which are also set by the Government.

Prices are uniform throughout the country and take no account of differences in nutrient content or distribution costs. Yet, there are important differences in both the consistency and the cost/benefit ratio of fertilizer applications in various parts of Senegal. In the southern regions, where rainfall is heavier and more chemically concentrated fertilizers are recommended, the profitability of their use tends to be quite high. Yield response declines, however, in the drier areas of central and northern Senegal and, in cases of extremely low rainfall, expenditures on fertilizer may be unprofitable.

Fertilizers are supplied as credit in kind by ONCAD to the cooperatives, except in the Fleuve Region where SAED buys and distributes these inputs directly to producers. Access to fertilizer and other types of commercial inputs is for the most part restricted to heads of households who belong to cooperatives. Women and other family members who may be allocated plots of land for cultivation purposes must generally rely on more

traditional methods of restoring and maintaining soil productivity or else accept significantly lower product yields.

Other methods of maintaining or restoring soil fertility used in Senegal include rotation, fallow, and the grazing of livestock on harvested fields. The rotation of grain with groundnuts is practiced by many farmers in the Groundnut Basin with encouragement from SODEVA. The practice of fallow, on the other hand, has gradually been abandoned in the more densely populated parts of the Basin where land is a constraint. With respect to the use of animal manure, the value of this practice is widely recognized by the Serer who predominate in the southern part of the Groundnut Basin, but it is difficult to execute in other agricultural zones where livestock-raising is not an important economic activity. Also, since most farmers do not plow their land prior to planting, the nutrients in the manure are often not very well mixed into the soil.

As far as is known, composting and green manuring are not widely practiced in Senegal. There is, however, some intercropping of cereals with nitrogen-fixing legumes, including cowpeas.

Ongoing Projects and Research Activities

SODEVA is promoting the integration of crop with livestock production in the Groundnut Basin, one benefit of which is expected to be an increase in manuare supply and accessibility. The application of unprocessed rock phosphate directly to the soil is also a feature of SODEVA's more intensive production packages, which typically include relatively heavy dosages of compound fertilizers as well. Research results at CNRA-Bambey have shown that some types of indigenous rock phosphates are poorly absorbed by the soil under Senegalese conditions, and efforts are underway to improve the absorption rate through the addition of other chemicals (as catalysts) or through symbiotic fixation with micro-organisms.

Fertilizer trials and extension demonstrations are conducted frequently at CNRA-Bambey and other reseach stations, but only rarely at the farm

level. Ongoing CNRA research on alternative means of maintaining soil fertility involves experiments with various crop rotation systems; the introduction of nitrogen-fixing soya beans (which are also high in protein content); and the use of green manure as a substitute for potassium (K) fertilizers. In this last regard, it is felt that plant residues, such as millet stalks, can return adequate amounts of potassium to the soil if they are cut down close to the ground at harvesting time (to stop plant transpiration which dries out the soil), left in the fields to dry, and then worked into the soil.

Two biogas plants have been tested at the village level by CNRA and CARITAS, one employing plant residues, the other human and animal wastes. Both produce a liquid fertilizer by-product for spreading on millet and groundnut fields. Neither test was considered a success, however, in the first case due to mechanical failure, and in the second to the reluctance of the villagers to haul animal dung from the fields to the plant and then bring the sludge back to the fields.

Possibilities for Further Work

Possibilities for further work in the area of fertilizer production and use include: (1) continuing research on nitrogen fixation through non-chemical means; (2) continuing research on ways to improve the capacity of the soils to absorb phosphate rock; (3) promotion of green manuring and composting practices, especially among women who generally do not have access to commercial fertilizer inputs; (4) research on socioeconomic barriers to the adoption of various soil fertility improvement measures; (5) identification of opportunities for modifying the grades of chemical fertilizers used in Senegal in favor of nutrients that are less costly from both an energy and economic perspective; and (6) investigation of more efficient, less energy intensive fertilizer manufacturing and distribution and application methods. There is also a need for the research results to be tested under actual field conditions and ultimately integrated into extension programs for the farmers. Here it should be noted that the Inter-

national Fertilizer Development Center has already proposed a project for funding by USAID which would study responses of food crops to fertilizers under various soil and climatic conditions at the farm level.

Rating

Energy Impact - Moderate. Although only a minority of Senegal's farmers currently employ commercial fertilizer, a significant expansion in the use of this input is implicit in the Government's short- and long-term objectives for the agricultural setor. Chemical fertilizers (especially nitrogen fertilizers) are highly energy-intensive, and any measures taken to improve the efficiency with which they are produced and used, or to replace them with alternative means of maintaining soil fertility, could result in substantial energy savings. However, there are trade-offs between energy savings and productivity gains, and it is possible that only minor increases in yields can be achieved without chemical fertilizers, especially when used in conjunction with improved seed varieties and other elements of modern production technology.

Development Impact - High. As mentioned, the Government of Senegal's plans for the agricultural sector, and in particular those oriented those the goal of achieving self-sufficiency in food grains, are closely tied to increased fertilizer use. Yet rising fossil fuel prices will mean higher fertilizer production and distribution costs, which must either be absorbed by the Government (possibly at the expense of other development programs) or passed on to the farmers in which case adjustments in agricultural pricing policies would be required to sustain even current levels of fertilizer use. Any measures that could be taken to moderate these effects, while at the same time encouraging a greater proportion of Senegalese farmers to adopt the soil fertility maintenance practices essential for obtaining higher yields, would have a high development impact.

Implementability - Moderate. As a rule, soil fertility improvement measures (without accompanying mechanization) demand a greater labor

input on the part of the farmer and often a cash expenditure as well. In areas where labor is the critical constraint on agricultural output, or where market conditions provide little incentive for surplus production, farmers may be reluctant to make the required investment no matter what the expected returns. Nevertheless, the Government of Senegal has achieved notable success in promoting the use of commercial inputs and new production technologies, especially among cash crop farmers in the Groundnut Basin, and there is reason to believe that producers will continue to be receptive to measures that show promise of improving yields, subject to the abovementioned constraints.

U.S. Role - High. The United States is a world leader in revolutionizing agricultural production technologies, and has much to contribute to the area of applied research on soil and plant nutrition, fertilizer production and use, and alternative soil fertility restoration methods.

Water Pumping

Current Situation

An integral feature of the Government of Senegal's strategy for achieving self-sufficiency in food grains is management of the country's water resources in a manner that will permit irrigated cultivation on what was once marginally productive land. Yet most irrigation projects, whether existing or planned, depend on pumping systems to ensure reliable supplies of water to rice and other crops. The cost of operating these pumps, which are powered with diesel fuel or gasoline, can be expected to rise with any increase in the price of imported fossil fuels. For this reason, the Government has placed high priority on developing alternative technologies for pumping water based on locally-available energy sources.

In the mid-1970's, approximately one-sixth of Senegal's rice land, accounting for about one-third of the country's total rice production, was being supplied with water by means of pump irrigation systems. Nearly all of this land was located in the Senegal River Valley, where it is estimated that as as many as 300,000 hectares are potentially suitable for irrigated cultivation. The Government's long-range plans for agricultural development throughout the Valley rest on construction of two dams -- one in the River Delta and the other in Mali -- that will regulate the River's flow and prevent the intrusion of saline waters upstream from St. Louis.

Salt water intrusion is also a serious impediment to expansion of rice production in the Casamance River drainage basin, which would otherwise enjoy a comparative advantage over the Senegal River region for reasons which include more abundant rainfall, a better soil base, and a long tradition of rice culture. Some land has already been reclaimed by building small concrete barrages to arrest the flow of salt water and much larger water management projects are on the drawing board. The possibility of pumping fresh water from underground aquifers is also under study.

It is estimated that more than two million liters of refined petroleum products (mainly gas-oil and diesel fuel) are used to pump irrigation water in the River Valley in a typical year. In most cases, only a single crop is produced under irrigated conditions, although it is anticipated that a second crop can be grown during the dry season once the dam in the Delta has been completed to provide salinity control. Receipts from sale of this second irrigated crop should help to cover some of the fixed costs of operating the pumping system. Fuel requirements, on the other hand, can be expected to increase in amounts commensurate with the growth in demand for irrigation water.

Diesel pumps are also used in Senegal to draw water for household uses and for livestock, although they are the exception rather than the rule. Much of rural Senegal relies on underground aquifers for at least some of its water supplies and, in most cases, the arduous task of drawing water from wells is performed manually by women.

The 1968-73 drought lowered the water table in Senegal, drying up wells dependent on shallow unconfined aquifers, and also caused a decline in the rate of water flow in many streams. As a result, finding water during the dry season has become a problem of crisis proportions in some areas of the country, especially in the north where rainfall is low and erratic even in the best of years. The Government is now working to improve rural water supplies by digging deeper wells and drilling boreholes to depths of up to 150 meters in order to reach the confined aquifer that extends over most of Senegal. Artesian pressure can bring the water up to within about 15 meters of ground level, but from there it must be lifted by mechanical means.

Ongoing Projects and Research Activities

Small-capacity solar pumps, both thermal and photovoltaic, have been used in Senegal on an experimental basis for a number of years and may soon be ready for manufacture and distribution on a commercial scale. In 1966,

researchers at IPM began work on a 1 KW thermal system, with a 88 m2 collector surface and an hourly pumping capacity of 5-6 m3 from a depth of 25 meters. Several years later, replicas of this system were fabricated and installed by SOFRETES in five villages, where they continue to operate to this day. Another 1 KW prototype, consisting of 70 m2 collectors using single glass panes and "role bound" plates, and employing Freon rather than butane as a working fluid, was developed by IPM in 1975 at a cost of about $40,000 (8-10 million Francs CFA). This improved version, which has a 8-10 m3 pumping capacity, has since been manufactured by SOFRETES and installed by SINAES in four rural villages in the regions of Thies and Fleuve.

Most recently, AID and the FAC are sharing the costs of installing and testing a much larger 30 kw solar-thermal pumping system for use in conjunction with an AID-financed Irrigated Perimeters Project at Bakel in the Senegal River Valley. The system employs a Rankine-cycle heat engine to covert thermal energy into mechanical energy. In addition to driving a Freon feed pump and the two pumps used by the collector loop, the engine's turbine shaft powers a small electrical generator and the main river water pump. Power for the start-up process is provided by an auxiliary electric motor. The system, built by SOFRETES and Thermo-Electron (U.S.) with support from SINAES, was supposed to have been in operation by June of 1979, but it is understood that construction has been delayed due to technical problems. When completed, it will be capable of supplying 6,400 cubic meters of water a day to a 200-hectare area. The project also makes provisions for monitoring and evaluation of the pump on technical, social, institutional, and economic grounds.

Another FAC-supported project involves comparing the performance of a 10 kw solar-pump with a diesel-powered facility in providing water for irrigation of forage crops and livestock in the sylvo-pastoral zone. As of late 1978, the equipment was awaiting final field testing prior to installation.

There are at least four Guinard photovoltaic pumps operating in Senegal, one on the grounds of CNRA at Bambey, the other three in villages in

Diourbel (Babeck and Toki) and Fleuve (Aere-Lao). The FAC-financed Bambey pump has a rated power of 800 watts and uses RTC (French) solar cells. The current from the cells drives a DC motor. The water is drawn from a 145-meter borehole and rises through artesian pressure to a point about 13 meters from the surface, from where it can be pumped into a 20 m3 storage tank. Studies have found the pumping rate to be proportional to the intensity of solar radiation, provided the panels are kept properly dusted. The amount of insolation is fairly steady throughout the year, except toward the end of the dry season (March-June) when sand storms reduce the penetration of solar rays. This poses a problem because it is during these months that the annual peak water demand for livestock occurs. It has been suggested that a biogas operation could use the animal dung that accumulates near the well to provide supplementary energy for pumping. However, this solution appears at first glance to be too expensive in terms of investment costs, requiring virtually two separate pumping systems at the same location.

The similar but slightly more powerful (1,300 peak watts) photovoltaic system at Baback utilizes SOLAREX (U.S.A.) panels and produces 80 m3 of water per day. The panels went dark about a year after the system was installed and had to be replaced. The pump now appears to be working well and supplies water for some 7,000 people living in and around the village. The water is allocated by the village chairman, and is used mainly for household purposes. Plans to irrigate a one ha vegetable garden with water pumped from the tube well have not materialized due to the unexpectedly strong demand on the part of families wishing to satisfy their domestic water needs. The Baback pump and the 900 peak watt systems at Toki and Aere-Lao, were all privately financed and cost between $35,000 and $50,000 each to install.

Faculty members at the University of Dakar's Department of Physics (whose chairman also serves as the director of IPM) have developed another photovoltaic pumping system which, unlike the Guinard models, utilizes batteries for storage. The pump, which was installed on the roof of the

Physics building in 1976 at a cost of about $10,000, is driven by a DC motor powered by French-made solar cells having a combined average output of 350 watts DC. Thus far, maintenance has been limited to periodic dusting of the panels and preservation of the water level in the batteries and no lubrication or replacement of parts has been required.

Conditions suitable for the use of wind-powered technologies for pumping water and other purposes are found in the Atlantic coastal zone between Dakar and Saint Louis. Several windmill designs have been tested, including a horizontal-axis model constructed from local materials at the Hydraulics Laboratory of the University of Dakar, and a Savonius vertical- axis system built on the grounds of IUT and subsequently installed by SINAES in the village of Diagle (Fleuve), where it is operating in conjunction with a solar collector. In early 1978, SINAES installed a larger Aerowatt model, with an hourly pumping capacity of 15-20 cubic meters, at l'Ouli (Louga). The Ecole Polytechnique de Thies has also conducted village-level windmill tests, using Canadian funds and Australian and German-made equipment. Thus far, nearly all of these experiments have been frustrated by low wind velocities and frequent breakdowns, the former attributable to poor choice of location and the latter to a lack of spare parts and inadequate routine maintenance on the part of local villagers.

Possibilities for Further Work

Possibilities for further work in this area exist with respect to all three types of solar water pumping technology (solar-thermal, photovoltaic, and wind). Principal opportunities include: (1) financial support (subsidies and/or assistance with on-site development costs) of proposed efforts to build and distribute low-capacity photovoltaic and solar-thermal systems on a commercial scale; (2) continued testing and refinement of large-capacity solar plants similar to that designed for Bakel; and (3) further work on the application of existing windmill technologies and equipment maintenance procedures to conditions prevailing in selected coastal areas. There will also be an on-going need for local researchers to accommodate

changes in the state of the art of solar technology, if and as these changes occur and are appropriate in the Senegalese context.

Rating

Energy Impact - Moderate. Significant savings of imported fossil fuel energy can be achieved if renewable sources are used in place of diesel fuel. However, the amount of energy embodied in pump construction will also be significant, especially if solar-powered systems are to be made available in the quantities needed for domestic, livestock, and irrigation use in rural Senegal. While these energy technology requirements could be met from renewable sources, they are more likely to be supplied by fossil fuels, thereby mitigating the potential energy impact of improvements in this area.

Development Impact - High. Senegal has little hope of achieving its long-run development goals for the rural sector unless more adequate and reliable supplies of water can be made available for household purposes, livestock, and irrigation. In many parts of the country, the only way to assure such supplies is to tap the underground water table. For this reason, and also because of anticipated increases in the cost of fossil fuels required by conventional pumping technologies, the Government of Senegal has placed a high priority on the development of domestic resource applications for pumping water in rural areas.

Implementability - Moderate. At the present time, solar-thermal and photovoltaic pumping systems carry relatively high investment costs and are not competitive with diesel-powered systems on a straight cost comparison basis, in spite of the fact that they require little maintenance and have many non-economic advantages. Unless and until these costs can be reduced, measures to promote the use of solar technology for water pumping are likely to require significant inputs of foreign aid along with continued support from Senegal's public sector in the form of subsidies, grants, and other financial incentives.

U.S. Role - Moderate. Although the U.S. has been a leader in the development of solar energy technologies, it has less experience with small-capacity applications than, for example, the French. It is, on the other hand, in a good position to mobilize the large amounts of investment capital required.

Cooking Methods and Equipment

Current Situation

The vast majority of Senegalese households use either charcoal or firewood for cooking. Charcoal is a preferred fuel in urban areas, even among many families who can afford to cook with electricity or gas, because it gives a distinctive taste to the food and because certain beneficial magical properties are associated with its use for cooking. In rural areas, where few households have access to commercial energy forms, firewood is the traditional cooking fuel although plant and animal residues may be burned when wood is unavailable.

Stoves are rarely if ever used for cooking over firewood; instead, the wood is placed directly under a cooking pot supported by three stones. Since there is no device to concentrate the heat generated by the fire, the energy conversion efficiency of this system is extremely low, ranging in most cases between three and eight percent. Also wasteful of energy are the small tin stoves (fourneaux malgaches) almost universally used for cooking with charcoal, which not only lack insulation but also are without any mechanism for regulating the draft opening on one side of the stove.

Ongoing Projects and Research Activities

As far as is known, there are no ongoing projects in Senegal concerned with improvements in the efficiency with which firewood is used. However, IPM has expressed interest in developing an improved version of the locally-made charcoal stove and has discussed with AID the possibility of obtaining technical assistance from U.S. sources.

Two pilot biogas operations installed in villages by CARITAS (Catholic Relief Services) and CNRA were to have produced methane gas for household lighting and cooking, but have experienced problems due to equipment breakdowns as well as a reluctance on the part of the villagers to collect and transport the agricultural wastes needed to supply the gas-plants.

A feasibility study was completed by Brace Research Institute for the United Nations Environmental Programme (UNEP) in 1976 of a Rural Village Energy Demonstration Center where different types of renewable energy technologies would be adapted and tested for village use. Among the technologies proposed were solar cookers and pyrolytic conversion of groundnut shells to produce char for use as cooking fuel (along with oil and gases for industrial purposes). Two sites have been identified for testing the Center concept, but to date no equipment has actually been installed and it is understood the project is still under review by UNEP and the Government of Senegal.

A prototype for a parobolic solar cooker has been constructed by IPM, and IPM researchers have reportedly been seeking information on heat storage technologies for use in conjunction with solar cooking equipment. Village-level energy experiments involving solar cookers have been conducted on a limited basis by the Government's Department of Human Resources (Promotion Humaine), although little is known regarding the results of these tests.

Finally, interest has been expressed by the DGRST and others in a process whereby groundnuts shells can be compacted into briquettes for use in place of charcoal. The process would utilize surplus shells now being dumped by the oil mills and private shelling plants and/or shells retained on-farm and bind them with a locally-produced binding material.

Possibilities for Further Work

There may be opportunities to reduce per capita demand for fuelwood, both through improvements in the efficiency with which wood and charcoal are converted to useful heat, and through substitution of alternative fuel sources. Principal areas of interest include: (1) modification of the indigenous charcoal stove, possibly by lining it with a mantle of clay to provide better heat insulation or by incorporating a mechanism to regulate air inflow; (2) design and promotion of wood-burning cooking stoves adapted

for local use; and (3) continuing efforts to explore the feasibility of utilizing biogas or products made from crop residues (especially groundnut shells) as a substitute for wood-based cooking fuels.

Rating

Energy Impact - High. In light of the fact that wood-based fuels (charcoal and firewood) account for more than half of all fuel energy consumed in Senegal, any improvement in the efficiency with which these scarce resources are used would have a significant energy impact.

Development Impact - Moderate. While a small improvement in the efficiency of cooking equipment would not have any major impact on the overall economy, it could benefit rural and urban households, whose members would be required to gather and/ or purchase smaller quantities of fuel to supply their daily needs.

Implementability - Moderate. Cooking methods reflect centuries of tradition and experience and are often difficult to change. Resistance may also be encountered whenever families are asked to abandon a system involving virtually no cash outlay in favor of one requiring an investment in commercial equipment, however nominal the cost. Nevertheless, sufficient incentive for Senegalese households to adopt energy-saving cooking technologies may be provided if, as is expected, charcoal prices continue to rise and firewood supplies become increasingly scarce in the countryside.

U.S. Role - Moderate. Although the U.S. undoubtedly has the requisite technical capabilities, it may be less experienced than some other countries in dealing with the sociocultural obstacles surrounding any effort to change behaviorial habits and patterns at the household level in the Third World.

* * *

The remaining five potential areas of concentration would have lower priority for identifying assistance projects or research activities, and thus are treated in less detail than the five areas considered above. The principal purpose of the discussion which follows is to summarize the rationale for each of the ratings assigned in Exhibit 5.1.

Household-Level Grain Storage

Energy Impact - Moderate. The expenditure of energy required to improve household-level grain storage facilities must be weighed against the resulting savings of energy embedded in the grain that would otherwise be lost due to fire, mildew, and predation. In most cases, and especially when human energy is included in the calculations, a net benefit in energy terms can be expected from improvements in this area, even though some additional commercial energy inputs may be involved.

Development Impact - High. Losses of grain stored in the traditional manner in Senegal are estimated at 15 percent of the harvested crop which, in the case of millet, sorghum, and rice, would amount to a combined total of 80,000 tons in a typical year. This total assumes added significance in light of Senegal's food grain deficit, which averages 350,000 to 400,000 tons annually, and the serious calorie shortfalls that occur in many rural areas during the rainy season when grains stores are depleted. Thus, any reduction in grain losses that can be achieved through improvements in storage conditions would have important economic and nutritional benefits for rural poor target groups and for the country as a whole.

Implementability - Moderate. Traditional grain storage systems embody the knowledge and experience of generations of farmers who have sought to control insects, rodents, fungi, and other pests employing only locally-available materials. In Senegal, a number of indigenous control measures have been devised, such as the use of cylindrical sealed storage baskets plastered with a mixture of mud and cow dung and the packing of grain in sand and cinders for protection against insects. However, such controls have been adopted by only a small minority of households, and their potential for replication may well be dampened by cultural inhibitions, lack of suitable materials, and the investment in time and personnel required to change time-honored traditions in rural areas.

Chemicals and/or pyrethrum-based products afford effective means of pest control, but may be difficult to promote for use on subsistence crops

due to their high cost. Cost may also be a factor impeding widespread acceptance of improved storage system designs and construction materials, including the metal oil drums that ITA has introduced at a number of village test sites over the past eight years. The introduction of storage units appropriate for village, rather than household, grain storage may offer a partial solution to this problem, especially where the villagers are willing to donate the labor needed for construction. In this connection, the Post-Harvest Technology System designed by the International Development Research Center (IDRC) includes grain storage facilities, intended for use at the village level, which are made of cement and have tin roofs. Two units were installed in the village of N'Diamsil in west central Senegal in 1976, each containing four separate compartments with a storage capacity of one ton apiece. It is not known, however, to what extent local preferences for individual household storage units as opposed to shared village-level facilities may inhibit the success of this system in some rural areas of Senegal.

U.S. Role - Low. Although the U.S. has developed highly advanced technologies for protecting commercial grain stores, it has no particular advantage with respect to household or village storage systems in the LDC's, which generally must be designed and adapted to social, economic, and environmental conditions prevailing at the local level and make use of locally-available materials and skills.

Aflatoxin Control

Energy Impact - Low. Aflatoxin is a poisonous substance produced by aspergillus flavus, a fungus which thrives on groundnut tissues that have been weakened by drought and insect damage or have been improperly dried and stored. While aflatoxin has no contaminating effect on groundnut oil products, it has been identified as a carcinogen in the residue of the oil extraction process called oilcake. In Senegal, most of this oilcake is exported although some is fed to domestic livestock, posing a threat not only to the health of the animals, but to humans who consume meat, milk, eggs, and other animal products. Measures to combat the problem of aflatoxin contamination, which in some years affects a very high percentage of Senegal's groundnut crop, could have important health-related benefits and might also enable the processing industry to obtain higher prices on the world market for oilcake. It is unlikely, however, that such measures would achieve any energy savings; to the contrary, depending on the type of control employed, they could require additional quantities of commercial energy in the form of insecticides, fungicides, or fuel power for drying equipment.

Development Impact - Moderate. In addition to the health and economic impacts mentioned above, any improvement in the quality of the groundnut crop affecting export prices should also affect producer prices, and therefore the earnings of rural target groups who derive most of their cash income from groundnut production.

Implementability - Moderate. Measures that have been proposed to control aspergillus flavus in Senegal include the development of fungus-resistant seed varieties, more widespread use of insecticides and fungicides, and improved methods of drying the crop after harvest. ITA and IPm are also cooperating on an applied research project involving the use of solar dryers to destroy the fungus before the groundnuts are stored. However, producers are reluctant to incur too much weight loss to water evaporation in drying, as this reduces the value of their crop. They may also resist

spending money on chemicals or other products to protect their crop from aflatoxin unless they can derive tangible benefits from such expenditures, such as a premium paid by ONCAD for groundnuts that do not exceed allowable contamination levels.

U.S. Role - High. The United States ranks among the world's leading producers of groundnuts and research on ways to control the growth of aspergillus organism (which is also a problem with corn and several other crops) has been underway at U.S. research institutions for many years. As yet, scientists do not know how to prevent aflatoxin in plants growing in the field, although technologies do exist for mitigating contamination during storage and for analyzing lots of susceptible foods to eliminate those that are contaminated.

Groundnut Shell Utilization

Energy Impact - Moderate. Groundnut shells would appear to represent an important domestic energy resource, offering potential as substitutes for scarce fuelwood and high-price imported fossil fuels. Processes also exist whereby shells can be converted to briquettes for use with cooking stoves or ground and mixed with other substances to produce plywood or animal feed. However, it is doubtful whether Senegal's surplus of shells, above and beyond those already being utilized as fuel by the oil mills, is large enough to make a significant contribution to national energy supplies at the present time -- at least not on a consistent basis. The size of the surplus is largely dependent on the success of the groundnut harvest which in turn depends on the amount and timing of rainfall, market conditions and a host of other factors. While in good years some mills may have an excess of groundnut shells which they dispose of by dumping, in poor years they are forced to purchase substantial quantities of fuel oil to supplement inadequate shell supplies.

If the Government of Senegal eventually achieves its goal of stabilizing annual oil groundnut production at 1.2 million tons -- a level of output that is now being approached only one year out of every five -- the outlook for projects in the area of groundnut shell utilization would be considerably improved. Production increases are also targeted for confectionary groundnuts which, if attained, would make the shelling plants that handle this crop a promising future source of supply.

Development Impact - Moderate. Subject to the supply constraints discussed above and the availability of appropriate conversion technologies and distribution infrastructure, any program that would substitute groundnut shells for endangered or non-renewable energy sources would have a favorable development impact. In Senegal, shells are already replacing limited amounts of imported fossil fuels, not only in connection with groundnut processing but also for generating electricity for the city of Ziquinchor in the Casamance region. In some rural areas, they are burned in

lieu of firewood when the latter is in short supply, although the energy efficiency of the "open fire" conversion process is extremely low. Conversion efficiencies improve, however, when biogas digesters are employed, as has been done on an experimental basis by CARITAS and CNRA-Bambey. The production of biogas from groundnut residues and other agricultural wastes also has attendant benefits for agriculture in the form of a high-grade sludge which can be used to restore or maintain soil fertility.

Implementability - Low. Unless and until raw material supplies can be stabilized at a level high enough to ensure a steady supply of surplus shells, prospects for implementation of projects in this area will remain low. This assessment is supported by the findings of an FAO investigation regarding the production of briquettes from groundnut shells, which concluded that a venture of this nature would not be feasible for Senegal due to supply constraints. The potential for introducing improvements in the efficiency with which shells are converted by the mills to useful heat is also limited, mainly because of the high degree of autonomy with which the mills are permitted to operate in Senegal. Nevertheless, it is possible that the mill operators might adopt such measures on their own behalf if they were convinced that significant savings in fuel energy costs could be achieved.

The shell byproducts of groundnuts retained on-farm as seed or for household consumption are also potential sources of energy for cooking and other domestic uses, and to some extent are already being burned for these purposes in rural areas of Senegal. However, it would appear that quantities are too small (less than 12,000 tons annually compared with an estimated 168,000 tons handled at the mills) and too widely scattered to form the basis of a viable collection, processing, and distribution business, except perhaps in a few of the larger villages in the major groundnut-producing regions. Even then, villagers may be reluctant to make the requisite investment in labor and equipment needed to obtain relatively small and highly variable amounts of fuel.

U.S. Role - Moderate. That the U.S. has the capacity to develop innovative technologies for the utilization of groundnut wastes has been demonstrated by, among others, researchers at the Georgia Institute of Technology, who perfected the process for compacting groundnut shells into briquettes. However, the adaptation of such technologies for use in Senegal requires in-depth understanding of local conditions and constraints and, in this, other countries, notably France, may have the advantage.

Small Mechanical Millet Processing

Energy Impact - Low. An estimated 95 percent of all millet produced in Senegal is processed manually by women. Traditional threshing, dehulling and grinding methods are arduous and can consume up to four hours daily in a schedule already crowded with activities. The use of appropriate mechanical means for performing these tasks could "save" human energy for investment in more economically and socially productive employment and, in this respect, would have a beneficial energy impact.

Another energy-related argument in favor of improved millet processing technologies is their potential for reducing product losses. In Senegal, these losses are reportedly two to three times higher when processing is done by hand methods (usually with mortar and pestle) than when machines are used. However, the fuel energy costs of substituting mechanical for manual processing techniques may be considerably higher than any savings in embodied energy achieved.

With the exception of a few experimental pedal-driven millet huskers developed at CNRA-Bambey, all small-scale mechanical millet processing machines utilized in Senegal operate on diesel fuel. The Post-Harvest Technology System now being tested at the village level by the International Development Research Center (IDRC) and CNRA also utilizes diesel-powered processing equipment (threshers, dehullers, and grinders), as does ITA for its program, supported by UNICEF, of distributing locally available grinding mills to needy rural villages. This pattern of reliance on diesel power for mechanical grain processing is likely to continue as, while processing equipment does not necessarily need to operate on conventional forms of energy, devices employing pedal, animal, or other alternative sources of motive power are thought to produce an inferior product and, what is more, are often no faster than the hand methods they are designed to replace.

Another potential source of demand for increased amounts of fossil fuel energy is ITA's proposed millet flour commercialization program. In

an effort to encourage urban households to reduce consumption of imported rice and wheat, the Institute has developed a dry, stabilized millet flour which can be used to make instant couscous or blended with wheat flour to make bread and other bakery products. Three different machines are used to process the grain: an eight hp conical-type dehuller, manufactured locally by SISCOMA; a duster, made in West Germany and used to remove dust particles adhering to the grain after hull removal; and a 3.5 hp grinding mill which, like the SISCOMA dehuller, is locally made. One advantage of this mechanized equipment is that it permits dry-milling of the millet grains. This produces a product with a much longer storage life than when water is used to aid in separating the grain from the hull, as is the case with hand methods of dehulling.

At present, neither the couscous nor the bakery products are marketed on a large-scale basis, although bakeries in Dakar are supposed to use some millet flour in their bread. However, the ITA plans to promote consumer acceptance of these products through advertising and, if successful, to have the millet flour mass-produced by commercial mills. Presumably these mills would employ equipment similar or identical to the machines now being used by the Institute, all of which operate on fossil fuels.

Development Impact - Moderate. Studies have found that, next to a reliable supply of water, women give top priority to obtaining equipment that will help to ease the time- consuming and tiring burden of threshing and grinding grain, and are willing to pay accordingly. The majority of women queried in one recent (1977) survey sponsored by the IDRC said they would use any time saved in processing grain either to engage in commerce, grow vegetables, or raise poultry or other small animals for food. The introduction of labor-saving grain processing devices would also free women to spend more time working in either their own fields or those of family members. However, as was pointed out by Loose in her paper, "Women in Rural Senegal,"1/ lack of time is only one of several factors inhibiting growth

---

1/ See Edna E. Loose, op. cit.

of women's farming incomes, which also include lack of access to modern agricultural inputs, extension services, and other benefits of the male-dominated cooperative system.

With respect to threshing in particular, there is at least one additional development-related benefit that might be derived from increased use of mechanical grain processing equipment. At present, the amount of time that must be expended to prepare hand-threshed millet for sale acts as a disincentive for producers to market their surplus grains through legal channels. If mechanical threshers were widely available, producers might be encouraged to sell more millet to ONCAD, which in turn would enhance ONCAD's ability to maintain security stocks of grain. Here again, however, lack of labor-saving threshing devices is probably less important than government farm-gate prcing policies as a factor affecting producer's decisions on when and where to sell their grain.

Implementability - Moderate. Commercial millet threshing and grinding services have been available in some of the larger and more prosperous villages in the Groundnut Basin for a number of years. Generally speaking, these services are used by only a minority of households, and often on an irregular basis, presumably because of the expense involved. Nevertheless, mechanical threshing and milling equipment has been well-received in villages where it has been introduced on an experimental basis. It is interesting to note that in one such village being studied in conjunction with the Purdue West Africa Project, men took over responsibility for threshing once machines became available.

Mechanical dehuskers have been less favorably received than other types of processing equipment, as they tend to produce a lower-quality product containing more bran and a greater quantity of broken grains. Also, if women cannot afford the expense of both machine dehusking and machine milling, they prefer to pay for the latter as milling, when performed by hand, is considered the more laborious of the two tasks.

In the past, most small-scale grain threshers and grinders in Senegal have been owned and operated by private entrepreneurs, who maintain their own machines and sell their services at a profit. Apart from a few experimental projects, there is little precedent for cooperative or community-based ownership and maintenance of processing equipment of the type that would probably be necessary if such equipment were to be made available countrywide. Thus, prospects for implementation of projects in this area will rest in part on the organizational aptitudes of participating communities and on the quality of training and technical assistance they receive. Another critical variable will be the ability of households to pay for mechanical processing services as fuel costs continue to rise, highlighting the importance of promoting equipment designs that are most efficient from an energy perspective.

U.S. Role - Moderate. The U.S. has developed and manufactured highly-efficient mechanical equipment for processing grain, but has less experience than Japan, Taiwan, India, and others with "appropriate technology" designs.

Small Mechanical Rice Milling

Energy Impact - Moderate. With the exception of paddy destined for distribution to domestic markets by ONCAD, which is milled at one of four industrial facilities, most of the rice paddy produced in Senegal is still processed by laborious and time-consuming hand methods. Although some (30-40) small diesel-powered hullers are in operation, their use is now discouraged by the Government because of the threat they pose to its control over the commercial rice distribution system. For this reason, the area of small-scale mechanical rice milling has received little or no attention from Government-funded research agencies, even though, on a fuel-input-per-ton-of-product-output basis, small hullers have been shown to be far more energy-efficient than the large industrial mills.

Additional energy savings might be achieved by milling paddy in small-scale facilities if these facilities were located in or near the major rice-producing villages, as this would obviate the need to transport paddy, which is about 50 percent heavier than milled rice, the long distance from farm to mill. It would also eliminate costly double-hauling of that portion of the industrial milling output which is returned to the region where it was produced.

The use of small mechanical hullers in lieu of industrial processing equipment could thus have a beneficial energy impact. On the other hand, substitution of these hullers for the hand processing techniques employed by the majority of rice-producing households in Senegal could have significant fuel energy costs if, as seems likely in light of previous experience with pedal-driven equipment, the only viable alternative to the mortar and pestle is the machine which operates on diesel power. As with millet the potential exists for savings of human energy and for reducing losses in milling that could moderate this increased fuel burden, although the relative value of these different effects would be hard to measure in energy terms.

Development Impact - Moderate. For the most part, the points raised in evaluating the development impact of improvements with respect to small-scale millet processing hold true for rice processing as well. Hand pounding is the responsibility of women, and it takes them an average of two and a half days to pound a 35 kg sack of rice. Innovations which would permit them to spend this time on more productive activities could have important development benefits for the rural sector.

The potential development impact of a shift to small-scale technology for processing paddy that is now being handled by the industrial mills is more difficult to assess. The four mills, and especially the two SAED-operated facilities at Ross-Bethio and Richard Toll, represent a considerable investment in infrastructure and equipment which could not easily be converted for other uses. At the present time, the capacities of these mills are seriously underutilized, and this problem would be intensified if significant quantities of paddy were to be diverted to small-scale processing facilities. Over the longer term, however, a focus on small-scale technology for rice processing could be more advantageous from a development perspective than investment in additional industrial-type milling facilities, both in terms of the employment and income that small hulling operations might generate at the rural village level, and in terms of the savings that would be achieved in transportation costs which, unless they are subsidized, are passed on to rice consumers.

Implementability - Moderate. Until the Government of Senegal is able to gain better control over the commercial rice distribution system, it is not likely to endorse programs to introduce small mechanical hulling equipment for use at the village level. However, if, through a change in farm-gate pricing policy or other measures that would encourage farmers to market their rice through legal channels, it finds that it can attract most marketable surpluses of rice with or without a processing monopoly, the Government's position could be altered in favor of one that gives more weight to energy and developmental considerations. Other factors affecting prospects for implementation of projects in this area are similar to those

described for millet processing, and relate to questions of equipment cost and maintenance, organizational infrastructure, and the price elasticity of demand for milling services in light of rising energy costs.

U.S. Role - Moderate. As in the case of millet, the U.S. is technically capable of developing high-efficient equipment for processing rice, but has less experience than Japan, Taiwan, and others with "appropriate technology" designs.

Chapter Six

CONCLUSIONS AND RECOMMENDATIONS

Conclusion on Energy Use in the Food System

With the significant exception of industrial fishing,1/ the five areas of the food system for which profile analyses are provided in Chapter Four can be said to account for the bulk of all commercial energy used to produce, process, distribute, and prepare food in Senegal. Those parts of the food system that have not been subjected to analysis are either relatively small in terms of product output (i.e., commercial vegetables) or consume only negligible amounts of direct fuel inputs (i.e., root crops, peas, beans, and maize).

Relative to other areas of Senegal's economy, however, the food system is not a large consumer of commercial fuels in the aggregate sense. Exhibit 6.1 compares the approximate amounts of liquid fuels and electricity used annually by the five product systems which were analyzed in this study with total national consumption of these energy forms. While the product energy data, which are taken from the reference tables in Chapter Four, may slightly underestimate actual consumption due to deficiencies in the data, they are considered sufficient for purposes of establishing order-of-magnitude relationships. The various transformation activities associated with millet and sorghum, rice, groundnuts, and artisanal (maritime) fishing together account for only 6.2 percent of all liquid fuels and less than one percent of all electricity consumed in Senegal. Furthermore, nearly three

---

1/ The modern segment of Senegal's fishing industry is highly energy-intensive, accounting in 1975 for more than 25 percent of all gas-oil consumed in Senegal, and nearly five percent of total gasoline consumption. Additional amounts of liquid fuels and electricity are utilized by firms engaged in processing and distributing the industrial catch, most of which is exported to European markets.

Exhibit 6.1

Senegal: Estimated Annual Liquid Fuel and Electricity Consumption by Selected Food System Components As Percentage of Total Domestic Liquid Fuel and Electricity Consumption

	Liquid Fuel		Electricity	
	Quantity (thousand liters)	Share (percent)	Quantity (mwh)	Share (percent)
Selected Food System Uses				
Millet and Sorghum	336	0.1	-	-
Rice	3,229	0.5	-	-
Groundnuts	1,156	0.2	1,526	0.3
Artisanal Fishing	32,273	5.4	2,750	0.5
Subtotal	36,998	6.2	4,276	0.8
All Other Uses	558,214	93.8	545,724	99.2
TOTAL CONSUMPTION	595,212	100.0	550,000	100.0

Source: Derived from information presented in Chapters Three and Four. An average conversion rate of 1,158 liters = 1 metric ton of refined petroleum products is used to permit comparison of liquid fuel data. Estimated total liquid fuel consumption is for 1976 and excludes jet fuel sold to foreign aircraft. Estimated total electricity consumption

quarters of this energy usage can be ascribed to a single product (artisanal fish) and, by and large, to a single transformation activity (motorized fishing) which annually consumes an estimated 31 million liters of refined petroleum products, or 5.4 percent of domestic liquid fuel consumption. After fishing, the rice system -- and more specifically irrigated rice production -- is the second greatest commercial fuel consumer in the food system, followed by groundnuts and millet. Fishing and groundnuts also use up, either directly or indirectly, an estimated 4,276 mwh of electricity per year, compared with a total of 550,000 mwh consumed for all purposes in Senegal.

With respect to chemical fertilizers, it is estimated that the five food systems analyzed consume 90 percent of the total for the country as a whole. While no adequate information is available on aggregate consumption of pesticides and fungicides in Senegal, it is thought that the majority of these materials are utilized within the country's food system.

Traditional energy sources, including animal labor, crop residues, and fuelwood, are the predominant inputs used for most activities in the food system. Even product distribution, much of which requires motorized forms of transport, accounts for only a minute proportion of annual commercial fuel consumption in Senegal. The picture is changing, however, and many of the Government of Senegal's plans for development of the primary sector assume that adequate supplies of fossil fuels and fossil fuel-based chemical inputs will continue to be available at prices that are not prohibitive to the economy. Planned projects involving the pumping of irrigation water to rice lands, motorization of additional artisanal fishing boats, and intensification of cereals production through more widespread use of chemical inputs are seriously threatened by the rapid rise in the price of imported fuels -- and nearly all of Senegal's commercial energy is imported.

Recommended Strategy

The future supply of traditional energy sources is also in serious jeopardy. The clearing of woodlands for cultivation -- often accomplished

through burning -- and the thinning of forests for fuelwood and forage, combined with the devastation caused by periodic droughts, is rapidly reducing Senegal's already meager forest reserves. Plans for future energy use should aim at reducing the consumption of fuelwood by increasing the efficiency of the transformation processes which use firewood and charcoal and by substituting other energy sources for these fuels. Two of the recommended high priority areas for developing energy improvement projects deal with fuelwood and with the three main activities required for better fuelwood management, namely forest production and conservation, promotion of more efficient ways of charcoal making, and introduction of improved methods of burning firewood and charcoal in the cooking process. Considering that Senegal has virtually no oil, gas and coal reserves of its own, and that food transformation technologies using solar power, as for example the parabolic reflector for cooking, as yet do not represent viable alternatives that can be implemented on any significant scale, it is expected that fuelwood will continue to be the principal energy source in this sector for some years to come. Every effort must therefore be made to promote the conservation, regeneration, and efficient use of the country's forest resources.

The task of the energy planner cannot, however, be limited to energy conservation measures. Senegal is still heavily dependent on food imports, and the attainment of self-sufficiency in foodgrain production must consequently be given high priority. This will require not only a proportional increase in the area under cultivation, but also the realization of higher yields on existing farmland, calling in turn for greater energy inputs per hectare for such items as irrigation water, fertilizer, and pesticides. Efficiency in the use of energy dictates that one unit of additional energy be put where it results in the greatest additional output of agricultural product; in other words, the objective should be to maximize the marginal efficiency of energy inputs in agriculture.

Another way to increase the energy use efficiency in the food system is through the reduction of product losses. For example, for every ton of

fish that is lost in storage (due to insect infestation or decomposition), a corresponding amount of energy input into the motorized fishing activity is wasted. Other large losses occur when grain is attacked on the fields by disease, and during storage.

Areas of Concentration

The energy use profiles for the five aspects of the food system analyzed point to the following high potential areas for energy improvement through U.S. assistance. A more detailed description of these areas is given in Chapter Five.

Fish Preservation

Fishing from small motorized craft consumes more than half of all commercial energy used in Senegal's food system. However, losses of fish in transit and storage due to insect infestation and decomposition amount to an estimated 25 percent of the total catch. Examples of projects which could be developed to reduce these losses are: (1) improvement and dissemination of existing models of solar drying equipment; (2) development and installation of appropriate ice-making and cold storage facilities; (3) research into the use of chemicals for fish preservation; and (4) feasibility study of the use of biogas plants to absorb the fish wastes at the large fish processing centers.

Fuelwood Production

Senegal's forest reserves have been seriously depleted in recent years. Yet in the absence of viable alternatives the biomass from forests will remain a principal source of energy for the country in the forseeable future. Examples of possible projects are: (1) improvement and dissemination of low-cost, energy-efficient methods of charcoal making; (2) reorganization of the charcoal industry; and (3) further expansion of existing afforestation and forest management programs.

Fertilizer Production and Use

The increased use of fertilizer planned by the Government of Senegal is a key element in the country's drive towards self-sufficiency in food grains. To encourage farmers to apply chemical fertilizer to their fields, prices are heavily subsidized by the Government; yet other methods of maintaining soil fertility could be practiced to a much greater extent than they are at present. Examples of possible projects are (1) continuing research on nitrogen fixation through non-chemical means; (2) research on improving the rate of direct absorption of phosphate rock by soils; (3) promotion of green manuring and composting practices; and (4) development of less energy-intensive fertilizer manufacturing and distribution systems.

Water Pumping

Irrigation is the second key element of the Government's plans for increased cereal production, particularly with respect to rice and wheat. Because of the terrain, irrigation water must be supplied by pumping in nearly every case. As the rising cost of oil precludes reliance solely on diesel fuel and gasoline to drive these pumps in the future, the Government has placed high priority on developing alternative technologies for pumping water based on locally-available energy resources. Examples of possible future work include: (1) financial support to build and distribute existing models of low-capacity photovoltaic and solar-thermal systems, on a commercial scale; (2) refinement of large-capacity solar plants similar to the design at Bakel; and (3) windmill applications in coastal areas.

Cooking Methods and Equipment

The vast majority of Senegalese households use either wood or charcoal for cooking. Firewood is burnt directly under the cooking pot without the use of a stove, resulting in very low thermal energy efficiency. Examples of promising assistance projects are: (1) improvements in the design of charcoal stoves; (2) design and dissemination of efficient wood-burning

cooking stoves; and (3) further research into the feasibility of introducing biogas plants.

Five other potential areas of concentration for energy improvement have been examined in this study, but were given a lower priority ratings for reasons explained in Chapter Five. These are:

- Household-level grain storage;
- Aflatoxin control;
- Groundnut shell utilization;
- Small mechanical millet processing; and
- Small mechanical rice milling.

The Government of Senegal has for many years recognized the need to develop the country's domestic energy resources. Dozens of governmental and non-government institutions are currently working on energy technology projects, and many of the examples given for possible energy improvement projects represent the continuation and extension of work which is already in progress in Senegal. Under these favorable conditions -- to which should be added the availability of a relatively large body of skilled manpower as compared to other African nations -- Senegal could to some extent become a model for the successful development and implementation of the kind of new venues in energy development which are both necessary and urgent if developing countries are to achieve thier rapid economic development objectives in the face of the global energy situation as it exists today.

The Need for a National Energy Assessment

Even though the recommendations arrived at in this study apply specifically to Senegal, the implications of the work go well beyond. One fundamental point emerging from the study is the utility of the energy use profiles in identifying potential areas for energy improvement. Without the

requisite data on product flows and energy inputs it is difficult to pinpoint the major uses of different forms of energy and the range of alternative methods available to perform a particular process within a country's food system. In the next step the energy implications of projected increases in product output can be assessed. In this manner the national development plans for the agriculture sector can be compared with national plans for energy utilization and, where the two plans are incompatible, the simple model of the energy-product flow chart can help in devising ways to resolve the conflicts. The implications of other changes in the present system, such as population growth, increased per capita demand, and shortages on the international oil market can likewise be explored.

The usefulness of carrying out this type of analysis for the food system alone is, however, limited. Important linkages exist between the different sectors of a national economy, and no one sector can ultimately be treated in a vacuum. This is especially true when its share of the total demand for commercial energy is very small, as is the case with Senegal's food system. Particularly when reviewing opportunities for substituting other forms of energy for oil, one must go beyond the food system to examine the economy in its entirety. Such an examination may also identify opportunities for transferring fuel oil from certain economic sectors, for example heavy industry or electric power generation, to agriculture. These transfers could conceivably be accomplished without reducing total product output in cases where the outlook for fuel substituion or conservation is most favorable.

It is recommended that a national energy assessment along the lines of those that have been conducted at Brookhaven using an accounting scheme called the Reference Energy System2/ or an input-output model containing both energy and product flows, be carried out for Senegal. The experience that has been gained to date in performing such assessments for developing

---

2/ Ann Reisman and Robert Malone, "An Analytical Framework for the Assessment of Energy Resource and Technology Options for Developing Countries," BNL 50800, Brookhaven National Laboratory, Upton, New York, February 1978."

countries has shown the virtual impossibility of attaining even the most basic national development objectives in the near future with current patterns of energy use.3/

The information presented in this study of energy use in the food system would be an important contribution to that effort, even though the energy profile format would in all likelihood have to be adapted to make it compatible with the national model. It should be pointed out, however, that this recommendation in no way diminishes the value of this present study in examining the relationships between Senegal's energy system and the most vital sector of its national economy and in further demonstrating the need to assess other sectors of the economy with a view toward arriving at an integrated national energy policy that is in accord both with economic development goals and with future prospects for the availability and cost of various energy sources. The Government of Senegal has already taken a number of important steps in this direction, and has thereby demonstrated its determination to resolve the difficult problems faced by an oil-importing country striving for rapid economic growth.

3/ Brookhaven has completed national energy assessments for Egypt and Peru. Studies are currently underway at Brookhaven and elsewhere for a number of other developing countries.

ANNEXES

Annex A

GLOSSARY OF INSTITUTIONS

BCEAO — Banque Centrale des Etats de l'Afrique de l'Ouest

The central bank of the West African Monetary Union, headquartered in Dakar. The bank formulates the monetary and credit policies executed by each National Monetary Committee, and issues the monetary union's currency, the CFA franc.

BNDS — Banque Nationale de Développement du Sénégal

The National Development Bank of Senegal, a public bank which is the major source of credit for Senegal's agricultural sector. BNDS extends short- and medium-term credit to farmers for purchases of improved inputs. It also provides funds to ONCAD and SODEFITEX, and to some individual companies as well.

BUD — BUD-Senegal

A subsidiary of BUD-Antle, a California-based vegetable growing company. BUD is developing 4,000 ha for vegetable production (mainly peppers, tomatoes and melons) on Cap Vert, largely for export to European markets.

CCCE — Caisse Centrale de Coopération Economique

A French public institution which provides loans at concessional terms to developing countries. Formerly, the CCCE was a major source of funding for BNDS activities.

CER — Centre d'Expansion Rurale

A rural extension center, one of which is located in each arrondissement (district) in Senegal. The CER is designed to provide technical assistance to the farmer and introduce modern farming practices. Assistance is offered mainly through practical demonstrations by a team of representatives from various government and regional agencies (SODEVA, ONCAD, DGPA, etc.).

CFA — Communauté Financière Africaine

The CFA Franc is the currency of the member states of the West African Monetary Union (UMOA) and is linked to the French Franc at a convertibility rate of 50 CFAF to 1 FF, guaranteed by France.

CFDT Compagnie Française pour la Développement des Textiles

A French company which specializes in the promotion of cotton production in West Africa. CFDT owns a share of SODEFITEX, through which it provides technical assistance for cotton, rice and maize production in the Casamance and Senegal Oriental.

CILSS Comité Inter-états de Lutte contre la Sècheresse dans la Sahel

A regional organization of Sahelian states formed after the last major drought in 1973. CILSS has carried out a number of studies on agriculture, energy, and livestock in the region, in an effort to help member states combat the effects of regional droughts. Some of these studies, and the development projects resulting therefrom, have been financed by the Club du Sahel, an organization made up of CILSS members and 21 bilateral and multilateral donor agencies.

CNRA Centre Nationale de Recherche Agricole

The National Agricultural Research Center, located in the Groundnut Basin at Bambey. The center carries out a wide variety of agricultural research, including field trials for various crops; experiments with post-harvest technology storage, and animal traction; and socio-economic studies.

CPSP Caisse de Péréquation et de Stabilisation des Prix

The Price Stabilization Fund, which rechannels revenue from profitable agricultural activities (mainly cotton and groun nuts) into subsidies for agricultural inputs. It is also used to maintain prices for basic consumer commodities, especially sugar, groundnut oil (domestic consumption), whe flour, and imported rice, as well as for certain refined petroleum products.

CSS Compagnie Sucrière Sénégalaise

The Senegalese Sugar Corporation, a privately-owned company which is developing a sugar plantation and mill in the Fleu region at Richard Toll. Currently CSS mills all sugar consumed in Senegal, although a large part of the raw cane is imported.

DE Direction de l'Energie

The Energy Department, under the direction of the Ministry of Industry. It is mainly concerned with energy policy and

planning for industry, the regulation of energy use, and the direction of the electrical companies. It also participates in the development of various projects related to national energy use.

DEF — Direction des Eaux et Fôrets

The Water and Forestry Bureau, under the direction of MDRH. Eaux et Fôrets is responsible for the management of the country's forest and water resources. Through its Forestry Service, it carries out reforestation programs throughout the country, and also regulates charcoal production and firewood and charcoal marketing.

DGPA — Direction Générale de la Production Agricole

The Bureau of Agriculture under the MDRH. DGPA is responsible for coordinating development programs for the agricultural sector, especially the technical aspects, and also sets objectives, makes credit guidelines, and prepares program budgets. The various parastatal land development agencies (SAED, SODEVA, etc.) coordinate their activities through this Bureau.

DGRST — Délégation Générale (now Secrétariat d'Etat) à la Recherche Scientifique et Technique

The General Delegation for Scientific and Technical Research, now elevated to ministerial status. The DGRST formulates national research policy and oversees and coordinates the activities of the various research organizations in the country (ISRA, IUT, ITA, etc.) It has been active in promoting research on rural energy use and development of non-traditional sources of energy.

EDS — Societe d'Electricite du Sénégal

Senegal's state-owned electrical company. EDS owns the electric power installations and distribution network which are operated under lease by SENELEC.

ENDA — ENDA

A non-profit international organization based in Dakar, but whose activities in the area of environmental training span the third world. ENDA receives support from the United Nations Environmental Programme, the bilateral development assistance agencies of Switzerland and Sweden, and other sources. It operates a "Technology Relay" data bank of information on small-scale technologies appropriate for third world use.

EPT Ecole Polytechnique de Thies

A polytechnical school in Thies. In addition to training technicians, EPT has conducted tests of renewable energy technologies (including solar cookers) in rural village settings in Senegal.

FAC Fonds d'Aide et de Coopération

A French public institution which provides grant and soft term loan aid to developing countries. Among other projects, FAC is funding (in conjunction with USAID) the installation of a solar pump at Bakel.

FED Fonds Européen de Développement

The European Development Fund, an institution of the European Community which provides grant and soft term loan aid to developing countries associated with the EC. FED has funded many projects in Senegal, including the installation of a windmill at l'Ouli.

IPM Institut de Physique Météorologique

A research institute of the University of Dakar, IPM has been conducting applied research on solar pumps, cookers, hot water heaters and fish dryers as part of its established program on solar energy research (now 20 years old). It is partially assisted by SOFRETES, which provides equipment and research assistance.

IRAT Institut de Recherches Agronomiques Tropiques et des Cultures Vivrières

The Research Institute for Tropical Agronomy and Food Crops, a French-based organization which conducts research in a number of African countries. In Senegal, IRAT works through ISRA.

IRHO Institut de Recherches pour les Huiles et Oléagineux

The Research Institute for Oils and Oil Crops, a French-based organization which conducts research in a number of African countries. In Senegal, IRHO works with ISRA, and concentrates largely on groundnuts.

ISRA Institut Sénégalais de Recherches Agricoles

The Senegalese Agricultural Research Institute, which is largely involved in field research. The institute maintains

a number of research stations in various regions of the country, including CNRA in Bambey.

ITA — Institut de Technologie Alimentaire

The Food Technology Institute, a publicly-funded entity which reports to the DGRST and conducts research on food preservation, processing and storage. Recent projects have been concerned with development of millet flour and millet bread, solar food dryers, and windmills for village use.

IUT — Institut Universitaire de Technologie

A technical institute based at the University of Dakar. In addition to training technicians, IUT has been involved in research on solar collectors and small windmills. It is now considering undertaking market research on solar energy in Senegal.

MDRH — Ministère de Développement Rural et d'Hydralique

The Ministry of Rural Development and Water Management, which is responsible for preparing overall development plans for the rural sector and for directing the activities of its several bureaus (DGPA, Livestock, Water and Forestry and Agricultural Engineering).

MPC — Ministère du Plan et de la Coopération

The Ministry of Planning, which formulates Senegal's four-year development plans and coordinates and seeks financing for development projects.

OMVG — Office de la Mise en valeur du Fleuve Gambie

A tri-state regional commission, representing the Governments of Senegal, Gambia, and Guinea, which is engaged in planning projects to exploit the waters of the Gambia River for agriculture and hydroelectric power production.

OMVS — Organisation pour la Mise en Valeur du Fleuve Sénégal

A tri-state regional commission, representing the Governments of Senegal, Mali, and Mauritania, which is concerned with integrated planning and development of a program to exploit the waters of the Senegal River. OMVS has conducted extensive

soil, hydrological, geological, and economic surveys of the river basin, and has plans to construct two dams on the Senegal, one to provide hydroelectric power and irrigation water, the other to control salt intrusion on the river delta.

ONCAD Office National de la Coopération et de l'Assistance pour le Développement

A public enterprise charged with groundnut marketing; importing and distributing rice; providing improved agricultural inputs to farmers; administering agricultural credit; and directing the cooperatives. In line with these duties, ONCAD maintains a large fleet of trucks and a series of regional warehouses and storage centers.

ORANA Organization pour la Recherche sur l'Alimentation et la Nutrition Alimentaire

A regional organization which carries out research in nutrition in West Africa. In Senegal, ORANA has conducted a number of nutrition field surveys, and is also involved in applied nutritional research.

ORSTOM Office de la Recherche Scientifique et Technique Outre-Mer

A French scientific and technical research firm which conducts research in a number of African countries. In Senegal, ORSTROM has carried out a detailed geological survey of soils in some regions of the country, in addition to other scientific and socio-economic studies.

PRS Project Rizicole de Sedhiou

A rice development project at Sedhiou in the Casamance, funded by the World Bank and USAID. Before SOMIVAC was created, PRS also provided technical assistance for groundnut, millet and maize production in the region, operated the rice mill at Sefa for ONCAD, and purchased rice on ONCAD's account.

SAED Societe d'Aménagement et d'Exploitation des Terres du Delta

A parastatal agency created in 1965 to develop rice and other irrigated crops in the Senegal River Valley. In addition to managing the irrigated perimeters, SAED distributes improved agricultural inputs and markets rice and other crops for the account of ONCAD. It also runs the rice mills at Ross-Bethio and Richard Toll.

SATEC Société d'Aide Technique et de Coopération

A French semi-public consulting firm specializing in extension service activities in developing countries. In Senegal, SATEC has provided assistance to SODEVA in the Groundnut Basin, to SAED and ONCAD, and to several rice projects in the Casamance.

SEIC Société Electrique et Industrielle de Casamance

One of Senegal's five groundnut oil processing firms, which also produces and sells electricity to the city of Ziguinchor in the Casamance. The SEIC electricity concession is scheduled for transfer to SENELEC within the next few years.

SENELEC Société Sénégalaise de Distribution d'Energie Electrique

A joint stock company (50 percent state-owned) which operates most of Senegal's electric power installations. SENELEC is responsible for maintaining the distribution network and formulating plans for electrical energy infrastructure. It is also involved in running a rural experimental energy project in Louga, using solar energy and biogas.

SIES Société Industrielle d'Engrais au Sénégal

A fertilizer company largely run by a European consortium, but with part Senegalese ownership. SIES manufactures blended fertilizers from local phosphate and imported materials. It supplies mainly the domestic market, but exports any surpluses to neighboring countries, mainly Mali and the Ivory Coast.

SINAES Société Industrielle des Applications de l'Energie Solaire

A Senegalese firm jointly owned by public and private interests in Senegal and France. SINAES was created to fabricate and install solar equipment in Senegal. It receives technical and personnel support from IPM, and eventually plans to become involved in the manufacture and distribution of solar-thermal pumps on a commercial scale. It is currently monitoring the progress of pumps installed in four villages in Thies and Fleuve in 1976, and is also involved with SOFRETES and an American firm (Thermo-Electron) in the solar irrigation pumping experiment at Bakel.

SISCOMA Société Industrielle Sénégalaise de Constructions Mécaniques et de Matériels Agricoles

A Senegalese company (50 percent state-owned) which manufactures agricultural equipment for domestic and regional

export markets. Most of the animal-drawn implements used in Senegal were developed and tailored to local conditions by SISCOMA with assistance from researchers at CNRA. Reportedly, SISCOMA would also like to become involved in manufacturing solar-powered pumps.

SOCAS Société de Conserves Alimentaires du Sénégal

A company in the Fleuve region which manufactures tomato paste for domestic consumption. The tomatoes are grown as a second crop on the irrigated perimeters.

SODAGRI Société de Développement Agricole et Industriel du Sénégal

A semi-public enterprise which is studying the possibilities of developing irrigated rice production on a large scale in the Casamance. SODAGRI wants to develop 30,000 ha of irrigated land, modeled on the perimeters in the Fleuve, to grow rice and other crops using mechanized inputs. Due to various problems, however, the project has not yet begun.

SODEFITEX Société de Développement des Fibres Textiles

A parastatal land development agency partially owned by CFDT. SODEFITEX is charged with developing cotton production in the Senegal Oriental region, and also provides technical assistance and improved inputs for the development of rainfed rice and maize in Senegal Oriental and the Upper Casamance. SODEFITEX gins the cotton in its own mills, and exports most of the output.

SODEPA Société pour le Développement de la Pêche Artisanale

A development agency created by the Directorate of Fisheries in 1975 to organize and assist the artisanal fishing cooperatives.

SODESP Société pour le Developpement de l'Elevage dans la Zone Sylvo-Pastorale

The development agency charged with the development of livestock raising and marketing in the sylvo-pastoral zone of north and central Senegal. SODESP is interested in installing solar pumps on some of its forage wells in this region.

SODEVA Societe de Développement et de Vulgarisation Agricole

A parastatal land development agency in charge of agricultural development programs in the Groundnut Basin. SODEVA

provides technical assistance for groundnut, millet, sorghum and maize production. It has been involved in a long-term program to raise agricultural productivity in the Groundnut Basin, largely through the introduction of animal traction, improved inputs, and better farming techniques.

SOFRETES Société Française d'Etudes Thermiques et d'Energie Solaire

A French company involved in research, development, and manufacture of solar equipment and technologies. In Senegal, SOFRETES pump sets have been installed in several rural villages. SOFRETES also has a 15-percent share in SINAES, with which it is engaged in several cooperative ventures.

SOMIVAC Société de la Mise en Valeur de la Casamance

The recently created parastatal land development agency for the Casamance region. SOMIVAC is charged with raising yields and area planted to rice, and also provides assistance to maize producers. In addition, SOMIVAC is involved in the construction of storage and milling facilities for rice in the Casamance.

SONACOS Société Nationale des Oléagineux du Senegal

A mixed enterprise (65 percent owned by the state, 35 percent by the oil mills) which purchases groundnuts from ONCAD, coordinates delivery to the processing plants, and markets the processed oil and oil cake.

SONED Société Nationale des Etudes de Développement

A public enterprise which acts as a consulting firm for the Senegalese Government. SONED has produced a number of good quality studies, dealing with grain marketing, industrial organization, transport and related subjects on which information has been needed for national policy making.

SOSAP Société Sénegalaise d'Armement de Pèche

A semi-public Senegalese enterprise engaged in commercial fishing for processing and export.

STN Société des Terre Neuves

A public enterprise which directs the resettlement schemes (the Terres Neuves, or "New Lands") in the southeastern part

of Senegal. Its responsibilities include assistance in the development of new villages and provision of technical advice on agriculture.

UMOA — Union Monetaire Ouest Africaine

The West African Monetary Union, composed of six West African countries (Senegal, Upper Volta, Togo, Niger, Ivory Coast, and Dahomey) which share a common central bank and currency.

Annex B

REFERENCE BIBLIOGRAPHY

Aubray, Roger, The Fisheries of Senegal: A Comprehensive Study, Rome: FAO, 1977.

Ba, Moctar, Petit Périmètre Irrigué sur le Fleuve Senegal: Le Cas de l'Aménagement de la Cuvette de Pété, Environmental Training Programme Occasional Papers, Dakar: ENDA, May 1977.

Banque Centrale des Etats de l'Afrique de l'Ouest, "Indicateurs Econoquest Sénégalais," Indicateurs Economiques, No. 241, July 1976.

Brace Research Institute, Final Report on the Feasibility of the Establishment of a Rural Energy Centre in Senegal, Nairobi: United Nations Environmental Programme, August 1976.

Checchi and Company, "Senegal Field Trip Notes, October 19 - November 3, 1978."

CILSS/Club du Sahel, Energy in the Development Strategy of the Sahel, October 1978.

de Sapir, Olga Linares, "Agriculture and Diola Society," in Peter F.M. McLoughlin (editor), African Food Production Systems, Baltimore: John Hopkins Press, 1970.

Del Waulle, T.C., et Y. Roederer, 'Le bois de fers à Niamey," in Bois et Fôrets des Tropiques, 152: 15-60.

Floor, W.M., The Energy Sector of the Sahelian Countries, The Hague: Netherlands Ministry of Foreign Affairs, April 1977.

Food and Agriculture Organization, Agricultural Commodity Projections, 1970-1980, Rome: FAO, 1970.

_____, Production Yearbook, 1976, Rome: FAO, 1977.

Freeson, Sylviane, Village Participation in Pump Irrigation Areas in the Matam Zone in Senegal, Experiments in Rural Development Special Document No. 4, Paris: OECD Development Center, April 1978.

Gellar, Sheldon, The Politics of Development in Senegal, Ph.D. Thesis, Columbia University, 1967. Reprinted by University Microfilms, Ann Arbor, Michigan.

Glantz, Michael H., ed., The Politics of Natural Disaster, The Case of the Sahel Drought, New York: Praeger Publishers, 1976.

Annex B (Cont'd)

Howe, James W., et al, Energy for the Villages of Africa: Recommendations for African Governments and Outside Donors, Washington: Overseas Development Council, 1977.

International Bank for Reconstruction and Development, Miscellaneous Internal Documents, 1972-1978.

_____, Urban Growth and Economic Development in the Sahel, World Bank Staff Working Paper No. 315, Washington: IBRD, 1979.

_____, World Development Report. Washington: IBRD, August 1979.

International Fertilizer Development Center, West Africa Fertilizer Study, Volume Two: Senegal, Florence, Alabama: IFDC, 1977.

International Monetary Fund, Surveys of African Economies, Volume Three: Dahomey, Senegal, Togo, and Upper Volta, Washington: IMF, 1970.

Keita, et al., "Generateur Photovoltaique Appliqué au Pompage de l'Eau en Zone Isolée," in Annales de la Faculté des Sciences, Annee 1977, Dakar: University of Dakar, 1977.

Laplanche, J.Y., and Neumann, L.L., Elements de Calcul du Coûts des Façons Culturales Effectuées par une Colonne de Chenillard SAED, Saint Louis: SAED, 1977.

Leach, Gerald, Energy and Food Production, Surrey, U.K.: Science and Technology Press, 1976.

L'Energie Electrique au Senegal," Courants, No. 3, Fourth Trimester, 1976.

Loose, Edna E., "Women in Rural Senegal: Some Economic and Social Observations," a paper prepared for the Workshop on Sahelian Agriculture, Purdue University, February 1-2, 1979.

Louis Berger, Inc., and ORGATEC, Senegal Highway Maintenance Study, Dakar: Louis Berger, 1972.

Morris, W.H.H., et al, "Papers Presented at Workshop on Sahelian Agriculture," Department of Agricultural Economics, Purdue University, February 1-2, 1979.

Nelson, Harold D., et al., Area Handbook for Senegal, Washington: Foreign Area Studies Division of American University, 1974.

Norbert Beyrard France, Programme Integré de Developpement du Bassin du Senegal, Saint Louis: OMVS and UNDP, 1974.

Annex B (Cont'd)

Overseas Development Council, Operation Energie Renouvelable, A Five-Year Program to Strengthen Senegal's Capacity to Conduct a Test of the Potential of Renewable Energy Technologies for Rural Development, Washington: Agency for International Development Project Identification Document (PID), March 1978.

Pales, Leon, L'Alimentation en A.O.F. Milieux - Enquêtes - Techniques - Rations. Mission Anthropologique de l'Afrique Occidentale Française, Dakar: ORANA, 1954.

Pieri, C., Rentabilité de la Fumure Potassique de Quelques Céréales du Culture Sèche au Sénégal, Bambey: ISRA-CNRA, 1976.

Palmedo, P. F., et al., Programmatic Areas for U.S. Assistance for Energy in the Developing Countries, BNL 50890, Brookhaven National Laboratory, Upton, New York, December 1978.

Ratheaux, Oliver, Les Flux et les Moyens de Transport de Marchandises au Sénégal, Dakar: Ministere des Travaux Publiques, de l'Urbanisme et des Transports, Bureau d'Etudes, May 1971.

Reisman, Ann, and Robert Malone, An Analytical Framework for the Assessment of Energy Resource and Technology Options, BNL 50800, Brookhaven National Laboratory, Upton, New York, February 1978.

Reizer, C., and G.L. Chevalier, Effects on the Fishery of the Hydro-Management on the Senegal River, 1972.

Republique Française, Ministere de la Cooperation, Memento de l'Agronome. Techniques Rurales en Afrique. Paris: 1974.

Republic of Senegal, Delégation Generale à la Recherche Scientifique et Technique, La Technologie Energetique et la Production Alimentaire, Dakar: Institut de Technologie Alimentaire, November 1978.

_____, Les Activités en Technologie Alimentaire de l'Institut de Technologie Alimentaire de Dakar, Dakar: Institut de Technologie Alimentaire, July 1978.

_____, Ministere du Plan et de la Cooperation, Evolution et Perspectives du Secteur Rural dans le Cadre de la Préparation du Ve Plan Quadriennal, Dakar: 1976.

_____, Fifth Four-Year Development Plan, Dakar: 1977.

_____, Ministère de Développement Rurale et d'Hydralique, Food Investment Strategy, 1977-1985, Dakar: February 1977.

_____, Resultats Généraux de la Pêche Maritime Sénégalaise, 1977, Dakar: June 1978.

Annex B (Cont'd)

Republic of Senegal, Ministère de Développement Rurale et d'Hydralique, Programme Technique, Réalisation de la Campagne 1977-1978 et Objectifs de la Campagne 1978-1979, Dakar: SODEVA, July 1978.

_____, Programme Technique. Realisation de la Campagne 1976-77. Objectifs de la Campagne 1977-78, Dakar: SODEVA, June 1977.

_____, Secrétariat d'Etat aux Affaires Etrangères, Direction de l'Aide au Développement, Bureau des Programmes, Aperçu des Problèmes de Développement au Sénégal, September 1974.

Rodts, R., Analyse Economique pour un Programme de Développement Hydro-agricole, Saint Louis: OMVS, December 1972.

"Senegal 1960-1973, 14 Years of Economic and Social Development," Marchés Tropicaux et Méditerranéens, No. 1493, June 21, 1974.

"Senegalese Industry," Marchés Tropicaux et Méditerranéens, No. 1684, February 17, 1978.

Smith, Wesley G., Etude Engrais au Sénegal, (trans. J.R. Mercier), Dakar: SODEVA, May 1975.

Societé Nationale des Etudes de Développement, Etude sur la Commercialisation et la Stockage des Cereales au Sénegal, Dakar: SONED, 1977.

_____, Les Activités du Secteur Economique Moderne au Sénégal en 1974 et 1975 d'après les Resultats du Recensement Général des Entreprises, Dakar: SONED, 1977

_____, Loi Programme Agricole Bilan Diagnostique: Analyse des Systèmes de Production Agricole et Prospectives Etude Analytique des Différentes Structures de Développement Rural. Dakar: SONED, July 1977.

Societe Senegalaise de Distribution d'Energie Electrique, Rapport Annuel, Exercise 1977, and miscellaneous internal documents.

Spencer, W.P , et al., Recommendations for Grain Storage and Preservation in Senegal, Manhattan: Kansas State University, Food and Feed Grain Institute, Report No 54, November 1975.

Steedman, Charles, The Energy Situation in Senegal (Preliminary Draft), Ann Arbor: University of Michigan Center for Research on Economic Development, May 1979.

Annex B (Cont'd)

Trần Minh Duc, Pompe Solaire: Premiers Résultats de Contrôle du Débit de Pompage, Dakar: ISRA, 1979.

Uhart, Edmond, Projet de Rapport sur les Problèmes du Charbon du Bois au Sénegal, Addis Ababa: United Nations Economic Commission for Africa, 1976

Ulinski, Carol A.,"Trip Report, Senegal Renewable Energy Project," submitted to Special Development Problems Division, Office of Development Resources, Bureau for Africa, Agency for International Development, November 30, 1978.

United Nations, Commodity Trade Statistics, Vols XX to XVI, New York: U.N. Statistical Office, 1970-1976.

_____, World Energy Supplies, 1950-1976, New York: U.N. Statistical Office, 1978.

U.S. Agency for International Development, Annual Budget Submission, FY 1980, Senegal, Washington: June 1978.

_____, Casamance Regional Development Project Paper, AID/Washington: April 1978.

_____, Bakel (Senegal) Solar Pump Project Paper Amendment, Washington: March 9, 1978.

_____, Evaluation of the Senegal Cereals Project, Washington: April 1977.

_____, Senegal Grain Storage Project Paper, Washington: May 1977.

_____, "Senegal: Macro-Economic Assessment," in Development Assistance Program, FY 1975, Section Three: Senegal, Mali, Mauritania, Washington: March 1975.

U.S. Department of Commerce, Industry and Trade Administration, Foreign Economic Trends and Their Implications for the United States: Senegal, Washington: February 1978.

University of Michigan, Center for Research on Economic Development, Marketing, Price Policy and Storage of Food Grains in the Sahel: A Survey, Ann Arbor: CILSS/Club du Sahel, August 1977.

_____, "Working Papers for a Renewable Energy Project in Senegal," March 1979.

Annex B (Cont'd)

Vǎn Chi, Régine Nguyễn, l'Economie Maritime et Rurale de Kayar, Village Senegalaise--Problèmes de Développement, Dakar: IFAN, 1967.

Waldstein, Abraham S., Government Sponsored Agricultural Intensification Schemes in the Sahel: Development for Whom?, Washington: 1978.

West African Rice Development Association and Stanford Food Research Institute,"The Political Economy of Rice in West Africa" and unpublished data from field surveys conducted for project funded under USAID contract AID/afr-C-1235.

Yaciuk and Yaciuk, Discussions des Résultats de l'Enquête sur la Technologie Post-récolte en Milieu Paysan au Sénégal, Dakar: ISRA, November 1977.

Zalla, Tom, et al., Economic and Technical Aspects of Fertilizer Production and Use in West Africa, African Rural Economy Program Working Paper No. 22, Florence, Alabama: International Fertilizer Development Center and Department of Agricultural Economics, Michigan State University, September 1977.