BIBLIOGRAPHIC DATA SHEET

1. CONTROL NUMBER	2. SUBJECT CLASSIFICATION (695)
PN-AAJ-192	DM00-0000-0673

3. TITLE AND SUBTITLE (240)

Report on transmission requirements, Ketenger system

4. PERSONAL AUTHORS (100)

5. CORPORATE AUTHORS (101)

Main (Charles T.) International, Inc.

6. DOCUMENT DATE (110)	7. NUMBER OF PAGES (120)	8. ARC NUMBER (170)
	47p.	ID621.31.M224h

9. REFERENCE ORGANIZATION (130)

Main

10. SUPPLEMENTARY NOTES (500)

11. ABSTRACT (950)

12. DESCRIPTORS (920)

Electric power
[illegible], Indonesia
[illegible] analysis
[illegible]tric power generation
Projection
Indonesia
Power transmission
Economic analysis

13. PROJECT NUMBER (150)

497021300

14. CONTRACT NO.(140)

AID/asia-C-1357

15. CONTRACT TYPE (140)

16. TYPE OF DOCUMENT (160)

MAIN

CHAS. T. MAIN, INC.

REPORT ON

TRANSMISSION REQUIREMENTS

KETENGER SYSTEM

1.0 INTRODUCTION

Aid loan PDJ 046 TST-72 calls for the establishment of double circuit 150 kV transmission (two circuits strung initially) in the Ketenger system from Pekalongan to Cilicap a distance of about 120 miles (193 km). The Federal Republic of Germany (FRG) which is also providing financial assistance to the GOI for the development of the electrical sector in Central Java, is planning to construct 150 kV double circuit transmission (only one circuit strung initially) from the Samarang load area to Pekalongan to interconnect the Tuntang and Ketenger systems of Central Java. The FRG also plans to finance a second 150 kV tie between the Tuntang and Ketenger systems extending from Magelang to Purwokerto-a distance of 74 miles (119 km). This transmission which will consist of double circuit towers with one circuit strung initially, will also be used to incorporate the Garung hydro plant.

An analysis is made to (a) review long-term transmission requirements for Ketenger (b) determine economics of alternate transmission development plans and (c) make recommendations on the immediate transmission requirements corresponding to the least cost future expansion.

The analysis considers the effect on transmission requirements of the recommended 150 kV interconnection between the West Java and Central Java systems. This interconnection which will be in service by 1977 extends from the Cirebon area to Tegal and comprises of double circuit towers with two circuits strung initially.

2.0 DEFINITION OF ALTERNATIVES

In describing the alternative tower configurations considered in the report, the following nomenclature will be used.

DT(DC)	Double circuit towers - two circuits strung
DT(SC)	Double circuit towers - one circuit strung
ST	Single circuit towers

The following two alternative transmission schemes are considered for initial implementation in 1977 (See Exhibits 1 and 2).

Alternative A. DT(DC) transmission extending from Samarang-Timur to Cilicap via Pekalongan, Tegal and Purwokerto. Garung hydro is incorporated over DT(SC) transmission to Magelang.

Alternative B. DT(SC) transmission from Samarang-Timur to Purwokerto. DT(SC) transmission from Magelang - Purwokerto via Garung and DT(DC) from Purwokerto to Cilicap.

The DT(DC) transmission Purwokerto - Cilicap is common to both alternatives.

Transmission requirements beyond 1977 are then developed for each of the two above alternatives and an economic analysis made of these two developments to determine the least cost transmission expansion scheme. The analysis also considers the possible initial development of Alternative B with ST instead of DT(SC).

3.0 COST ESTIMATES

The following cost estimates are used in the economic analysis of the alternate transmission developments.

3.1 Transmission Lines

Transmission costs for the Ketenger transmission could vary appreciably depending on procurement policies. For the purpose of this analysis the following range of costs apply.

$/mile

	US Procurement	Procurement of tower steel from India
DT(DC)	55,000	40,000
DT(SC)	42,500	31,000
ST	34,200	25,000

The cost of adding the second circuit on a DT(SC) line at some later date is estimated to be $11,000/mile.

3.2 Substations

For the purpose of this analysis, all substations are assumed developed with standard main-and-transfer bus schemes. The cost of a 150 kV feeder position is assumed to be $150,000.

4.0 ALTERNATIVE TRANSMISSION EXPANSION SCHEMES

Load flow analyses outlined in the attached Appendix demonstrate the requirement for the following future transmission additions for Alternatives A and B defined in Section 3 (only uncommon facilities are indicated).

Case 1 Generation in Cilicap area

(a) Expansion Scheme A

1977 - DT(DC) Samarang Timur - Tegal - Purwokerto (146 miles - 235 km).
1989 - DT(DC) Garung - Purwokerto (48 miles - 77.5 km)

(b) Expansion Scheme B

1977 - DT(SC) Samarang Timur - Tegal - Purwokerto
- DT(SC) Garung - Purwokerto

1977 - 1980 - Add second circuit on DT(SC) Samarang Timur - Tegal (91.5 miles - 147 km).

1989 - Add second circuit on:
(a) Garung - Purwokerto (48 miles - 77.5 km)
(b) Tegal - Purwokerto (54.8 miles - 88 km)

By 1989, Schemes A and B will have the same transmission facilities.

The above schemes were developed on the following basis:

(a) Transmission should be adequate for the transfer of 50 MW from Central Java to West Java or from West Java to Central Java up to 1984. After 1984, the transfer capacity is increased to 100 MW in either direction. A transmission outage of one critical circuit is assumed in the analysis. Due to the very high isokeraunic level in the wet season, this is considered a minimum contingency requirement.

(b) Generation will be developed in the Cilicap area with about 100 MW available in 1984.

The requirement for transmission in 1977-1980 in Expansion Scheme B is dictated by very poor voltage conditions resulting from the loss of any section of the Semarang - Tegal transmission while delivering 50 MW from Central Java to West Java over the circuitous route Samarang - Djelok - Magelang - Purwokerto - Tegal (183 miles - 294 km).

The analysis shows that if generation is not developed in the Cilicap area, the following sequence of transmission additions will be required for the period after 1977.

Case 2 No Generation in Cilicap area

(a) Expansion Scheme A

1984 - DT(DC) Garung - Purwokerto (This represents an advancement from 1989 to 1984)

(b) Expansion Scheme B

1984 - Add second circuit on Garung - Purwokerto DT(SC) line

5.0 ECONOMIC ANALYSES

Exhibits 3 and 4 show investment costs for base cases 1 and 2 outlined in Section 4. The second circuit Semarang - Timur to Tegal is assumed required in 1980. The present worth of investments for both cases computed at discount rates of 12 and 15% - the range of opportunity cost of capital in Indonesia - is shown below.

	$\$ \times 10^3$ Present Worth @ Discount Rate of 12%	15%
Case 1 (Generation at Cilicap)		
Scheme A	11,882	11,656
" B	12,070	11,834
Difference in favor of "A"	188	178
Case 2 (No generation at Cilicap)		
Scheme A	12,510	12,270
" B	12,231	12,000
Difference in favor of "B"	(281)	(270)

Advancement of the requirement for the second circuit Semarang Timur - Tegal to 1977 would increase the cost of Scheme B as shown below.

	$\$ \times 10^3$ Present Worth @ Discount Rate of 12%	15%
Case 1 (a)		
Scheme A	11,882	11,656
" B	12,710	12,589
Difference in favor of "A"	828	933

A comparison was also made of the economics of base Case 1 assuming transmission costs based on procurement of tower steel from India. The following applies -

	$ x 10^3 Present Worth @ Discount Rate of 12%	15%
Case 1 (b)		
Scheme A	9,498	9,322
" B	9,830	9,595
Difference in favor of "A"	332	273

If Scheme B is developed using ST transmission, the resultant investments are shown in Exhibit 5 and the present worth of costs are shown below.

	$ x 10^3 Present Worth @ Discount Rate of 12%	15%
Case 3		
Scheme A	11,882	11,656
" B	12,575	12,060

The above analysis shows that provided generation is installed in the Cilicap area by 1984, Scheme A is less expensive than Scheme B. The economic advantage of Scheme A over B is not significant if the second circuit Semarang Timur - Tegal is delayed to 1980 in Scheme B. However, it would not be prudent to operate with one circuit from Semarang Timur - Tegal for the following reasons.

(a) Voltage conditions during the emergency loss of any one line section Semarang - Tegal will be very poor resulting in possible loss of load.

(b) Stability of the interconnected West Java Central Java system will not be retained for faults on the single circuit Samarang - Tegal transmission while transferring 50 MW from Central Java to West Java.

The above reasons dictate the concurrent requirement for two circuits between Semarang and Tegal. This early requirement for the second circuit enhances the relative economy of Scheme A (See Case 1 (a).

The analysis also shows that the use of DT(SC) instead of ST in

Scheme B results in the least present worth of costs (Compare Case 3 with Case 1).

Although Case 2 shows an economic advantage for Scheme B, it is considered very unlikely that generation will not be developed in the Cilicap area by 1984. The proximity to a readily available source of fuel - the Pertamina refinery - and the ideal harbor and siteing conditions in the Cilicap area strongly favor the development of steam generation in that area.

6.0 RECOMMENDATIONS

Considering the economic evaluation outlined in Section 5 and the system requirement for a "strong" interconnection between the West Java and Central Java systems, it is recommended that two circuits be provided from Tegal - Samarang in 1977. The adoption of DT(DC) towers results in optimum economy.

The extension of DT(DC) transmission to Cilicap also represents the least cost solution and is therefore recommended for implementation in 1977.

Garung hydro should be incorporated over DT(DC) radial transmission to Magelang.

Loads along the Magelang - Garung - Purwokerto route can be supplied at 20 kV over distribution lines from 150/20 kV substations at Garung and Purwokerto By 1984, the Garung - Purwokerto link will be closed and new 150/20 kV substations could be developed to supply increased loads in the area.

Economic Analysis of Alternate Schemes

Case 1

	Investment $ x 10^3	
	Scheme A	Scheme B
- 1977		
Transmission		
-146 mi. @$55,000	$ 8,050	
-146 mi. @$42,500		$ 6,220
- 48 mi. @$42,500		2,040
Substations		
- 20 fdr position	3,000	
- 12 fdr position		1,800
	$11,050	$10,060
-1980		
Transmission		
- 91.5 mi. @$11,000	-	1,005
Substations		
-8 fdr positions	-	1,200
		$ 2,205
-1989		
Transmission		
- 48 mi. @$55,000	2,640	
- 48 mi. @$11,000		528
- 54.8 mi. @$11,000		604
Substations		
-4 fdr position	600	
-4 fdr position		600
	$ 3,240	$ 1,732

Exhibit 3

Economic Analysis
of Alternate Schemes
Case 2

	Investment $ x 10^3	
	Scheme A	Scheme B
-1977		
(Same as Case 1)	$11,050	$10,060
-1980		
(Same as Case 1)	-	2,205
-1984		
Transmission		
-48 mi. @$55,000	2,640	
-48 mi. @$11,000		528
Substations		
- 4 fdr position	600	
- 2 fdr position		300
-1989		
Transmission		
-54.8 mi. @$11,000		604
Substations		
2 fdr position		300

ECONOMIC ANALYSIS

of Alternate Schemes

Case 3

	Investment $ x 10^3	
	Scheme A	Scheme B
-1977		
- Transmission		
-146 mi. @$55,000	8,050	
-146 mi. @$34,200		5,000
- 48 mi. @$34,200		1,640
-Substations		
- 20 fdr position	3,000	
- 12 fdr position		1,800
	11,050	8,440
-1980		
-Transmission		
-91.5 mi. @$34,200		3,130
-Substations		
8 fdr position		1,200
		4,330
-1989		
-Transmission		
-48 mi. @$55,000	2,640	
-48 mi. @$34,200		1,640
-54.8 mi. @$34,200		1,870
-Substations		
- 4 fdr position	600	
- 4 fdr position		600
	3,240	4,110

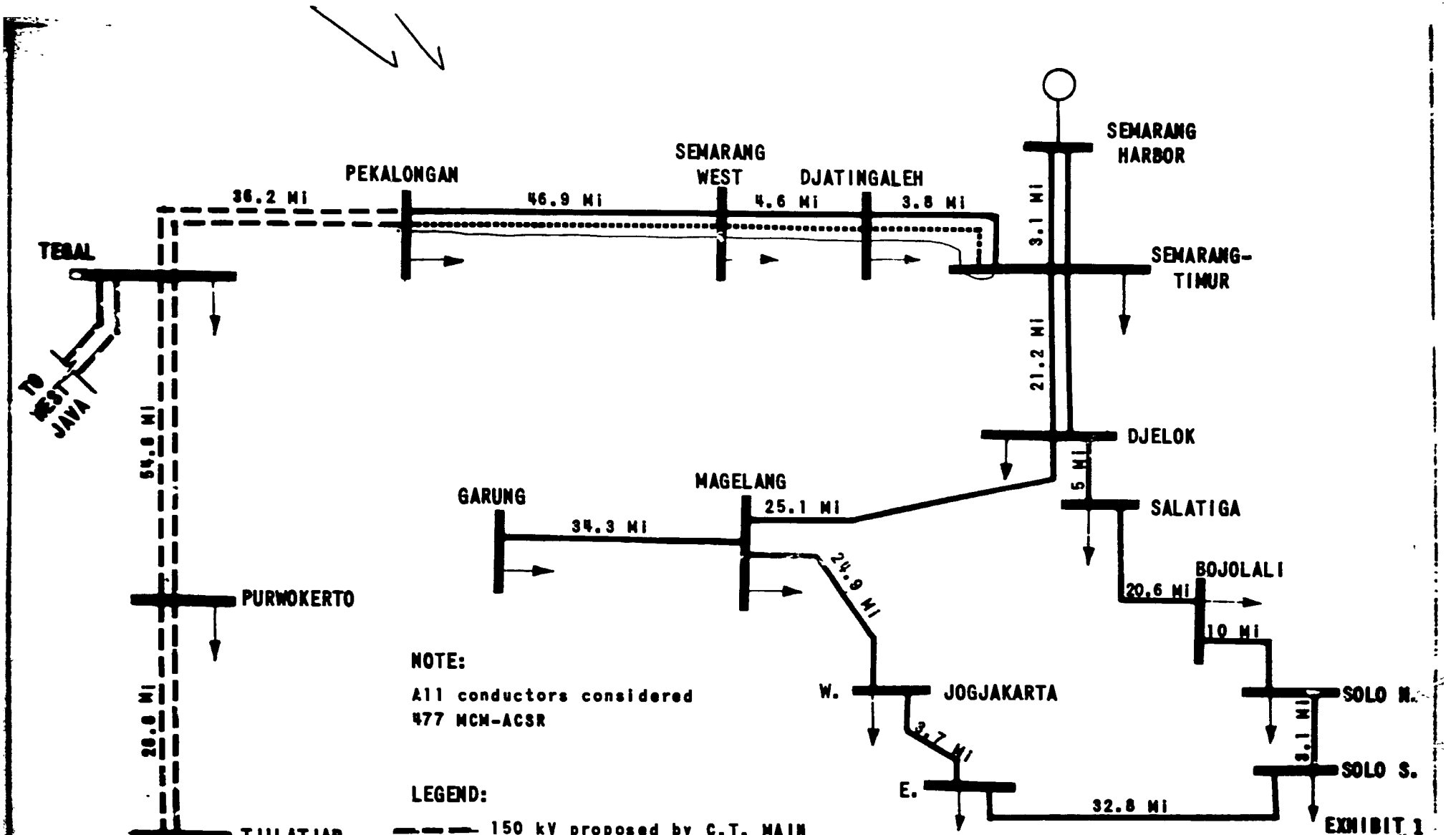

BEST AVAILABLE COPY

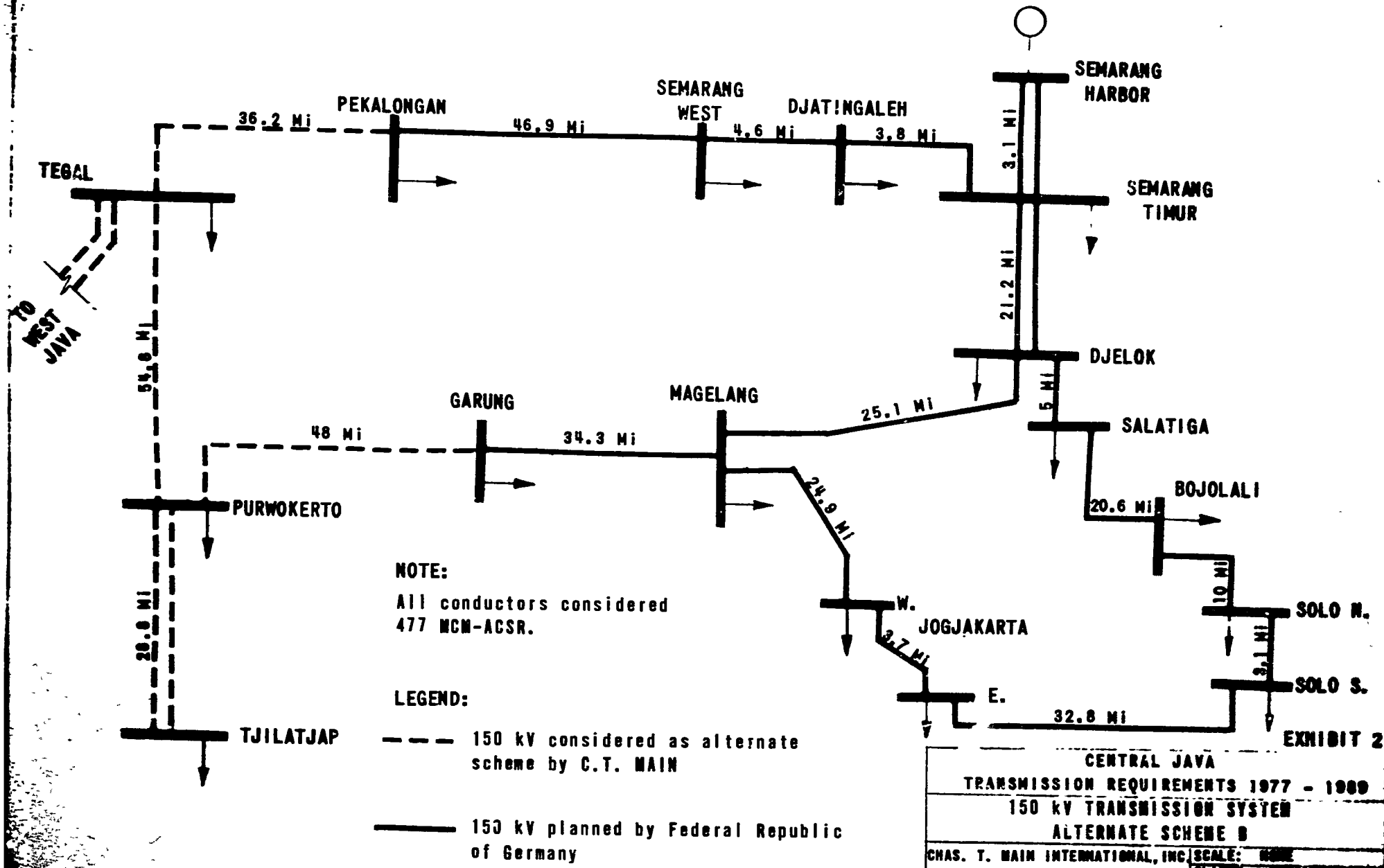
SEMARANG HARBOR
SEMARANG TIMUR
DJELOK
SALATIGA
BOJOLALI
SOLO N.
SOLO S.
E.
W.
JOGJAKARTA
MAGELANG
GARUNG
PURWOKERTO
TJILATJAP
TEGAL
PEKALONGAN
SEMARANG WEST
DJATINGALEH
TO WEST JAVA
36.2 Mi
46.9 Mi
4.6 Mi
3.8 Mi
3.1 Mi
21.2 Mi
5 Mi
25.1 Mi
48 Mi
34.3 Mi
24.9 Mi
20.6 Mi
10 Mi
3.1 Mi
3.7 Mi
32.8 Mi
54.8 Mi
28.8 Mi
NOTE:
All conductors considered 477 MCM-ACSR.
LEGEND:
150 kV considered as alternate scheme by C.T. MAIN
150 kV planned by Federal Republic of Germany
EXHIBIT 2
CENTRAL JAVA
TRANSMISSION REQUIREMENTS 1977 - 1989
150 kV TRANSMISSION SYSTEM
ALTERNATE SCHEME B
CHAS. T. MAIN INTERNATIONAL, INC.
BOSTON MASSACHUSETTS
CHARLOTTE NORTH CAROLINA
SCALE: NONE
CLIENT JOB
2091 404

APPENDIX

Load Flow Analyses

Load flow studies were conducted to determine the capabilities of the two alternate transmission system developments outlined in Section 2. The study extended over a 12 year period 1977 - 1989. Summaries of the load flow cases run in the study are shown in Exhibits A, B and C. Flow and voltage conditions for each case represented in Exhibit A are also attached.

Key load flows which influence the development of the alternate transmission schemes described in Section 2 of the report are described below.

Alternate A.

Test A - 8 — 1984 load level and 100 MW delivery to West Java, no generation at Cilicap, and contingency loss of one Pekalongan-Semarang circuit. Voltages in the Ketenger system are unacceptably low.

Test A - 13 — Same as A - 8 but with one circuit Garung-Purwokerto in-service. Voltages and flows throughout the system are adequate.

Test A - 12 — Same as A - 8 but with generation in Cilicap. Contingency loss of one Purwokerto - Tegal circuit. Voltages and flows throughout the system are adequate.

The above tests show that without generation in the Cilicap area, a second transmission connection between the Tuntang and Ketenger systems is required on or before 1984

Alternate B.

Test B-3 — 1977 loads and 50 MW delivery to West Java. Contingency loss of Pekalongan - Semarang West transmission. Voltages in the Central Java system are inadequate. Stability of the interconnected system is marginal due to large angles between Samarang and Jakarta generation.

This test defines the requirement for a second circuit between Tegal and Semarang in the early stages of development of the Ketenger 150 kV transmission system.

Transmission requirements for 1989 were developed using engineering judgement. The transmission additions resulted in the same number of circuits for both alternatives A and B.

CENTRAL JAVA

TRANSMISSION REQUIREMENTS 1977 - 1989

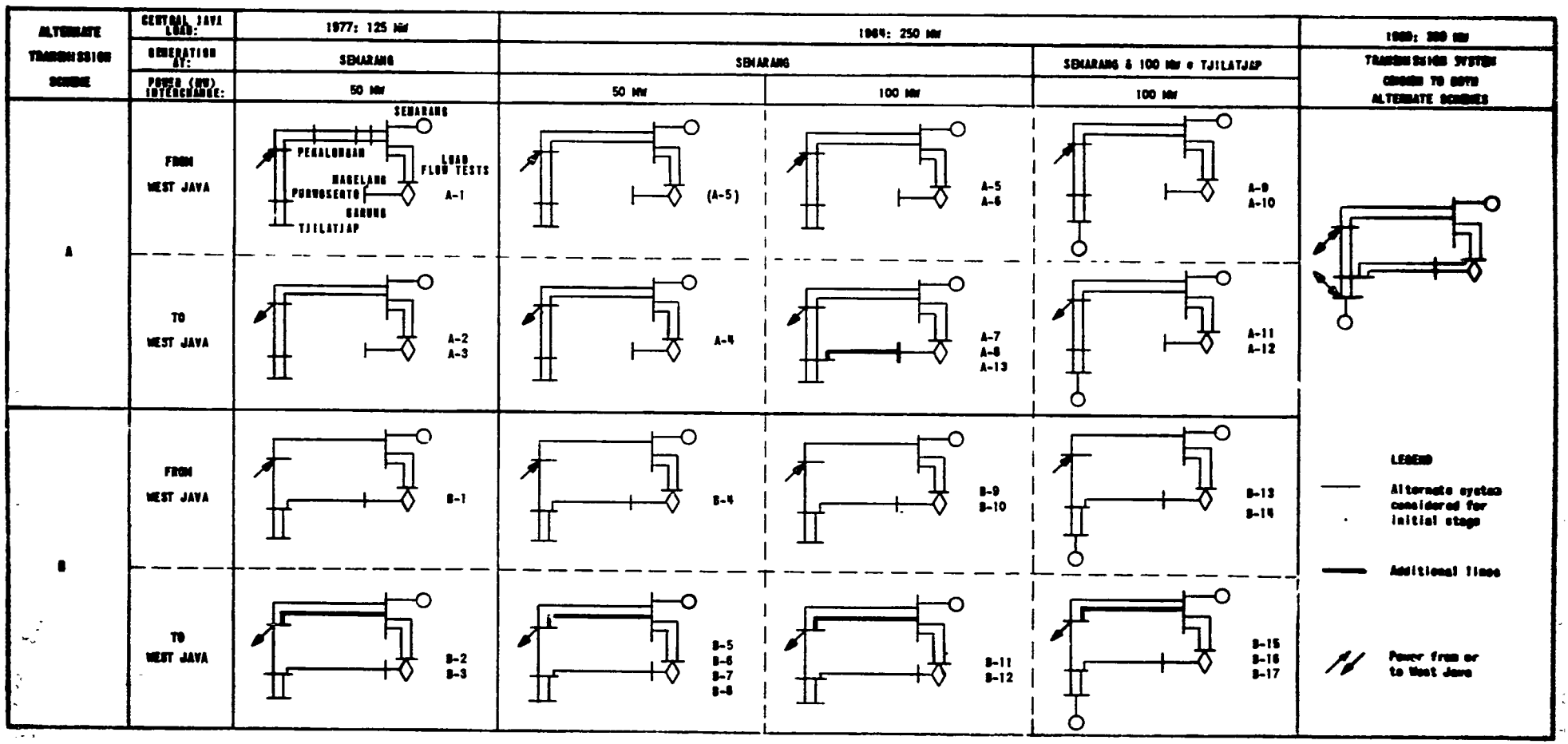

EXHIBIT A

CENTRAL JAVA
TRANSMISSION REQUIREMENTS 1977 - 1989
LOAD FLOW TESTS
ALTERNATIVE A

TEST NO. A-	DESCRIPTION						RESULTS		
	LOAD LEVEL	GENERATION	POWER INTERCHANGE WITH WEST JAVA			TRANSMISSION LINES NORMAL: ALL LINES IN SERVICE OUT: ONE SINGLE LINE OUT OF SERVICE	SYSTEM PERFORMANCE g=good a=acceptable i=inadequate	LINES LOADED h = heavy m = medium l = light	MINIMUM BUS VOLTAGE - KETENGER SYSTEM
			MW	DIRECTION FROM	DIRECTION TO				
1	1977	SEMARANG ONLY	50	X		NORMAL	very g	l	1.08
2					X	NORMAL	g	m	1.03
3				ok	X	SEM. W. - PEKALONGAN OUT	g	m	1.0
4	1984				X	SEM. W. - PEKALONGAN OUT	a	h	0.81
5			100	ok X		NORMAL	g	l	1.05
6				ok X		SEM. W. - PEKALONGAN OUT	g	l	1.05
7				??	X	NORMAL	a	h	0.82
8				NO	X	SEM. W. - PEKALONGAN OUT	i	very h	0.78
9		SEMARANG + 100 MW at TJILATJAP		ok X		NORMAL	g	h	1.05
10				X		SEM. W. - PEKALONGAN OUT	g	h	1.05
11					X	NORMAL	g	m	1.01
12					X	TEGAL - PURWOKERTO OUT	g	m	1.05
13		SEMARANG ONLY			X	SEM. W. - PEKALONGAN OUT ADDED SINGLE CIRCUIT BETWEEN PURWOKERTO AND GARUNG	g	m	1.05

Exhibit B

CENTRAL JAVA
TRANSMISSION REQUIREMENTS 1977 - 1989
LOAD FLOW TESTS
ALTERNATIVE B

TEST NO. B-	DESCRIPTION						RESULTS		
	LOAD LEVEL	GENERATION	POWER INTERCHANGE WITH WEST MAVA			TRANSMISSION LINES NORMAL: ALL LINES IN SERVICE OUT: ONE SINGLE LINE OUT OF SERVICE	SYSTEM PERFORMANCE g = good a = acceptable i = inadequate	LINES LOADED h = heavy m = medium l = light	MINIMUM BUS VOLTAGE - KETENGER SYSTEM
			MW	DIRECTION FROM	DIRECTION TO				
1	1977	SEMARANG ONLY	50	X		NORMAL	very g	l	1.08
2					X	NORMAL	g	m	1.0
3				NO	X	SEM. W. - PEKALONGAN OUT	i	h	0.71
4	1984			X		NORMAL	g	l	1.0
5					X	NORMAL	a	h	0.935
6				NO	X	GARUNG - MAGELANG OUT	i	very h	0.77
7				NO	X	SEM. W - PEKALONGAN OUT ADDED 2nd CIRCUIT TEGAL - PURWOKERTO-GARUNG-MAGELANG	i	h	0.82
8					X	SEM. W. - PEKALONGAN OUT ADDED 2nd CIRCUIT SEMARANG - PEKALONGAN - TEGAL	g	h	0.98
9			100	X		NORMAL	g	m	1.01
10				X		PEKALONGAN - TEGAL OUT	g	m	0.99
11				NO	X	NORMAL	i	h	0.88
12					X	SEM. - DJATINGALEH OUT ADDED 2nd CIRCUIT SEM. - TEGAL	g	h	0.95
13		SEMARANG + 100 MW at TJILATJAP		X		NORMAL	very g	h	1.05
14				X		SEM. W. - PEKALONGAN OUT	very g	h	1.044
15					X	NORMAL	g	h	0.97
16				NO	X	TEGAL - PURWOKERTO OUT	i	very h	0.71
17					X	TEGAL - PURWOKERTO OUT ADDED 2nd CIRCUIT SEM. - TEGAL	g	h	0.95

Exhibit C

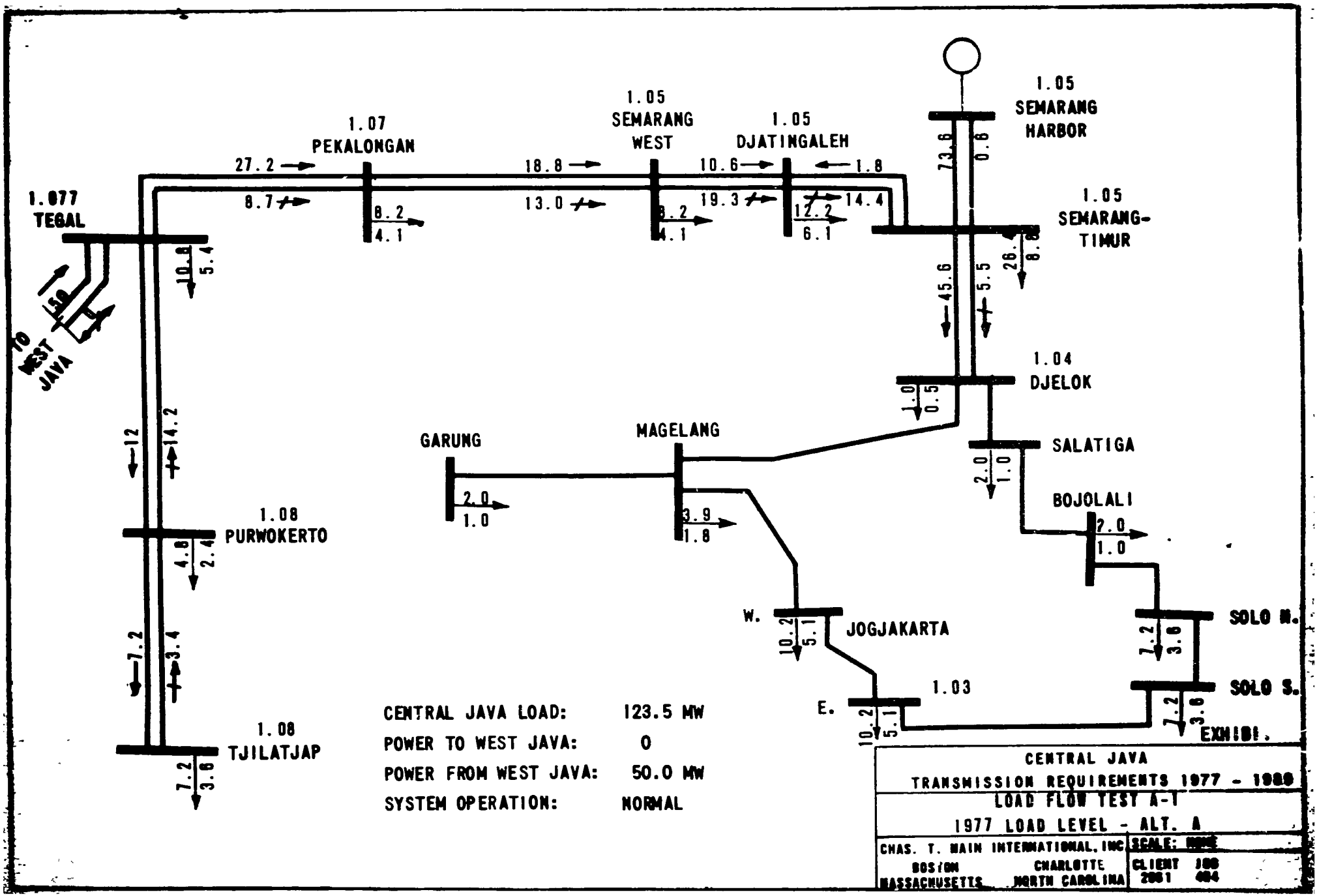
1.077
TEGAL
1.07
PEKALONGAN
1.05
SEMARANG
WEST
1.05
DJATINGALEH
1.05
SEMARANG
HARBOR
1.05
SEMARANG-
TIMUR
1.04
DJELOK
SALATIGA
BOJOLALI
SOLO N.
SOLO S.
EXHIBI.
1.03
E.
W.
JOGJAKARTA
MAGELANG
GARUNG
1.08
PURWOKERTO
1.08
TJILATJAP
TO
WEST
JAVA
50
27.2
8.7
8.2
4.1
18.8
13.0
8.2
4.1
10.6
19.3
12.2
6.1
1.8
14.4
73.6
0.8
26.
8.8
45.6
5.5
1.0
0.5
2.0
1.0
2.0
1.0
3.9
1.8
10.2
5.1
10.2
5.1
7.2
3.6
7.2
3.6
7.2
3.6
10.8
5.4
12
14.2
4.8
2.4
7.2
3.4
CENTRAL JAVA LOAD: 123.5 MW
POWER TO WEST JAVA: 0
POWER FROM WEST JAVA: 50.0 MW
SYSTEM OPERATION: NORMAL
CENTRAL JAVA
TRANSMISSION REQUIREMENTS 1977 - 1989
LOAD FLOW TEST A-1
1977 LOAD LEVEL - ALT. A
CHAS. T. MAIN INTERNATIONAL, INC
BOSTON
MASSACHUSETTS
CHARLOTTE
NORTH CAROLINA
SCALE:
CLIENT
2051

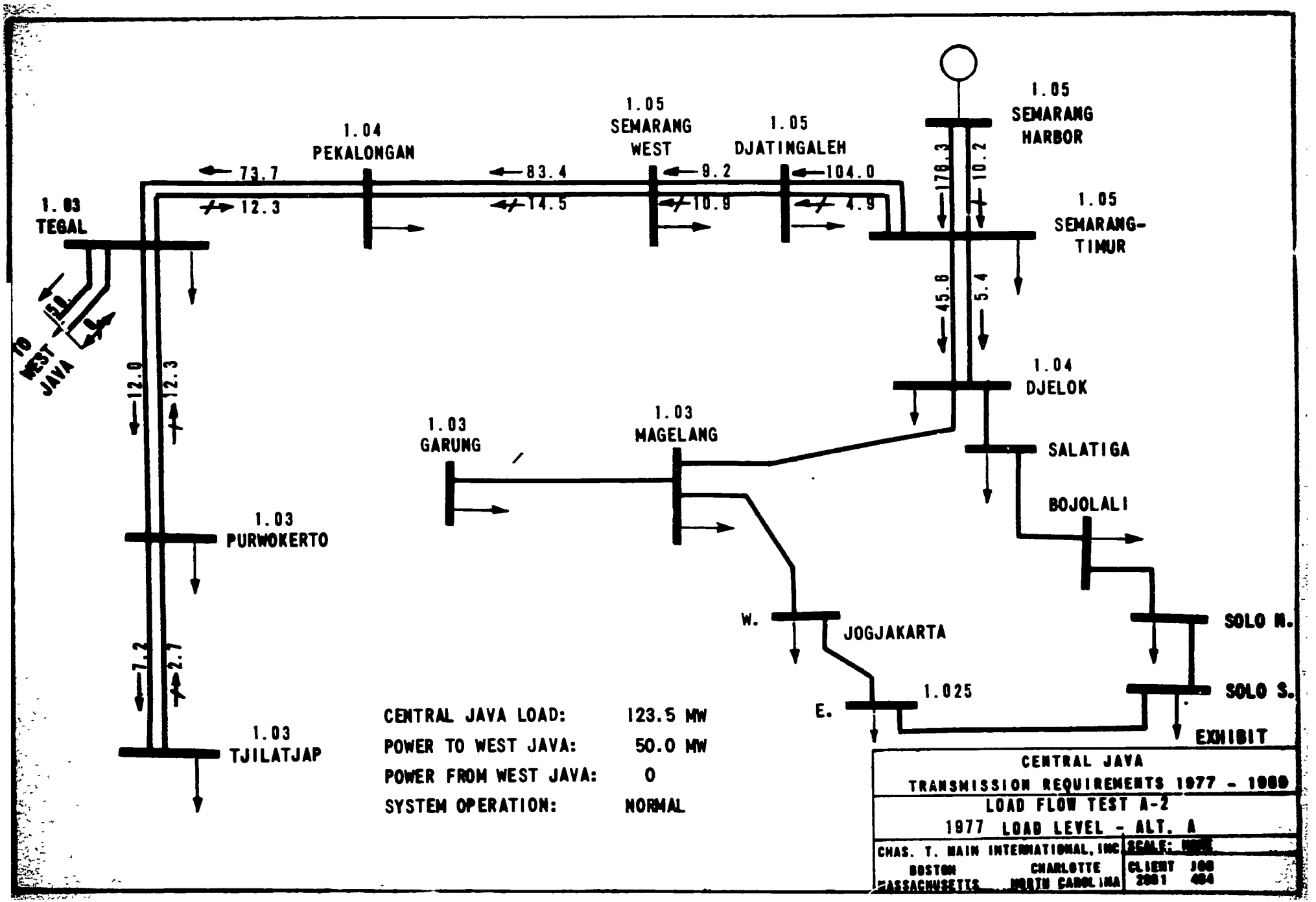
1.03
TEGAL
1.04
PEKALONGAN
1.05
SEMARANG
WEST
1.05
DJATINGALEH
1.05
SEMARANG
HARBOR
1.05
SEMARANG-
TIMUR
1.04
DJELOK
SALATIGA
BOJOLALI
SOLO N.
SOLO S.
EXHIBIT
1.03
GARUNG
1.03
MAGELANG
W.
JOGJAKARTA
E.
1.025
1.03
PURWOKERTO
1.03
TJILATJAP
TO
WEST
JAVA
73.7
12.3
83.4
14.5
9.2
10.9
104.0
4.9
178.3
10.2
45.8
5.4
12.0
12.3
7.2
2.7
CENTRAL JAVA LOAD: 123.5 MW
POWER TO WEST JAVA: 50.0 MW
POWER FROM WEST JAVA: 0
SYSTEM OPERATION: NORMAL
CENTRAL JAVA
TRANSMISSION REQUIREMENTS 1977 - 1989
LOAD FLOW TEST A-2
1977 LOAD LEVEL - ALT. A
CHAS. T. MAIN INTERNATIONAL, INC.
BOSTON MASSACHUSETTS
CHARLOTTE NORTH CAROLINA
SCALE:
CLIENT JOB
2001 404

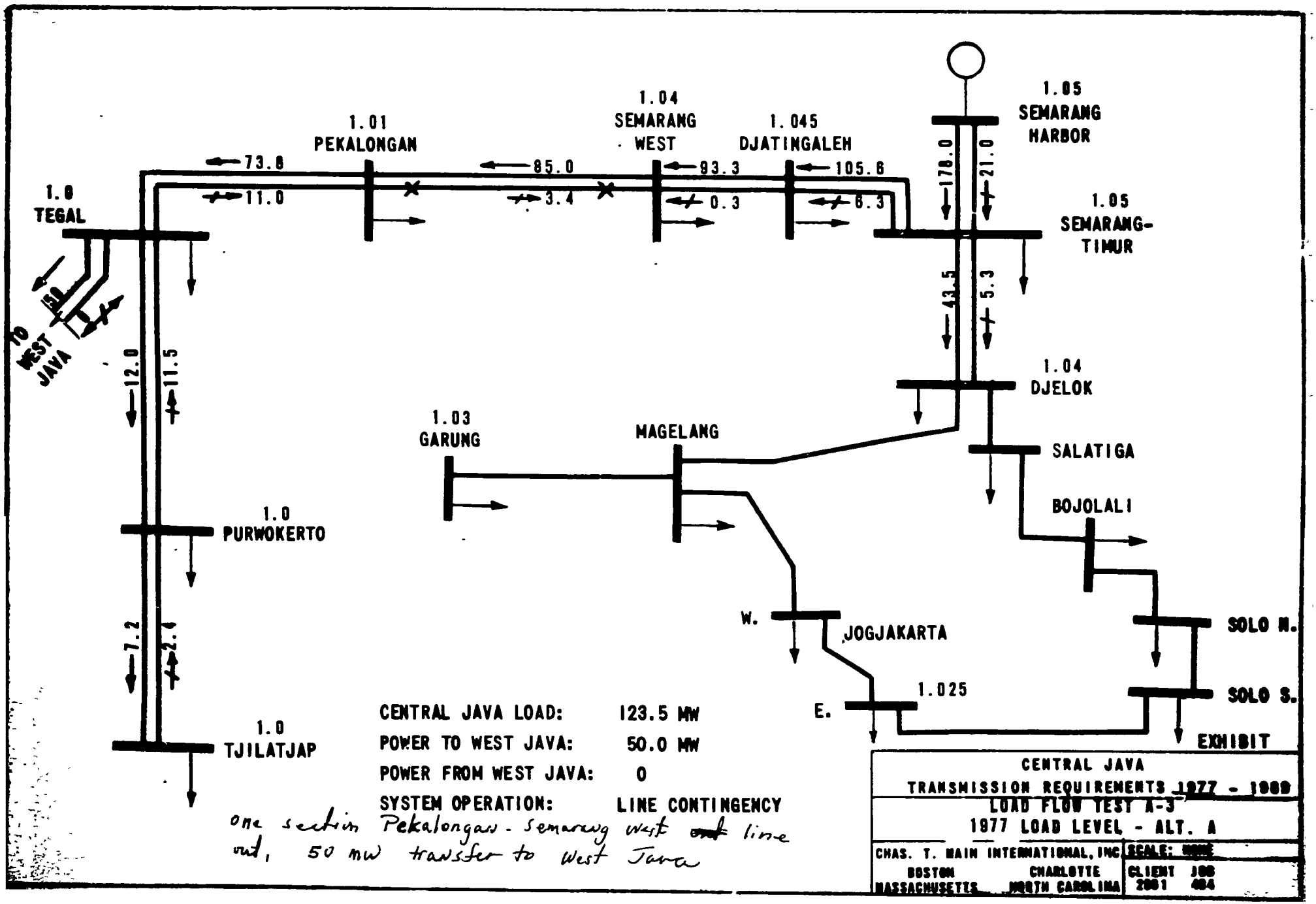
1.0
TEGAL
1.01
PEKALONGAN
1.04
SEMARANG
WEST
1.045
DJATINGALEH
1.05
SEMARANG
HARBOR
1.05
SEMARANG-
TIMUR
1.04
DJELOK
SALATIGA
BOJOLALI
SOLO N.
SOLO S.
EXHIBIT
1.025
E.
JOGJAKARTA
W.
MAGELANG
1.03
GARUNG
1.0
PURWOKERTO
1.0
TJILATJAP
TO
WEST
JAVA
73.8
11.0
85.0
3.4
93.3
0.3
105.6
6.3
178.0
21.0
43.5
5.3
12.0
11.5
7.2
2.4
CENTRAL JAVA LOAD: 123.5 MW
POWER TO WEST JAVA: 50.0 MW
POWER FROM WEST JAVA: 0
SYSTEM OPERATION: LINE CONTINGENCY
one section Pekalongan - Semarang west ~~out~~ line out, 50 mw transfer to West Java
CENTRAL JAVA
TRANSMISSION REQUIREMENTS 1977 - 1989
LOAD FLOW TEST A-3
1977 LOAD LEVEL - ALT. A
CHAS. T. MAIN INTERNATIONAL, INC.
BOSTON MASSACHUSETTS
CHARLOTTE NORTH CAROLINA
SCALE: NONE
CLIENT JOB
2001 404

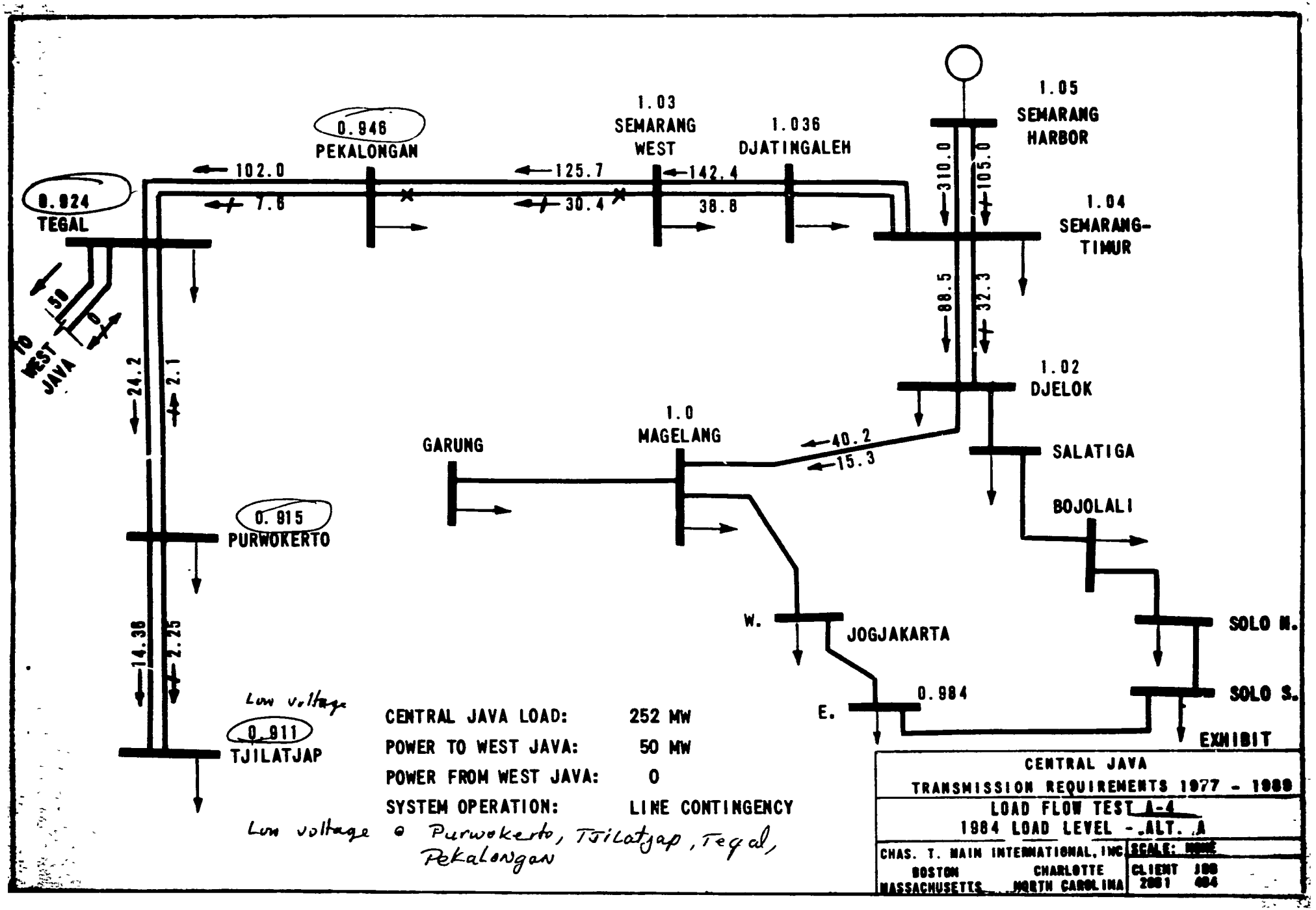
0.824
TEGAL
0.946
PEKALONGAN
1.03
SEMARANG
WEST
1.036
DJATINGALEH
1.05
SEMARANG
HARBOR
1.04
SEMARANG-
TIMUR
1.02
DJELOK
SALATIGA
BOJOLALI
SOLO N.
SOLO S.
EXHIBIT
0.984
E.
W.
JOGJAKARTA
1.0
MAGELANG
GARUNG
0.915
PURWOKERTO
0.911
TJILATJAP
Low voltage
TO WEST JAVA
50
0
102.0
7.6
125.7
30.4
142.4
38.8
310.0
105.0
88.5
32.3
40.2
15.3
24.2
2.1
14.38
2.25
CENTRAL JAVA LOAD: 252 MW
POWER TO WEST JAVA: 50 MW
POWER FROM WEST JAVA: 0
SYSTEM OPERATION: LINE CONTINGENCY
Low voltage @ Purwokerto, Tjilatjap, Tegal, Pekalongan
CENTRAL JAVA
TRANSMISSION REQUIREMENTS 1977 - 1989
LOAD FLOW TEST A-4
1984 LOAD LEVEL - ALT. A
CHAS. T. MAIN INTERNATIONAL, INC.
BOSTON MASSACHUSETTS
CHARLOTTE NORTH CAROLINA
SCALE: NONE
CLIENT 100
2081 484

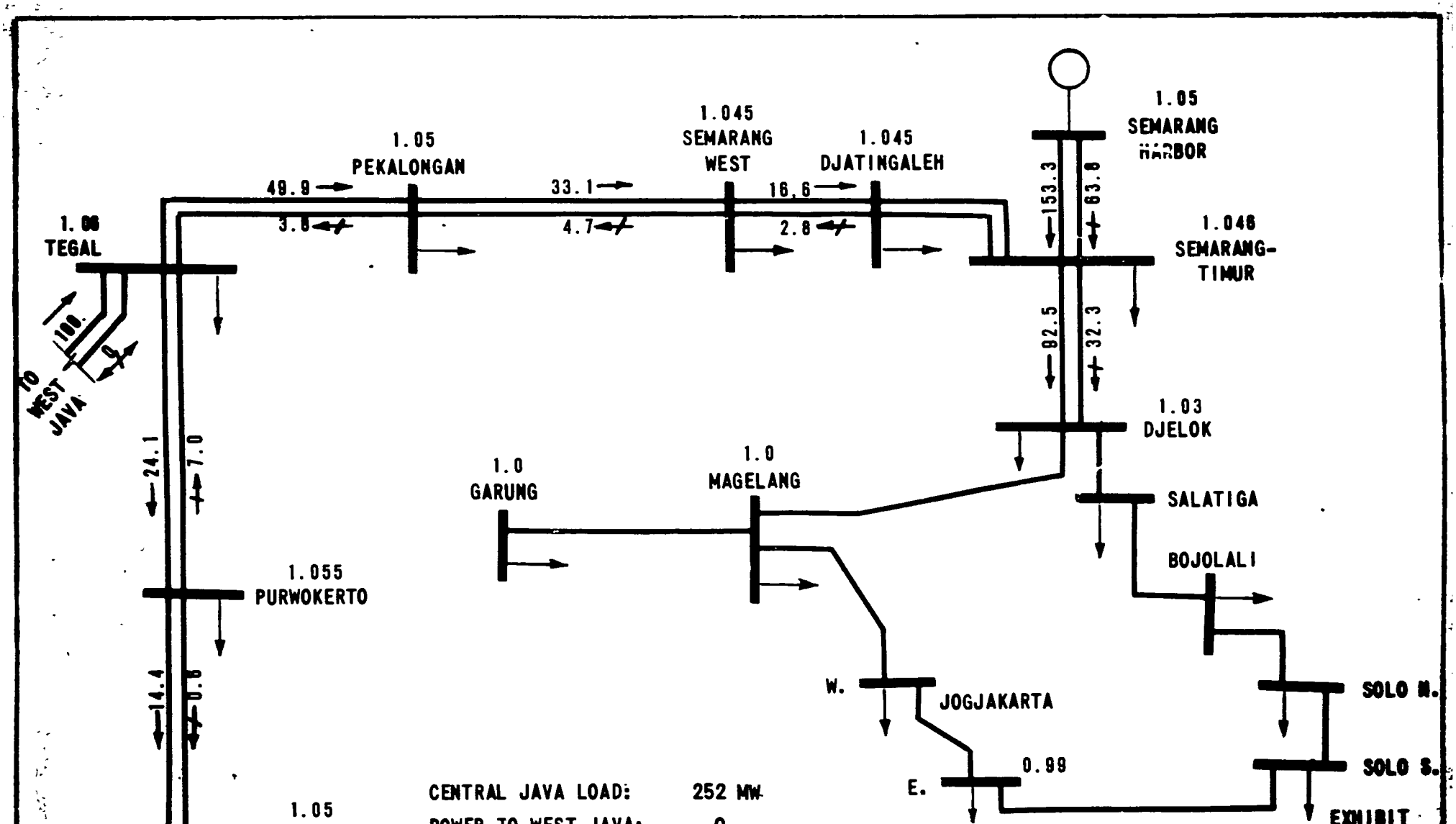

CENTRAL JAVA LOAD: 252 MW
POWER TO WEST JAVA: 0
POWER FROM WEST JAVA: 100 MW
SYSTEM OPERATION: NORMAL

OK

CENTRAL JAVA
TRANSMISSION REQUIREMENTS 1977 - 1989
LOAD FLOW TEST A-5
1984 LOAD LEVEL - ALT. A

CHAS. T. MAIN INTERNATIONAL, INC.
BOSTON MASSACHUSETTS
CHARLOTTE NORTH CAROLINA

SCALE: NONE
CLIENT JOB
2061 404

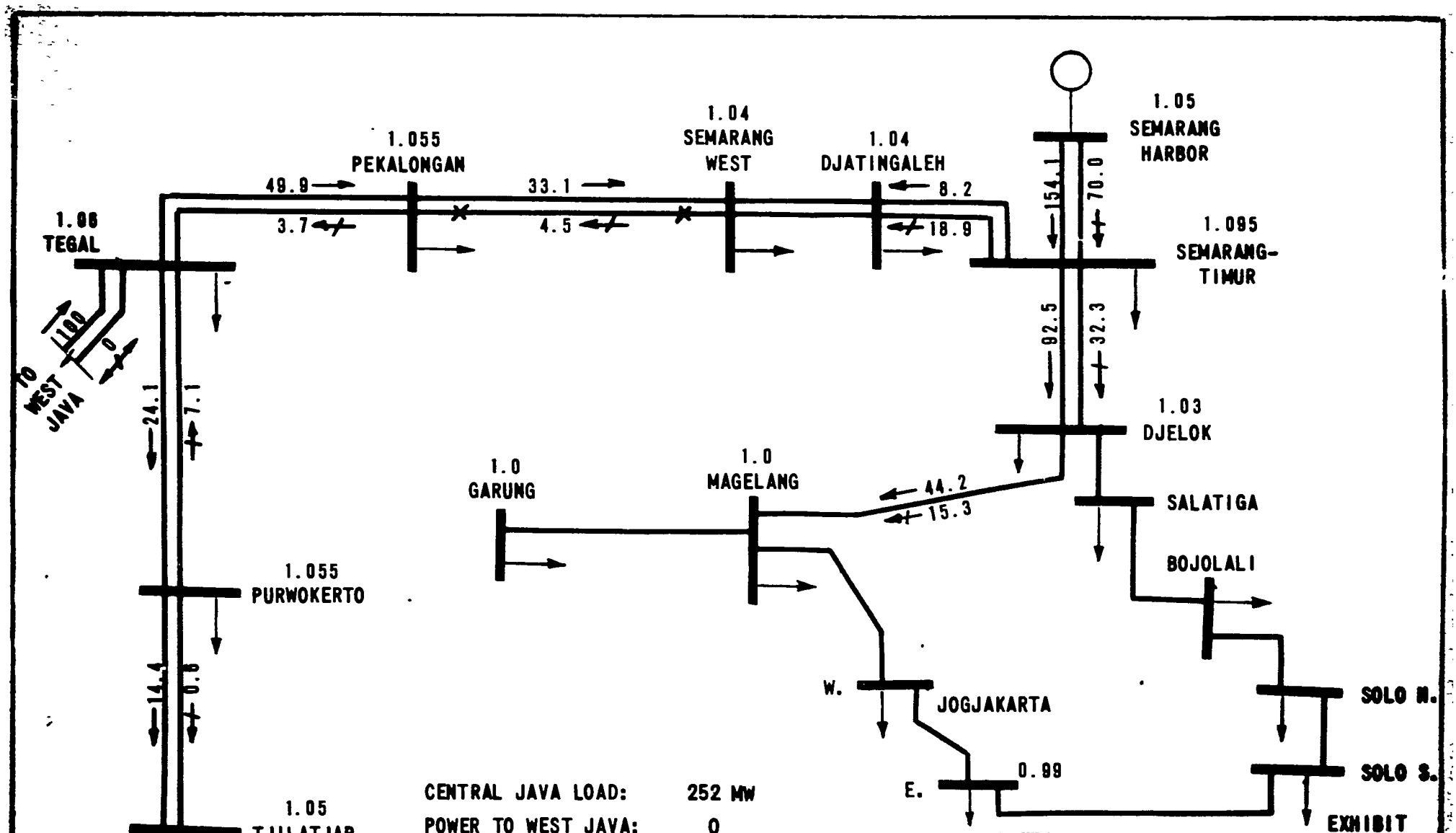
1.05
SEMARANG
HARBOR
1.04
SEMARANG
WEST
1.04
DJATINGALEH
1.055
PEKALONGAN
1.06
TEGAL
49.9
33.1
8.2
3.7
4.5
18.9
154.1
70.0
1.095
SEMARANG-
TIMUR
92.5
32.3
TO
WEST
JAVA
100
0
24.1
7.1
1.03
DJELOK
1.0
GARUNG
1.0
MAGELANG
44.2
15.3
SALATIGA
BOJOLALI
1.055
PURWOKERTO
14.4
0.6
W.
JOGJAKARTA
SOLO N.
0.99
E.
SOLO S.
1.05
TJILATJAP
EXHIBIT
CENTRAL JAVA LOAD: 252 MW
POWER TO WEST JAVA: 0
POWER FROM WEST JAVA: 100 MW
SYSTEM OPERATION: LINE CONTINGENCY
CENTRAL JAVA
TRANSMISSION REQUIREMENTS 1977 - 1989
LOAD FLOW TEST A-6
1984 LOAD LEVEL - ALT. B
CHAS. T. MAIN INTERNATIONAL, INC.
BOSTON MASSACHUSETTS
CHARLOTTE NORTH CAROLINA
SCALE: NONE
CLIENT JOB
2661 404

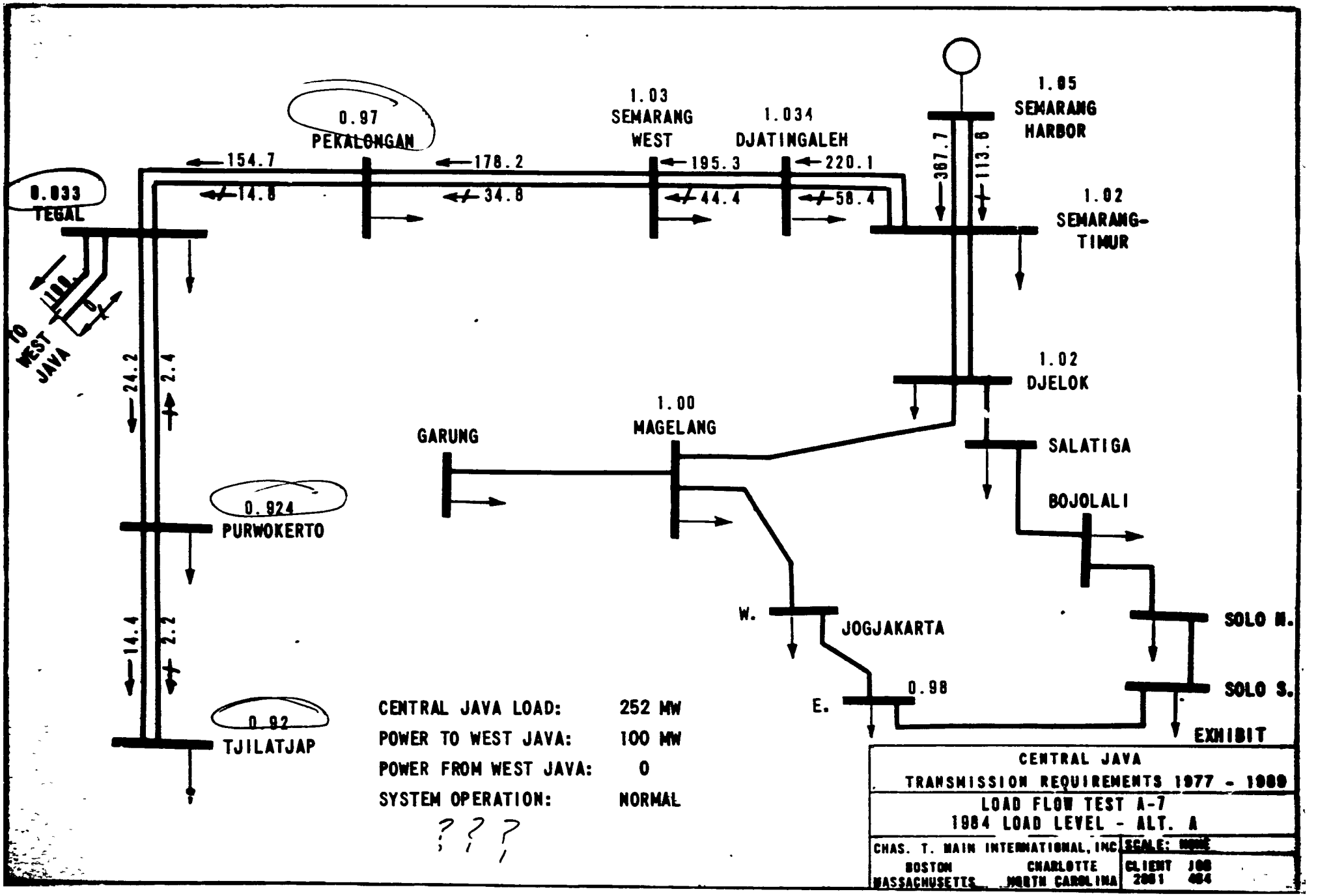
0.97
PEKALONGAN
1.03
SEMARANG
WEST
1.034
DJATINGALEH
1.05
SEMARANG
HARBOR
0.933
TEGAL
154.7
178.2
195.3
220.1
14.8
34.8
44.4
58.4
387.7
113.8
1.02
SEMARANG-
TIMUR
TO
WEST
JAVA
100
0
24.2
2.4
1.02
DJELOK
1.00
MAGELANG
GARUNG
SALATIGA
0.924
PURWOKERTO
BOJOLALI
W.
JOGJAKARTA
SOLO N.
14.4
2.2
0.98
E.
SOLO S.
0.92
TJILATJAP
EXHIBIT
CENTRAL JAVA LOAD: 252 MW
POWER TO WEST JAVA: 100 MW
POWER FROM WEST JAVA: 0
SYSTEM OPERATION: NORMAL
???
CENTRAL JAVA
TRANSMISSION REQUIREMENTS 1977 - 1989
LOAD FLOW TEST A-7
1984 LOAD LEVEL - ALT. A
CHAS. T. MAIN INTERNATIONAL, INC.
BOSTON MASSACHUSETTS
CHARLOTTE NORTH CAROLINA
SCALE: NONE
CLIENT 2861
JOB 464

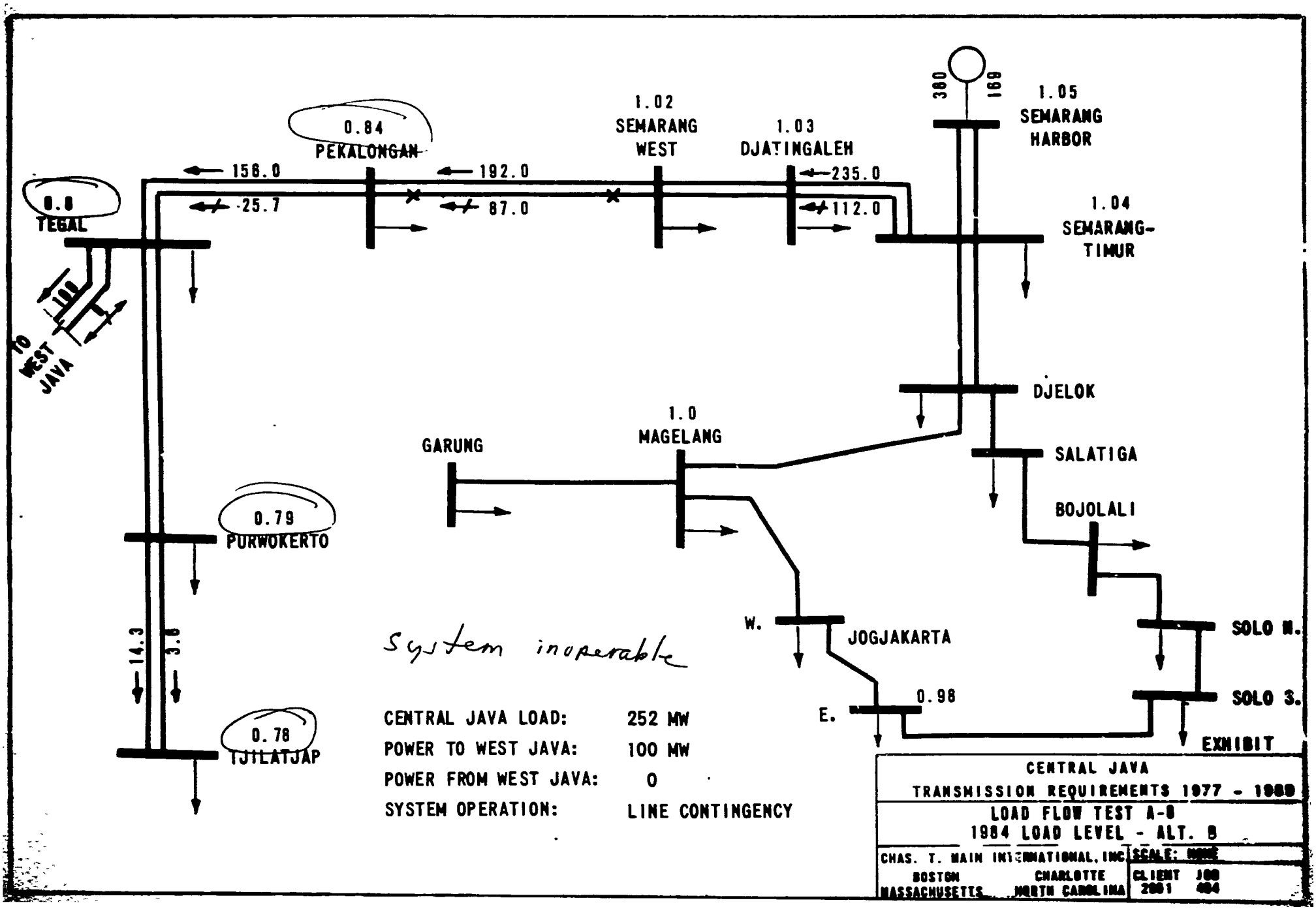

0.8
TEGAL
TO WEST JAVA
156.0
25.7
0.84
PEKALONGAN
192.0
87.0
1.02
SEMARANG WEST
1.03
DJATINGALEH
235.0
112.0
380
169
1.05
SEMARANG HARBOR
1.04
SEMARANG-TIMUR
DJELOK
SALATIGA
BOJOLALI
SOLO N.
SOLO S.
EXHIBIT
GARUNG
1.0
MAGELANG
W.
JOGJAKARTA
E.
0.98
0.79
PURWOKERTO
14.3
3.6
0.78
TJILATJAP
System inoperable
CENTRAL JAVA LOAD: 252 MW
POWER TO WEST JAVA: 100 MW
POWER FROM WEST JAVA: 0
SYSTEM OPERATION: LINE CONTINGENCY
CENTRAL JAVA
TRANSMISSION REQUIREMENTS 1977 - 1989
LOAD FLOW TEST A-8
1984 LOAD LEVEL - ALT. B
CHAS. T. MAIN INTERNATIONAL, INC.
BOSTON MASSACHUSETTS
CHARLOTTE NORTH CAROLINA
SCALE: NONE
CLIENT JOB
2001 404

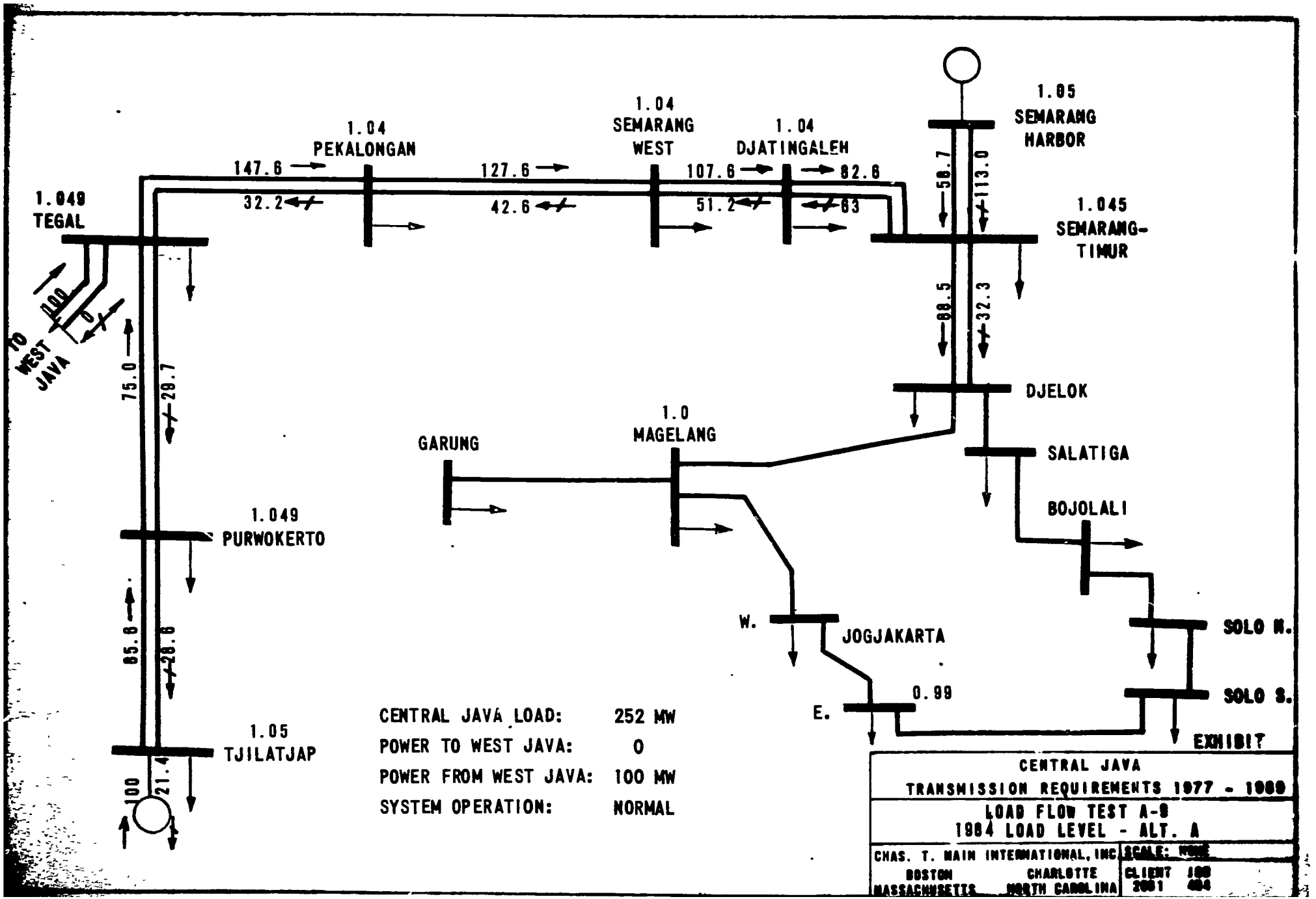
1.05
SEMARANG
HARBOR
1.04
SEMARANG
WEST
1.04
DJATINGALEH
1.04
PEKALONGAN
147.6
127.6
107.6
82.6
32.2
42.6
51.2
63
58.7
113.0
1.049
TEGAL
1.045
SEMARANG-
TIMUR
100
0
TO
WEST
JAVA
88.5
32.3
75.0
29.7
DJELOK
1.0
MAGELANG
GARUNG
SALATIGA
BOJOLALI
1.049
PURWOKERTO
85.8
28.8
W.
JOGJAKARTA
SOLO N.
0.99
E.
SOLO S.
1.05
TJILATJAP
100
21.4
EXHIBIT
CENTRAL JAVA LOAD: 252 MW
POWER TO WEST JAVA: 0
POWER FROM WEST JAVA: 100 MW
SYSTEM OPERATION: NORMAL
CENTRAL JAVA
TRANSMISSION REQUIREMENTS 1977 - 1989
LOAD FLOW TEST A-8
1984 LOAD LEVEL - ALT. A
CHAS. T. MAIN INTERNATIONAL, INC.
BOSTON MASSACHUSETTS
CHARLOTTE NORTH CAROLINA
SCALE: NONE
CLIENT 100
2061 404

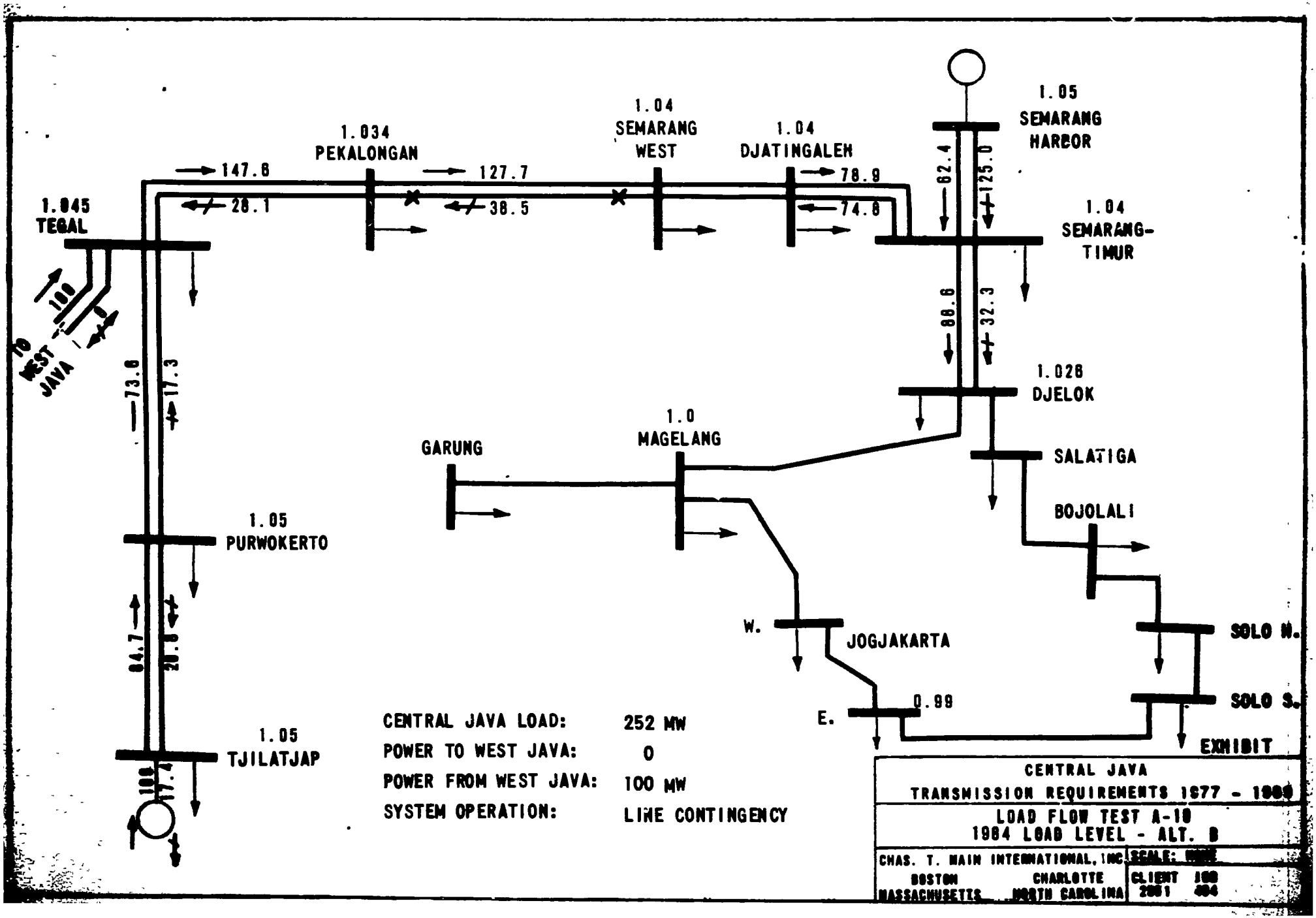
1.045
TEGAL
1.034
PEKALONGAN
1.04
SEMARANG
WEST
1.04
DJATINGALEH
1.05
SEMARANG
HARBOR
1.04
SEMARANG-
TIMUR
147.6
28.1
127.7
38.5
78.9
74.8
62.4
125.0
88.6
32.3
TO
WEST
JAVA
73.6
17.3
1.026
DJELOK
1.0
MAGELANG
GARUNG
SALATIGA
BOJOLALI
1.05
PURWOKERTO
W.
JOGJAKARTA
SOLO N.
SOLO S.
E.
0.99
EXHIBIT
1.05
TJILATJAP
CENTRAL JAVA LOAD: 252 MW
POWER TO WEST JAVA: 0
POWER FROM WEST JAVA: 100 MW
SYSTEM OPERATION: LINE CONTINGENCY
CENTRAL JAVA
TRANSMISSION REQUIREMENTS 1977 - 1989
LOAD FLOW TEST A-10
1984 LOAD LEVEL - ALT. B
CHAS. T. MAIN INTERNATIONAL, INC.
BOSTON
MASSACHUSETTS
CHARLOTTE
NORTH CAROLINA
SCALE:
CLIENT
2061
404

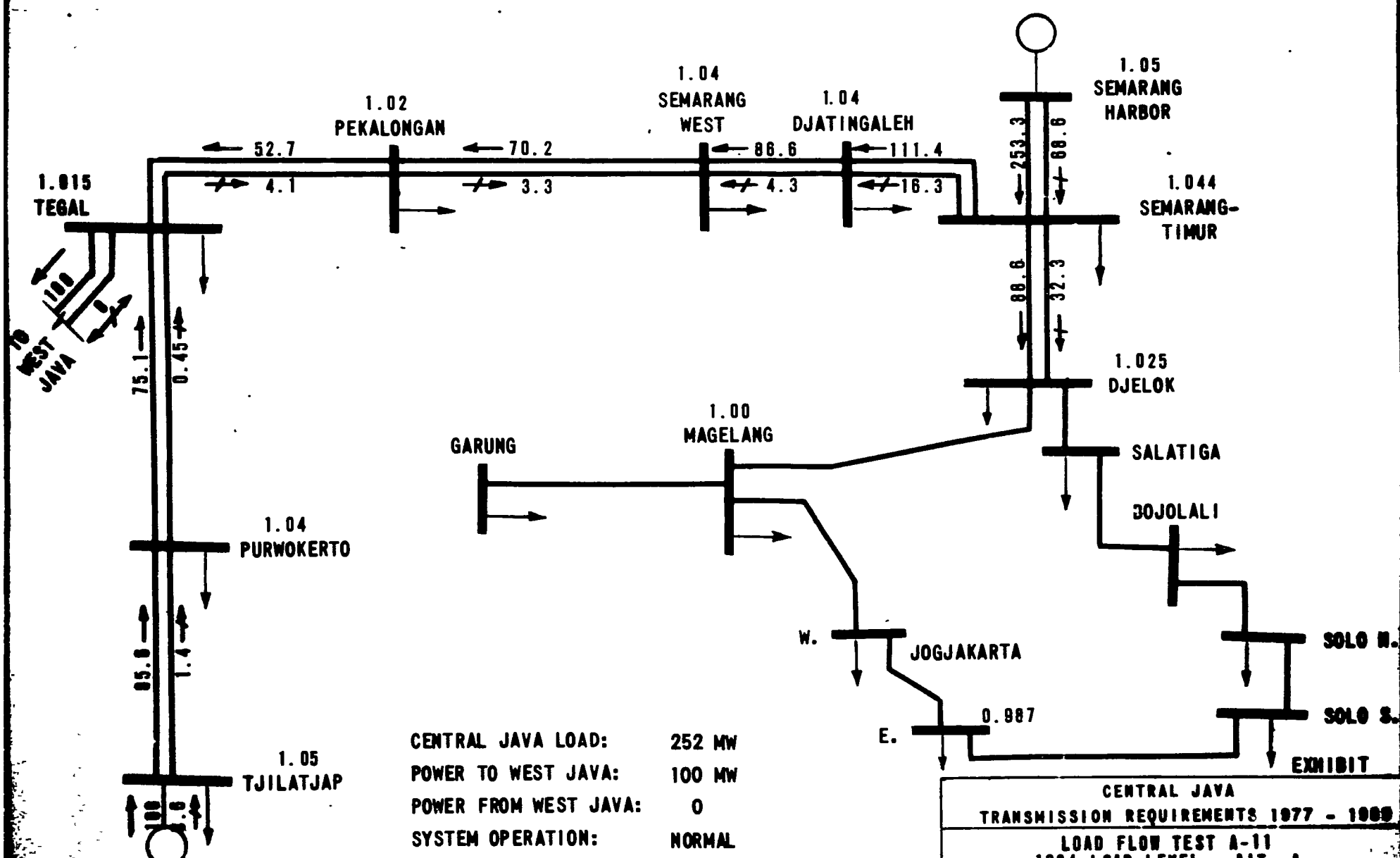
1.015
TEGAL
1.02
PEKALONGAN
1.04
SEMARANG
WEST
1.04
DJATINGALEH
1.05
SEMARANG
HARBOR
1.044
SEMARANG-
TIMUR
1.025
DJELOK
SALATIGA
BOJOLALI
SOLO N.
SOLO S.
EXHIBIT
1.00
MAGELANG
GARUNG
1.04
PURWOKERTO
1.05
TJILATJAP
W.
JOGJAKARTA
E.
0.987
52.7
4.1
70.2
3.3
86.6
4.3
111.4
16.3
253.3
88.6
88.6
32.3
75.1
0.45
85.8
1.4
TO WEST JAVA
CENTRAL JAVA LOAD: 252 MW
POWER TO WEST JAVA: 100 MW
POWER FROM WEST JAVA: 0
SYSTEM OPERATION: NORMAL
CENTRAL JAVA
TRANSMISSION REQUIREMENTS 1977 - 1989
LOAD FLOW TEST A-11
1984 LOAD LEVEL - ALT. A
CHAS. T. MAIN INTERNATIONAL, INC.
BOSTON MASSACHUSETTS
CHARLOTTE NORTH CAROLINA
SCALE: NONE
CLIENT JOB
2001 404

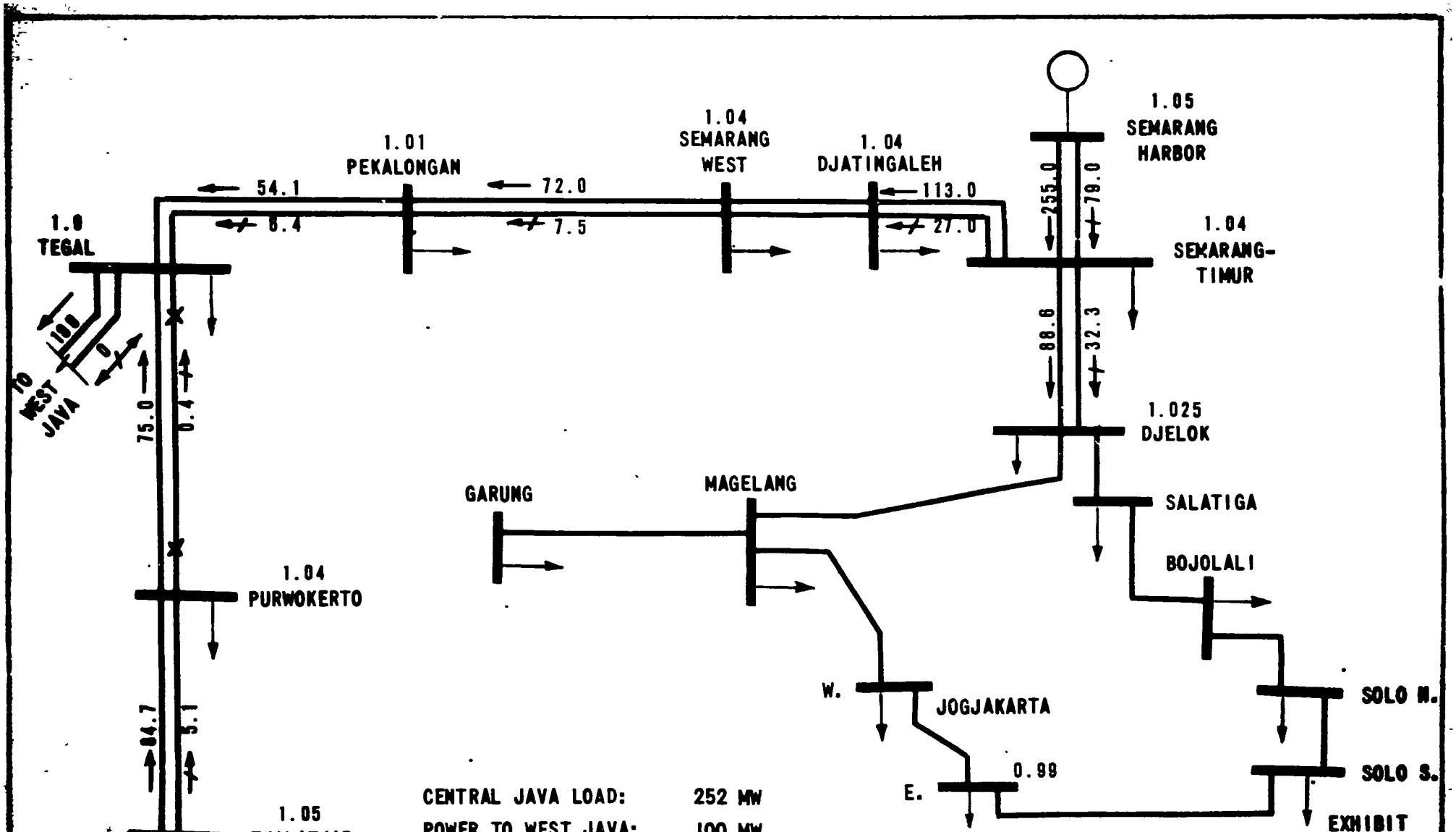
1.0
TEGAL
1.01
PEKALONGAN
1.04
SEMARANG
WEST
1.04
DJATINGALEH
1.05
SEMARANG
HARBOR
1.04
SEMARANG-
TIMUR
1.025
DJELOK
SALATIGA
BOJOLALI
SOLO N.
SOLO S.
EXHIBIT
GARUNG
MAGELANG
W.
JOGJAKARTA
E.
0.99
1.04
PURWOKERTO
1.05
TJILATJAP
TO
WEST
JAVA
54.1
72.0
113.0
8.4
7.5
27.0
255.0
79.0
88.6
32.3
100
0
75.0
0.4
84.7
5.1
100
8.5
CENTRAL JAVA LOAD: 252 MW
POWER TO WEST JAVA: 100 MW
POWER FROM WEST JAVA: 0
SYSTEM OPERATION: LINE CONTINGENCY
CENTRAL JAVA
TRANSMISSION REQUIREMENTS 1977 - 1989
LOAD FLOW TEST A-12
1984 LOAD LEVEL - ALT. B
CHAS. T. MAIN INTERNATIONAL, INC
BOSTON MASSACHUSETTS
CHARLOTTE NORTH CAROLINA
SCALE: NONE
CLIENT JOB
2081 484

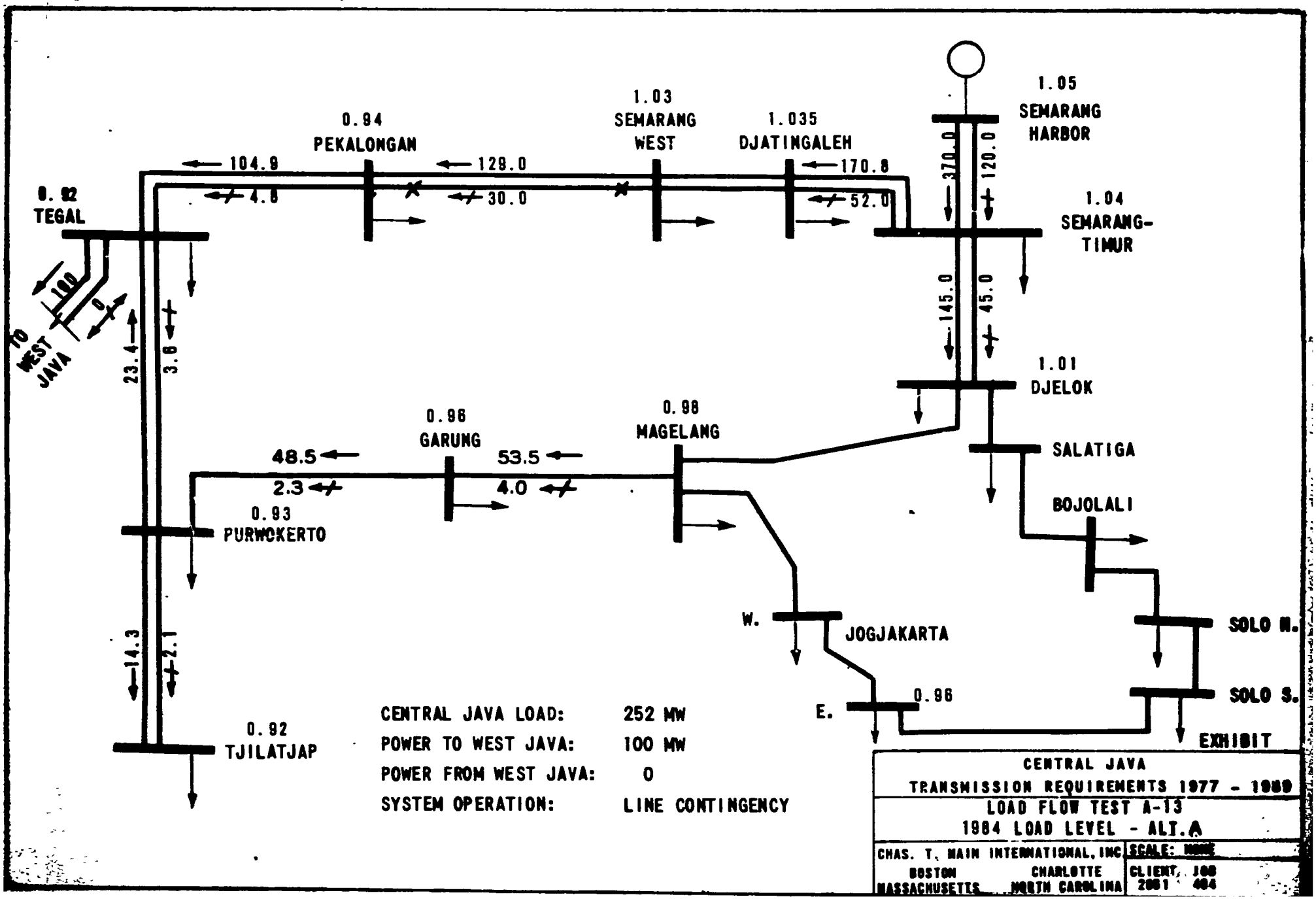
0.92
TEGAL
0.94
PEKALONGAN
1.03
SEMARANG
WEST
1.035
DJATINGALEH
1.05
SEMARANG
HARBOR
1.04
SEMARANG-
TIMUR
1.01
DJELOK
SALATIGA
BOJOLALI
SOLO N.
SOLO S.
EXHIBIT
0.96
GARUNG
0.98
MAGELANG
0.93
PURWOKERTO
0.92
TJILATJAP
W.
JOGJAKARTA
E.
0.96
TO
WEST
JAVA
100
0
104.9
4.8
129.0
30.0
170.8
52.0
370.0
120.0
145.0
45.0
23.4
3.8
48.5
2.3
53.5
4.0
14.3
2.1
CENTRAL JAVA LOAD: 252 MW
POWER TO WEST JAVA: 100 MW
POWER FROM WEST JAVA: 0
SYSTEM OPERATION: LINE CONTINGENCY
CENTRAL JAVA
TRANSMISSION REQUIREMENTS 1977 - 1989
LOAD FLOW TEST A-13
1984 LOAD LEVEL - ALT.A
CHAS. T. MAIN INTERNATIONAL, INC
BOSTON MASSACHUSETTS
CHARLOTTE NORTH CAROLINA
SCALE: NONE
CLIENT, JOB
2081 404

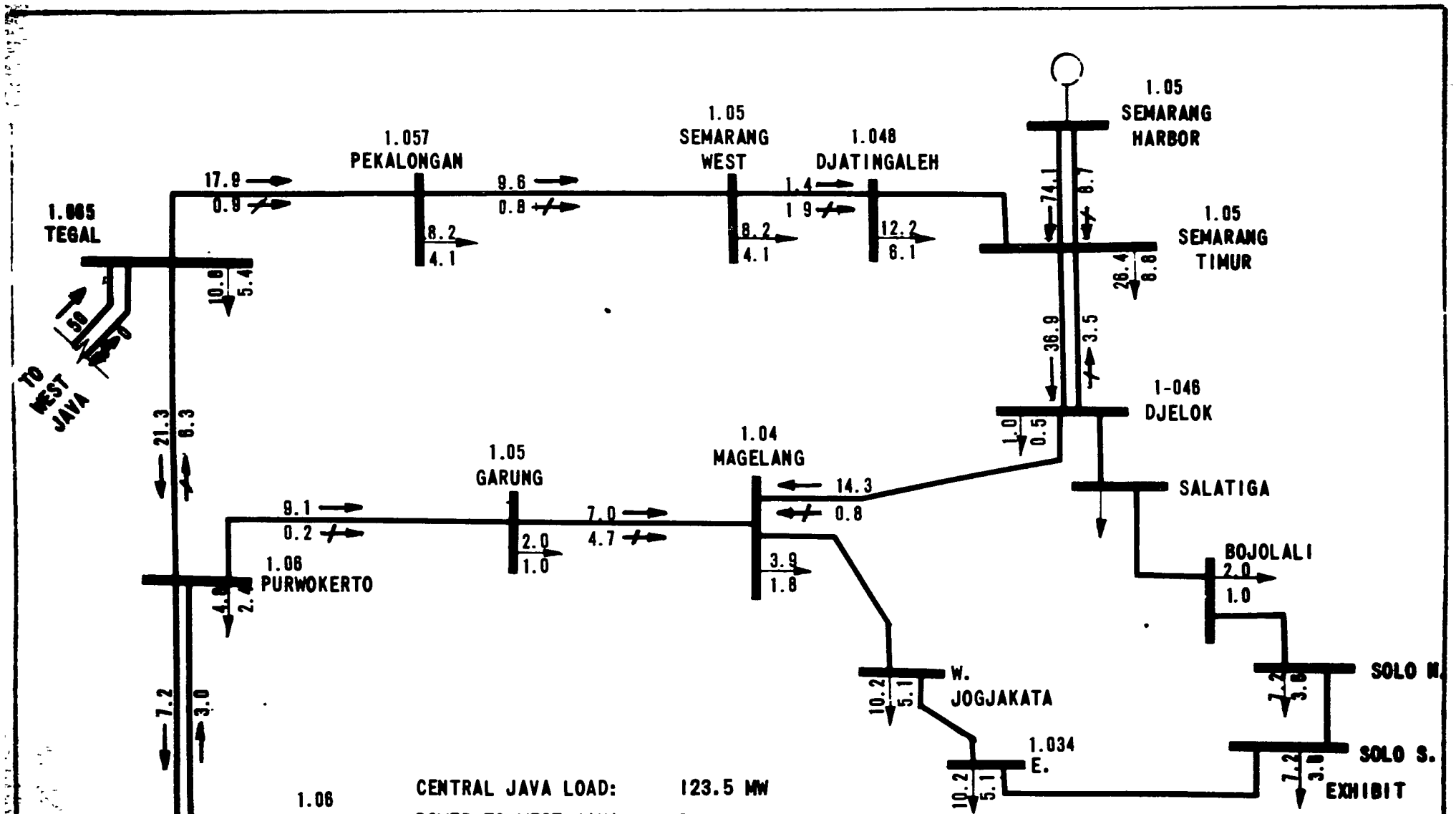

CENTRAL JAVA LOAD: 123.5 MW

POWER TO WEST JAVA: 0

POWER FROM WEST JAVA: 50.0 MW

SYSTEM OPERATION: NORMAL

No problems all with lines in

CENTRAL JAVA
TRANSMISSION REQUIREMENTS 1977 - 1989

LOAD FLOW TEST B-1
1977 LOAD LEVEL - ALT. B-1

CHAS. T. MAIN INTERNATIONAL, INC.
BOSTON MASSACHUSETTS
CHARLOTTE NORTH CAROLINA

SCALE: NONE
CLIENT JOB
2001 404

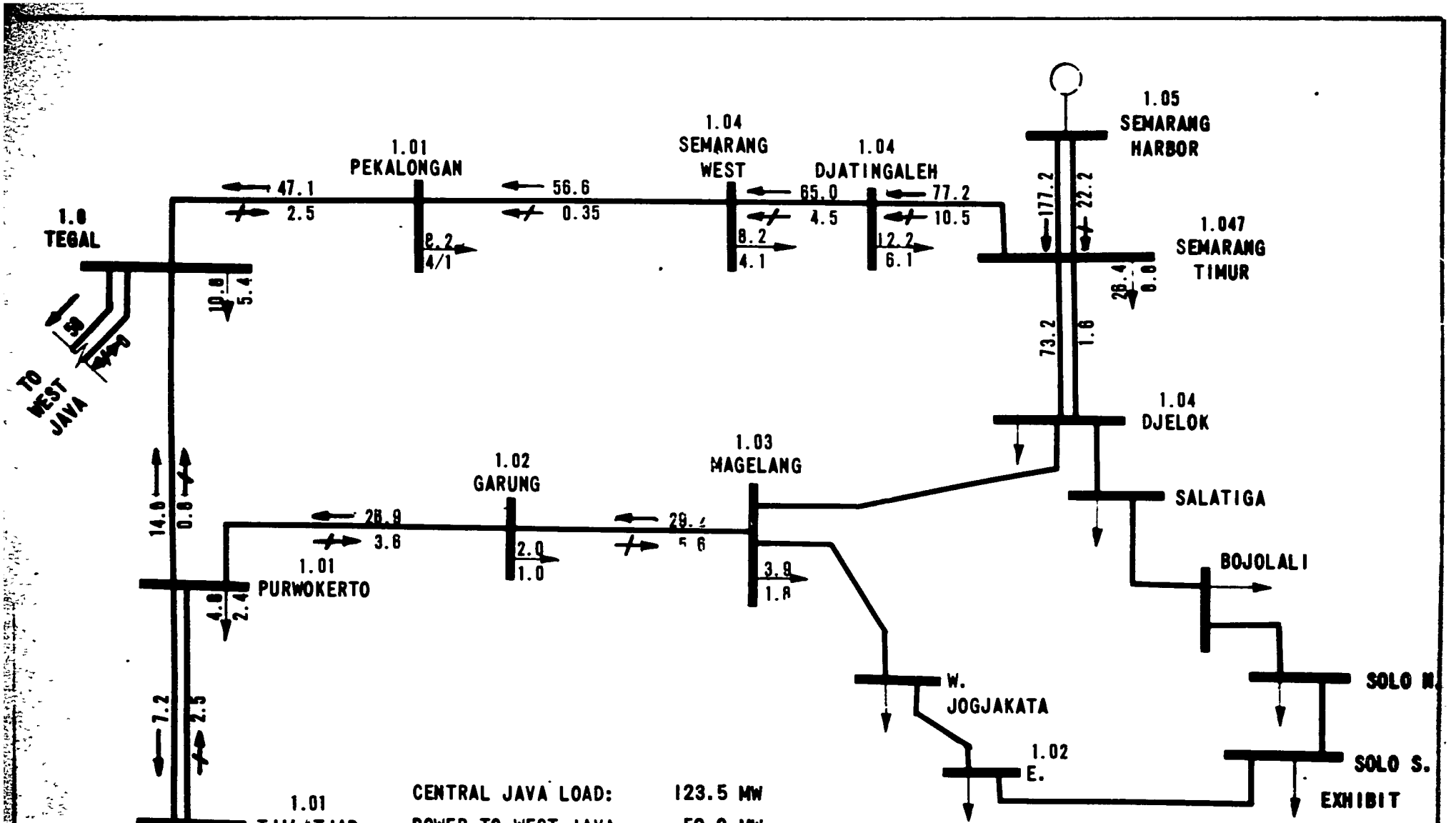
1.0
TEGAL
TO WEST JAVA
50
50
1.01
PEKALONGAN
47.1
2.5
56.6
0.35
8.2
4/1
10.8
5.4
1.04
SEMARANG WEST
65.0
4.5
8.2
4.1
1.04
DJATINGALEH
77.2
10.5
12.2
6.1
1.05
SEMARANG HARBOR
177.2
22.2
1.047
SEMARANG TIMUR
28.4
0.0
73.2
1.6
1.04
DJELOK
SALATIGA
BOJOLALI
SOLO N.
SOLO S.
EXHIBIT
1.03
MAGELANG
29.2
5.6
3.9
1.8
1.02
GARUNG
2.0
1.0
28.9
3.6
1.01
PURWOKERTO
14.0
0.8
4.8
2.4
7.2
2.5
1.01
TJILATJAP
7.2
3.6
W.
JOGJAKATA
1.02
E.
CENTRAL JAVA LOAD: 123.5 MW
POWER TO WEST JAVA: 50.0 MW
POWER FROM WEST JAVA: 0
SYSTEM OPERATION: NORMAL
No problems with all lines in
CENTRAL JAVA
TRANSMISSION REQUIREMENTS 1977 - 1989
LOAD FLOW TEST B-2
1977 LOAD LEVEL - ALT. B
CHAS. T. MAIN INTERNATIONAL, INC.
BOSTON MASSACHUSETTS
CHARLOTTE NORTH CAROLINA
SCALE:
CLIENT 2861
JOB 494

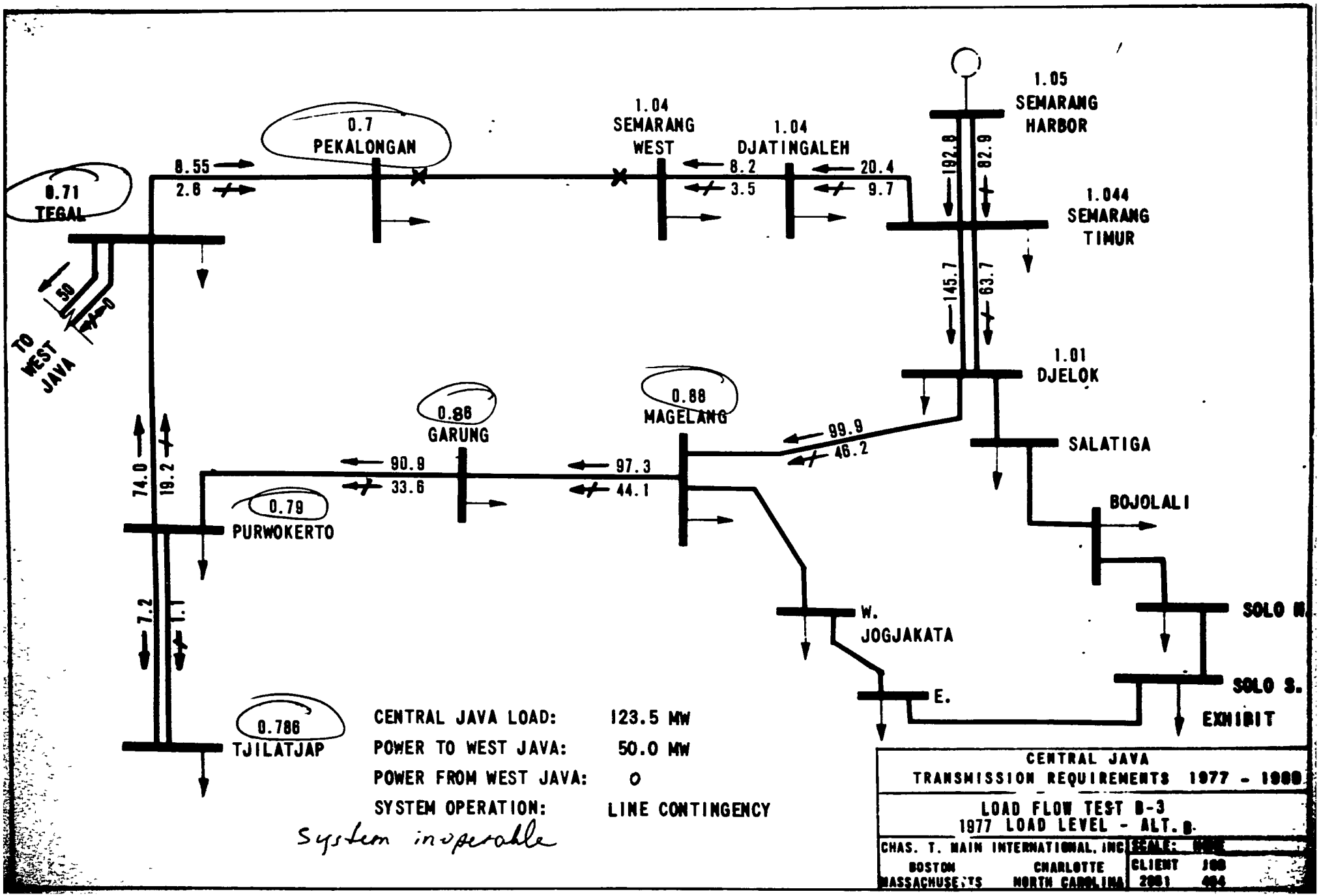
0.71
TEGAL
0.7
PEKALONGAN
1.04
SEMARANG
WEST
1.04
DJATINGALEH
1.05
SEMARANG
HARBOR
1.044
SEMARANG
TIMUR
1.01
DJELOK
SALATIGA
BOJOLALI
SOLO N.
SOLO S.
EXHIBIT
E.
W.
JOGJAKATA
0.88
MAGELANG
0.86
GARUNG
0.79
PURWOKERTO
0.786
TJILATJAP
TO
WEST
JAVA
8.55
2.6
8.2
3.5
20.4
9.7
192.8
82.9
145.7
63.7
99.9
46.2
90.9
33.6
97.3
44.1
74.0
19.2
7.2
1.1
50
0
CENTRAL JAVA LOAD: 123.5 MW
POWER TO WEST JAVA: 50.0 MW
POWER FROM WEST JAVA: 0
SYSTEM OPERATION: LINE CONTINGENCY
System inoperable
CENTRAL JAVA
TRANSMISSION REQUIREMENTS 1977 - 1988
LOAD FLOW TEST B-3
1977 LOAD LEVEL - ALT. B
CHAS. T. MAIN INTERNATIONAL, INC.
BOSTON
MASSACHUSETTS
CHARLOTTE
NORTH CAROLINA
SCALE:
CLIENT
2081

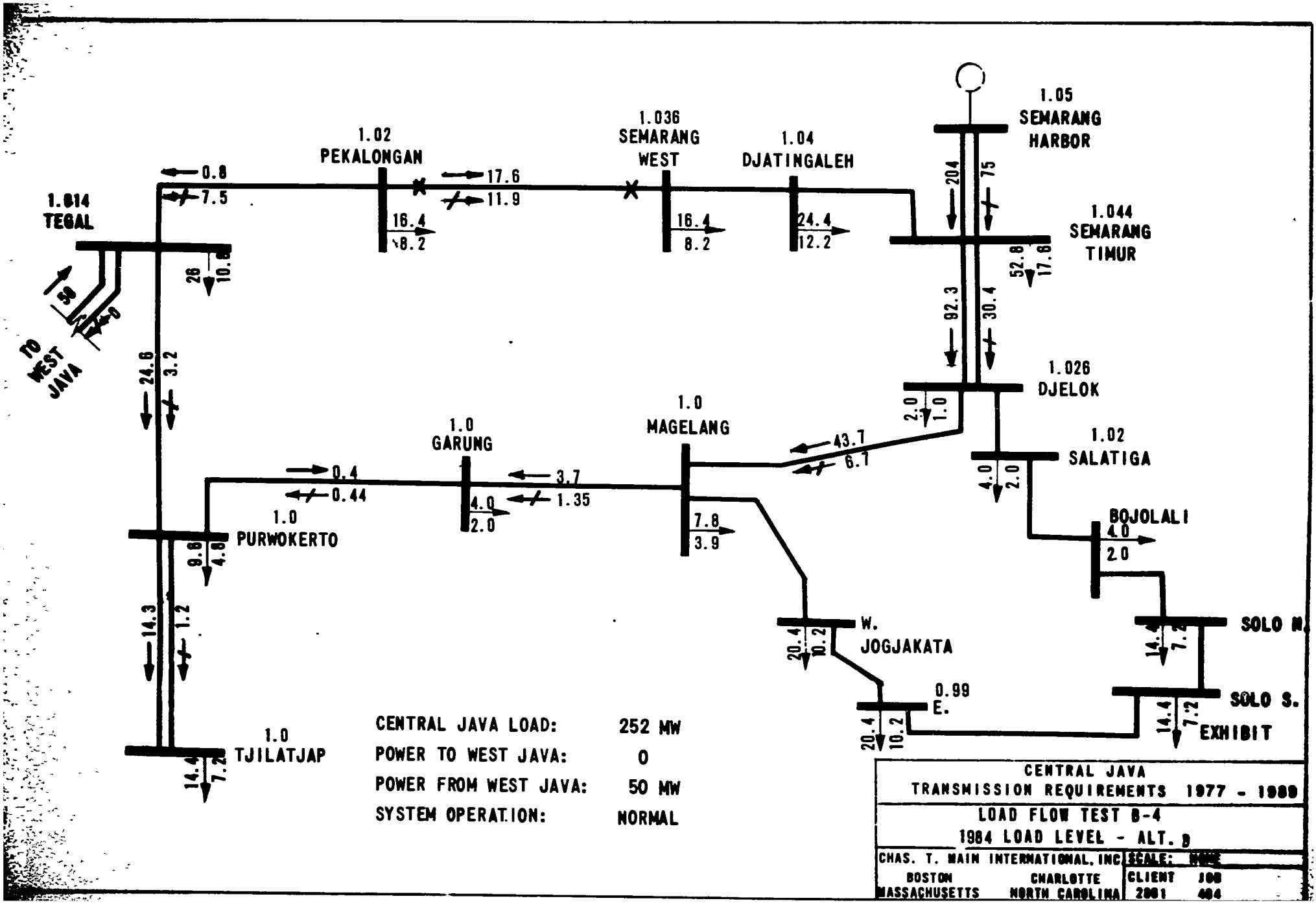
1.814
TEGAL
TO WEST JAVA
50
0
1.02
PEKALONGAN
0.8
7.5
17.6
11.9
16.4
8.2
1.036
SEMARANG WEST
16.4
8.2
1.04
DJATINGALEH
24.4
12.2
1.05
SEMARANG HARBOR
204
75
1.044
SEMARANG TIMUR
52.8
17.6
92.3
30.4
1.026
DJELOK
2.0
1.0
43.7
6.7
1.02
SALATIGA
4.0
2.0
BOJOLALI
4.0
2.0
SOLO N.
14.4
7.2
SOLO S.
14.4
7.2
EXHIBIT
1.0
MAGELANG
7.8
3.9
1.0
GARUNG
3.7
1.35
4.0
2.0
0.4
0.44
1.0
PURWOKERTO
9.6
4.8
1.0
TJILATJAP
14.4
7.2
24.6
3.2
14.3
1.2
26
10.8
W.
JOGJAKATA
20.4
10.2
0.99
E.
20.4
10.2
CENTRAL JAVA LOAD: 252 MW
POWER TO WEST JAVA: 0
POWER FROM WEST JAVA: 50 MW
SYSTEM OPERATION: NORMAL
CENTRAL JAVA
TRANSMISSION REQUIREMENTS 1977 - 1989
LOAD FLOW TEST B-4
1984 LOAD LEVEL - ALT. B
CHAS. T. MAIN INTERNATIONAL, INC.
BOSTON MASSACHUSETTS
CHARLOTTE NORTH CAROLINA
SCALE: NONE
CLIENT 308
2081 404

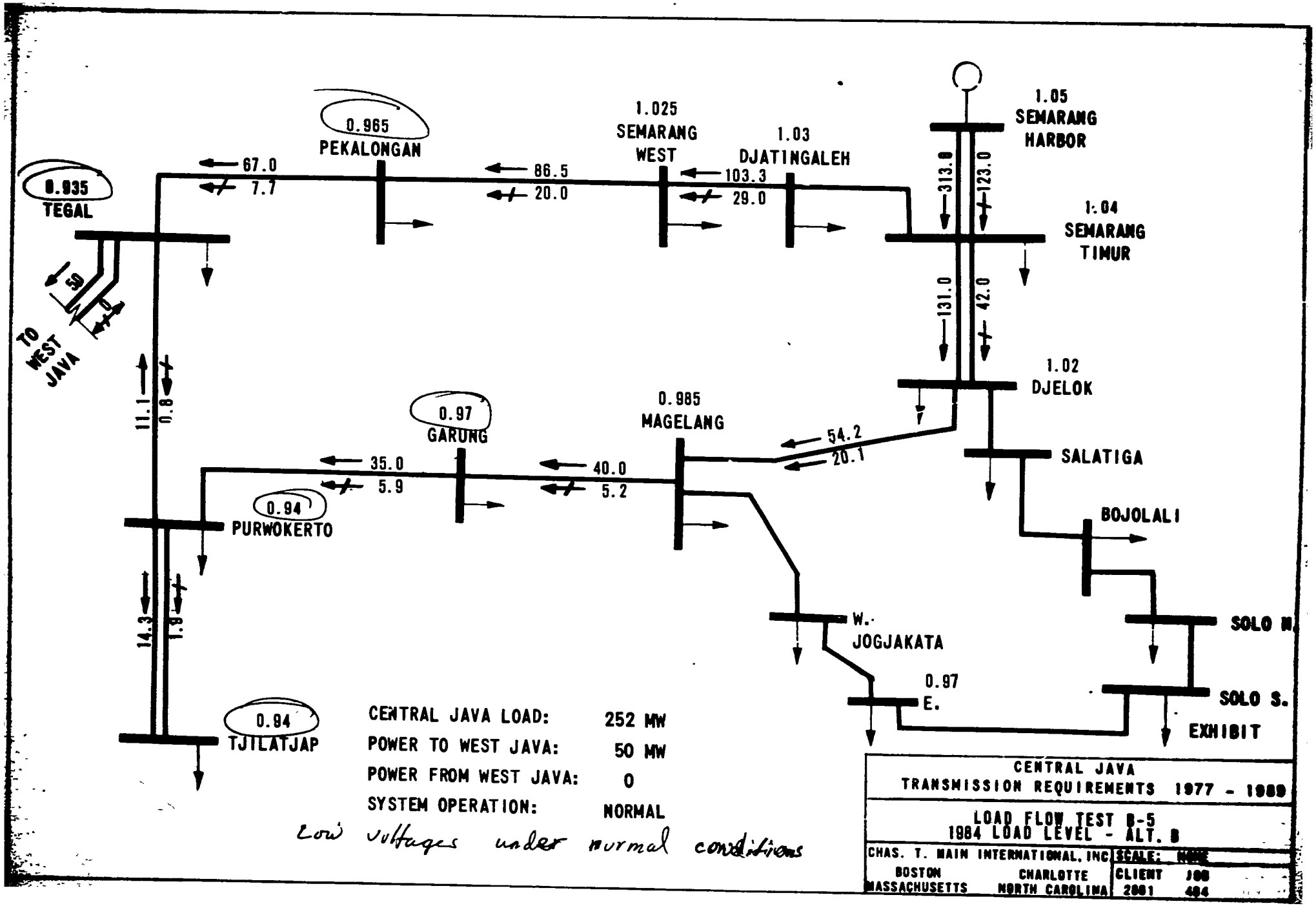
0.935
TEGAL
0.965
PEKALONGAN
1.025
SEMARANG
WEST
1.03
DJATINGALEH
1.05
SEMARANG
HARBOR
1.04
SEMARANG
TIMUR
1.02
DJELOK
0.985
MAGELANG
0.97
GARUNG
0.94
PURWOKERTO
0.94
TJILATJAP
SALATIGA
BOJOLALI
SOLO N.
SOLO S.
EXHIBIT
W.
JOGJAKATA
0.97
E.
TO
WEST
JAVA
50
0
67.0
7.7
86.5
20.0
103.3
29.0
313.0
123.0
131.0
42.0
54.2
20.1
40.0
5.2
35.0
5.9
11.1
0.8
14.3
1.9
CENTRAL JAVA LOAD: 252 MW
POWER TO WEST JAVA: 50 MW
POWER FROM WEST JAVA: 0
SYSTEM OPERATION: NORMAL
Low voltages under normal conditions
CENTRAL JAVA
TRANSMISSION REQUIREMENTS 1977 - 1989
LOAD FLOW TEST B-5
1984 LOAD LEVEL - ALT. B
CHAS. T. MAIN INTERNATIONAL, INC.
BOSTON MASSACHUSETTS
CHARLOTTE NORTH CAROLINA
SCALE: NONE
CLIENT JOB
2861 494

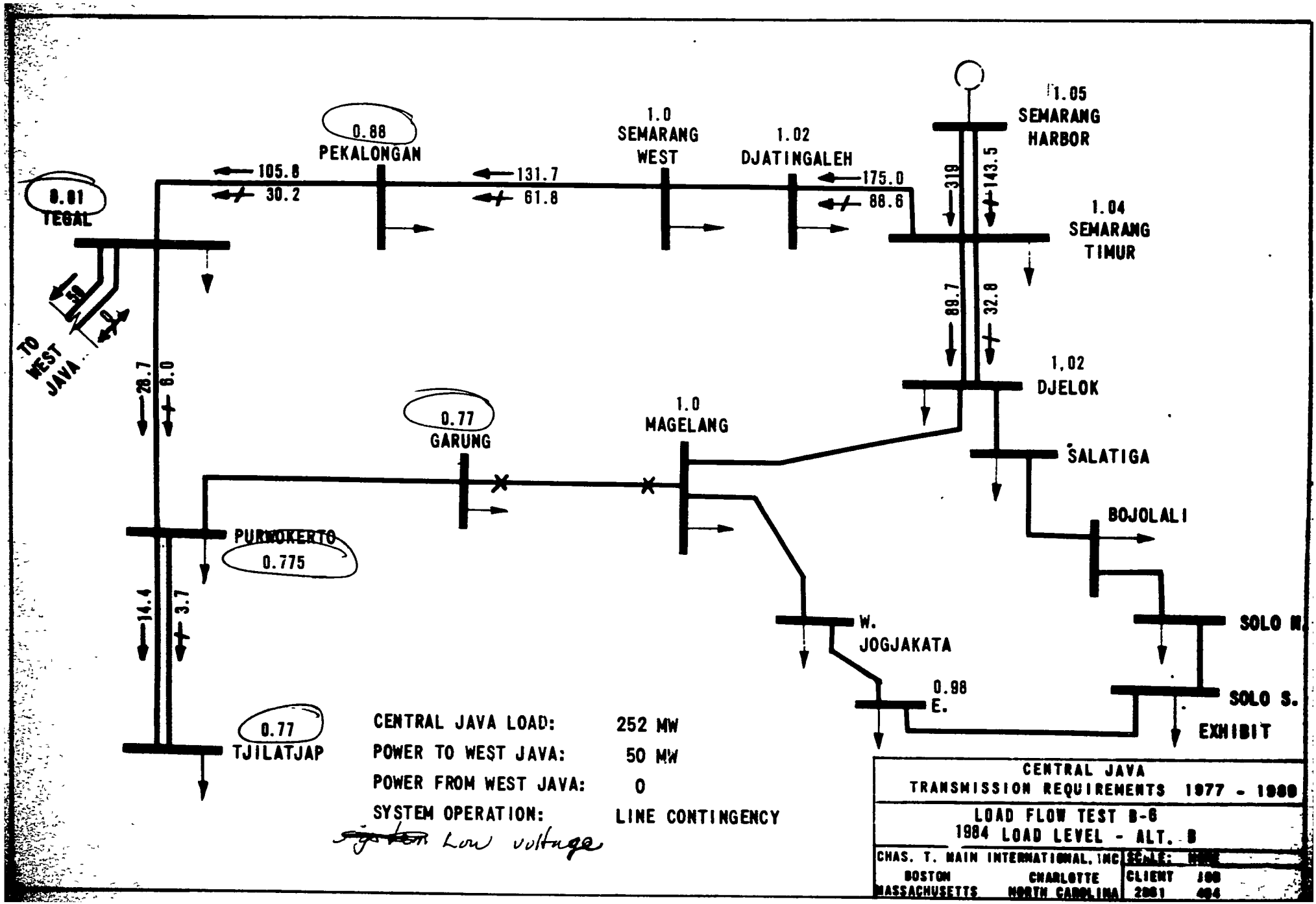
0.81
TEGAL
0.88
PEKALONGAN
1.0
SEMARANG
WEST
1.02
DJATINGALEH
1.05
SEMARANG
HARBOR
1.04
SEMARANG
TIMUR
1,02
DJELOK
SALATIGA
BOJOLALI
SOLO N.
SOLO S.
EXHIBIT
W.
JOGJAKATA
0.98
E.
1.0
MAGELANG
0.77
GARUNG
PURWOKERTO
0.775
0.77
TJILATJAP
TO
WEST
JAVA
105.8
30.2
131.7
61.8
175.0
88.6
319
143.5
89.7
32.8
28.7
8.0
14.4
3.7
50
0
CENTRAL JAVA LOAD: 252 MW
POWER TO WEST JAVA: 50 MW
POWER FROM WEST JAVA: 0
SYSTEM OPERATION: LINE CONTINGENCY
Low voltage
CENTRAL JAVA
TRANSMISSION REQUIREMENTS 1977 - 1988
LOAD FLOW TEST B-6
1984 LOAD LEVEL - ALT. B
CHAS. T. MAIN INTERNATIONAL, INC
BOSTON
MASSACHUSETTS
CHARLOTTE
NORTH CAROLINA
SCALE:
CLIENT
2861
404

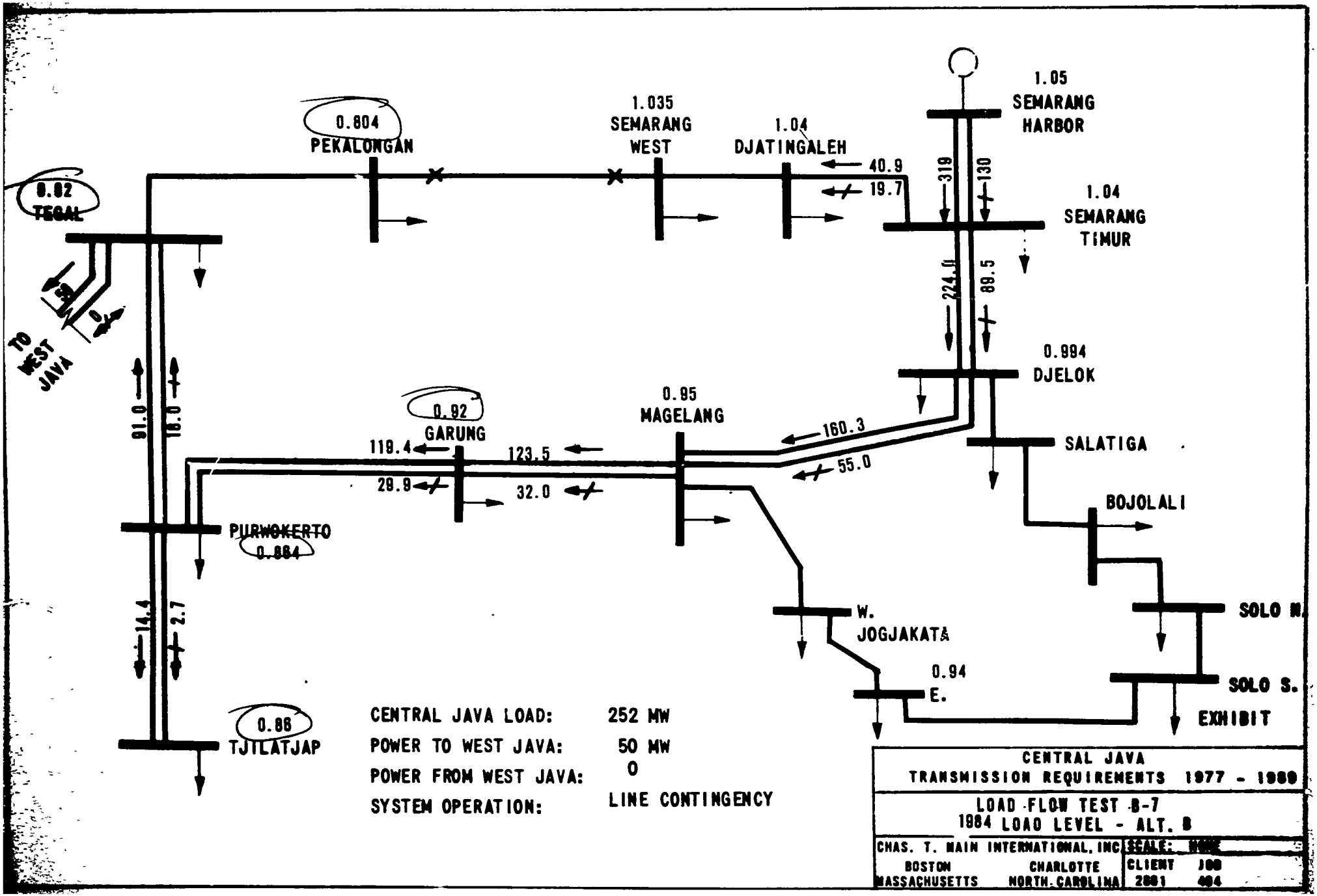
0.804
PEKALONGAN
1.035
SEMARANG
WEST
1.04
DJATINGALEH
40.9
19.7
1.05
SEMARANG
HARBOR
319
130
1.04
SEMARANG
TIMUR
224.0
89.5
0.994
DJELOK
0.82
TEGAL
50
0
TO
WEST
JAVA
91.0
16.0
0.92
GARUNG
0.95
MAGELANG
160.3
55.0
118.4
123.5
29.9
32.0
SALATIGA
BOJOLALI
PURWOKERTO
0.884
14.4
2.7
W.
JOGJAKATA
0.94
E.
SOLO N.
SOLO S.
EXHIBIT
0.86
TJILATJAP
CENTRAL JAVA LOAD: 252 MW
POWER TO WEST JAVA: 50 MW
POWER FROM WEST JAVA: 0
SYSTEM OPERATION: LINE CONTINGENCY
CENTRAL JAVA
TRANSMISSION REQUIREMENTS 1977 - 1989
LOAD FLOW TEST B-7
1984 LOAD LEVEL - ALT. B
CHAS. T. MAIN INTERNATIONAL, INC.
BOSTON MASSACHUSETTS
CHARLOTTE NORTH CAROLINA
SCALE:
CLIENT
JOB
2881
404

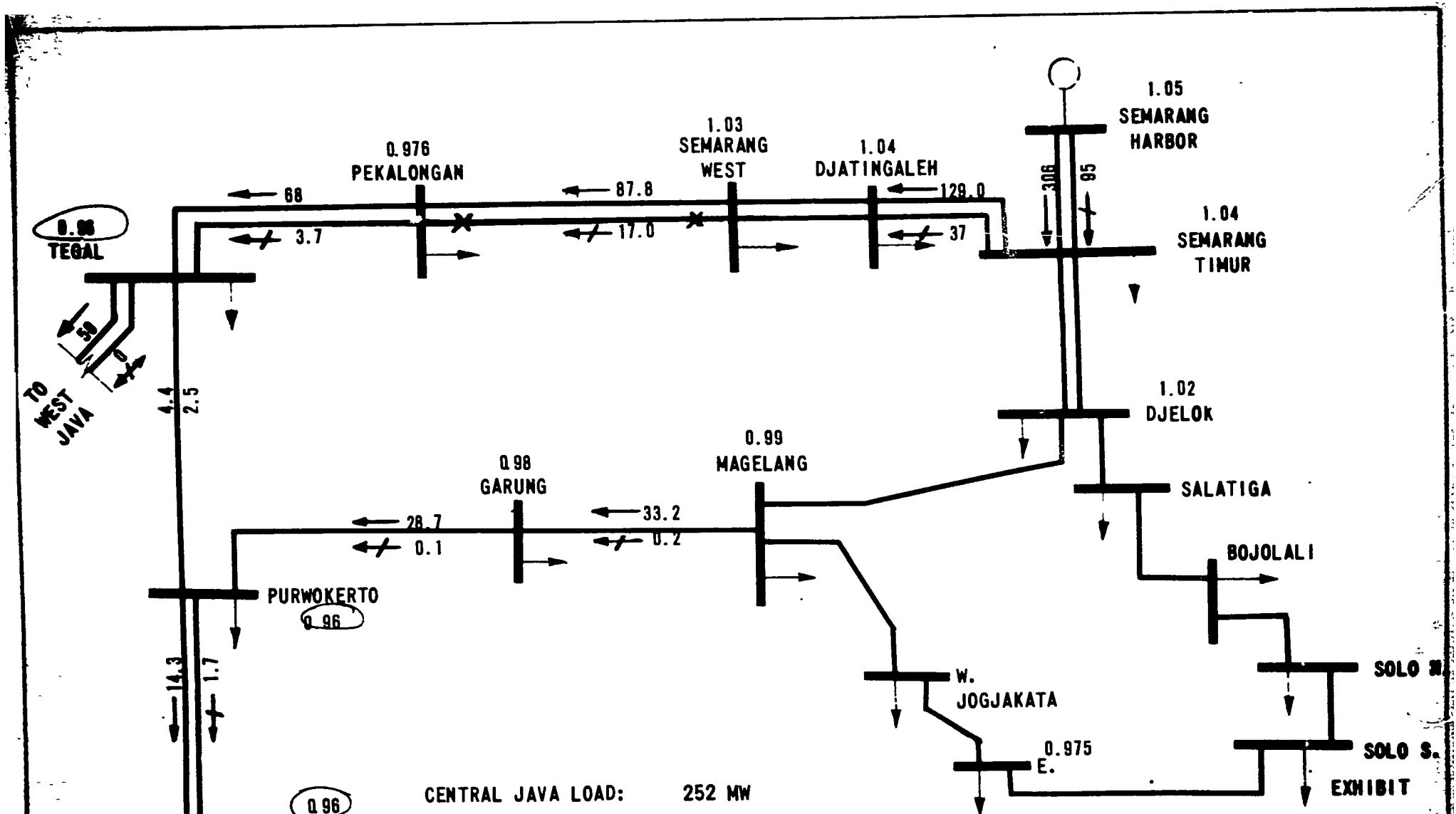
1.05
SEMARANG
HARBOR
1.03
SEMARANG
WEST
1.04
DJATINGALEH
0.976
PEKALONGAN
68
87.8
129.0
3.7
17.0
37
306
95
1.04
SEMARANG
TIMUR
TEGAL
50
0
TO
WEST
JAVA
4.4
2.5
1.02
DJELOK
0.99
MAGELANG
0.98
GARUNG
SALATIGA
28.7
33.2
0.1
0.2
BOJOLALI
PURWOKERTO
0.96
14.3
1.7
W.
JOGJAKATA
SOLO S.
0.975
E.
EXHIBIT
0.96
TJILATJAP
CENTRAL JAVA LOAD: 252 MW
POWER TO WEST JAVA: 50 MW
POWER FROM WEST JAVA: 0
SYSTEM OPERATION: LINE CONTINENCY
CENTRAL JAVA
TRANSMISSION REQUIREMENTS 1977 - 1989
LOAD FLOW TEST B-8
1984 LOAD LEVEL - ALT. B
CHAS. T. MAIN INTERNATIONAL, INC.
BOSTON
MASSACHUSETTS
CHARLOTTE
NORTH CAROLINA
SCALE:
CLIENT
2881
484

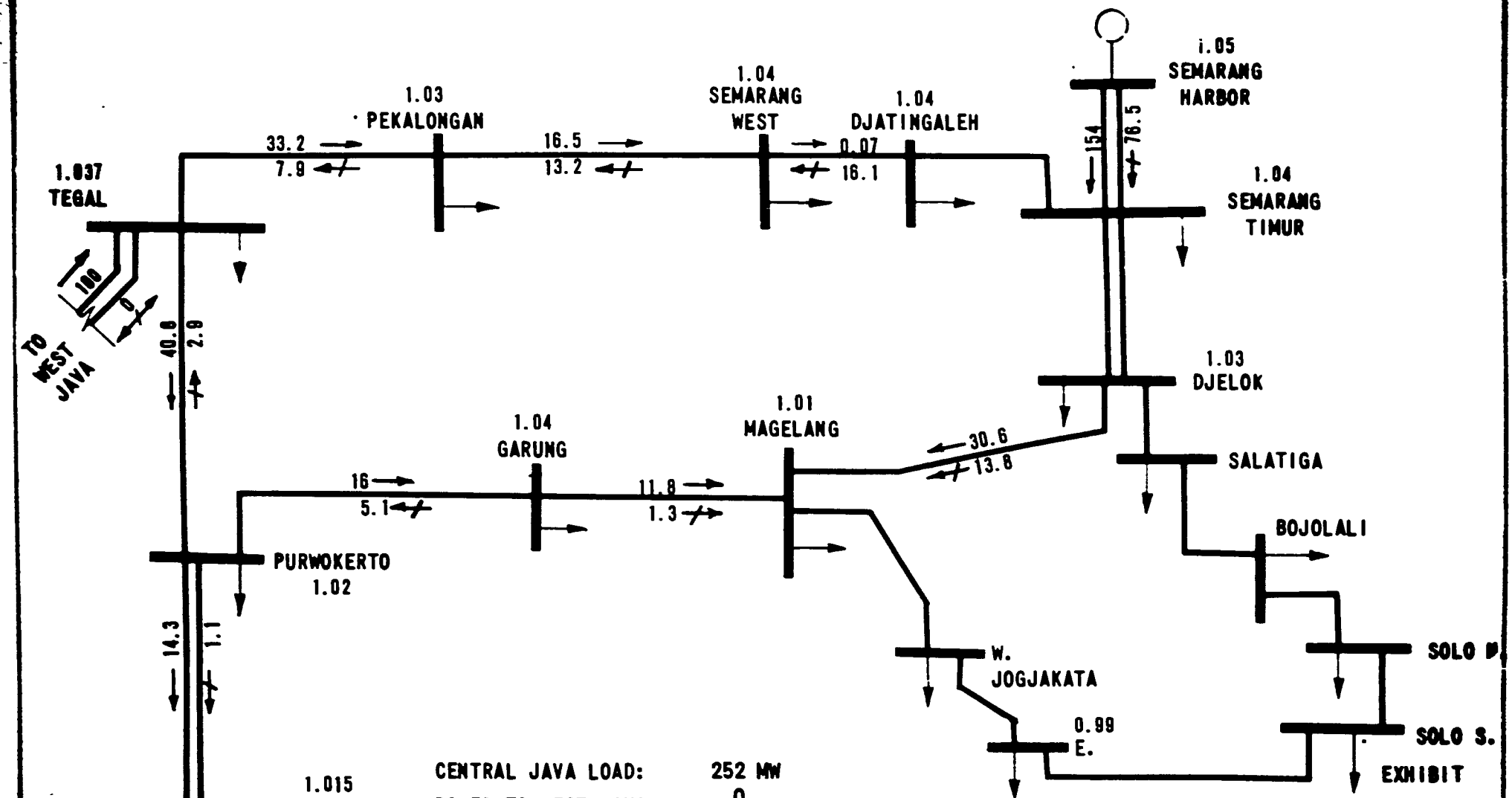
1.037
TEGAL
1.03
PEKALONGAN
1.04
SEMARANG
WEST
1.04
DJATINGALEH
1.05
SEMARANG
HARBOR
1.04
SEMARANG
TIMUR
1.03
DJELOK
SALATIGA
BOJOLALI
SOLO P.
SOLO S.
EXHIBIT
W.
JOGJAKATA
0.99
E.
1.01
MAGELANG
1.04
GARUNG
PURWOKERTO
1.02
1.015
TJILATJAP
TO
WEST
JAVA
100
0
33.2
7.9
16.5
13.2
0.07
16.1
154
76.5
30.6
13.8
16
5.1
11.8
1.3
40.8
2.0
14.3
1.1
CENTRAL JAVA LOAD: 252 MW
POWER TO WEST JAVA: 0
POWER FROM WEST JAVA: 100 MW
SYSTEM OPERATION: NORMAL
CENTRAL JAVA
TRANSMISSION REQUIREMENTS 1977 - 1989
LOAD FLOW TEST B-9
1984 LOAD LEVEL - ALT.B
CHAS. T. MAIN INTERNATIONAL, INC
BOSTON
MASSACHUSETTS
CHARLOTTE
NORTH CAROLINA
SCALE:
CLIENT
2081
404

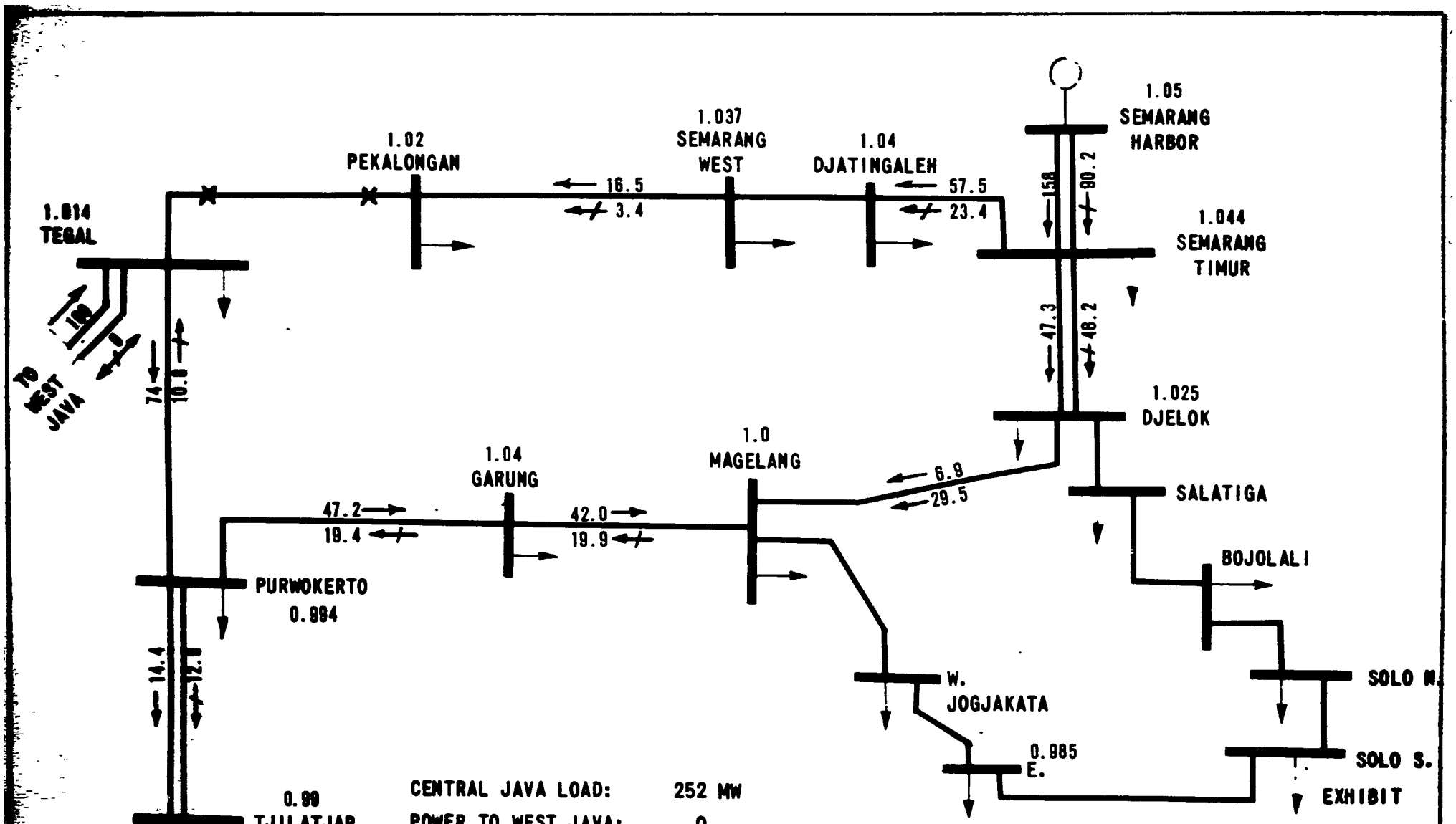
1.814
TEGAL
TO WEST JAVA
100
1.02
PEKALONGAN
16.5
3.4
1.037
SEMARANG WEST
1.04
DJATINGALEH
57.5
23.4
1.05
SEMARANG HARBOR
158
90.2
1.044
SEMARANG TIMUR
47.3
46.2
1.025
DJELOK
6.9
29.5
SALATIGA
BOJOLALI
SOLO N.
SOLO S.
EXHIBIT
1.0
MAGELANG
1.04
GARUNG
47.2
19.4
42.0
19.9
PURWOKERTO
0.994
74
10.1
14.4
12.1
0.99
TJILATJAP
W.
JOGJAKATA
0.985
E.
CENTRAL JAVA LOAD: 252 MW
POWER TO WEST JAVA: 0
POWER FROM WEST JAVA: 100 MW
SYSTEM OPERATION: LINE CONTINGENCY
CENTRAL JAVA
TRANSMISSION REQUIREMENTS 1977 - 1989
LOAD FLOW TEST B-10
1984 LOAD LEVEL - ALT.B
CHAS. T. MAIN INTERNATIONAL, INC.
BOSTON MASSACHUSETTS
CHARLOTTE NORTH CAROLINA
SCALE: NONE
CLIENT 2861
JOB 484

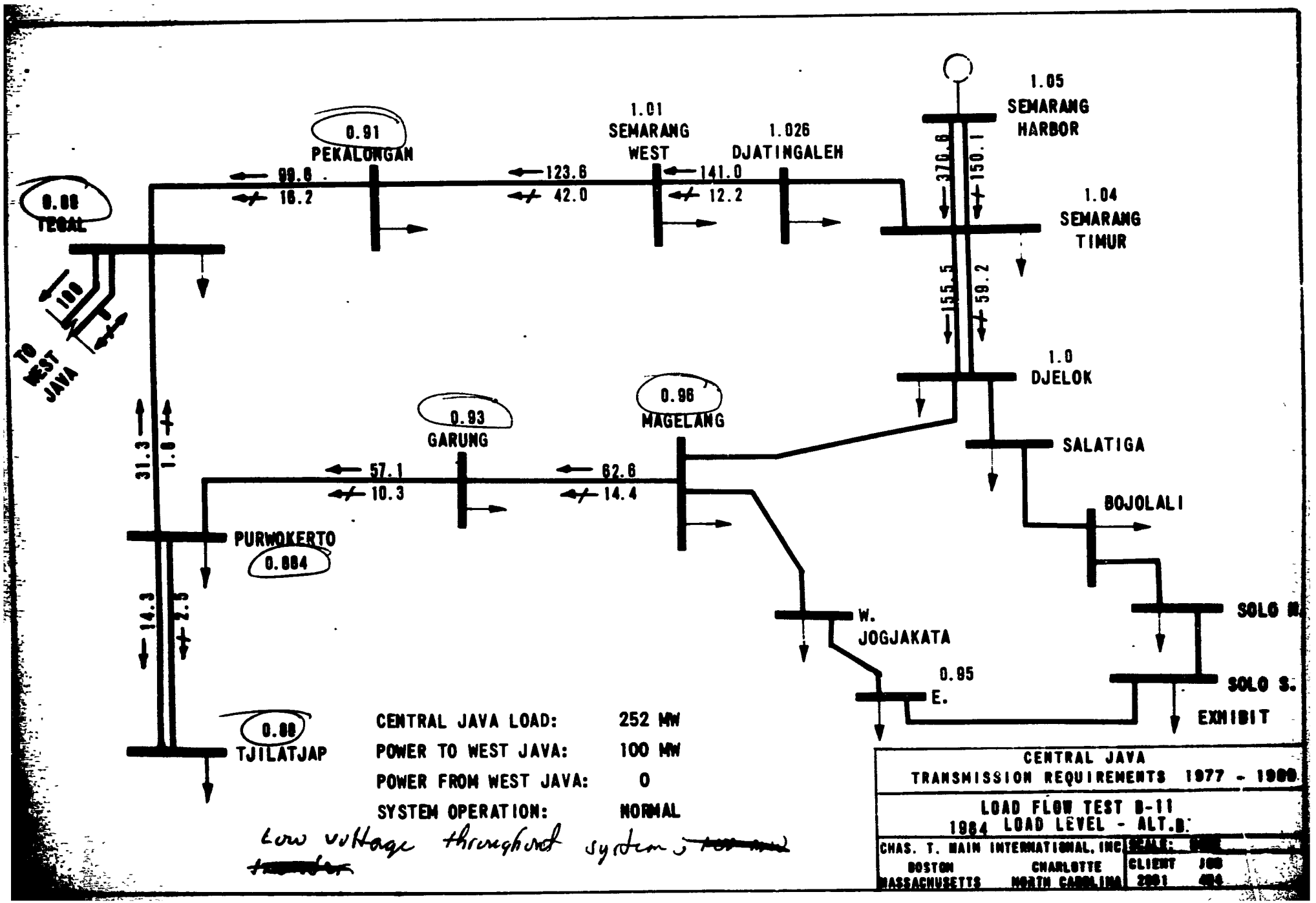
0.88
TEGAL
0.91
PEKALONGAN
1.01
SEMARANG
WEST
1.026
DJATINGALEH
1.05
SEMARANG
HARBOR
1.04
SEMARANG
TIMUR
1.0
DJELOK
SALATIGA
BOJOLALI
SOLO N.
SOLO S.
EXHIBIT
0.95
E.
W.
JOGJAKATA
0.96
MAGELANG
0.93
GARUNG
PURWOKERTO
0.884
0.88
TJILATJAP
TO
WEST
JAVA
100
99.6
16.2
123.6
42.0
141.0
12.2
370.6
150.1
155.5
59.2
57.1
10.3
62.6
14.4
31.3
1.8
14.3
2.5
CENTRAL JAVA LOAD: 252 MW
POWER TO WEST JAVA: 100 MW
POWER FROM WEST JAVA: 0
SYSTEM OPERATION: NORMAL
Low voltage throughout system;
CENTRAL JAVA
TRANSMISSION REQUIREMENTS 1977 - 1989
LOAD FLOW TEST B-11
1984 LOAD LEVEL - ALT.B
CHAS. T. MAIN INTERNATIONAL, INC.
BOSTON
MASSACHUSETTS
CHARLOTTE
NORTH CAROLINA
CLIENT
2001

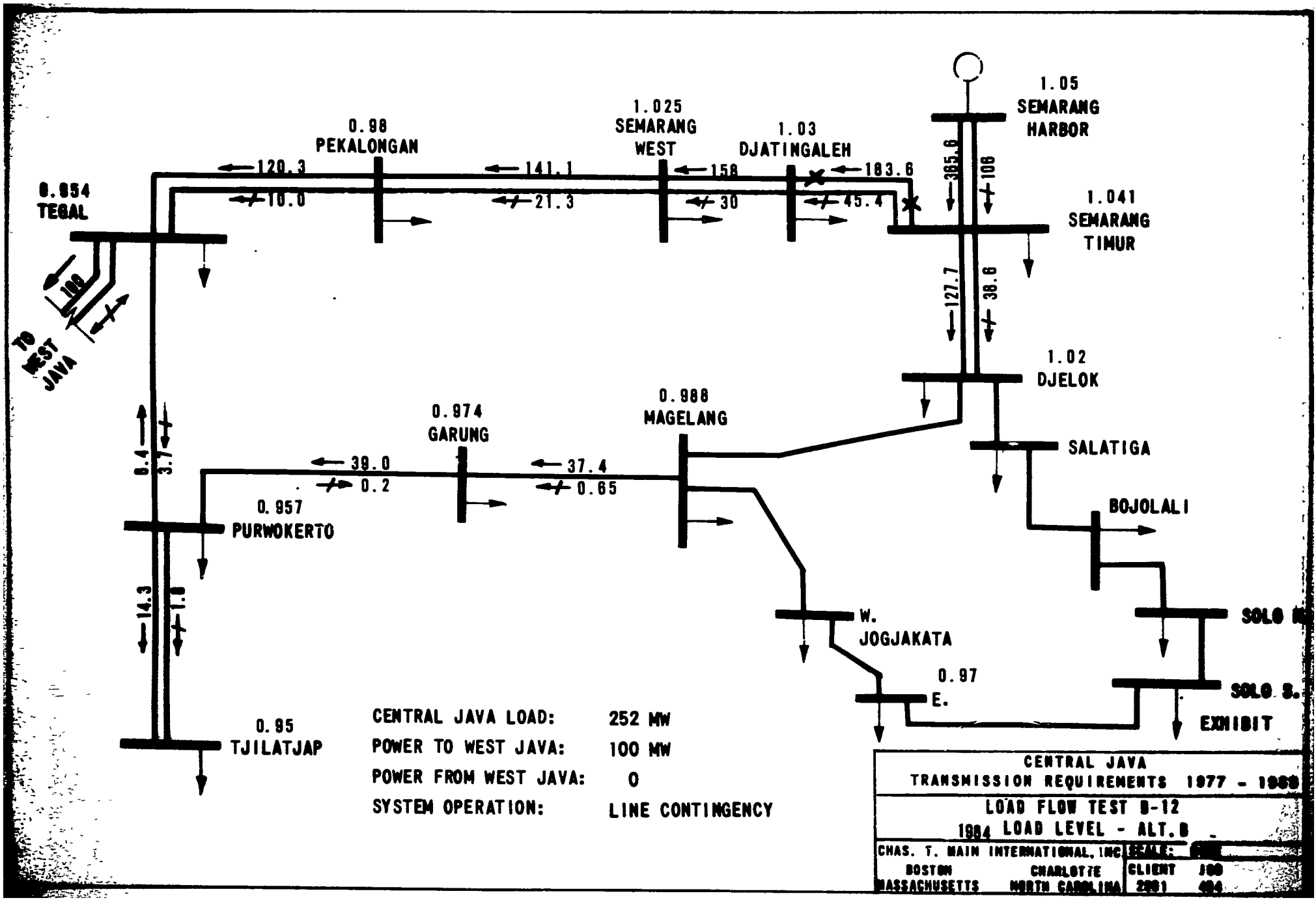
0.954
TEGAL
0.98
PEKALONGAN
1.025
SEMARANG
WEST
1.03
DJATINGALEH
1.05
SEMARANG
HARBOR
1.041
SEMARANG
TIMUR
1.02
DJELOK
SALATIGA
BOJOLALI
SOLO N.
SOLO S.
EXHIBIT
0.988
MAGELANG
0.974
GARUNG
0.957
PURWOKERTO
0.95
TJILATJAP
W.
JOGJAKATA
0.97
E.
TO
WEST
JAVA
100
120.3
10.0
141.1
21.3
158
30
183.6
45.4
365.6
106
127.7
38.6
39.0
0.2
37.4
0.65
8.4
3.7
14.3
1.1
CENTRAL JAVA LOAD: 252 MW
POWER TO WEST JAVA: 100 MW
POWER FROM WEST JAVA: 0
SYSTEM OPERATION: LINE CONTINGENCY
CENTRAL JAVA
TRANSMISSION REQUIREMENTS 1977 - 1989
LOAD FLOW TEST B-12
1984 LOAD LEVEL - ALT. B
CHAS. T. MAIN INTERNATIONAL, INC.
BOSTON
MASSACHUSETTS
CHARLOTTE
NORTH CAROLINA
SCALE:
CLIENT
2961

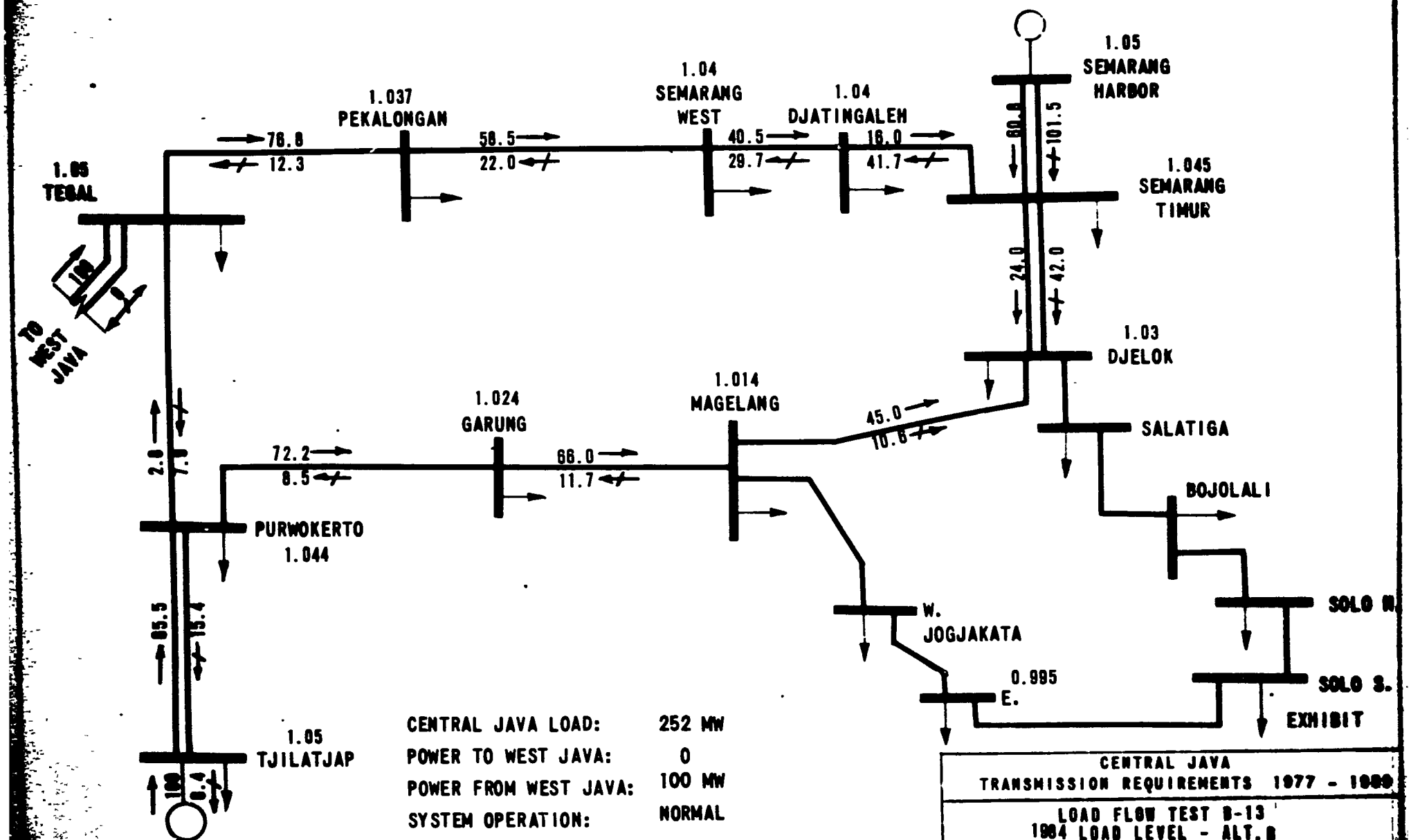

CENTRAL JAVA LOAD: 252 MW
POWER TO WEST JAVA: 0
POWER FROM WEST JAVA: 100 MW
SYSTEM OPERATION: NORMAL

CENTRAL JAVA
TRANSMISSION REQUIREMENTS 1977 - 1989

LOAD FLOW TEST B-13
1984 LOAD LEVEL - ALT. B

CHAS. T. MAIN INTERNATIONAL, INC.
BOSTON MASSACHUSETTS
CHARLOTTE NORTH CAROLINA

SCALE:
CLIENT JOB
2001 404

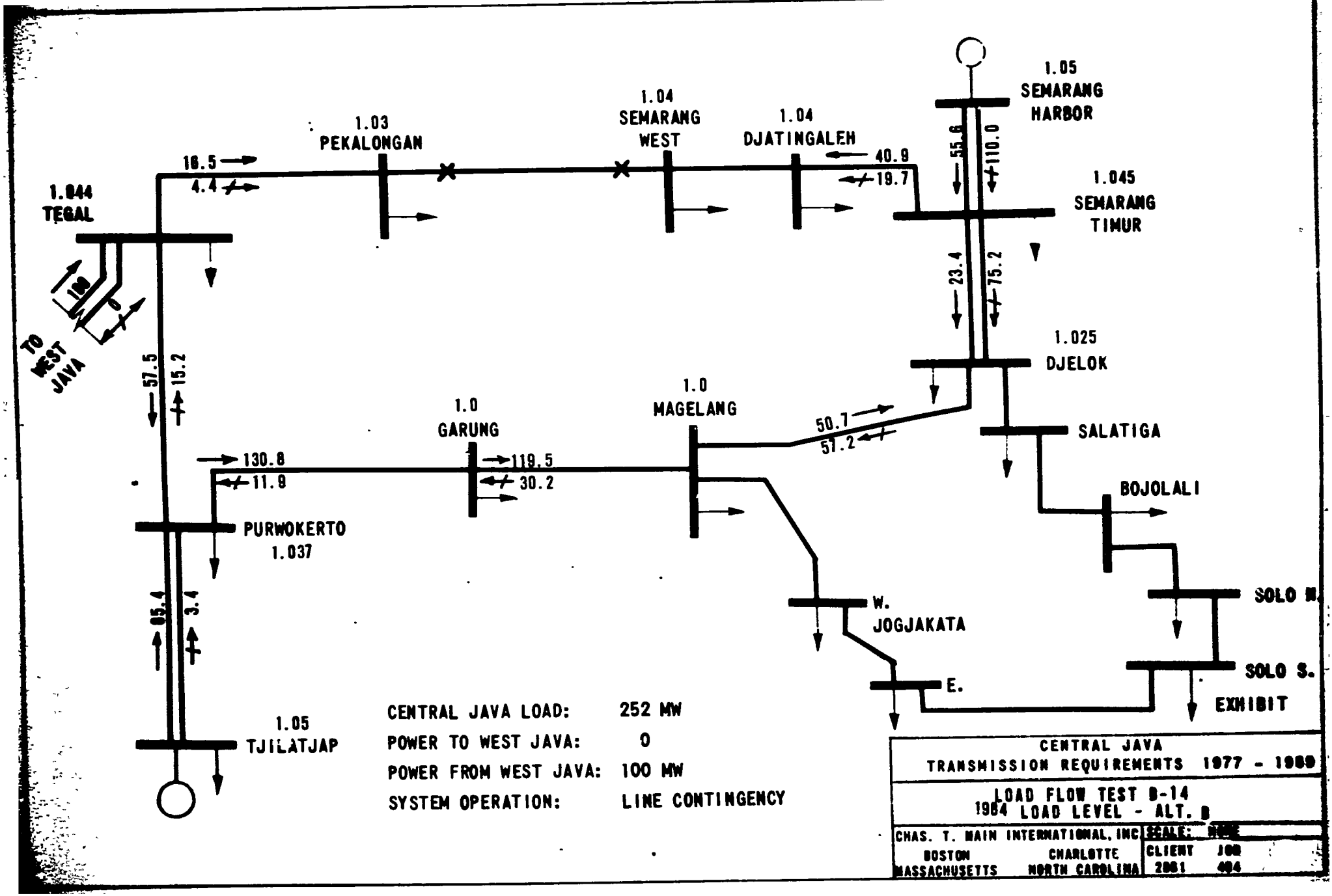
1.05
SEMARANG
HARBOR
1.04
SEMARANG
WEST
1.04
DJATINGALEH
1.03
PEKALONGAN
1.044
TEGAL
16.5
4.4
40.9
19.7
55.6
110.0
1.045
SEMARANG
TIMUR
100
0
TO
WEST
JAVA
23.4
75.2
1.025
DJELOK
57.5
15.2
1.0
MAGELANG
1.0
GARUNG
50.7
51.2
SALATIGA
130.8
11.9
119.5
30.2
BOJOLALI
PURWOKERTO
1.037
W.
JOGJAKATA
SOLO N.
05.4
3.4
SOLO S.
E.
EXHIBIT
1.05
TJILATJAP
CENTRAL JAVA LOAD: 252 MW
POWER TO WEST JAVA: 0
POWER FROM WEST JAVA: 100 MW
SYSTEM OPERATION: LINE CONTINGENCY
CENTRAL JAVA
TRANSMISSION REQUIREMENTS 1977 - 1989
LOAD FLOW TEST B-14
1984 LOAD LEVEL - ALT. B
CHAS. T. MAIN INTERNATIONAL, INC.
BOSTON
MASSACHUSETTS
CHARLOTTE
NORTH CAROLINA
SCALE:
CLIENT
2861
404

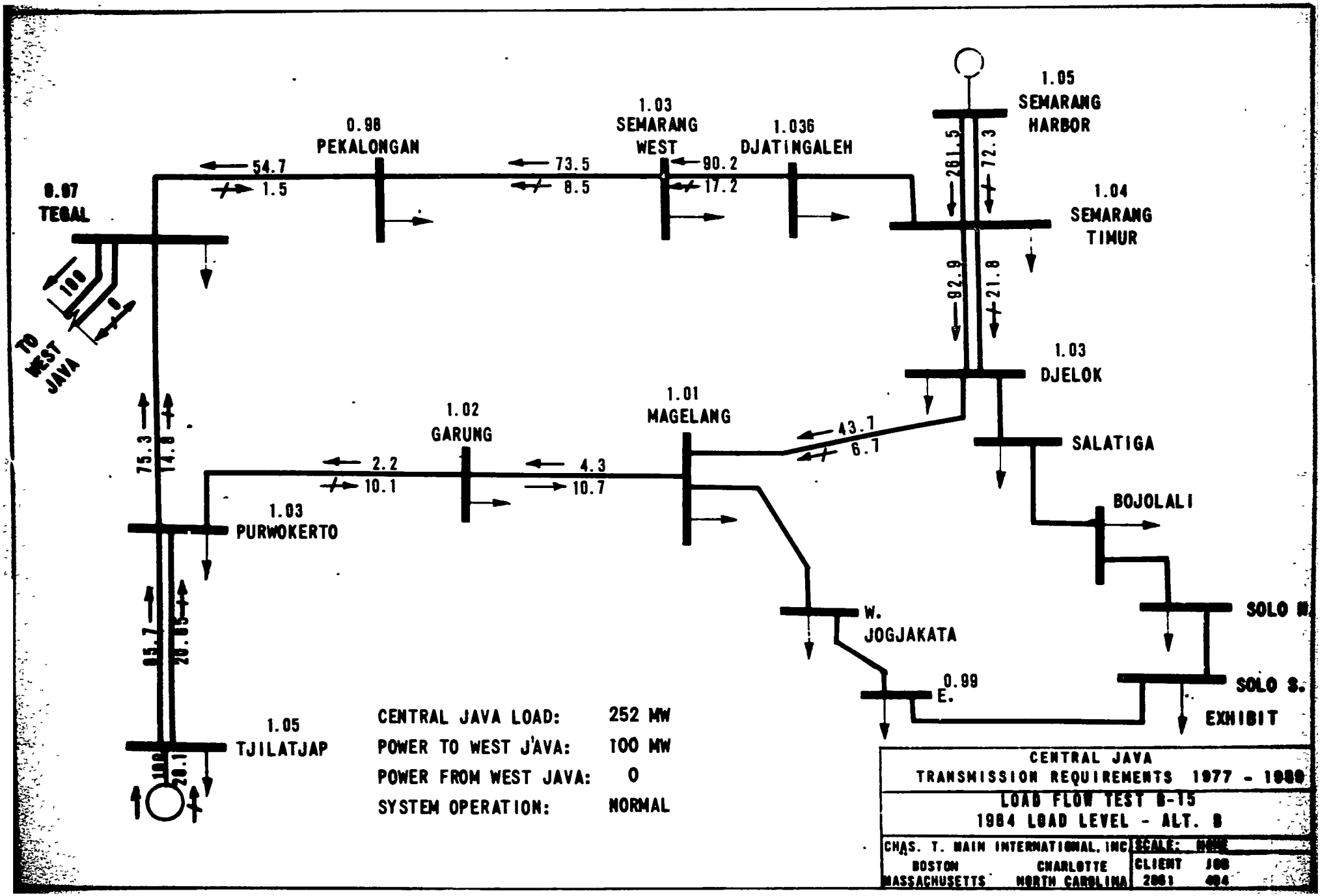
0.97
TEGAL
0.98
PEKALONGAN
1.03
SEMARANG
WEST
1.036
DJATINGALEH
1.05
SEMARANG
HARBOR
1.04
SEMARANG
TIMUR
1.03
DJELOK
SALATIGA
BOJOLALI
SOLO N.
SOLO S.
EXHIBIT
0.99
E.
W.
JOGJAKATA
1.01
MAGELANG
1.02
GARUNG
1.03
PURWOKERTO
1.05
TJILATJAP
TO
WEST
JAVA
100
54.7
1.5
73.5
8.5
90.2
17.2
261.5
72.3
92.9
21.8
43.7
6.7
2.2
10.1
4.3
10.7
75.3
14.8
85.7
20.15
20.1
CENTRAL JAVA LOAD: 252 MW
POWER TO WEST J'AVA: 100 MW
POWER FROM WEST JAVA: 0
SYSTEM OPERATION: NORMAL
CENTRAL JAVA
TRANSMISSION REQUIREMENTS 1977 - 1989
LOAD FLOW TEST B-15
1984 LOAD LEVEL - ALT. B
CHAS. T. MAIN INTERNATIONAL, INC
BOSTON
MASSACHUSETTS
CHARLOTTE
NORTH CAROLINA
SCALE:
CLIENT
JOB
2861
404

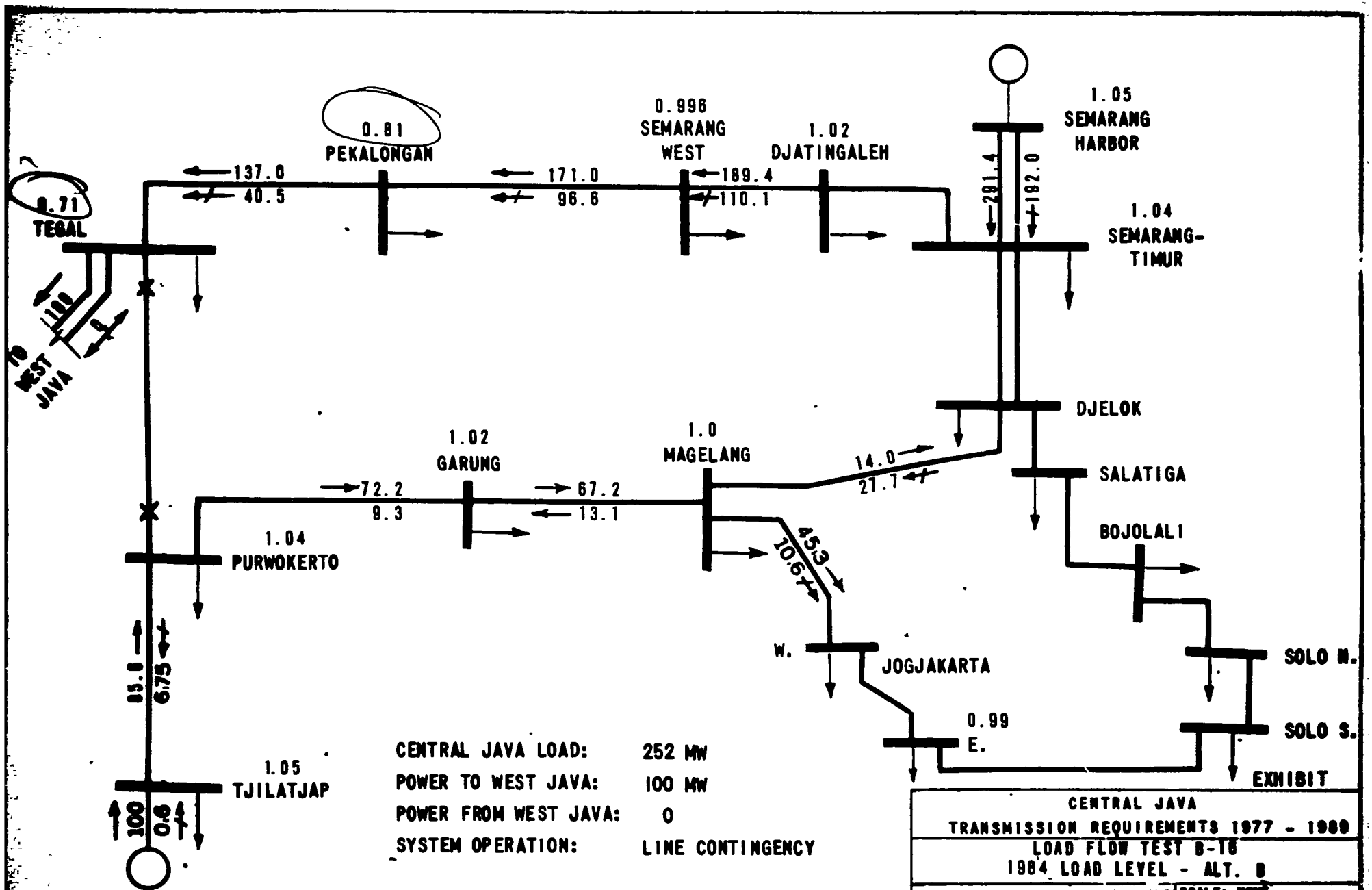
0.81
PEKALONGAN
0.996
SEMARANG
WEST
1.02
DJATINGALEH
1.05
SEMARANG
HARBOR
1.04
SEMARANG-
TIMUR
0.71
TEGAL
137.0
40.5
171.0
96.6
189.4
110.1
291.4
192.0
100
8
TO
WEST
JAVA
DJELOK
SALATIGA
BOJOLALI
1.02
GARUNG
1.0
MAGELANG
14.0
27.7
72.2
9.3
67.2
13.1
1.04
PURWOKERTO
45.3
10.6
W.
JOGJAKARTA
SOLO N.
SOLO S.
0.99
E.
85.8
6.75
1.05
TJILATJAP
100
0.6
EXHIBIT
CENTRAL JAVA LOAD: 252 MW
POWER TO WEST JAVA: 100 MW
POWER FROM WEST JAVA: 0
SYSTEM OPERATION: LINE CONTINGENCY
CENTRAL JAVA
TRANSMISSION REQUIREMENTS 1977 - 1989
LOAD FLOW TEST B-16
1984 LOAD LEVEL - ALT. B
CHAS. T. MAIN INTERNATIONAL, INC.
SCALE: NONE
BOSTON MASSACHUSETTS
CHARLOTTE NORTH CAROLINA
CLIENT 188
2061 404

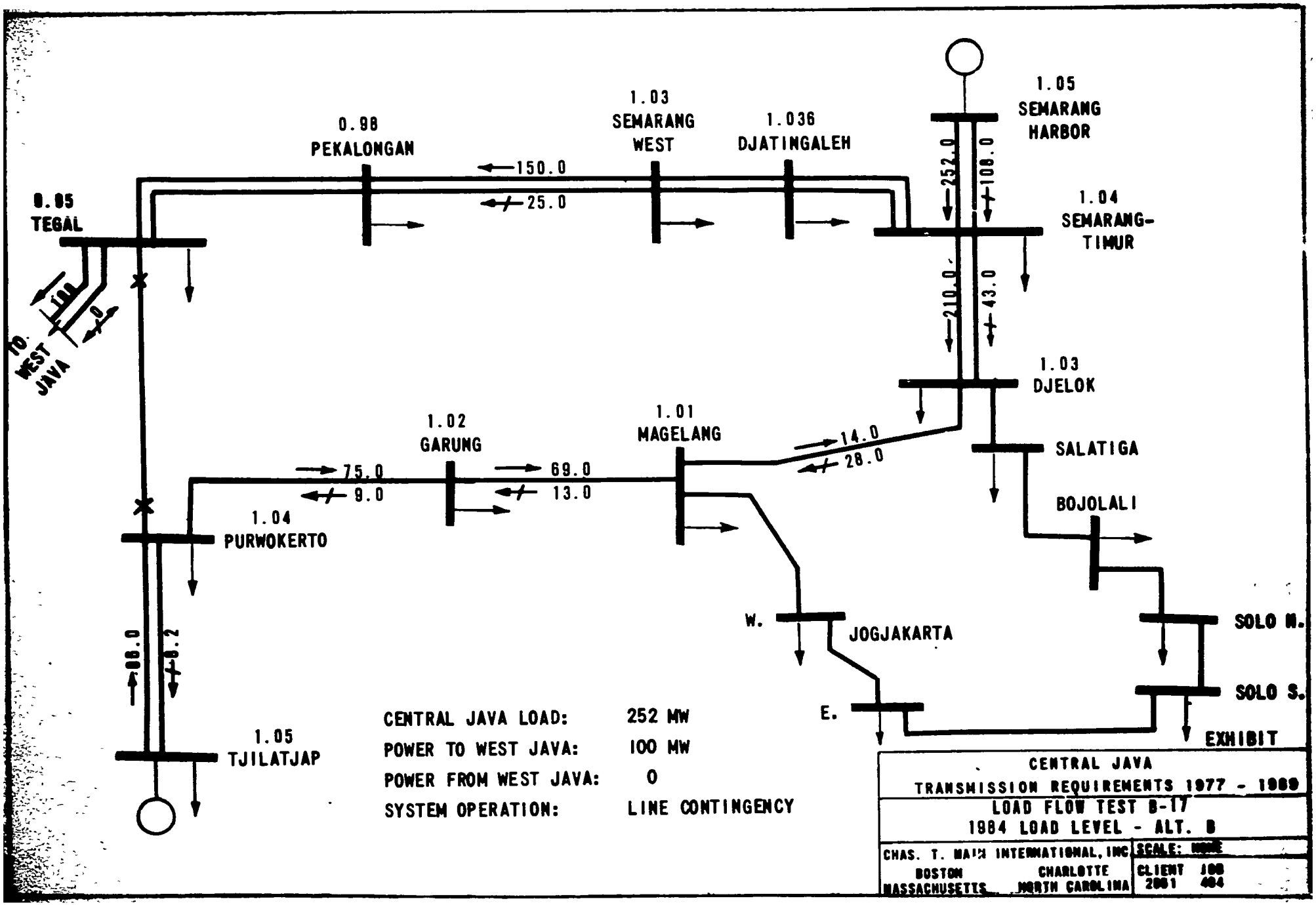
0.98
PEKALONGAN
1.03
SEMARANG
WEST
1.036
DJATINGALEH
1.05
SEMARANG
HARBOR
1.04
SEMARANG-
TIMUR
1.03
DJELOK
SALATIGA
BOJOLALI
SOLO N.
SOLO S.
EXHIBIT
E.
W.
JOGJAKARTA
1.01
MAGELANG
1.02
GARUNG
1.04
PURWOKERTO
1.05
TJILATJAP
0.95
TEGAL
TO
WEST
JAVA
150.0
25.0
252.0
108.0
210.0
43.0
14.0
28.0
75.0
9.0
69.0
13.0
86.0
8.2
CENTRAL JAVA LOAD: 252 MW
POWER TO WEST JAVA: 100 MW
POWER FROM WEST JAVA: 0
SYSTEM OPERATION: LINE CONTINGENCY
CENTRAL JAVA
TRANSMISSION REQUIREMENTS 1977 - 1989
LOAD FLOW TEST B-17
1984 LOAD LEVEL - ALT. B
CHAS. T. MAIN INTERNATIONAL, INC.
BOSTON MASSACHUSETTS
CHARLOTTE NORTH CAROLINA
SCALE: NONE
CLIENT 188
2061 464