BIBLIOGRAPHIC DATA SHEET PN-AAH-637

APPROPRIATE TECHNOLOGY IN BOLIVIA; RESULTS, RECOMMENDATIONS AND REPORTS; THE VITA SURVEY OF AT IN AGRICULTURE, SMALL SCALE INDUSTRY AND ARTISANRY, WATER SUPPLY AND SANITATION AND ENERGY

PERSONAL AUTHORS -

CORPORATE AUTHORS - VOLUNTEERS IN TECHNICAL ASSISTANCE (VITA)

1980, 388P.

ARC NUMBER - BL609.V943
CONTRACT NUMBER - AID-511-179-T
PROJECT NUMBERS -
SUBJECT CLASS - TC000000G512

DESCRIPTORS -

BOLIVIA	ENERGY
MODELS	CRAFTSMAN
DIFFUSION	INSTITUTIONS
SANITATION	APPROPRIATE TECHNOLOGY
WATER SUPPLY	TECHNOLOGY TRANSFER
RURAL WATER SUPPLY	AGRICULTURAL TECHNOLOGY
SMALL SCALE INDUSTRIES	RURAL INDUSTRIES

PN-AAH-627

APPROPRIATE TECHNOLOGY IN BOLIVIA: RESULTS, RECOMMENDATIONS AND REPORTS THE VITA SURVEY OF AT IN AGRICULTURE, SMALL SCALE INDUSTRY AND ARTISANRY, WATER SUPPLY AND SANITATION AND ENERGY

Prepared for
Agency for International Development/Bolivia
Contract No. 511-179 T

Prepared by
Volunteers In Technical Assistance

February 28, 1980

Volunteers in Technical Assistance
3706 Rhode Island Avenue
Mount Rainier, Maryland 20822 USA

TABLE OF CONTENTS

LIST OF FIGURES

LIST OF MAPS

LIST OF TABLES

ACKNOWLEDGEMENTS i

PREFACE ii

CHAPTER ONE: RESULTS 1-6

THE VITA MODEL OF AT TRANSFER/ADAPTATION/DIFFUSION/ ACCEPTANCE PROCESS 1-3

THE VITA AT BOLIVIA SURVEY 3-6

CHAPTER TWO: RECOMMENDATIONS 7-35

LOG FRAME FOR PROPOSED APPROPRIATE TECHNOLOGY PROGRAM FOR BOLIVIA 36

AT DOCUMENTATION CENTER 8-11

Background 8-9

Location 9-10

Index & Catalogue 10-11

SMALL PROJECTS FUND: FEATURES AND CRITERIA 12-13

SMALL PROJECTS FUND GRANT PROGRAM 14-15

Concept Development 14

Research and Development 14

Production and Market Studies 14

Diffusion Techniques 15

SMALL PROJECTS FUND CONTRACT PROGRAM 15

AGRICULTURE: A PROGRAMMATIC AT INITIATIVE 16-18

RURAL SMALL SCALE INDUSTRY AND ARTISANRY: A PROGRAMMATIC AT INITIATIVE 19-22
Pre-Feasibility Study Phase 19
Screening Potential Rural Industries from Existing Plans 19
On Site Feasibility Surveys of Community Pilot Sites 20
Product Feasibility Surveys 20
Types of Industries 20
Pre-Implementation Phase 21

WATER AND SANITATION: A PROGRAMMATIC AT INITIATIVE 23-27
Introduction of AT into Water and Sanitation Planning 23
Promotion of Promising Current AT in Rural Water Supply 23
DEMONSTRATION PROJECT IN WATER SUPPLY FOR SANTA CRUZ 23
Data Collection: Santa Cruz Ground Water Mapping 24
Adaptation of Ingavi Well Pump to Santa Cruz 25
Implementation of Documentation Project in Water Supply for Santa Cruz 25

PILOT PROGRAM TO INTRODUCE COMPOST PRIVIES 26

ENERGY: A PROGRAMMATIC AT INITIATIVE 28-30

DATA COLLECTION - PHASE ONE 28

DATA COLLECTION - PHASE TWO 28

INFORMATION TRANSFER 29

ADAPTATION 29

DIFFUSION 29

ALTERNATIVES TO THE OCT AS COUNTERPART INSTITUTIONS 31

ALTERNATIVES TO THE MODEL OF LOCATING THE AT ADVISORS IN A SINGLE INSTITUTION: THE MODEL OF MULTIPLE COUNTERPART INSTITUTIONS 32

SHORT-TERM TECHNICAL ASSISTANTS & CONSULTANTS 33

QUALIFICATIONS FOR THE AT PROGRAM ADVISORS 34
Qualifications of the AT Program Administrator 34
General Qualifications for All Four Sectoral AT Advisors 34
Figure II-1 Log Frame 36-50

REPORTS 50

CHAPTER THREE: AGRICULTURE: SECTOR OVERVIEW 51-104

BACKGROUND 51
PHYSICAL GEOGRAPHY 51
POPULATION DISTRIBUTION 51
LANDS AND SOIL 52
FORESTS AND VEGETATION 52
WATER RESOURCES 56
RAINFALL AND CLIMATE 56
BOLIVIAN AGRICULTURE 57
CROPS IN DIFFERENT AGRICULTURAL REGIONS 57
Crop Quantities and Markets 59
Livestock 59
IRRIGATION 60
AQUACULTURE 60

INSTITUTIONS 61
GOVERNMENT AGENCIES 61

Parastatal Organizations 62
Department Development Corporations 62
EDUCATIONAL INSTITUTIONS 62
INTERNATIONAL ORGANIZATIONS 62
NATIONAL NON-PROFIT AND PRIVATE INSTITUTIONS 64
NON-PROFIT ORGANIZATIONS AND PRIVATE VOLUNTARY ORGANIZATIONS 64
PRIVATE BUSINESSES 66

ISSUES 66
LACK OF SOIL INFORMATION 66
LIMITS OF AGRICULTURE 66
ADVERSE ENVIRONMENTAL EFFECTS OF AGRICULTURE 67
ADVERSE ENVIRONMENTAL EFFECTS ON LIVESTOCK 67
USE OF FERTILIZERS, PESTICIDES, AND FARM MACHINERY 68
ANIMAL TRACTION AS AN AT ALTERNATIVE IN BOLIVIA 68
CROP DIVERSIFICATION AS AN AT ALTERNATIVE IN BOLIVIA 69

AGRICULTURE AT INVENTORY 70
CURRENT AT IN AGRICULTURE 70-78
DIFFUSING AT IN AGRICULTURE 79-80
ADAPTING AT IN AGRICULTURE 81-90
SUGGESTED AT IN AGRICULTURE FOR TRANSFER TO BOLIVIA 91-104

CHAPTER FOUR: RURAL SMALL SCALE INDUSTRY AND ARTISANRY: SECTOR OVERVIEW 105-121

BACKGROUND 105

INSTITUTIONS 107

ISSUES 108
HUMAN FACTORS 108
RURAL ARTISAN INCOME 108
PRODUCER COOPS AND ASSOCIATIONS 110
PRICING POLICIES AND STRUCTURES 111
ACCESS OF RAW MATERIALS 112
FINANCING 112

SMALL SCALE INDUSTRY AND ARTISANRY AT INVENTORY 114
CURRENT AT IN RURAL INDUSTRY 114-115
SUGGESTED AT IN SMALL SCALE INDUSTRY AND ARTISANRY FOR TRANSFER TO BOLIVIA 116

CHAPTER FIVE: RURAL WATER SUPPLY AND SANITATION: SECTOR OVERVIEW 122-158

BACKGROUND 122
RURAL WATER SUPPLY 122
SANITATION 123
INSTITUTIONS 123-125

ISSUES 125
TRAINING OF SANITARY ENGINEERS 125
CAMPESINO CUSTOMS 125

WATER AND SANITATION AT INVENTORY 127

CURRENT AT IN WATER AND SANITATION 127
SUGGESTED AT IN WATER AND SANITATION FOR TRANSFER TO BOLIVIA 139-158

CHAPTER SIX: ENERGY: SECTOR OVERVIEW 159-198

BACKGROUND 159

INSTITUTIONS 162

ISSUES 162

RENEWABLE ENERGY 162
SOLAR ENERGY POTENTIAL 162
WIND ENERGY POTENTIAL 169
ENERGY DEVELOPMENT ACTIVITIES IN THE RURAL SECTOR 178

ENERGY AT INVENTORY 179
CURRENT AT IN ENERGY 179-183
ADAPTING AT IN ENERGY 183-184
SUGGESTED AT IN ENERGY FOR TRANSFER TO BOLIVIA 190-198

CHAPTER SEVEN: INSTITUTION SECTION 199-361

GOVERNMENT OF BOLIVIA: MINISTERIAL LEVEL 200

MINISTERIO DE MINAS 200
DEPENDENCY SURVEYED: GEOBOL 200

MINISTERIO DE ASUNTOS CAMPESINOS Y AGROPECUARIAS (MACA) 202
DEPENDENCIES SURVEYED:
INSTITUTO BOLIVIANO DE TECNOLOGIA AGROPECUARIA (IBTA) 204
CENTRO DE INVESTIGACIONES DE AGRICULTURA TROPICAL (CIAT) 209
PATACAMAYA 211
SAN BENITO 213
TORALAPA 215
LA JOTA 217
BIBLIOTECA NACIONAL AGROPECUARIA 219
DIRECCION DEPARTMENTAL DE REIGO 220
SERVICIO NACIONAL DE DESARROLLO DE COMUNIDADES (SNDC) 223
PROYECTO CHAPARE/INSTITUTO NACIONAL
DE COLONIZACION/OAS 226
PROYECTO DE DESARROLLO RURAL INTEGRADO INGAVI 228

MINISTERIO DE INDUSTRIA, COMERCIO Y TOURISMO 232
DEPENDENCIES SURVEYED: 232
INBOPIA-INSTITUTO BOLIVIANO DE LA PEQUENA INDUSTRIA
Y ARTESANIAS 233
INFOL-INSTITUTO NACIONAL DE FOMENTO LANERO 236
ULLA ULLA DEVELOPMENT PROJECT 238
DIRECCION DE NORMAS Y TECNOLOGIA (DGNT) 241

MINISTERIO DE ENERGIA E HIDROCARBUROS 242
DEPENDENCIES SURVEYED: 242

DINE - DIRECCION NACIONAL DE ELECTRICIDAD 243
INER - INSTITUTO NACIONAL DE ELECTRICIDAD RURAL 244
ENDE - EMPRESA NACIONAL DE ELECTRICIDAD 246

DIRECCION NACIONAL DE METEOROLOGIA E HIDROLOGIA (DNMH) 248

MINISTERIO DE TRABAJO Y DESARROLLO LABORAL 249
DEPENDENCY SURVEYED: FOMO 250

MINISTERIO DE PREVISION SOCIAL Y SALUD PUBLICA 253
DEPENDENCIES SURVEYED: 253
DIVISION OF SANEAMIENTO AMBIENTAL 254
DSA-TARIJA/UNIDAD SANITARIA 256
DSA-CHUQUISACA/UNIDAD SANITARIA 257
DSA-COCHABAMBA/UNIDAD SANITARIA 258
DSA-SANTA CRUZ/UNIDAD SANITARIA 259

MINISTERIO DE BIENESTAR SOCIAL Y ASUNTOS DE MUJERES 260

MINISTERIO DE PLANEAMIENTO Y COORDINACION 261
DEPENDENCIES SURVEYED: 261

OFICINA DE CIENCIA Y TECNOLOGIA (OCT) 262
DIRECCION DE PLANEAMIENTO Y POLITICA SOCIAL GLOBAL (DISOG) 263
DESARROLLO DE COMUNIDAD INTEGRAL (DCI) 266

DEPARTMENTAL OR REGIONAL DEVELOPMENT CORPORATIONS (DDCs) 268

INSTITUTIONS SURVEYED 268

CORDECRUZ-CORPORACION REGIONAL DE DESARROLLO DE SANTA CRUZ 270
CORDEPO-CORPORACION DE DESARROLLO DE POTOSI 275
CORDECO-CORPORACION DE DESARROLLO DE COCHABAMBA 277
CORDECH-CORPORACION DE DESARROLLO DE CHUQUISACA 279
CODETAR-CORPORACION DE DESARROLLO DE TARIJA 281

PREFECT LEVEL INSTITUTIONS 283

INSTITUTIONS SURVEYED: DEPARTAMENTO DE MICRO-RIEGO, PREFECTURA DE COCHABAMBA 284

EDUCATIONAL INSTITUTIONS 286
EDUCATIONAL INSTITUTIONS SURVEYED: 286
UNIVERSIDAD MAYOR DE SAN ANDRES 287
INSTITUTO DE INVESTIGACIONES FISICAS 288
INSTITUTO DE INGENIERIA SANITARIA 290
LABORATORIO DE SISMOLOGIA SAN CALIXTO 292
INSTITUTO NACIONAL TECNOLOGICO PEDRO DOMINGO MURILLO 294
UNIVERSIDAD AUTONOMA GABRIEL RENE MORENO 295
INSTITUTO DE APENDIZAJE INDUSTRIAL 297
UNIVERSIDAD MAYOR DE SAN SIMON, FACULTAD DE AGRICULTURA 298
EXTENSION UNIVERSITARIA 300
CENTRO DE INVESTIGACION, FORMACION Y EXTENSION EN MECANIZACION AGRICOLA (CIFEMA) 301
INSTITUTO TECNOLOGICO TUPURAYA 303

BOLIVIAN PRIVATE NON-PROFIT ORGANIZATIONS 304

ACADEMIA NACIONAL DE CIENCIAS DE BOLIVIA (ANC) 305
EL CENTRO PARA EL DESARROLLO SOCIAL Y ECONOMICO (DESEC) 306

INTERNATIONAL ORGANIZATIONS 311

BOLIVIAN AFFILIATES OF INTERNATIONAL ORGANIZATIONS SURVEYED: 311
COMITE DE MUJERES INTERAMERICANA (CIM) 312
INSTITUTO INTERAMERICANO DE CIENCIAS AGRICOLA (IICA) 313
UNITED NATIONS LIBRARY 314
AMERICAN INSTITUTE FOR FREE LABOR DEVELOPMENT (AIFLD) 315
COMITE DE COORDINACION Y PROMOCION DE TECNOLOGIA APROPRIADA (COCOP) 316

BANCO AMERICANO 318
BANCO MUNDIAL 319
CARE 320
INTERNATIONAL VOLUNTARY SERVICE (IVS) 322
PLAN DE PADRINOS 324
PROYECTO AGROBIOLOGIA COCHABAMBA 326

NON-PROFIT AND PRIVATE INDUSTRY ORGANIZATIONS WITH RELIGIOUS AFFILIATIONS 328

INSTITUTIONS SURVEYED: 328
CARITAS 329
ACCION CULTURAL LOYOLA (ACLO) 331
CENTRO DE INVESTIGACION Y PROMOCION DEL CAMPESINADO (CIPCA) 333
COLONIA PIRAI 335
COMITE CENTRAL MENONITA (CCM) 336
MENNONITE ECONOMIC DEVELOPMENT ASSOCIATES, INC. (MEDA) 339
HEIFER PROJECT INTERNATIONAL/METHODIST EVANGELICAL MISSION AT SANTA CRUZ 340
FUNDACION INTEGRAL DE DESARROLLO (FIDES) 341
COMISION BOLIVIANA DE ACCION SOCIAL EVANGELICA (COMBASE) 343
CANADIAN BAPTIST MISSION 345
FUNDACION ECUMENICAL PARA EL DESARROLLO (FEPADE) 346
ASEC 347

COOPERATIVES AND COMMUNITIES 348

INSTITUTIONS SURVEYED: 348
LA KHOCHALITA 349
CRE-COOPERATIVA RURAL DE ELECTRIFICACION (SANTA CRUZ) 352
COOPERATIVA CRUCENA DE SERVICIOS CULTURALES 353
MENNONITE COLONIES 354
Q'ANTE COOPERATIVE (see IVS above)

PRIVATE BUSINESSES 356
INSTITUTIONS SURVEYED: 356
HANSA LTDA. 357
HILLER, S.A. 358
HIMESUR LTD. 359
METISA BOLIVIANA LTDA. 360
SOLBOL 361

REFERENCES CITED 362

LIST OF FIGURES

FIGURES

I-1 Log Frame for the Proposed Appropriate Technology Program in Bolivia

III-1 Traditional Highland Plow

III-2 Dutch Hoe

III-3 Harness Repair Bench

III-4 Wooden Beam Plow

III-5 Mennonite Peanut Sheller

III-6 Wheelbarrow Rice Thresher

III-7 Fertilizer Applicator for Potatoes

III-8 Pedal-type Rice Thresher

III-9 Animal Traction Tester

III-10 West African Harrows

III-11 CIFEMA Potato Harvester Plow

III-12 CIFEMA V-Shaped Ridge Plow

III-13 Scythe with Grain Cradle

III-14 Chusa

III-15 Scoop Shovel

III-16 Corn Pegs

III-17 Dual Function Jab Planter

III-18 Bolivian Hand Scraper

III-19 African Hand Leveling Device

III-20 Bicycle Carrying Rack

III-21 Steel-fingered Potato Harvester

III-22 Texas Inertia Nutmaker

III-23 Coffee Processing Machinery

III-24 Corn Sheller

FIGURES

IV-4 Filtered Water Storage Unit with Nested Pot Made on a Potter's Wheel (WWF)

IV-5 A and B: Filtered Water Storage Units Made with Traditional Coil Technique water Pots; C: Filtered Water Storage Unit with Nested Pots Made on a Potter's Wheel

V-1 Log T. Handle Detail of Mennonite Colony Shallow Well Drilling Technique

V-2 Mud Pump Detail of Mennonite Colony Shallow Well Drilling Technique

V-3 CCM Dropping Bit

V-4 CCM Clay Bit

V-5 CCM Bucket Auger

V-6 CCM Well Filter End

V-7 CCM Water Budket

V-8 Hand Water Pump

V- Well Driving Points

V-10 Well Drilling Methods

V-11 Malawi Type Pump and Well

V-12 Detail of Piston and Check Valve Malawi Type Pump

V-13 Indian Pour-Flush Toilet with Completely Displaced Pit

V-14 Schematic Diagram of Sewered Pour-Flush System

V-15 Galvanized Sheet Metal Water Seal Unit for the Pour-Flush Toilets Located Immediately Above the Pit

V-16 Water Seal Squatting Plate for Pour-Flush Toilets Located Immediately Above the Pit

V-17 Squatting Plate and Water Seal Unit Details for Indian Pour-Flush Toilet with Completely Displace Pit

V-18 Vietnam Double Vault Composting Toilet

V-19 Botswana Double Vault Composting Toilet with Removable Superstructure

V-20 Tanzania Double Vault Composting Toilet

V-22 Details of Tanzania Double Vault Composting Toilet

V-23 Farallones Exploded Isometric Compost Privy

V-24 Compost Privy Layout and Location

V-25 Composting Privy Materials and Construction Sequence

VI-1 Mean Global Radiation in Cal/Cm/Day and Mean Monthly Global Radiation at La Paz

VI-2 Graphs of Wind Power vs. Rainfall at Selected Locations in Bolivia

VI-3 Washing Machine

VI-4 Passive Solar Water Heater

VI-5 Biogas Digester

VI-6 IRRI Hand Operated Bellows Pump

VI-7 Solar Grain Dryer

VI-8 Hand-powered Grain Mill

VII-1 Table of Organization IBTA

VII-2 Table of Organization SNDC

VII-3 Table of Organization Ingavi Rural Development Project

VII-4 Table of Organization DISOG

VII-5 Table of Organization CONEPLAN

VII-6 Table of Organization CORDECRUZ

VII-7 Table of Organization DESEC

VII-8 Table of Organization FIDES

LIST OF TABLES

III-1 Overall Land Use or Surface Cover for Bolivia

III-2 Cultivated Land by Department

III-3 Summary of Bolivian Soil Resources

III-4 Bolivia - Soils Areas According to Suitability in Humid Tropical Zone

VI-1 Profile of Electrical Generation in Bolivia for 1978

VI-2 Hours of Sun per Month in 1974, 1975 and 1976 from Six Locations in Bolivia

VI-3 Bolivian Weather Stations Which Recorded Daily Cloud Cover in 1975

VI-4 Wind Velocity Data from Selected Stations in Bolivia

VI-5 Bolivian Wind Stations and Data (United States Military N-Summaries)

VI-6 Bolivian Wind Recording Stations and Data in 1975

VII-1 IBTA-CIAT Agriculture Experiment Stations

LIST OF MAPS

III-1 Bolivia - Average Annual Rainfall

VI-1 Mean Radiation in South America for June and December

VI-2 Mean Solar Radiation in Bolivia for December, March and June

VI-3 Isovents of Mean Annual Wind Velocities in Bolivia

VI-4 Mean Wind Power Potential (W/M) in Bolivia

VI-5 Wind Power by Wind Direction in Bolivia

ACKNOWLEDGMENTS

A number of people participated in developing this final report.

The contributions of the following individuals are sincerely appreciated:

VITA Consultants who performed the survey of Appropriate Technology in Bolivia and authored the draft reports:

Wayne W. Frost	Team Leader, Small Scale Industry and Artisanry Expert
Dr. Harvey P. Newton	Agriculture
Max L. Kroschel	Water and Sanitation
Steve Blake	Energy

VITA Staff personnel who provided administrative back-up:

Steven Hirsh
Rosalinda G. Yangas
George Codrea
Cynthia Conti
Bonnie L. Ricci
Bernard V. Dvoskin
Elizabeth White

VITA Volunteers who participated as panelists:

Pre-fieldwork Phase	Post-fieldwork Phase
David Goff	David Goff
Michael P. Greene	Allan Griff
Mario Kamanetzky	Richard Fera
Theodore Sumberg	George Kaplan
Jay Howenstine	Tim Journey
Richard Fera	David Hess
Arthur K. Burditt	Thomas Fricke
Allen E. Abrahams	Leslie A. Brownrigg
John R. Hansen	Steven A. Romanoff
	George Codrea
	Steven Hirsch
	Rosalinda Yangas

VITA Volunteer Panelists who could not attend the meetings but who telephoned comments or reviews of the draft reports:

Michael P. Greene

Theodore Sumberg

Kenneth Cole

VITA Volunteers who prepared the original line drawings:

Wayne W. Frost
George R. Clark
Max Kroschel

VITA Editorial and Production Staff for the Final Report:

Rosalinda Yangas
Leslie A. Brownrigg
Kristine Ament
David Hess
Wayne W. Frost
Brenda W. Avery

USAID/La Paz Officers who provided comments on the draft report:

J. Peter Bittner
Kevin Kelly
Engineering and Energy Division Officer
Rural Development Division, Officer
Health and Humanitarian Assistance Division Officer

USAID/Washington, D.C. who provided pre-fieldwork orientation to the team:

Richard P. Burke
John S. Balis

In particular we appreciate the cooperation of the many individuals who provided information in Bolivia. Many of these individuals are acknowledged as contacts in Chapter Seven: Institution Section.

PREFACE

In the fall of 1979, VITA fielded a team of four experts in Appropriate Technology to Bolivia. Team Leader and Small Scale Industry and Artisanry Consultant Wayne Frost visted USAID and Bolivian Government offices in La Paz between September 4th and 16th. He returned to brief the other AT consultants on the team: Dr. Harvey Newton, Agriculture; Max Kroschel, Water and Sanitation; and Steve Blake, Energy. At VITA headquarters in Mt. Rainier, Maryland, the Bolivia AT team discussed a survey instrument which had been prepared by a panel of VITA volunteers to collect information concerning Bolivian institutions. Background information on Bolivia was also provided by the VITA Documentation Center.

The VITA Bolivia AT team then spent six weeks, between September 25th and November 13th, conducting interviews and making field site visits in Bolivia. Each expert surveyed the Bolivian institutions which have current AT activities or a potential to undertake AT activities in his sector. Each expert also surveyed and described particular Appropriate Technologies in Bolivia and made suggestions concerning AT which could be transferred to Bolivia to solve problems faced there.

The team had planned to conduct a ten week field survey. These plans were interrupted by political turmoil in early November. Cutting short their fieldwork in Bolivia, the team reassembled in Lima, Peru. Between November 14th and December 1st each consultant prepared a draft sectoral report. The interruption in the fieldwork plan led to the inadvertant omission of certain institutions scheduled for interviews in the latter weeks of fieldwork. Neither the draft reports nor this final report surveys all the institutions in Bolivia working in the AT field; rather, the institutions surveyed represent a sample among several types of institutions in Bolivia.

The four draft sectoral reports in Agriculture, Small Scale Industry and Artisanry, Water and Sanitation, and Energy were submitted in December 1979, to USAID/La Paz for comment. During January 1980 copies of these reports were circulated among VITA volunteers for comments. In late January 1980, panels of VITA volunteers and staff met to discuss each report.

The present final report responds to the USAID/La Paz comments, collates and reorganizes the information presenting the four sectoral draft reports and integrates the suggestions for revisions which arose in the comments and panel meetings of VITA volunteers.

Sectoral overview and AT Inventories are presented in sector-specific chapters: Three (Agriculture), Four (Small Scale Industry and Artisanry), Five (Water and Sanitation) and Six (Energy). All institutions surveyed are grouped together in an Institutions Section, Chapter Seven.

The analytical model used to reorganize the information is presented in Chapter One: The VITA MODEL OF AT TRANSFER/ADAPTATION/DIFFUSION/ACCEPTANCE PROCESS. This model is also referred to as the "AT Process."

A brief summary of the major findings of the VITA AT BOLIVIA SURVEY are presented in Chapter One. RECOMMENDATIONS for a Program in Appropriate Technology including the placement of five AT advisors in a Bolivian institution, the founding and managing of a SMALL PROJECTS FUND, the establishment

of an AT DOCUMENTATION CENTER and several sectoral specific pilot projects are described in the recommendations of Chapter Two.

CHAPTER ONE: RESULTS

THE VITA MODEL OF AT TRANSFER/ADAPTATION/DIFFUSION/ ACCEPTANCE PROCESS

VITA has developed a model for the TRANSFER, ADAPTATION, DIFFUSION and ACCEPTANCE of Appropriate Technology ("AT") based on its worldwide experience and a recent analysis of the AT PROCESS in forty countries.

In the VITA model, the process is set in motion by a recognition of need, followed by an expression of need and a request for assistance from potential beneficiary end-users. Between the request for assistance and the preparation of a response, other steps may be necessary: a needs assessment or a clarification of the request. The response, once formulated, begins a process which can be defined in four broad stages:

TRANSFER: Technology transfer is the movement of technical information, equipment, prototypes, plans, blueprints, how-to-do it manuals etc. from a place where a technology is known to a place where that technology may solve an identified problem. Transfer introduces the concept of the technology. Technological transfer can be accomplished with publications, information systems and AT training programs, in pilot projects set up to test designs in local situations or by providing consultants for on-site help. In general, technology transfer is either accomplished via media, especially print media; or on-site and in person, through training, one-on-one consultants' explanations and hands-on demonstration of the technology.

ADAPTATION: Any AT item, however successful in one particular situation, must be adapted to local conditions. The AT item must fit the physical environment, be compatible with the technological environment including the skill levels of the end-users, be appropriate in particular local economic terms and in a particular sociocultural setting. The process of adapting a design, plan or prototype may require modifications based on new information from the environment or derived from interaction with the end-users. Adaptation is essentially a "research and demonstration" stage, which may involve a strong component of training both potential manufacturers, and demonstrator/extensionists or end-users. The adaptation process needs to be documented in order to feed back the experience for further design modifications and for the process of adaptation of other AT prototypes in the same environment.

DIFFUSION: Diffusion requires on-site work in the communities and small businesses that the technologies are designed to assist. The stage implies a set of subprocesses which lead to the widespread acceptance and use of the technologies. Priorities among these processes differ in each case, but among the more important are training, production, maintenance, marketing and promotion, legal approvals, financing, and identification of channels to reach end-users. The training of intermediaries to diffuse the technology, such as rural extension workers, as well as the training of end-users, falls into this stage. Another important component is the establishment of production systems which are appropriate to the level of demand for the technologies, the support of the producers and supply of necessary raw materials, and a price structure which will assure access to end-users. Systems to maintain the technologies need to be established. All of these processes may also require special efforts in the other areas listed: marketing and promotion, legal approvals, etc.

ACCEPTANCE AND IMPLEMENTATION: Widespread acceptance and use of the new technologies by a maximum number of the potential end-users is the goal stage of the process. In many cases, initial acceptance and implementation or use is localized among a minority of the potential end-users. Additional efforts in the processes of the Transfer, Adaptation or Diffusion Stages may be required to enlarge acceptance.

Appropriate Technology is not a predefined class of material devices. In order for a technology to be appropriate, it must meet a recognized need. Before the matching of AT solutions to particular problems can begin, the need must be expressed and a very specific request for assistance must be voiced. Imposing solutions to meet unperceived needs represents "top down" technocratic development, not Appropriate Development. As VITA stated in its proposal for the Bolivia AT survey,

> "Appropriate development consists of change occurring as a result of needs and actions generated from within a group, village, or society and facilitated by the philosophy and concepts underlining what has come to be known as appropriate technology. It is meaningful, lasting development made possible through the use of technologies which both fit local contexts and spur further change.
>
> Appropriate or intermediate technologies can, given the context, encompass a wider range of specific tecnnical options. In general, however, such technologies tend to share a number of common features when applied to developing countries. They:
>
> - Are developed out of the interaction of the various groups and individuals which make up the community in which the technologies are to be introduced;
> - Promote job creation and meaningful work through the design and introduction of labor-intensive equipment and approaches, expecially those involving decentralized, small-scale production units;
> - Can be operated and maintained within the given community;
> - Emphasize self-reliance through maximizing the use of local resources, materials, and expertise, and through the selective importation of foreign technologies which have proven appropriate;
> - Can be afforded by the individuals, groups, businesses, or countries for which they are intended;
> - Take into account all factors related to increased productivity before beginning a production enterprise;
> - Are based upon local environments and ecological systems with minimal adverse impact on these systems; and
> - Encourage community members to recognize and expand their own abilities, knowledge, and skills in meeting their own needs.

Based on the above, therefore, it seems that Appropriate Technology, facilitated wisely and well by the Government of Bolivia, does indeed have the potential to be used by the country to:

1. Serve as a delivery mechanism by which the resources of government and the larger-scale program efforts and resources of universities and institutions and organizations can be brought to bear most immediately and with greatest potential for impact on the problems of rural poor people;

2. Promote self-reliance and improve standard of living through access to and implementation of technologies advanced enough to lead to increased productivity, yet appropriate enough to be transferred effectively;

3. And, growing from the previous two, foster the growth and development of local infrastructure which will enable continuing and more meaningful interface between the realities of government and the problems of the people."

THE VITA AT BOLIVIA SURVEY

Roughly one hundred institutions were surveyed, including agencies, programs, departments and autonomous project and special purpose institutions within Bolivian ministries; department development corporations; educational institutions; national non-profit organizations; affiliates of international organizations operating in Bolivia; religiously affiliated social action and extension services; cooperatives and producers' associations and private businesses. An Institutional Summary, a description of the Special Programs and/or AT Initiative shown and Comments are given for each institution in the reports found in the Institutions Section (below). An overview was prepared for each of the four sectors which gives the relevant institutions involved in the sector, designates important issues facing the sector and provides an inventory of Appropriate Technology for the sector. The sectoral Inventories of Appropriate Technology describe each item in technical terms and locates the technology by stage in the VITA process model of AT TRANSFER, ADAPTATION, DIFFUSION or ACCEPTANCE.

In analyzing the AT inventory of Bolivia in terms of this process model of stages, AT was found to be concentrated in the stages of ADAPTATION, or very initial or highly localized ACCEPTANCE/IMPLEMENTATION. The process of TRANSFER was revealed to be weak, without established mechanisms or specialized institutions able to meet requests for assistance with technical information.

The stage of DIFFUSION was also weakly developed. Though a great variety of Bolivian governmental, PVO, private non-profit, educational or social action organizations had some type of extension service interacting with local rural campesino communities, few of these extensionist, intermediary organizations were linked to institutions working in the stage of ADAPTATION in the design, research, development, testing etc., of Appropriate Technologies.

The concentration of AT in Bolivia at the ADAPTATION stage, particularly in institutions chartered as research or educational entities, was particularly noteworthy. This type of AT could be characterized as "solutions in search of a problem or market". Researchers, including government employed technicians and students, were found to be developing AT as part of their institution's agenda, perhaps responding

to their own analysis of what Bolivian campesinos need, but not responding to definite expressions of need by potential end-users among the campesinos. Presumably, after suitable research and development and field trials, the AT in this ADAPTATION stage would be taught to or imposed upon potential end-users, though mechanisms for such diffusion were not necessarily identified by the research institutions.

In the course of the survey, very few institutions were discovered which were responding to direct requests for assistance from Bolivian campesinos. The "trigger mechanism" for the VITA processual model is expression of need and a request for assistance by potential end users. In the case of AT, the intended beneficiary population is among Bolivian campesinos, yet mechanisms and channels through which Bolivian campesinos could direct their own expressions of need were virtually absent from the AT process in Bolivia. Appropriate Technologies were being developed by technical specialists, including foreigners and academics, whose perceptions of Bolivia's problems and, thus, Bolivia's needs emerged from sources other than a dialogue with Bolivian campesinos.

Few extensionist organizations which were in a position to hear expressions of need and, possibly, to receive and relay request for assistance from Bolivian campesinos, were connected institutionally or informally to any institution where a request for AT assistance could be referred for response. Conversely, those organizations most actively involved in the ADAPTATION stage of research, development and demonstration/field trials were not interacting with Bolivian campesinos in such a manner that they were able (or willing) to receive requests for assistance. One research station for example, theoretically dedicated to solving problems faced by small farmers, held only a one-day "open house" at its research facility a year and otherwise interacted with local campesinos only to collect survey data on long, preprogrammed questionnaires.

There were noteworthy exceptions. The small private voluntary organization, Comité Central Menonita, was actively training campesinos at its demonstration farm, building prototypes of wells for volunteers' use in the rural communities where they live, and was working and responding to campesinos' requests for the construction of such wells or for equipment demonstrated in their animal traction program. CIFEMA (Center for Research, Training and Extension in Agricultural Mechanization), a dependency of the Cochabamba San Simón Faculty of Agriculture (see Institution Section) was very actively involved in special training programs. Several of the IBTA (Bolivian Institute of Agricultural Technology--see Institution Section) experiment stations were found to feed back the results of agricultural research very rapidly to local campesinos in training and outreach programs in their localities. In general however, the integration of an institutional capability to adapt AT to the Bolivian environment and to diffuse the AT developed through TRANSFER stimulated by campesinos' requests for assistance was rare.

Information about new ideas and concepts was judged to be adequate by the VITA survey team. Even AT now presently localized somewhere in Bolivia was not known beyond the narrow network of a particular local group or institution. The team of VITA consultants was inspired to suggest a variety of new technologies and devices not known in Bolivia which might better solve the same problems which the institutions they surveyed were confronting.

Coordination of the efforts of extensionists and researchers, each somewhat specialized in carrying out a particular stage of the AT process, was lacking. Collaboration between different institutions working on the same or similar AT solutions was

also extremely rare. In some cases, knowledge that another institution was working in the same technical area or with the same local population spurred rivalries and denunciations, rather than the chartering of joint collaborative efforts.

The relative absence of coordination, collaboration and even communication among the variety of institutions in Bolivia working in the AT field or which have a potential role to play in some stage of the AT process can be cited as the most important problem to address. The VITA survey discovered that a great variety of institutions are currently involved in some part of the AT process; details are given in the Institution Section. AT does exist in Bolivia, but AT endeavors are dispersed, often ad-hoc, poorly institutionalized in terms of mechanisms or personnel, unrelated in most cases to the programmatic development aims of the institution. Given the status of AT efforts within institutions, the lack of coordination among institutions is not surprising.

The lack of information about AT and of mechanisms and channels where requests for assistance could be referred for response are related problems A strategy for developing such mechanisms and channels lies in part in the coordination of AT efforts, so that institutions working in Bolivia will become aware of each other's capabilities, AT solutions and contracts; so the individuals and institutions working in AT in Bolivia can form a network which will facilitate the exchange of information and experience and enter the global network of AT workers. Beyond this, the need was identified for a distinct centralized repository of information—an AT Documentation Center--which could function to TRANSFER technologies upon request.

The lack of a systematic, programmed approach to integrating AT into rural Bolivian development projects was another problem area identified by the VITA team. The strategy to address this problem is to begin a programmatic initiative in each of the four sectoral areas which is based on the current levels of institutional and technological development of AT in Bolivia and casts a sequence of priorities for activities in terms of a process model of AT in development.

In contrast to these areas of weakness, the AT process in Bolivia displayed a great strength in its variety. The AT Inventories presented in the Overviews of the four sectors (below, in Chapters Three, Four, Five and Six)give some idea of the creative applications of AT principles ranging from traditional practices to adaptations of highly sophisticated devices originally developed in other countries. The strength of the AT process in Bolivia is all the more remarkable because, with the exception of a few isolated institutions largely supported by foreign funds (i.e. CIFEMA, the Ulla Ulla Project, CIAT(Center for the Study of Tropical Agriculture), FOMO(National Services for Labor Training) in Santa Cruz, the DESEC (Center for Social and Economic Development) group - see Institution Section) the AT process operates on a "shoestring ". AT workers in Bolivia are highly committed individuals, overcoming the situations of resource scarcity they face. In many cases, only a small amount of funding would serve to push forward the AT process from a particular stage into a more advanced stage. For example, an institution would require only a few hundred dollars to construct and test a new prototype or to print and distribute a "how-to-do-it" booklet in a native language.

The strategy to address this problem clearly recommended by the VITA Bolivia AT consultants and approved by the VITA panelists and staff is to create a SMALL PROJECTS FUND. Because the amounts required are very small, it will be first necessary to establish a merit review and administrative process in order to dispense funds and to manage a variety of small projects. The assumption of this strategy is

that if funds were available for this purpose, a great number of institutions in Bolivia would be interested in applying for such grants and contracts By assuring a merit review, and by opening the competition for grants and contracts to a wide number of types of offerers, the SMALL PROJECTS FUND would be able to stimulate the existing strength of the AT process in Bolivia.

CHAPTER TWO: RECOMMENDATIONS

The recommendations which follow propose a program in Appropriate Technology for Bolivia which represents a coherent strategy to address the problems identified.

The lack of coordination is the most important current bottleneck in the AT process in Bolivia. Accordingly, the thrust of the recommendation is to develop the institutional capacity of the single Bolivian institution which is formally chartered to coordinate development activities in Bolivia: the Ministry of Planning and Coordination. This ministry is charged with coordinating the plans and activities among the national government ministries, between the national government and the department development corporations, and among the non-governmental organizations, business, foreign institutions and private non-profit organizations working in Bolivia. While this Ministry is charged with this task, its authority is not supported by adequate resources--trained personnel and discretionary budget funds.

OFICINA DE CIENCIA Y TECNOLOGIA (OCT - Office of Science and Technology)
Within the Ministry of Planning and Coordination is an Office of Science and Technology. In terms of formal authority, the OCT is the most likely candidate among government institutions to coordinate a programmatic initiative to integrate Appropriate Technology in Bolivian rural development. At the time of the VITA survey, OCT had a six-person staff. Just after the survey, its capable director was appointed Scientific Advisor to the Andean regional economic group. The OCT does not have at present sufficient staff or resources to carry out such a program. The strategy VITA recommends, therefore, is to provide OCT with this institutional capacity by supporting the appointment and on-the-job training of additional staff in the OCT, including an administrator, technical specialists in the four sectoral areas and support personnel including secretaries, translators, a draftsperson and documentation clerks. During a four year program, advisors would be provided to work as counterparts to establish with the Office of Science and Technology a coherent program to coordinate the process of Appropriate Technology Transfer, Adaptation , Diffusion and Acceptance.

VITA recommends that one long term advisor work with a Bolivian counterpart as the administrator of the program during a four year period and four additional expatriate technical advisors each work for a period of two years with Bolivian technical specialist counterparts in the sectors of Agriculture, Water and Sanitation, Rural Small Scale Industry and Artisanry, and Energy. Working together, the Bolivian counterparts and staff and the advisors will lay the ground work for a long term program in Appropriate Technology in Bolivia.

During the intitial four year period, the advisors and OCT counterparts will accomplish the following:

- Establish a Documentation Center for Appropriate Technology
- Administer Small Projects Fund Grants and Contracts
- Act as technical advisors to various institutions in Bolivia which are interested in integrating Appropriate Technology into implementation of their projects directed to Bolivian campesinos

- Develop connections and networks among the various institutions inside Bolivia, in the Andean region and throughout the world which are concerned with Appropriate Technology

- Act as Information Desk Officers in conjunction with a Documentation Center for Appropriate Technology to meet requests for AT related data from institutions working in Bolivia

- Facilitate access to funding institutions for Bolivian organizations seeking to develop Appropriate Technologies

- Develop a bank of AT consultants and access consultants services upon request

- Manage and administer a set of four distinct sectoral programs, with a series of pilot subprojects including relevant Data Collection programs, feasibility studies and implementation projects.

The Appropriate Technology Documentation Center, the Small Projects Fund Grants and Contracts Program, the Sectoral AT Programs and the scope of work of each advisor and counterpart are described in greater detail in the next section.

Alternative institutions to OCT and alternative sources of counterparts are also described. A Log Frame for the proposed project can be found at the end of this recommendations chapter.

AT DOCUMENTATION CENTER

Background

The need for an AT Documentation Center in Bolivia is recognized by the Bolivians themselves; several institutions are currently proposing to develop AT Documentation Centers. These plans include:

- AT in Agriculture Documentation Center at Cochabamba, to be funded by the Fundación Simon Patiño and the Swiss Foundation Pro-Bolivia through its affiliate, the Proyecto Agrobiológica Cochabamba (see Institution Section, Bolivian Affiliates of International Organizations); the alternative locations proposed to house such a collection are the Centro Pedagógico Portales, CIFEMA or the Faculty of Agriculture at San Simón University.

- COCOP has future plans to begin an AT Documentation Center.

- The International Voluntary Organization (see Institution Section, Bolivian Affiliates of International Organizations) has expressed interest in its volunteers helping establish an AT Documentation Center.

- A related program is the ongoing transfer from the National Technical Information Service of the United States Department of Commerce to the Dirección General de Normas y Tecnología (DNGT- see Institution Section: GOB Ministerial Level). DNGT is housed in the Ministry of Industry, Commerce and Tourism. The transfer of NTIS materials on microfiche or microfilm is subsidized by AID/Washington. Necessary technology (the microfiche reader and a hard copy printer) to make the distributorship functional has not yet been installed.

- The United Nations Library in La Paz already contains resources related to AT, though no specific AT focus.

Location

The effort to establish a centralized AT DOCUMENTATION CENTER in Bolivia will be integrated into these existing programs. The United Nations Library is recommended as the parent library because it is well established, funded and maintained. Consideration should be given to deposit a duplicate set of AT information in the area of agriculture to an ADC in Cochabamba, should an AT Documentation Center be established there during the course of the program.

The AT Program Administrator and the AT sectoral Advisors will have as one of their principal activities the transfer of relevant AT Documentation. They will encourage Bolivians involved in AT activities to document their experience and deposit with the central AT Documentation Center. They will be responsible for the transfer of AT documentation relevant in their field and to the specific programmatic initiatives described below for each sector.

In order to facilitate their performance of this function, it is recommended that prior to leaving for Bolivia each advisor receive training at the VITA AT Documentation Center in Subject Classification and Technical Service Activities needed to complete AT information transfer. The VITA AT Documentation Center has one of the largest collections of AT information and has the necessary resources for this type of training. Eleven international organizations have participated in AT Information Systems Training at VITA since 1978.

Collection of relevant AT Documents in Spanish can draw from such sources as:

- VOLUNTEERS IN TECHNICAL ASSISTANCE (VITA)

- CENTRO MESOAMERICANO PARA ESTUDIOS DE TECNOLOGÍA APROPRIADA (CEMAT-Mesoamerican Center for Studies of Appropriate Technology) in Guatemala

- CENTRO DE ESTUDIOS ECONOMICOS Y SOCIALES DEL TERCER MUNDO (CEESTEM-Center for Third World Economic and Social Studies) in Mexico

- CENTRO DE DESARROLLO INDUSTRIAL (CDI-Center for Industrial Development) in Honduras
- COMISIÓN COORDINADORA DE TECNOLOGÍA ADECUADA (CCTA-Coordination Commission for Appropriate Technology) in Peru.

Once a determination has been made that relevant materials do not exist in the Spanish language, AT documents in other languages can be obtained and translated to access this information to the first tier of beneficiaries: literate Bolivians. A part-time translator and part-time draftsperson will be hired in Bolivia to work under the direction of the AT Program Administrator to access new materials into the Spanish language.

Index and Catalogue

The VITA classification system has been developed over the past twenty years to access easily AT documents in order to answer inquiries.

The AT documents could also be classified in whatever classification system is used by the parent library, expanding that system to include the specialized AT materials. In the case of the United Nations Library in Bolivia, part of this effort should be directed at identifying sources of AT Documentation already housed there under different categories.

A card file with subject cards for each document (in each language) is the basic tool for accessing AT information. Once this indexing is completed, the AT Documentation Center could begin to function as a resource center.

The long term goal will be to make the AT Documentation Center capable of responding to requests not only from technicians, but from Bolivian campesinos themselves. As a step in achieving this goal, during the AT Program, certain AT Documents will be given priority for popular publication. SMALL PROJECTS FUND contracts could support the development of popular publications--in Aymara, Quechua and other Bolivian languages as well as Spanish--for the AT Documents which have the highest priority in terms of the sectoral programmatic initiatives. The SMALL PROJECTS FUND grants program would support the development of such popular presentations and publications based on any AT documents collected at the center and the write-up of AT Bolivian experiences, designs, blue prints etc. , for deposit.

Once the AT documents are gathered, catalogued and available in suitable format, the Appropriate Technology for responding to inquiries in Bolivia may well be to print or mimeograph a limited set of the documents in highest demand. Whereas the VITA Documentation Center is able to respond to requests for documentation utilizing photocopy machines, the expense of photocopying in Bolivia is prohibitive (US$.25 per page!). In some lesser developed countries, AT Documentation Specialists respond to requests by hand copying the printed or photocopied documents on deposit. In Bolivia, the numerous businesses have old fashioned printing presses provide an intermediate technological alternative.

A documentation clerk working with an expatriate librarian voluntary assistant or trained by an AT Documentation Center specialist will catalogue the materials prepared for broader response to inquiry. Continuation of the program will depend on its sponsorship by a Bolivian or international funding source.

SMALL PROJECTS FUND: FEATURES AND CRITERIA

The Small Projects Fund follows the model of the United States Department of Energy Small Grants Program for Appropriate Technology in Energy, the United States National Science Foundation Grant Program for Scientific Research and Development of Appropriate Technologies, and the VITA Energy Project funding criteria. The Program recommended for Bolivia would have the following features:

- Formal Solicitation of Grant Applications
- Requests for Proposals
- Broad distribution of the solicitations through newspaper announcements and mailings to potential respondents
- Initial review of applications by sectoral specialist advisors and the staff of the counterpart OCT AT Program
- Circulation of applications to experts to elicit their comments and recommendation for funding
- Final selection of awards in a Merit Review by a panel of experts appointed from official international organizations in Bolivia, Bolivian academics and experts appointed by relevant Bolivian ministries
- Awards paid in quarterly advances
- Quarterly progress reports
- Final payment upon receipt of a final report
- Renewal of grants and contracts upon justification and successful completion of the first endeavor proposed
- Grant levels of US$500 to $5,000 without restriction to individuals, businesses, government agencies, private voluntary organizations, religiously affiliated organizations and non-profit institutions
- Grant levels of US$5,000 to $20,000 to support the collaborative effort of two or more institutions except institutions with overlapping staff or directors or institutions which are dependencies of the same parent organization, and restriction of the funding of person years of effort to $5,000 per year.

All Projects proposed must have clearly stated goals which can be and are expected to be achieved within a specified time period. These goals should be responsive to locally felt needs and able to be understood, accepted and implemented with a minimum of outside assistance.

Certain criteria will be raised regarding the offerers or initiators who apply for support from the Small Projects Fund:

- Offerers (as institutions, individuals or businesses) must have been working in the AT field for at least one year prior to proposing; the project staff must include at least as many citizens of Bolivia as foreign residents.

- Offerers must demonstrate that the project meets an expressed need of some portion of the Bolivian campesino population; the expression of the need, the scope of the problem and the potential supportive acceptance of the project by the intended benificiary population must be documented.

- The offerer must document a financial or in-kind commitment which is commensurate with the scope of the project and the amount of the request; one form of documentation would be prior commitment of funds and/or personnel for the same or similar project. For example, an institution might supply records documenting that it developed, produced and distributed a "how-to-do-it" pamphlet or newsletter entirely at its own expense in the past.

- The offerer must have the capacity to keep records and accounts or include in the application a request for funds to have such records kept by a person responsible to the offerer so as to be able to show where, how and for what purpose project funds were disbursed, as a component of the quarterly and final reports.

- The project proposed must be compatible with the national development plan and the Appropriate Technology Program as well as with Bolivia's social, cultural and educational policies.

- For the lower levels of funding (US $500-$5,000) individuals, church groups and businesses as well as government agencies and other formal institutions will be considered.

- For the higher levels of funding, only formally organized institutions recognized under Bolivian law or forming part of the Bolivian Government, regional or municipal governments will qualify.

There will be two types of funding available from the SMALL PROJECTS FUND: grants and contracts. The criteria listed above will apply to offerers under both the grant program and the contract program. Under the grant program, the scope of work of a proposal will originate from the applicant. Under the contract program, the scope of work will be written by the sectoral AT Advisors and their Bolivian counterparts. Much of the work described below under the PROGRAMMATIC AT INITIATIVES for Agriculture, Water and Sanitation and Energy will be supported by the Contract Program.

SMALL PROJECTS FUND GRANT PROGRAM

Although offerers will propose a scope of work, the announcement for the SMALL PROJECTS FUND GRANT PROGRAM will outline the general areas and types of endeavors to be supported by the program. Some of these should include:

Concept Development

Awards of lower levels of funding (US $500-$5,000) will be made for the development of an idea, concept or investigative finding which may be applied to the design of a particular appropriate technology, of an end-users' training program or of a method to promote and disseminate AT among Bolivian campesinos.

Research and Development

Research and development projects will normally be limited to the applied research necessary to adapt a particular technology to the Bolivian environment, or to produce prototypes, or to acquire the knowledge necessary as a component of production, dissemination or training. The effort of which it is a part must itself meet other criteria and the information should not be available elsewhere. Support will be available for the experimental construction or manufacture of prototypes with Bolivian raw materials, restricting the component of imported materials to 20% of the total value of the raw materials when existing plans, blue prints or earlier generations of the device have been developed by the initiator. Awards will be made to test a newly developed or newly adapted technology under operating conditions to demonstrate that its application is technically, economically and environmentally feasible; that the appropriate technology is acceptable to Bolivian campesinos and meets a definite need of this beneficiary population.

Production and Market Studies

Projects may be proposed by private entrepreneurs attempting to produce and to market appropriate technologies for the consumer market. Normally, these would be limited to market surveys, the refining of the production processes or product design and the purchase of necessary capital equipment. The prospects for commercial success should be high and the potential multiplier effect should be apparent. Priority will be given to organizations with the capacity to develop into commercially viable enterprises and to projects that create jobs, generate income, in cash or kind, or substantially reduce the cost of an item to the comsumer or which can be self-sustaining. Private entrepreneurs will be required to demonstrate that conventional bank loans are not available for the project proposed; in some cases, private entrepreneurs can apply to the Small Project Fund for the technical assistance required to prepare successful loan applications for AT production and marketing related projects.

Diffusion Techniques

Innovative ways of promoting AT among Bolivian campesinos will be supported through pilot projects in single communities, through special training programs for end-users, radio broadcasts, slide shows and the preparation, printing and distribution of popular "how-to-do-it" manuals in Spanish, Quechua, Aymara or other native Bolivian languages. The Fund will promote use of pilot projects to diffuse a new appropriate technology into a specific rural campesino community and to study the process and any impediments to acceptance on the part of the beneficiary population.

The transfer of AT to technicians and extensionists elsewhere in Bolivia will be supported, expecially the preparation, printing and distribution of newsletters or circulars outlining an appropriate technology and conferences and workshops which bring together AT workers from several different locations and institutions in Bolivia.

SMALL PROJECTS FUND CONTRACT PROGRAM

Requests for Proposals in the SMALL PROJECTS FUND CONTRACT PROGRAM will include more specific information. In contrast to grants, where the proposers/offerers/initiators will propose a scope of work, under the Contract Program of the same fund, the scope of work will be developed and specified by the Appropriate Technology Program officers: the advisors and their counterparts. A contract may be offered, for example, to build a particular model, the exact plans and materials specification for which will be included in the request for proposals. Several such projects are described in the sector programs.

AGRICULTURE: A PROGRAMMATIC AT INITIATIVE

Problem: AT in Agriculture is locked in the ADAPTATION stage in localized institutions. Mechanisms for TRANSFER of current AT--already accepted or adapted somewhere in Bolivia--and of new AT are weak. DIFFUSION of adapted AT is also weak.

Strategy: The Programmatic AT Initiative in Agriculture will catalyze and systematize communications, coordination among the agents and institutions of AT in Agriculture, and the TRANSFER and DIFFUSION of AT to Bolivian campesinos.

Of the four sectors surveyed, Agriculture has the most complex insititutional structure. Chapter Three, the overview of the sector, reviews the institutions involved and reports on more than forty institutions primarily concerned with agriculture. Within the Ministry of Campesino Affairs and Agriculture alone are dozens of agencies--some autonomous--with overlapping functions. Any collaboration among the diversity of institutions poses special problems for coordination and communications. A good deal of Appropriate Technology has been generated by these Bolivian institutions, but communication of the discoveries, adaptations, field trial results, training methods, etc. is weak.

The primary function of the Advisor in AT for Agriculture and the Bolivian counterpart will be as a catalyst for innovative and community based efforts to intensify agriculture with Appropriate Technologies, to promote agroforestry, gardening horticulture, aquaculture and the use of currently noncultivated species, to plan and implement integrated pest management and to apply renewable resource energy to agriculture. These advisors must work closely with governmental, educational and private voluntary organizations to accomplish the networking which is sorely required.

Because the experience of institutions working in agriculture has produced a large volume of approaches, adaptations, field tests, pilot studies and demonstration projects, the contribution of the advisors to collecting this information in a central AT DOCUMENTATION CENTER and then of disseminating the existing information through workshops, conferences, newsletters, and special publications would occupy nearly a fulltime effort. However, like the other special advisors, the Agriculture AT desk officers must have special set-asides in the SMALL PROJECTS FUND to promote innovations and improvements in the process of developing a general acceptance of AT in Bolivian agriculture.

Some of the areas to be set aside for grants and/or contracts in agriculture drawn from the SMALL PROJECTS FUND include:

- Construction of prototype AT implements and machinery
- Conduct of field trials with AT implements and machinery
- Adaptation of AT implements and machinery to local conditions constructed with local materials
- Assistance to local shops and craftspersons to build implements and machinery already found useful and acceptable by campesinos

- Conduct of training courses for:

  AT extension agents

  Extension agents in general

  Students studying for agricultural engineering degrees ("Ing. Ag. "or"Périto Agricola") at the Agriculture faculties in Cochabamba, Santa Cruz, Tarija and other departments

  FOMO instructors

  Private voluntary organizations and other groups with extension services

- Development of models and module for campesino training courses in pilot training programs

- Performance studies of campesino training courses in pilot training programs

- Performance of studies in campesino communities documenting the experience of introducing AT

- Establishment of village mechanics shops for the graduates of the existing village mechanics training courses held at CIFEMA and the CCM (Mennonite Central Committee) Demonstration Farm, among other localities.

A general problem area which must be addressed is the elitism of agricultural researchers and the need to disseminate the results of agricultural research to small farmers. Even an effort to train a selected number of extension agents in AT, for example, the extensionists attached to the IBTA centers (see Institution Section, IBTA), does not guarantee that the AT will be suitably diffused to Bolivian campesinos. Prejudices must be overcome, including the image that small farmers are men--a particularly erroneous concept in the Altiplano and Valles where women campesinos carry out specialized functions in most aspects of agricultural production. In several areas of Bolivia, agricultural extensionists are well trained in "modern" agricultural technologies but are ignorant of the system of agriculture practiced by the local campesinos.

A proper thrust for the AT program in agriculture will be to foment the popularized presentation of the results of AT research innovations. Efforts should be concentrated upon the development of popular manuals and other teaching aids, drawing from the information which will be gathered at the AT DOCUMENTATION CENTER and the experience of feedback from attempts to introduce AT to Bolivian campesino communities.

AT in Agriculture at the research and development ADAPTATION stage is strong and already supported by international funds. The DIFFUSION of this knowledge is weak, as is any systematized integration of the feedback from Bolivian campesinos to the AT researchers. It is recommended that the efforts be concentrated at the stage of DIFFUSION.

Like the Water and Sanitation Advisor, the Agricultural Advisor would be in a position to comment upon any plans for projects in Agriculture reaching the Ministry of Planning and Coordination. This is a critical position from which to introduce AT into any Agriculture project to take place in Bolivia.

By commenting carefully upon any new proposed projects, the Agriculture Advisor and the Bolivian counterpart would be able to screen out duplication of past efforts and to direct project planners to information accumulated in the AT DOCUMENTATION CENTER.

RURAL SMALL SCALE INDUSTRY AND ARTISANRY: A PROGRAMMATIC AT INITIATIVE

Problem: Rural industry exists at a low level of development. Stagnation and organizational or structural defects inhibit development even in areas of expanding production.

Strategy: The Programmatic AT Initiative in Rural Small Scale Industry and Artisanry will implant and develop pilot model industries which may serve as effective demonstrations to stimulate replication in other rural communities. These pilot industries will be established to generate full time, permanent employment opportunities in communities with a high rate and concentration of "felt-need unemployment" and sufficient skills. Pilot industries will produce commodities, especially Appropriate Technologies, for which a sufficient national Bolivian market demand now exists, to assure the economic feasibility of the industry. The pilot industries will be organized as Worker Self Managed Enterprises (WSME) in a central production facility which features ex-fab (factory outlet) sales.

Pre-Feasibility Study Phase

Screening Potential Rural Industries from Existing Plans

A survey will be undertaken to assess and evaluate a broad list of existing plans for potential pilot industries at the level of the departments of Bolivia. Several of the Department Development Corporations (DDC s) have such plans and project profiles on file, though these plans are rarely given high priority in the allocation of DDCs' budget resources. (See, for example, the Institution Section for the CORDECRUZ (Regional Development Corporation of Santa Cruz) small scale industrial plans). Other groups, such as the Club de Madres, producers' associations and non-profit social action extension groups are sources both of existing plans to foster rural small scale industries, and of candidates trained and experienced in democratic processes, group dynamics and leadership skills, who would be capable of helping to organize pilot industries. Banks offering loans through the special credit program to artisans and industries are an additional source of pre-existing plans.

This survey would be conducted by the Rural Small Scale Industry advisor, the Bolivian OCT industrial specialist counterpart and a rural sociologist, working in conjunction with the DDCs.

As a step in the preliminary evaluation of existing plans, simple mini-industrial profiles will be prepared for the most promising options. It is important to note that the Government of Bolivia had specifically requested a small industries specialist to work with the DDCs in its original formulation of the on-going AID Grant funded Rural Development Planning Project (Rural Development Planning Project Paper, May 1978, Annex B). This project as it is being implemented will provide only short term assistance of this type. The work of the Rural Small Scale Industry AT advisor, the Bolivian counterpart and the Rural Sociologist in commenting upon and developing the existing plans of the DDCs for rural industries during this survey will fill this GOB request.

On Site Feasibility Surveys of Community Pilot Sites

After screening the broad list of plans, the experts would perform on site feasibility surveys of the sociological and human needs of several promising communities in several departments specified as the potential locations for rural industries. These studies will narrow down the number of promising communities where pilot industries might be located. The final selection of the sites will be weighed heavily in favor of sociological factors within the proposed communities.

Product Feasibility Surveys

After performing the feasibility studies of the communities where potential rural industries may be located and selecting those communities which show the best prospect for implanting WSMEs, studies will be undertaken to determine the feasibility of the product that industries in those communities could produce. These studies will include market studies of the Bolivian national or international demand for the proposed products, technical studies, economic studies including costing out raw material supplies, distribution chains, transportation etc. and financial feasibility studies.

While the organizational form of the industries to be implanted will follow the Worker Self Managed Enterprise model, which is described in detail in the draft report (Frost, Wayne. Appropriate Technology for the Bolivian Rural Artisans and their Industries. December 1979, pp. 47-60), the types of products produced will vary. A variety of industry types by product will be a criterion for the final selection of three communities and the industries to be implanted in these locations.

Types of Industry

Rural handicraft production has provided the major source of off-farm rural employment; at least one of the industries selected for pilot implementation should be a handicraft industry to provide an effective demonstration of the potential and capability of this sector in the reorganized WSME format.

At least one of the pilot industries selected for implementation will be an industry which has not yet been introduced into rural Bolivia and which is not in the field of handicrafts.

Examples of the types of small scale industry and artisanry which could be introduced into rural Bolivia as Worker Self Managed Enterprises are discussed in other sections of this report:

- Illustrations of rural industries which exist in the project planning phase in Bolivian Department Development Corporations are given in the institution report on CORDECRUZ: the Regional Development Corporation of Santa Cruz (see Institution section, DDCs, CORDECRUZ, Small Scale Industry and Artisanry activities, below).

- In the Small Scale Industry and Artisanry Chapter Four AT INVENTORY a filtered water storage unit is described as

Potential or Suggested AT. A process to introduce such units to Bolivia and a plan for beginning their manufacture by local potters is also described. This represents an example of an industry which could be promoted in rural areas which would produce AT items as products.

- Other potential industries are given in the discussion of an AT Program in Water and Sanitation (see this chapter, below). The proposed Water Supply Implementation Project includes components

  - To implant the manufacture by local Santa Cruz metal craft workers of improved well drilling rigs,

  - To implant the local Santa Cruz manufacture of an Ingavi pump adapted to local conditions,

  - To train well drillers and establish them in small well drilling businesses

- Existing artisanal producers' associations such as La Khochalita (see Institution section, Cooperatives and Communities, below) and cooperatives such as Q'ante Cooperative (see Institution section, International Voluntary Service (IVS), below) could also be reorganized as Worker Self Managed Enterprises.

Weight will be given to select a variety of industry types and, among these, to select as pilot project industries those which will produce AT items for the consumer market. The potential for replication will be a major criterion in the final selection of the pilot industries to be developed.

Pre-Implementation Phase

After the selection of three (to six) pilot industries, suitable consultants will be contracted to aid in the installation of each industry. For example, if one pilot industry is to produce canned goods, a suitable technician will be contracted.

A group of not less than twenty nor more than thirty members of the community at each pilot site will be selected for preliminary orientation and general instruction in group skills beneficial to the group whether or not they are later selected for technical skills training.

Assistants who will serve as the project monitors will be selected and trained by the rural industry specialists.

Social promoters who will work under the direction of the rural sociologist will be selected and trained.

Staff of participating institutions will be trained and oriented.

Simple systems for the daily accounting, commercial and control requirements of the WSME's will be designated.

Project base-line data in the communities selected for the pilot industries will be collected in order to evaluate project success at a later date.

The most important work of the team, however, will be to prepare a budget which details the costs of establishing the central production facility, technical assistance equipment, training of the workers until self-sufficiency is achieved and other cost aspects. A plan to finance the implementation of the pilot industries will draw minimally from grant funds from the Appropriate Technology Program. Rather, other sources will be identified, including:

- Conventional commercial bank loans for start up industries
- Guaranteed loan programs such as the USAID guaranteed Agribusiness and Artisanry Loan Program
- USAID guaranteed Production Credit
- Ulla Ulla Project loans to artisans
- Department Development Corporation discretionary budget funds and special loans or guarantees
- CONEPLAN or Ministry of Planning and Coordination budget funds, special grants, loan programs or loan guarantees
- Other International Financial Institutions' loan programs.

These sources will supply the capital required for implanting of the proposed pilot industries, including the costs of additional specialized industrial advisors. Some policy changes in the loan programs may be required, however. The type of credit terms common to existing USAID and IFI programs is described for the Ulla Ulla Project (see Institution Section, Ulla Ulla Project, below). Credit is available for the purchase of equipment and for technical assistance, but not for the working capital required to pay workers in training until factory outlet sales can begin. Modification of the time period before payback from five or six years at present to a period of ten to twelve years may also be necessary. Although self-sufficiency could be achieved by Worker Self Managed Enterprises in new rural industries within as little as nine months after the start of production, the longer loan term will prevent a crisis of a sudden increase of profits in relatively new enterprises.

In identifying sources for financing specific industries, the Small Scale Industry and Artisanry AT Advisor and the Bolivian counterpart will also compile recommendations for such policy changes.

The implementation phase, therefore, will be supported by various existing funding sources and "follow on" loan projects.

WATER AND SANITATION: A PROGRAMMATIC AT INITIATIVE

Problem: Existing programs to build rural water supplies and provide environmental sanitation in Bolivia integrate little AT. The most appropriate technologies for sanitation need to be transferred and adapted to local conditions.

Strategy: The Programmatic AT Initiative will introduce AT into water and sanitation projects and promote AT campesino consumer pumps and well drilling currently in Bolivia to stimulate a large scale demonstration effort in the colonization areas and other heavily settled parts of rural Santa Cruz. The initiative will also transfer and adapt appropriate technologies for rural sanitation in the Southern Bolivian departments and other regions which are the focus of the most energetic and best funded current campaign to provide Bolivian campesinos with adequate environmental sanitation.

Introduction of AT into Water and Sanitation Planning

The Water and Sanitation Advisor and the Bolivian OCT counterpart will function as Information Desk Officers to facilitate dissemination of existing innovative, low cost water supply and sanitation technologies. The Ministry of Planning and Coordination should, by law, receive copies of all plans for water supply and sanitation projects in Bolivia. As desk officers in this ministry, the Water and Sanitation Advisor and the counterpart in training should be in a strategic position to advise on all water and sanitation projects. Their role will be to receive in a normal routing procedure a copy of any project plan for water supply and sanitation and to comment upon the appropriateness of the technical and economic aspects of such plans. They will be in a position to suggest alternative technologies to those proposed, which would be more cost effective and appropriate. Theoretically, at the level of CONEPLAN, the Ministry of Planning and Coordination has the authority to reject plans or to require their reformulation. Project plans which depend on outside, assured funding may be more difficult to influence; however, the water supply and sanitation efforts of the Bolivian Government agencies such as Saneamento Ambiental could be required to comply.

Promotion of Promising Current AT in Rural Water Supply

The most promising technologies now in Bolivia should be promoted. Compost toilets should also be introduced in demonstration projects to be conducted largely by the Advisor and the Counterpart in conjunction with Bolivian institutions contracted under the SMALL PROJECTS FUND.

DEMONSTRATION PROJECT IN WATER SUPPLY FOR SANTA CRUZ

Among the most promising technologies now in Bolivia are the nationally manufactured hand pump and well system developed by the INGAVI PROJECT (see Institution Section, INGAVI and the AT Inventory for Water and Sanitation, below) and the simple low cost well drilling methods developed and implemented by the CCM (Comité Central Menonita - Central Mennonite Committee: see Institution Section, CCM and the AT Inventory for Water and Sanitation). At present, these technologies are not well known. Although CCM works in Santa Cruz, neither

CORDECRUZ nor the National Community Development Service in Santa Cruz, both of which have minor water supply components in their programs, are apparently aware of the Mennonite well drilling techniques. Neither institution is mounting a program to provide individual water supply.

To resolve this communications bottleneck, the Water and Sanitation Advisor and the Bolivian OCT counterpart should arrange a meeting among 1) the Water Supply Department of CORDECRUZ, 2) the promotion and training department of the National Community Development Service and 3) the CCM welldrillers. This interaction would include field visits to existing wells and to wells in progress and hands-on demonstration of the equipment. The possibilities of a collaborative effort should be explored. An additional participant in such an initial demonstration meeting could be the Department of Environmental Sanitation (DSA) engineer. Although it would be informative to have this individual aware of the method, DSA is so understaffed that it is doubtful that DSA could participate in any program, except to make the public aware of the alternative as a part of regular DSA sanitation promotion.

The potable water department of CORDECRUZ has exhausted its funding. The departmental oil revenues have dropped; rural services have been cut. Before CORDECRUZ could ever implement a department-wide rural water supply project, the water tables of the department must be mapped for depth and the first water table tested for water quality. This will determine what areas can use shallow wells and areas, like Puesto Fernandez, which require deeper wells to the second water table level.

Data Collection: Santa Cruz Ground Water Mapping

As part of a programmatic effort in Water Supply, a special data collection contract should be offered through the SMALL PROJECTS FUND to prepare ground water maps for comprehensive planning. CORDECRUZ, with its survey crew and engineering staff, might be a likely candidate for such a contract, though another institution may also be capable of and interested in such a contract.

This Ground Water Mapping Project would provide contract funds for the following:

- Collation of existing information about water tables and water quality generated from the experience of the volunteer and private well drilling efforts and recorded in the logs of geologists who do exploratory borings for the petroleum companies

- Purchase of a small drilling rig to speed water table survey work from one of the geology companies or to be manufactured by a local craftsman.*

*Goyo Prada (see AT Inventory in Water and Sanitation, the Henry-Prada and Prada well drilling methods, below), for example, has plans for building a small rig which can be mounted on the back of a pick-up truck. He estimates the cost of this rig at about b$100,000 or US$5,000 for the diesel engine powered drill and diaphragm mine pump to recirculate drilling water.

- Purchase of a portable "Hach" type water laboratory to test water quality and report results

- Sufficient survey crew work months to drill and test water wells in areas complementary to those areas for which information already exists

- Sufficient engineer and draftsperson work days to prepare a comprehensive map of ground water resources in the more densely populated rural areas of Santa Cruz, sufficiently detailed as to plan what types of wells will be required in different localities.

The result of this data collection effort will be a more realistic estimate of the resources which will be required to deliver rural water supplies in Santa Cruz.

Adaptation of Ingavi Well Pump to Santa Cruz

Another AT aspect appropriate for a water supply planning effort in Santa Cruz would be the introduction of the Ingavi well pump for local conditions. In order to support this introduction and adaptation, another contract could be made available from the SMALL PROJECTS FUND for the adaptation of the Ingavi well pump to local conditions.

The cost and complexity of the Ingavi pump might be reduced by substituting a cast in place concrete pedestal for the steel pipe pump body. The pump handle would be local wood with a pivot arrangement on the pedestal. Whatever the final design, local manufacture could be arranged and a warehouse and storage yard established to stockpile materials like the plastic pipe for the well casing. These materials could be purchased in bulk for maximum savings on cost and transportation. This is actually a necessity more than a convenience. The Ingavi pump is designed to use thick wall 2½" diameter PVC pipe which is not normally available in Santa Cruz. The pipe would have to be available at the time of the drilling to case the well even if the pumps were to be added at a later date when they became available.

Implementation of Demonstration Project in Water Supply for Santa Cruz

These two projects would develop the resources necessary to begin a broad demonstration project to provide individual water supply systems to rural Santa Cruz campesinos. A plan for such a demonstration program would be the next sequential effort of the Water Supply and Sanitation Advisor and the Bolivian counterpart. This plan should involve the manufacture of equipment, well drilling rigs and Ingavi pumps as adapted to local conditions by local shops in Santa Cruz and the collection of an adequate supply of other components, such as plastic pipe.

The model of offering well drilling services to individual families pioneered by the CCM volunteers seems viable. Well drillers could be paid for their labor by the families receiving the wells. Efforts can be concentrated on producing the necessary equipment, training a well driller, promoting the service, assuring an adequate supply of materials and distribution of these materials and developing a credit program to facilitate individual payment for the wells.

Production of the necessary equipment appears feasible. At present, the CCM volunteers have discovered local craftspersons and shops capable of producing well drilling rigs for approximately US$2,500 each. Ingavi pumps are already produced in Bolivia and the necessary skills in metalworking to develop a Santa Cruz branch of this industry exist.

The goal of training well drillers would be to train one driller for each rural community. Well drillers could be trained in groups from the same general local areas to concentrate the effort and provide backup. Assuring an adequate supply and distribution of materials is critical to the plan. By manufacturing, and for some components, by importing large lots, a subsidized price structure for the materials could be created. Distribution of these supplies should, however, be under some centralized management to assure sufficient supplies to meet local demand.

Promotion of the program could be extended through extension services. It would be important to assure that once a well driller were trained and equipped that there would be sufficient demand in a particular community or area to warrant the specialized efforts of the welldriller.

Finally, a special credit plan would be required, both to offer credit to the manufacturing units, the independent well drillers and to the consumers. Individual families should be allowed to pay off the cost of wells over time, considering the annual fluctuations in access to cash which small farmers in the Santa Cruz region experience. If credit were not provided for consumers, it is likely that demand for well drilling would be concentrated only during periods after the sale of harvests.

This plan could be carried out by a variety of institutions in Santa Cruz, each playing a specialized role and acting in collaboration. Among the candidate institutions are the CCM, as a training and advisory group; the National Community Development Service, as a promoter and possibly as a training entity and intermediary retailing supplies; CORDECRUZ, in a joint effort of its Department of Water Supply and its Small Industries efforts; local banks and the Department of Environmental Sanitation, the local Sanidad and the Montero project, acting as promoters in the course of their preventive health education programs.

The virtue of this plan is its generation of employment -- for local craftsmen and to expand the occupation of well driller -- in the course of assuring an adequate supply of safe drinking water to campesinos.

PILOT PROGRAM TO INTRODUCE COMPOST PRIVIES

The Water and Sanitation Advisor and the OCT Bolivian counterpart would also undertake another pilot program. In the area of sanitation and rural privies, Bolivia now operates with very limited models. The technology which has the highest recommendation is not yet introduced to Bolivia. Before a new technology can be introduced into the general Bolivian rural sanitation program, it must be proven on a pilot scale and adapted to local conditions and building materials. Such an effort will be mounted as a PILOT PROGRAM TO INTRODUCE COMPOST PRIVIES. Because compost privies involve two new concepts (sanitation and compost fertilizer), a good deal of promotion and education will be necessary for their adoption. Such a pilot program would be most suitable contracted to a private voluntary organization that places emphasis on education.

Numerous organizations and agencies expressed an interest in composting and compost toilets during the interviews of the AT Survey. Three organizations, CARE, the CCM and Plan de Padrinos (see Institution Section for reports on each of these groups) were specifically interested in training programs on the topic and had projects in which they could develop and field test prototypes. CCM has a training farm in Santa Cruz (see Institution Section, CCM, Special Programs, below) and the Plan de Padrinos has a demonstration community center in Tambillo (see Institution Section, Plan de Padrinos, below).

The PILOT PROGRAM TO INTRODUCE COMPOST PRIVIES would be offered as a contract under the SMALL PROJECTS FUND. In this case, serious consideration should be made to awarding the contract to CCM and Plan de Padrinos on a sole source basis, as they operate in different areas of the country. The local adaptation developed for Tambillo would serve the Altiplano, and through their links to CARE, the Plan de Padrino pilot experience could be shared with CARE which has a latrine component in the water supply program it is developing with CORDEPAZ. The experience of the CCM would serve as a model for Santa Cruz, which could be then applied more broadly by collaborating with the Montero Rural Health Project to incorporate the resultant privy design and compost method into the Montero environmental sanitation program. CARE and the Montero Rural Health Project expressed interest in plans for latrines in high ground water areas. Both institutions are involved in duplicating and replicating their local programs around the country. It will be important to upgrade their latrine component before broader demonstrations begin.

The proposed pilot project would involve developing prototypes at at least two centers in different ecological zones using local materials. AT advisors with field experience with composting and compost toilets who are accustomed to giving workshops and training programs will be required to assist the PVO's contracted. A six to nine month effort should be sufficient to give a half dozen workshops, to develop two prototypes and to develop a training module for promoters.

During the development of suitable designs, classes will be held on composting and the role of organic matter in soil fertility and crop production. The training module to be developed from this experience with the trainers and promoters would include information on the construction, use and maintenance of the privies and the merits and use of composting. Promoters from the two contracted PVO's would be requested to build a privy of the design developed at home to field test the model and to demonstrate the design. If the designs proved acceptable and were utilized during this limited experience, then the PVO promoters would use the training module to disseminate the technology in local communities and to feed back the experience of local campesinos into the design and the training module. After pilot projects were completed in several local communities, the model and the module could be shared with organizations in a position to demonstrate the privies in a country-wide effort.

ENERGY: A PROGRAMMATIC AT INITIATIVE

Problem: There is not at present a sufficient data base to plan for the use of solar and wind energy devices in Bolivia. Few prototypes of solar and wind energy devices have been adapted locally and their diffusion is weak.

Strategy: Efforts will be made to upgrade and expand Bolivia's efforts to measure wind and solar energy potential with specific data to integrate into the selection and adaptation of technological designs and applications.

DATA COLLECTION - PHASE ONE

Wind

A program will be undertaken to enlist local educated observers to record wind data. These individuals will be provided with run-of-wind, odometer type anemometers of an all mechanical design (e.g., types manufactured by William Lambrecht of West Germany and Gasella of Great Britain) in exchange for their reports. While more expensive than electrical counterpart devices, mechanical devices are more reliable and durable. Individuals will also be provided with handbooks detailing how wind measurements will be mailed to a central data receiving and processing point for computer banking and analysis.

The recommended institution to undertake this program is the Ministry of Education. Schoolteachers are widely dispersed in Bolivia; recording devices could be distributed along already established lines of procurement. By placing the data collection program in local schools, equipment for teaching science and wind energy principles would also be promoted. As an alternative or supplementary institution, the cooperation of churches and religiously affiliated local groups could be enlisted.

Solar: Regional solar radiation is more uniform in Bolivia than are wind patterns. Therefore, a program for additional data collection could be placed in the existing recording stations. These would be equipped with global solar radiation instruments to provide a sufficient data base.

The recommended counterpart organization for this solar data collection program would be the Bolivian airport authority (AASANA), an autonomous agency.

The central point for receipt of data logs and data processing would be the Servicio Nacional de Meteorologia e Hidrologia.

DATA COLLECTION-PHASE TWO

Wind prospecting or the locating of optimum wind sites requires additional measurement instruments: mobile wind-run anemometers and frequency distribution analysers. It is recommended that INER (National Institute for Rural Electrification) be provided with grant funding on a sole source basis to undertake a program of wind prospecting, according to principles set forth in the Handbook for Selecting and Evaluating Sites for Wind Energy Systems.

INFORMATION TRANSFER

A number of windmill prototypes and solar energy devices have already been developed in Bolivia. Construction booklets and technical information in Spanish will be provided to those groups and individuals working with these technologies. Small grants will be offered to such groups to develop texts and diagrams concerning their own devices to be shared with other groups and banked in the AT Documentation Center. Workshops and conferences to bring together representatives of groups working on specific areas of renewable energy such as water resources, wind solar or biogas will be developed. These workshops should be highly interactive and structured for technical people working in the field.

ADAPTATION

The Small Projects Fund Grants Program will specifically solicit proposals from groups working to adapt renewable energy devices and provide funds for the construction/installation/implementation of energy devices at the community level among Bolivian campesino groups.

In addition, one or more requests will be made for proposals to determine the economic feasibility of large wind electric systems for parallel generation with diesel generators where mean annual wind velocities exceed twelve to fourteen mph (sea level density). Suggested sites include Corocor, southwest of La Paz, where 2,000 kw are used in mining; Challapata and areas east of Lake Poopo, where 300 kw is used for calcium production and 3,000 kw for cement production respectively; in the mining towns of Tatasi, Tupiza, San Vicente or Ingenio, northwest of Tarija, where several thousand kw of diesel capactiy are used.

Also, an RFP will be tendered to modify rooftop water storage tanks to be more effective passive solar collectors.

DIFFUSION

Under the Small Projects Fund Contract Program, institutions will be solicited which are capable of installing prototypes (manufactured in Bolivia or obtained from foreign sources) of the following on a pilot project basis in selected Bolivian campesino communities. The institutions contracted will study the reactions to and reception of the technology in these communities. The following types of devices will be introduced through this contract program:

- Solar evaporative distillation devices
- Metal cook stoves combined with pressure cookers
- Solar cookers
- Phylon roofing as a passive solar heating device
- Solar water heaters after the CIFEMA design
- Bicycle, foot or small windmill driven water pumps for irrigation

- Small photovoltaic systems with battery storage.

Basic technical specifications for the construction of these devices, or examples (prototypes) will be provided to groups which win these contracts. The ability of the groups to perform the pilot projects in renewable energy will be assessed primarily in terms of the length of time the group has been in contact with the community proposed for the pilot project, the administrative capacity of the organization to construct the technology with established craftsmen, and the ability of the organization to train recipients to use the technology and to document the reactions to and use of the technology for a period of at least one year after installation. The institutions selected to receive these pilot project contracts must deliver a final report which evaluates the projects and suggests improvements in aspects of its design adaptation, information needed to train local people for its use, and proper tactics for promoting the use of the technologies in similar communities.

ALTERNATIVES TO THE OCT AS COUNTERPART INSTITUTIONS

OCT is the most suitable counterpart institution for the AT Program in terms of the GOB's defined strategy for achieving coordination. Two related problems may undermine the feasibility of this choice of counterpart institution: OCT is at present small and too understaffed to carry out the AT Program as proposed; the GOB may not wish to contribute the support of up to five new OCT professionals, who would be the advisors' counterparts, and the necessary new clerical, translating and drafting support workers. The immediate means to overcome this problem is the strategy of providing some AID AT Program Grant funding to support the new AT Bolivian counterparts' professional positions in OCT. There are precedents for such an arrangement. The long term problem which may then arise is these positions as AT advisors might fail to enter the regular organization and budget of the OCT. The on-the-job training of the Bolivian counterparts in Appropriate Technologies and AT networking would then be a loss.

To achieve coordination specifically in the AT field, at least two other institutions in Bolivia could be considered as alternative channels for the consolidated AT Program and as a source of AT counterparts for the advisors. These are COCOP (Comite de Coordinación y Promoción de Tecnologia Apropriada - see Institution Section: Bolivian Affiliates of International Organizations) and the Bolivian National Academy of Sciences (see Institution Section: Bolivian non-profit organizations).

The choice of either institution would require a courtesy arrangement with the Ministry of Planning and Coordination, perhaps arranged through the OCT (Office of Science and Technology) to allow the AT advisors and their Bolivian counterparts to review plans for projects in the respective sector of each. Given the natural delays in routing, this represents a disadvantage. Of the two potential alternatives, the Bolivian National Academy of Sciences is the more established institution. It currently received funds from the GOB, is clearly articulated with educational institutions throughout Bolivia and derives partial support from the Bolivian private sector. The Bolivian National Academy of Sciences, however, shares with OCT the disadvantage of centering its activities in La Paz.

COCOP is a younger organization, still motivated by the enthusiasm of a new and hopeful start. As an umbrella organization, COCOP is clearly linked to social action extensionist groups and agencies which work directly with Bolivian campesinos.

The choice of either the Bolivian National Academy of Sciences or COCOP would preserve the model of locating all five AT Advisors together in a single institution. From this Bolivian institution, they would draw counterparts and work together with these counterparts and support staff to develop a centralized AT DOCUMENTATION CENTER and establish and manage the SMALL PROJECTS FUND, as well as move out from this base organization to set up the sectoral pilot projects described above.

ALTERNATIVE TO THE MODEL OF LOCATING AT ADVISORS IN A SINGLE INSTITUTION: THE MODEL OF MULTIPLE COUNTERPART INSTITUTIONS

An alternative model for the AT Program involves dispersing the sectoral AT advisors to various institutions more directly concerned with the sector of each. In this model, only the AT Program Administrator would be attached to an institution such as OCT, the Bolivian National Academy of Sciences or COCOP. The sectoral advisors would be dispersed to other sectoral counterpart institutions.

The AT in Agriculture Advisor could be based in Cochabamba, where there are several alternative institutions from which this sectoral advisor could draw a Bolivian counterpart. In his draft report, Dr. Harvey Newton, the AT Agriculture consultant, suggested CIFEMA. Other Cochabamba institutions which might be considered include the Faculty of Agriculture at the San Simon University (see Institution Section: Educational Institutions), the San Simon University Extension Service (see Institution Section: Educational Institutions) or the Centro Pedagogico Portales where the Proyecto Agrobiologica works (see Institution Section: Bolivian Affiliates of International Organizations).

The AT in Small Industry and Artisanry Advisor would be based at the FOMO (Fomento de Mano de Obra --see Institution Section) in the Ministry of Work and Labor Development a counterpart institution most suitable for this sector. The nature of this particular advisor's work would involve a good deal of travel among the DDC s, but the Bolivian counterpart could be drawn from FOMO.

The AT in Water and Sanitation Advisor could be based in and draw a Bolivian counterpart from either the Division de Saneamiento Ambiental headquarters in La Paz or the CARE headquarters: CARE is mounting a large program in Water and Sanitation in southern Bolivia. The work of the AT in Water and Sanitation Advisor and the Bolivian counterpart will take them to southern Bolivia and to Santa Cruz to establish the pilot projects in the sectoral program described above.

The AT in Energy Advisor could select the La Paz headquarters of INER as a home institution and draw a Bolivian counterpart from the INER staff. INER (see Institution Section: Ministerial Level) is the most active governmental agency working on the national ministerial level in the rural energy field.

The model of dispersing the sectoral AT advisors to several counterpart institutions would complicate the role of the longer term AT Program Administrator. The unduplicated function of the AT Program Administrator would be to establish and manage the SMALL PROJECTS FUND. The other AT sectoral advisors would draw support for the pilot projects they each set up from this fund, and would function as members of Merit Review Panels. The presence of the AT Program Administrator would be critically required at whatever institution originated the grants and contracts of this fund, whether the OCT, the Bolivian National Academy of Sciences or COCOP.

Dispersal of the AT sectoral advisors would not weaken the AT Program. This model might even strengthen its impact. The central effort of the AT Program is to be directed at coordinating AT activities in all stages of the AT process throughout Bolivia, and secondarily, to accomplish a TRANSFER of AT materials to a centralized AT DOCUMENTATION CENTER. The type of coordination needed to manage the AT PROGRAM will require coordination of the efforts of ministries,

DDC's, educational institutions, private voluntary organizations, international organizations, etc. It makes little difference whether the sectoral AT Advisors are dispersed in some of the institutions which must be coordinated or whether the work in each sector originates from a central coordinating institution. The AT Program Administrator can coordinate the sectoral advisors' work from a centralized office or out to dispersed locations. In any model, coordination must begin; an AT DOCUMENTATION CENTER must be stocked and a SMALL PROJECTS FUND must be established and managed. The special strengths of the model of dispersing the effort would be the following:

- Each sectoral AT Advisor would be working more closely and routinely with the institutions and persons active in the respective sector.

- It may prove more feasible for five different Bolivian institutions to provide and to support with institutional resources (rather than USAID AT Program funds) one Bolivian counterpart than for one institution to provide five counterparts.

SHORT TERM TECHNICAL ASSISTANTS AND CONSULTANTS

A program of this complexity will require the services of short term technical assistants and consultants including social scientists to provide BOPS and EOPS for the program as a whole and its sub-projects, and technical AT consultants to provide on site, in person transfer of certain technologies.

QUALIFICATIONS FOR THE AT PROGRAM ADVISORS

The success of the proposed Appropriate Technology Program for Bolivia will rest in large part upon the performance of the AT Advisors: their ability to respond to the strengths and constraints of Bolivian institutions, their sensitivity to the sociocultural environment, their judgement in selecting specific technologies for application and their sympathy and openness to Bolivian rural people. One of the major assumptions of the proposed program (see Log Frame) is the AT Advisors will be able to perform capably. To promote the selection of candidates who are more likely to perform well in the functions described above, the following qualifications can be specified:

Qualifications of the AT Program Administrator

- Higher university degree in a Social Science, Administration or Law (M.A., Ph.D., L.L.D. etc.)
- Sufficient life experience and executive ability to be acceptable as a Senior Advisor
- Bilingual fluency in idiomatic Andean Spanish and English
- Sensitivity to Bolivian institutional framework and Bolivian campesinos through prior work in Bolivia or a neighboring country
- Administrative experience simultaneously relating to several types of organizations (e.g. government agencies, private voluntary organizations, community organizations, church-related groups)
- Administrative experience providing back up support for a dispersed team of co-workers
- Experience with grants and contracts, merit reviews of proposals
- Ability to supervise translation, drafting, editorial production of AT Documents
- Conference and workshop organizing

General Qualifications for All Four Sectoral AT Advisors:

- B.A. or better in a Technical or Natural Science
- At least two years experience working in direct interface with rural people and rural communities in Latin America, preferably with "hands on" experience in extension or the adaptation and diffusion/training of AT
- Idiomatic Andean Spanish fluency--at least Department of State 4.5 or bilingual rating

- At least two years experience in AT networks, associated with organizations promoting AT

- At least two years experience in the application of AT in the relevant sector.

Special Requirements:

For the AT Advisor in Agriculture:

- Experience related to the transfer, adaptation to local conditions and diffusion/training of AT handtools, Andean crops, composting applications including hotbeds, greenhouses, other intensive horticultural techniques or aquaculture, methods to intensify slash and burn agriculture, forage and pasture use/rotation, forestry, and/or animal traction

For the AT Advisor in Small Scale Industry and Artisanry:

- Experience in the application of AT in small scale industries or artisanal production, especially of woolen woven goods, metalcraft, ceramics or woodworking

- Experience in the organization of Worker Managed Enterprises, Producers' Cooperatives, or equivalent production units managed by the artisans or industrial labor force itself

- Experience in marketing and marketing studies

- Experience in plant layout and industrial design

For the AT Advisor in Water and Sanitation:

- Experience in the construction, adaptation and diffusion of AT water supply technologies, especially well drilling in a variety of terrains, pumps developed from locally produced materials of local manufacture, and water storage and filtration systems

- Knowledge of a variety of privy types: above ground vault, pour-flush systems and especially composting privies

For the AT Advisor in Energy:

- Experience in the transfer, adaptation and diffusion of energy devices based on renewable energy sources, especially passive and active solar, water powered, wind powered or biogas

- Experience with data collection and analysis for wind and solar measurements.

Figure I:1

Log Frame for the Proposed Appropriate Technology Program for Bolivia

Figure I-1 p. 1

PROGRAM DESIGN SUMMARY

NARRATIVE SUMMARY	OBJECTIVELY VERIFIABLE INDICATORS	MEANS OF VERIFICATION	IMPORTANT ASSUMPTIONS
Goal Bolivian campesinos accept and implement AT that responds to their needs for improved agricultural production and efficiency, off-farm employment in rural small scale industry, an uncontaminated water supply, sanitation, and inexpensive, renewable energy.	Campesinos in AT beneficiary areas use AT. Campesinos in AT beneficiary areas perceive benefits of AT. Project AT diffuses beyond beneficiary areas. Agricultural productivity and efficiency improved x%/year. Off-farm employment increased x% over population growth. Water supply less contaminated-x% fewer parasites. Sanitary conditions improved x% of population uses facilities. Energy supply increased x% of households use AT sources.	At beginning of project and at end of project in beneficiary and control areas: BOPS and EOPS social, economic and ecological evlauations.	Assumptions for Achieving Goal AT program personnel, contractors and grantees recognize the constraints faced by campesinos and respond to the priorities expressed by campesinos and artisans. AT is properly selected and applied in the program so that campesinos benefit both actually and in their own eyes.
Purpose Bolivian institutional framework established or augmented for continuing coordination and upgrading of AT activities in four sectors: agriculture, small scale industries and artisanry, water and sanitation, and energy	All participating Bolivian institutions have created positions for AT advisors and filled those positions with suitable people.	Tables of organization resumes, and site visits.	Assumption for Achieving Purpose Bolivian institutions will support AT advisors and administrative positions at end of project; GOB welcomes AT alternatives: AT advisors transfer skills: counterparts stay on the job or train replacements.

Figure I-1 p. 2

PROGRAM DESIGN SUMMARY

NARRATIVE SUMMARY	OBJECTIVELY VERIFIABLE INDICATORS	MEANS OF VERIFICATION	IMPORTANT ASSUMPTIONS
Purpose			Assumptions for Achieving Purpose
	Plans and budgets prepared for continuing AT programs.	Plans, budgets, and site visits.	Bolivian counterparts, AT documentation center staff, grant recipients, contractors and beneficiaries will continue to demand and supply AT after end of grant program.
	Bolivian institutions, local groups (such as campesino communities and artisanal cooperatives) and individual low-income rural residents are requesting and exchanging information on AT among themselves and with the AT documentation center.	Documentation center records; conference and workshop records; correspondence files; institution site visits.	Continuing resources available for small projects. Criteria and merit review for personnel and small project selection and maintained.
	AT advisors and counterparts have consulted with national, international and regional rural development project planning organizations and have achieved use of AT in at least one project in each of the four sectors.	Advisor records; development plans and technical or social specifications; site visits and interviews.	All program personnel recognize the realistic resource constraints by campesinos.
Selected AT transferred, adapted, to local conditions, diffused and accepted by Bolivian campesinos participating in pilot projects.	Pilot project and grant AT observed in use by campesinos in rural areas as per terms of small project and grant contracts.	Site visits by social scientist to communities where contractors and grantees diffused AT, and, to control communities.	

Figure I-1 p. 3

PROGRAM DESIGN SUMMARY

NARRATIVE SUMMARY	OBJECTIVELY VERIFIABLE INDICATORS	MEANS OF VERIFICATION	IMPORTANT ASSUMPTIONS
Outputs	Magnitude of Output		Assumptions for Achieving Output
AT documentation center established and functioning with information in usable form at OCT, COCOP, or National Academy of Sciences.	AT documentation (plans, technical information, field trials, etc.) in Spanish and other Bolivian languages are ready for response to requests.	Site visit by AT document specialist.	Little institutional competition for resources.
	x/month requests for information met during each 6 months of project.	Documentation center records. Financial audit.	
	Data for solar and wind energy and for Santa Cruz water table recorded and analyzed.		
Small project fund has successfully administered grants and contracts and has capacity to continue independently.	x grants and contracts for AT projects awarded and administered starting in year 2 of project.	Small project grant and records. Financial audit.	Capable staff chosen.
	x grants and contracts in pipeline.	Visits to sample of recipients.	
	Majority of small projects and funds received by purely Bolivian organizations		
	Atleast 15% of projects and funds received by bilingual or non-Spanish monolingual purely Bolivian organizations.		
Programmatic AT initiatives* in the sectors of agriculture, small scale industry, water supply & sanitation, and energy completed and stimulate replication.	Ratio of overhead to grant/contracts is kept below x.	Financial audit.	
* (See energy, agriculture, and water supply and sanitation)			

Figure I-1 p. 4

PROGRAM DESIGN SUMMARY

NARRATIVE SUMMARY	OBJECTIVELY VERIFIABLE INDICATORS	MEANS OF VERIFICATION	IMPORTANT ASSUMPTIONS
Output	Magnitude of Output		Assumptions for Achieving Purpose
A. Appropriate Technology Program for Water and Sanitation.			
1. A demonstration project to provide water supply system to Santa Cruz campesinos implemented.	1. Ground water maps prepared by end of year 2. • By end of Year 2: well drillers trained, well rigs manufactured by local craftsmen, credit programs established, INGAVI well pump adapted • Drilling wells by private well drillers started for consumers by first half of Year 3.	1. Santa Cruz water table records at OCT. • Survey report of newly dug wells, hand pumps, and INGAVI well pumps in use.	1. Santa Cruz campesinos agree to participate. • Water table mapping technicians available. • Hand pumps, INGAVI well pump, and low-cost drilling methods usable.
2. A 1-year pilot program to introduce compost privies implemented.	2. Prototypes developed by end of first half of Year 2. • Promoters training module developed by beginning of Year 2. • Classes on composting conducted by end of first half of Year 2. • Training of promoters on proper use and maintenance of compost privies conducted by end of Year 2. • Project evaluation completed by end of first half of Year 3.	2. On-site survey report by technicians of compost privies in place by end of Year 2. • Promoters training manual on composting and use of privies. • Six-month participant-observation records of community use of privies.	2. Program is acceptable; and will be followed by dissemination of its results.

Figure I-1 p. 5

PROGRAM DESIGN SUMMARY

NARRATIVE SUMMARY	OBJECTIVELY VERIFIABLE INDICATORS	MEANS OF VERIFICATION	IMPORTANT ASSUMPTIONS
Outputs	Magnitude of Outputs		Assumptions for Achieving Outputs
B. ENERGY: A Programmatic Appropriate Technology Initiative			
1. Solar & wind energy data received.	1. Measure of wind and solar energy potential upgraded by end of year 2.	1. Reports from Ministry of Education, AASANA. SNMH processed data.	1. Run-of-wind odometer will be provided to trained data collectors. Collected data will be processed.
2. Wind prospecting accomplished.	2. 10 to 20 optimum wind sites positively identified by end of year 3.	2. Reports from INER.	2. Mobile wind-run anemometers and frequency distribution analyzers available.
3. Renewable energy information transferred.	3. Workshops and conferences conducted.	3. Meetings by OCT staff.	3. AT groups are interested in receiving information about renewable energy.
	• Technical information and construction booklets in Spanish provided to those adapting windmill prototypes and solar energy devices starting first half of Year 2.	• Conference and workshop documents.	• AT groups will participate in workshops and conferences.
4. Pilot projects to demonstrate use of energy device prototypes implemented.	4. Solar evaporative distillation device, solar cookers, and other specified energy device prototypes installed in selected institutions by second half of Year 3. Project evaluation accomplished by first half of Year 4.	4. Project evaluation reports.	4. Energy device prototypes can be produced in Bolivia.

Figure I-1 p. 6

PROGRAM DESIGN SUMMARY

NARRATIVE SUMMARY	OBJECTIVELY VERIFIABLE INDICATORS	MEANS OF VERIFICATION	IMPORTANT ASSUMPTIONS
Output	Magnitude of Output		Assumptions for Achieving Output
C. RURAL SMALL-SCALE INDUSTRY AND ARTISANRIES: A Programmatic Initiative			The program is financially feasible.
1. Pre-feasibility study phase			
• Existing plans for potential pilot industries surveyed.	• x plans surveyed and selected by last quarter of Year 1.	Reports of team which conducted the survey and selection process.	• Existing plans for potential pilot industries.
• Plans with best potential selected.	• x mini-industrial profiles prepared by end of Year 1.	" "	
• Communities selected for their potential as pilot WSME industries surveyed on site for social feasibility analyses.	• 3 communities selected by end of first quarter of Year 2.	" "	• Communities willing to participate.
• On site social feasibility studies for pilot industries of promising communities conducted.	• x market, technical, economic, and financial feasibility studies conducted by end of first half of Year 2.		• WSME model is viable in local contexts.
• Market, technical, economic, and financial feasibility studies conducted.			

Figure I-1 p. 7

PROGRAM DESIGN SUMMARY

NARRATIVE SUMMARY	OBJECTIVELY VERIFIABLE INDICATORS	MEANS OF VERIFICATION	IMPORTANT ASSUMPTIONS
Output	Magnitude of Output		Assumptions for Achieving Output
• Financial and organizational plans prepared	• Financial and organizational plan prepared by end of Year 1.	• Records of pilot industries.	
• Financing secured.	• Sufficient funds	• Bank/IFI agreements.	
2. Pre-implementation phase			
• Community members selected for technical skills and training.	• 30 individuals selected by first quarter of Year 2.	• Records of pilot industries.	• Community members will desire and will be available for training.
	• Technical skills training conducted by middle of Year 2.	• Training manuals.	
• Project monitors selected and trained.	• x project monitors trained by end of Year 2	• Training manuals. • Records of training sessions.	• Potential project monitors will be available for selection
• Social promoters selected and trained	• x promoters selected and trained by end of Year 2.	• Training manuals. • Reports from Trainers. • Observations of training session.	• Individuals desiring to be social promoters available.
• Staff of participating institutions trained.	• x training workshops for x staff members conducted by middle of Year 2.	• Reports from trainers and persons trained.	• Participating institutions will be willing to train staff.
• Systems for daily accounting, commercial and control requirements of WSME designed.	• Accounting systems designed by middle of Year 2.	• WSME accounting records.	• Design for systems for daily accounting and control requirements of WSME will be utilized.
• Pilot industry community baseline data collected	• 3 pilot community baseline data studies with demographic, social and economic data conducted by middle of Year 2.	• Report of project evaluation.	• Social scientist available for data collection and analyses.

Figure I-1 p. 8

PROGRAM DESIGN SUMMARY

NARRATIVE SUMMARY	OBJECTIVELY VERIFIABLE INDICATORS	MEANS OF VERIFICATION	IMPORTANT ASSUMPTIONS
Output	Magnitude of Output		Assumptions for Achieving Output
• Budget prepared for establishing central production facility, equipment, training of workers until self-sufficiency is achieved.	• 3 budgets and loan applications for start up industries tendered by middle of Year 2.	• Loan applications and supporting documentation.	• Program replicability will be assured. • Financial sources for pilot industry
• Loan applications made for 3 pilot industries.		" "	• Financial sources for pilot industry installation loans will approve loan applications.
• Consultants to install specific types of industries contracted.	• Implementation phase started by end of Year 2.	• On site visits. • Documentation of industry installation	• Specific industry consultants available.

Figure I-1 p. 9

PROGRAM DESIGN SUMMARY

NARRATIVE SUMMARY	OBJECTIVELY VERIFIABLE INDICATORS	MEANS OF VERIFICATION	IMPORTANT ASSUMPTIONS
Output	Magnitude of Output		Assumptions for Achieving Output
D. APPROPRIATE TECHNOLOGY PROGRAM IN AGRICULTURE			
1. Information on agricultural approaches, adaptations, field tests, pilot studies, and demonstration projects collected and disseminated.	1. x workshops and conferences conducted by beginning of Year 2. • Newsletters and special publications circulated by middle of Year 2.	1. Workshop and conference papers. • Newsletters and special publications.	1. Documents of approaches, adaptations, field tests, pilot studies, and demonstration projects in agriculture are available.
2. Grants and contracts awarded and the following projects managed: • agricultural AT implement and machinery prototype construction with local materials, field testing, and adaptation of AT implements. • Training courses for AT extension agents, agricultural engineering students, FOMO instructors, private voluntary organizations.	2. x grants and contracts awarded and projects managed beginning middle of Year 2. • x prototypes constructed; x% in field tests or atleast x% modified. • x courses given.	• Bank, OCT, AID, and awardees' records • Reports documenting prototype construction, testing and adaptation.	2. Grant funds available. • Grant application will be submitted. • Institutions are interested.

Figure I-1 p. 10

PROGRAM DESIGN SUMMARY

NARRATIVE SUMMARY	OBJECTIVELY VERIFIABLE INDICATORS	MEANS OF VERIFICATION	IMPORTANT ASSUMPTIONS
Output	Magnitude of Output		Assumptions for Achieving Output
• Development of models and module for campesinos training courses in pilot training program.	• Models and modules written for atleast 6 types of agriculture in Bolivia using tested AT.	• Center records.	• No "pet" solutions used, only tested technology, suggested.
• Studies in campesino communities documenting the experience of introducing AT.	• x% of campesinos satisfied with AT introduced. • Production raised.	• Agricultural specialist and social scientist visit sites and controls. (mini EOPS)	• Outside evaluators contracted and cooperate with staff.
• Village mechanics shop establishment for graduates of CIFEMA Village Mechanics Training Course.			

Figure I-1 p. 11

PROGRAM DESIGN SUMMARY

NARRATIVE SUMMARY	OBJECTIVELY VERIFIABLE INDICATORS	MEANS OF VERIFICATION	IMPORTANT ASSUMPTIONS
Output AT DOCUMENTATION CENTER	Magnitude of Output		Assumptions for Providing Output
1. AT Documentation Center at the UN library (or another parent library) established.	1. Advisors trained in subject development and catalogue accessing techniques at VITA before departure for Bolivia by middle of Year 1. • Deposit of documents of AT experience in Bolivia at Central Documentation Center begun by end of Year 1. • Collection of relevant AT documents in Spanish begun by end of Year 1. • Translation of AT materials to Spanish begun by middle of Year 2. • AT documents indexed and catalogued by end of Year 2. • Response to requests on AT begun by end of Year 2.	1. On site visit by Information Systems Specialist. • Response to inquiries with AT documents.	1. Need for AT Documentation Center recognized by Bolivians. • Sponsorship by Bolivian or international funding source will be assured for program continuation.

Figure I-1 p. 12

PROGRAM DESIGN SUMMARY

NARRATIVE SUMMARY	OBJECTIVELY VERIFIABLE INDICATORS	MEANS OF VERIFICATION	IMPORTANT ASSUMPTIONS
Inputs	Implementation Target		Assumptions for Providing Input
AID			
1. Long-term technical assistance: 1 Program administrator 1 Agriculture specialist 1 Energy specialist 1 Water & sanitation specialist 1 Small-scale industry specialist	1. • 4 work years program administrator • 8 work years specialists in agriculture, energy, water & sanitation, and small-scale industry.	• AID, UNDP, OCT records.	Funds available to finance the program.
2. Short-term technical assistance.	• BOPS & EOPS • On-site AT transfer.	• Reports submitted to AID • Brief reports of visits by consultants and by clients.	Continuing evaluation of program and its constituence sub-projects is required for quality control, feedback, and measurement of program success. Specialized expertise will be required from time to time.
3. Partial funding for counterpart personnel.		• AID/OCT records	GOB will provide counterpart funding.
4. Funds for small-grants program.	• Funds for small grants program.	• Record of funded project	
5. Vehicles.	• Vehicles		

Figure I-1 p. 13

PROGRAM DESIGN SUMMARY

NARRATIVE SUMMARY	OBJECTIVELY VERIFIABLE INDICATORS	MEANS OF VERIFICATION	IMPORTANT ASSUMPTIONS
Inputs	Implementation Target		Assumptions for Providing Inputs
GOB/UNDP OCT			
1. Counterpart of long-term technical assistance personnel.	1. 12 work years counterpart of long-term technical assistance personnel.	1. OCT/AID signed agreement.	• OCT or alternative institutions will provide technical assistance counterpart.
2. Support staff.	2. 3 work years documentation clerk 8 work years clerk-typist 2 work years translation (English to Spanish) 1 work year draftsperson	2. OCT personnel record.	• AID will provide counterpart funding.
3. Rural sociologist/social Scientist	3. 2 work years rural sociologist	3. Report of studies	
4. Partial funding for counterpart personnel.	4. Partial funding for counterpart personnel.		
5. Funds for small grants program.	5. Accessible funds.		
6. Vehicles.	6. Vehicles.		
7. Subsidized air fare.	7. Subsidized air fare.		
8. Work space and office communication equipment.	8. Work space and office equipment for each advisor, each counterpart and their support staff.		

REPORTS:

Chapter Three:	AGRICULTURE SECTOR: OVERVIEW
Chapter Four:	RURAL SMALL SCALE INDUSTRY AND ARTISANRY: OVERVIEW
Chapter Five:	RURAL WATER AND SANITATION SECTOR: OVERVIEW
Chapter Six:	ENERGY SECTOR: OVERVIEW
Chapter Seven:	INSTITUTIONAL SECTION

CHAPTER THREE: AGRICULTURE: SECTOR OVERVIEW

BACKGROUND

PHYSICAL GEOGRAPHY

Bolivia is located entirely within the tropics. However, differences in topography within the country give rise to a great variety of climates, from snow- and ice-capped mountain tops to low tropical wet and dry regions.

The southeastern region is dominated by the Andes, which transverse the country in a north-south direction cutting Bolivia into three distinct zones: the highlands, the lowlands and the transitional areas between them.

The most important area in the Andean region is the Altiplano, a high plateau which runs north to south and is flanked by the high Andes both east and west. This Altiplano is the traditional home of the native Andean Quechua and Aymara speaking populations, who form a majority of the Bolivian population. They have lived and farmed for thousands of years in this area with its generally harsh climate, sparse vegetation, low rainfall and low temperatures. In the northern region of Bolivia lie the valleys of the eastern slopes of the Andes, known as the Yungas, which are generally warm and subtropical and receive more rainfall than the higher elevations. The Valles are valleys which are less steep and contain broader basins than the Yungas, and are located adjacent to the southern and central Andean slopes. They descend gradually to the lowlands. The Oriente or eastern lowlands occupy about 70% of Bolivia's territory. It can be generally characterized as country with low elevations, and it varies from rain forest in the far north to pampas in the central area and dry savannas in the Bolivian Chaco in the south.

Agriculture in the high regions suffers from erosion, and in the eastern lowlands from slash and burn agriculture practiced by small farmers and overuse by agro-industry.

Bolivia is still largely forested, but deforestation has been a problem in the more heavily populated area for a long time, and slash and burn agriculture is increasing deforestation in many other areas.

POPULATION DISTRIBUTION

Population has traditionally been concentrated in the rather harsh and unproductive Altiplano, and in the steep valleys.

Development of agriculture in the more tropical regions in the Oriente is relatively recent, and large areas are still not developed or are underdeveloped.

Population density in the Altiplano was 8.03 per square kilometer, 8.82 per square kilometer in the Valles-Yungas region, and only 0.74 persons per square kilometer in the Oriente as of 1976.

LANDS AND SOIL

Bolivia has a land area of 1,098,000 square kilometers, of which only about 29,000 or 2.62% are cultivated. Table III-1 gives the overall land use or surface cover for Bolivia. Table III-2 gives the breakdown of cultivated land by departments.

Resource surveys of Bolivia are scarce. No country-wide soil survey has ever been undertaken. Even in agricultural areas soil maps and soil fertility information exist only for very limited areas, even within currently cultivated zones.

Table III-3 gives a summary of the Bolivian soil resources as they appear on the "FAO Soils Maps of the World." This soils classification is largely extrapolated from what little information is available directly from Bolivia and from analog soils in other parts of the world. Although the FAO classification should be considered as a rough approximation, it indicates that soils in about half of Bolivia are available for some kind of agriculturally productive use other than forestry. Some soils are found to be potentially productive but are located on slopes which are too steep for use in most forms of agriculture. Even assuming this, it shows that a tremendous expansion of the area now under cultivation would be possible.

The 2.62% figure (percent of total land area cultivated) is the result of the analysis of earth satellite data, and there are many people in Bolivia who consider even this figure too high. A tabulation of lands potentially available for expansion is given in Table III-4. These data cover 788,800 square kilometers or about 72% of the country. This tabulation covers the humid tropical parts of Bolivia, which are the target of most development efforts, and are where most of the colonization is taking place.

FORESTS AND VEGETATION

In the Altiplano, few native trees exist. Some willows and introduced eucalyptus can be found near La Paz. Totora reeds on the Lake Titicaca shore are used to construct balsa boats. Ichu or paja brava (savage grass) serves as forage for llamas and for making thatch for houses. Tola and g'uta are used for fuels. Specific use of natural vegetation by rural peoples in the high semi-arid and desert area of the southern Altiplano can be found in AMARU, IV, 1979.

In the Yungas, there are general mountain rain forest conditions prevailing. Species of mahogany, cedar, walnut, laurel, lignum vitae, ceiba, and dyewoods are present in greater and lesser numbers. At lower elevations, palms are present. Cinchona trees, once present, have been over exploited as the source of quinine. Other important species include vanilla, saffron, and vica (a source of tannin). This zone also supports the coca plant (Erthoxylon coca). The Valles in the south support grasses and occasional stunted trees. The valleys and basins are covered by xerophytic shrubs and small trees. Semi-deciduous forest occurs in the easternmost areas from Santa Cruz to the Argentine border, and includes species of walnut and quebracho.

The northern Oriente contains an evergreen forest supporting an estimated 300 species of hard woods and yields mahogany, rubber, quinine, almonds, and Brazil nuts.

The southeastern Oriente and western Santa Cruz lowlands support a semi-deciduous tropical forest with vegetation intermediate between rainforest and the dry forest of the Chaco further to the south. The woodlands alternate with natural grasslands

Table III-1
Overall Land Use or Surface Cover for Bolivia

BOLIVIA - MAJOR TYPES OF SURFACE COVER OR LAND USE

SURFACE COVER	AREA	
	km^2	%
Pasture and brush	338,307	30.81
Forest	564,684	51.40
Cultivated land	28,794	2.62
Wet lands	24,201	2.20
Water	14,197	1.29
Wastelands	126,101	11.47
Permanent glaciers and ice	2,148	.20
Urban, built up, roads, etc.	149	.01
TOTAL	1,098,581	100.00

SOURCE: Mapa de Cobertura y Uso Actual de la Tierra - Bolivia
Series Sensores Remotos, August 2, 1978, Geobol
C. E. Brockmann

Table III-2
Cultivated Land By Department

BOLIVIA - CULTIVATED LAND BY DEPARTMENTS

DEPARTMENT	AREA	
	km^2	%
Beni	189	.08
Cochabamba	1,822	3.27
Chuquisaca	1,313	2.54
La Paz	14,522	10.64
Oruro	1,093	2.04
Pando	223	.15
Potosí	1,247	1.05
Santa Cruz	6,982	1.88
Tarija	1,408	3.75
TOTAL	28,794	

SOURCE: Mapa de Cobertura y Uso Actual de la Tierra - Bolivia
Series Sensores Remotos, August 2, 1978, Geobol
C. E. Brockmann

Table -3
Summary of Bolivian Soil Resources

SUMMARY OF BOLIVIAN SOIL RESOURCES

FAO CLASSIFICATION	EXTENT km^2	LAND AREA %	TERRAIN TEXTURE	NATURAL VEGETATION	AGRICULTURAL SUITABILITY TRADITIONAL	AGRICULTURAL SUITABILITY IMPROVED
Acrisols	283,960	26.0	-			
Orthic	144,070	-	mostly level medium fine	mostly wet, tropical forest	low fertility	fertility can be improved, but erosion problem. Little mechanization possible,
Plinthic	139,890	-		tropical forest	grazing but low fertility	mostly grassland, but also rice, jute, rubber. Drainage problems, hardpan.
Lithosols	243,860	22.9	strongly dissected mountains	some montane rain forest-some montane grassland and tundra paramour	idle-some grazing	forestry, wildlife, recreation
Luvisols	133,600	12.2				
Chromic	30,520	-	dissected mountainous	montane evergreen, Chaco woodlands, dry forest, xerophytic woodland, grassland	in drier Andean valleys, potatoes corn, wheat, vegetables, oats, fruits, alfalfa, grass for milk and meat animals. Erosion problems, moisture limitations.	fertilizer and irrigation can increase crop yields. Mechanization very limited, erosion control needed.
Ferric	48,990		level, medium to fine	tropical, deciduous and semi-deciduous forest	mostly grazing medium to high fertility	need fertilizer for better production. Erosion and drainage problems occur.
Planosols	83,260	7.8				
Entric	43,240		level	wet palm savana, campo cerrado	Inundated during part of the year. Can be used for rice, sugar-cane grazing. Have impervious layer. Good for irrigated rice, if good quality water is available.	
Mollic	40,010		level medium	savana, swamp trop, deciduous and semi-deciduous forest		
Xerosols	80,700	7.6	mostly level	montane and altiplano steppe, some Xerophitic deciduous forest (3,700 km^2 with salinity)	Extensive grazing. A few adapted short season crops, but unreliable rainfall. Irrigation difficult because of restrictive poor drainage and soluble salts.	
Cambisols	51,600	4.8				
Dystric	39,800	-	some level	tropical seasonal forest	Pasture and forest. Low fertility. Slopes shallow soil, stoniness.	
Calcic	11,800		undulating mountainous	upper mountain grassland, cactus		
Gleysols	47,210		level	swamp forest	Grazing. Some rice cultivation. Drainage problems. Under improved management usable for a number of crops.	
Kastonozems	33,610	3.2	mostly level	Xerophitic woodland, some rolling Altiplano steppe.	Extensive grazing. Marginal yields under dry farming. Seasonal water deficiency. Irrigation possible if good water available. Some drainage problems.	
Yermosols	24,120	2.3	level	desert tundra mountain desert.	Lack water. Not suitable for agriculture. A little is irrigated.	
Andosols	22,030	2.1	mostly level	Altiplano steppe	Difficult to farm. High acidity, phosphate fixation. Erosion.	
Regosols	21,730	2.0	some mountanous, mostly level	tropical evergreen forest, savana with palms and shrubs		
Various		3.6			None areas suitable for crop production.	

SOURCE: "FAO-SOIL MAP OF THE WORLD" as reported in Environmental Report (Draft) Science and Technology Division, Library of Congress.

Table III-4

BOLIVIA - SOIL AREAS ACCORDING TO SUITABILITY IN HUMID TROPICAL ZONE

CROPPING	AREA km2 (000)	HTL* %	TOTAL+ %
ALLUVIAL (developed from recent deposits and located in flood plains and deltas)	27	3.4	2.5
HYDROMORPHIC (on flat or depressed landscapes where lack of runoff possibility creates a drainage problem)	108	13.7	9.8
GOOD LAND (undulating or level topography, well drained, not susceptible to serious erosion, medium to high fertility)	6	0.07	0.05
MARGINAL TO LOW FERTILITY (upland type but with very low natural fertility; with appropriate crops and fertilizers, reasonable yields may be expected)	123	15.6	11.2
MARGINAL SHALLOW OR STEEP (special problems due to shallowness or slope, heavy texture or sandiness; they occur primarily in highland areas and are susceptible to severe erosion)	22	2.8	2.0
TOTAL CROPPING LAND:	266	33.8	24.2
PASTURE, PLANTATIONS, FORESTRY OR RESERVE (soils unsuited to normal crop production because of major limiting factors such as steep topography, poor drainage, low fertility, sandiness, heavy texture, and rock outcrops or stones)	522	66.2	47.5
* TOTAL HUMID TROPICAL LANDS:	788	100.2	71.8
+ TOTAL OF BOLIVIA			

SOURCE: Nelson Michael. 1973. The Development of Tropical Lands: Policy Issues Latin America. Baltimore: John Hopkins University Press/ Resources for the Future.

and low vegetation. Lower tropical grasses, palms, and heavier tropical woodlands are found in the plains of Moxos, an area of low-lying basins which is flooded during the rainy season. The Chaco lies south of the Santa Cruz plains. In that region, dry forest with quebracho trees, thin shrub and cacti grow. There are also some areas with stunted and coarse savanna grassland. Palms are found in moist areas.

For an excellent and amplified discussion of forests and vegetation in Bolivia, see Freeman et. al., 1979.

WATER RESOURCES

Taken as a whole, Bolivia has abundant water resources, but these are not evenly distributed throughout the country. The areas of greatest rainfall are the sparsely populated subtropical zone and the northern plains. These areas have critical excesses of water arising chiefly from seasonal flooding. The flooding of the Beni plains of northern Bolivia, for example, severely limits the otherwise great potential of that area for cattle grazing. Other areas receive as little as 50 mm per year. Major portions of the Altiplano have critical shortages considering the requirements of the large concentrations of human and animal populations and the needs of mining operations for water. Another area of water shortage is the Chaco of southern Bolivia, where increased water supplies could greatly enhance the grazing potential.

For an excellent and amplified discussion of watershed conditions and development see Freeman et.al., 1979.

RAINFALL AND CLIMATE

The varied topography of Bolivia leads to the existence of several climatic regimes, conditioned for the most part by altitude. At the highest point is the tierra nevada (snowy land) which has snow-covered mountains rising over 5,000 meters above sea level.

The Altiplano is the plateau between the peaks of the Andes, known as the tierra fria (cold land), and lies at an altitude of 3,000 to 4,000 meters. Yearly average temperatures do not exceed 10 degrees centrigrade, and rainfall is sparse. The dry season in this area lasts from four to seven months and, in many years, no rainfall may be recorded in the driest months of June and July. Contrast between day and night temperatures ranges between freezing and up to 26°C.

The tierra templada (warm land) is found in the deep cut valleys of the Yungas and the flatter basins of the Valles. This area ranges in elevation from 300 to 2,800 meters. It is a warm, humid subtropical climate with average temperatures of up to 18 degrees centrigrade, and annual precipitation of over 1,300 mm in the areas of heaviest rainfall. Dry season in this area most typically ranges from four to seven months.

The last great climate region is the tierra caliente (hot land) which lies in the eastern sector of the Oriente (eastern lowlands) where temperatures range from an average of 25 degrees centigrade in the north to 27 degrees centigrade in the south. Precipitation in this region is highest in the north where about 2,000 mm per year fall. Precipitation decreases toward the Gran Chaco region of the south. Although rainfall is lowest

during the period of June and July, there are seldom more than two months which could be called dry. Map III-1 displays average annual rainfall.

BOLIVIAN AGRICULTURE

Bolivian agriculture occupies as much as 70% of the population but provides only about 15.3% of the nation's Gross Domestic Product. By some estimates, about 7.8% of Bolivia's land can be classified as prime agricultural land, but less than half of this has actually produced crops. Of the land actually in the production process, only about 12% is normally under cultivation. The remainder, in accordance with the traditional crop rotation system practices in the Altiplano, is lying fallow. Agriculture practices tend to use traditional technology. Furthermore, most of the agriculture population is crowded in the less productive highlands of the Altiplano, Yungas and Valles, where the soils are poor and land is limed. Rural families typically cultivate only one to two hectares of land and derive income primarily from potatoes, barley, wheat, rice, vegetables and coca. The small farm sector has accounted for as much as 80% of farm production and has occupied as much as 95% of the rural population. For more information, see the draft Environmental Report on Bolivia by the Science and Technology Division of the Library of Congress, June 1979.

In the post-agrarian reform era, small-scale enterprises concentrated in the highlands. The more commercial agricultural enterprises with relatively large-sized holdings are found in the Santa Cruz and Beni regions of the Oriente and involve less than 5% of the rural population. Whereas the small farm sector relies heavily on human labor for all aspects of production, the large farm sector employs more mechanization, especially in the agro-industrial production of cotton and suger cane in Santa Cruz.

Crops in Different Agricultural Regions

The most important crops in northern Altiplano include: potatoes; barley; quinua (a native cereal); legumes, including peas, vetch and broadbeans; onions and other vegetables; and forages such as alfalfa. In the colder, drier, central Altiplano, where livestock is the principal agricultural product, subsistence cropping includes barley and quinua, which are also fed to sheep. In the southern Altiplano, livestock production is once more the principal agricultural activity. Crops grown include corn, wheat, broad beans, potatoes, squash, oca, quinua, onions, carrots and beets.(For additional information on highland crops, see AMARU IV, 1979, pp.32ff.)

The steep subtropical valleys of the Yungas produce a variety of crops, the most important of which include coffee, coca, citrus and bananas. The chief crops of the Valles regions include potatoes, corn, wheat, barley, grapes and deciduous fruits.

The different zones of the vast Oriente yield varying agricultural products. In the northern tropical forest zone, gathering of wild products such as rubber and nuts are the most important activities, while on the Beni plains to the south of this zone, cattle are the principal product. Extending to the north from the general vicinity of the city of Santa Cruz, in an area defined by the Rio Chapare in the department of Cochabamba and the Rio Grande in the department of Santa Cruz, lies the most recently developed agricultural region of Bolivia. Important products include corn, rice, yuca (sweet manioc), sweet potato, peanuts, frejol beans, citrus, soybeans, sunflower and hot peppers as well as crops important for their export value: cotton and sugar cane.

Map III-1
Bolivia-Average Annual Rainfall

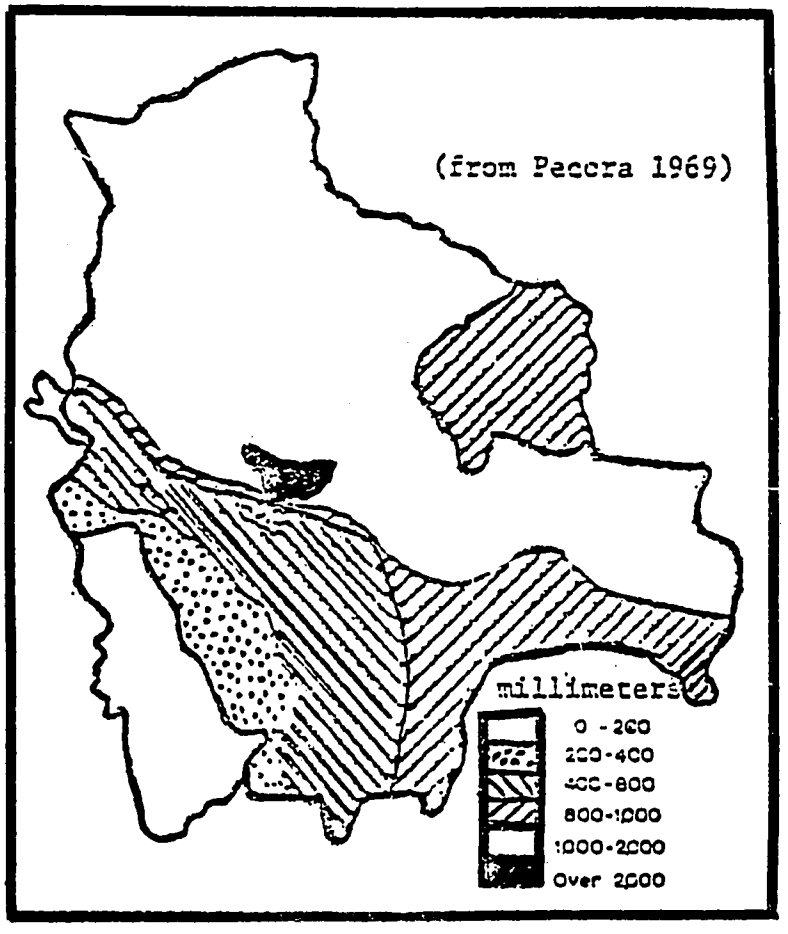

Tree crops from this region include coffee, cocoa, orange, lime, mandarin, lemon, grapefruit, mango, tamarind, avocado, papaya, urucu, achachairu, chirimoya, ocuro, guapuru, guayaba, guayabilla and pineapples. Vegetables grown include onions, tomatoes and lettuce.

Crop Quantities and Markets

Corn occupies the largest amount of land of any given crop (about 243,500 hectares in 1977); significant amounts of land are also planted in potatoes (125,515 hectares), barley (111,920 hectares), wheat (73,415 hectares), rice (62,915 hectares) and vegetables (38,250 hectares).

In terms of production value, potatoes, vegetables (including sweet corn, onions, tomatoes and green peas) and corn have been the most important crops. These and most other Bolivian crops are produced to satisfy subsistence needs of the small farmers and only if there is a surplus production will products be made available for urban markets.

Bolivia's chief export crops are cotton and coffee, both of which have increased in production since the early 1960s. Sugar cane production also showed considerable growth over the same time period and is exported to a lesser extent. Increased production of sugar cane and rice has been important in allowing Bolivia to be self-sufficient in these products and to save needed foreign exchange previously spent importing these commodities. Cotton, coffee, sugar cane and rice have received extensive financial backing from the public and private sectors of the Bolivian economy. More traditional Bolivian agricultural products, particularly those from the Altiplano and the Valles have not received similar financial backing.

Livestock

Livestock plays an important role in the agricultural sector of Bolivia. Large portions of the country are really only suitable for grazing and pasturage.

Cattle production is important in the northern Altiplano, especially in the region of Lake Titicaca. Sheep are raised in the plains, while llama and alpaca are kept in the higher, colder mountain regions. Farm families also raise chickens, rabbits and guinea pigs for meat. In the colder, drier sections of the central and southern Altiplano sheep, alpaca and llama are of greatest importance, although cattle are also prominent in the central region.

Goats are raised in the Yungas, while in the Valles there are dairy cattle, poultry, pigs and goats.

Beef cattle are the most important product of the Oriente. The greatest concentrations of these animals are found in the Beni Plains and in Santa Cruz. Cattle are raised mostly under native range conditions without supplemental feeding. The poultry industry is also of great importance in Santa Cruz. Among settlers in colonization zones, chickens and pigs are the most commonly kept animals.

Livestock production is primarily a subsistence activity. Most small farmers hold some livestock. Livestock numbers tend to be large in relation to the carrying capacity of grazing land, especially in the sparsely vegetated Altiplano. This results not only

in overgrazing, with its adverse environmental effects, but also in a lowering of the quality of livestock. Lack of feed for dairy animals, which tend to be concentrated in the Cochabamba Valley, has limited the expansion of the dairy industry.

Cameloids are of particular interest here as they are the object of activities of much of the rural population. There are about 2,000,000 llamas in Bolivia, each of which produces about one kilogram of wool. There is a potential production of 2,000 tons. Of this amount, the Instituto Nacional de Fomento Lanero (INFOL, National Institute for the Development of Wool) gets 60 tons, and others get 140 tons. Commercial production, thus, is only 200 tons or 10% of the potential production. The rest of the wool is assumed to be distributed as follows: 60% is not sheared (due to traditional beliefs and other reasons); 25% is consumed in campesino use; and 15% is smuggled across the international borders (80% to Peru and 15% to Chile and Argentina).

Alpacas number about 316,000 animals, with a potential production of 180 tons of wool. INFOL gets 40 tons of this amount while others get 100 tons. The total commercial production is 140 tons. All potential production will be converted into commercial in ten years, according to estimates. Llamas produce a coarse fiber (called pig type) and a fine fiber. The fine fiber is considered to be of better quality than alpaca wool.

The carrying capacity for llamas is one animal per 10 hectares of land. Bolivia, therefore, needs 200,000 sqare kilometers to graze properly its llama flocks. Estimates of per animal consumption are: sheep require 500 kilograms of dry material per year; llamas require 750 kilograms of dry material per year.

Research in llama physiology, particularly in relation to reproduction, is an area of great need.

Milk from llamas and alpacas is only used for feeding small animals. Cameloid milk does not seem to be an ingredient of the campesino diet. Llama and alpaca meat is most often sold to obtain grain as a staple in the diet. Skins of the cameloids have a commercial potential but this has only recently been exploited in Bolivia.

IRRIGATION

Irrigation is playing an increasingly important role in agriculture. Bolivian Government development plans call for irrigation schemes of varying sizes.

Recent estimates place the total amount of irrigated land at 120,000 hectares, or about 3.6% of the land currently devoted to permanent or harvested crops.

AQUACULTURE

The potential for aquaculture in the Santa Cruz and Alto Beni regions of Bolivia was treated in a related AID report: Lovshin 1977 (AID control #PN-AAF-105) performed under contract CSD-2780 211(d).

INSTITUTIONS

There are many institutions involved with agriculture and livestock-raising in Bolivia. They will be grouped in the following manner: Government agencies, parastatal organizations, municipal agencies, international agencies, educational institutions, private voluntary organizations, private religious groups, department development corporations, commercial outlets, and non-profit national organizations. For more information, see Institution section below.

GOVERNMENT AGENCIES

The Ministerio de Asuntos Campesinos y Agropecuarias (MACA, Ministry for Campesino Affairs and Agriculture) is the principal government agency which is charged with the monitoring and development of agriculture and livestock raising in Bolivia. However, it is really an umbrella organization with many loosely connected parts. Of most relevance to this discussion are the following parts of MACA:

- Instituto Boliviano de Tecnologia Agropecuaria (IBTA, Bolivian Institute of Agricultural Technology)
- Centro de Investigaciones de Agricultura Tropical (CIAT, Center for the Study of Tropical Agriculture)
- Servicio Nacional de Desarollo de Comunidades (SNDC, National Community Development Service)
- Biblioteca Nacional Agropecuaria (National Agricultural Library)
- Direccion Departmental de Riego (Regional Irrigation Department)
- Instituto Nacional de Colonizacion (INC, National Colonization Institute)

IBTA and CIAT are the primary extension and research institutions in Bolivia. IBTA works in all departments except Santa Cruz. CIAT works in Santa Cruz. IBTA presently is in a period of expansion in the number and areal coverage of its extension agencies. IBTA research stations are involved in work on highland, valley, and lowland agricultural and livestock raising research. CIAT is autonomous from, but works with IBTA at the national level. CIAT has carried out a great deal of research in tropical agriculture, but has done little in extension in the past.

While both agencies provide potential for advances in the state of Bolivian agriculture, IBTA is the better of the two if considerations of effective and meaningful commitment to extension and community participation are foremost.

SNDC is a coordinating agency which works to bring social services and infrastructure to rural areas in Bolivia. The only work it does in relation to agriculture is in coordinating irrigation projects.

Parastatal Organizations

The Instituto Nacional de Fomento Lanero (INFOL, National Institute for the Development of Wool) has as its main objective to support the wool textile industry and to promote integrated rural development where alpaca, llama, and vicuna wool are produced. This agency is the most important entity in relation to cameloid development in the highlands.

Department Development Corporations

The Corporacion de Desarrollo de Cochabamba (CORDECO, Department Development Corporation of Cochabamba) is an important agency in relation to efforts to improve and extend small irrigation schemes in the department of Cochabamba.

The Corporacion Regional de Desarrollo de Santa Cruz (CORDECRUZ, Regional Development for Santa Cruz) has programs in coffee production, cattle farms, improved seed trials, diary farm experimentation, improved potato varieties, increase in fruit production, construction of grain silos, the introduction of silviculture, and in experimentation and extension of animal traction.

EDUCATIONAL INSTITUTIONS

The Instituto de Investigaciones Fisicas of the Universidad Mayor de San Andes Institute of Physics Research, San Andres University has a project which could be of some importance to agriculture. This is a prototype greenhouse constructed of plastic. It could be important for highlands rural populations.

The Centro de Investigacion, Formacion, y Extension en Mecanizacion Agricola (CIFEMA, Center for Research, Training, and Extension in Agricultural Mechanization) is a project of the Faculty of Agriculture of the Universidad Mayor de San Simon of Cochabamba and the Technical Cooperation Department of the Swiss Government (COTESU). The CIFEMA school has a course to train agricultural mechanics, to teach tractor driving, and to train in blacksmithing.

The Universidad Mayor de San Simon in Cochabamba has a large faculty in fields of research and teaching related to agriculture including: agricultural engineering (soils and irrigation), plant science, animal sciences, rural development, food technology, and agronomy (crop production). The faculty's interests were judged to be largely related to agriculture and forestry in Santa Cruz and Tarija.

The Extension Universitaria of the Universidad Mayor de San Simon in Cochabamba has training courses for craft and technical workers. It has done little in agriculture as yet, but is planning cooperation with CIFEMA in the future in its tractor driver courses.

INTERNATIONAL ORGANIZATIONS

The Proyecto Agrobiologia Cochabamba (Cochabamba Agrobiology Project) is financed by the Swiss Foundation "Pro-Bolivia". Their work is related to improved use of manure, multiple cropping, and the use of improved pasture grasses.

The National Agricultural Library is a good resource base on a number of areas in relation to agriculture and livestock raising.

The Regional Irrigation Department is an umbrella organization itself in the department of Cochabamba which includes: a program with assistance from FAO and GEOBOL, Oficina de Desarrollo de Comunidades, Corporacion de Desarrollo de Cochabamba (CORDECO, Department Development Corporation of Cochabamba).

Departmento de Micro-riego (Department of Micro Irrigation Projects, Office of the Prefect of Cochabamba), and the Irrigation Section of the Faculty of Agriculture of the Universidad Mayor de San Simon work in relation to agriculture in the management of several large irrigation projects.

The INC is the governmental agency charged with the promotion and management of the opening of previously unutilized and underutilized land to agricultural and livestock raising exploitation. Current work is concentrated in the Chapare and northern Santa Cruz areas. Most important of this work is the effort to develop a rural education training institute in the Chapare and the effort in settler consolidation in the area of the San Julian Project.

The Ministerio de Trabajo y Desarrollo Laboral (Ministery of Labor) has as one segment of its operations the Fomento de Mano de Obra (FOMO, National Services for Labor Training). In cooperation with CIAT in Santa Cruz, FOMO provides instruction and training in cattle raising, pomology, and vegetables. FOMO does work in the fields of industry and health.

The Ministerio de Planeamiento y Coordinacion (Ministry of Planning and Coordination) has several units within its organization which do and could have an impact on agriculture. The Oficina de Ciencia y Tecnologia (OCT, Office of Science and Technology) has the personnel and potential to coordinate appropriate technology efforts between agencies. The Direccion de Planeamiento y Politica Social Global (DISOG, Department for Planning of Overall Social Policy) has carried out some research on a national scale and could contribute further in that way. The Desarrollo de Comunidad Integral (DCI, Department of Integrated Community Development) is committed to research and planning for the rural sector.

In the Ministerio de Energia e Hidrocarburos (Ministry of Energy and Hydrocarbons) the Direccion Nacional de Meterologia e Hidrologia (DNMH, National Service for Meteorology and Hydrology) gathers meteorological data. This has not been applied comprehensively to agricultural planning, but there are potential applications of great importance.

The Servicio Geologico de Bolivia, Programs de Satelite Tecnologico de Recursos Naturales (GEOBOL-ERTS, Geological Services of Bolivia, Earth Satellite Program for the Study of Natural Resources) has produced maps which in comprehensive detailed manner survey the natural resources of Bolivia.

This work could have an important impact on agricultural planning in the future.

The Instituto Interamericano de Ciencias Agricolas (IICA, Inter-American Institute of Agricultural Sciences) is involved in a project with IBTA in the development of Andean crops and in the industrialization of quinua. It also assists other IBTA Agriculture Experiment Stations in the Altiplano.

The American Institute for Free Labor Development (AIFLD) is primarily an educational and organizational institution involved with campesino and worker cooperatives. However, it does have ties in the field with small farmers through support of the Federacion Nacional de Cooperativas Arroceras (FENCA, National Federation of Rice Growers Cooperatives).

The International Voluntary Service (IVS) has a project in the improvement of cameloid stock and pasture for these animals in the northern Altiplano.

The Banco Interamericano de Desarrollo (BID, Inter-American Development Bank) supports the efforts of IBTA in its various Agriculture Experiment Stations, provides loans for the purchase of simple tools and improved seed varieties, and supports the procurement of expert advice on agricultural development. The IBTA support is focused primarily in the highlands, and the loans and advice are provided to areas in the lowlands including the Alto Beni, Rurrenabaque, Yapacani, and Chiquiaca Redonda.

The World Bank is involved in agricultural and livestock-raising projects in several areas. These include the Ingavi Integrated Rural Development Project, Omasuyos-Los Andes Rural Development Project, Beni and Santa Cruz Livestock Improvement Project, San Julian Rural Development Project, Irrigation Projects at Rositas and San Jacinto, and in various agricultural credit projects. It is considering financing a livestock improvement project in Oruro and a settlement consolidation project in San Julian.

Plan de Padrinos (Foster Parents Plan) has just recently initiated its first rural effort in the formation of a cooperative at Tambillo in the Altiplano. It may be of some importance if it grows.

NATIONAL NON-PROFIT INSTITUTION

The Centro para el Desarrollo Social y Economico (DESEC, Center for Social and Economic Development) has several component units with a great deal of involvement in agriculture. Accion Rural Agricola de Desarrollo Organizado (ARADO, Action for Organized Rural Development) is an organization at the grassroots of rural areas and the Asociacion de Servicios Artesanales y Rurales (ASAR, Association of Artisan and Rural Services) is an organization which supports agricultural improvement in the highlands and lowlands. ARADO provides credits to its members for seed, pesticide, fertilizer, and/or technical assistance. ASAR provides services such as mechanization and variety improvement in the highlands and the lowlands.

NON-PROFIT ORGANIZATIONS AND PRIVATE VOLUNTARY ORGANIZATIONS

The Comite Central Menonita (CCM, Mennonite Central Committee) has several efforts in AT, all of which involve agriculture in the lowlands. They operate a demonstration and training farm near the city of Santa Cruz, sell animal traction equipment and assist in its ongoing maintenance, have designed and sell a simple plow with a harness attachment , and they promote the use of improved seed varieties and strategies of

crop rotation, including tree and pasture crops.

The Mennonite Colonies are agricultural settlements founded by migrants from various countries who share the Mennonite faith and culture. Their existence is centered on the use of appropriate agricultural technology. They employ windmills, animal traction, crop rotation, simple cheese making, and other items of appropriate technology. However, there exists a distance between these farmers and the general Bolivian population which is often difficult to bridge.

The Mennonite Economic Development Associates, Inc. is an organization which offers economic assistance to small farmers in several colonization zones in the department of Santa Cruz including San Julian, El Progreso, La Torno, and Tres Palmas. The loans are mostly for the introduction of animal traction and improved seed varieties.

The Centro de Investigación y Promoción de Campesinado (CIPCA, Center for the Research and Advancement of the Peasantry) is an organization with a wide outreach to rural communities in the highlands (particularly north of La Paz), the Alto Beni, and in Santa Cruz. In relation to agriculture, CIPCA has focussed on educational materials in native Andean languages. Such publications cover potato, onion, and coffee cultivation. "Radio school" programs also cover subjects such as the selection of seed for improved cropping.

Acción Cultural Loyola (ACLO, Loyola Cultural Action Group) is a social action and educational organization working in the southern departments of the Altiplano and Valles. Like CIPCA, ACLO focusses on the dissemination of information about agricultural improvement, among other topics. They also manage areas of demonstration of improved agricultural techniques.

The Methodist Evangelical Mission in Santa Cruz is involved in the promotion of winged beans as an item for crop diversification and for food. They also are the Bolivian representatives of the Heifer Project International which distributes milk cows and receives back the first offspring.

The Catholic Relief Service (CARITAS) has worked in agriculture in tomato and onion cash cropping in Cochabamba. It is also involved in social promotion and cooperative formation.

ASEC is a religious organization which works in the La Paz department in crop improvement extension programs including corn and potatoes in the higher elevations, and coffee, cacao, rice, yuca, bananas, and plantains in lower elevations. It also is linked with the Heifer Project International.

The Fundación Integral de Desarrollo (FIDES, Integral Development Foundation) is a recently formed organization consisting of persons who have worked in agricultural development in the northern Santa Cruz colonization zone for up to twenty years. The organization now is managing a pilot integrated development project aimed at providing the means for the migrant small farmer to diversify and intensify his agricultural and livestock raising efforts, in order to occupy the colonization zones of San Julian and those located between Chane and Piray on the road north of Montero in the department of Santa Cruz. Efforts include those in demonstration farms for diversification and animal traction, formation and management of consumer cooperatives and outlets for farm machinery and seed, credit in support of innovation testing, organization of cooperative marketing, and the promotion of planting of windbreaks.

PRIVATE BUSINESSES

Metisa Bovia, Ltda. is a commercial hardware manufacturing company near Santa Cruz. They make a variety of hand tools from imported steel using local wood for handles.

ISSUES

LACK OF SOIL INFORMATION

Soil fertility information is lacking in Bolivia. Most experimental work at the Agricultural Experiment Stations of the Instituto Boliviano de Tecnologia Agropecuaria (IBTA-Institute of Agricultural Technology) seems concerned with variety of trials and pest control. There is little research on soil fertility or fertilizer use, and little done on the use of green manure, or improved crop rotations. There are a number of soils laboratories located at IBTA stations and at the agricultural faculties at the universities. These laboratories are in different stages of development. However, with the possible exception of the station near La Paz, which was not visited, no laboratory is functional in spite of technical assistance from members of the Canadian International Development Association (CIDA) team. It is unfortunate that despite many years of USAID efforts in this field, such as the support of the International Soil Testing Program in neighboring countries and throughout most of Latin America, very little has been accomplished in Bolivia. A basic inventory of soil types, knowledge, fertility, green manure, crop rotations, and barnyard manure utilization can all be considered soft AT and is appropriate technology to many agronomists. Such knowledge is essential to a good crop production program. Development of this capacity has a clear priority over an AT hardware program.

Soils laboratories throughout the country should be equipped to perform standard analyses. In addition, at least one laboratory in the country should be programmed to perform soil-water analysis for metals like lead, tin, antimony, tungsten, silver, gold, etc. In a mining country like Bolivia, some of these metals may occur naturally, and do very likely occur in many places as pollution from mining operations, especially in surface waters. Some of these metals may be affecting crop production in a number of ways, in relation to both yield and quality of crops. They also may affect human health.

LIMITS OF AGRICULTURE

Agriculture production is limited by several factors. In the Altiplano, eroded and depleted soils are an important limiting factor along with low rainfall and the risk of frosts. Due to the high erodibility of soils, terracing is the preferred technology for working of slopes, but this requires a heavy degree of labor organization and input which is labor intense for small farmers. (See AMARU IV, 1979 on this topic). Although climatic conditions are more favorable in the Yungas, the slope of the land means that the proper management practice of terracing, which is difficult for small farmers to achieve, is not carried out and rapid erosion and soil depletion result. In the Valles, centuries of farming have also led to the depletion of the soils and to erosion.

In the Oriente, the greater portion of the land is considered to be more suitable for pasture or forest than for crop production. Flooding and poor soil drainage limit agricultural production, especially in the northern areas, while wind erosion is a major problem

in the agricultural areas to the immediate north and south of Santa Cruz.

Traditional farming methods also constrain agricultural production. The wooden plow is still the principal tool of the Altiplano, seeds are generally sown by hand, animal manure, while often used for fertilizer is more commonly used for fuel, and commercial fertilizers are generally too expensive for the rural subsistence farmer. Crop rotation is generally the only conservation method employed by small farmers.

Principally because of inefficient methods, domestic food production has increased only two percent per year, whereas demand for food has increased about four percent.

ADVERSE ENVIRONMENTAL EFFECTS OF AGRICULTURE

The farming of land which, as is often the case in Bolivia, is highly subject to erosion because of the nature of the soil or the steepness of slopes, requires a level of agriculture technology usually beyond that of the Bolivian farmer. Inadequate management therefore leads to depletion of soils and to erosion.

Slash and burn agriculture is practiced among most small farmers in the new settlement zones of the Alto Beni, Chapare, and Santa Cruz. It leads to both abandonment of land due to declining fertility and to weed incursion, and to erosion problems. It is also a cause of deforestation. Small farmers typically clear land, burn felled tree trunks and cut brush in the process, work the land for from three to five years until its fertility declines and weed growth increases dramatically, and then abandon it in order to clear new land, move into a city, or move back to their place of origin. Given the present technological and economic conditions, and the availability of land, slash and burn agriculture by abandonment is a rational use of strategic resources by the migrant small farmer. The requirement to change the pattern is the supplying of the means to change the pattern, and make rational the use of resources which sustains or improves their yield.

Massive clearing of forest and secondary growth for large scale grazing and crop production by agro-industry are also major causes of deforestation and the decline in environmental quality in the Oriente.

ADVERSE ENVIRONMENTAL EFFECTS OF LIVESTOCK PRODUCTION

Overgrazing of livestock is one of the principal causes contributing to soil erosion in Bolivia. The problem is particularly severe in the Altiplano where large numbers of sheep have stripped the vegetation cover and compacted the soil. The Yungas and Valles also suffer from overgrazing, with goats said to be the chief culprits in Cochabamba, Chuquisaca and Tarija. Small farmers grazing their animals on communally owned land reportedly do not consider it in their interest to cultivate forage or to attempt to rotate or rejuvenate natural forage through rest periods.

For an excellent discussion of the problems of resource degradation and livestock raising, see Freeman et. al., 1979.

USE OF FERTILIZERS, PESTICIDES, AND FARM MACHINERY

The high cost of fertilizer products has been the chief constraint on their use. In newly occupied colonization areas, land is considered plentiful. Small farmers, therefore, most often simply move on to new areas when the natural fertility of the land they are working has been exhausted, when weed growth has made further productive efforts difficult. Little fertilizer is used in these areas.

Phosphate and nitrogen fertilizers have accounted for about 97% of the fertilizers in use. Animal dung, though, is an important fertilizer in at least some parts of the Altiplano region, but it also is often dried and used as fuel. (See AMARU IV, 1979, pp. 40 ff.)

The use of pesticides, all of which are imported, is concentrated in the Santa Cruz region in the production of cotton, sugar cane, and rice. Increased use of pesticides has been associated principally with increasing cotton production, but small farmers in some areas are using pesticides. (See Freeman et.al., 1979, on the health hazards related to current practices in lowland pesticide use).

Large scale farm machinery is in only limited use in Bolivia. It is chiefly utilized in cotton and sugar cane production in the Santa Cruz region. Bolivia has the lowest level of tractor use among the South American nations.

ANIMAL TRACTION AS AT ALTERNATIVE IN BOLIVIA

Very considerable efforts have been made to increase the use of animal traction by the small farmer. Farmers in the Altiplano and higher areas have a tradition of using teams of oxen for various phases of the agricultural cycle. (See AMARU IV, 1979). In the Valles and in some parts of the Oriente small farmers use oxen teams, but more often, if animal traction is used, it means horse or mule teams. Advantages noted for animal traction as an AT alternative in Bolivia include:

- A small farmer can cultivate a larger area of land than possible with only manual labor.

- The use of tractors is economical in comparison for farmers with limited amounts of land and/or capital.

- Of various schemes for intensification of agricultural efforts, animal traction requires the smallest investment of capital.

- In the Oriente in general, provided that slash and burn fields are cleared of stumps and debris, animal traction offers a low cost way to occupy intensively and crop land, to prevent weed invasion and decline in fertility, and to allow more return on labor and capital invested in the land. By encouraging more permanent occupation, in relation to colonization zones at least, there will be feedback effects such as the improvement of possibilities for better infrastructure delivery and social and health services, because settlers will have greater leverage in political action.

- The use of animal traction will mean a greater return to the small farmer's own labor. It will, thus, mean a lowering of the need for hired labor

or hired machinery, on which capital is spent and returns to labor through self-employment are lessened.

- Animal traction teams provide services for personal and goods transportation in addition to their work in agriculture.

Disadvantages of animal traction as an AT alternative in Bolivia include:

- The lack of knowledge of animal care and use among some segments of the rural population.
- Animal traction teams require a greater amount of time to clear stumps in slash and burn fields than mechanized means.
- Animals must have areas of pasture and/or fodder for their feeding.
- Animals must be monitored and cared for due to their susceptibility to disease and age deterioration.

See Graber, 1979, for economic production data comparing manual, animal traction, and mechanized productive technologies.

CROP DIVERSIFICATION AS AN AT ALTERNATIVE IN BOLIVIA

Implied in much of the coverage of institutions involved in agricultural development in Bolivia, is the need for and importance placed on crop diversification and improvement in all rural areas of Bolivia. Many institutions are working in this area supplying variety tests, extension programs, credits, and other support. Livestock raising is also benefitting from the development, testing, and extension of improved pasture and forage in many parts of Bolivia.

AGRICULTURE AT INVENTORY

CURRENT AT IN AGRICULTURE

NAME: Traditional Highland Campesino Crop Storage Practices

DESCRIPTION: Highland rural peasant crop storages include:

- o A hole dug one meter deep and two meters in diameter, lined with straw. A layer of potatoes alternates with a layer of plant locally known as "munia", to which insect repellent qualities are attributed. The hole is then covered with earth.
- o Small free-standing silos of rock and adobe are constructed. They have high, window-like doors. They generally hold 2.5 to 4.5 tons. They are used for corn storage.
- o Earthern storage bins are also made for corn.

(See AMARU IV, 1979, p. 36 for more details)

NAME: Traditional Highland Campesino Agricultural Practices

DESCRIPTION: Traditional highland rural peasant agricultural practices which are relevant to an inventory of Appropriate Technology include:

- o Use and maintenance of irrigation canals
- o Manuring of fields with llama and/or goat manure
- o Crop rotation
- o Seed selection and storage
- o Special knowledge of use of pastures
- o Food preservation - drying or "jerking of meat"
- o Stone terrace construction
- o Planting and cultivating trees, willows, poplars, and eucalypts

(See AMARU IV, 1979, pp. 14 and 37, Plate 4)

NAME: Traditional Lowland Campesino Agricultural Practices

DESCRIPTION: Traditional Lowland Campesino Agricultural practices which are relevant to an inventory of appropriate technology include:

- o Mounding and digging drainage ditches in corn fields
- o Interplanting of frejol beans with corn

(See AMARU IV, 1979, pp. 115, 116, 119)

NAME: Traditional Lowland Campesino Agricultural Implements

DESCRIPTION: Traditional Lowland Campesino Agricultural Implements include:

- o Jab Planter
- o Machete
- o Shovel
- o Hoe
- o American Paring Knife
- o Rice Sheller
- o Board Thresher
- o Hull Machine
- o Axe
- o Husking Peg

(See AMARU IV, 1979, p. 107)

NAME: Traditional Lowland Campesino Crop Storage Practices

DESCRIPTION: Traditional Campesino Peasang Crop Storage Practices include:

- o Raised platforms built in the field
- o Storage shack built in the field or near the house
- o Raised platforms built as lofts in houses

(See AMARU IV, p. 115)

NAME: Traditional Highland Campesino Agricultural Implements

DESCRIPTION: Traditional Highland Campesino Agricultural Implements include:

- o Plow
- o Footplow
- o Long-bladed hoe
- o Short-handled scythes
- o Small scythe
- o Small slingshot
- o Braided ropes of llama wool

(See AMARU IV, 1979, p. 37 and Plate 2)

Figure III-1
Traditional Highland Plow

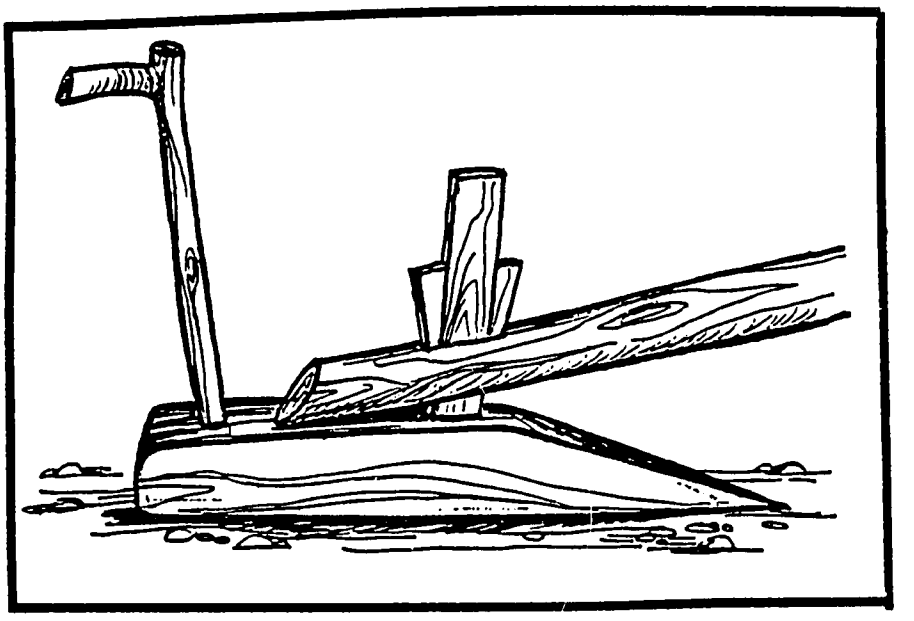

NAME: Spades, Light and Heavy Hoes

LOCATION: Metisa, LTDA., Santa Cruz, Bolivia

DESCRIPTION: See Metisa, Institution Section

NAME: Hand-Operated Jab Planters

LOCATION: Santa Cruz and other Bolivian lowland areas - Hardware Stores,

DESCRIPTION: These planters make the seeding operation on small plots easier and faster. They are currently made and sold in Bolivia. They sell in Santa Cruz for US$10 (b$200).

NAME: Farming Handtools

LOCATION: Surveyed at various hardware stores and the open market of Cochabamba

DESCRIPTION: Prices as of October 1979 for implements commonly sold in retail hardware stores catering to farmers include the following:

Some Implement Prices Hardware stores (various)	b$
Metal wheel barrow (imp. Brazil)	1,625
Hoe (imp. Argentina) about 20-25 unblade, no handle	95
Axes (imp. U.K.), no handle	175 + 185
Roding axes (imp. Spain) no handle	247 + 262
Spade (Ind. Bolivina, Santa Cruz)	
pointed blade, w.d-typed handle	78.
Chicken wire (Fabrica Oso, Cochabamba)	
90 cm wide	
1" hole	17.
3/4" hole	15.
Hose, plastic, ½"	3.
Heavy hoe, 20 m, handle (imp. U.K.)	95.
Horseshoe, small	28.
*Sickel, large (has teeth, not a knife edge)	22.
*Sickel, small	15.
*Knives, small (2/5)	2.50
*Knives, large (like small machete)	10.
In Santa Cruz	
Hand-Jab Planter (wood)	200.

*All items have a wooden handle, hand shaped from a branch or piece of wood. Metal parts are made from scrap, possibly old springs, etc., and sharpened.

NAME: Dutch Hoe

LOCATION: Mennonite Colonies, Santa Cruz, Bolivia

DESCRIPTION: This hoe weeds and cultivates at the same time and is currently in wide use in the Mennonite colonies.

Figure III-2
Dutch Hoe

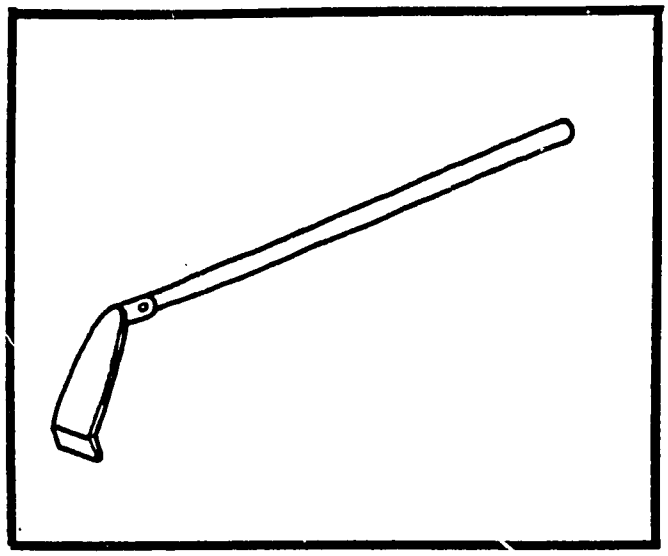

NAME: Mennonite Corn Storage Bin

LOCATION: Mennonite Colonies, Santa Cruz, Bolivia

DESCRIPTION: In the Mennonite colonies regular corn bins are used, and reportedly give good results year around.

The corn bins are little houses with the side closed by wire and a slat of wood. They are covered with a tin roof.

NAME: Mennonite Wagon

LOCATION: Mennonite Central Committee and Mennonite Colonies, Santa Cruz, Bolivia

DESCRIPTION: The Mennonite Central Committee has constructured a number of wagon models made from old Volkswagon wheels and chassis parts with a wooden box placed on top of them. The Mennonite colonists have home-built wagons which have a suspension system. All of the models can be pulled by an animal team or a tractor, and are useful to transport people or products. (See Figure)

NAME: Harness Repair Bench

LOCATION: Mennonite Colonies

DESCRIPTION: The Mennonite Demonstration Farm also has devised and sells a harness repair bench. It consists of a simple bench on which two pieces of wood are connected vertically. These two pieces have claws at the end and are connected with a large bolt. They act as a large vice to keep leather parts of a harness in place for possible repair.

Figure III-3
Harnesss Repair Bench

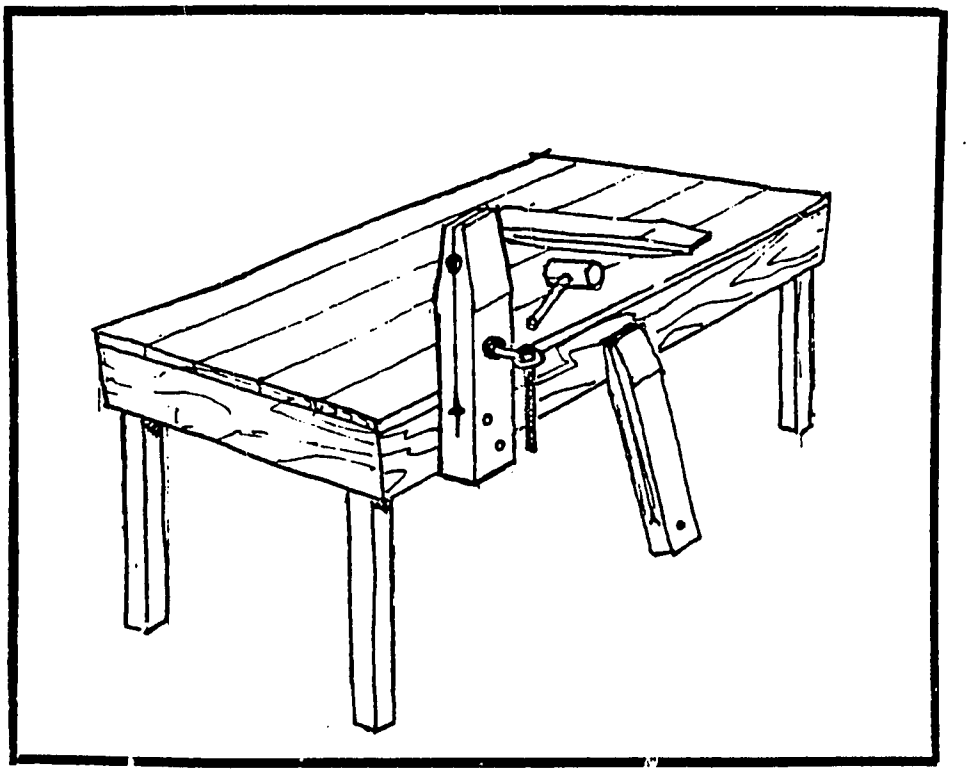

NAME: Wooden Beam Plow

LOCATION: Mennonite Central Committee Demonstration Farm, Santa Cruz, Bolivia

DESCRIPTION: The Mennonite demonstration farm sells a very simple plow with a wooden beam made locally for US$50 (b$1,000) and an all steel plow imported from Argentina for US$150 (b$3,000). (See Figure III-4

Figure III-4
Wooden Beam Plow

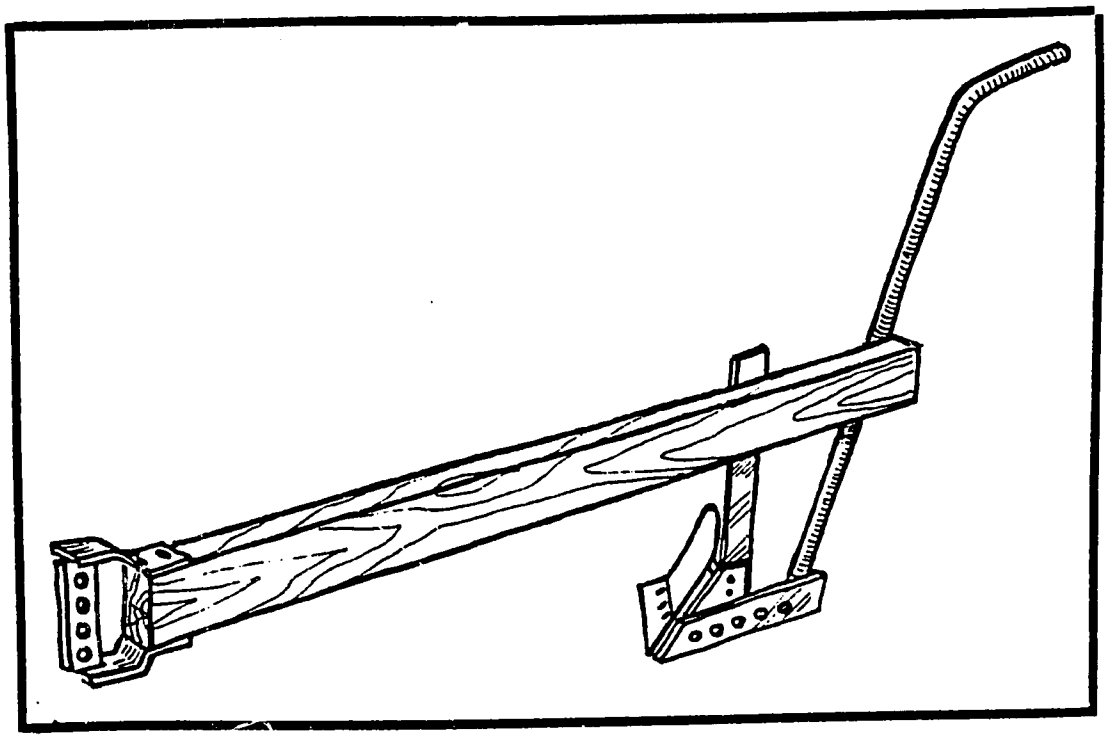

NAME: Wind Break Retention

LOCATION: Mennonite Colonies, Santa Cruz, Bolivia

DESCRIPTION: Long strips are left of trees and stumps between cleared fields. Uncleared strips serve as wind breaks.

NAME: Mennonite Small Mechanics Shops

LOCATION: Mennonite Colonies, Santa Cruz, Bolivia

DESCRIPTION: The Mennonite colonies have several well equipped mechanic shops, who only only can repair farm machinery, but are capable of producing factory-like farm machinery as four row corn planters, hammer mills for grinding fee, blowers, elevators, windmills, power take-off for windmills, and many other pieces of machinery for farm and household.

NAME: Cheese Processing Technology

LOCATION: Mennonite Colonies

DESCRIPTION: Milk is heated to 32°C for 30 minutes. Rennet extract is added to coagulate the milk. Then whey is drained from the vats and is returned to the producers to feed to their pigs. The cheese is then pushed together for almost 24 hours, i.e. until the next morning, when the pressed cheese is removed and placed on shelves to further drain and dry. The total production is sold everyday. Four to five people work in the plant.

The milk vats are of stainless steel, but locally made. They are roughly 1.5m wide, 1 m deep and 5 m long, with a drain at the bottom. Once cleaned, they are covered with cloth as protection against the few flies present.

Cheese presses are constructed of two lower pipes and two upper pipes (2" pipe approximately) as guidelines for the form boxes. At one end is an old truck coil spring covered with a steel plate. The plant is about 20x10 m more or less. The total installation once cost b$400,000.

The main daily cash income comes from the sale of a simple cheese, made from the daily milk production. About 8 kg of milk produce one kg of cheese. Sale price of the cheese is about b$37.50/kg FOB making a total cost of about b$30.35 and gross profit margin of b$6-7/kg.

NAME: Mennonite Peanut Sheller

LOCATION: Mennonite Central Committee

DESCRIPTION: The sheller is a hopper on wooden legs. The peanuts fall on a rotating drum made out of sheet metal which has been converted into a scraper by using a center punch to make holes, but leaving the pushed out metal sticking out of the outside of the drum. This drum rotates against a metel screen with holes small enough to retain the whole peanut, but permitting the shelled peanut and broken shells to fall through.

This material falls on the shaker. A blower removes the light shells and the shelled peanuts are shaken out on the other side.

Figure III-5
Mennonite Peanut Sheller

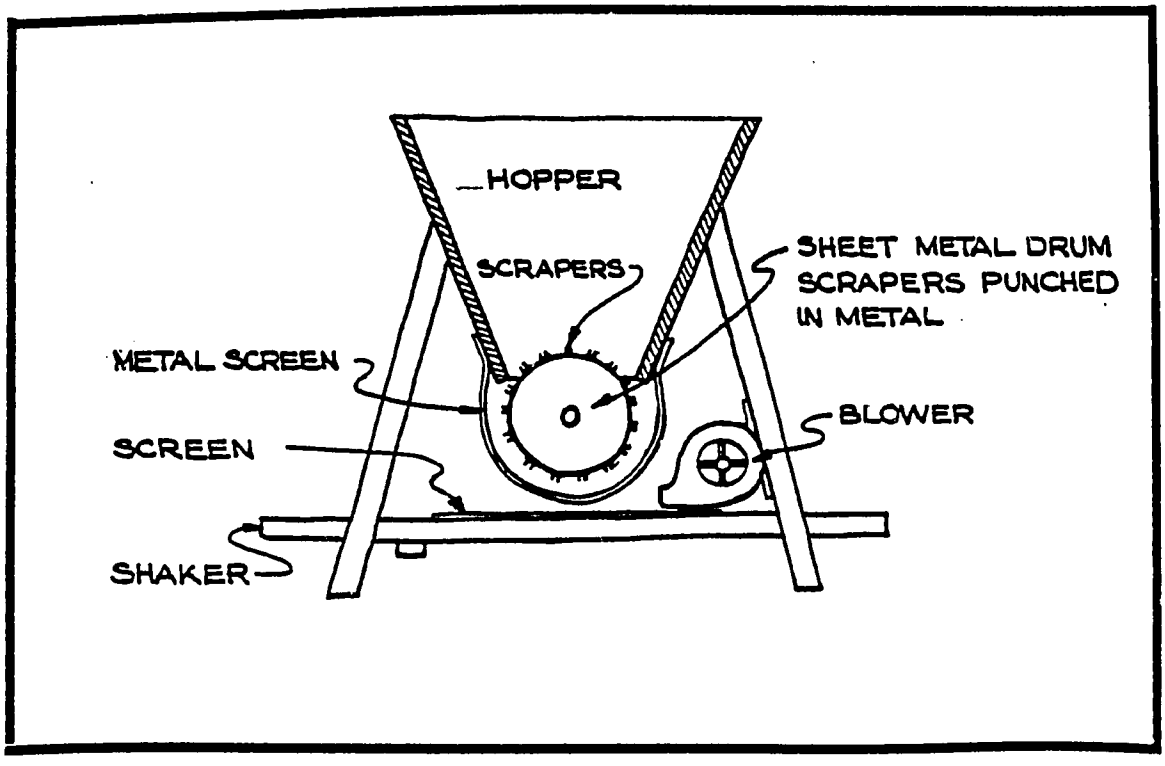

DIFFUSING AT IN AGRICULTURE

The following Appropriate Technologies are being demonstrated among local campesino groups or are pilot programs to give appropriate training:

NAME: Fish Ponds and Tomato Production in the Chapare

LOCATION: Caritas, La Paz

DESCRIPTION: See Caritas, Special Programs, Institution Section, below

NAME: Short Course on Beef Cattle, Fruits and Vegetables

LOCATION: FOMO, Ministerio de Trabajo, Santa Cruz

DESCRIPTION: See FOMO, Institution Section, below

NAME: Agricultural Mechanics Course

LOCATION: CIFEMA, Universidad Mayor de San Simon, Cochabamba

DESCRIPTION: The comprehensive course for agricultural mechanics covers: basic work on the workbench, welding, use of the forge, parts and functioning of a tractor and farm implements, maintenance of tractor and farm implements, production of tools and implements for animal traction.

The course for tractor drivers covers: parts and functioning of a tractor and implements, efficient use of a tractor and implements, maintenance of a tractor and implements, repair of a tractor and implements.

Students for the mechanics or tractor course have to have at least an elementary school education, be 19 years of age or more, and come from villages.

The elective course at the School of Agriculture of San Simon covers farm machinery, tractors and animal traction equipment. Students also learn how to drive tractors. The faculty also teaches a regular course in Farm Machinery. For laboratory and field work the farm machinery at Tamborada and the university farm are used. Some of the students from San Simon choose to do their mandatory thesis project with CIFEMA after taking the elective course.

NAME: Potato Production Improvement, Instruction and Credit

LOCATION: ASAR, Asociacion de Servicios Artesanales y Rurales

DESCRIPTION: See DESEC/ASAR, Institution Section, below

NAME: Tropical Crop Diversification and Pasture Raising

LOCATION: ASAR, Asociacion de Servicios Artesanales y Rurales

DESCRIPTION: See DESEC/ASAR, Institution Section, below

NAME: Farm Machinery Service and Credit Provision

LOCATION: ASAR, Asociacion de Servicios Artesanales y Rurales

DESCRIPTION: See DESEC/ASAR, Institution Section, below

NAME: Rural Agricultural Training Center

LOCATION: Instituto Nacional de Colonizacion, Chapare

DESCRIPTION: See INC, Institution Section, below

NAME: Crop Improvement and Diversification Program in Alto Beni

LOCATION: ASEC

DESCRIPTION: See ASEC, Institution Section, below

NAME: Crop Improvement in High and Low Altitude Areas, Department of La Pa

LOCATION: ASEC

DESCRIPTION: See ASEC, Institution Section, below

ADAPTING **AT** IN AGRICULTURE:

The following Appropriate Technologies are in the process of design, testing or adaptation to Bolivian conditions in research institutions:

NAME: 40 square meter Plastic Greenhouse

LOCATION: Instituto de Investigaciónes Fisicas (IIF), Universidad Mayor de San Andres, La Paz

DESCRIPTION: The group has a prototype plastic greenhouse which is 40 square meters in size. It consists of a plastic covering over a steel frame with a wooden base. Water is heated inside which maintains the temperature through the night. It is in the shape of a quonset hut. Unfortunately, no cost figures on this greenhouse were available. The group is considering using other materials for construction including glass fiber and plastic. The group has also considered the possibility of drying meat through solar radiation.

NAME: Ulla Ulla Project Crop and Pasture Experiments

LOCATION: Ulla Ulla Project

DESCRIPTION: The Ulla Ulla Project covers 150,000 sq. km and involves 3,500 families. The project area is at 4,200 - 4,400 m altitude, with an average temperature of 8-9°C. There are 200 days per year with frost, which makes any crop production very difficult. However, barley and oats experiments appear promising. So far only 20 ha of pasture have been seeded.

It is considered possible to develop the following crops for silage as animal feed: clovers, rye grass, alfalfa, orchard grass and fescue.

These pasture crops (silage) have been used with success in other areas which have the same ecological conditions as the Ulla Ulla Project. Local experience with these crops so far is limited.

However, experiments are under way at the IBTA Agriculture Experiment Stations at Patacamayo and Belen. Similar experiments are also underway in the Altiplano in Peru. There are six agricultural engineers who work as extension workers in the project area and also live there.

NAME: Weed control and Fertility Maintenance in Tropical Agriculture

LOCATION: La Jota Agricultural Experiment Station

DESCRIPTION: See IBTA, La Jota Agriculture Experiment Station, Institutional Section below

NAME: Controlled Droplet Applicator

LOCATION: Saavedra CIAT Experiment Station

DESCRIPTION: Herbicide application with knapsack sprayers requires 200 l/ha to be brought to the field. With controlled droplet application this can be reduced to 20 l/ha with skill.

It is recommended by technicians at CIAT in Santa Cruz as a means to control weed growth, when hand weeding is especially difficult for the small farmer, i.e. during the wet months of December-January. It is most important to control weeds at this time for proper development of the corn and rice crops.

NAME: Storage Silo

LOCATION: Toralapa Agriculture Experiment Station

DESCRIPTION: The silo is a trench constructed of adobe and rocks. The roof is made of straw covered with earth. There is a ventilating channel through the silo, and a vertical tube at the entrance. Through this tube moisture enters and is distributed to retain the humidity in the silo.

Another larger model is constructed also of adobe and rocks. Air channels are left throughout the floor. The roof is made of fiber cement and potatoes are stored to about the height of a person. Different lots are separated by partitions. This silo, while costlier than the other one described above, has not proved satisfactory because the roof permits the temperature to rise too high during the day. Subsequently, the humidity is too low in the silo and potatoes begin to dehydrate and lose weight.

NAME: Wheelbarrow Rice Thresher

LOCATION: CIAT

DESCRIPTION: A very simple rice thresher is being tried out in Santa Cruz. The design reportedly comes from CIAT-Colombia. It consists essentially of a wheelbarrow, which is open at the bottom. A box is placed under the hole to receive the rice. On three 3 sides of the upper rim of the wheelbarrow a cloth screen is attached to prevent spilling of rice. At the fourth side the farmer brings the rice shocks and strips the rice heads over the edge. As it is basically a wheelbarrow it is very mobile and can be moved over the whole field. This apparatus sells for about b$500 (US$25). (See Figure 6)

Figure III- 6

Wheelbarrow Rice Thresher

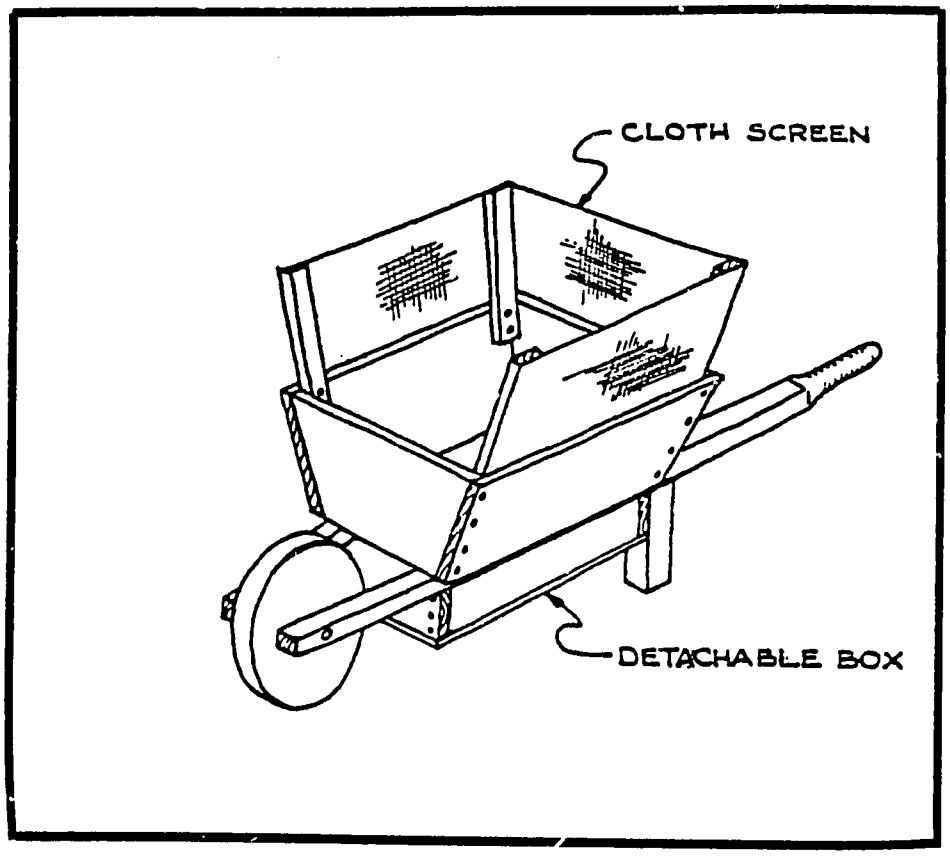

NAME: Water Buffaloes for Traction and Meat

LOCATION: La Jota Agriculture Experiment Station

DESCRIPTION: See IBTA, La Jota Agriculture Experiment Station, Institution Section, below

NAME: Improvement of Andean Cultigens (potatoes, quinua, barley, kaniwa, tarwi, kiwicha, oca, olluco, mashua, habas, oats); improvement of animal stock (alpaca, llama, sheep) and fodder for feeding

LOCATION: Patacamayo Agriculture Experiment Station, Toralapa Agriculture Experiment Station

DESCRIPTION: See IBTA, Patacamayo and Toralapa Agriculture Experiment Stations, Institution Section, below

NAME: Multiple Cropping System with: lupine, potatoes, corn, beans, Dolichos lab lab Soil improvement through composting

LOCATION: Proyecto Agrobiologia Cochabamba

DESCRIPTION: See Universidad Mayor de San Simon, Insitution Section, below

NAME: Tropical Crop Diversification and Improvement: corn, sorghum, wheat, rice, soya, peanuts, sunflowers, sesame, rubber, pejebaye palm, tomatoes, cucumber, watermelon, papaya, mango

LOCATION: La Jota Agricultural Experiment Station and Saavedra CIAT Station

DESCRIPTION: See IBTA, La Jota Agriculture Experiment Station, and CIAT, Saavedra Experiment Station, Institutional Section, below

NAME: Fertilizer Applicator for Potatoes

LOCATION. Toralapa Agriculture Experiment Station

DESCRIPTION: The machine consists of two small rubber-tired wheels (their cost was US$30.) connected by two angle irons, which carry a rectangular sheet metal box. The two wheels are aligned one behind the other, i.e. one in front of the box and one behind. Through the length of the bottom of the box runs a rubber belt. This belt runs over a roll or axle at each end, one of which moves the belt. The belt is driven by a chain connecting a sprocket (from a bicycle) to another sprocket on the rear rubber wheel. This sprocket delivers the power. On the side of the box connected to the right angle iron is a simple blade. The blade's height can be adjusted by a screw. There are two handles to push the machine. For commercial adaptation, a fertilizer hopper would have to be placed on top of the metal box. This box has a small opening at the bottom. In this opening is a small axle which has a ribboned surface. This axle has a sprocket on the outside which is driven by a chain connected to a sprocket sitting on the same axle as the bicycle sprocket. The machine functions in the following way: When pushed in the furrow, the first wheel smoothes the furrow. Behind it, the fertilizer drops uniformly from the rubber band. The fertilizer is placed on the rubber band by dropping down from the fertilizer hopper, from which it is moved at a uniform rate by the ribboned axle at its bottom opening. Once the fertilizer is in the furrow, the blade moves enough soil to cover it, so that fertilizer will be uniformly and well placed below the potato seed, but not come into direct contact with it. This contact might dehydrate (burn) the seed. Finally, the rear wheel passes over the added soil and leaves a smooth furrow ready to receive the potato seed pieces.

This machine was designed by Dr. Lunkel, potato agronomist of the Canadian International Development Agency (CIDA), to apply fertilizer uniformly on potatoes. He did this after he discovered that experimental results between duplicate plots varied widely. He designed this machine for use in experimental work; however, with a slight adaptation, i.e. the use of a larger hopper on top, it could be used commercially. The cost of the model built by Dr. Knunkel was less than US$150, although when he tried to have some mechanics shop construct it according to his plans, the offer was equivalent to US$800. While even US$150 is a very substantial amount for small potato growers, it might be possible for several to use one together. Better yields and fertilizer savings would probably pay for it. Some data on this machine's performance should be available

from the Toralapa station after this growing season. (See Figure 7)

Figure III-7
Fertilizer Applicator for Potatoes

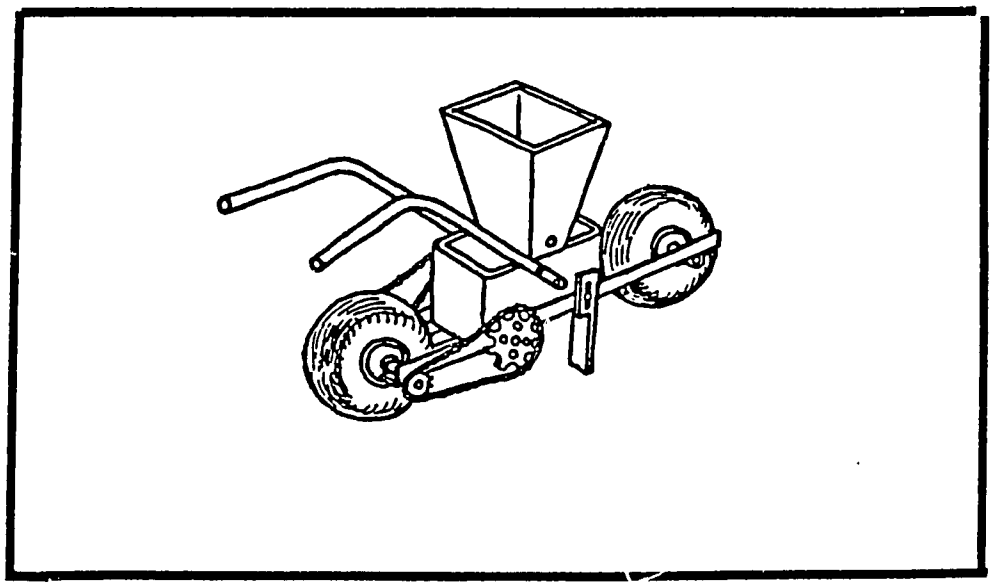

NAME: Pedal-type Rice Thresher

LOCATION: CIAT

DESCRIPTION: This is essentially a drum spiked with U-shaped wire loops (or possibly u-shaped nails), which is rotated by a foot pedal. A tarpaulin to catch the threshed rice is placed beneath it. A model considered for trials in Santa Cruz has a hood to prevent the rice from flying out of the thresher. A VITA model successfully used in Nepal lacks this feature.

It is a little awkward to transport as designed, but probably could be equipped with permanent or detachable handles without much additional cost and effort. (See Figure III-8)

Figure III-8
Pedal-type Rice Thresher

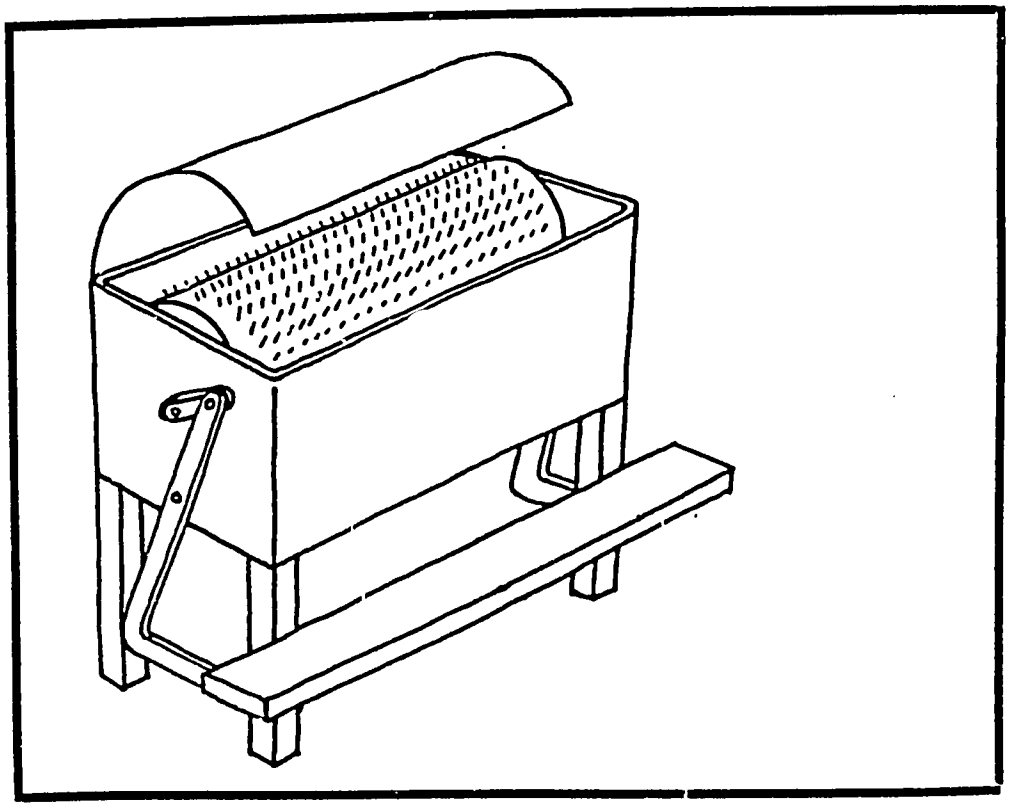

NAME: Animal Traction Team Harness

LOCATION: Mennonite Central Committee, Demonstration Farm, Santa Cruz, Bolivia

DESCRIPTION: At the demonstration farm, a harness for a team of horses sells for US$150 (b$3,000). Farmers purchasing the unit must pay 25% down, may set their own repayment schedule, and must pay 12% on the outstanding balance.

NAME: Animal Traction Tester

LOCATION: CIFEMA, Universidad Mayor de San Simon, Cochabamba

DESCRIPTION: CIFEMA has built an animal traction tester to test the effectiveness of different animal harnesses.

It is essentially a beam rotating over a central point. Pull power can then be measured by having the other end of the beam pulling agianst an apparatus measuring the pull, or simply a wagon or sled loaded with a known weight. (See Figure 9)

Figure III-9
Animal Traction Tester

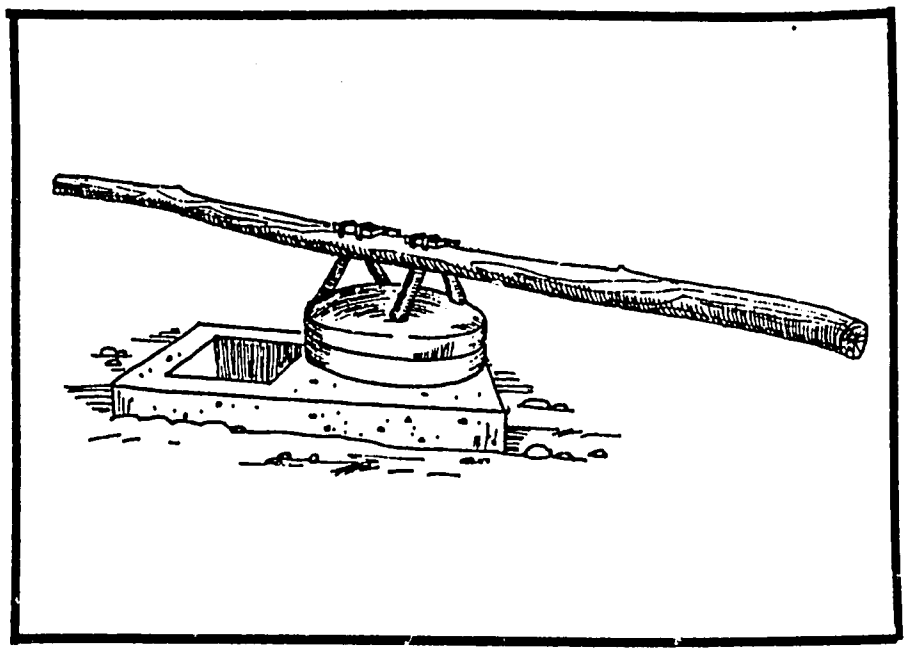

NAME: West African Harrow

LOCATION: CIFEMA, Universidad Mayor de San Simon, Cochabamba

DESCRIPTION: The harrow is a rectangular board with knife-like edges nailed to it below. There are two to four rows of these edges, each row is set off at a 15° angle to the right or the left. This is a harrow designed and used originally in West Africa where its use gave a rate of 30% better germination in grain because it was effective in breaking up soil clods and in covering cereal seeds. A prototype of this harrow has been built at CIFEMA. (See Figure III-10.)

Figure III-10
West African Harrow

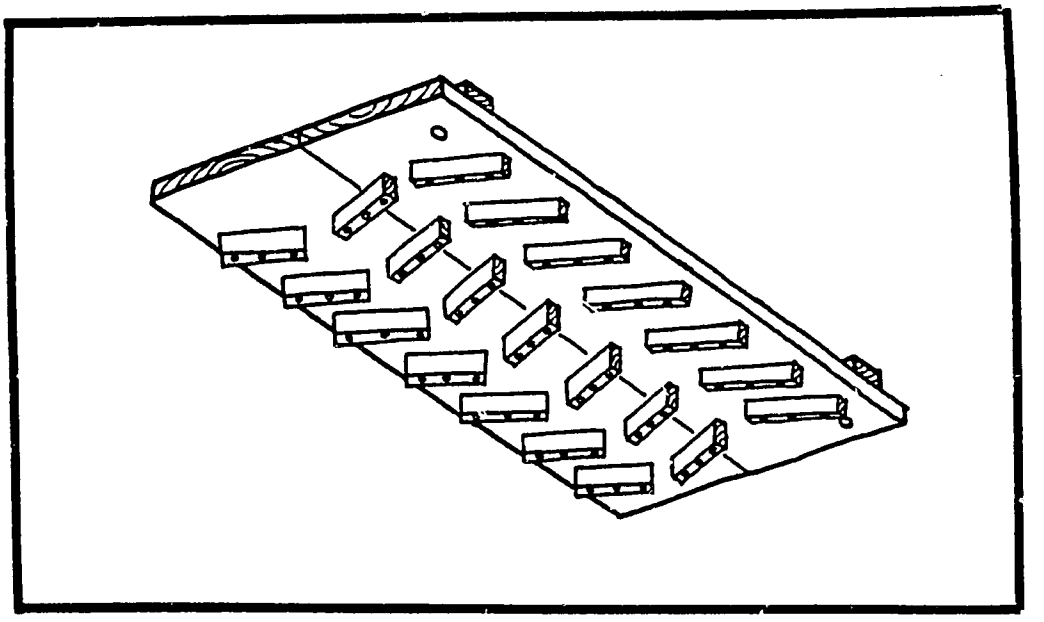

NAME: Improved Plow Designs and Prototypes: Metal Version of Traditional Plow, Small Mold Board Plow, Reversible Plow, V-shaped Ridger Plow, Potato Harvester Plow, Adjustable Point Plow

LOCATION: CIFEMA, Universidad Mayor de San Simon, Cochabamba

DESCRIPTION: See CIFEMA, Institution Section

Figure III-11
CIFEMA Potato Harvester Plow

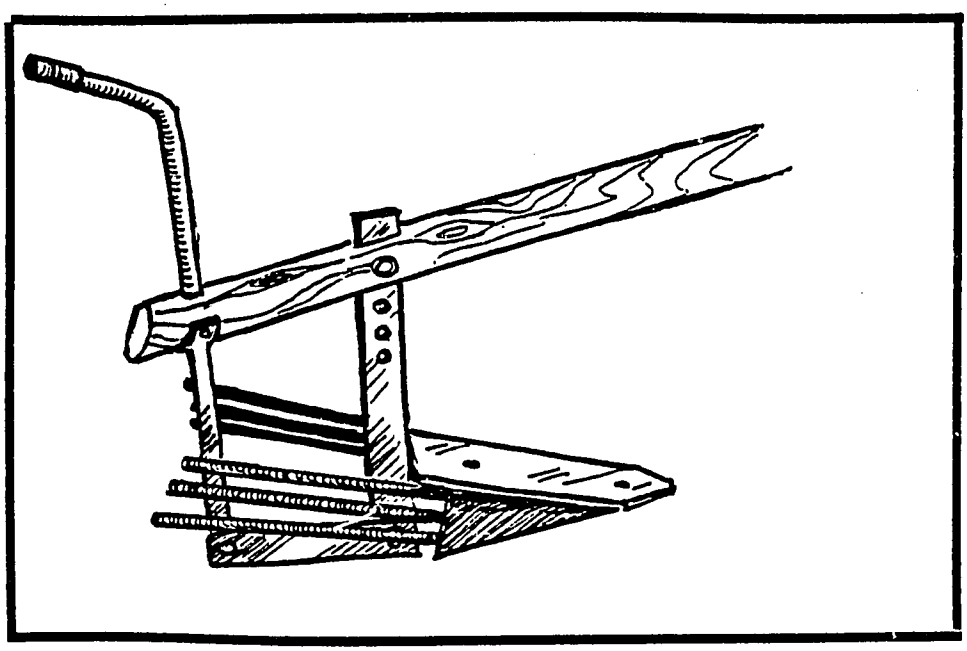

Figure III-12
CIFEMA V-Shaped Ridge Plow

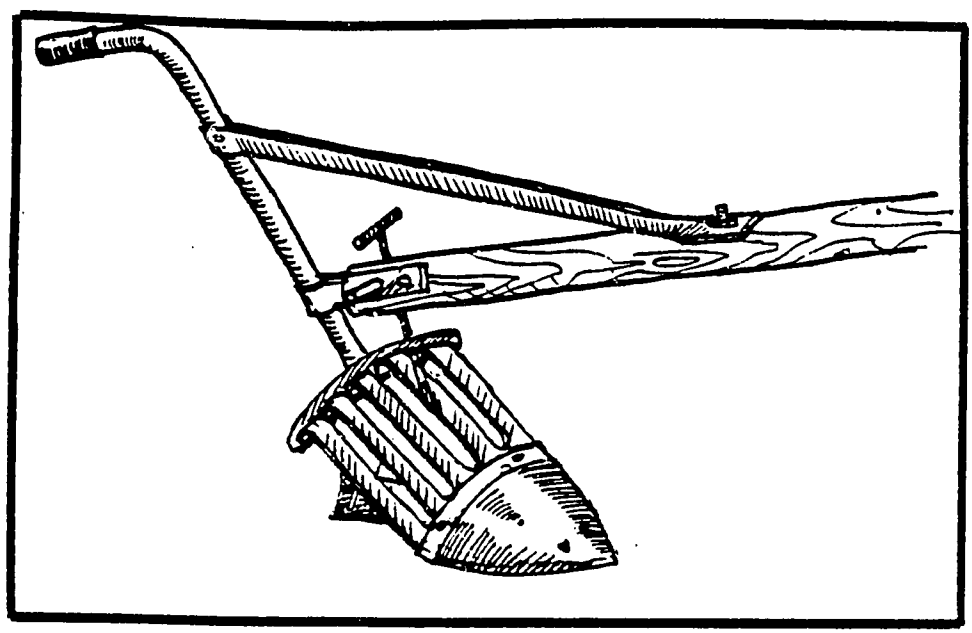

SUGGESTED **AT** IN AGRICULTURE FOR TRANSFER TO BOLIVIA

NAME: Scythe with Grain Cradle

DESCRIPTION: A scythe is, of course, a much more efficient tool to harvest grain (provided it is not lodging) than a sickle, especially if it is fitted with a grain cradle. A grain cradle is easily constructed from some pieces of wood, or wood and branches, or wood, branches and wire.

A scythe without the grain cradle is very effective to cut forage, especially alfalfa or grass.

To use a scythe really effectively is quite an art. Besides knowing how to swing it, one has to maintain it in the field by carrying a sharpening stone, which is carried in a water container (can be a cow's horn) on one's belt or elsewhere.

To keep a scythe really sharp, it has to be placed on a small anvil from time to time and the cutting edge hammered thin, then sharpened again. An intermediate tool, which is useful to cut lodged grain is a cross between scythe and sickle, i.e. a short scythe blade with a handle fitted immediately to the blade, handled almost like a sickle. One should wear wooden Dutch-type shoes or protect his leather shoes or feet, when using this instrument as the tip often ends up in the workers foot, which does no harm to wooden shoes but could be very damaging to feet or leather.

Figure III-13
Scythe with Grain Cradle

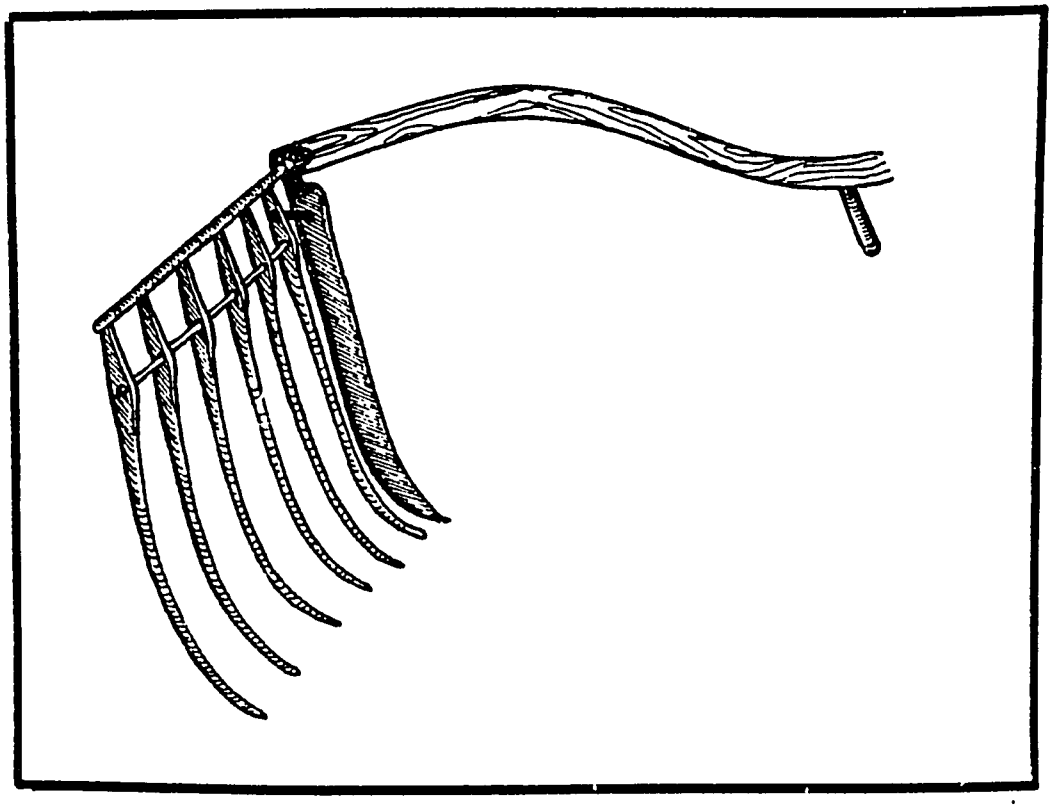

NAME: Chusa

LOCATION: Central America

DESCRIPTION: A USDA team visiting the cacao growing area in Bolivia reported that harvesting is done by machete. There is a tool, called "chusa" in Central America, which is more suitable. It is on a long handle and will cut up and down and sideways.

It is generally used for cacao, but could be useful for a number of other tree fruits also. (See Figure 14)

Figure III-14
Chusa

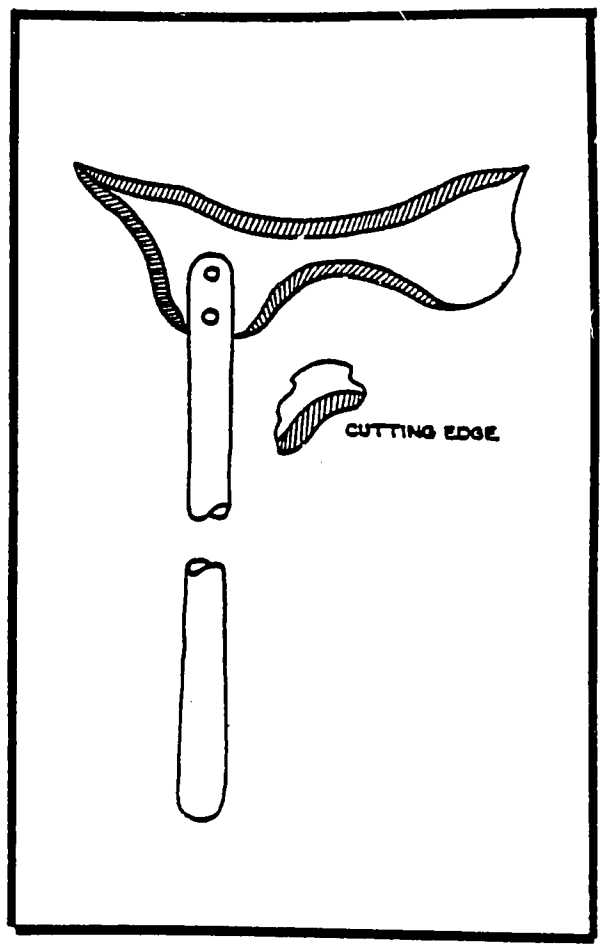

NAME: Scoop Shovel

DESCRIPTION: This is a shallow pan open on one side, which is hardened to have a cutting edge. The whole pan hangs between two handles. It is very useful to transport soil from one place to the other.

When one gets to the place where the soil is to be removed, i.e. scooped up, one directs the depth or bit into the soil with the handles. Once full one pushes on the handles so the scoop moves on top. It is then pulled by the team wherever one wants to deposit the soil. When there, one lifts the handles until the cutting edge catches in the ground, and then the team pulls the whole scoop over so the soil is dumped. (See Figure 15.)

Figure III-15
Scoop Shovel

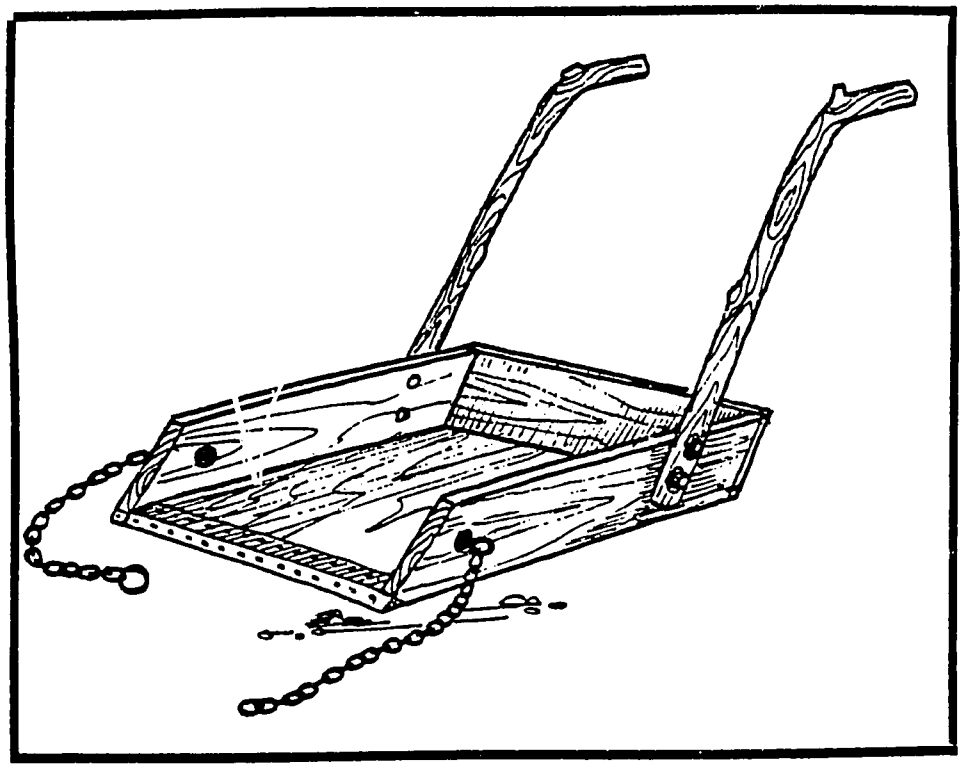

NAME: Narrow-Bladed Hoe

DESCRIPTION: A narrow bladed hoe which can be pulled through the soil with less effort than the presently used heavy hoes. This hoe weeds and produces a soil mulch which simultaneously conserves soil moisture.

NAME: Corn Pegs

LOCATION: Rural United States

DESCRIPTION: The easiest way to harvest corn by hand is to allow it hang on the stalk until the plant is dead and brown. Then, move down one row after another, husking the ears and tossing them into a wagon, cart, or pickup truck. In the past, farmers used many kinds of husking pegs strapped to their fingers or to the palm of one hand to rip the husk loose from the ear with one swift downward motion. The original husking peg was a simple piece of wood or bone about ¼inch in thickness, sharpened to a point at one end, and held in the middle joint of the fingers of the right hand. A string or leather thong held it to the fingers. The husker would slash open the husk with the point of the peg, grab a section of husk between thumb and peg, and tear it off the ear. You can do the same with your fingers, but it takes longer and is harder on the fingers.

Figure III-16
Corn Pegs

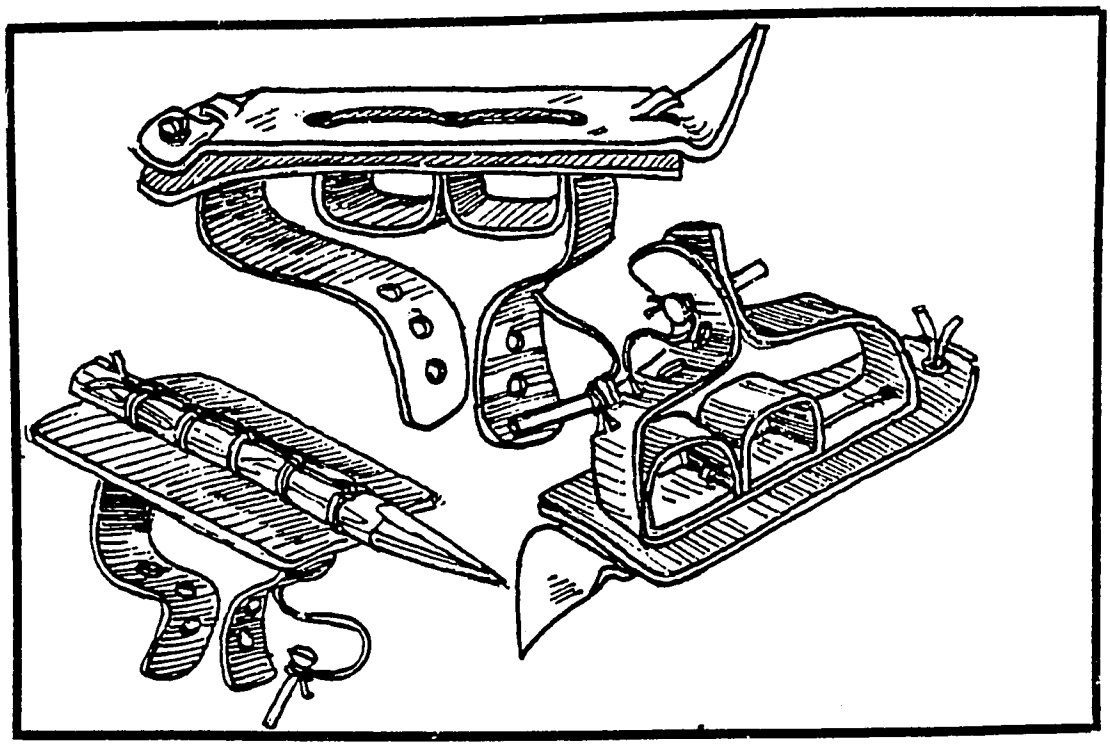

NAME: Dual Function Jab Planter

DESCRIPTION: There are some jab planters which will apply fertilizer while depositing seed. They make some holes close together but must avoid direct contact as the seed should not come in direct with the fertilizer. (See Figure 17)

Figure III-17
Dual Function Jab Planter

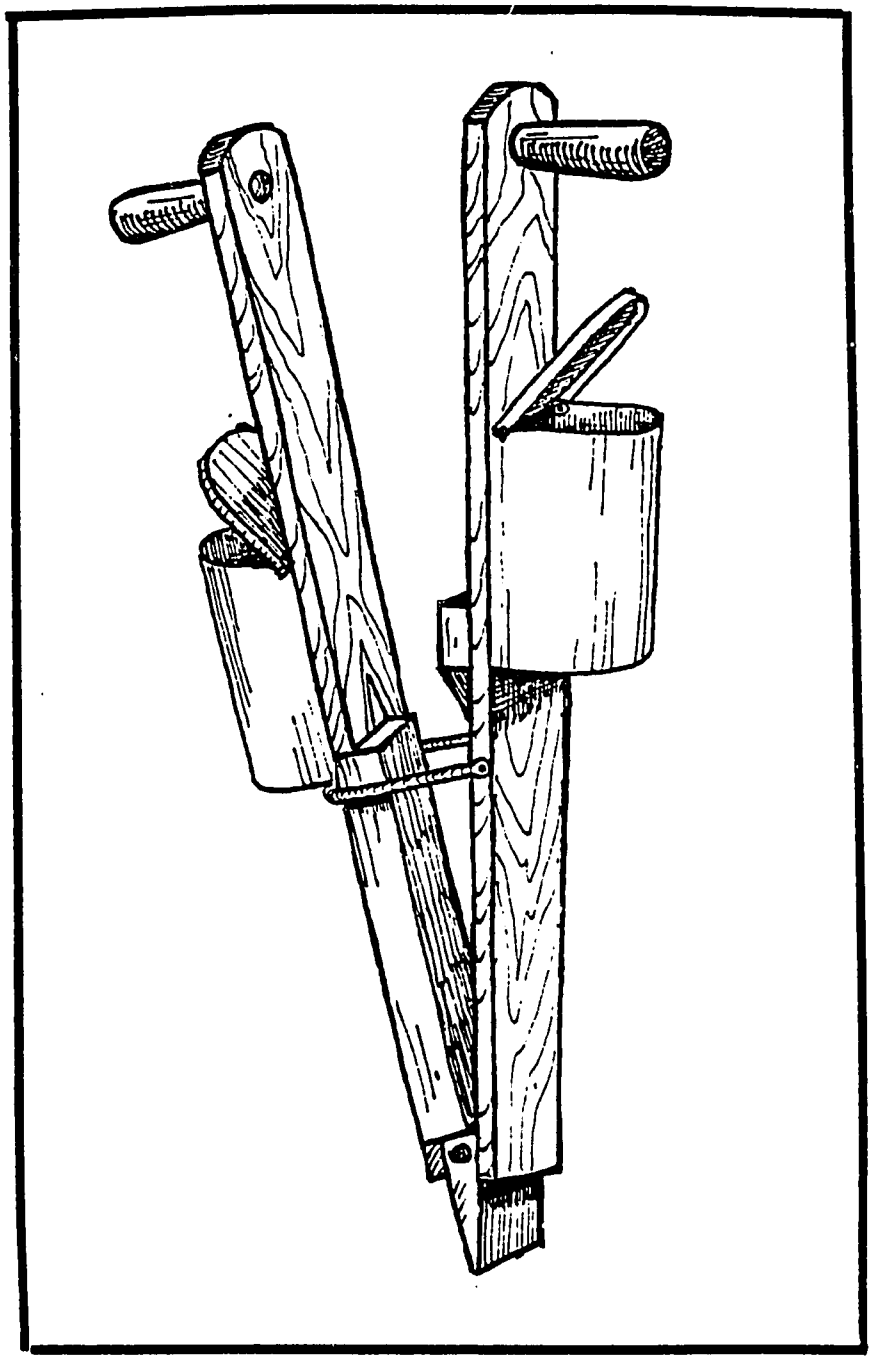

NAME: African Hand Leveling Device (Hand Scraper)

DESCRIPTION: Although there are a variety of leveling devices c ntly used in Bolivia, an African device might improve the tc nventorty. This device looks like a wooden snow shovel. It solid board on the bottom. This board has a hole on both sic rough which a rope is drawn. This role enables one or two men to assist the man directing it by pulling the device. This device is useful to level land by scraping the soil surface. Newton notes he has never seen one of these implements used in Latin America, though it is very commonly used in more arid parts of Africa where it levels the field and at the same time builds up little ridges at right angles to each other, making small basins of about 5 x 5 m. Once the rains come, these ridges will prevent run-off, and make sure all water falling on this field will infiltrate in the soil.

The levelling within the little ridges makes the water distribution as uniform as possible. Such a device will help in any area where rainfall is scant, and will help to level the land in small irrigated plots when it is wet or dry. (See Figure)

Figure III-18
Bolivian Hand Scraper

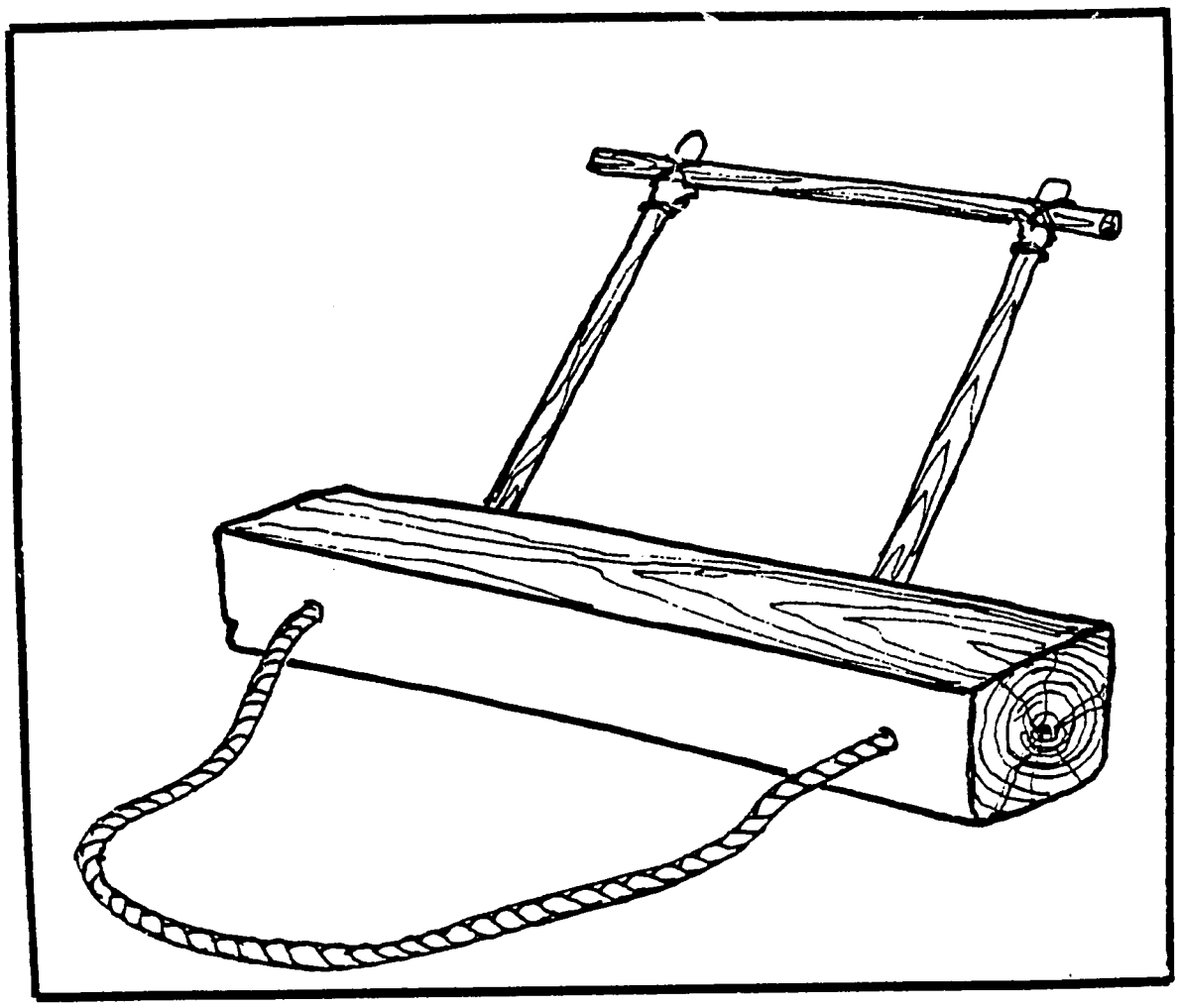

Figure III-19
African Hand Leveling Device

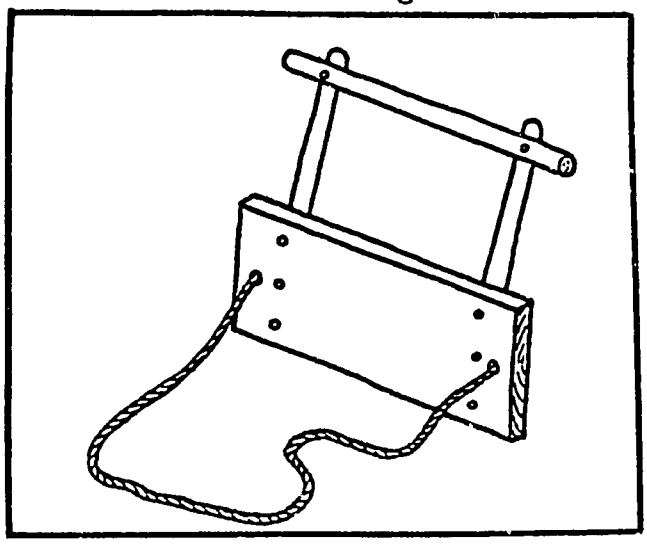

NAME: Bicycle Carrying Rack

DESCRIPTION: Bicycles are fairly common in some rural districts in Bolivia. They can be made to carry a load well in excess of what a human could carry by providing a simple carrying rack. (See Figure 20)

Figure III-20
Bicycle Carrying Rack

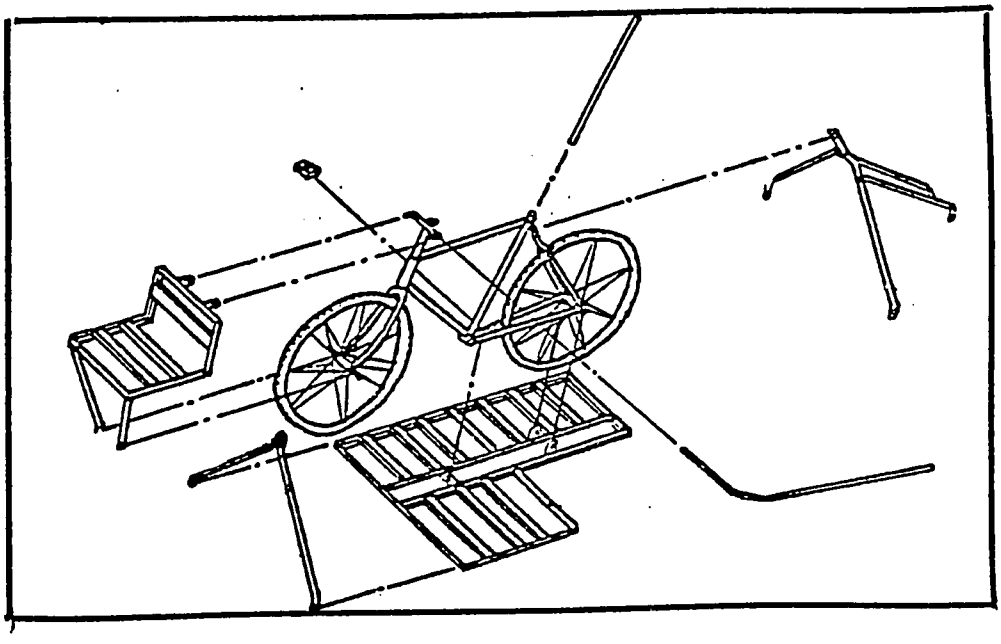

NAME: Table Top Sheller

DESCRIPTION: The sheller is screwed to the table top and operated by hand. Two rough (hobnail studded) discs work against each other and thus separate the grain from the husk. Each ear of corn has to be entered into a slot in the mahine separately. They sell for US$18 FOB factory in Colombia if bought in lots of 100 units.

NAME: Extended Blade Potato Harvester

DESCRIPTION: The most effective plow for potato harvesting has a blade which will go below the potatoes lifting them up with all the soil. The blade is extended by rods which permit the soil to drop right back while the potatoes roll off a moment later and then can be collected from the surface.

NAME: Steel-Fingered Potato Harvester

DESCRIPTION: There are mechanized models of potato harvesters which can be pulled by a team or a tractor. They consist essentially of a pair of wheels which carry the rest of the implement and serve as a power source. They connect to a small gear box, which drives an axle sitting at a right angle to the wheel axle. A set of steel fingers radiate out from this axle. Below them is a wide plow blade which cuts below the furrow. As potatoes and soil are brought the steel fingers rotate and spread the potatoes on the ground to be collected later. The distance they are thrown is in proportion to the speed of the team or tractor. (See Figure 21)

Figure III-21
Steel-fingered Potato Harvester

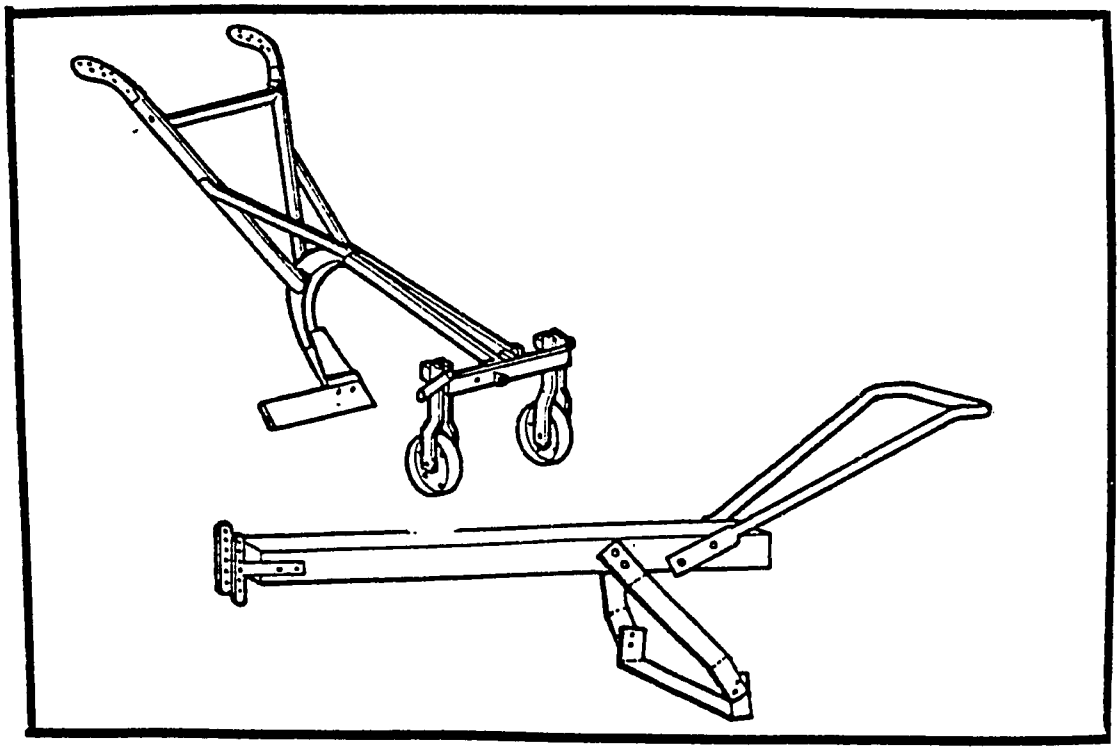

NAME: Texas Inertia Nutmaker

LOCATION: R.P. Industries
610 W. Johnson Street
Post Office Box 10938
Raleigh, North Carolina 27603 U.S.A.

DESCRIPTION: The "Texas Inertia Nutmaker" might be helpful. It is recommended for Brazil nuts, and supposedly can crack 30 nuts per minute. This would allow for a greater return on the nuts produced because shelled nuts bring a higher price and are more economical for transport. Presently available machinery in Bolivia requires a slower feeding of nuts than that possible with the Texas Inertia Nutmaker. (See Figure 22)

Figure III-22
Texas Inertia Nutmaker

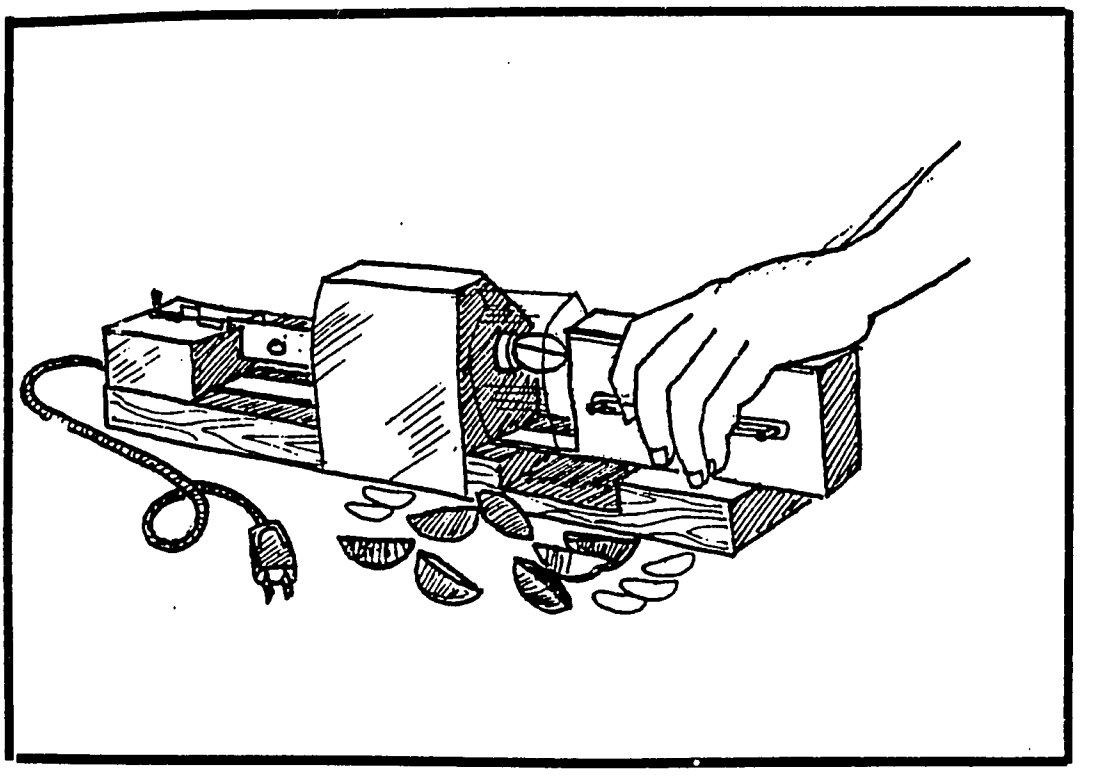

NAME: Cosi Palm Nut Cracker

DESCRIPTION: According to the VITA expert, a German has recently claimed to have developed a machine to break the kernel of the palm nut and to separate the oil from the shell. The oil has great potential utility in industry and has not yet been exploited to the present.

NAME: Coffee Processing Machinery

DESCRIPTION: The use of simple coffee processing machinery could have a positive impact on the present reported shortage. For possible guidance, the designs of a simple coffee pulper, huller, and grader are included. (See Figure 23)

Figure III-23
Coffee Processing Machinery

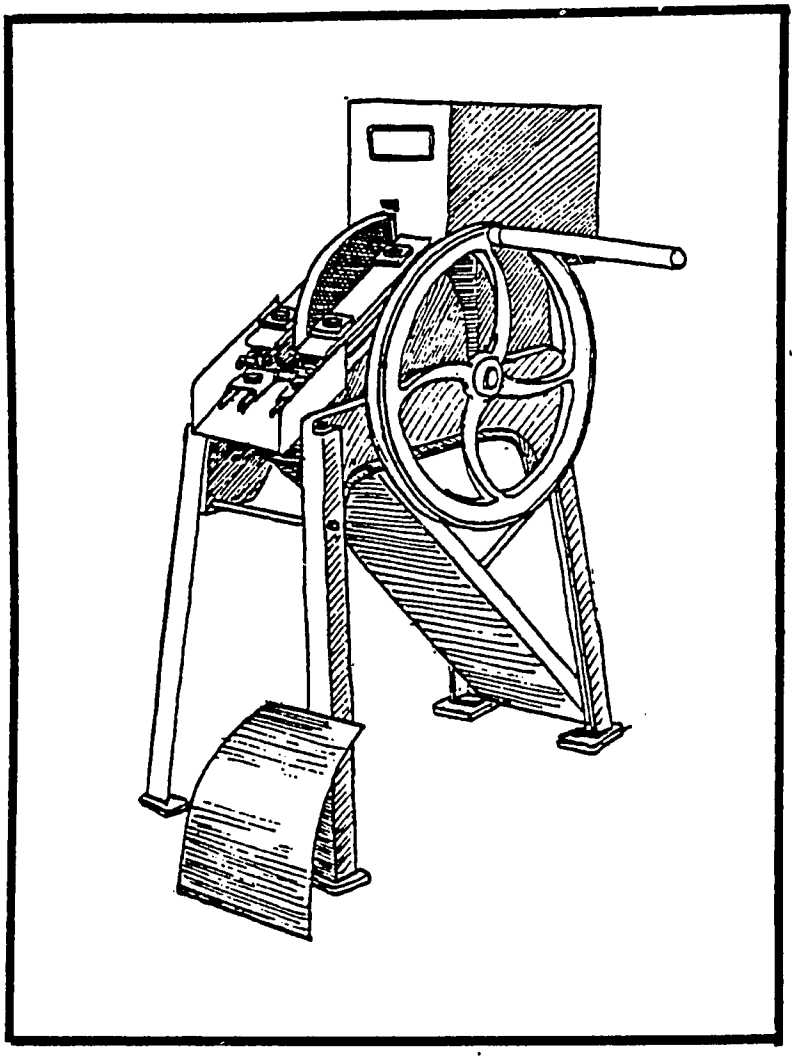

NAME: VITA Sheller

LOCATION: VITA

DESCRIPTION: VITA designed one consisting of old truck wheel rims and some cement surfaces.

NAME: VITA Corn Sheller and ITDG (Intermediate Technology Development Group) Sheller

LOCATION: VITA, and ITDG, United Kingdom

DESCRIPTION: The VITA Corn Sheller is handcranked and made entirely from some pieces of wood, rods, mills, screws and a piece of plastic pipe.

The ITDG sheller is also hand cranked, for which it uses old bicycle parts. (See Figure 24.)

Figure III-24
Corn Sheller

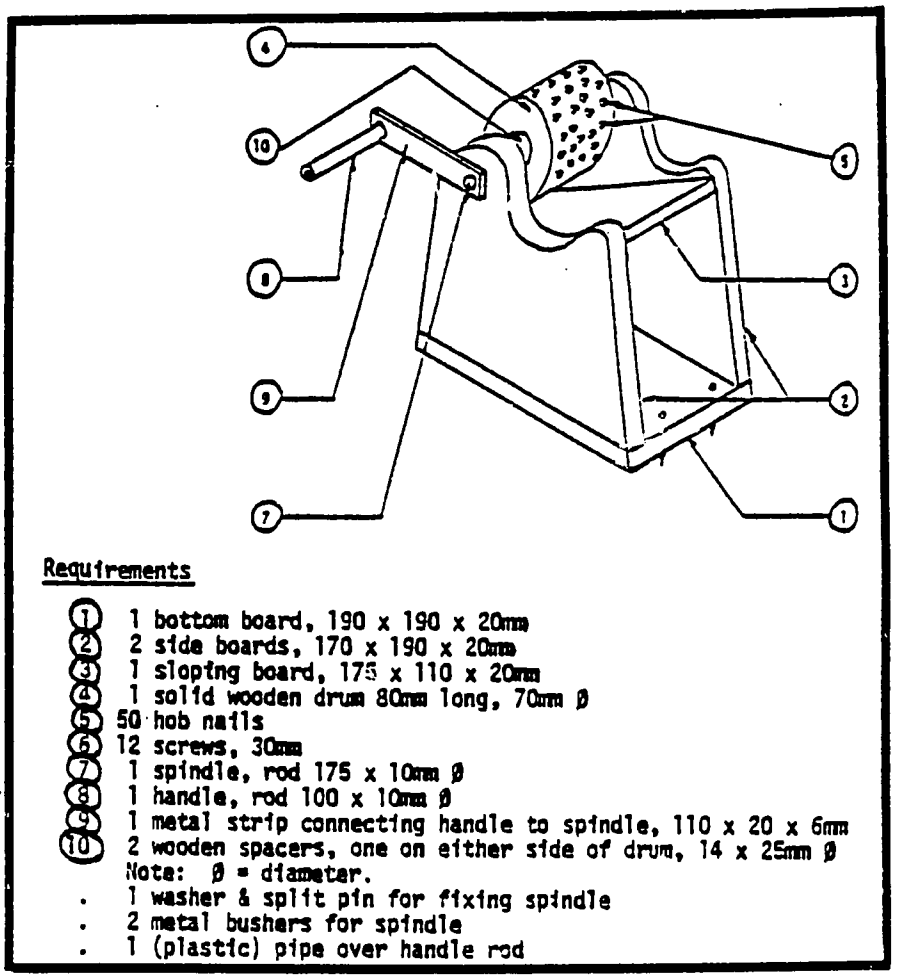

NAME: Rice Storage Shelter

DESCRIPTION: In order to provide a well-lighted, well-ventilated, and rodent-proof facility for storage of harvested rice, farmers should build raised platform shelters. To prevent rodent entry, metal cans should be placed around the poles supporting the shelter with bent, jagged edges pointing out all the way around the poles.

NAME: Potato Storage Shelters

DESCRIPTION: It appears that the best potato storage would be adobe built storage bins with a roof above. This one could be straw. The installation should have air ducts into the major wind direction.

In other countries potatoes are very well stored for several months in earthern shallow furrows or right on smooth, level ground. They are piled neatly to about 1-1.5 m height, covered with straw and on top with earth.

NAME: Scrap Material Shearing Scissors

DESCRIPTION: For more efficient and less painful shearing of animals, there is a need for simple, low cost shearing scissors. As regular scissors seem to be too costly, perhaps it would be possible to fashion some out of old springs or other scrap material.

NAME: Better Apple Nursery Procedures

DESCRIPTION: Some better nursery practices would be:

- Place seeds in small containers at first
- Use specially selected soil with compost
- Use compost in the planting holes when transplanting seedlings into the ground
- Graft root stocks with higher yielding, better quality producing parts
- Place protective walls around nurseries (adobe walls would be all right) and place wind protection around seedlings in the ground
- Use a plastic greenhouse or cold frames to germinate and start seedlings better and faster

This probably applies to other areas and other tree crops.

NAME: Self-Help Road Building Techniques

DESCRIPTION: Rocks with some sort of filler could be used for road building. In the tropical forest, trees could be cut and placed side by side. Road levelling and maintenance could be done using scoops, shovels, and scrapers with animal traction.

NAME: Village Composting Project

DESCRIPTION: One way to introduce composting to a village would be to train one villager in composting methods and its utilization. He would be equipped with a wheelbarrow, a few buckets, a shovel and a pitch fork and paid a small stipend on a one year contract. His job would be to collect all organic wastes from the village, particularly feces and manures along back walls and alley ways. Waste paper, plant material of all kinds and any other organic wastes would all be collected with the shovel and taken in the wheelbarrow to a vacant lot or open space just outside the village that is reasonably near a source of water. The materials would be wetted down and stacked up in large piles to compost. Each pile would be turned and mixed at least twice during its first six weeks to afford maximum treatment and then allowed to mature another four or five months. Some of the finished compost could be used in transplanting tree seedlings around the village. The compost holds moisture and promotes more rapid root growth so the seedlings have a better chance of survival. When planting season comes, the remaining finished compost would be spread on half of a nearby field to demonstrate its effectiveness. Within a year, the concept should have proven itself, but another six months or so of subsidy would probably be necessary. See also "Compost Privies" under Water and Sanitation AT suggested for transfer to Bolivia, below.

NAME: Composting Hotbeds

DESCRIPTION: A hot bed is a low greenhouse-type structure used for starting seedlings during cold weather. Its side walls are low, usually only 40-60 cm. high. The roof is a transparent glazing material like glass, plastic sheet, or fiberglass. Sunlight enters and the heat is trapped. Sunlight is absorbed by the interior mass (soil, plants, walls, etc.) and re-radiated as long wave radiation (infrared) which does not penetrate glazing. There is still convective and conductive heat loss through the walls and glazing to the outside air.

A pit is dug in the floor of the hot bed about 50-60 cm. below grade. This is filled with fresh compost which has been made up in a large pile (2m. x 2m. x 1m. minimum) and allowed to heat up for a week. Two or three wooden rails or poles are layed over the compost to support the seed flats which are shallow wooden trays usually 50 cm. x 60 cm. x 10 cm. The seed flats are filled with a potting mix which is usually some blend of sand, rich soil, and well aged compost and the seeds are sown in them.

The compost continues to decompose, producing heat and carbon dioxide which makes a good starting atmosphere for plants. Hot beds can keep the outside temperature well above freezing even during freezing, snowy nights. They were developed in Germany and northern France, where the compost was made in piles large enough to heat up. The pile should be turned once after 3 days and then mixed again on the sixth day before loading into the hot frame.

Bolivian hot beds could be made of adobe blocks with corrugated fiber glass glazing, and some sort of wooden frame to seal out infiltration of cold air around the joint of the glazing to the walls. The glazing must be opened easily for access and some provision made for ventilation during sunny days to prevent over heating. The use of hot beds allows starting seedlings early for planting earlier in the season.

NAME: Compost as Fisheries Food

LOCATION: Proposed for Purnea and the Bihar, India

DESCRIPTION: Potential uses for compost collected from human wastes include a nightsoil element added to conventional use of manure spread for fields and composting hotbeds. Composting hotbeds are described above in the suggested AT in Agriculture Section in Chapter III. Another alternative use of compost derived from human wastes is for fish food in special ponds-set aside for fisheries and not used for other purposes such as washing clothes, human water supply or animal water supply. This special purpose use of human waste compost can lead to an immediate payoff, if the fisheries are properly established and maintained. This suggestion follows the model of an integrated system of water and sanitation developed by Tim Journey and his colleagues for India.

NAME: Additional

DESCRIPTION: Additional suggested agricultural AT items include:

- Straight-edged sickles
- Chains pulled by animal traction for weeding in irrigation canals
- Simple animal traction peanut lifters
- Double edged knife for brush cleaning
- Sock insecticide or fungicide distributor
- Simple pesticide applicator using old cans, old innertube and nails

- Mobile repair units for small sprayers
- Simple potato classifier
- Diversification with milk cattle, perennial crops such as coffee, cacao, and citrus, and/or pineapple production

CHAPTER FOUR: RURAL SMALL SCALE INDUSTRY AND ARTISANRY: SECTOR OVERVIEW

BACKGROUND

The Ministry of Industry, Commerce and Tourism officially designates as "small scale" an industry having fixed assets between US$2,000 and US$50,000, excluding land and buildings, and employing between five and twenty-five persons.Industries with less than US$2,000 and employing fewer than five persons are classified as "artisans". Artisanries are classified by the GOB as Typical, Folklore, Artistic, Utilitarian and Services.

Industrial enterprises which have more than US$50,000 in fixed assets or employ more than twenty-five persons are classified as medium or large industries. These definitions were established in 1974 and have not been revised to reflect inflation or current monetary values.

While the inappropriateness of official definitions of Small Scale Industry and Artisanry has policy implications in terms of whether a particular industry may qualify for incentives or special programs and in terms of classifying the industry, under any definition, Rural Small Scale Industry will not be noticeably affected until the Government of Bolivia's hierarchy of goal priorities is revised to promote rural small scale industries.

Bolivia's rural industry is even less developed than its urban industry, which is recognized as being in an early stage of development. Much of the non-farm rural production remains restricted to cottage or subsistence production in an informal sector. The products of cottage industries are usually traded for other subsistence products. Some of these products do have commercial value and may enter the commercial market through various intermediary channels. It is noteworthy that some subsistence products are even traded in the international markets, such as the traditional weavings from Chuquisaca and Potosi Departments.

The forms under which rural industries are organized include:

- Community artisanal nucleus: a large number of artisans dedicated to a specific craft, e.g. potters, weavers
- Family work unit; using time free from agriculture for production for subsistence or sale/barter at local markets
- Individual specialist, who may work alone or hire helpers to satisfy community needs for a particular product or to sell in rural markets
- Cooperative or other forms of producers' association which may incorporate any of the other forms listed above.

Only rarely is a rural industry organized as an enterprise which resembles a factory or which offers contracts of employment to the rural labor force. In general, the rural non-farm workers are "autonomous" artisans or groups without formal legal structure or legal recognition.

The most common arrangement is the artisanal workshop within the home.

Already of substandard living conditions, the home is then subjected to the additional hazards of dangerous chemicals, tools, and activities. Such materials as acids, dyes, inflammables, lead oxide and glazes were found being used and stored in the same areas for food storage and food preparation. During one interview, an infant placed a razor-sharp tool in its mouth.

Under crowded conditions, different production processes are hazardously situated, often in conflict with or in competition for facilities with ongoing household activities. In some cases facilities and equipment must be continually unmounted and reassembled in order to provide for dual utility of available space.

If the industry requires more space or separation from the household, an improvised shelter may be attached to the home or located nearby. Again, however, such basic concepts as plant and equipment lay-out, time, motion, comfort and safety are not only totally lacking, but unknown, as evidenced by the fact that few artisans indicated improved production facilities and work conditions among their felt needs.

Group production and the sharing of common facilities are rare, although a few such facilities have been provided by various organizations, generally with some alternative motivations which inevitably detract from their productive utility. Notwithstanding, artisans of the Cochabamba Valley who have experienced group production definitely demonstrated a greater awareness of their productive surroundings and were the only artisans to mention the need for better work areas and conditions. (It should be pointed out that the Cochabamba Valley social structures and organizations are not necessarily typical of other rural regions).

By Bolivian standards, the rural artisans' workplace and conditions of employment are considerably below acceptable levels. From the technical standpoint, they are totally inadequate and inappropriate for the activities they house.

The major rural industry products being produced for commerce are traditional artisan consumer goods and handicrafts. Farm related industries such as the cottage industry production of cheese and chicha (corn beer) are abundant; however, food processing industries in general are confined to the urban industrial complex.

What little rural industry that does exist tends to concentrate within the larger rural communities, especially those within easy access to the urban centers. This characteristic appears to be as much a factor of the urban merchants' access to the rural labor force as it is a factor of the producers' access to markets and raw materials. This is particularly true of handicraft production.

The major means by which rural producers commercialize their products include:

- o Sales at rural or urban marketplaces
- o Sales to intermediaries and agents
- o Orders from consumers
- o Contracts with organizations which provide raw materials, extension of credit, product design and standards, and low level technical assistance--a more recent channel

The commercial sector exercises dominant controls and management over the artisans' means of production. Many of the handicraft industries have been established and developed by both profit and non-profit commercial entities located in the major cities.

The contract form of commercialization reflects a very low stage of industrial development but it reflects the highest level yet attained in rural production. It is the closest the private sector has come to direct investment in rural industry without taking the step of establishing a legal and true industrial/commercial enterprise entity in the rural area.

Given the existing GOB incentives, legislation and priorities with regard to Small Scale Industry, and given the high risks and low performance of existing rural industries, it is doubtful that the private sector will establish such enterprises without a demonstration of the viability and financial feasibility of such industries. Unfortunately, the non-profit development community has merely followed the private sector, mimicking its structures and methods. These structures and methods have created a bottleneck for development. The Small Scale Industry/Artisan sector is at present stagnant.

INSTITUTIONS

There are very few institutions and organizations which presently deal with rural industry development. There are no institutions or organizations operating in Bolivia which are structured for the sole purpose of providing development assistance to rural industry or which place such assistance as their top priority. Of the organizations that do deal with industry, none have broad scope action projects and few employ even the most basic concepts of appropriate technology or appropriate development.

Given these constraints, there are encouraging signs that many of these organizations would be open to implementing AT in their programs if they were provided with a proper program structure and assistance in strengthening their internal structures. Many of the technical staff of these organizations were quite frank: "We need technical assistance." Many of the administrators, while quite defensive, are well aware of the shortcomings within their own organizations and demonstrated an openness to new ideas and concepts. The organizations most fully aware of the concepts AT were the private voluntary organizations. Two were found to be dealing with rural industry, several others were applying concepts of AT in rural areas, and others had plans to become or interest in becoming involved with rural industry.

The following institutions and organizations were among those surveyed (see Institution Section for details): INBOPIA (Bolivian Institute of Small Industry and Artisanry), INFOL (National Institute for the Development of Wool), DESEC Group (Center for Social and Economic Development), La Kochalita Cooperative, Departmental Development Corporations, FOMO Institute for Labor Training, CIM (Consortium of Inter-American Women), Mennonite Central Committee, Q'Ante Cooperative (see International Voluntary Service, and Office of Science and Technology.

ISSUES

HUMAN FACTORS

From the point of view of Appropriate Technology, the human factor is by far the single most important factor in production. From the point of view of Appropriate Development, artisans and their communities are the beneficiaries of AT, not industry. The development community must be constantly reminded that the objective is not to develop rural industry, but that rural industrial development is one means to provide conditions for the development of the rural population. Any future development of rural industry will depend as much on identifying and understanding these human factors as upon any other considerations. Some points for further study include:

- Craftspersons' low self esteem: The rural artisan's attitudes toward self and work have been partially formed over the centuries by a ruling class which placed a low value on manual labor. While these attitudes are changing gradually, they are a constraint on the artisan's access to the market. The artisan is constantly reminded that artisanal activity is reserved for the underprivileged and marginalized sector of the national society. (See Wayne Frost, Appropriate Technology for the Bolivian Rural Artisans and Their Industries, December 1979, p. 19 for examples).

- Consumers' preference: The rural consumers express a preference for industrial goods, but buy hand made goods because these are all they can afford.

- Levels of craft skills and creativity: In some of the isolated areas where different traditional values towards manual labor still survive, we find quite excellent skills and craftsmanship being applied. However for the most part, these productions which exist in the informal sector cannot be directly transformed into viable industries in the formal sector. The attitudes which exist, however, provide the potential for new industries. Where artisans have maintained or restored the knowledge and understanding of their art, they have demonstrated their creative abilities, not merely the ability to learn and perform simple skills.

RURAL ARTISAN INCOME

Even by Bolivian standards, the income and standard of living for rural artisans are considered very low and are much below that enjoyed by industrial workers.

Due to the nature of rural industry, any meaningful estimates on personal income derived from production would have to be based on extensive production analysis.

As far as Wayne Frost could determine, no serious efforts have been made in this regard. What estimates that were provided were found to be totally void of useful application.

Many of the larger commercial establishments, including the private and public sectors, do maintain relatively reliable cost data from which unit labor costs and the labor costs of production can be determined; however, none of these organizations know how many hours, how many artisans, or even how many intermediaries are actually involved in production.

In the Cochabamba Valley, 250 artisans representing a cross-section of the regions' handicraft artisans indicated that the highest average wage they could expect from their activity was less than US$0.30/hr. Production and sales records of various groups representing the production of over 2,000 artisans would indicate an average income of less than US$20/month.

Some of the factors found to obscure accurate estimates on income include:

- While the artisans are officially and legally recognized as autonomous workers, their production and means of production are often under the control of commercial entities located in the cities. (This is particularly true of handicraft industries). As there is no payroll or legal obligation toward the artisans, the only concern is with the unit labor cost of production as, in effect, the artisans are paid by piecework. This practice is just as true with coops, GOB institutions and private non-profit organizations as it is with the private sector.

- The artisans themselves keep no records of their time and have no concept of the actual time spent at production.

- Many artisans job-out work to their children and families. In some cases, the activities performed are considered household obligations rather than a contribution to production.

- Some artisans act as commercial intermediaries themselves, and what is received and recorded as the production of a single artisan may in fact represent the production of many artisans.

- Included in the piecework calculations classified as labor are often included additional costs such as packing materials, transportation, replacement of tools and equipment, etc. The artisans themselves generally do not consider these as costs of production either. One very common situation which results is that when an artisan receives an unusually large volume order, he will quote a higher unit price. The reason is that with the higher volume of production, the costs he did not consider before now become sharply evident.

- When questioned or surveyed the artisan will provide the answers he feels best represent his interests. One group estimated that it took 30 hours to knit a sweater when calculating price structures, yet when it came to receiving work orders they indicated they could knit three a week.

Artisans express a frustration with their low incomes by charging that unscrupulous intermediaries exploit them by suppressing prices paid to artisans, by gouging

excessive profits, and by enslaving the artisans under their control with deception and coercion. Government and international institutions, church groups, private voluntary organizations, non-profit centers and even cooperatives and other forms of artisan-based enterprises are all so charged.

Are these charges myth, half-truth or fact? Those who make the charges have not bothered to confirm them. As a result, actions taken to eliminate exploitation have lead to defacto exploitation more serious than the exploitation set out to be eliminated. (See La Kochalita-Institution Section, below).

PRODUCER COOPS AND ASSOCIATIONS

The acid test to determine if a producer coop or association is actually a coop or merely a commercial enterprise in disguise is to ask its members: "Where do you sell your products?" Unless the Bolivian artisans have devised a way to make a living by selling their products to themselves, then most coops failed the test by responding: "We sell to the Coop."

Another test is to ask how many members the coop has. In several cases the margin for error of the rough estimates alone exceeded the limits for achieving the coop principle of self-management.

The large Artisan Coops and Associations (over 60 members) tend to be mere commercial service organizations, not producer groups. For the most part, these centralized organizations had been prematurely established before the individual production units were allowed to develop their own individual socio-productive structures and self-management capacities. They are also not central coops for these same reasons. Because of the poorly developed structures of the individual units, there is nothing to centralize. The coops, having been structured from the top down, require outside management. Membership participation is mostly on paper only. Most are characterized not by group participation but by dominance of one strong individual.

There is no denying that these organizations have made a valuable contribution towards development. It is questionable, however, that they serve any usefulness as a model for future replication due to the constraints they place on producers for developing a higher level of their own organizational and management skills.

The term "disloyalty" was often expressed by coop managers, institutions and commercial establishments, especially with regard to artisans producing handicrafts.

The version of disloyalty expressed refers to a long history of individual artisans and entire groups who switch "loyalties" from one organization to another. Reasons given for this disloyalty included charges of coercion and political interference by competitors.

These waves of "disloyalty" can generally be traced to supply and demand factors and fluctuations in capital flow, such as when an institution receives a new loan or program, when a new intermediary appears, or when an organization experiences management or sales problems.

From the artisans' viewpoint, it is not a question of being disloyal, it is only a matter of seeking employment security. To the artisan there is no distinction between working for a coop, a GOB institution, a non-profit institution, a private commercial establishment, or an exporter or intermediary. All provide more or less the same wages for piecework, the same services and the same conditions. When those conditions get bad enough, they switch "loyalties" when the opportunity arises.

One means of securing loyalty has been to employ all the members of a family, including children. This effectively breaks down the traditional system by which rural families distribute their members' labor into a variety of activities, pool their returns, and thus insure themselves against individual unemployment. This "incentive" has been used by persons very familiar with the rural peasant social structure. Another incentive has been to provide artisans with a savings account and credit fund which is added to from piecework wage withholdings. When an artisan wants to quit, he finds that a substantial portion of his savings revert to the credit fund and he cannot afford to quit. Some quite legitimate incentives and benefits may be provided, but all at high cost, out of the pocket of the artisans.

Many of the established organizations have applied various means in an attempt to resolve the loyalty problem. None of these "incentives", however, have benefited the artisans.

PRICING POLICIES AND STRUCTURES

Owners or managers of Artisan industries were shown to lack knowledge of even basic concepts of cost analysis, cost control, and pricing policy. Often prices are established by the going rate, and if the new producer can survive on his first try, he is in business; if not, it is back to the fields.

In other cases, the prices are established by intermediaries and commercial establishments and the artisan is given only the choice of "take it or leave it."

But perhaps the most obvious deficiency in understanding the concepts of costing and pricing is shown by the non-profit sector involved in development efforts. Practices found to be common to this group included:

- Mislocation of Incentive: It was found that tax exemptions, exemptions from payment of social security, worker benefits, and others, were all being channelled to the sole benefit of the commercial establishments under direct management of the non-profit sector. There has been no attempt to structure these incentives under a pricing policy along with a program to increase productivity appropriately so that these incentives might rightfully benefit the artisans for whom they were intended. The prevailing concept is that these incentives should be applied only to reduce prices and, in turn, the artisans receive the benefits from more competitive prices.

- Short-Sheeting the Producer Groups: The non-profit sector generally organizes artisans into small formal or informal cooperatives or associations. The marketing functions, however, are separated and centralized either as a separate legal entity under direct management of the supporting organization, or under its indirect or absolute control as pseudo-associations

of member producers. In either case, the artisans' organizations are not producer groups at all, but merely labor pools of the central marketing organization.

ACCESS TO RAW MATERIALS

The raw materials utilized by the rural artisans are generally of low quality, inconsistent standards, and are often incompatible or inappropriate in combination with the other materials, processes and skills applied in production. Often accessories to the finished product are crudely fashioned or left off for the consumer to finish.

The artisan's lack of purchasing power in the market, lack of bank financing, and lack of knowledge of the concepts of purchasing and production management place the artisan at a disadvantage in purchasing raw materials. Suppliers first attend to their larger, steady clients who hand select their purchases. Artisans get what remains, or must await the next shipment. Raw materials which are extracted and gathered by the artisans are poorly selected for lack of technical know-how, lack of access, and lack of access technologies. Farm related industry is often subjected to a poor quality agriculture product which, as a raw material, can only result in a substandard finished product.

Few of the raw materials are pre-processed. The artisans themselves lack appropriate technologies for the extraction, transportation, storage and processing of raw materials. This accounts for high wastage, low quality and often higher labor requirements for raw material processing than for production of the product. The labor utilized in these processes is manual, non-skilled, and often engages child and family labor which is not calculated into the cost of production.

The best example of this problem can be found in the hierarchy of access to raw wool. Wayne Frost informally estimated that INFOL (see Institution Section) controls 22% of the alpaca wool market and 30% of the llama wool market. Smugglers (contrabandistas) selling to Peru control another 22% of the alpaca wool market. FOTRAMA (see remarks under INFOL, Institution Section, below) controls 17% of the alpaca wool market; ANDEA another 11%. The rest of the market for these highly desired wools is divided among Artesanias Titicaca, INBOPIA, DESEC/AMERINDA (see Institution section)and other larger exporting concerns and, finally, the rural artisans.

FINANCING

The most common felt need expressed by the artisans interviewed was credit. Seldom can a rural artisan or enterprise qualify for bank financing due to lack of collateral, business records, and the educational levels needed to fill out lengthy and complicated forms.

At El Torno, Santa Cruz, a cottage industry broom handle manufacturer was totally aware of the fact that his gasoline engine driven machinery was costly, inefficient, and subject to break-downs, but he explained that he could not afford the installation cost to hook up to the electrical lines that passed in front of his house.

The most common means of acquiring financing is by direct loans from individuals, suppliers of raw materials, down payments from buyers, or contracts with commercial intermediaries. In a small rural settlement in the Cochabamba Valley, a rug maker

was found packing a shipment of rugs for export to Brazil, which had a commercial value over US$30,000. He had to depend on a commercial intermediary for financing his production, as his total assets were worthless as collateral for bank financing. All these methods of financing are not only extremely costly, but they allow for the continued survival of the artisan's substandard production methods and living conditions.

Another form of financing is through cooperative, GOB, and private non-profit commercial enterprises, principally to finance handicraft production. This type of financing, however, has been grossly misdirected by a marketing policy which is more often in conflict with development goals.

Although the artisans indicated availability of credit as one of their primary needs, few were found to be equipped to employ and manage credit in a manner appropriate for their development interests. When asked how they would utilize credit, most artisans indicated that they would merely sustain production under their existing facilities and methods.

Generally, they would merely buy a larger volume of raw materials, perhaps replace a few worn out tools, and expand production by producing more of what they were already producing. One group that did manage to receive financing to expand production for export was totally unaware that their product could not possibly compete on the international market.

What the artisans often were expressing when they indicated their greatest felt need as being access to credit, was their desire for greater stability and security of employment, and freedom from their traditional sources of financing. To achieve this, the majority of rural artisans need much more than the mere availability of credit. They need supervised credit, assisted by technical, social, organizational and management guidance and training.

In conclusion, it was found that the separation of the marketing and production functions, value structures, and socio-cultural factors, and not the technical or economical considerations, presented the major constraints on the level of skills and craftsmanship being attained by rural artisans. These factors, and the lack of understanding of them, have also influenced the choice of technologies to the advantage of the commercial interests.

SMALL SCALE INDUSTRIES AND ARTISANRY AT INVENTORY

CURRENT AT IN RURAL INDUSTRY

NAME: Wool Handling Techniques

DESCRIPTION: Hand spinning techniques principally use the "huso". Spinning wheels are seldom employed, and usually only in connection with rug making. The reason the spinning wheel has not been adapted is that wool spinners are accustomed to spinning while working in the fields, tending flocks, selling their goods in the marketplace, or even while walking. Spinning machines are restricted to a few spinning operations in the urban areas.

Usually the wool is not pre-washed. Sheep wool skeins of spun yarn are generally washed before entering production. For Alpaca and Llama wool, washing occurs once the final product has been finished. After washing it is then hand ironed and cleaned by hand, picking off knobs of matted wool and foreign objects. As with spinning, the artisans do their handknitting anywhere they go and the product gets quite dirty before being finished. Loom weaving, while stationary, is also often done outdoors.

Carding is done by hand using a quite appropriate technology made of thistles.

NAME: Technical Skills and Craftmanship

DESCRIPTION: Within the formal commercial sector, the technical skills employed are, for the most part, basic rudimentary manual skills which are seldom developed beyond minimal levels of perfection. Where higher level skills and perfection are demonstrated, they are often inappropriately utilized in production so that these higher skills are nonapparent in the final product. When we do find a high quality product, it is generally not the artisan who is benefiting from his skills, but a commercial enterprise.

Upon examination of the rural products we find that they lack what master craftsmen refer to as "integrity." This lack does not reflect so much the low level skills as it does the artisans' general lack of knowledge of and personal identify with his raw materials, tools and skills, and their interrelationships with one another and with the final product.

The fact that the artisan has not developed a high level of perfection, even in applying low level skill, does not reflect an incapacity to learn and perform, but rather the artisans lack of the basic concepts of craftsmanship and what craftsmen refer to as a "spiritual" relationship with their work, or what industrial sociologists refer to as "swinging".

NAME: Horizontal Ground Loom

LOCATION: Yura

DESCRIPTION: See AMARU IV, 1979, page 43.

NAME: Pottery Making Techniques

DESCRIPTION: Two appropriate technologies are the widely used coil loaf, and the lesser known potters wheel.

NAME: Traditional Crafts and Tools

DESCRIPTION: Other crafts and manufacturing processes include:

- Charcoal making (See AMARU IV, 1979, page 44)
- Beer brewing (See AMARU IV, 1979, page 47)
- Grinding and milling tools (See AMARU IV, 1979, Plate 8)
- Brick making (See AMARU IV, 1979, page 125)
- Straw weaving (See AMARU IV, 1979, page 125)
- Preserve making (See AMARU IV, page 125)

SUGGESTED AT IN SMALL SCALE INDUSTRY AND ARTISANRY FOR TRANSFER TO BOLIVIA

NAME: Mining, Extraction and Transportation of Clay

DESCRIPTION: In many cases even a shovel could be considered an intermediate technology offering great advancement over existing technologies applied to extraction. Also, new technologies are badly needed for prospecting and identifying higher grades of raw-materials and for their classification and separation.

Required are on new transportation technologies for transporting the raw-materials from the extraction site to the site(s) of production and appropriate storage technologies once they get there. These processes are presently wasteful, inefficient and require vast amounts of labor which produces very little, and in many cases, no income whatsoever.

NAME: Firing Technologies

DESCRIPTION: Above-ground firing techniques are widely practiced, using no kiln whatsoever What kilns do exist are often the open top variety. Even where acceptable levels of temperature are reached, it is done with an extravagant use of scarce energy resources. Appropriate kiln designs should be introduced.

NAME: Product-building Techniques

DESCRIPTION: While the coil loaf technique is most widely used, the potters wheel is also known. Both techniques are equally appropriate and the artisans have shown quite good levels of skills at both technologies. Appropriate technologies should be applied which will allow the artisan to achieve the highest possible skill and mastery over these techniques.

NAME: Plant Layout

DESCRIPTION: Whether home production, shop or central production facilities, there presently exist no concepts of the basic principles of industrial engineering, industrial sociology or plant layout. Appropriate technologies applied in this respect would result in considerable benefit to the artisan and their industries.

NAME: Product Design

DESCRIPTION: Designs of existing products are functional and quite adequate given production conditions. Along with the higher-level technology will appear new options and opportunities for production and will require new attention to product design and standardization of sizes and quality.

NAME: Surface Designs and Techniques

DESCRIPTION: Form follows function, and as the ceremonial and cultural functions of design have disappeared, so have most of the traditional surface designs. One exception is in the revival of the Tiawanaku designs. In this case the function is decorative/commercial. But it has another function. This is one of the few examples of artisans restoring the function of being guardians of the secrets and knowledge of their culture. It is the first example of a Bolivian folklore in the process of revival. Restoring knowledge to the people is an AT which has much more impact on development than the mere function of decoration.

NAME: Filtered Water Storage Unit

LOCATION: Brazil

DESCRIPTION: In Bolivian rural communities, water is usually stored in ceramic pots or in discarded five gallon tin cans. The advantage of using wells is undermined by the subsequent unsanitary storage of drawn water. Several simple types of filtered water storage units can be made by local potters. These designs build and improve upon the custom of storing water in pots.

A more elaborate model requires two nested ceramic pots and a lid made on a potter's wheel. From one to four ceramic filter units or "candles" are inserted in the base of the upper pot. These candles filter water into the bottom tank. Water is drawn from the lower tank through a spigot. The spigot may be made locally of wood or bamboo; commercial metal models are also widely available. The nested ceramic tank filtered water storage unit made with potter's wheel technology sells in Brazil from about US$1.50. Figure IV-1 and VI-2 C illustrate this model.

A second model uses pottery made with the coil technique. Two traditional water pots and a separate base are modified. The base of the upper pot has a ceramic water filter candle inserted or is lined either with a filter of sand, gravel and charcoal or with porous sand and a cement filter.

The curvature of the pot walls in some traditional designs may make the insertion of commercially made spigot difficult.

This problem can be solved by the potter designing a correctly angled shape, by making appropriate spigots locally or by increasing the height of the base. Models of thsi type without filter candles sell in Brazil for about US$1. Two possible designs, based on hypothetical traditional water pot shapes, are shown in Figure IV-2 A and B.

An extra advantage of the water storage unit is the coolness of the water and, to some tastes, the improved flavor the ceramic pots give to the water. The unit remains cool. In Brazil, perishable food is often stored behind the filter water storage unit which functions as "a poor man's refrigerator."

Figure IV-1
Filtered Water Storage Unit
with Nested Pots Made on a Potter's Wheel

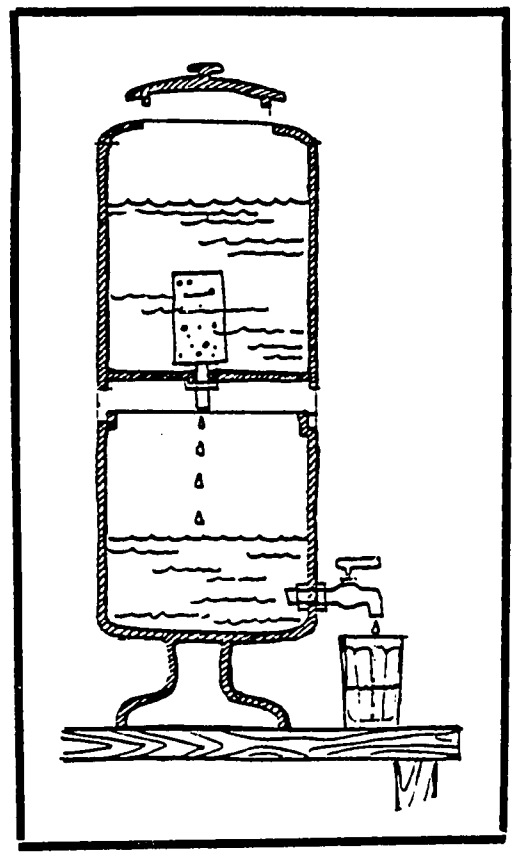

Figure IV-2
A and B: Filtered Water Storage Units
Made with Traditional Coil Technique Water Pots
C: Filtered Water Storage Unit with
Nested Pots Made on a Potter's Wheel

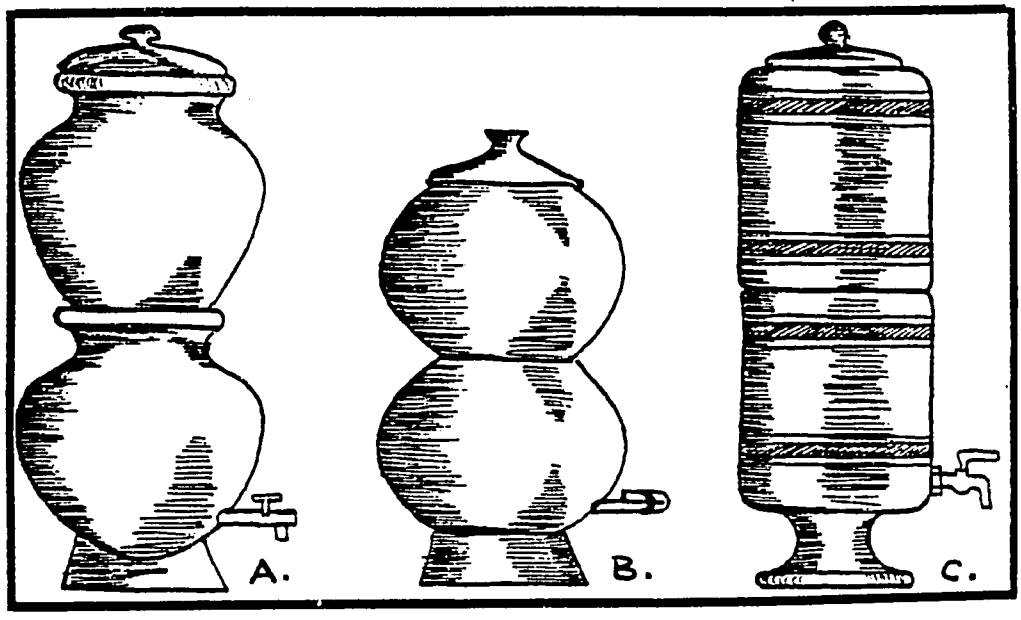

To adapt this new technology for introduction in Bolivia, test filters, including imported Brazilian models, and models designed to use existing technologies, should be selected for their appropriateness for local production. The following framework is suggested.

The first step should be to survey and test the extent of the potential market, consumer acceptance and project methodology. For this purpose four or five test communities, three or four rural market places, and one urban market place should be identified and selected. The study should also include identification and pre-feasibility of potential industry communities for production of the filters.

One of the communities would be selected principally to test the project distribution and education methodologies. A group of at least 40 families should be selected. It would be preferable to select a community which already has a formalized group such as a mother's club or a cooperative that is already familiar with the institution responsible for implementation.

The other groups will serve to test consumer preference and reaction to the new technology. The second step would be to demonstrate and offer the test filters for sale at the markets at their full commercial value based on local production costs.

Not counting planning and preparation time, the implementation of this stage of the project should take no more than three or four months.

Upon completion of that phase of the project, the appropriate models for production and the pilot industry community will be selected.

NAME: Glaze Substitution

DESCRIPTION: The first step in glaze substitution would be a survey to verify the extent and scope of the existing health hazard, and to identify the principal production sites and their principal markets and consumers.

Next, a chemical analysis to determine the contamination rates and levels of a cross section sample of the offending products would be carried out. If this cannot be performed in Bolivia, samples would be shipped to an appropriately equipped laboratory for analysis.

Techno-economic evaluations of the options for appropriate substitution would then be made.

In order to determine which additional ATs might be applied to other sectors or to production for the greatest benefit the producers and their communities, and which might be most replicable, techno-economic and sociological studies would be done.

Implementation of glaze substitution would require a team of specialists, including at least one specialist in pottery production to be placed in the field, and one social promoter for each site.

CHAPTER FIVE: RURAL WATER SUPPLY AND SANITATION: SECTOR OVERVIEW

BACKGROUND

The Bolivia Health Sector assessment (USAID 1975) gives the population of Bolivia as 5.32 million, of which 3.5 million (66%) is rural and 1.82 million (39%) is urban; "urban" is defined as settlements with populations greater than 2,000. An estimated 151,000 rural inhabitants (4% of the rural population) have access to a protected water supply and only about 112,000 persons (3%) have sanitation facilities (sanitary latrines or septic systems).

The population has increased at an estimated 2.6% per year since 1975; recent construction has not greatly affected these figures.

It is reported that 12% of all deaths in Bolivia in 1969 was due to lack of safe water supply and to inadequate waste disposal. Of the eight urban communities which have sewage systems (serving 420,000 people), only Santa Cruz treats its sewage. The other seven send their sewage straight into the nearest river. Thus the "sanitation facilities" of these urbanites directly contributes to the unsanitary water supply of those thousands of people down stream.

RURAL WATER SUPPLY

Bolivia is divided into three principal water sheds: the rivers that drain into Lake Titicaca; the rivers that flow into the Amazon River, and the rivers that flow into the Rio de La Plata. These extensive surface water resources are the major source of domestic water for most Bolivians. There are many endemic water-borne diseases and most sewage is discharged directly into the various waterways. Extensive treatment is required to obtain potable water from major rivers. For small rural communities, however, surface water is the most accessible and least expensive source for domestic use. Many small low cost community systems have been built using an infiltration gallery (a large, slow, sand filter built into the stream bed) for collection. Large particles of organic matter, parasites and their ova are generally filtered out, but there is little effect on bacterial levels. Chlorination is seldom used. It is either unavailable or unaffordable or simply not desired by the community.

Ground water represents the safest and possibly the most plentiful source of potable water. It would certainly be helpful to know the quality and quantity of ground water available and at what depths, for different regions. This could allow comprehensive planning for individual and community systems. Two large-scale ground water surveys were reportedly done: one in the Altiplano and the other in the Cochabamba area. More detailed information, however, still needs to be collected for the rest of the country.

Well drilling is expensive and difficult. Most Bolivian soils are rocky, and generally only the most modern, sophisticated, imported equipment can perforate it. Simple, low capital, technology can be applied in only a few specific regions. In the Altiplano areas or valley floors where the water table is within 10 to 12 meters of the surface, hand dug wells are an important potential. In the Santa Cruz region where there are deep sandy, silty soils with no rocks, tube wells may be bored with simple hand equipment to a maximum depth of about 45 meters. Other low land areas with similar soil conditions (perhaps Beni or Pando) could apply this same technique.

SANITATION

Bolivia as a whole has no commitment to any mode or concept of sanitation and waste management. It is still primarily an agrarian economy whose over-worked fields are starved for nutrients and organic matter. There is no reason for Bolivia to try vainly to copy the United States and European sanitation technology, which it can not particularly afford, when that technology leads ultimately to a system that could be achieved directly by Bolivia in a much shorter time, at a much lower cost, and without all the unnecessary environmental damage. Bolivia is prime for a sanitation policy that stresses recycling and utilization of human and domestic wastes to increase soil fertility and thereby agricultural production. Planners and engineers should stop thinking in terms of temporary or interim measures for rural sanitation and begin designing a long-term program with attainable goals.

A basic problem of programs for rural sanitation is that they are conceived of and designed by 20th century urbanites with Western middle class cultural values and mores which have little application to the rural Bolivian situation. The designers of these programs would not personally use pit latrines and they do not really believe that latrines are a useful or effective sanitation option. It is simply the only option of which they are aware. It is assumed that every one wants a flush toilet, and that that is the only technology which will improve sanitation.

INSTITUTIONS

Only three Bolivian agencies actually deal with rural water supply: the Ministry of Public Health's Division of Environmental Sanitation (Saneamiento Ambiental), the National Community Development Service (Servicio Nacional de Desarrollo de la Comunidad) and the Development Corporations of each department (see Institution Section, below). By contrast, over a dozen agencies in Bolivia work with urban water supply* and sewage. CORPAGUAS, in the Ministry of Housing and Urban Planning, is mandated to work with settlements as small as 500, but in actuality CORPAGUAS deals only with settlements of at least 2,000 residents, the cut off between "rural" and "urban" in the Bolivian census categories.

The number of uncoordinated agencies working in the same field with overlapping responsibilities creates a variety of problems and inefficiencies. There is a lack of comprehensive planning based on national goals and objectives. There is no process by which to establish nation-wide priorities as to which communities most need what services. The result is inefficient use of financial, material, and human resources and no significant improvement in the rural condition.

The World Bank/WHO reports, Bolivia Water Supply and Sewage Sector Study, May 1974, recommended the foundation of a National Sanitation Council with responsibility for sector policy, planning, and coordination. Under the Council would be a semi-autonomous sanitation agency in each department which would have responsibility

*See related study presented to USAID/La Paz for the urban situation: Urban Resources Consultants, Regional Technologies Opportunities, Bolivia: Field Visit Report (1979).

for all construction of water supply and sewage facilities within their respective departments. There was no indication that such reorganization had taken place and in most cases the various agencies were acting independently. Only in Tarija was there any indication of collaboration or cooperative action and they were merely beginning discussions there.

The cultural prejudices of the sanitation promoters is illustrated by the latrine component of the water projects being built in Cochabamba by Saneamiento Ambiental with USAID funds. The latrine slabs have no lids for the drop hole, and were designed that way. Kroschel saw three latrines, all with lids, and observed flies buzzing around and emerging from the uncovered holes. The engineer stated that it did not matter and that the campesino probably would not cover the hole even if it had a lid.

There is minimal promotional or educational effort associated with latrine building. In the case of latrine components to water projects, campesinos are required to build a latrine in order to get a house connection. The technicians are simply going through the motions and fulfilling the terms of the contract.

Private volunteer organizations generally have more success with their latrine programs. This is because they live and work more closely with the campesinos and train promoters who live right in the communities being assisted. There is more genuine concern for the welfare of the participants in the program and a desire for it to be successful. More effort is therefore placed on promotion and education, particularly by example.

Plan de Padrinos (see Institution Section, below) has an active latrine program around Sucre as part of their medical service program. The doctor, nurses and promoters are all native Quecha speakers, which greatly facilitates communication.

However, the Plan has a specifically defined clientele. The program is adequately financed, and there are atypical inducements and peer group pressures for compliance. The Mennonites train rural health promoters in their villages to promote latrine building, personal hygiene and nutrition as well as to provide paramedical services. They have had some success with the latrine program but they are not overly optimistic about the long-term effects.

The Montero Rural Health Program reports an average of 40% participation in latrine programs in areas where their health promoters are well established and paramedical services are being provided.

Saneamiento Ambiental does not claim much success at all. They have impressive charts of the number of latrines built per month by their various provincial promoters, in compliance with certain directives and quotas from the Central Office. However they readily admit that the facilities are often used for chicken coops or storage bins after the initial novelty wears off and their owners return to their traditional habits.

There are many areas of rural Bolivia where pit latrines are not practical even if they were to be utilized. The heavy rainfall in the Santa Cruz area causes seasonally high ground water which sometimes reaches the surface. The Mennonite Central Committee (MCC), Montero Rural Health Program and Saneamiento Ambiental all reported problems

with pit latrines occasionally flooding out during heavy rains; some of them even collapsed as the holes caved in. Under these conditions latrines can cause contamination of ground water and become breeding grounds for mosquitoes. Engineers with Saneamiento Ambiental in three other departments (La Paz, Cochabamba and Tarija) also reported high water problems in some areas where latrines were being built, and they were very interested in alternative designs.

ISSUES

TRAINING OF SANITARY ENGINEERS

The educational program for the training of sanitary engineers in Bolivia is based on concepts and techniques which were developed for Europe and the United States. There is very little information in the program relevant to the rural sector. The one environmental sanitation course is apparently limited to information from the United States Public Health Service Manual written in the late 1940s. None of the numerous low cost sanitation options that have been used successfully in other developing countries are presented. There is a vacuum of knowledge between the unimproved pit latrine and the conventional western cistern flush toilet. There is no research being done at the universities which addresses the problems of rural sanitation or water supply. Research is not coordinated with government agencies; in fact, the agencies don't even talk to one another.

Instead the program focuses on conventional design procedures for large municipal water treatment, distribution, sewage collection and treatment plants. There is only one sewage treatment plant in the country (at Santa Cruz), designed by a German consulting firm. As a result, many Bolivian engineering graduates leave the country to find the work they are trained to do, while the vital work of the country goes undone for want of trained engineers to do it. (See remarks under Universidad Mayor de San Andres, Institution Section, below).

CAMPESINOS' CUSTOMS

Bolivian campesinos are not bothered by their excrement. It is smelly and draws flies so they try to avoid defecating too near their homes. But they do not walk too far away either. Outside the courtyard along the outside wall somewhere is far enough. They relieve themselves wherever and whenever the need arises. The need for privacy is not imperative. Every wall is a urinal and every alley way a latrine in Bolivia. This attitude is a cultural inertia which must be overcome if there is to be any change in the sanitary conditions of the countryside.

The construction of sanitation facilities will have no effect without a substantial long-term education program concerning their use and maintenance. Sanitation programs, to be effective, must train local promoters from within the community who can educate by example and gain peer acceptance for the concepts being promoted. There are two basic yet radically different concepts of waste management that can be employed. One viewpoint considers only waste disposal: the concept of discharging used or unwanted materials, including human by-products, and temporarily removing them from the immediate environment. The other, cyclical, viewpoint recognizes waste utilization: the concept that the world is finite, that the materials must be used and reused, and that the waste by-products must be utilized to afford their maximum benefit without causing any detrimental effects.

A sanitation and hygiene education program can dwell on the negative. It can teach the germ theory of disease and the connection between feces, human parasites and illness and thereby preach the perils of feces. By and large, however, such information falls on deaf ears. The concept of good health is very esoteric to a campesino who has lived with parasites all of his life and knows no other condition. The cause and effect relationship between feces in the backyard and illness, or between latrine use and good health, are impossible to demonstrate. Any real results of an improvement in sanitary conditions have a gradual effect.

However, based on the concept of waste utilization, a campesino education program would teach composting as a method of dealing with all organic wastes: human wastes, animal manures including that from dogs and pets, household garbage and paper trash, any agricultural or crop residues not used for fodder, and even dust and floor sweepings. The compost pile can even receive small amounts of household waste water, as a certain moisture level is required for the decomposition process. It is easily demonstrated how a compost pile heats up during the first stages of decomposition. The importance of this heating would be stressed not because it destroys pathogens and parasite ova, which is too esoteric for the campesino, but because it destroys weed seeds — a concept a farmer can relate to. The end result of the "sanitation program" is compost: a man-made manure, an agricultural resource. The benefits of using compost can be demonstrated in one season. Demonstrating the agricultural benefits of organic wastes gives the wastes value and generates an incentive for their collection and treatment. It gives incentive to use the privy and to manage garbage and organic trash. It's a concept that makes sense in an agrarian culture that has no "fear of feces" but that, on the other hand, has had no particular use for it either. The educational and promotional effect required to overcome Bolivians' lack of sanitation consciousness will be enormous. That effort should return the maximum tangible results.

The quick disposal viewpoint is breaking down. The rivers and lakes cannot handle any more liquid wastes and the dumps are filling up fast. After 75 years of scientific high technological waste water research, the ultimate solution to the growing problem has become land disposal. After going through all the high cost, energy consuming, technological processes, waste water is being used to irrigate farm land and wood lots. Sludge is now being composted and used agriculturally, or spread on strip-mined land to reclaim it.

WATER AND SANITATION AT INVENTORY

CURRENT AT IN WATER AND SANITATION

Well drilling techniques reported below have reached the stage of replication. Techniques originally developed by Mennonite colonists and methods developed by Mennonite Central Committee (CCM) volunteers are practiced in the Committee's active well drilling program and by independent commercial Bolivian well drillers. The Mennonite volunteers require the person who wants a well to pay for half the cost of materials, which average between b$130 and b$140 per meter of well or about US$75 for a ten meter well, and to provide two or three laborers to help drill and install the well. CCM has a revolving fund which extends credit for the remainder of the materials' cost until after harvest incomes are realized and the volunteers donate their own time. Commercial well drillers charge between b$300 and 400/meter for plastic pipe cased wells, or b$4,000 to b$4,800 (=US $200-240), averaging ten to twelve meters in depth.

NAME: Mennonite Colony Shallow Well Hand Drilling Technique

LOCATION: Mennonite Colonies Santa Cruz

DESCRIPTION: A method was developed by the Mennonite colonists in Santa Cruz which uses a four to six inch (ten to fifteen cm.) diameter steel pipe about four or five feet long (1.2 to 1.5 meters). The bottom end is flaired slightly and sometimes teeth are cut into the edge. The top end has welded loop from which to attach a rope. The tube is hung from a pulley attached to a log cross bar 2.5 to 3 meters high. The pipe is dropped several times cutting into the ground, then the compacted earth is removed from the pipe and the process repeated. When the water table is reached and the soil is too moist to stay in the pipe, the well is cased and a "mud pump" is used to dig a meter or so further down.

The first two concrete tubes to go down the well are the filter tubes: concrete tubes with numerous holes drilled in them and covered with two layers of fine plastic screen attached with hot tar and wire. The tubes are lowered down the shaft on a sheet metal saddle suspended by four wires which are wound around the log cross piece. The log has two T handles (one on either end) so it can be turned slowly by two men unwinding the wire (like a winch) and lowering the tubes down the shaft. Each tube is sealed to the next with hot tar. When the tubes hit the bottom of the hole a device called a mud pump is lowered down the center of the tubes and worked up and down collecting mud and water and creating a suction that pulls the concrete tubes down further into the water hearing layer. The mud pump is a small diameter sheet metal tube about two ft. (60 cm.) long with a flapper valve at the bottom.

Figure V-1
Log T Handle Detail of Mennonite Colony Shallow
Well Drilling Technique

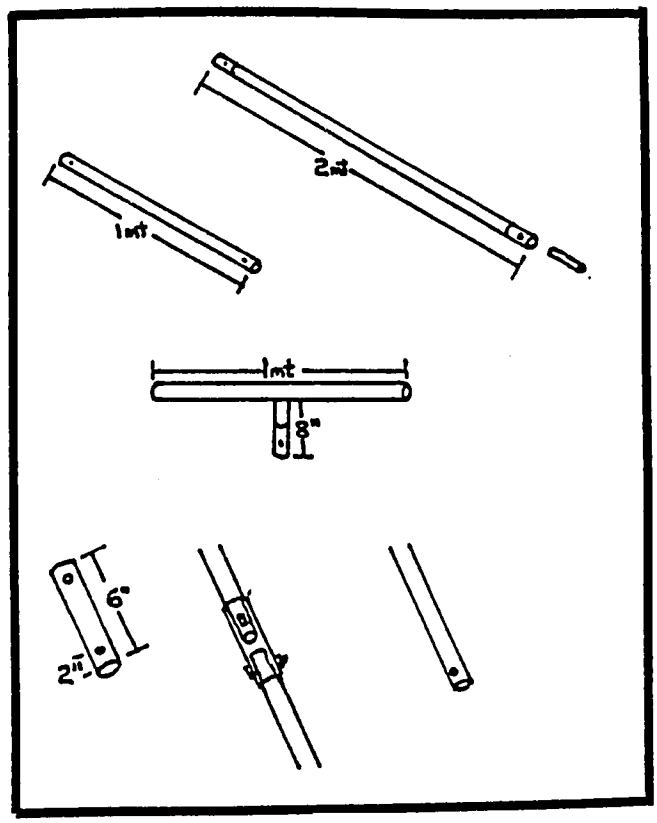

Figure V- 2
Mud Pump Detail of Mennonite Colony Shallow
Well Drilling Technique

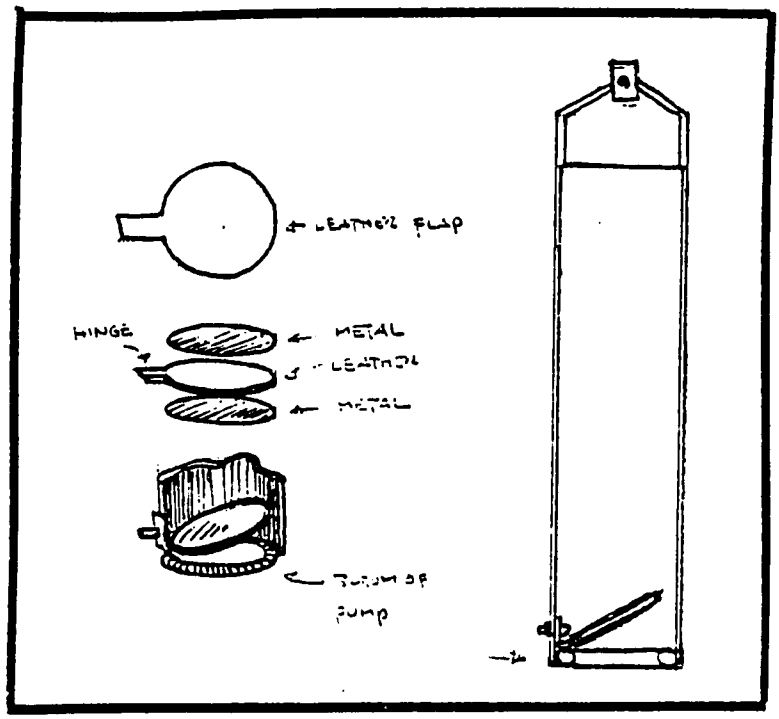

Figure V-3
CCM Dropping Bit

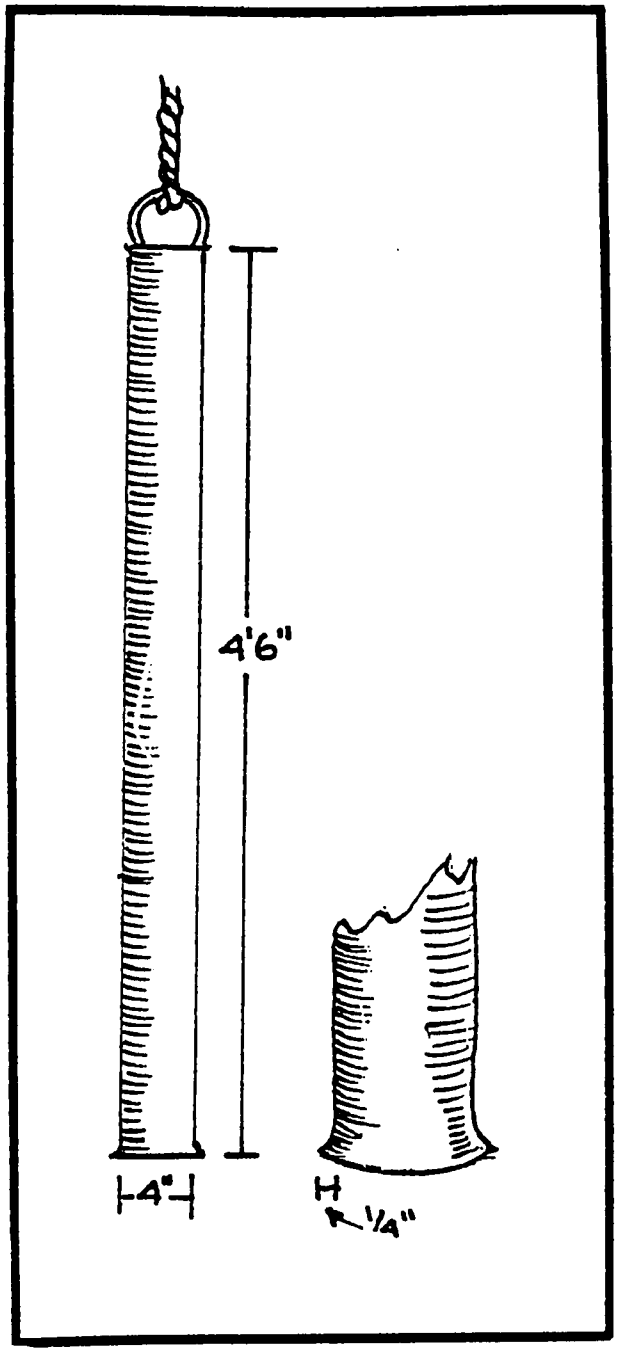

Figure V-4
CCM Clay Bit

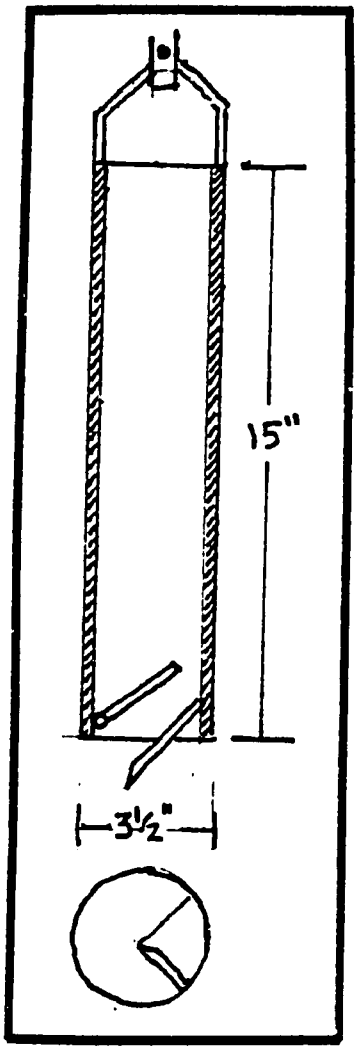

NAME: CCM Bucket Auger Well Drilling Technique

LOCATION: Comite Central Menonita (CCM), Santa Cruz, Cochabamba Chapare

DESCRIPTION: The second drilling method uses a hand turned bucket auger (similar to a post hold auger) made up at the local blacksmith shop. The central shaft is 2 meter sections of ½ inch dia. galvanized water pipe. Special end fittings make coupling and uncoupling the pipe sections an easy and rapid process. The auger is turned from above and filled, then removed from the hole and emptied. When the water layer is reached, the shaft is cased with 6 m. sections of 3" dia. plastic drain pipe and the mud pump used to work the tube another 1 or 2 meters deeper. The filter end is made by cutting thin diagonal slits in the bottom 2 meters of pipe with a hack saw. Then fine pea gravel is back filled inside and around the plastic pipe for about 2½ meters up from the bottom. There is usually adequate water pressure in the aquifer to raise the static water level 3 or 4 meters above the bottom (1-2 meters above the actual water bearing stratum).

The drilling method is limited to soft, sandy, silty or clay soils with no rocks or boulders. Fine gravel less than 3 cm. may be removed in small quantities if it is adequately mixed with clay soil to be retained by the auger. This requirement effectively eliminates most of the inhabited parts of Bolivia because they are too rocky. The method has been applied successfully within a 100 km. radius around the city of Santa Cruz and has recently been tried in one area of the Chapare outside of Cochabamba. Some areas with shallow water tables do not have potable water in the first water bearing stratum. The water has high mineral content or bad taste and odor, making is suitable for agriculture but unfit for domestic consumption.

There is generally a second water aquifer at 25-45 meters that is potable but the simplest drilling methods are unable to reach to these depths. Thus this well drilling technology could have extensive application in the Santa Cruz regions with the proper soil and water table conditions but its application to other regions of Bolivia are extremely limited by geologic conditions. The method has shown its economic viability in that several small businessmen are drilling wells commercially.

From a sanitation standpoint, the weak link is the method of extracting the water from the well. There are no inexpensive readily available hand pumps. The commonly used method is a sheet metal cylinder 60-75 cm. long and small enough in diameter to easily fit down the well casing with a simple foot valve on the bottom. It is lowered down the tube on a rope and pulley, allowed to fill through the foot valve, then hauled up by the rope and emptied into a storage container. The open nature of the well easily allows contamination. One well observed had one-half of a 55 gal. drum along side the casing for water storage. The open tank was rusty and contained dirt. Dogs drank out

Figure V-5
CCM Bucket Auger

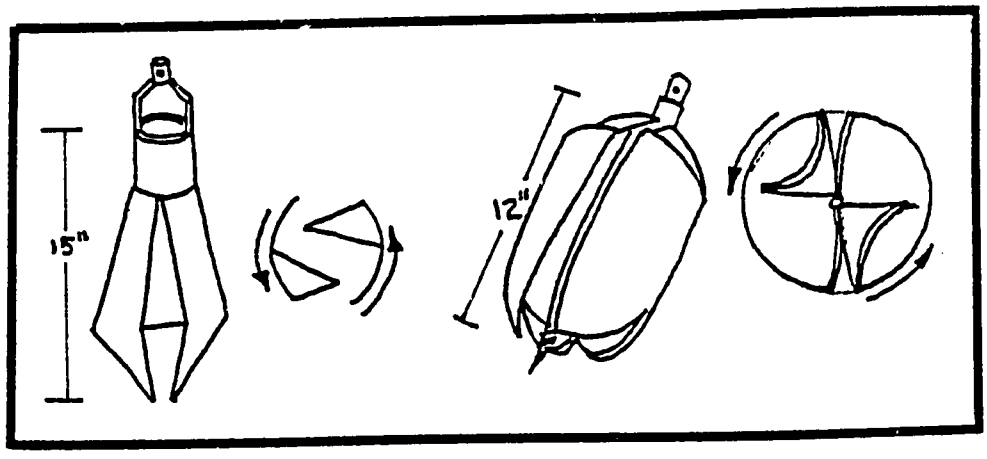

Figure V-7
CCM Water Bucket

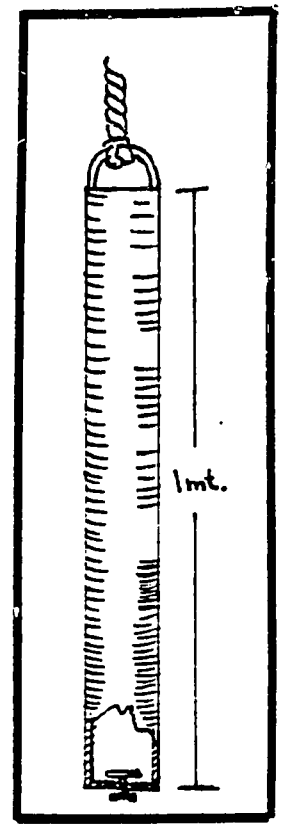

Figure V- 6
CCM Well Filter End

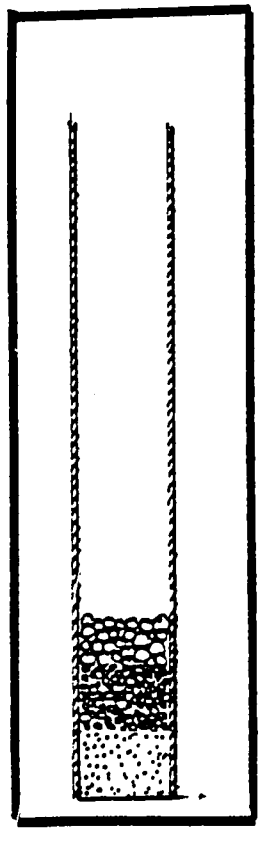

of it. To be a sanitary water source, the wells need to be sealed with a hand pump to extract the water.

The CCM drilling technology is an excellent example of AT out of the VITA Village Technology Handbook but adapted to the local Bolivian conditions. The drill bits and apparatus are all made in local shops using scrap or readily available materials: scrap plow disks, galvanizedpipe, iron rod, sheet metal and wire. A set of equipment costs about $b2,500 to make in Santa Cruz.

The earlier wells were cased with 6" or 8" dia. x 1m. concrete tubes which were made locally and the cheapest material available-- $b.50.00/meter. The newer wells (1979) have been cased with 3" dia. plastic drain pipe (thin wall) at $b.93.00/meter which is easier to install and seal. Over time, the heavier concrete tubes can continue to sink down into the hole requiring additional tubes to be added on top. If the filter end sinks down into a clay layer below the water bearing sand, the water flow into the well casing can be restricted or even stopped.

Also concrete tubes can form a bad seal with one another if the hole isn't completely straight, allowing silt or mud in to pollute the water. However, the Mennonite Colonists have been using these type of wells successfully for ten to fifteen years.

The drilling method is used around the Santa Cruz area where the water bearing layer is 10 to 15 meters deep through soft sands, siits, and clays with no rocks. The maximum depth with this method is about 20 m. It is very difficult to go more than about 2 m. deeper than the first water bearing stratum.

NAME: Henry-Prada Water Pump Well Drilling Method

LOCATION: Santa Cruz Puesto Fernandez colony

DESCRIPTION: Walt Henry, a Methodist missionary and agricultural extension agent, and Goyo Prada, a blacksmith welder mechanic, tried the method developed by the Mennonites, but found water in the first water bearing strata to be brackish and non-potable in the area between Chane and Montero. They developed a method to drill down to the second water table to get potable water.

A three faced bit is used, about 5½" in diameter. One inch or 1¼" ingalvanized. water pipe is used for the drilling stem. The 10 ft. (3 m.) sections are threaded on each end and couplings are used to join the pipe sections. The top pipe section is threaded to a special swivel fitting hung from a pulley attached to a 4 m. high tripod of 2" diameter galvanized pipe. The swivel fitting has a hose connection leading to a small irrigation pump (4,000

gal./hr.) driven by a 3-5 hp. gasoline engine. As the drill stem is turned by a handle clamped to the galvanized pipe, the pump forces water out the end of the drill bit. The force of the water helps cut into the sandy soil. There is generally enough clay in the soil to form a colloidal suspension which under pressure floats the sand and soil particles up and out the hole. Two pits are dug beside the hole about 1 meter square and 80 cm.- 1 meter deep. The water flows into the pits, the sand and soil particles settle out in the pit and the clarified water is recirculated by the pump. The force of the water keeps the hole open so that the sand does not collapse after the first water bearing stratum is passed. When the second water table is reached, a screw auger is used to ream the hole out to 7" or 8" dia. A bailer is then used to remove the remaining sandy or silty water down to the static water level. Bailing continues until the water is clear, then the well is cased. They have had plastic pipe buckle and collapse from side pressure (they were using thin wall drain pipe rather than the schedule 40 pressure pipe). Galvanized steel pipe in 3" or 4" dia. in 6 m. sections is used. If the hole collapses during casing or for some other reason the hole has to be abandoned, galvanized pipe can be reused, but the solvent welded plastic can't be.

These wells are much more expensive to drill. The initial investment in equipment is much more. The pump and motor costs about $b16,000 (US$800) and the 1" or 1¼" dia. drilling stems are much more expensive than the ½" dia. pipe used for the hand drilling. The upkeep and maintenance is more expensive. Seals on the pump have to be replaced every 3 or 4 wells and the pump rotor has to be replaced after about 6-8 wells. The pump itself wears out after 16-18 wells and an entire new unit must be purchased. More equipment requires more transportation costs and support. The Henry-Prada drill rig has a pick up which must be maintained. Water must be hauled in for the drilling: 4 or 5 55 gal. drums are needed if the soil has a lot of clay in it and up to 20 drums can be used if the soil is very sandy and absorbent. If there is adequate clay in the soil, bentonite must be added to the water. More tools are needed: mechanics' tools for truck and pump maintenance, large pipe wrenches and pipe threaders for the drill stems and pipe casing etc. Initial investment for a water pump drilling rig is about $b50,000 (US$2,500).

The drilling rig developed by Walt Henry is now owned by the Methodist Church in Puesto Fernandez. They only drill wells for Church members. They have a crew of two persons who earn a salary from the work. They estimate costs for a 20-30 meter well cased with three inch dia. galvanized steel pipe with a three meter filter element to be $b550 per meter for an average cost of $b15,000/well (US$750). This puts the cost well outside the means of most campesino farmers. The cost breakdown is approximately 40% materials, 30% labor, 15% upkeep and maintenance and 15% capitalization for new equipment. There does not seem to be much chance of cost cutting at this level of technology

(except perhaps to use thick wall three inch plastic pipe rather than galvanized steel). The Methodist crew can drill a maximum of one well per week: two or three days preparation and set up (hauling water and equipment and digging the settling pits, etc.), two days to drill and case, and another day or two for finish work, maintenance, and equipment repairs. Walt Henry feels that because it is owned by the Church and not run as a business with owners who have something at stake, it is not being run very efficiently and the equipment does not get the proper care and maintenance. The present rig dates to 1975. About 60 wells have been drilled since 1972.

NAME: Prada Well Drilling Method and Pumps

LOCATION: Montero, Santa Cruz

DESCRIPTION: Goyo Prada has a welding and blacksmith shop in Montero. He made some drilling equipment for CCM and Walt Henry. After working with Walt for a year or so he made his own rig and went into business for himself. His initial investment in 1976 was $b40,000 (US$2,000) but he made the equipment himself and had the shop and tools. He has drilled 22 wells since 1976. The average is 27-35 meters deep; the deepest was 45 meters. He uses 3 in. dia. galvanized steel pipe to case the wells. He has used plastic successfully but he was working with Walt Henry when a plastic tube collapsed so he is reluctant to use it any more. He charges $b500/meter for 3" dia. galvanized and $b700/meter for 4" dia. galvanized steel pipe.

The filters cost $b750/meter and the pea gravel used for packing the filter costs $b450/m^3. Cost for 4" dia. galvanized steel pipe is up to $b1,600 for a 6 m. section.

The second water level is under considerable pressure so the static water level rises to within 2 or 3 meters of the surface. Pitcher pumps can be used with the pump mechanism on the surface rather than submerged (relying on suction). Goyo makes some pumps for about $b1,500 (US$75), out of scrap iron and pipe. They will draw water about 3-4 meters. There are several imported pumps on the market. The cheapest is Japanese for $b1,990 (US$100). It has several interesting features. The lever handle is arranged to have a mechanical advantage assisting the pump stroke and yet keeping the load on the pump body symmetrical and vertical. The pump rod goes straight up and down and there is no eccentric load placed on the pump body (reducing long term fatigue in the iron casting particularly around the mounting bolts). The second feature is a 2-way valved discharge outlet. One way is for open discharge and the second outlet is a barbed connection for 1½" dia. poly tubing for direct pumping to a storage container or irrigation system.

Walt Henry's group has made several pumps using purchased piston and cylinder assemblies ($bl,000 - US$50.00) but assembling the pump body out of galvanized pipe fittings and using a level of wood pivoted on a stake driven in the ground next to the well casing. Their advantage is that the owner can generally repair and maintain the pump because it is so simple.

Considering the price of the well itself ($bl2,000 - $bl5,000) the difference in price between a sophisticated imported pump at $bl,990 and a home made pump ($bl,500) seems insignificant. However, the pump bodies built of pipe may be stronger and more durable than cast iron. If breakage does occur, cast iron is more difficult and expensive to repair.

There is certainly a market for an inexpensive, utilitarian, easily maintained hand pump.

Henry and Prada have also been working with a very simple hand pump (See Figure) which simply uses a strong stick as a handle mounted on a wood post for a fulcrum with the sucker rod attached to one end. Mr. Henry claims this simple design has been much more successful than cast metal or welded steel pumps in that the user can repair them when they break.

Figure V-8
Hand Water Pump

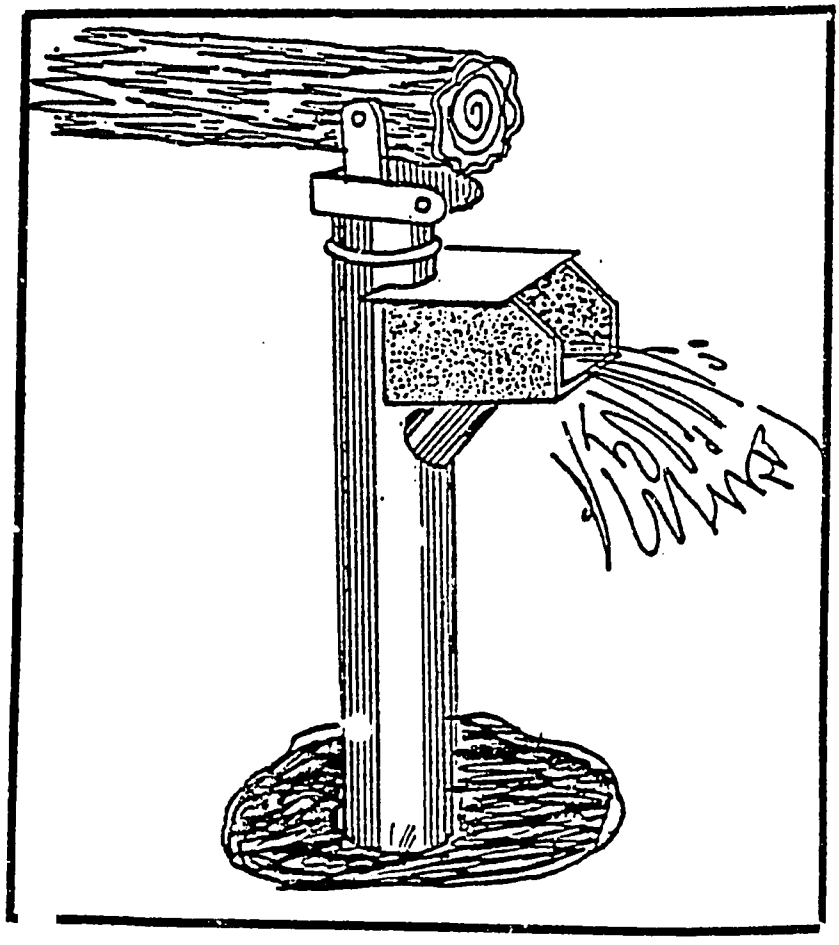

NAME: Southern Bolivian Community Water systems

LOCATION: CARE/USAID/CORDECH/CODETAR Water Program, Chuquisaca and Tarija, Bolivia

DESCRIPTION: The water systems being built fall into three different categories: complete gravity systems from springs or surface catchments, pumped systems from low surfaced catchments to tanks at higher ground, and deep wells with elevated storage tanks. The gravity systems are generally cheapest, the simplest to build, and the easiest to maintain. In some cases, however, a gravity source will be such a distance from the community that pumping water from a lower elevation catchment is more economical than the cost of the extra pipe needed for a gravity system.

An example of this are systems built for the villages Chocloca and Tolomosa. Chocloca is a small, compact little town in a narrow river valley thirty-eight kms. from Tarija. A large storage tank was built on a bluff above the town to give adequate water pressure (actual distance about one hundred meters, with elevation difference of about twenty meters). Directly below the town (about one hundred meters distance and six to eight meters elevation difference) a small pump (five hp. Briggs Straton engine was installed to pull water from a hand dug well about three to four meters deep. The system had fifty household connections serving three hundred twenty persons, for a total cost (to CARE) of $b173,243 (US$8,410). The community contributed $b62,000 (US$3,019) in local materials and labor. Tolomosa is in a wider, flatter river valley about 22 kilometers from Tarija. The storage tank is approximately 1 kilometer upstream of town to provide adequate pressure (about four meters head) and the intake is an additional 0.6 kilometers upstream to be able to enter the top of the tank. The system has forty-five connections serving three hundred persons at a total cost to CARE of $b247,099 (US$12,000) with a community contribution of $b3,100 . The initial cost of the pumped system is actually cheaper than the gravity system. However, the gravity system will eventually serve more persons so the cost per person over the life of the system (considering maintenance and operation of the pump) will be about the same for both systems.

The deep well systems are the most expensive and require the highest level of technology. The well drilling rig purchased for CORDECH last year cost approximately US$140,000 in 1978. Deep well systems are more economical for larger populations since the cost of the well itself is a constant. Storage tanks for the gravity systems are massive masonry tanks which require no reinforcing and which can be built by semi-skilled local workmen. However, the elevated tanks for the well systems are of reinforced concrete and require skilled construction workers to bend and tie reinforcing steel and to build the necessary form work.

NAME: INGAVI Well Casing and Hand Pump

LOCATION: INGAVI Rural Development Project area, northern La Paz

DESCRIPTION: The project INGAVI casing and hand pump are good examples of innovative appropriate technology. The system has great potential for being applied anywhere in the country where the water table is close enough to the surface (10-12 meters).

The wells are hand dug by the owner during the dry season when the water table is lowest. A cistern is formed in the bottom of the hole by lining the walls with stone to just above the water line. A lid is formed with precast concrete beams which are cast in metal forms so they have smooth sides and fit together snugly making a good seal. In the middle of the center beam is a hole to take a 2" PVC pipe with a tight fit. The pipe has a belled end enlarged to take a 2½" PVC pipe which extends upwards to the surface. The 2" pipe extends down below the beam about a meter into the water. The 2½" PVC pipe forms the cylinder of the pump and is the conduit for the water to the surface. The belled end of the 2" pipe forms the seat for the foot valve. Both the foot valve and the piston (which are identical) are made by sandwiching a plastic disc perforated with 3/4" dia. holes, a leather packing with matching perforations, a second perforated disc, and a flat rubber flapper (the valve) made from tire inner tube. A specially cast aluminum eye bolt thru the center holds the pieces together. The pump rod (½" dia. steel) attaches to the eye bolt to actuate the piston from the surface. The eye bolt of the foot valve allows it to be hooked and drawn to the surface for servicing after the piston has been removed.

Soil is back filled in around the pipe to the surface, sealing the well. It is generally mounded up higher than the surrounding soil to allow positive drainage of spilled water. Another concrete beam goes over the pipe and is set firmly into the earth. It is cast with lugs to hold down the pump body. The pump body is made from 3" dia. steel pipe. It has a 1½" dia. discharge spigot and welded steel supports for the pump handle. A special fitting on the end of the pump rod attaches to the pump handle. A steel cap fits over the top and is slotted to pass the pump rod. A flexible rubber cover made from tire tube keeps dirt out. The pump has been under development for two years. The weak link seems to be the leather packing of the piston. The soft leather wears out after a year or so. They haven't found any material that lasts very long. Apparently this is also a problem with commercial pumps. They just require yearly maintenance.

The project has a small shop and yard in Viacha where they cast the concrete beams for the wells. They have a small gasoline engine powered concrete mixer and equipment for cutting and tying the reinforcing rod. The forms they use are metal and they cast the beams on smooth swept hard packed soil. There is good quality control. They also cast the slabs for the latrines. These are cast in two parts with a tapered lid for the drop hole

that fits snugly and makes a good seal. The castings were smooth surfaced making them easy to clean, an important feature for latrines.

It was not clear where the pumps were actually fabricated. They may have hired out the work to local metal shops either in Viacha or La Paz. They had a die for injection molding the piston discs of plastic. Production had not yet been really organized. They were unable to make enough pumps to meet the demand.

The pump could easily be fabricated in several different departments where there was adequate demand. Santa Cruz would be a good location for a small factory. Larger scale production is the next logical step to make the pump widely available.

The present cost of the pump is approximately $b1,850. The two most costly items are the steel pump body at $b850 and the plastic pipe at about $b800. Large quantity purchases of the steel pipe and plastic tube could bring the cost down. Rock bottom cost would probably be $1,500. (until inflation raised the steel and plastic prices).

SUGGESTED AT IN WATER AND SANITATION FOR TRANSFER TO BOLIVIA

Max L. Kroschel makes the following suggestions for useful, appropriate technologies to transfer to Bolivia:

NAME: Well Driving Points

LOCATION: Well point and driving cap usually obtainable from United States mail order houses for about US$10/each. Some examples are illustrated in Figure 9

Figure V-9
Well Driving Points

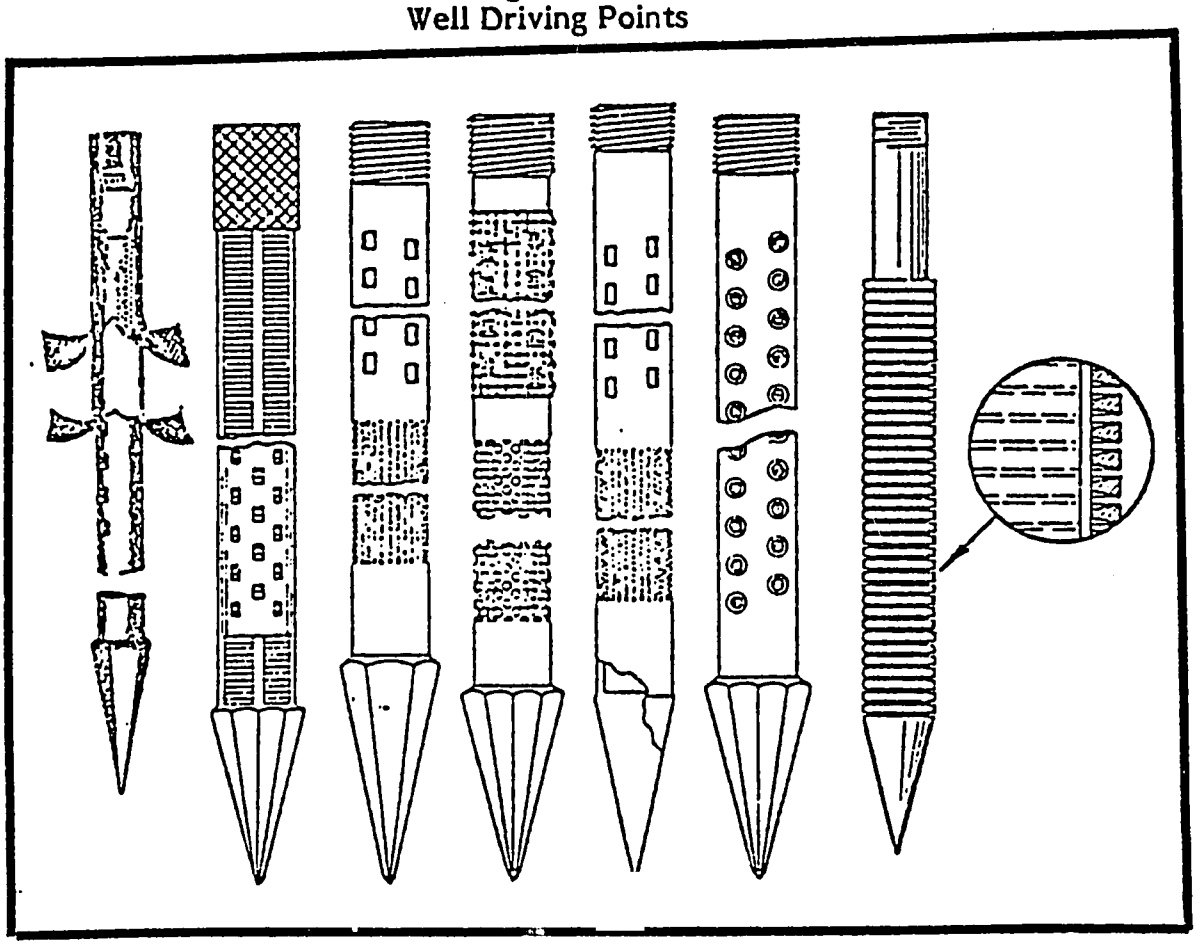

DESCRIPTION: A possibility for wells in the Santa Cruz area where the first water table is too brackish to be potable is driven well points. A well point is a forged or cast steel pipe section about one meter long with a hard pointed end. The sides of the pipe have slots or holes and it is wrapped in fine wire screen (usually brass) that is firmly attached by soldering or brazing. The well point is usually 1¼" - 1½" or 2" dia. and threaded to couple to galvanized water pipe of the same size. A starter hole is made with an auger as deep as can be managed. This would be down to the first water table in the Santa Cruz area. The well point is connected to lengths of galvanized pipe and lowered down the dug hole. A driving cap is threaded on the exposed end of the pipe to take the impact.

The simplest driving method is to strike the driving cup with a large sledge or maul. It is a very slow method, requires substantial scaffolding to stand on at various heights and since the force is not symmetrical there is a chance of buckling the pipe. A sliding weight is preferred.

There are two types. A pipe large enough to fit over the well pipe has a 20 or 30 lb. piece of rolled steel shaft welded into its end. It is dropped down over the pipe and the successive impacts drive the point down. The second type has a wide driving head with a smaller pipe threaded into its center as a guide rod. A large 40 or 50 lb. weight has a center shaft the size of the guide pipe. The weight falls guided by the center pipe. It can be raised by a rope and pulley on a tripod above the well pipe.

Figure V-10
Well Drilling Methods

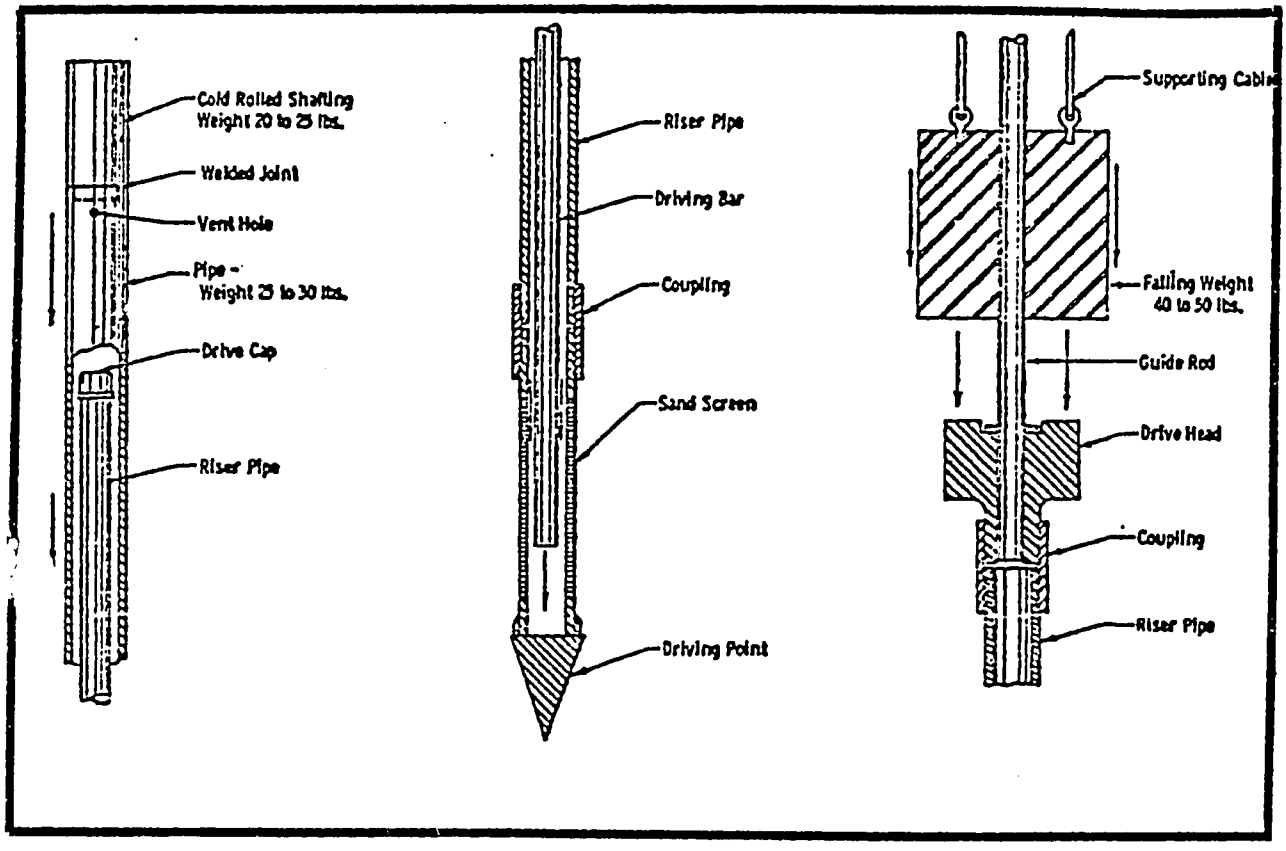

A driven well point would be much more economical than the deep wells drilled using the water pump method. Well points are available in La Paz for 1½" dia. pipe for approximately $b1,000 (US$50). The smaller pipe size is about one third the cost of 3" dia. pipe (approximately $b600 for a 6 m. section). Since the second water table is under pressure the static water level raises to within 2 or 3 meters of the surface allowing the use of a Japanese pitcher pump which costs approximately $b2,000 (US$100). Assuming a drilling labor charge of $b100 per meter,

a complete 30 meter well with pump could be installed for $b9,000 (US$450), or about half the cost of the water pump drilling method. The initial capital investment would be much less also if the well points could be bought in bulk along with the corresponding water pipe; the price per well could probably be lowered another 5 or 10%.

The hand auger technique could be used to reach the first water table and then the well point driven down to the next level from the surface. It might be possible to fabricate the well points locally and this should also be investigated. The driving mechanism is not that much more complicated or expensive than the auger drill. The optimum system would have to be developed by testing several prototypes.

NAME: Malawi Type Pump and Well

LOCATION: Southeast Asia

DESCRIPTION: One problem associated with the conventional handpump used by Henry and Prada and with the Ingavi pump is the inability of the end users to repair or supply spare parts to maintain these models. During the VITA panel discussion of the draft Water and Sanitation report, Tim Journey suggested the adaption of the Malawi Type Pump and Well to Bolivian conditions as the solution to these problems.

This pump consists of a ND 1½" PCV pip top grouted in concrete, which will serve both as a rising main and cylinder. The piston and check valve assembly will be interchangeable and use simple leather, plastic or rubber valves. The pump rod will be ½" ND PCV pipe of neutral boyancy surmounted by a simple T-bar pump head. In this manner the vulnerable pump head pivot and rod connectors -- weak points of a conventional pump -- are eliminated. The absence of rod connections further simplifies the job of changing valves, a task which, given the relatively low projected workload of the pumps (one pump for two households) will be necessary on the average only once a year. (Description adapted from Journey, Roach and Skillicorn, July 1979, with the permission of Tim Journey).

Figure V-11
Malawi Type Pump and Well

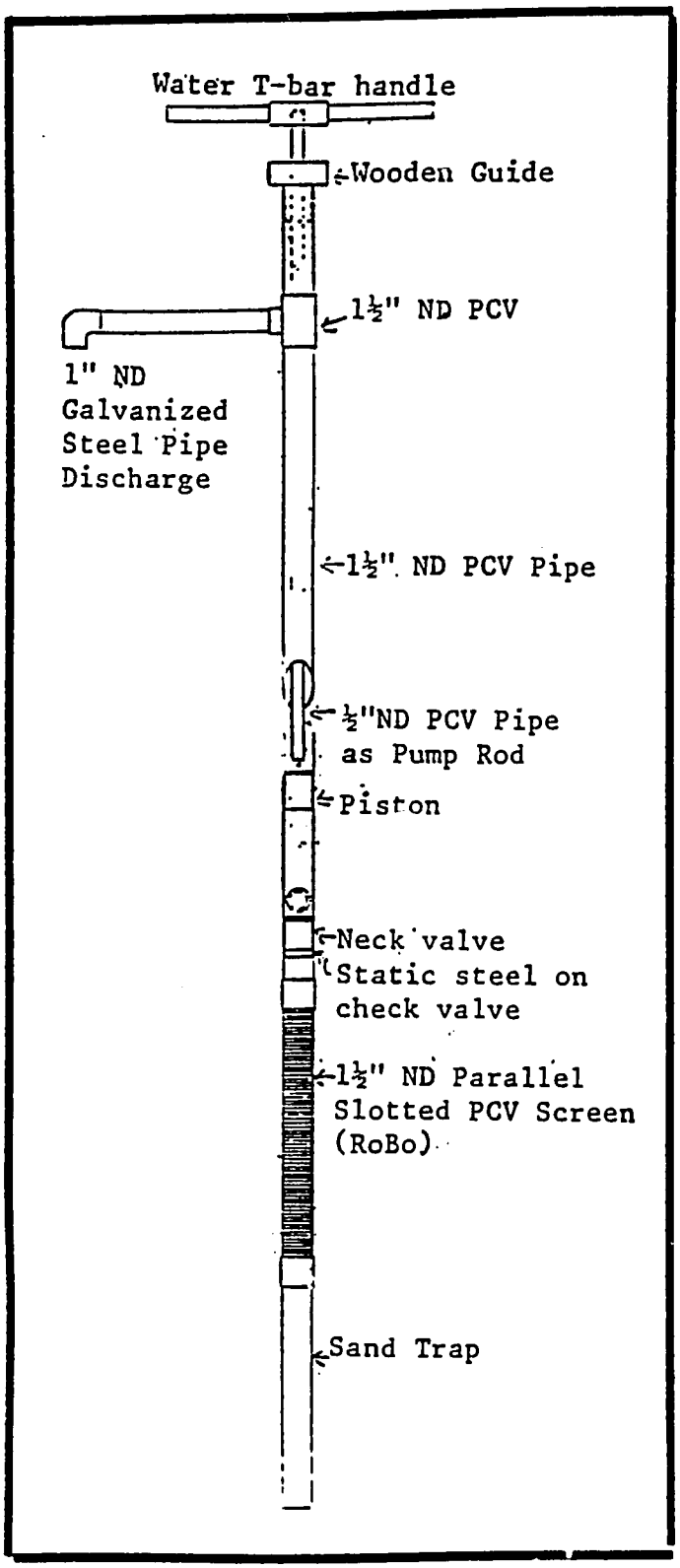

Figure V-12
Detail of Piston and Check Valve
Malawi Type Pump

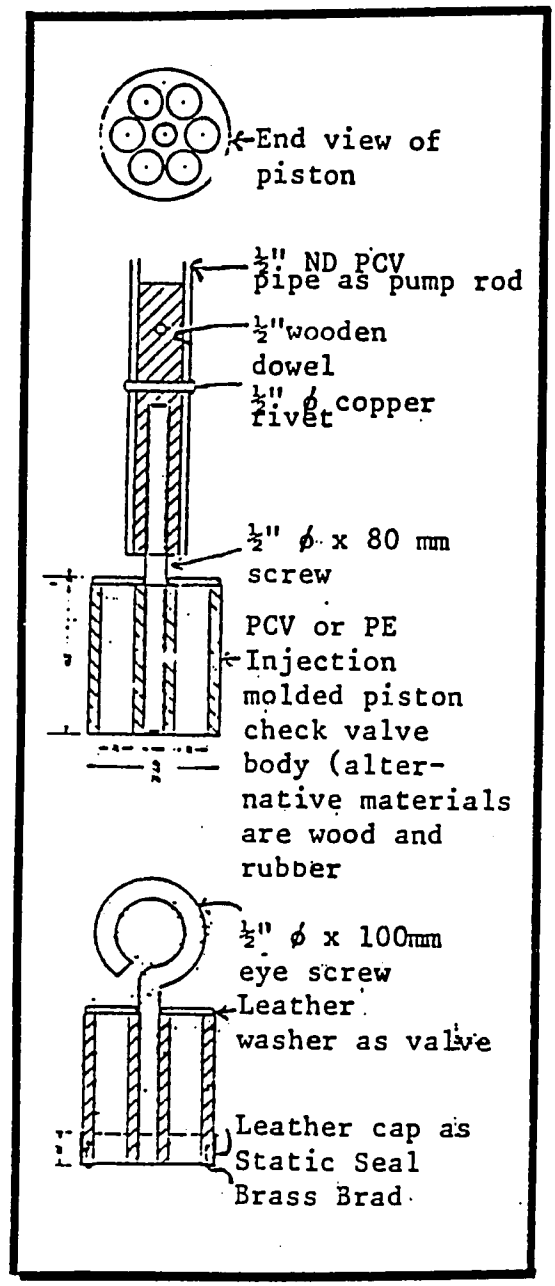

NAME: Wind Mill Pumps

DESCRIPTION: The potential of small community systems for 5-15 clustered houses should be explored using a wind mill pump (see Energy Sector on Mennonite Colony produced wind mills), an elevated ferrocement tank of several thousand gallon capacity and a small distribution system of 3/4" and ½" PVC pipe.

The cost of jetted wells using an irrigation pump as developed by Walt Henrey is just too high to have much application for individual wells. If an intermediate scale motorized drilling table could be developed it would probably be cheaper to operate than the lower tech expandable pump method, but still too expensive for individual wells. However it could drill community use wells much more inexpensively than the private drilling companies with their larger rigs' deeper capacity.

NAME: Ferrocement Water Storage Tanks

LOCATION: Intermediate Technology Development Group, United Kingdom

DESCRIPTION: One source of potable water that has been largely overlooked is rain water that runs off the roof. Most areas of Bolivia have too little rainfall and too long a dry season for there to be adequate potential. However, in high rainfall areas like the Chapare, the Oriente, Beni or Pando, it is a water source worth investigating.

A simple method of forming ferrocement tanks was developed by Simon Watt of the Intermediate Technology Development Group for use in Africa. Unreinforced tanks can be made up to 100 gal. size (approximately 400 liters) and reinforced tanks can be made up to several thousand gallon capacity. Needed storage capacity would depend on the length of the dry season and the family water consumption rate but would probably be more affected by what the family could afford.

The tanks are made with reusable form work of galvanized corrugated roofing that has formed one roller into a curved arch the radius of the tank. The form work is made in form quarters each made up of two or three pieces of roofing depending on the height of the tank (roofing is usually two feet wide so three pieces make a form for a six foot high tank).

Each section is made up by riveting or tank welding an angle iron bracket to each end of the roofing pieces. The sections are assembled by bolting the angle iron flanges together with a two inch thick (5 cm.) piece of wood between all four joints. A three inch slab is cast the size of the tank with a minimum of reinforcement (six inch square welded mesh or one quarter inch bars at twelve inch spacing). The ends of the rebars are

allowed to stick up all around the periphery of the slab about six to eight inches. The form work should sit on the slab just inside the bent up bars. The form work is wrapped with one layer of three quarter inch chicken wire. Soft iron wire (bailing wire) is wrapped around the form holding on the chickenwire.

The number of wraps of wire depend on the size and height of the tank. Less wire is used towards the top. A mix of one part cement to two and one half or three parts sand is made into a damp mixture (not wet) and plastered over the wire. The plaster coating should be kept damp by draping burlap sacks over the walls and keeping them constantly wet. After 24 hours the forms are removed very carefully from the inside by removing the bolts and the two inch square spacers. The form sections are pulled inward one at a time and removed. They are oiled before plastering and should separate easily from the inside surface. The cement should be brushed with a stiff brush to roughen the surface and remove any oil film and then given a coat of mortar to fill in the corrugations. This gives a uniform wall thickness of less than an inch.

The ferrocement must be kept moist for about two weeks, when it can be filled slowly with water for final curing. A thousand gallon tank takes about six sacks of cement, twelve meters of chickenwire (one meter wide), 200 m. of bailing wire, 12 meters of ¼" rebar, and a ½ m^3 of sand. Materials cost in Santa Cruz would be about $b2,500 (US$125).

An organization like CIFEMA could be contracted by OCT to build several test models to determine cost and ease of construction, durability, and water tightness. The same construction technique might also prove useful for grain storage silos.

The idea should be tested and developed before being recommended by OCT. If the tests were successful, a booklet could be produced with adequate illustrations and construction instructions.

NAME: Drinking Water Container/Condenser

DESCRIPTION: If a simple container could be devised which has a clear plastic top with a drain, the container could be placed in the sun in the morning. Then the water would condense on the clear plastic top, be caught in a drain and led off into another clean container. This would leave most pollutants behind.

Reportedly many campesinos draw drinking water in the morning and have it standing near the house all day long in an open unprotected container. The minimum protection such water should have is a simple cover on the container.

Water in many areas is polluted in many ways. Pollution by heavy metals from the mining areas can be just as damaging to human health as bacterial or parasitic pollution.

Clear plastic has been used in Africa to distill-precipitate water from apparently dry soil. If it works there, it should work on a water container.

NAME: Low Water Pour Flush Toilets

DESCRIPTION: Pour flush (PF) toilets are a low cost option whenever individual water supply is available and a water seal toilet is desired by the user. It is much more economical than a conventional cistern flush toilet and septic system. The squat is toilet made locally at minimal cost.

Less water is consumed which puts less demand on the water supply system. A smaller septic tank is needed because of the lower volume of water. Also a smaller drain field is necessary. Where ground water or high rain is not a problem and soil permeability is adequate, the septic tank is built as a soak away with no bottom and unmortared side walls of loose brick allowing the liquid to soak directly into the surrounding soil, thus eliminating the expense of a drain field altogether.

There are several molds available to cast the squat toilet. It can be made integrally with the lid of the septic tank using concrete and some light steel reinforcing. It can also be cast as a small unreinforced unit that is then set level into a concrete or tile floor and connected to the separate septic tank with a 10 cm. dia. concrete tub.

Small ceramic pedestal toilets are being manufactured in Cali, Colombia at a cost of about US$5 each. A small local industry could be established to manufacture the porcelain pedestal if there were adequate demand generated by a large scale program. Simple glazed squat plates could be made up in small quantities by native potters using traditional methods and materials. Matching floor tiles could be made up along with them for sale as a set.

There is some recycle potential with low water systems. The sludge can be pumped out of the septic tank on a yearly basis and composted with adequate dry material such as a corn cob, corn husks, waste paper, etc. The rock drain field can be arranged to irrigate and fertilize a backyard orchard or a fence line wind break of eucalyptus trees.

The same septic tank and drain field can be used to dispose of sullage or grey water (other house hold waste waters like sink and lavatory wastes). However, the septic system and drainfield

have to be sized according to the additional load and the tank should be built with two compartments. The toilet connects to the first compartment and the sullage goes into the second chamber which leads out to the drain field.

Pour flush toilets are not limited to rural areas. They provide an affordable option to urban and suburban barrios that have a water supply but no sewer service. They can later be connected to a sewer if it is built, but there is no need to delay sanitation service waiting for a sewer that may never be built.

There are two types of pour flush toilets. The first is a simple modification of the pit latrine in which the squatting plate is provided with a simple 25 mm water seal. Approximately 1-2 liters of water (or sullage) are poured in by hand to flush the excreta into the pit. This type of PF toilet is often used with wet pits as the water seal prevent odor development and mosquito breeding. It is especially suitable where water is used for anal cleansing.

The second type of PF toilet, which is widely used in India, southeast Asia and some parts of Latin America, is used in combination with a completely offset pit. The PF bowl is connected to a short length (8 m maximum) of 100 mm diameter pipe which discharges into an adjacent pit. Approximately 1-2 liters of water are required for each flush. The slope of the connecting pipe should be not less than 1 in 40. The pit is designed as described below and provided with a concrete or ferrocement cover slab and wall lining as necessary. This type of PF toilet may be installed inside the house, as it is free from both odors and fly and mosquito nuisance; it therefore obviates the need for a separate external superstructure, and it can thus meet social aspirations for an "inside" toilet at low cost. When the pit is full, it can be emptied or, alternatively a new pit can be dug and the toilet connected to it.

The second type of PF toilet can also be connected to a low-cost sewerage system.

Labor and maintenance requirements are low. Rather more skill, however, is required to make the water seal units, and this would normally be beyond the scope of individual householders on a self-help basis. However, the manufacture of water seal units is, with experience, not a difficult task and one which readily lends itself to local enterprise.

Sullage disposal facilities are required.

Assuming that flushing only takes place when stools are passed and that a maximum of 3 stools are passed per person per day, the maximum water requirement is 6 lcd.

Figure V-13
Indian Pour-Flush Toilet with Completely Displaced Pit

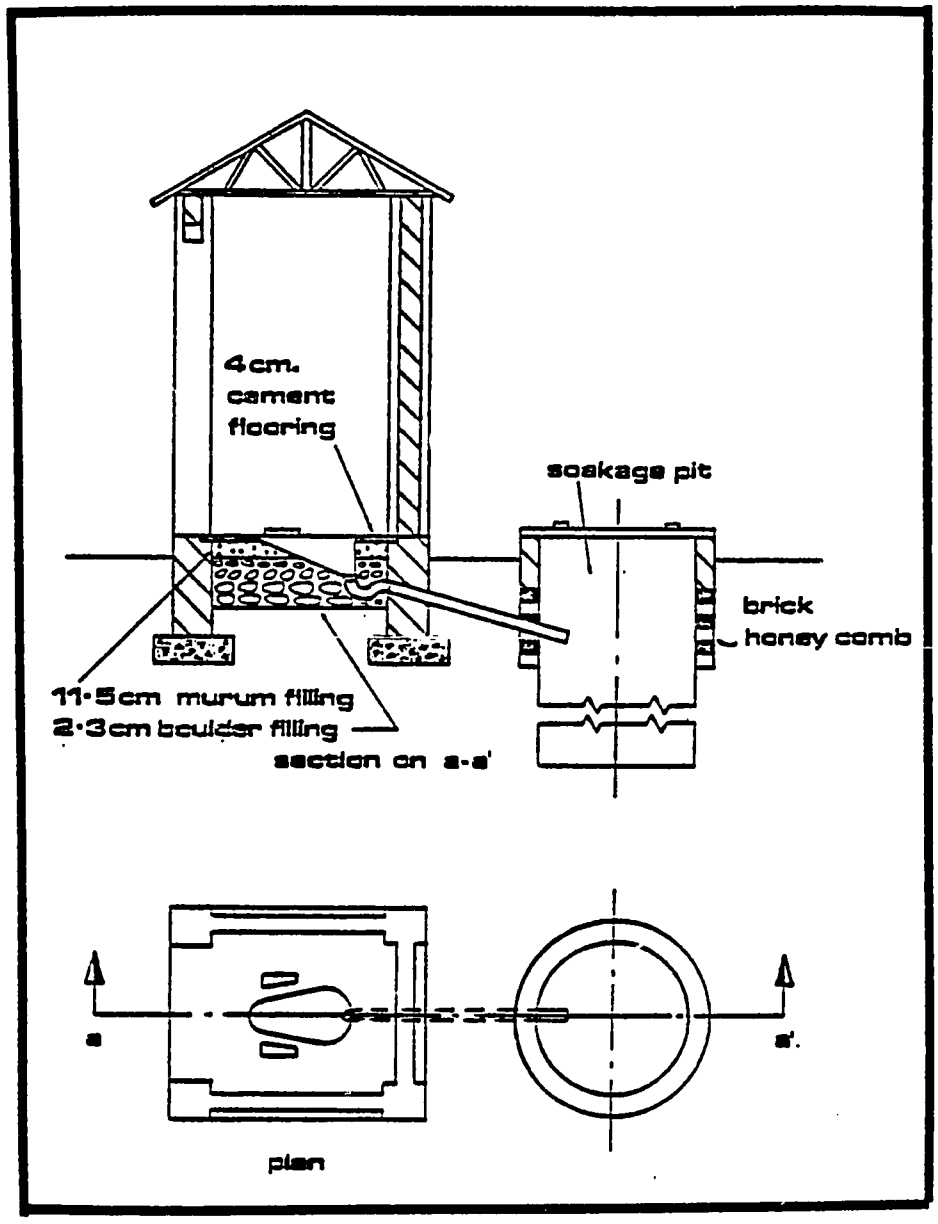

Figure V-14
Schematic Diagram of Sewered Pour-Flush System

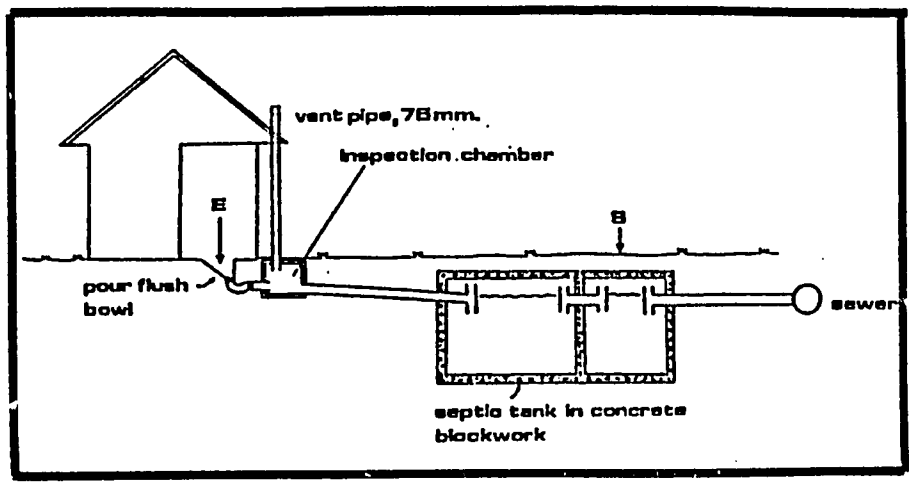

Figure V-15
Galvanized Sheet Metal Water Seal Unit for the
Pour-Flush Toilets Located Immediately Above the Pit

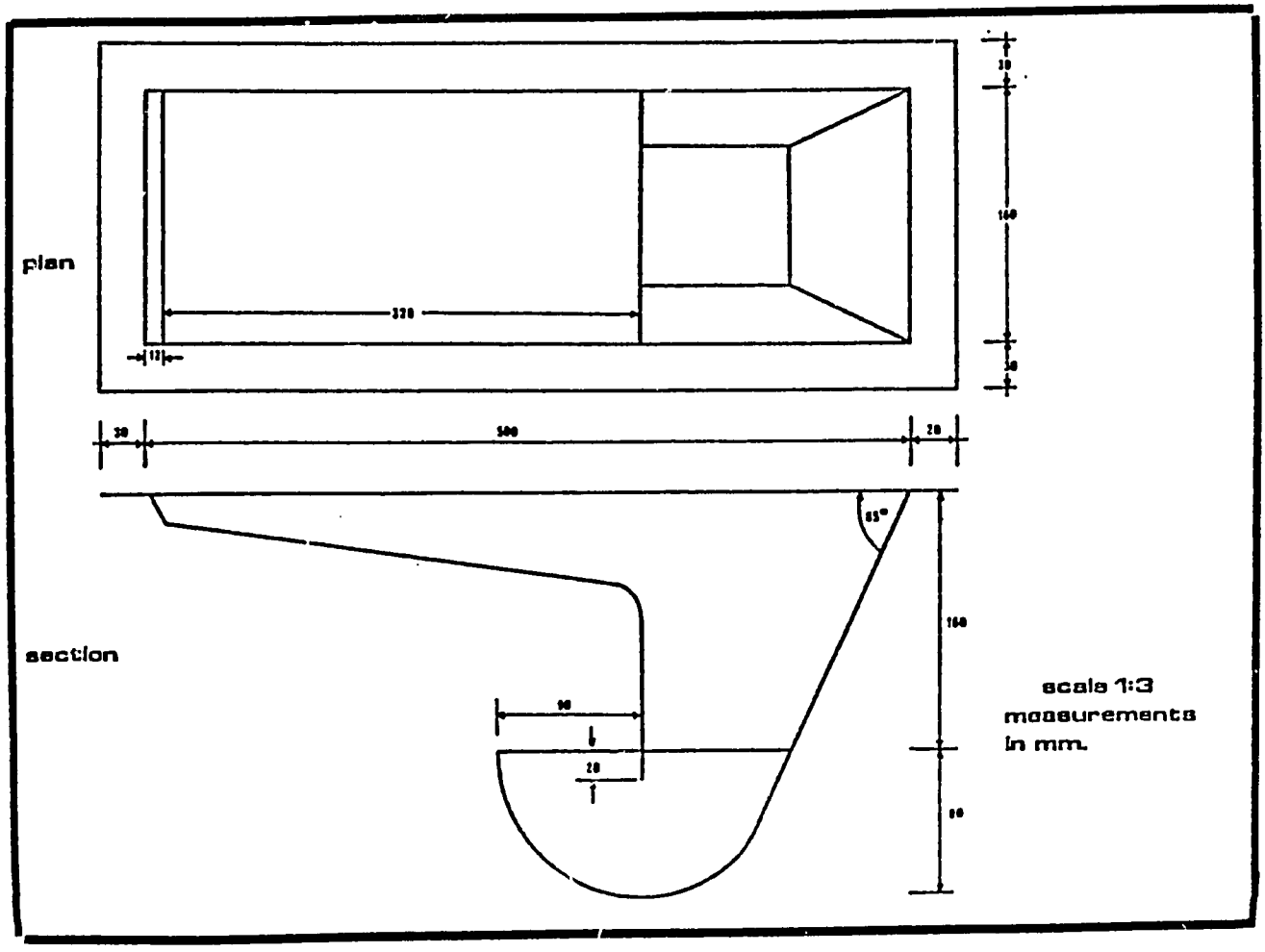

Figure V-16

Water Seal Squatting Plate for Pour-Flush Toilets Located Immediately Above the Pit

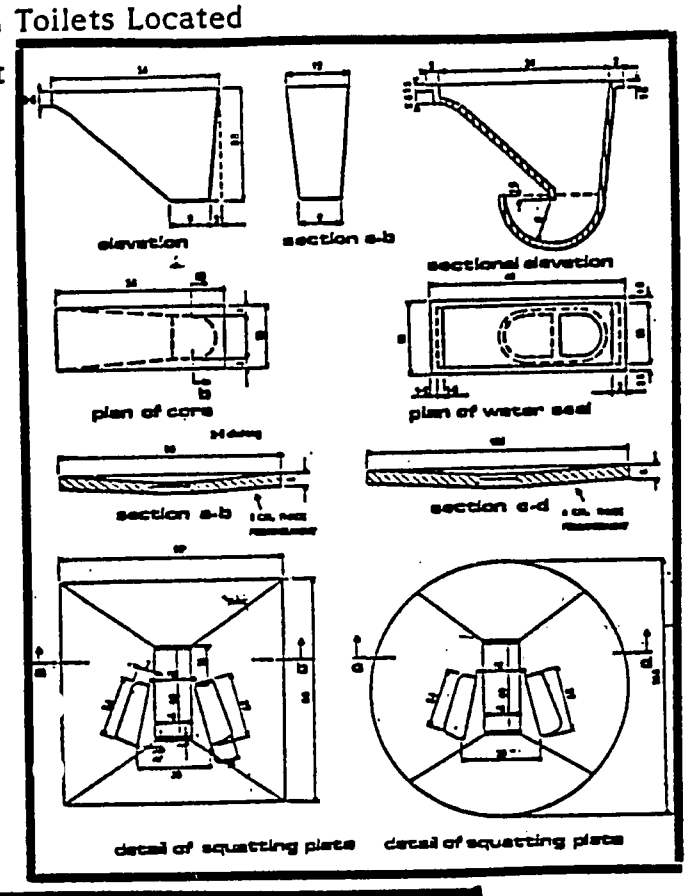

Figure V-17

Squatting Plate and Water Seal Unit Details for Indian Pour-Flush Toilet with Completely Displaced Pit

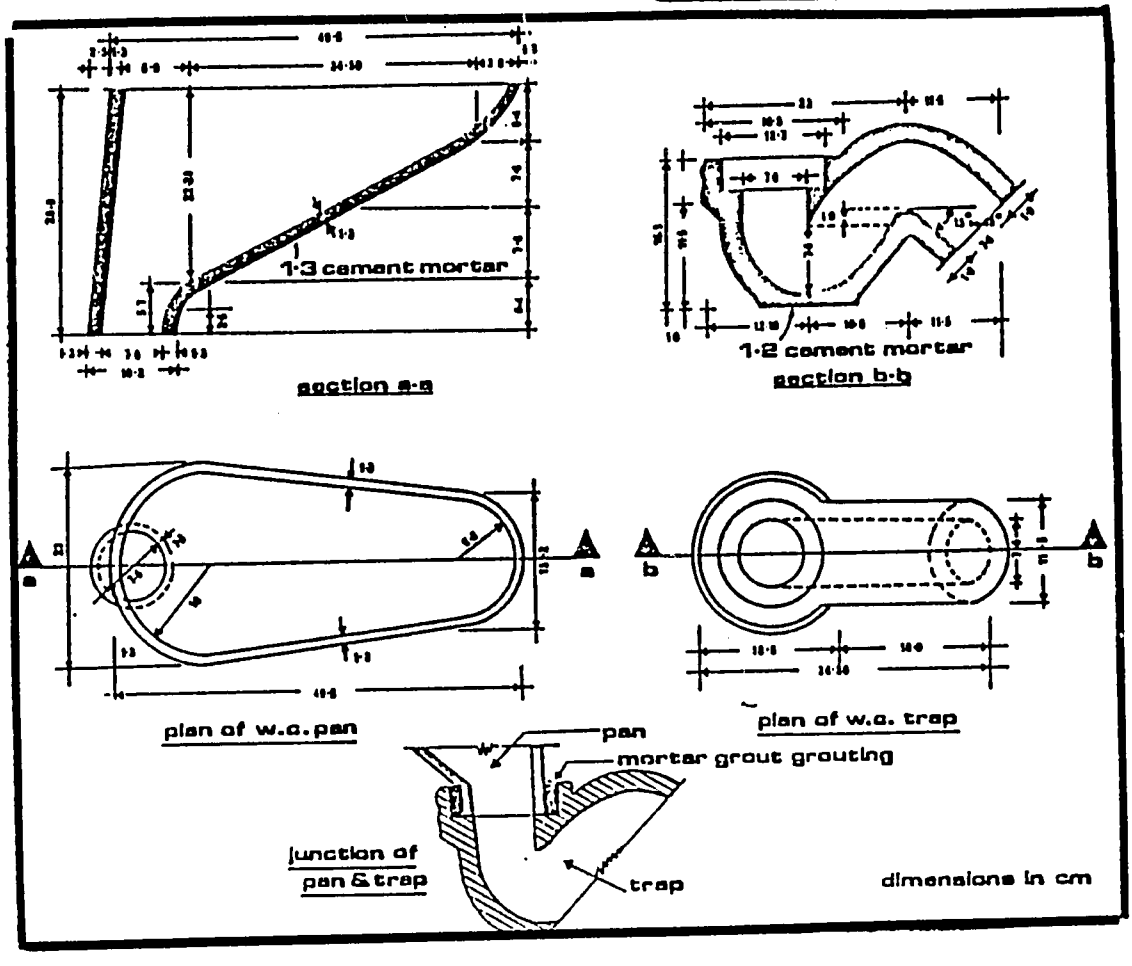

NAME: Compost Privies

DESCRIPTION: A compost privy is a low cost rural sanitation option that provides for collection, storage, and treatment of human and domestic organic wastes for later use as fertilizer. It has several important advantages over a pit latrine: the most important is that the fertilizer end product has a value that can be demonstrated in terms of increased production. Thus the farmer gains tangible benefits from the privy and this generates incentive for its use and maintenance. The compost privy is built above ground so there is no problem of ground water contamination or flooding out during heavy rains. The decomposition process is aerobic so the foul odors generated by the anacrobic decomposition process common to pit latrines are not a problem (although it still has some odor).

Household garbage and waste paper can be disposed of in the privy as well as wood ashes.

However, compost privies require more maintenance and attention. The lid must remain on when not in use to prevent flies from entering and breeding in the compost. Once a privy is infested with flies it is difficult to eliminate them. Quantities of organic matter such as corn cobs, corn husks, rice hulls, dry grass or weeds or any other unused crop residues must be gathered and stock piled for addition to the privy after each use.

The most basic design for a compost toilet is a double vault structure with access doors at the back of each compartment. There is a drop hole with a lid over each chamber. One side is used until full, then sealed up to compost while the other side is in use. The vaults will hold a six month accumulation of wastes. When the second vault is full, the first is cleaned out and the contents, an earth-like humus with no offensive odor, is stored in a covered bin until the next planting season.

The size of the vault limits the size of the compost. The thermopilic heating (to temperatures of 65°F - 70°C) characteristic of large compost piles does not occur. Therefore, treatment is not always complete although the reduction of the number of parasite eggs and pathogenic bacteria is substantial (90-95%). Another six months of aging even further reduces the viable organisms to a negligible level. However, to reduce the chance of disease transmission, privy compost should be used on field crops like grains or quinua or for transplanting trees. It should not be used on root crops like potatoes or garden vegetables particularly those for resale. Privy-compost can be removed from the vault after three or four months and recomposted in a large pile containing other manures and agricultural wastes. The higher temperatures of the larger pile will render it safe for use under any circumstances. However, the extra effort seems hardly worth the amount of material treated (less than 1 m^3) since it can be used for grain crops as is.

In Bolivia, the vaults could be made of adobe blocks wiht a thick coat of mud plaster inside and out to seal them adequately. Two

of the precast concrete slabs used in the pit latrine programs would cover the vaults.

Either a wooden lintel or precast concrete beam would span the openings for the clean out access. The access door could be wood, thin ferrocement slab, or simply adobes stacked up in front of the opening and mudded over to seal out flies and insects. Three sections of the smallest diameter concrete tube (4"Ø) would make an exhaust vent. The super structure of the privy room would also be adobe covered with any available roofing material. Adobe steps up to the vault floor could have mortared stone treads for durability. Total cost would be about $b400-500 pesos for a family of six.

In economic value of the compost produced can be roughly calculated from its nitrogen content. Human waste per person per day averages 15 lb. dry weight of feces at 6% nitrogen and .15 lb. dry weight of urine at 16% nitrogen. The yearly production of a family of six is N = 6 persons x 365 days (.15 lb./per. x .06 + .15 lb./per. x .16) = 73 lb./yr.

This is more nitrogen than 100 lb. unit of Urea fertilizer which has a retail value of approximately $b.6,400. Therefore, a compost privy has the potential to pay for itself in one year. The quantity of nitrogen wasted each year by Bolivia's rural population of 3.5 million is 21,078 tons. A conservative estimate of the retail value of the nitrogen alone discounting the phosphoruss, potassium and trace element content is $ b. 241,140,900.00 (A quintal of fertilizer which retails for 400 pesos contains approximately 70 lbs. of nitrogen. An average person excretes 12.045 lb. of nitrogen per year).

Figure V-18
Vietnam Double Vault Composting Toilet

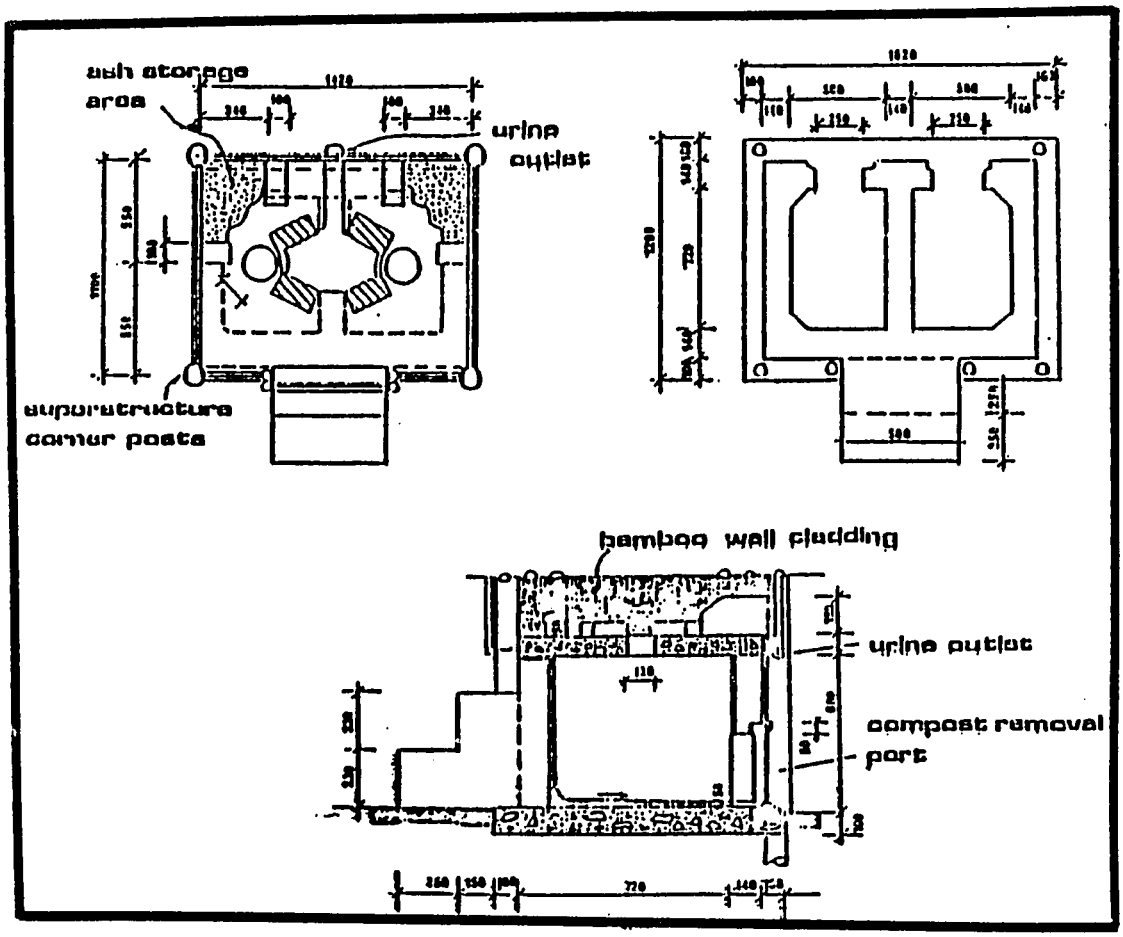

Figure V-19
Botswana Double Vault Composting Toilet with Removable Superstructure

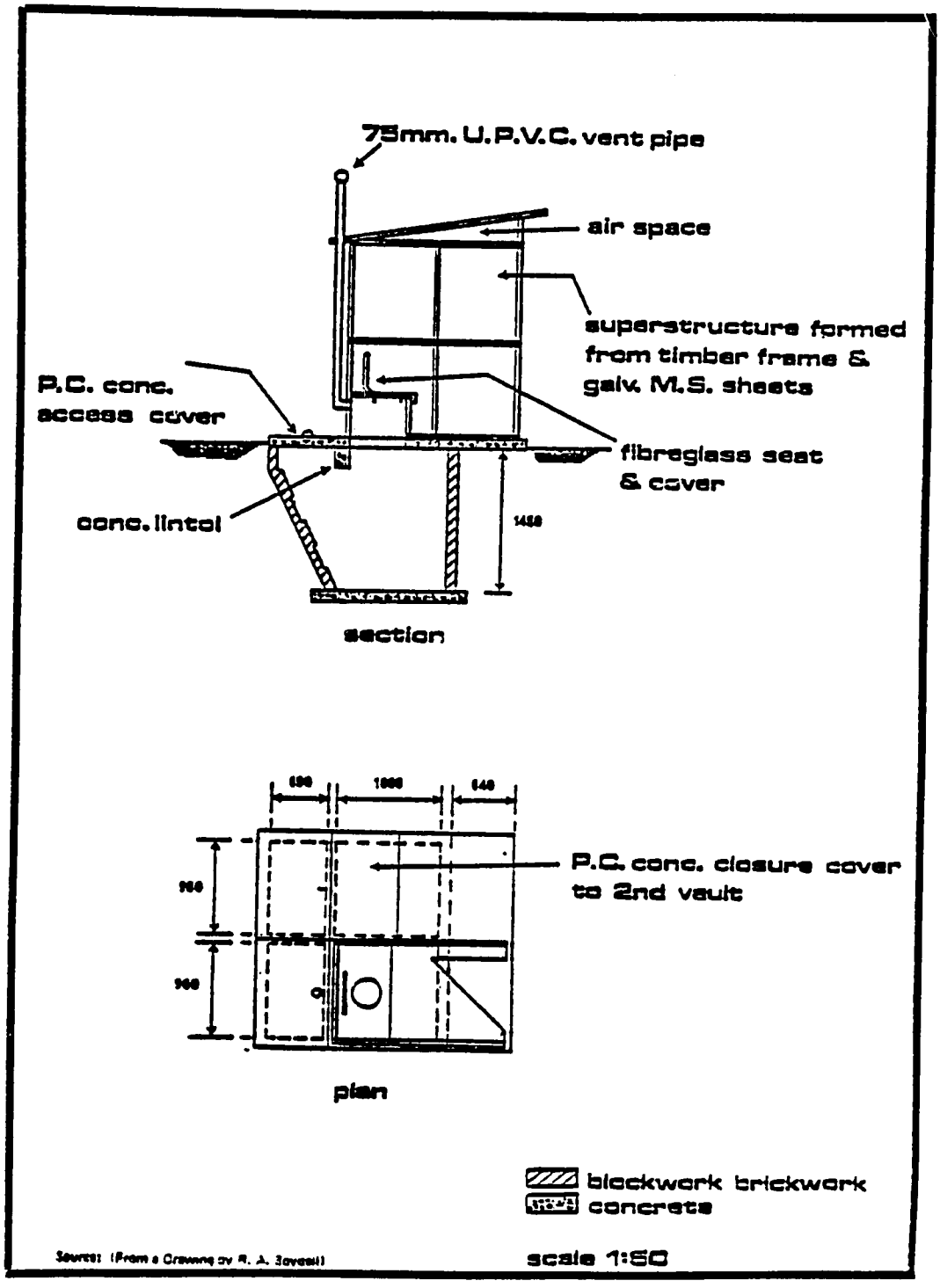

Figure V-20
Tanzania Double Vault Composting Toilet

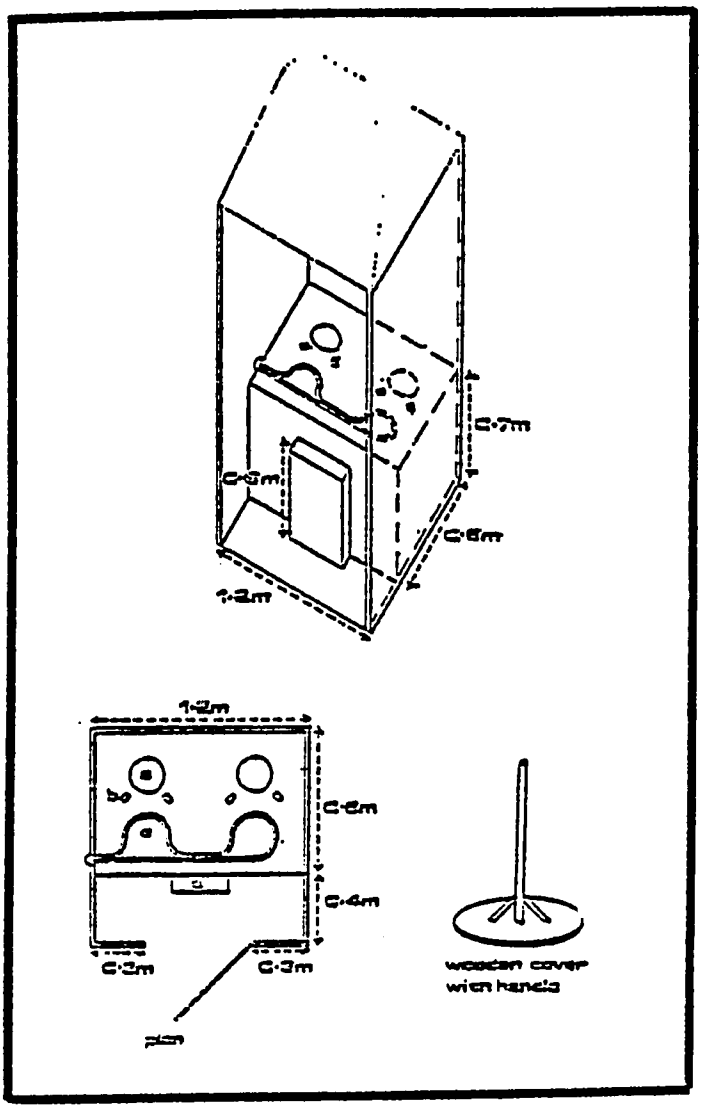

Figure V-21
"Multrum" Continuous Composting Toilet

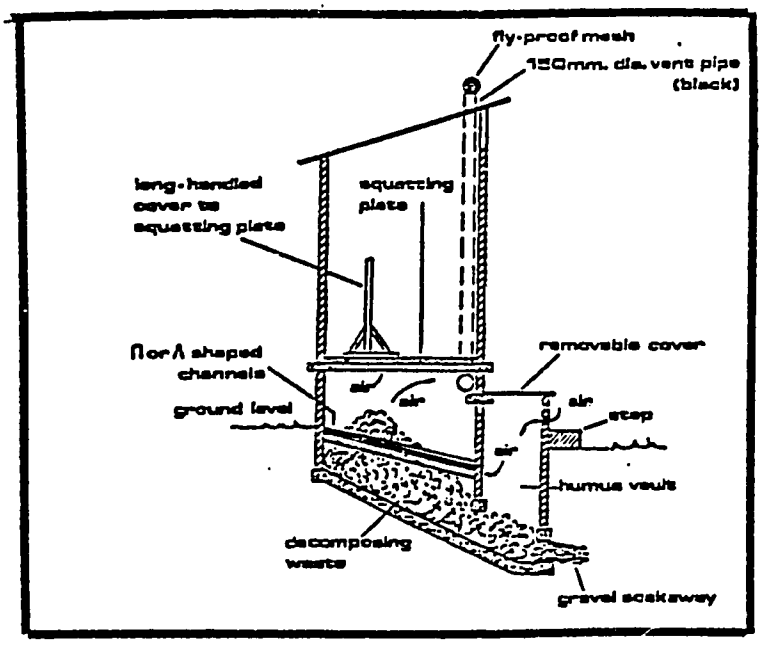

Figure V-22
Details of Tanzania Double Vault Composting Toilet

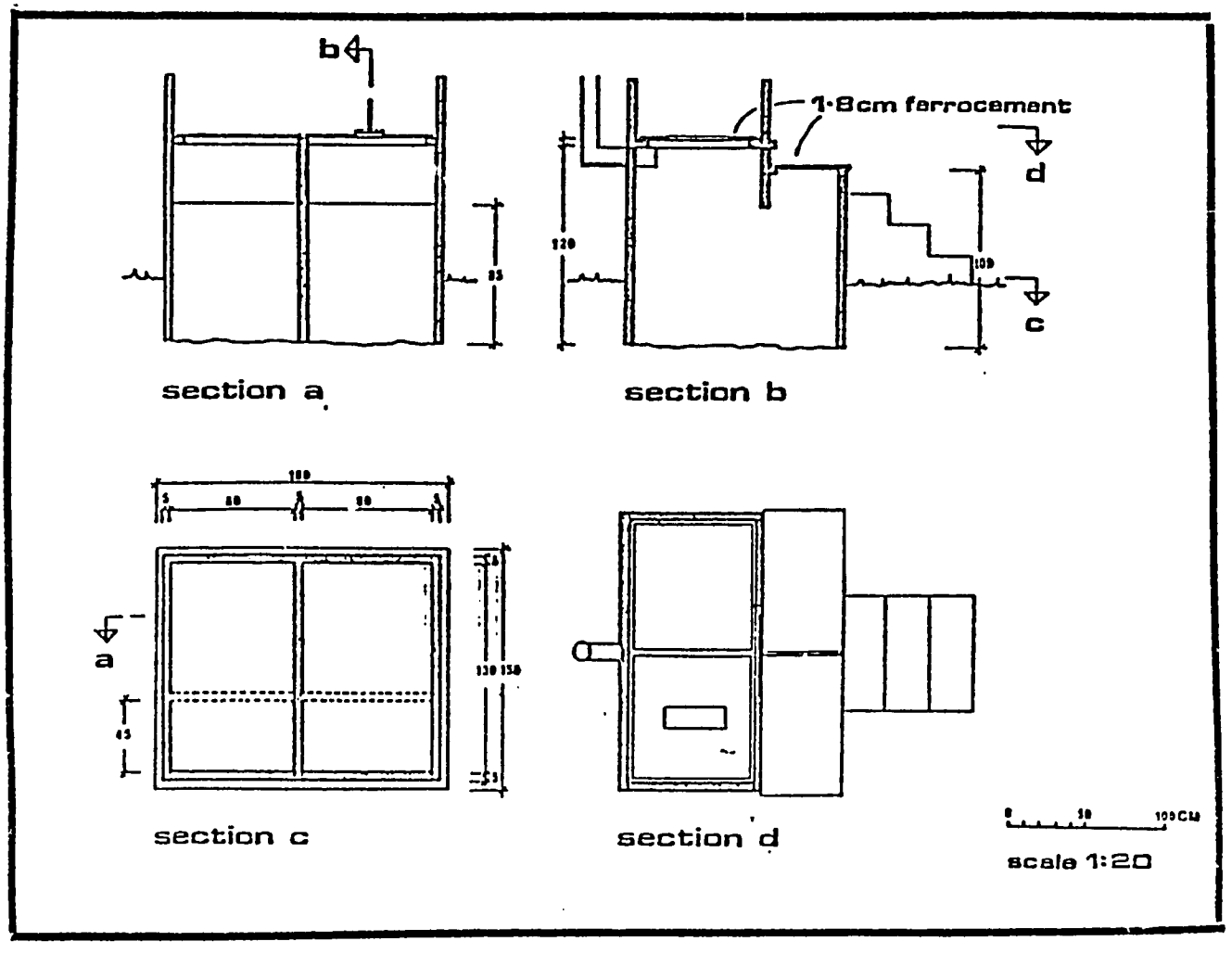

Figure V-23

Farallones Exploded Isometric Compost Privy

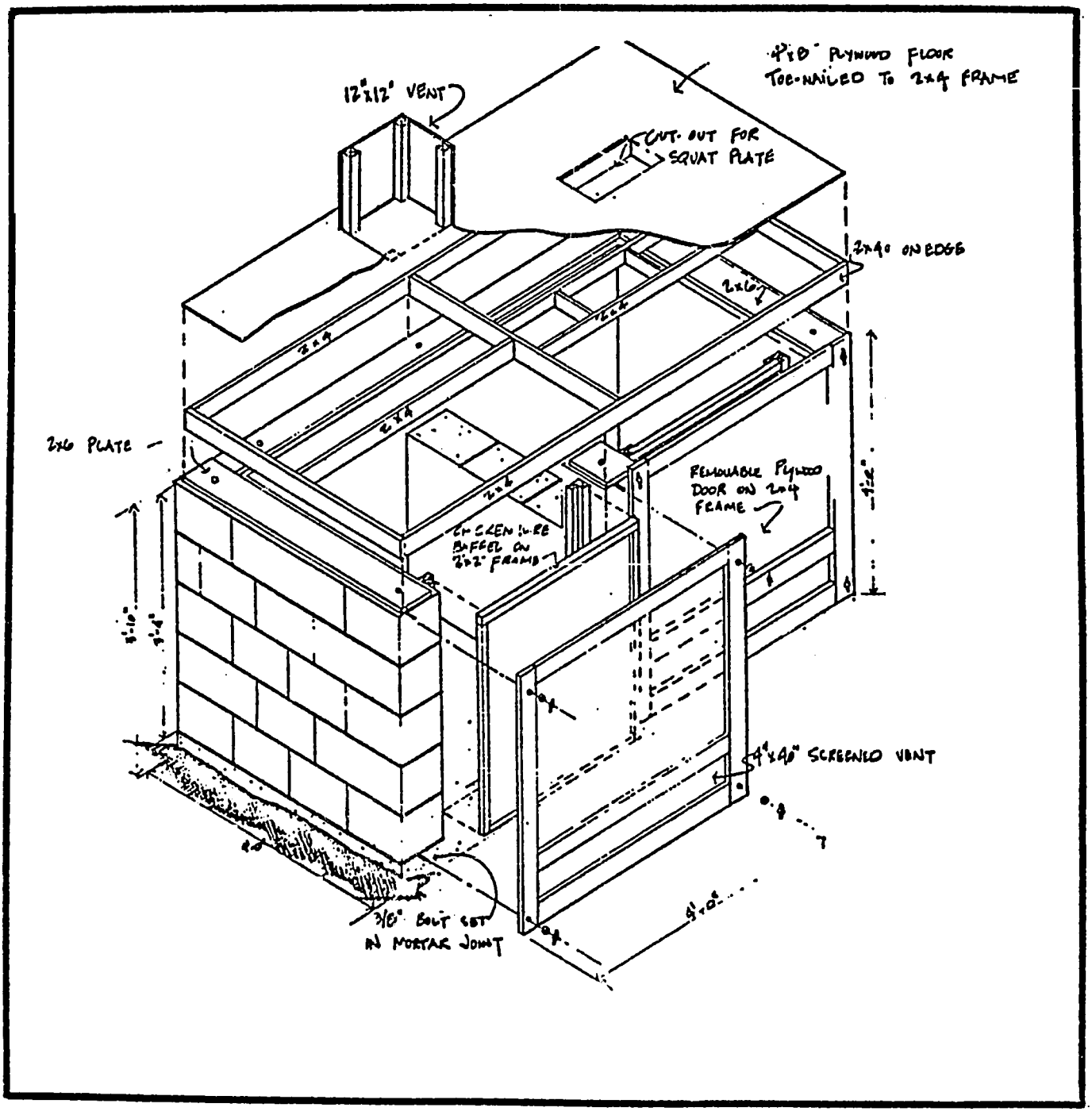

Figure V-24
Compost Privy Layout and Location

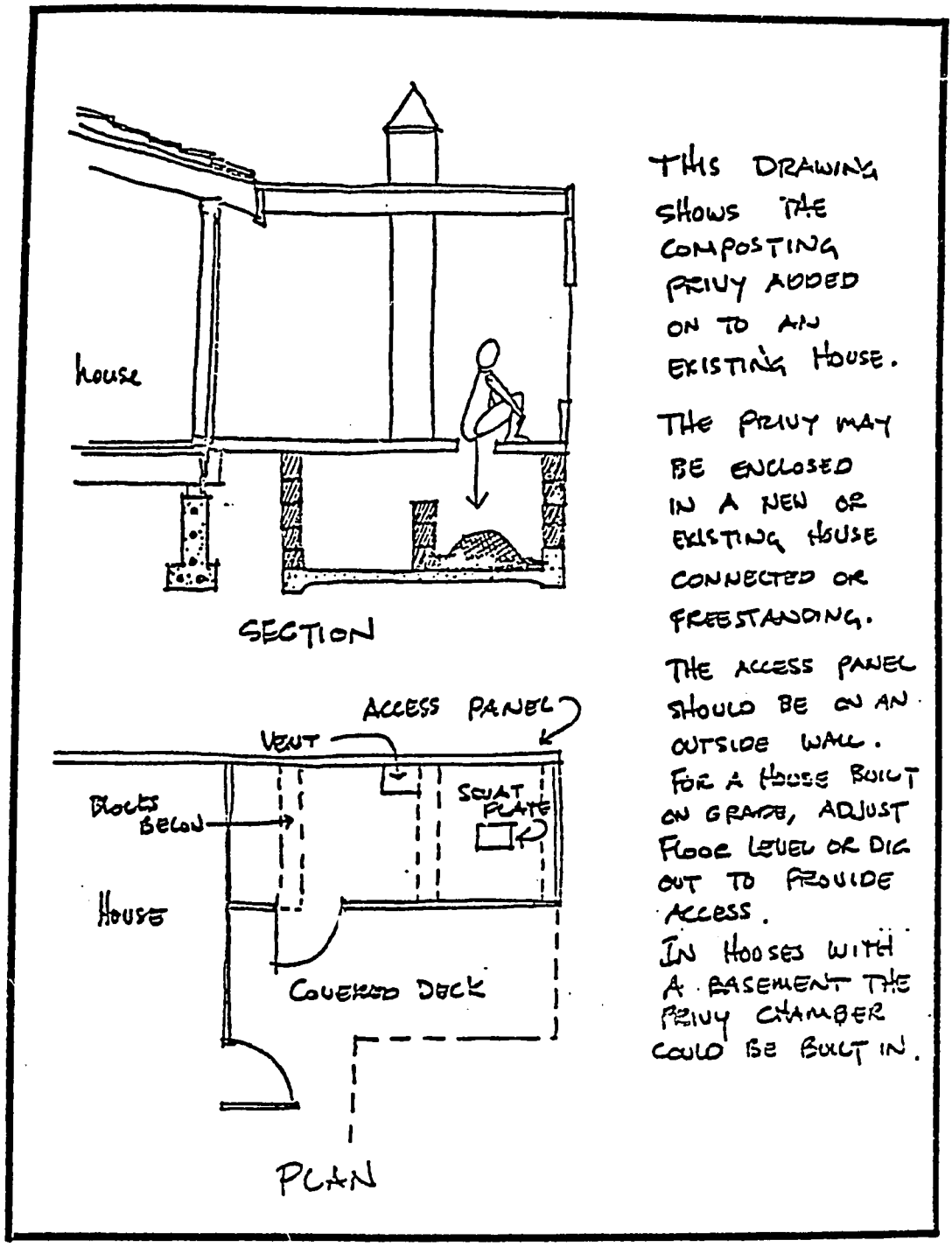

Figure V-25

Composting Privy Materials and Construction Sequence

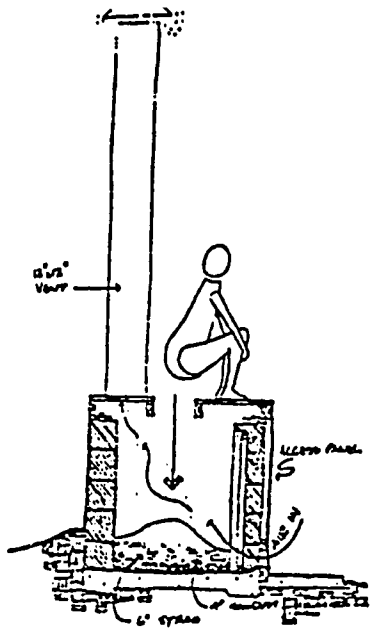

PLAN. SECTION

ROTATION PROCESS

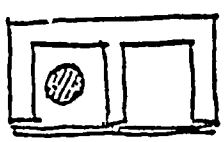

SIX MONTHS OF USE TURNED EVERY OTHER WEEK OR AS NEEDED

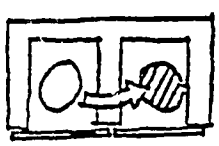

AFTER SIX MONTHS THE PILE IS MOVED TO THE AGING COMPARTMENT.

AFTER ONE YEAR THE FIRST PILE IS READY FOR USE IN THE ORCHARD. REPEAT PROCESS

MATERIALS NEEDED

- 2/3 cu. yard concrete for slab & grout
- one sack mortar
- concrete blocks:
  - 40 8x16 stretchers
  - 20 8x16 corners
  - 10 half blocks
- 2 2'x6'x8' redwood plates
- 2 2'x4'x8' redwood boards
- 14 2'x4'x4' redwood boards
- 2 2'x2'x4' redwood boards
- 40 lin. ft. rebar 3/8" 4' lengths
- 8 7"x3/8" diam. galv. carriage bolts with wingnuts
- 1 sheet 4'x8'x5/8" plywood
- 8 10" foundation bolts, nuts, washers

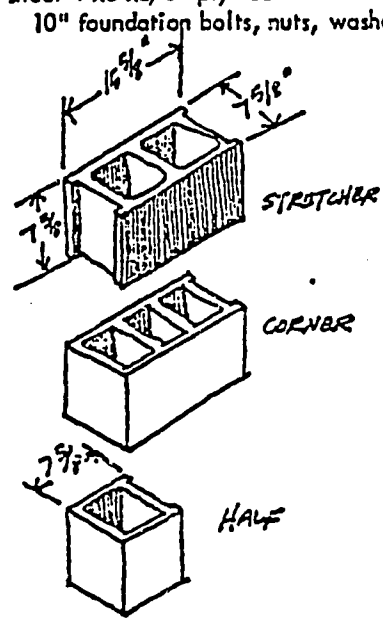

CONSTRUCTION SEQUENCE

1. Level site, layout, place vertical rebar
2. Pour slab
3. Lay blocks, cure 24 hours
4. Fabricate top, access panels
5. Place vent stack
6. Make squat plate
7. Build enclosure

CHAPTER SIX: ENERGY: SECTOR OVERVIEW

BACKGROUND

Energy production in Bolivia for 1977 was 59,867 Tcal. according to DINE, the National Electricity Office, and was derived from the following sources:

- Natural Gas - 62.4% or 37,360 Tcal.
- Oil - 27.4% or 16,396 Tcal.
- Wood, bagazo (sugarcane husks) - 8.6% or 5,134 Tcal.
- Hydro - 1.6% or 976 Tcal.

Final energy consumption for the Bolivian economy in 1977 totaled 16,538 Tcal., distributed by sectors as follows:

- Industrial - 30.4% or 5,031 Tcal.
- Domestic - 30.4% or 5,028 Tcal.
- Transportation - 36.2% or 5,980 Tcal. (all petroleum)
- All electrical - 2.3%
- Other - .7%

In the industrial sector, energy was supplied 44% from petroleum products, 21% from natural gas, 28% from wood and sugar cane husks (bagazo), 5% from electricity, with carbon supplying the remainder. In domestic energy consumption, wood and bagazo provided 63% of the energy source; petroleum products 20%; lp gas 11%, electricity 5%, with the remainder supplied from carbon fuels. The net energy difference in Bolivia was comprised of exports, direct transformation into products and stock reserves.

The large amount of wood and sugarcane husks used in the industrial and the domestic sectors is notable. Notable is the omission in DINE (1978) statistics of food consumption for animal and human energy. Jefferies (1977) estimates per capita energy consumption in Bolivia at 2,840 kw-hrs for 1978 with a 5.4% growth rate, and estimates rural consumption at 1/10 of this or 284 kw-hrs.

People, oxen, horses and donkeys perform most of the work in the traditional rural sector. Jefferies further estimates the energy production of oxen at 200 kw-hrs/year, of donkeys at 115 kw-hrs/year and of an adult person at 20 kw-hrs/year. Most thermal energy for cooking and heating is derived from wood, animal dung, bagazo (sugar cane husks) and various grasses. It is estimated that a family of six consumes about 4-8 kg. of wood per day.

At the outset, it must be remembered that most rural families live in very isolated areas with virtually no interaction with the modern sector or market economies. Rural energy related activities are best characterized by their adaptiveness to local circumstances. After centuries of trial and error, energy patterns have evolved into a very workable, self-contained systems. The following activities characterize the rural situation:

- The clearing of land in the highlands is done primarily by manually removing rocks, and often rock fences are built;

- Land preparation in the lowlands is 'slash and burn', and the sole farm tools are most often a machete and a hoe;

- Throughout Bolivia water is moved manually and supplies are most often polluted;
- The bicycle is very evident in rural areas and most markets have spare parts;
- Many water powered mills for grinding grain can be observed in Oruro, Cochabamba, Potosí and other higher altitude areas;
- Washing is often done wherever water supplies permit;
- Harvesting is typically done manually or with the assistance of animals; and,
- Wooden plows drawn by oxen are typically used in the highlands.

In the modern sector, Bolivia is heavily dependent upon fossil fuels. It is estimated that known fossil fuel reserves will last ten years and that while Bolivia is now a net exporter of fossil fuels, this situation will reverse itself in the near future.

Bolivian government policy sets uniform, countrywide fossil fuel retail energy prices which are well below world market prices. For example, kerosene - $b.30/litre; diesel fuel - $bl.30/litre; lowest grade gasoline - $bl.50/litre; 10 kg. bottle of liquified petroleum gas - $b50.Bolivia has current long-term contracts to provide natural gas to Argentina and Brazil. Questions have been raised as to whether Bolivia's natural gas reserves are sufficient to fulfill these contracts. There are reports that loan terms currently being negotiated between Bolivia and the International Monetary Fund will require raising the domestic prices for petroleum products.

The diesel fuel situation is especially noteworthy. Bolivia produces no heavy crude oil from which diesel fuel is derived. Consequently, heavy crude is imported at world market prices (minimum US$23/barrel) and sold with subsidies,thus representing a gross outflow in foreign exchange. Mario Ramirez of ENDE, the National Electric Company, estimates the true cost of a litre of diesel at b$6 in La Paz which is then sold for b$1.30. Diesel fuel is used to power most large trucks and buses, the railroad system, an estimated 20 megawatts of public electrical generation capacity, and countless dispersed diesel-electric generators. The true value of diesel fuel once it has been transported to the interior is reported to be as high as b$10. /litre.

Electricity represents 6% of Bolivia's energy consumption. The Profile of Electrical Generation in Bolivia for 1978 (Table VI-1) gives demand by sectors as supplied by the major Bolivian power companies: CESSA in Sucre, SETAR in Tarija; SEPSA in Potosí; SET in Trinidad; COBEE in La Paz, Oruru and nearby small mines; CRE in Santa Cruz, and ELFEC in Cochabamba.

Table VI-1
Profile of Electrical Generation in Bolivia for 1978

PROFILE OF ELECTRICAL GENERATION, 1978

COMPANY LOCATION	CAPACITY MW	DEMAND, MW-HRS NUMBER OF CUSTOMERS PRICE OF ENERGY, US$/KW-HR					
		TOTAL	DOMESTIC	GENERAL	INDUSTRIAL	MINING	PUBLIC LIGHT
ENDE							
COBEE (La Paz-Oruro)	142 (h)	486,347	157,235 84,612 .023	63,352 13,600 .050	72,361 .030	70,705 .015	8,298
COBEE (All Mining)	21,675 (h) 18,647 (T)	125,515 (h) 27,322 (T) 197,015 (P)					
ELFEO (Oruro)	0 (distri-tors only)	39,445 16,565	17,901 13,467 .020	8,921 2,972 .025	11,112 126 .023		1,611 .037
ELFEC (Cochabamba)	6 (h)	117,068 52,591	34,825 42,731 .044	12,016 7,990 .050	59,545 1,863 .044	3,051 3 .032	5,911 .029
CRE (Santa Cruz)	Diesel rented from ENDE	139,052	49,821 31,107 .050	20,877 5,657 .063	54,578 269 .037		5,863 7 .048
CESSA (Sucre)	2 (h)	29,993	5,471 7,308 .044	3,213 2,343 .055	13,401 19 .042		991 1 .049
SETAR (Tarija)	2.7 (D) .3 (H)	7,773 (D) 2,140 (H)	3,916 4,236 .062	2,037 950 .073	1,566 61 .055		600 .048
SEPSA (Potosí)	.6 (D)	12,558	5,761 7,313 .039	3,760 1,699 .061	2,320 32 .045		717 .035
SET (Trinidad)	1.4 (D)	4,201	1.566 2,022 .143	842 355 .125	461 62 .092		350 .072

(H) - Hydroelectric; (D) - Diesel; (T) - "Thermal"

Source: Industria Eléctrica Información
Ministerio de Energía e Hidrocarburos
La Paz, Bolivia, 1978.

INSTITUTIONS

Energy concerns are the institutional domain of the Ministerio de Energia e Hidrocarburos (Ministry of Energy and Petroleum) and its dependencies. DINE, the National Electricity office; INER, the National Institute of Rural Electrification; and ENDE, the National Electric Company, are described in the Institutions Section. Both INER and ENDE express interest in development of renewable energy resources.

ISSUES

RENEWABLE ENERGY

Given the rapidly increasing costs of fossil fuels on the world market and consequently the increasingly favorable economics of renewable energy sources, Bolivia's wind and solar energy potential as well as biomass, geothermal and water power resources should be considered for development.

SOLAR ENERGY POTENTIAL

The solar energy potential for Bolivia may be characterized as good to excellent. Jefferies notes there are only five other areas in the world with solar radiation levels comparable to the Altiplano, namely the desert areas of Arizona and New Mexico in the United States, and Mexico; the Sahara, Saudi Arabia-Yemen; southern Africa, and central Australia. Data collection in specific areas of Bolivia to provide localized information for the design and application of solar systems are required.

While the existing records of solar energy potential are limited in number and regional scope, they are sufficient to gain a first order understanding of regional patterns in Bolivia.

Charters and Ramirez (1975) assessed monthly direct and diffuse radiation (in mean cal/cm^2/day) as follows:

	J	F	M	A	M	J	J	A	S	O	N	D
Altiplano	725	600	600	600	450	400	450	525	575	600	725	700
Yungas	575	550	550	550	400	400	400	400	500	500	600	600
Llanos	525	500	500	500	350	350	400	400	400	500	550	550

This data is presented graphically in Figure VI-1.

Servicio Nacional de Meteorologia e Hidrologia using Cambell-Stokes Sunshine recorders reports the hours of sunshine per year at Altiplano: 2,360-2,570; Yungas: 1,550; Llanos: 1,840-2,012. Sun hour records of Servicio Nacional are listed in Table V-2 and those stations recording degree of cloud cover are listed in V-3.

Empresa Nacional de Electricidad S.A. (ENDE)of Cochabamba has measured mean annual global radiation (cal/cm^2/day) using Robitz Pyronometers by SIAP of Italy as:

Figure VI-1
Mean Global Radiation in Cal/Cm/Day and Mean Monthly Global Radiation at La Paz

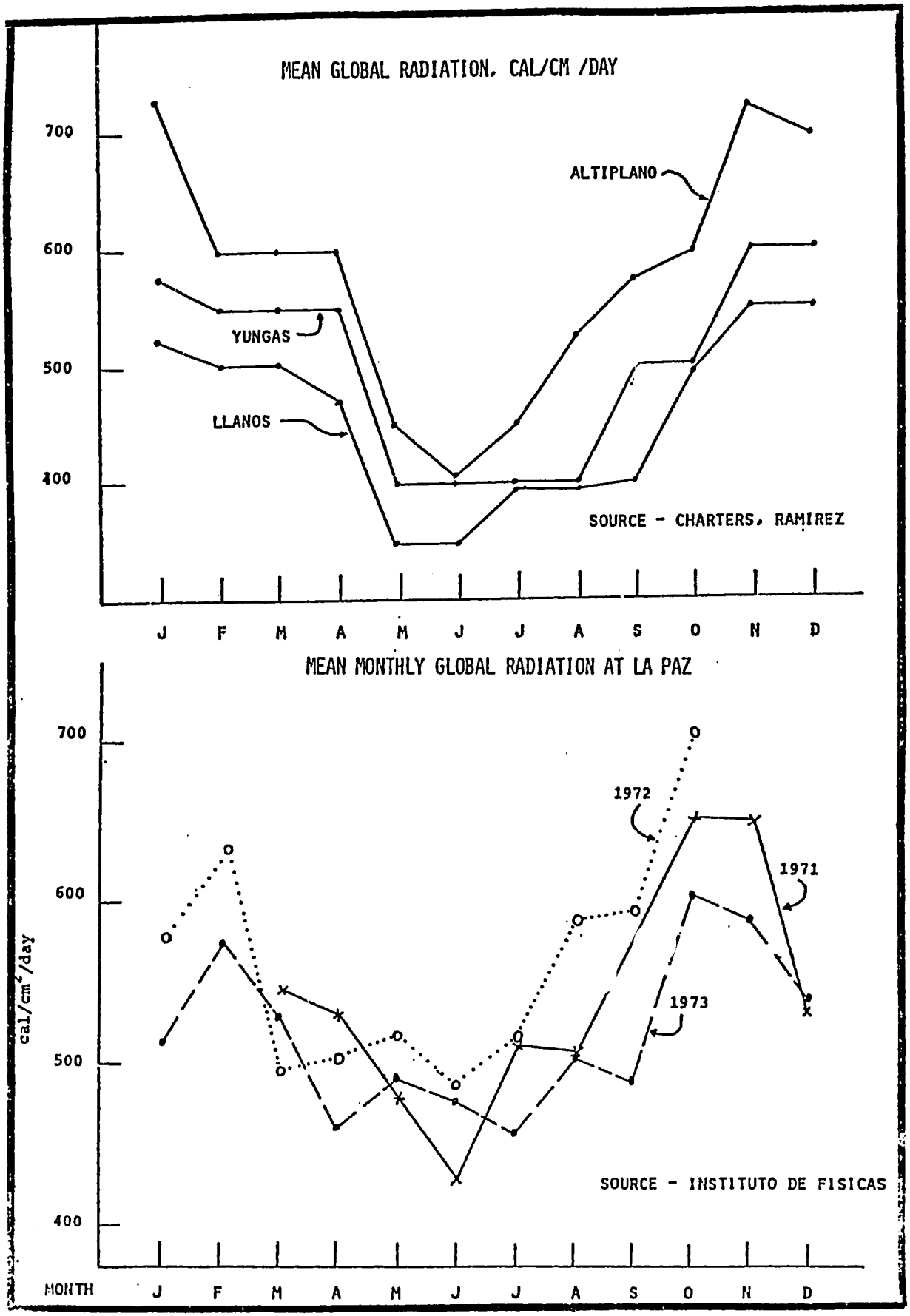

Table VI-2
Hours of Sun per Month in 1974, 1975 and 1976 from Six Locations in Bolivia

Year	J	F	M	A	M	J	J	A	S	O	N	D
El Alto La Paz												
1975	120.2	109.1	183.1	235.4	249.4		304.4	282.1	218.1	237.1	211.0	173.4
1976	100.4	149.4	167.4	240.6	260.2	271.2	294.9	250.7	223.0	318.5	261.2	209.3
Patacamaya												
1974	132.5	135.3	226.1	214.2	295.3	260.3	253.2	204.3	207.5	208.0	228.4	167.2
1975	152.4	120.4	189.4	235.4	233.3	224.4	277.1	268.4	221.0	246.3	177.1	148.0
1976	120.8	182.8	214.3	257.7	268.4	270.8	273.9	238.9	208.8	285.2	238.8	205.8
El Belén												
1974	99.1	140.2	191.8	210.5	313.0	263.0	294.3					195.0
1975	187.0	135.0	230.0	250.0	243.0	170.0	268.0	302.0	255.0	250.0	277.0	116.0
1976	112.0	163.0	207.0	249.0	293.0		286.0	282.0	254.4	317.0	284.0	232.0
Julaca												
1975	155.0	191.9	261.0	288.8	280.2	269.7	302.5	317.8	292.1	310.8	347.2	266.4
1976	211.4	242.6	320.0	311.2	309.1	293.1	301.3	292.5	267.2	353.2	341.5	313.4
Tupiza												
1974		181.2	265.2	211.3	265.6	261.2	278.4	217.5	252.4	298.1	263.0	248.0
1975	173.8	187.8	221.4	234.2	237.3	222.6	273.1	263.0	246.3	264.5	284.5	241.4
Uyuni												
1975	171.8	117.7	236.6	256.6	235.7	218.8	243.2	254.0	292.0	289.8	298.8	241.6
1976	175.2	235.2	285.6	303.2	276.2	248.9	261.4	277.0	274.9	325.8	293.9	286.4

SOURCE: Servicio Nacional de Meteorología e Hidrología
as interpreted by E.F. Jefferies in
Aprovechamiento de la Solar
UN/BOL/71/532/01/01
Fall, 1977

Table VI-3
Bolivian Weather Stations which Recorded Daily Cloud Cover in 1975

Apolo	Desaguadero	Quiroga
Central La Paz	El Belén	Ravelo
El Alto La Paz	Experimental Chinoli	Sacaba
Central Santa Cruz	Estación Experimental San Juan	Sica Sica
Tarija	Entre Ríos	San Julián
Aiquile	Huarina (Cota Cota)	San Benito
Alcoche	Independencia	San Pedro de Buena Vista
Angosto del Bala	Irupana	Sorata
Anzaldo	Irpachico	Sacagua
Arani	Julaca	Tamborada
Asunta	Luribay	Tarabuco
Ayo Ayo	Mairana	Tarata
Bermejo	Mizque	Tiraque "A"
Calacoto	Mojo	Tiahuanakee
Capinota	Monteagudo	Turuchipa
Collana	Morochata	Uyuni
Comanche	Oploca	Viacha
Comarapa	Padcarpa	Vivero Santa Ana de Caranavi
Condoriri	Palca	Sapecho
Copacabana	Patacamaya	Villa Talabera
Chipirini	Pelechuco	Villa Serrano
Chulumani	Pojo	Yotala

SOURCE: Servicio Nacional de Meteorología e Hidrología

Pilaya en Chilcare	Puesto Nova	Misicuni	Central Cochabamba	San Mateo (Ivirizu)	Humapalca	Chayanta
641	579	546	461	308	269	257

ENDE is reported to now be recording data at three additional stations.

Solar radiation (cal/cm^2/day) at Saavedra, Department of Santa Cruz from September, 1975 to August, 1976 is reported by CINCA (CNECA) as:

S	O	N	D	J	F	M	A	M	J	J	A
555	690	595	673	605	598	611	621	421	350	525	533

Instituto Nacional de Electrificación Rural (INER) has published maps of Bolivia's solar radiation which are reproduced in Map VI-I and VI-2.

Hours of sun per month from several locations in Bolivia are displayed in Table VI-2. Bolivian weather stations which recorded daily cloud cover are given in Table VI-3. Both hours of sun and cloud cover enter the calculation of solar potential.

Map VI-1
Mean Radiation in South America for June and December

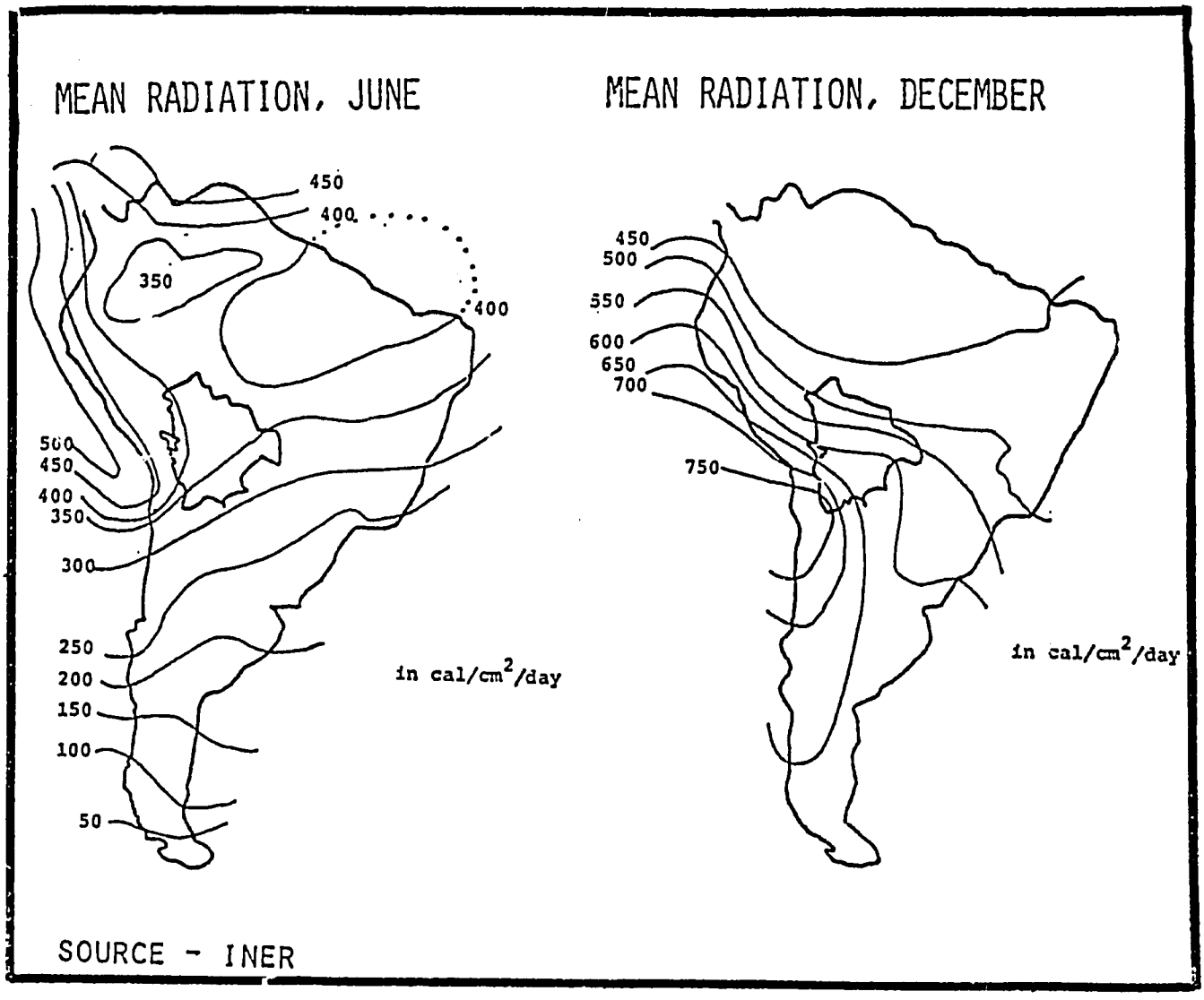

Map VI-2

Mean Solar Radiation in Bolivia for December, March and June

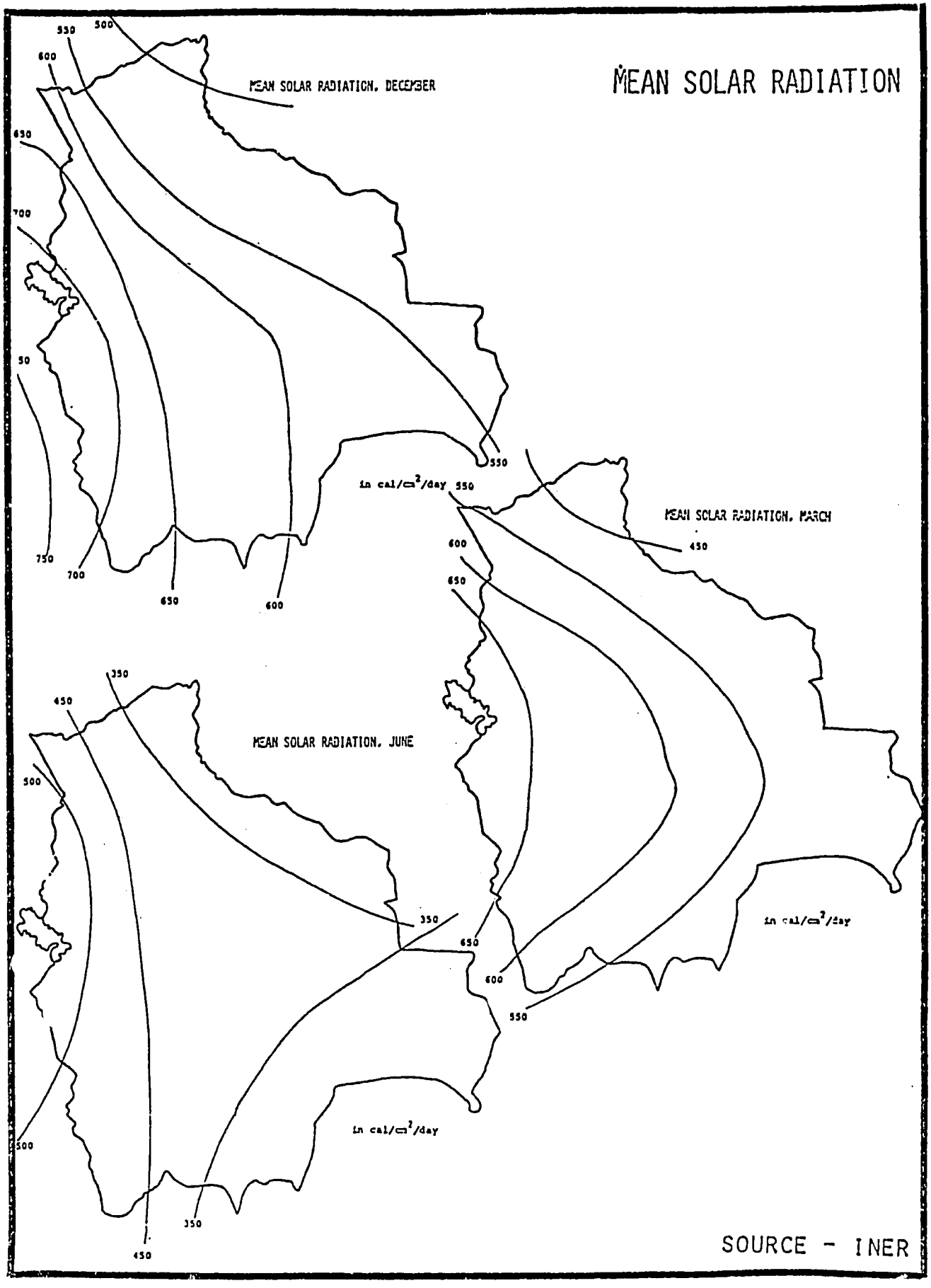

WIND ENERGY POTENTIAL

Much of Bolivia exhibits mediocre to poor wind power potential. However, sufficient potential exists in certain areas to justify further investigations: basic data collection and "wind prospecting" for optimal wind energy sites. A preliminary evaluation indicates the use of wind energy would be economically favorable.

It is possible to derive first order definitions of wind energy potential in Bolivia from the existing records of wind speed data. However, more in-depth assessments cannot be derived from the existing data.

The wind speed records of Bolivia's Servicio Nacional de Meteorologia e Hidrologia and the United States military account for virtually all of Bolivia's available wind speed data.

To facilitate analysis, the available data have been separated into two categories:from selected stations in Table VI-4 and from other stations in Tables VI-5 and 6.

As wind speed recording stations are often located at airports, agricultural stations and other locations which are less than optimum wind energy sites, Selected Stations were chosen on the basis of exhibiting high mean wind speeds for a particular region.

Based on the Selected Stations, isovents of mean annual wind speeds have been mapped in Map VI-3.

The power in the wind varies as a cubic function of its velocity and therefore Map VI-4 of mean wind power potential greatly accentu ates the variation in Map VI-3.

Map VI-4 indicates that the Comarapa (350 w/m^2), Santa Cruz (232 w/m^2), Potosí (205 w/m^2) and Calamarca (154 w/m^2) areas exhibit wind energy potential which would favor the economical utilization of wind energy systems today. Further, the San Javier (97 w/m^2), Mojo (74 w/m^2), Jul aca (77 w/m^2), Huarina (67 w/m^2), Apolo (50 w/m^2), Concepción (49 w/m^2), Irpachico (47 w/m^2) and Magdalena (45 w/m^2) areas all exhibit sufficient wind power potential to justify further measurements to specifically determine areal wind power potential.

It is important to note that all mean wind power figures used in Map VI-4 are based on a frequency distribution of a spectrum of daily mean wind speeds. Each daily mean was assumed to be the mean of twenty-four hours of recordings. However, having visited the recording stations at Oruro and Potosi, and based on the past recording procedures used for the United States military's N-summaries as reported by O'Conner (1979), Steve Blake strongly suspects that daily observations are recorded primarily during daylight, working hours, and therefore nighttime wind speeds (which are typically much lower than daytime velocities) are not reflected in the daily means. Consequently, the wind power potentials indicated in Map VI-3 and 4 could be high.

Further, it should be noted that data for Santa Cruz, Charaña and Calamarca are based on over ten years of data, while the other Selected Stations are based on one year of observations and as such are not statistically "reliable". This again resulted from our inability to obtain further data from Servicio Nacional de Meteorologia e Hidrologia.

In attempting to locate optimum wind power sites in Bolivia, a major factor to be taken into account is the mountainous character of much of the country. While mediocre to poor wind power is generally evident, several of the very good wind power sites appear to be influenced by their mountainous settings.

The high wind power potential at Calamarca, Potosí and Comarapa have quite likely been enhanced by venturi - type funnelling of winds by the surrounding mountains. This was clearly evident in Blake's visit to the Potosí wind recording station at the airport which is located in a significant constriction in the mountains. O'Conner has concluded that Calamarca's high winds result from similar funnelling and speculates that this effect should be most pronounced further south of the present (1977) recording station. Funnelling at Comarapa is assumed from its location in the mountains and the fact that virtually all wind power comes from the northwest.

Consequently, in prospecting for optimum wind sites on the Altiplano and in mountainous areas, the effects of funnelling or exposure to the prevailing winds should be given foremost consideration.

Further, consideration should be given to the many hills and ridges scattered across the Altiplano across which wind potential might be greatly enhanced with respect to the surrounding country. These landforms both serve to access higher winds at greater elevations and, in some cases, to compress and speed-up wind flow across them.

The above considerations also apply to prospecting for sites in the windy llanos of Santa Cruz department as frequent hills and ridges characterize this area. However, it should be assumed that well-exposed sites in this region will exhibit wind power potential of roughly similar magnitudes due to the flat, unobstructed nature of the terrain.

Map VI-5 depicts the percentage of wind power by direction at Selected Stations. It indicates that NW and N are the directions of maximum wind flow across much of Bolivia. This map should be used in making regional assumptions about potential wind flow patterns with regard to preliminary site evaluations. For example, where the regional wind flows are largely from the NW, funnels in NW-SE oriented valleys should be given high priority when installing anemometers for preliminary site evaluations. Further, these regional flow patterns are useful guides for selecting sites on a limited scale. The obstructive effects to wind-flow of trees, hills and buildings may be minimized through locating the wind system such that the obstructions are up-wind in a direction of low wind flow.

Figure VI-2 depicts graphs of wind power potential vs. rainfall by month at several dry locations. This provides a first order indication of the potential for wind energy in irrigation. Note that in Charaña, Irpachico, Julaca, Mojo, Concepción and Comarapa wind power potential increases during dry months, suggesting that wind powered irrigation could be more favorable than mean annual wind speeds indicate. However, at Magdalena, Robore Santa Cruz and Oruro no such conclusion can be drawn.

Table VI-4
Wind Velocity Data From Selected Stations in Bolivia

Station	latitude	longitude	Altitude, m.	length of Record, months	Source	Anemometer Height, m.	Recordings per day	Wind Speed, knots
Apolo	14°43'S	68°29'W	1383	12	B	na	na	7.5
Calamarca	16°54'S	68°10'W	3900	123	C	15	0800 1400 1800	12.9
Charaña	17°35'S	69°26'W	4057	128	C	15	0400 0700 1000 1300 1600	5.9
Comarapa	17°35'S	64°31'W	2500	12	B	na	na	14.3
Concepción	16°15'S	62°03'W	490	12	B	na	na	6.9
Huarina	16°12'S	68°38'W	3825	12	B	na	na	10.3
Irpachico	16°44'S	68°13'W	3880	12	B	na	na	8.6
Julaca	20°57'S	67°32'W	3665	12	B	na	na	5.6
Magdalena	13°21'S	64°08'W	235	12	B	na	na	6.8
Mojo	21°48'S	65°33'W	3460	12	B	na	na	6.7
Robore	18°20'S	59°46'W	300	12	B	na	na	6
San Benito	17°38'S	65°57'W	316	12	B	na	na	5.6
San Javier	16°20'S	62°38'W	710	12	B	na	na	8.7
Santa Ana	13°45'S	65°35'W	220	12	B	na	na	6
Santa Cruz	17°47'S	63°10'W	437	111	A	na	na	9.7
Tarija	21°32'S	64°37'W	1957	12	B	na	na	3.8
Uyuni	20°27'S	66°49'W	3669	12	B	na	na	5.8

A. U.S. Air Force/U.S. Navy N-summaries for Bolivia.

B. Servicio Nacional de Meteorológia e Hidrología.

C. Servicio Nacional de Meteorológia e Hidrología as reported by O'Conner.

Table VI-5
Bolivian Wind Stations and Data (United States Military N-Summaries)

(U.S. MILITARY N-SUMMARIES)

Station	Latitude	Longitude	Altitude (feet)	Length in Months	Anemometer Height	Number of Recordings/ Day	Mean Annual Wind Speed; Knots	% Of Calm	Maximum Wind Knots; Direction
Apolo	14°43'S	68°30'W	4,534	77	N/A	N/A	4.5	22	29 NW
Ascención de Guarayas	15°42'S	63°05'W	810	31	N/A	N/A	5.6	25	35 SE
Camiri	20°06'S	63°33'W	2,999	39	N/A	N/A	3.2	37	29 SE
Charaña	17°36'S	69°28'W	13,317	127	N/A	0400 0700 1000 1300 1600	5.9	39	39 W
Cobija	11°04'S	68°44'W	853	71	N/A	N/A	2.7	31	23 S
Cochabamba	17°23'S	66°10'W	8,432	86	N/A	N/A	3.1	39	39 E
Concepción	16°15'S	62°03'W	1,608	96	N/A	N/A	6.0	14	35 S
Guayaramarin (Puerto Sucre)	10°48'S	65°22'W	558	71	N/A	N/A	2.9	34	23 S
La Paz/El Alto	16°30'S	68°10'W	13,462	200	N/A	0400 0700 1000 1300 1600	5.7	23	50 W
Oruro	17°58'S	67°07'W	12,159	140	N/A	0500 0800 1100 1400 1700	4.0	28	44 NW/E
Puerto Suarez	18°57'S	57°52'W	505	95	N/A	N/A	4.4	15	33 N
Riberalto	11°00'S	66°05'W	564	71	N/A	N/A	2.4	36	19 S
Roboré	18°20'S	59°45'W	984	88	N/A	N/A	5.6	19	35 N
Rurrenabaque	14°28'S	67°35'W	656	42	N/A	N/A	2.3	54	29 SE
San Ignacio de Velasco	16°22'S	60°59'W	1,214	79	N/A	N/A	4.7	23	30 N
San Joaquin	13°04'S	64°48'W	656	77	N/A	N/A	4.2	26	29 S
San José	17°51'S	60°47'W	1,303	96	N/A	N/A	5.4	25	35 S
Sucre	19°03'S	65°16'W	9,351	61	N/A	N/A	5.5	9	21 SW
Tarija	21°32'S	64°47'W	6,250	60	N/A	N/A	5.7	22	25 SE
Trinidad	14°45'S	64°48'W	774	75	N/A	N/A	5.8	11	35 Se
Uyuni	20°35'S	66°49'W	12,041	101	N/A	N/A	5.4	22	37 N
Vallegrande	18°28'S	64°07'W	6,890	77	N/A	N/A	6.7	12	29 N/S
Villazen	N/A	N/A	N/A	39	N/A	N/A	1.7	75	44 N
Yacuiba	22°01'S	63°43'W	1,903	58	N/A	N/A	5.2	26	47 W

Table VI-6
Bolivian Wind Recording Stations and Data in 1975

(Servicio Meteorológico, 1975)

Station	Latitude	Longitude	Altitude	Mean Annual Wind Speed, Knots	Direction of Max.Wind Power Greater	Next	Number of calm Days
Alcoche	15°43'S	67°40'W	560	5.4	N	W	0
Anzaldo	17°50'S	65°55'W	3,000	2.5	N	S	32
Asunta	16°02'S	67°14'W	710	3.1	W	E	32
Ayo Ayo	17°06'S	68°01'W	3,856	6.5	NW	SE	12
Calacoto	17°17'S	68°38'W	3,805	5.7	NW	SW	3
Capinota	17°42'S	66°14'W	2,588	.3	SE	NE/NW	95
Collana	16°51'S	68°18'W	4,000	2.7	N	NW	53
Comarapa	17°35'S	64°31'W	2,500	14.3	NW	SE	7
Condoriri	17°36'S	67°13'W	3,830	2.6	N	NE	1
Copacabana	16°09'S	69°05'W	4,018	1.4	NW	SW	66
Chipiriri	16°51'S	65°30'W	250	.8	N	NE	74
Chulumani	16°22'S	67°30'W	1,811	.6	NW	SW	79
El Belen	16°05'S	68°40'W	3,820	7.1	NW	N	0
Huarina (Cota Cota)	16°12'S	68°38'W	3,825	10.3	NW	SW	0
Independencia	17°06'S	66°51'W	2,788	4.0	SE	NW	.02
Irupana	16°26'S	67°28'W	1,848	.8	SW	NW	74
Irpachico	16°44'S	68°13'W	3,880	8.6	E	NW	0
Julaca	20°57'S	67°32'W	3,665	9.6	NE	NW	6
Luribay	16°55'S	67°56'W	2,480	4.5	NW	SE	1
Mairana	18°06'S	63°57'W	1,350	6.0	NW	N	17
Mizque	17°55'S	65°18'W	2,035	.9	E.	N	85
Monteagudo	19°47'S	63°57'W	1,250	.2	NE	E	91
Morochata	17°18'S	66°30'W	3,094	.1	NE	SE	96
Palca	16°30'S	67°58'W	3,333	4.6	N	S	20
Patacamaya	17°15'S	65°55'W	3,788	5.5	NW	NE	46
Ravelo	18°48'S	65°30'W	3,180	6.0	N	E	5
Sacaba	17°22'S	66°03'W	2,704	.9	N	NE	91
San Benito	17°38'S	65°57'W	2,710	5.6	N	SW	10
San Borja	14°49'S	66°35'W	266	3.9	NW	SE	14
San Pedro de Buena Vista	18°17'S	65°59'W	2,800	2.6	S	N	11
San Ignacio de Moxos	14°53'S	65°36'W	220	4.8	NW	SE	10
Tarabuco	19°10'S	64°51'W	3,284	3.3	SE	NE	34
Tarata	16°36'S	66°02'W	2,414	1.0	N	E	60
Tiraque "A"	17°24'S	64°44'W	3,100	1.8	N	W	63
Tiahuanaku	16°33'S	68°42'W	6,842	4.8	N	NW	27
Turuchipa	19°45'S	64°57'W	1,800	1.8	E	S	0
Viacha	16°39'S	68°18'W	3,865	5.6	N	NW	18
Vivero Santa Ana de Caranavi	15°47'S	67°38'W	780	1.9	N	E	39
Vivero Sapecho	15°30'S	67°25'W	520	2.9	SE	E	6

Map VI-3
Isovents of Mean Annual Wind Velocities in Bolivia

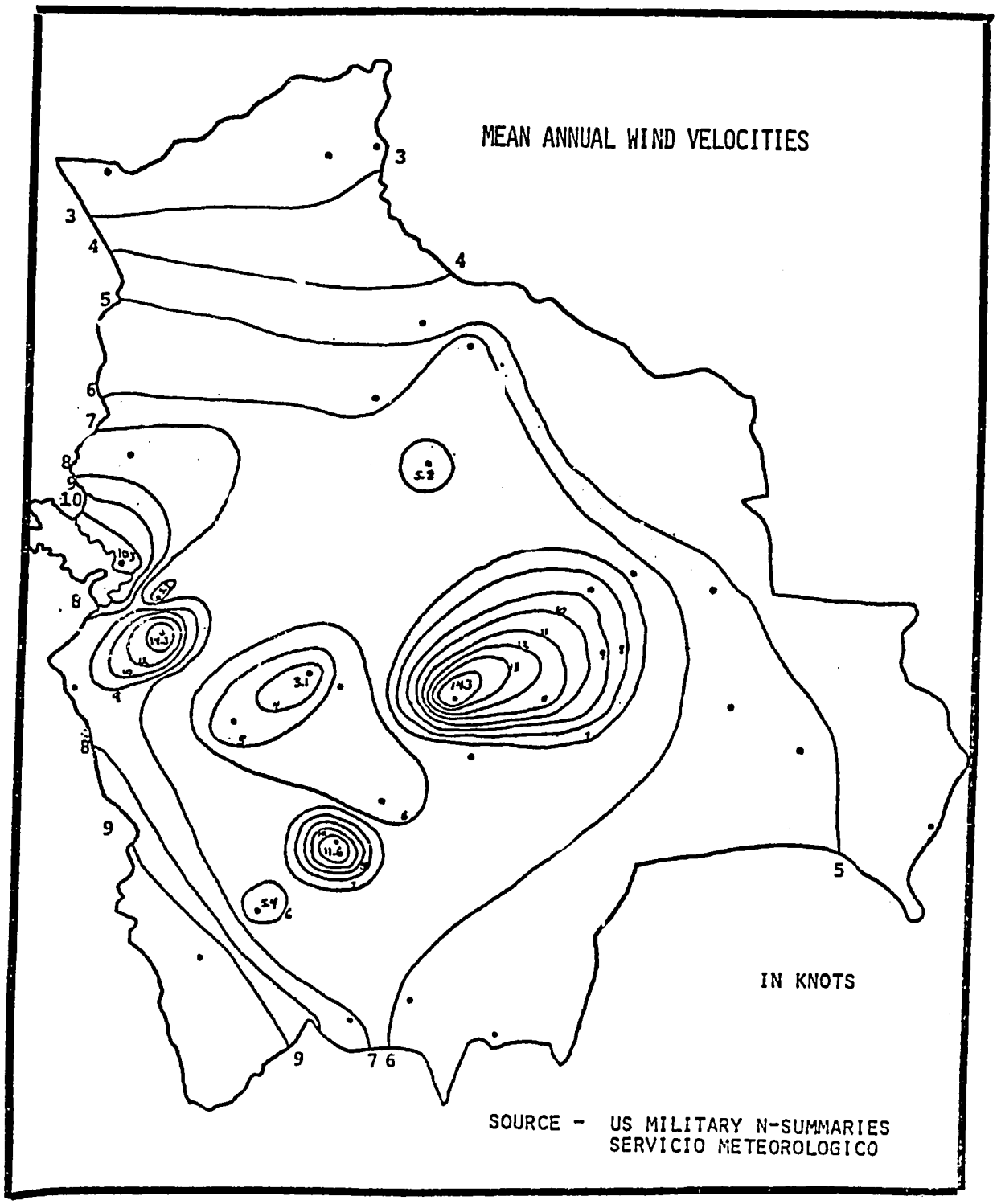

Map VI-4
Mean Wind Power Potential (W/M^2) in Bolivia

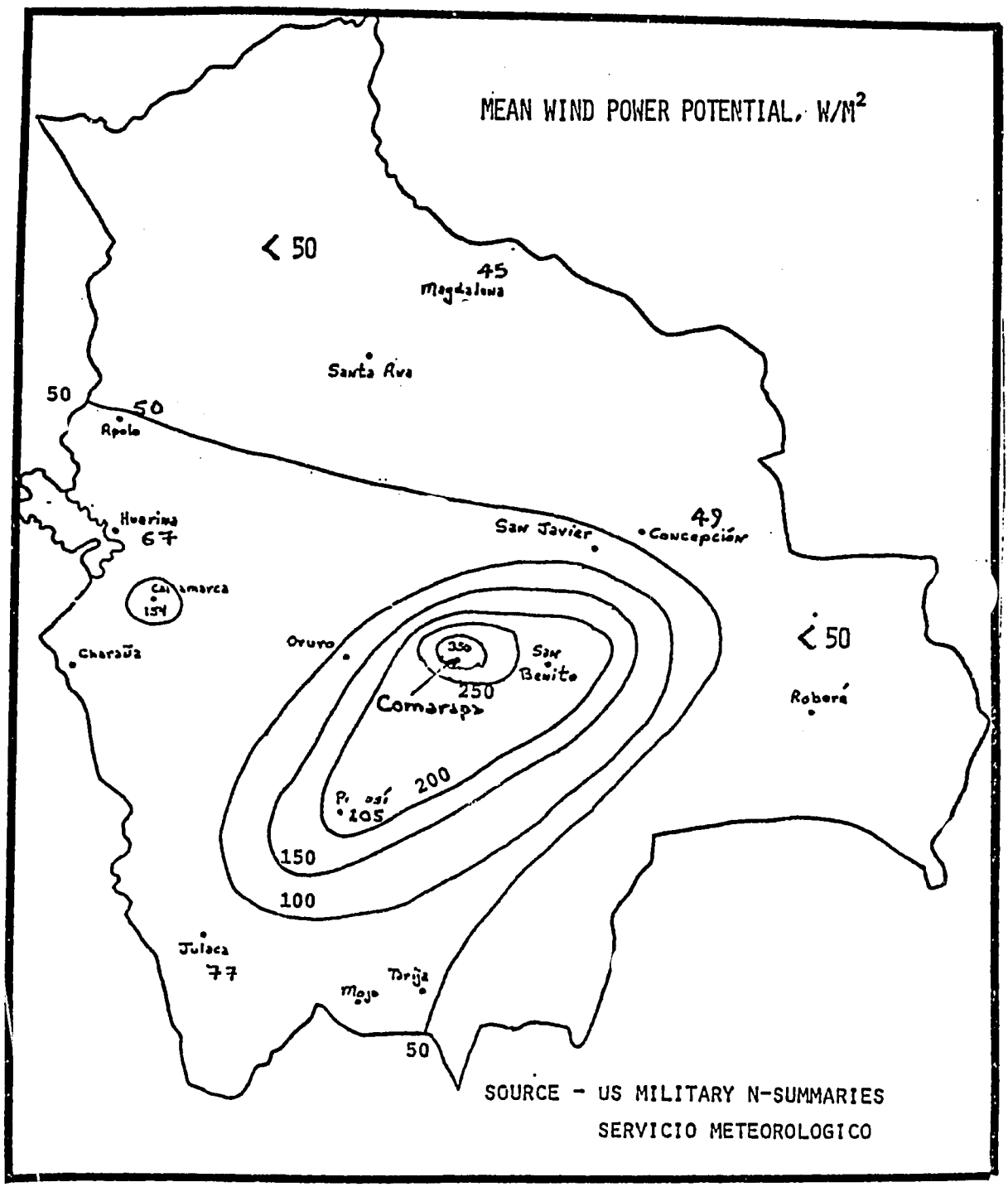

Map VI-5
Wind Power by Wind Direction in Bolivia

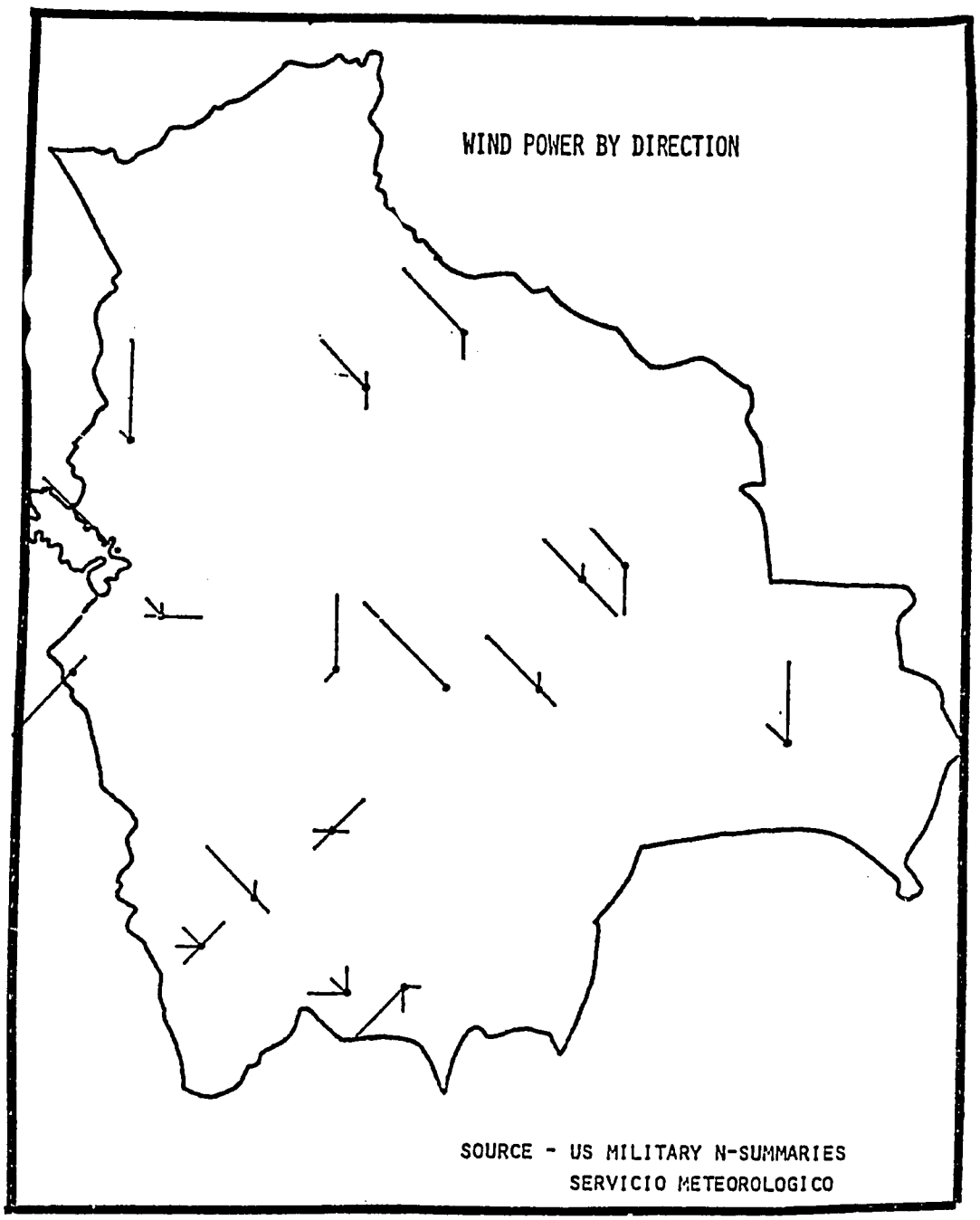

Figure VI-2
Graphs of Wind Power vs. Rainfall at Selected Locations in Bolivia

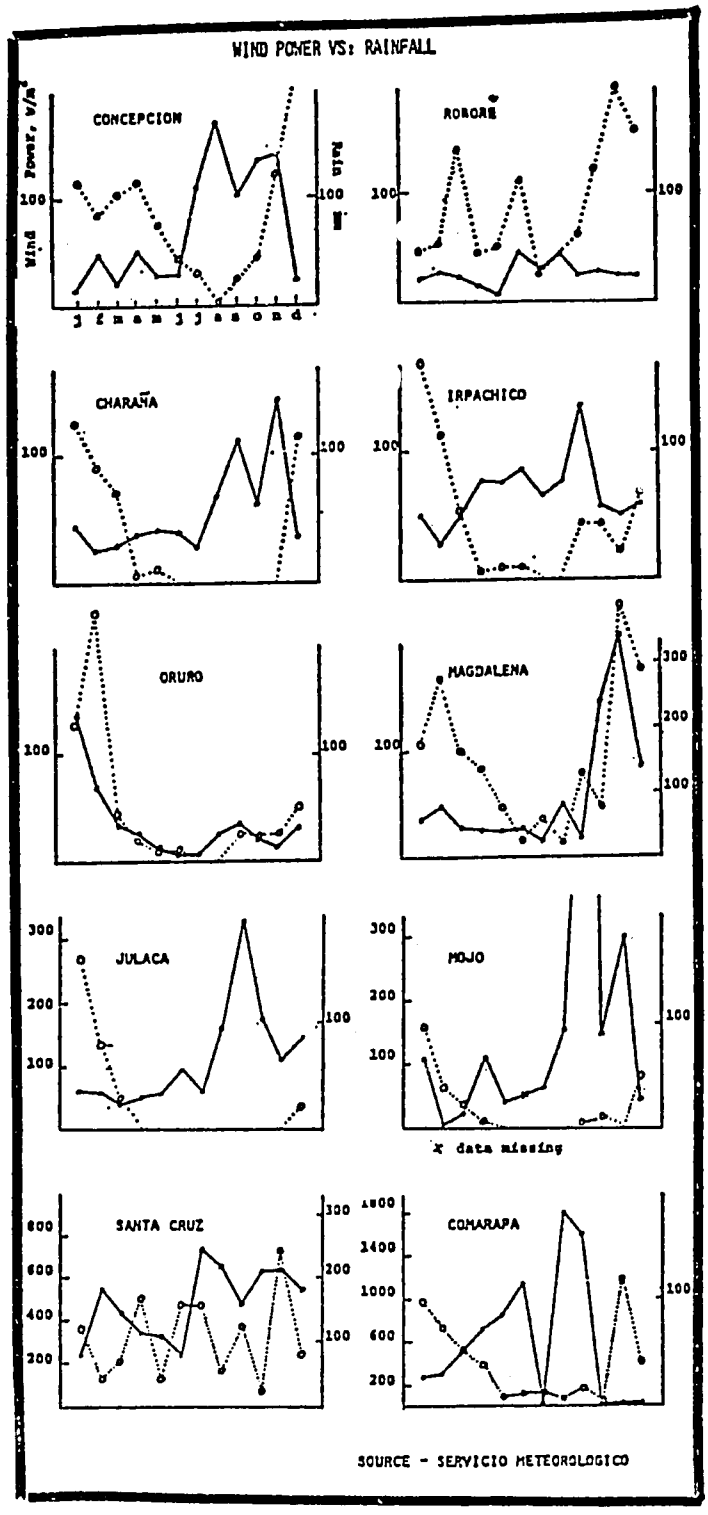

ENERGY DEVELOPMENT ACTIVITIES IN THE RURAL SECTOR

Energy "self-sufficiency" seems highly valued in the Bolivian countryside; any development activity which threatens to compromise this would be unsuccessful. In attempting to assess the potential for energy development activities in the rural sector, it is useful to consider situations which rural families currently perceive as problems.

Most rural families are reported to suffer from parasites linked to polluted water supplies. Drilled wells with hand pumps and evaporative solar distillations are two potential solutions to this problem. In certain areas of Bolivia, wood supplies for cooking and heating are scarce and the use of this resource results in continuing deforestation. Simple steel cooking/heating stoves and pressure cookers, as well as solar cookers could reduce these fuel requirements.

Beyond this, are areas of energy development which rural families may not perceive as problems, but where more efficient technologies built with locally available materials could make living conditions easier and more comfortable. Such areas include irrigation using hand, foot and windmill driven pumps; solar hot water heaters using a shallow wood box with a black plastic bottom and a clear plastic cover; home heating in the highlands using passive solar heating and insulation; and minimal DC electric light using photovoltaic cells and battery storage.

Enough groups are currently working with Bolivian campesinos to provide the necessary connections to introduce these new technologies. The programmatic initiative would be to construct and demonstrate these technologies in many rural locations in Bolivia.

ENERGY AT INVENTORY

CURRENT AT IN ENERGY

NAME: Storage Tanks as Passive Solar Water Heaters

LOCATION: Country-wide, Bolivia

DESCRIPTION: Many homes in Bolivia and through Latin America utilize water storage tanks on the roof to help maintain water pressure and supplies. Depending on their configuration, these tanks absorb solar energy during the day and the water is often quite warm by the afternoon. Through simple redesign, these could become effective passive solar water heaters. The most sophisticated of the tanks are fiberglass. These could be redesigned to maximize the surface area exposed to the sun and colored black. The 55-gallon oil drums often used could be painted black and mounted on their side for maximum exposure. A tap installed near the top of the drum could be used to draw off hot water.

NAME: Passive Solar Heating

LOCATION: Country-wide, Bolivia

DESCRIPTION: Many buildings in Bolivia are designed with large translucent skylights which serve as passive solar heating systems.

NAME: Traditional Peasant Energy Sources

LOCATION: Country-wide, Bolivia

DESCRIPTION: Timber and brush are sources of energy, and firewood use is important. Kerosene and gasoline are used, the latter to run grinding mills. Grain is dried using solar energy. (See AMARU IV, 1979, pages 47, 51 and 128).

NAME: SolBol Antifreeze Solar Water Heater

LOCATION: Santa Cruz, Bolivia

DESCRIPTION: SolBol reports they have been asked by the World Bank's Ulla Ulla project to develop and build a special solar water heating system which will use antifreeze.

This system will be tested and demonstrated in the construction of housing units which modify venacular architecture, in schools and in other facilities.

NAME: SolBol Flatplate Solar Water Heater

LOCATION: Santa Cruz, Bolivia

DESCRIPTION: SolBol manufacture solar domestic hot water heaters which use a flat plate, convective flow design. Two systems are offered, an 80 liter system with one collector for US$400 and a 150 liter system with two collectors for US$750.

The collector uses standard galvanized plumbing pipe with 1¼" headers and ½ or 3/4" pipes for heat exchange, which are soldered to a galvanized steel sheet painted flat black. The collector box is galvanized sheet metal and measures 190 cm long, with a reported area of $1.6m^2$ per collector. It is single glazed with 2" of fiberglass insulation on the sides and 4" in the bottom. Standard plumbing pipe fittings are used throughout and a backup electrical heating element is included.

The SolBol system has a collector surface area of $3.35m^2$ and costs approximately US$900 installed. With assumed 40% system efficiency, the time to simple payback is determined from

$$\frac{\text{installed system cost}}{\text{competitive cost of kw-hr x annual system output}}$$

Electricity cost increases, and operation and maintenance are assumed to cancel one another. See Table . (For more information on SolBol, see Institution section).

NAME: Hansa Generators and Pumps

LOCATION: La Paz, Bolivia

DESCRIPTION: Hansa distributes small gasoline and diesel generators and pumps. See Institution section for prices.

NAME: Bolivian Water Mills for Grinding

LOCATION: Between Cochabamba and Oruro, and other high valley areas, Bolivia

DESCRIPTION: Locally built water mills for grinding can be observed along the river-railroad line between Cochabamba and Oruro.

NAME: Washing Machine

LOCATION: Mennonite Colonies, Santa Cruz, Bolivia

DESCRIPTION: The colonists use a two chamber washing machine with wringer attached. The machine is driven by a small separate gasoline motor. There may be other models.

Figure VI-3
Washing Machine

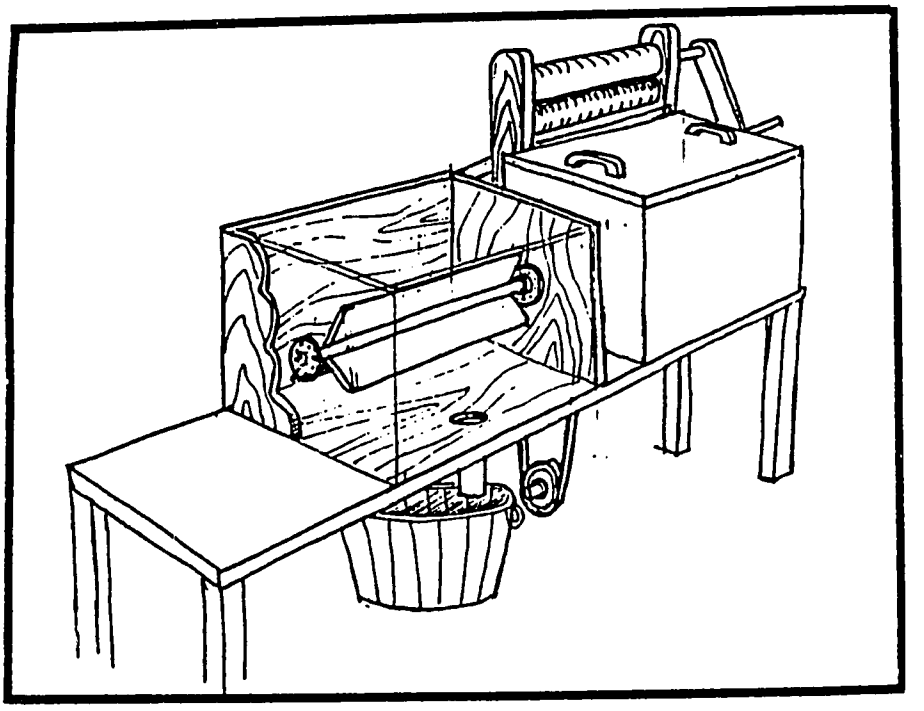

NAME: Wind System with Battery Storage

LOCATION: Country-wide, Bolivia

DESCRIPTION: Because Bolivia manufactures storage batteries, wind systems with battery storage represent a favorable situation in terms of foriegn exchange. The batteries essentially replace the diesel or gasoline generator in the parallel generation configurations. Such wind-battery systems produce energy at US$.15/kw-hr in 12 mph annual mean winds, and US$0.10/kw-hr in 14 mph winds. Present energy costs with a diesel generator at Trinidad are US$0.10 - 0.15 using subsidized diesel fuel. From this it may be assumed that wind-battery systems should be seriously considered for electrical systems in remote areas with 12 mph or greater mean annual windspeeds. The low maintenance requirements of a wind-battery system compared with a diesel or gasoline generator are also an important consideration.

NAME: Friesen Water Pumping Windmill

LOCATION: Mennonite Colony, Santa Cruz (see Institution Section), Bolivia

DESCRIPTION: The Friesen design utilizes an automobile differential for the crankcase speed reducer. The windmill's driving shaft can be switched from a water pump to a power take-off. (Figure illustratrates the principle). Friesen has built 20 of these to date, and all are used by Mennonite Colonists. The system has a 2.5 meter diameter rotor and a complete water pumping system including storage would cost approximately: windmill and stub tower US$250; tower US$125; pump, sucker rod, etc. US$100; 4 m^2 storage US$200; for a total cost of US$675. In Table VI-7 , Performance and Economics details, a 135' head, a 2" diameter cyclinder, and a 30-year life are assumed, and value is determined from the following formula:

$$\frac{\text{cost of system + operation and maintenance at 1\% per year}}{\text{lifetime system output}}$$

Value per kilowatt hour equivalent of energy delivered is determined by dividing the system cost by the energy output, or:

$$\frac{\text{water pumped (lbs) x head (ft.) x .746 x 8,760 hrs. x lifetime (years)}}{60 \times 33{,}000}$$

and multiplying this by an assumed electric motor efficiency of .8.

Table VI-7

AERMOTOR-TYPE PERFORMANCE AND ECONOMICS

MEAN ANNUAL WIND SPEED, MPH	LIFETIME SYSTEM OUTPUT GALLONS US X 10^3	VALUE PER KW-HR EQUIVALENT OF ENERGY DELIVERED
10	31,800	US $0.30
12	41,000	23
15	51,200	18

SOURCE: Aermotor Division of Braden Industries

But Freisen has not built windmills in the past two years because the heavy guage galvanized sheet metal he uses for the blades of the rotor is not available. He prefers to use gear ratios of 4 and 5:1 (rather than the 3.5:1 in standard designs) because it permits startup at lower wind speeds. Friesen's design could provide a model for fabrication anywhere metal working and tools are available.

NAME: Savonius Rotor and Aermotor Water Pumping Windmills

LOCATION: Scattered, Bolivia

DESCRIPTION: Both the Savonius rotor and Aermotor water pumping systems are only marginally less expensive than electricity where electricity is available. Where electricity is not available, however, these systems should be compared with small diesel or gasoline driven pumps. These windmills will provide water at roughly one-half the cost of the motors at mean annual windspeed in excess of 10-12 mph, and with far greater reliability. Both of these windmills have been used successfully in Bolivia, and their capital costs and energy production represent a savings in foreign exchange compared with the diesel-gasoline motor pumps.

NAME: Wind Electric System

LOCATION: Instituto de San Calipxto, La Paz, Bolivia

DESCRIPTION: See Institution section

NAME: COMBOL Solar Water Heater

LOCATION: Instituto de Investigaciones Fisicas, Universidad de La Paz, Bolivia

DESCRIPTION: This solar water heater is of a passive flat plain design and will soon be marketed under the name COMBOL.

ADAPTING **AT** IN ENERGY

The following energy technologies are in the process of design, testing and/or adaptation in research institutions in Bolivia:

NAME: Passive Solar Water Heater

LOCATION: CIFEMA, Universidad Mayor de San Simon, Cochabamba

DESCRIPTION: CIFEMA has constructed a simple hot water heating system used for hot showers which should be used as a model in rural development programs. It consists essentially of a wooden box-pan (measuring approximately 12' x 5'x 1' deep, constructed with 1½" lumber) on four 12'-14' posts. The bottom of the box-pan is insulated with sawdust and old newspapers. A sheet of black plastic (.0005") covers the sides and bottom and serves to convert short wave radiation to long wave and to provide a waterproof seal. The top of the box is covered with two layers of clear plastic (to keep the water clean and to reduce evaporation) over a sheet of chicken wire, which provides structural support to the plastic. A standard galvanized pipe carries water in, entering over the rim of the box-pan. There is a cut off valve. Above the cut off valve another pipe is connected with a "T" leading to the showers. Thus the pipe filling the box also serves to drain it to the showers. The cut off valve also serves to mix cold water with the hot water coming from the heater. The box has an overflow pipe. Pressure in the shower is produced by the height of the position of the box.

CIFEMA reports that on a sunny day the water is shower-hot from noon until 10 p.m. At 5 p.m. on the sunny day of our visit the water was almost too hot to touch.

This system could very simply be converted to act simultaneously as a solar heater and as a solar distillation system for providing potable water, by arranging the clear plastic cover in a sloping manner. This would enable the potable condensation which collects on the underside of the cover to run down slope and be collected. This concept could be applicable and beneficial to energy related problems of development in rural Bolivia.

The CIFEMA passive solar water heater is estimated to cost between US$50 and US$100 installed, depending on size and type of mounting, and on a sunny day will provide about 600 liters of hot water from mid-day through late evening. A definitive economic assessment is difficult because hot water is not available on demand and the amount of heat collected is difficult to determine. However, given that midday to late evening hot water supply is acceptable, this system will produce four times the hot water of the SolBol heater (See Energy Appropriate Technologies-Manufactured) at one-ninth the cost. Note that with only slight modification, this system may be used to both heat water and distill it into potable form.

Figure VI-4

Passive Solar Water Heater

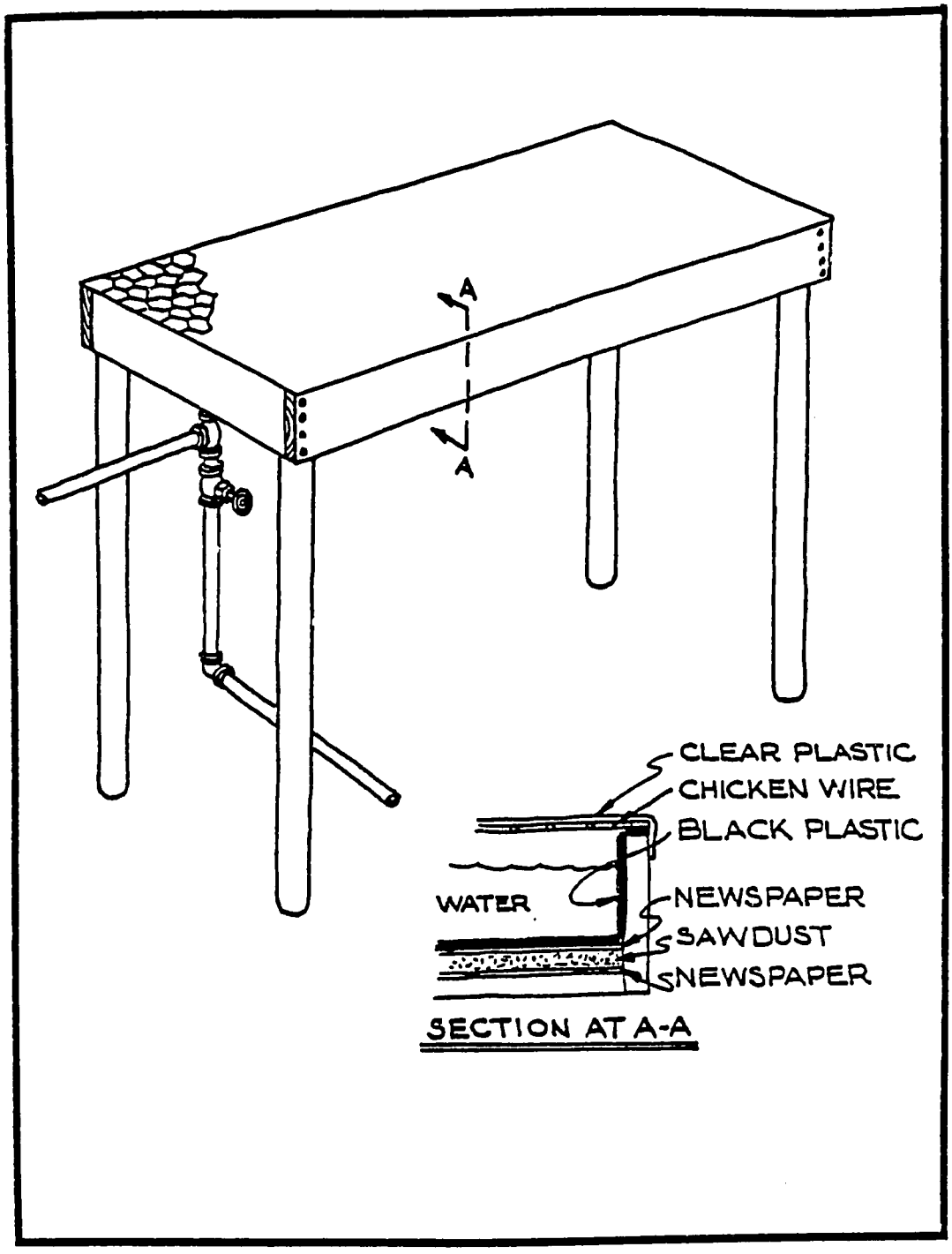

NAME: Solar Hot Water Heating Project

LOCATION: International Voluntary Service, Southwest Bolivia

DESCRIPTION: See IVS Institution Section, below

NAME: CIFEMA Biogas* Plant

LOCATION: CIFEMA, Universidad Mayor de San Simon, Cochabamba

DESCRIPTION: A group of students at CIFEMA have built a biogas plant as a thesis project. It will process the manure collected from the animals used in the animal traction program. The generated gas will be used as fuel for the school kitchen. The processed manure will be used as fertilizer on the agricultural plots.

The design used is Chinese, and one of the simplest that VITA experts have seen. It uses the most common building materials and very little reinforcing steel. It does not use the costly sheet steel gas holder that makes the Indian design too expensive for practical application. The design pamphlet was translated into English by SATA in Kathmandu, Nepal from the original Chinese publication (published by the Szechwan Provincial Institute of Industrial Building Design, People's Republic of China). The design pamphlet is quite thorough and written in simple language with step by step instructions.

Various size digesters are possible from the same design. The dimensions are tabulated for easy reference. There are several variations for different strengths of building materials, including one that can be cut into native soil if soil conditions are correct. The unique feature of the design is an arched dome roof which is buttressed into the native soil and requires no reinforcing steel. Two methods of forming the dome are given: one is to shape the earth as a form, cast the dome and to later excavate out from underneath it. The second is a unique system of form work using bamboo or saplings, with packed earth on top for the final curved shape. The only reinforcing steel used are a few bars in the lid of the manhole on top of the dome.

The pamphlet also contains plans and construction procedures for a simple ball digester that could be used by an individual family or as a pilot model to do a feasibility study for a larger community digester. In addition there are plans for a simple gas light that could be manufactured locally. No cost figures were available on the CIFEMA digester. They had used the most conservative design with extra concrete and bricks. They wanted a fail safe structure for their first attempt. The value of purchased materials is estimated at $b4,000 (US$200). Labor and local materials would be additional. Further development work could reduce construction costs to a minimum level.

*Biogas is a mixture of methane (CH_4) and carbon dioxide (CO_2) in a ratio of about 2:1 (66% methane-34% carbon dioxide). Biogas is a by-product of anaerobic decomposition of organic materials (action of bacteria on organic matter when no oxygen is present). A container that holds organic material in an oxygen free environment while it decomposes is called an anaerobic digester.

As construction was just being completed when the VITA experts visited, they were unable to view the digester in operation. Any true potential would have to be demonstrated by successful operation with adequate gas production in order to justify the expense and labor requirements involved. The most probable limiting factor is temperature. Since the digester is buried in the ground it will operate at ambient soil temperature. Cochabamba has a warm, but not hot climate. CIFEMA did not know what the average soil temperature was at the center (usually a constant with minimal fluctuation). Anaerobic bacteria are inactive below 65°F (18°C), and gas production increases as temperature rises. Digesters would probably be more practical in warmer climates as in Santa Cruz, Beni or Pando. In addition, the economics of digesters would be more viable in remote jungle communities where bottled gas is unavailable or excessively expensive.

Figure VI-5

Biogas Digester

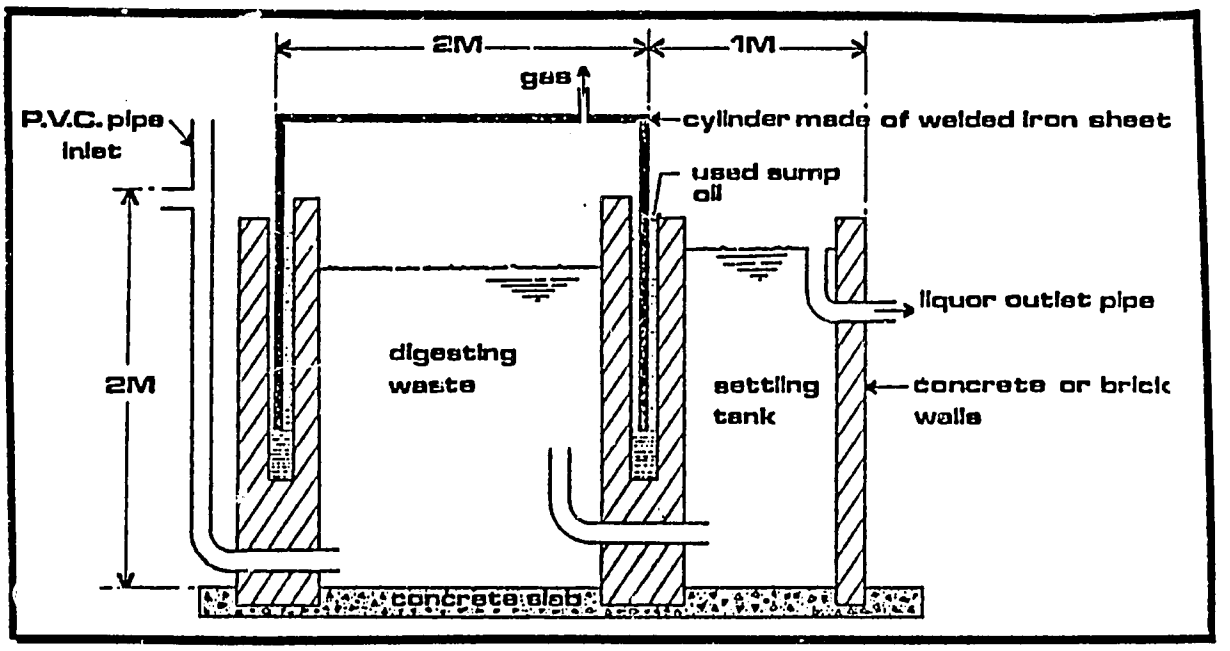

NAME: Kerosene Lamps, etc. from Recycled Aircraft

LOCATION: Mennonite Colonies, Santa Cruz

DESCRIPTION: Aluminum products such as buckets, gasoline cans, wash basins, etc. are made in the Mennonite Colonies. One of the colonists buys crashed aircraft and uses all the parts. Kerosene barnyard lamps are homemade except for the glass cylinder. Also homemade are a metal tortilla maker (a hand press which can also be made from wood), waffle irons and garden hoes.

NAME: Geothermal Energy

LOCATION: Salar de Uyuni, Potosi

DESCRIPTION: Investigations into geothermal energy potential are taking place at Salar de Uyuni, according to Roger Levy of DINE.

NAME: Radiation Measurement Device

LOCATION: Empresa Nacional de Electricidad S.A. (ENDE)

DESCRIPTION: None

NAME: Solar Furnace

LOCATION: Instituto de Investigaciones Fisicas, (IIF) Universidad Mayor de San Andres, La Paz

DESCRIPTION: IIF has built a 2.5 x 2.5 meter solar furnace for mineral analysis which reaches 850°C for tin analysis using iron with nickel. Now they plan to use 5 m size mirrors to reach the temperature of 2500°C for other analysis. A domestic and industrial group is also interested in water heating, space heating and mineral drying.

NAME: Solar Thermal Pump

LOCATION: Colegio San Calixto, La Paz

DESCRIPTION: See San Calixto, Institution Section, below

NAME: Solar Thermal Freon Loop Water Pump

LOCATION: Instituto de Aprendizaje Industrial, Oruro

DESCRIPTION: A solar thermal, freon loop water pump is being designed by Professor Francisco Dias who plans to begin the construction of it soon.

NAME: Solar Heating in the Altiplano

LOCATION: Ulla Ulla Rural Development Project

DESCRIPTION: Twenty-seven school houses will have solar panels for heating.

NAME: San Calixto Windmill

LOCATION: Colegio San Calixto, La Paz

DESCRIPTION: An experimental windmill with propeller-like arms was built, but did not function very well and was dismantled.

NAME: Aermotor-type Windmill

LOCATION: Tiquina Mission, Tiquina, La Paz

DESCRIPTION: See Canadian Baptist Mission, Institution Section, below

NAME: SWD Windmill, variation

LOCATION: Colonia Pirai, Santa Cruz

DESCRIPTION: This windmill is built from a design by the Steering Committee for Wind Energy in Developing Countries (SWD) of Eindhoven, The Netherlands.

The design uses a 20' diameter rotor with 8 fabric blades. The frame is of 3/4" angle iron, rather than wood as in SWD's design.

The well from which the machine is to pump is about 20-25' deep. They plan to increase the depth of the well.

NAME: Animal-Driven Power Take-Off

LOCATION: Mennonite Central Committee demonstration farm, near Santa Cruz

DESCRIPTION: It consists of a horizontal structure resting on a central pivot, which is pushed by animals. Power is transmitted by a belt around the horizontal structure to some pulleys. As the horizontal structure is 5-6 m diameter and the pulley small, it speeds it considerably. Power is then taken up from a large pulley on the same axle as the receiving pulley. This is larger, thus increasing its power. Actually the installation is not operative and seems never to have been very effective. It would probably function better if some of the speed and power are sacrificed by placing a smaller power pulley on the same axle as the horizontal structure. It would have to be well above the heads of the animals or the transmission belt would interfere with the walking animals.

NAME: Animal Traction Water Pump

LOCATION: CIFEMA, Universidad Mayor de San Simon, Cochabamba

DESCRIPTION: An animal traction water pump was designed by CIFEMA. It is constructed from wood, old truck tires as a diaphragm, bolts and some pipe. The pump is not now in operation.

SUGGESTED AT IN ENERGY FOR TRANSFER TO BOLIVIA

The following energy technologies do not now exist in Bolivia, and are suggested by Steve Blake as appropriate for introduction there:

NAME: Wells with Hand, Foot or Bicycle Operated Pumps

DESCRIPTION: For irrigation of small plots, small pumps probably will be most useful in small schemes irrigated by wells where the topography is not too level. Hand, foot or bicycle operated pumps should be very useful in irrigating small plots, which could not be dominated by a pure gravity system. This would cut down on the length of the canal and even make some systems, where water is available but the topography is not favorable to gravity flow distribution, feasible.

Drilled wells with hand pumps and evaporative solar distillation are felt to be two potential solutions to the problem of parasites linked to polluted water supplies.

Figure VI-

IRRI Hand Operated Bellows Pump

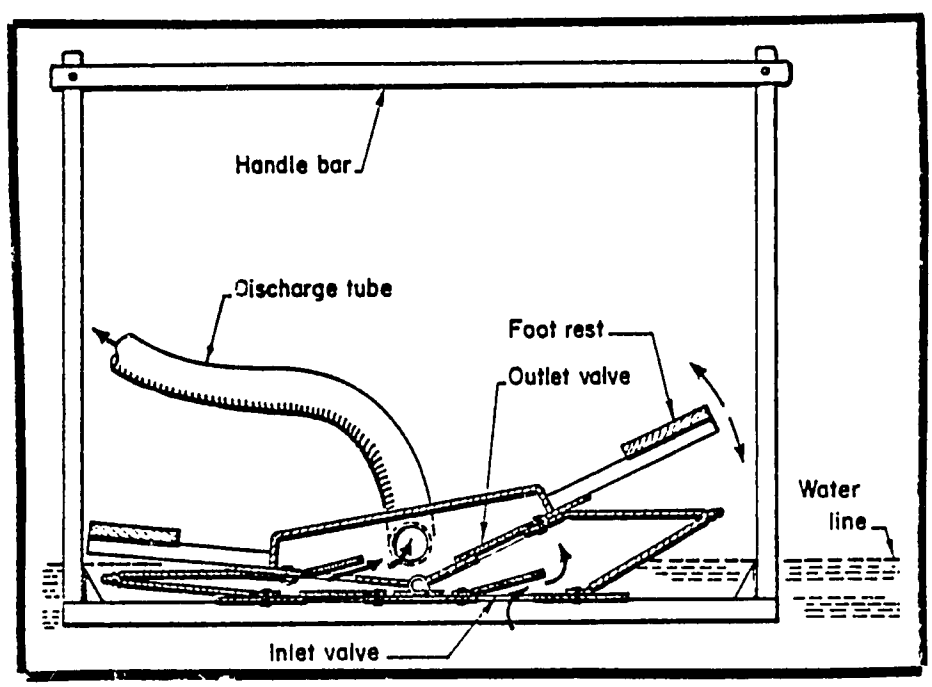

NAME: Solar Grain Dryer

DESCRIPTION: While solar grain dryers would be appropriate in many parts of the country, they might be most useful in tropical regions, where humidity is often high and rain interferes during drying periods. Even in higher areas radiation intensity is high and a dryer would be very effective.

Dryers have been used in many parts of the world. They have been successful in reducing moisture in grain from 25% to 12% in one day or less (but this quick drying could damage rice quality). Dryers can also be used to dry copra, yuca, fruits, and vegetables, etc.

Figure 7 shows a solar grain dryer from a VITA (1979) booklet: No. 54E. The cost of this dryer varies from US$20 to US$150, including materials and labor (in the United States).

It can be built in three hours by skilled labor and in eight hours by unskilled.

Figure VI-7
Solar Grain Dryer

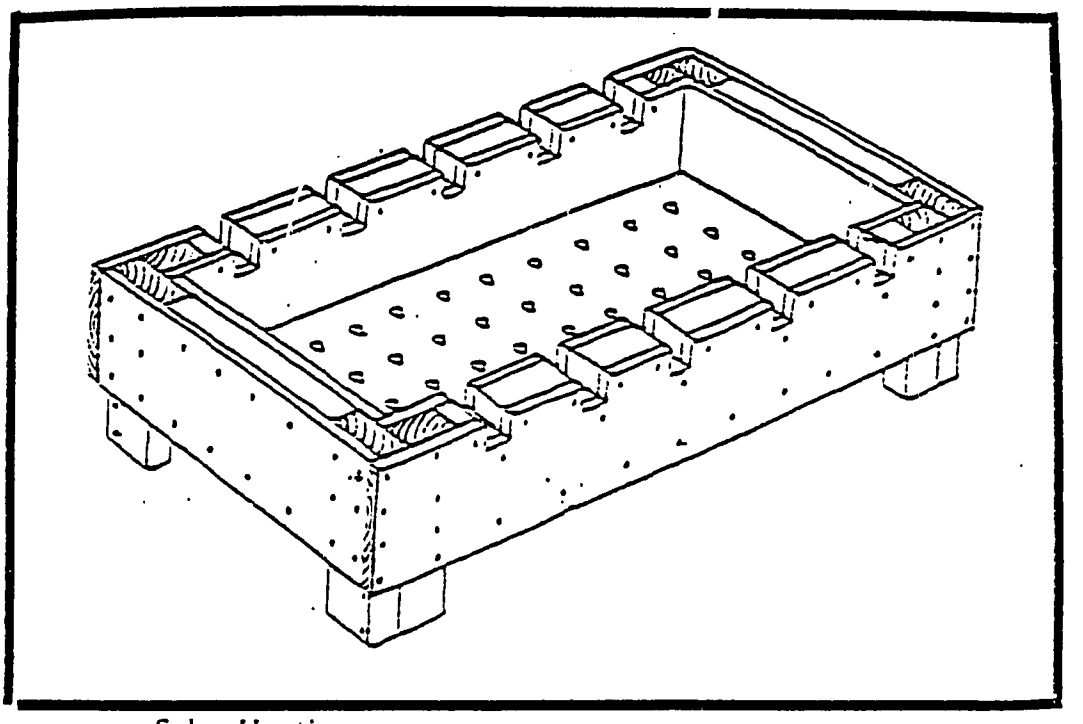

NAME: Solar Heating

LOCATION: In the Altiplano

DESCRIPTION: Houses built with stone or adobe walls will be easier to heat, as walls retain the day's heat and release it slowly, making the house less cold at night.

NAME: Hand-powered Grain Mill

DESCRIPTION: Grain grinding mills are available for use in AT technology. They are simple and inexpensive. Some simple water driven mills were observed in Bolivia. These mills ground grain at commercial prices. The figure below is an example of a mill which could be easily constructed in the home.

Figure VI-8
Hand-powered Grain Mill

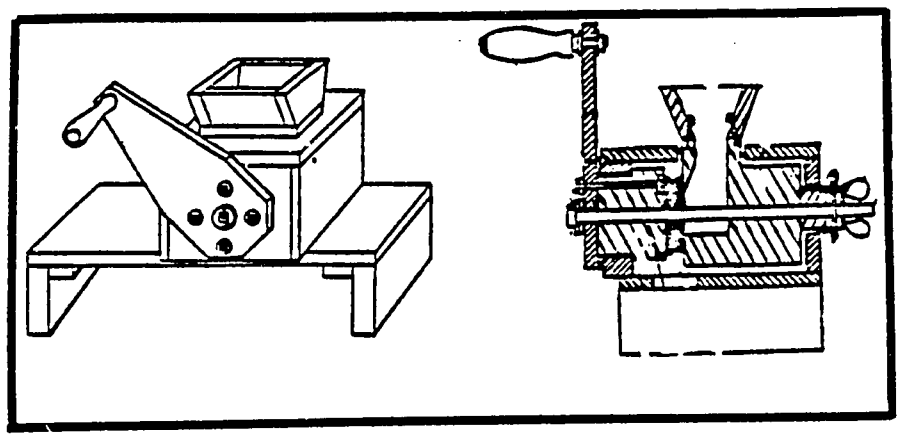

NAME: Steel Cooking/Heating Stoves, Pressure Cookers and Solar Cookers

DESCRIPTION: Simple steel cooking/heating stoves, pressure cookers and solar cookers could reduce demands on scarce wood fuel supplies for cooking and heating, and they demand far less in the way of time and resources.

NAME: Rooftop Water Storage Tank/Passive Solar Collector

Rooftop water storage tanks used throughout Bolivia to maintain water pressure and supplies could be simply modified to be more effective passive solar collectors. The most sophisticated of these are made of fiberglass, and could be redesigned to maximize the surface area exposed to the sun, and colored black. The 55 gallon oil drums often used could be painted black and mounted on their side for maximum exposure. Water is typically drawn off the botton and is cooler; and a separate tap near the top could be used to draw off hotter water.

NAME: Phylon Roofing

LOCATION: Country-wide, Bolivia

DESCRIPTION: A number of homes in Bolivia use corrugated, translucent fiberglass roofing (phylon) which acts quite effectively as a passive solar heating system. The simplest of rural homes often use corrugated metal roofing which, because of its metalic finish, acts as a solar energy reflector. The concept of phylon on roofs in rural areas coupled with the heat absorbing qualities of adobe bricks warrants consideration in development planning.

Given the technical feasibility of this concept, the cost would be the differential between corrugated metal and phylon roofing plus any subsequent decrease in lifetime.

NAME: Small Photovoltaic Systems with Battery Storage

DESCRIPTION: Very small photovoltaic-battery systems are felt to be of interest for two reasons: First many development workers insist that electric lights yield great benefit. Second, photovoltaic economics appear somewhat favorable in terms of certain aspects of the Bolivian situation.

Development Associates, Inc., reports that ELFEC of Cochabamba in 1975 had 5,400 residential consumers (about 15% of total) who used less than 3 kw-hrs./month. There were also 1,554 business (over one-half of total) that used less than 3 kw-hrs/month. This level of demand would power one 25 watt light bulb for 4 hours an evening. Assuming this low level of demand by such a large number of people is representative, then the photovoltaic solution seems worthy of investigation.

Recent USAID rural electrification projects provided service at a reported cost of US$700/customer. Photovoltaic costs have dropped to US$30/peak watt in bulk purchases, so assuming the cost of a 1 kw-hr Bolivian-made battery and a diode at US$100, a 20 peak watt capacity photovoltaic system could be installed for US$700. Assuming the cells are moved manually several times daily to maximize input at 85% of available energy, the energy available from the system (assuming 80% battery efficiency and using the Servicio Nacional sun hour data) would be about:

Altiplano:	2.7-3.0 kw-hrs/mo.
Yungas :	1.8 kw-hrs/mo.
Llanos :	2.1-2.3 kw-hrs/mo.

NAME: Alcoa Model 1298329 Wind Electric System

DESCRIPTION: Large wind electric systems, such as the Alcoa, used in parallel generation with diesel powered systems will demonstrate better than a six year payback in Bolivia where sea level mean annual wind speed exceeds 14 mph and where diesel costs are US$0.30/liter, or where diesel costs are US$.50/liter and sea level mean speeds are greater than 12 mph. The Comarapa, Calamarca, Santa Cruz and Potosi regions exhibit wind speeds of this magnitude. Further, numerous other areas for which wind speeds are not known quite likely have mean annual wind speeds in excess of 12-14 mph. The cost FOB installed of this system is US$175,000. See Table 8 for performance and economic details.

Table VI-8

ALCOA PERFORMANCE AND ECONOMICS
MODEL 1298329

MEAN ANNUAL WIND SPEED,* MPH	ANNUAL OUTPUT KW-HRS	DIESEL FUEL SAVINGS AT 3 KW-HRS PER LITER	at US$0.30/liter		at US$0.50/liter	
			SAVINGS US$/YEAR	PAYBACK PERIOD YEARS	SAVINGS US$/YEAR	PAYBACK PERIOD YEARS
10	136,100	45,367	13,610	20.6	22,684	12.4
12	287,700	95,900	28,700	9.8	47,950	5.8
14	475,300	158,433	47,530	5.9	79,217	3.5
16	724,000	241,333	72,400	4.1	120,667	2.5
18	1,127,000	375,667	112,700	2.5	187,833	1.5
20	1,276,000	425,333	127,600	2.2	212,667	1.3
22	1,530,000	510,000	153,000	1.8	255,000	1.1
24	1,766,000	588.667	176,600	1.6	294,333	.9

SOURCE - ALCOA PRODUCTION EQUIPMENT LABORATORY * Sea level density assumed.

The Alcoa and Enertech (see below) systems for parallel generation are evaluated in Tables and , respectively, in terms of operation to simple payback based on the following formula:

$$\frac{\text{System installed cost}}{\text{first year fuel savings}} = \text{years to pay back}$$

Real diesel fuel costs to the Bolivian economy of b$6 - b$10 per liter and a diesel generator fuel consumption rate of one liter per three kw-hrs will be used. Installed wind systems cost figures for Bolivia are 1.6 of factory FOB installed costs based on USAID guidelines.

NAME: Enertech Model 1500 Wind Electric System

DESCRIPTION: See Table 9 for performance and economic details. The FOB installed cost is US$5,000.

Table VI- 9

ENERTECH PERFORMANCE AND ECONOMICS

MEAN ANNUAL WIND SPEED MPH	ANNUAL OUTPUT KW-HRS	DIESEL FUEL SAVINGS 3KW-HRS/liter	US$0.30/liter		US$0.50/liter	
			SAVINGS US$/YR.	PAYBACK PERIOD YEARS	SAVINGS US$/YR.	PAYBACK PERIOD YEARS
8	1,100	367	110	72.7	183	43.7
10	2,365	788	236	33.9	394	20.3
12	4,205	1,401	420	19.0	700	11.4
14	5,775	1,925	578	13.8	963	8.3
16	7,350	2,450	735	10.9	1,225	6.5

SOURCE: Enertech Corporation

NAME: Jacobs Wind Electric System

DESCRIPTION: The Jacobs system is 110 VDC, 3.5 kw at 27 mph, with a 14' diameter rotor. Cost is US$5,400 FOB. A 25 kw-hr Bolivian-made storage battery would be used, estimated at a cost of US$2,500 FOB La Paz. The Jacobs would be mounted on a 50' guyed wood pole (installed cost US$1,000). Total system cost (1. 6 x $5,400 only) would be US$12,140.

See Table 10 for performance and economic details.

Table VI-10

JACOBS PERFORMANCE AND ECONOMICS

MEAN ANNUAL WIND SPEED MPH	OUTPUT OVER 15 YEARS, KW-HRS	VALUE PER KW-HRS US$
8	34,493	0.35
10	50,589	.24
12	82,782	.15
14	119,574	.10
16	149,468	.08
18	193,158	.06

SOURCE: Dakota Wind and Sun

In Table 10 , the value of this system in US$/kw hour over an assumed fifteen year life is determined by:

$$\frac{\text{system cost + operation and maintenance (1\%/yr.)}}{\text{lifetime output, kw hours}}$$

NAME: Savonius Rotor Water Pumping System

DESCRIPTION: The Savonius system has a swept area of 18 feet. See Table for performance and economic details. For purposes of analysis, the Table assumes that the system has a life of ten years and is used with a 10' head. A complete installed system is assumed to cost US$200 and operation and maintenance is assumed at 2% per year. Value and kilowatt hour equivalents are calculated from the following formula:

$$\frac{\text{cost of the system + operation and maintenance}}{\text{lifetime system output}}$$

Value per kilowatt hour equivalent of energy delivered is determined by dividing the system cost by the energy output, or:

$$\frac{\text{water pumped (lbs.)} \times \text{head (ft.)} \times .746 \times 8{,}760 \text{ hours.} \times \text{lifetime (years)}}{60 \times 33{,}000}$$

and multiplying this by an assumed electric motor efficiency of .8.

Table VI-11

SAVONIUS ROTOR PERFORMANCE AND ECONOMICS

MEAN ANNUAL WIND SPEED, MPH	LIFETIME SYSTEM OUTPUT GALLONS US X 10^3	VALUE PER KW-HR EQUIVALENT OR ENERGY DELIVERED
10	28,900	US$.38
12	39,420	.26
15	52,560	.21

SOURCE: Brace Research Institute

NAME: 2 Kilowatt Wind Electric System

DESCRIPTION: Small (2 kw) wind electric systems for parallel generation demonstrate payback periods of less than 10 years at wind speeds in excess of 16 mph (US$0.30/liter fuel) and 13 mph (US$0.50/liter fuel). This greatly restricts their range of application. However, 8 kw systems with 10 meter diameter rotors are expected to be available in 1980, and will yield 6 year payback at 13 mph and 15 mph respectively.

NAME: Lambrecht or Cassella Anemometers

DESCRIPTION: Run-of-wind, odometer-type anemometers of an all-mechanical design, such as those manufacturer by William Lambrecht of West Germany or by Cassella of Great Britain are recommended for measuring wind energy potential. While more expensive than their electrical counterpart, these mechanical systems are far more reliable.

NAME: Additional

DESCRIPTION: Additional suggested energy technologies are:

- low-cost battery/photovoltaic systems for low consumption energy needs
- wind generators, where total power demand is 500 watts
- methane gas digesters, for cooking, lighting, fuel for production processes (in warmer climate areas)
- pedal-power and its many applications
- water wheels for direct power needs
- micro water turbines for small-scale electricity generation
- animal traction for power take-offs, raw-material mixing and processing, transportation technologies and casting, etc.
- solar ovens, heaters, distillers, dryers for production
- parabolic solar high temperature water heaters
- portable solar beeswax purifiers to supply industries, as in production of batik, candles, shoe polish, cosmetics, etc.
- kiln design, rice hull ashes for insulation
- rice hull cookers
- solar heated public clothes washing facilities
- solar heated public bath houses
- passive solar heating for home heating in the highlands

CHAPTER SEVEN: INSTITUTIONS SECTION

This chapter presents reports on the institutions surveyed, describing their current and potential activities in the Appropriate Technology field. Each institution surveyed is summarized with a KEY, displaying the sector into which its activities fall and its present potential AT initiatives in research, technical assistance ("TA"), documentation, manufacture, construction or sales, dissemination or training. The name, address and other identifications are given for each.

Among the types of institutions surveyed were the following:

- Government of Bolivia
  - Ministerial Level
  - Regional or Departmental Level
  - Prefect Level
- Educational Institutions
- Bolivian Private Non-Profit Organizations
- International Organizations
- Non-Profit and Private Voluntary Organizations with Religious Affiliations
- Cooperatives and Communities
- Private Businesses

GOVERNMENT OF BOLIVIA

MINISTERIAL LEVEL

MINISTERIO DE MINAS MINERIA Y METALURGIA (Ministry of Mines and Metals)

DEPENDENCY SURVEYED:

GEOBOL - SERVICIO GEOLOGICO DE BOLIVIA

Sector	
AGRICULTURE	[x]
SMALL SCALE INDUSTRY/ARTISANRY	[ ]
WATER & SANITATION	[ ]
ENERGY	[x]

	Present	Potential
AT Initiative	[ ]	[ ]
Research	[x]	[x]
TA/Demonstration	[ ]	[ ]
Manufacture/Construction	[ ]	[ ]
Dissemination/Training	[ ]	[ ]

NAME: SERVICIO GEOLOGICO DE BOLIVIA (GEOBOL) Programa de Satelite Tecnológico de Recursos Naturales (ERTS)--Geological Services of Bolivia, Earth Satellite Program for the Study of Natural Resources

ADDRESS: Casilla 2729
La Paz, Bolivia

CONTACT: Dr. Carlos E. Brockman, Director

AT INITIATIVE: GEOBOL/ERTS applies sophisticated earth satellite technology to the problem of surveying Bolivia's resources. The following complete maps of Bolivia have been generated by this super agency:

Map	Scale
Geological	1:1,000,000
Land Use	1:1,000,000
Land Use	1:4,000,000
Oriente-Land Complex (land form, vegetation, soils)	1:250,000

These maps are done with the use of the most modern and sophisticated technology available. However, in their preparation all field ground data have been incorporated These maps are excellent for overall planning. Land use maps show salinity in some soils. Soils maps based on land forms go down to sub-groups according to the new USDA taxonomy. Geology goes to the level of systems.

COMMENTS:

These maps are using the most modern technology available. They are useful for an overall picture. To many scientists the ERTS program is too much gadgetry. The danger is that non-scientific decision makers will think that the ERTS program delivers all the information needed, which is not the case. As an example: Bolivia has been mapped geologically in its mining areas over an area of 400,000 sq. km on 1:50,000 maps. This work was financed by USAID. However, these maps are available only in the originals, which are deteriorating, and have never been published. Apparently, no funds have

become available for their publication as everyone is fascinated by the new technology. However, the satellite maps are no substitute for the larger scale maps prepared with field work. As the originals are deteriorating, this information is in danger of being lost. Similarly, satellite maps are no substitute for soils maps done from aerial photographs and/or by field work. At best they present the overall picture.

MINISTERIO DE ASUNTOS CAMPESINOS Y AGROPECUARIOS (MACA -- Ministry of Campesino Affairs and Agriculture)

DEPENDENCIES SURVEYED:

IBTA -- INSTITUTO BOLIVIANO DE TECNOLOGIA AGROPECUARIA

IBTA Agriculture Experiment Stations:

CIAT

PATACAMAYA

SAN BENITO

TORALAPA

LA JOTA

BIBLIOTECA NACIONAL AGROPECUARIA

DIRECCIÓN DEPARTAMENTAL DE RIEGO

SNDC -- SERVICIO NACIONAL DE DESARROLLO DE COMUNIDADES

PROYECTO CHAPARE, INSTITUTO NACIONAL DE COLONIZACION/OAS

PROYECTO DE DESARROLLO RURAL INTEGRADO INGAVI

Sector	
AGRICULTURE	[X]
SMALL SCALE INDUSTRY/ARTISANRY	[ ]
WATER & SANITATION	[ ]
ENERGY	[ ]

AT Initiative	Present	Potenti
Research	[x]	[x]
TA/Demonstration	[x]	[x]
Manufacture/Construction	[ ]	[ ]
Dissemination/Training	[x]	[x]

NAME: INSTITUTO BOLIVIANO DE TECNOLOGIA AGROPECUARIA (IBTA -- Institute of Agricultural Technology)

OFFICE ADDRESS: Ministerio de Asuntos Campesinos y Agropecuaria
Av. Camaacho
La Paz, Bolivia

CONTACT: Ing. Agr. Francisco Pereira, Executive Director

INSTITUTIONAL SUMMARY: In December 1975, MACA's Extension and Research Services were combined to create IBTA. It began operation in May of 1976.

IBTA is autonomous in its technical, administrative, economic and financial affairs. It is governed by a Board of Directors headed by the Minister of Agriculture and including representatives of the Ministries of Planning, Finance and Industry, and of campesino organizations, the private agricultural sector and the planning office of MACA.

IBTA serves the whole of Bolivia save the Department of Santa Cruz, where its functions are carried out by the Centro de Investigaciones de Agricultura Tropical (CIAT) (See Institutional Report on CIAT, below).

IBTA's budget in 1979 was b$63,600,000 plus b$14,000,000 for CIAT. An Inter-American Development Bank loan for US$8,500,00 is mostly for buildings and research facilities. A USAID project for US$18,230,000 over a five year period, including old and new money from the Government of Bolivia, will cover technical assistance, equipment, training and construction.

At present IBTA has 411 employees:

Agricultural Engineers	
Ing. Agr. - Ph.D	1
Ing. Agr. - M.Sc.	21
Ing. Agr.	62

Graduate Students	
Egresados (completed studies, but have not presented their thesis for Ing. Agr.)	89
Sub-Professionals	
Peritos (sub-prof. technicians)	54
Other Technicians	11
Administrative	45
Secretaries	19
Drivers	14
Mechanics	9
Tractor Drivers	7
Workers	79
TOTAL	411

A Table of Organization is given in Figure VII-1 . A list of the Agricultural Experiment Stations operated by IBTA is given in Table VII-1

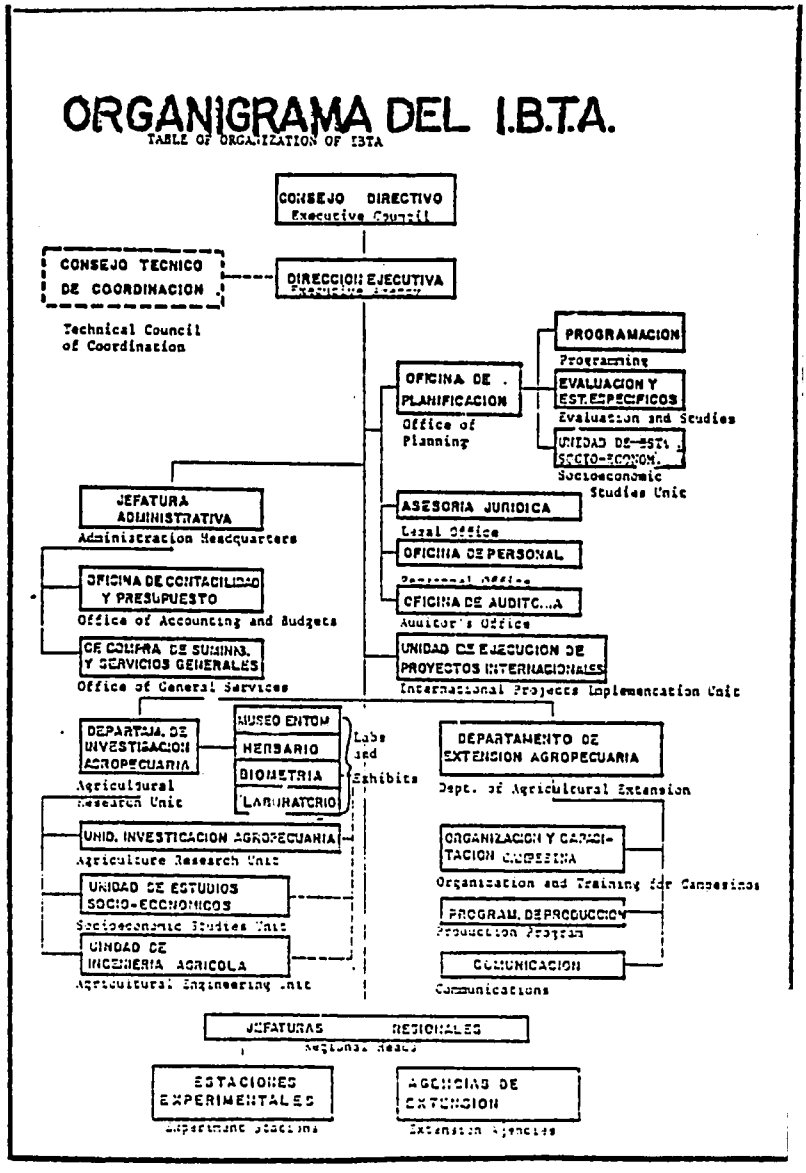

Table VII-
IBTA- CIAT Agriculture Experiment Stations

STATION	LOCATION	YEAR ESTABLISHED	ALTITUDE (m)	PRINCIPAL WORK
Belén	Northern Altiplano Department of La Paz	1946	3,400	Cultivos Andinos, potatoes, barley, cattle (Brown Swiss), alpacas
Patacamaya	Central Altiplano on way La Paz-Oruro Department of La Paz	1953	3,700	Quinua, cariahua (similar to quinua), habas (broadbeans), forages, pasture, sheep, cameloids, chinchillas
Coroico	Low altitude Department of La Paz		1,700	Cafe, citrus, vegetables
Sapecho	Alto Beni Department of La Paz			Cacao, coffee, citrus
Chipiri	Sub-tropical - high rainfall (to 7,000 mm) Department of Cochabamba	1964	300	Pigs, milk, cattle, pastures, forages, possible hay production. 2 Ing. Agr., 1 Sub-Professional
La Jota	Chaparre Tropical (3,000mm) Department of Cochabamba	1976	230	Production systems, multiple cropping, including coffee, cacao, soya, palms, rice, corn, pineapple (coca substitutes) citrus, bananas, rubber, beans, water-buffalo
San Benito	High Valley, Km. 16 on Road to Santa Cruz Department of Cochabamba	1963	2,600	Pomology (peach, apples, grapes) wheat, barley, oats, rye, irrigation 15 Ing. Agr. and Egresados
Toralapa	Km 70 Road to Cochabamba, Department of Cochabamba	1962	3,800	Potatoes, cultivos andinos, sheep, pasture, 6 Ing. Agr. and Egresados, 1 sub-profession
Chinoli	South Altiplano Department of Potosí	1962	3,400	Wheat, barley, potatoes, pasture (works with San Benito)
Riberalta	Amazonan Rain Forest Department of Beni	1952	420	Rubber, castaña
	(This station is inside the city and is being changed to Maral about 60 km from Riberalta).			
Maral	Tropical Rain Forest Department of Beni	1979		Rubber, cacao, African oil palm, tropical cattle and pasture
Peroto	Tropical, 70 km from Trinidad, Department of Beni	1978		It is new and has problems with floods. Will probably be moved.
Yacuiba	Humid Chaco, 1,000 mm Department of Tarija		700	Oil crops (peanuts, soya)
Saavedra	(CIAT) near Santa Cruz Department of Santa Cruz	1948	400	Rice, corn, oil crops

SOURCE: IBTA

SPECIAL PROGRAMS: IBTA presently has 98 Extension Agencies, including seven in Santa Cruz which are under CIAT. The number of Agencies will increase to 150 under Government of Bolivia and Inter-American Development Bank financing, and to 300 with USAID funds.

In the Department of Cochabamba, IBTA has twenty Extension Agencies. There is one Extension Agency in each Experiment Station. About half of the Extension Agents are Ing. Agr. or Egresados, the remainder are sub-professionals. Ing. Agr. Perez is the Regional Director of IBTA in Cochabamba.

In the Cochabamba area, IBTA receives the following technical assistance:

- Consortium for International Development (CID), a group of Western United States Land-Grant Colleges, assist at San Benito and Toralapa Experiment Stations with a plant pathologist, a potato agronomist and a cereal agronomist

- COTESU (Swiss Technical Assistance): Three pomologists, one grape specialist, and two potato seed specialists

- University of Florida: One agronomist in cropping systems, and one in citrus (La Jota Station)

- FAO: One in soils and irrigation at San Benito

Both agricultural research and the Agricultural Extension Service have experienced problems in the past. The Agricultural Extension Service in particular has suffered from a lack of funds and low prestige, in the same way extension services suffer in many other Latin American countries.

Founding IBTA to combine research and extension, and basing many extension supervisors or agents in the experiment stations are steps in the right direction which have undoubtedly improved the performance of both services and raised the morale of the extension agents. The director of IBTA at the time of the survey, Ing. Francisco Pereira, has come from the extension service and is personally committed to the idea of extension heiping the small farmer.

The infusion of funds into IBTA from IDB and USAID, and the implementation of the project proposed by the University of Missouri Team -- "Small Farmer Communication Improvement Project" -- should raise the efficiency of IBTA considerably.

IBTA is planning to increase the number of extension agents from 90 to about 300, and to integrate further research with extension by designating specialists as research and extension agents and by equalizing pay scales for people with similar training and experience. Furthermore, IBTA plans to involve actively the small farmer in the decision-making process, and programming through the formation of village level agricultural councils and to train local farmers as para-technicians. After training, they would be designated as local agricultural leaders and serve as the local link and representative of the extension service in their home villages.

These local agricultural leaders would be remunerated for their services, in an amount to be fixed by the local community. Thus, it is expected they would maintain their leadership position only if the community feels that they are performing a worthwhile service.

It is expected that IBTA will be further strengthened by proposed reorganization which will decentralize its organization and take more responsibility and decision-making power away from the central office in La Paz, placing it in the regional field offices.

COMMENTS:

Dr. Newton, the VITA Agricultural Specialist, had the privilege of attending several meetings of campesino representatives, Government representatives from agencies like the Road Department, the Instituto Nacional de Colonizacion, the local department's development agency (CORDECO), IBTA and foreign consultants from OAS, AID, etc., at Villa Tunari, Tropical Chapare, Department of Cochabamba. These meetings were under the direction of Ing. Agr. Emilio Salaves, Director of the "La Jota" Agriculture Experiment Station. The meetings were most impressive with a business-like atmosphere, a give and take between campesinos and officials, an obvious attempt on both sides to understand the problems of the other and the desire to reach a mutually agreeable program and plan of operation. There was an almost complete absence of grandstand play, rhetoric and demagoguery which Dr. Newton considered after some twenty years in similar meetings in Latin America, a great achievement.

So, regardless of the shortcomings of IBTA at the moment, by law, design and organization IBTA is the agent to bring AT to the small farmer and rural household on a country-wide basis.

Sector	
AGRICULTURE	[x]
SMALL SCALE INDUSTRY/ARTISANRY	[ ]
WATER & SANITATION	[ ]
ENERGY	[ ]

AT Initiative	Present	Potential
Research	[x]	[x]
TA/Demonstration	[x]	[x]
Manufacture/Construction	[ ]	[ ]
Dissemination/Training	[ ]	[x]

NAME: CENTRO DE INVESTIGACIONES DE AGRICULTURA TROPICAL (CIAT --Center for the Study of Tropical Agriculture)

OFFICE ADDRESS: 40 Ñuflo de Chávez
Santa Cruz, Bolivia

INSTITUTIONAL SUMMARY: CIAT is the parallel institution in the Department of Santa Cruz to what in the rest of Bolivia is IBTA. The reason for the separate name and separate organization is that its existence predates the formation of IBTA. CIAT has close institutional links to CORDECRUZ, the Regional Development Corporation.

CIAT states that its annual budget is $b14,000,000 including $b2,000,000 from the Central Government. The British Mission provides both personnel and funding.

The CIAT Executive Director reports to his own Board of Directors. CIAT has several agreements with IBTA and receives IBTA policy directives and technical guidance, but makes its own plans and operates independently.

There are joint IBTA/CIAT programs on wheat, corn and rice. CIAT sends copies of all its papers to IBTA as a matter of courtesy.

STAFF: CIAT personnel includes seventeen agricultural engineers working in research and seven Extension Agents, some of whom are agricultural engineers. All personnel may work in research or extension. In the past much effort has been devoted to training extension agents. In research, emphasis is on technology which will help the small farmer. Considerable work is being done on density of stand, correct planting date and correct varieties.

PROGRAMS: The main CIAT Experiment Station is at Saavedra (which could not be visited in spite of several efforts to do so). Another is at San Ignacio. CIAT also does research on private farms.

Four Extension Agencies are in the north, which are areas of small farmers, and three are in the "valles", i.e. areas of higher elevation producing corn and vegetables.

COMMENTS:

CIAT operates from an on-going analysis of the situation of Santa Cruz agriculture. The small farmer has a very limited income, because each hectare planted gives only a small income, and as long as he works only by hand, he can only work a very small area. His labor income, therefore, is very low. Larger units and mechanization would increase his income, but require capital. Animal traction might help.

Mechanized rice production in Santa Cruz produces 4 - 6 t/ha, but the small farmer gets only 1.5 - 2 t/ha.

Agriculture in Santa Cruz should be more diversified for more stability. More cattle, especially for milk production (criollo-Brown Swiss mixtures) and perennial crops as coffee, cacao and citrus are needed. Another possibility is pineapple production, which can be industrialized and the produce exported to Argentina.

CIAT has no nurseries as yet for citrus, coffee or cacao, but the Corporación Regional de Desarrollo de Santa Cruz (CORDECRUZ) has some organized.

Sector	
AGRICULTURE	[X]
SMALL SCALE INDUSTRY/ARTISANRY	[ ]
WATER & SANITATION	[ ]
ENERGY	[ ]

AT Initiative	Present	Potential
Research	[X]	[X]
TA/Demonstration	[X]	[X]
Manufacture/Construction	[ ]	[ ]
Dissemination/Training	[ ]	[X]

NAME: PATACAMAYA AGRICULTURE EXPERIMENT STATION OF IBTA

ADDRESS: Km. 104 on La Paz-Oruro Road (Highway 1)
Department of La Paz, Bolivia

CONTACTS: Ing. Agr. Hugo Mendieta, Director
Ing. Agr. Juan Rodriguez, in charge of Animal Husbandry

INSTITUTIONAL SUMMARY: The station is the principal agricultural experiment station in Bolivia by reason of its closeness to La Paz and its size--about 1,000 ha of level land in the Altiplano.

The annual budget at present is:

b$ 500,000	Operations
b$ 1, 152,000	Salaries
b$ 1,652,000	TOTAL

There is additional income from commercial farming operations, as only 2-300 ha of the 1,000 ha are devoted to experimental work.

CIDA (Canadian International Development Agency) and the Inter-American Development Bank have helped to establish the station's physical plant.

The physical plant of the station includes: a workshop, a genetics laboratory, a pasture laboratory, a wool laboratory, a drying mill, several offices, a dining hall and two staff residences. There are ample facilities to shear sheep and other animals.

Barley production at the station is 2,500-3,000 kg/ha, while campesinos produce only 700-900 kg/ha. Barley needs 5 months to mature, but only 3-4 months if it is grown for forage. There are about 500 'criollo' (native) varieties at the station, which are seeded every year to maintain the germ plasm.

Silage is produced from whole barley, which is mixed when still green with molasses. Silos are earth pits filled with pressure and then covered with plastics.

STAFF: Twelve Ing. Agr. and Egresados
One sub-professional
Thirty-three workers
One mechanic
One driver
Two Administrative Officers
Two Administrative Assistants

PROGRAMS: Andean Crops (Cultivos Andinos): potatoes, quinua, barley, kaniwa
Animals:

- Sheep, cameloids, some cattle (Brown Swiss for possible milk production). The station has 900 sheep, 350 llamas, and 100 alpacas.

- Chinchillas:
  This project was started in 1972. The animal is native in the area, but new types were brought from Europe and the United States. It was assumed the project had good prospects, but it was not found to be suitable for the local campesinos. Animals have proven too sensitive to local temperatures and feed. It is now believed that rabbits might be a more appropriate animal, but no work has been done with rabbits.

Forage Crops:

- Alfalfa (soil pH is about 6.7)
- Weeping lovegrass (Aragostis buburla)
- Aragostis curvala
- Pastos brasilero (hybrids)
- Fescue
- Orchard grass (needs irrigation)
- Russian Wild Rye

- Gladiolas -- This flower plant has given good results. One-fourth hectare produced b$60-70,000 in gross sales. It has been sold mostly in Oruro. There is no information on the size of a potential market.

Sector	
AGRICULTURE	[X]
SMALL SCALE INDUSTRY/ARTISANRY	[ ]
WATER & SANITATION	[ ]
ENERGY	[ ]

AT Initiative	Present	Potential
Research	[X]	[X]
TA/Demonstration	[ ]	[X]
Manufacture/Construction	[ ]	[ ]
Dissemination/Training	[ ]	[X]

NAME: SAN BENITO AGRICULTURE EXPERIMENT STATION OF IBTA

ADDRESS: 3/4 hour from Cochabamba on road to Santa Cruz
Bolivia

CONTACTS: Ing. Agr. Jaime Salamanca, Director
Ing. Agr. Cesar Ferogin, Pomologist

INSTITUTIONAL SUMMARY: The station has 70 ha of which 36 ha can be cultivated. It was started in 1963. Cereal work is done mostly with wheat and barley. Pomology work is with peaches, pears, apples and grapes.

In 1976 and 1977, according to an appraisal by CID, of 138 experiments in cereal programs (wheat 49%, barley 33%, oats 12%, triticale 6%) there were:

- 15 introduction of varieties
- 7 crosses of varieties
- 54 comparing of varieties
- 44 regional varieties
- 3 weed control
- 6 soil relations
- 9 quality of seed and seeding date

The quality of the experiments was rated at 17% good; 26% fair to good; 33% fair.

STAFF:		
	5 Ing. Agr.	Cereal Program
	3 Ing. Agr.	Pomology
	1 Ing Agr.	Soils - General Support Group
	3 Ing. Agr.	Extension
	2 Professionals	Plant Pathology Laboratory
	2 Professionals	Soils Laboratory
	2 Professionals	Entomology Laboratory
	2 Professionals	Anelogia (Wine) Laboratory

The station is assisted by three COTESU Pomologists, one CID Plant Pathologist (who also works at Toralapa) and one FAO Soils-Irrigation Specialist.

COMMENTS:

The station has irrigation facilities and uses furrow and trickle irrigation. The station is very well kept and has fairly adequate facilities. The soils laboratory is not very well arranged, and is missing some essential equipment. It does not seem to produce any data in spite of assistance from CID specialists.

Sector	
AGRICULTURE	[X]
SMALL SCALE INDUSTRY/ARTISANRY	[ ]
WATER & SANITATION	[ ]
ENERGY	[ ]

AT Initiative	Present	Potential
Research	[X]	[X]
TA/Demonstration	[X]	[X]
Manufacture/Construction	[ ]	[ ]
Dissemination/Training	[ ]	[ ]

NAME: TORALAPA AGRICULTURE EXPERIMENT STATION OF IBTA

ADDRESS: Km. 429 on Santa Cruz-Cochabamba Road
Bolivia

CONTACTS: Ing. Agr. Gonzalo Claude, Director
Ing. Agr. Alarcon, Potato Geneticist

INSTITUTIONAL SUMMARY: The station has about 200 hectares, of which 45 ha can be cultivated. Work is mostly on potatoes, but the station also has an animal section working on cattle and sheep. Potato work covers all aspects, especially cultivation methods, breeding, seed production, pest control and storage.

The station has a Potato Genetics Laboratory, a Laboratory for Plant Pathology and Nematode studies, two greenhouses, a mechanical shop (which includes a large drill, welding equipment, some grinders) and offices. There is a residence for the director, and dormitories for the remainder of the technical staff who commute from Cochabamba on a weekly basis. Several new residences are under construction. The station has radio communication with the IBTA office in Cochabamba.

Crop rotation in the area is as follows: potatoes, cereals for grain (barley or oats), cereal for forage, tarwi (a lupine, i.e. a legume). Also, habas (a broad bean) is grown in the area with irrigation.

In 1976 and 1977, according to an appraisal by CID, from eighty-seven experiments with potatoes, there were:

- 11 introduction of varieties
- 5 crossing of varieties
- 19 comparisons of varieties
- 10 regional comparisons of varieties
- 9 disease control
- 3 weed control
- 5 soil fertility
- 18 regional soil fertility
- 7 other cultivation methods

Thirty per cent of the experiments were rated as good, 15% fair to good, 25% fair to poor, and 30% poor.

STAFF:

- 6 Agricultural Engineers
- 1 Mechanical Engineer (for potato storage work)
- 1 Subprofessional for cattle and pasture
- 1 Administrator
- 4 Graduate students, who work on thesis problems (there are 12 more who work on potato problems for their theses at San Benito and the Faculty of the University in Cochabamba -- they are all financed by CID)
- 2 Mechanics and drivers
- 1 Tractor driver
- 15-20 Workers

The station is assisted by a Potato Agronomist and a Potato Geneticist from CID and two Potato Seed specialists from COTESU.

Sector	
AGRICULTURE	[x]
SMALL SCALE INDUSTRY/ARTISANRY	[ ]
WATER & SANITATION	[ ]
ENERGY	[ ]

AT Initiative	Present	Potential
Research	[x]	[x]
TA/Demonstration	[x]	[x]
Manufacture/Construction	[ ]	[ ]
Dissemination/Training	[ ]	[x]

NAME: LA JOTA AGRICULTURE EXPERIMENT STATION OF IBTA

ADDRESS: Highway 7, Villa Tunari-Pto. Villarroel Road
Department of Cochabamba
Tropical Chapare, Bolivia

CONTACT: Ing. Agr. Emilio Salaves, Director

INSTITUTIONAL SUMMARY: IBTA took this station in February 1976. Prior to this it was a nursery and orchard belonging to the Instituto Nacional de Colonización.

The station is at 230m altitude and covers 83 ha.

Work is going on with rubber, pejebaye palm, cacao, citrus, cafe, black pepper, cardamom, pineapple, tomatoes, cucumber, watermelon and papaya. The station also has a mango orchard, but no work with mango is done. There is also considerable production of rice and oil crops in the area. However, no work is done on them at the station, because of a lack of personnel.

The station has a number of brand new buildings, which are not completely finished. There is one building for offices, one dining room/kitchen, five staff houses, and one warehouse/laboratory building which will contain a soils laboratory and a plant pathology laboratory. The station director feels that a seed laboratory is also urgently needed.

The station has a herd of 30 water buffalos, which are well adapted for work in the area, but so far lack training.

The station plans to compare soil fertility maintenance under actual standard practice with a rotation which includes legumes. The weed problem is severe in the area as it is tropical and humid. The problem is similar to that in tropical Santa Cruz. Station staff feel, however, that proper rotation could reduce weed problem considerably.

STAFF: Assigned to this station are six agricultural engineers, one sub-professional and four graduate students of agricultural engineering working on their respective theses. The local Extension Service supervisor is stationed at La Jota. The remaining extension workers are located one each at Chipirri, Izicunta, San Francisco, Villa Tuneri and Villa Iberza--all in the Chapare area. The director of La Jota coordinates

all research and extension activities.

This station receives technical assistance in cropping systems from one University of Florida agronomist and part-time assistance from a University of Florida citrus specialist.

COMMENTS:

The Director of the station, Ing. Agr. E. Salaves, is an outstanding personality, exhibiting leadership qualities in the area with considerable influence on other local government entities and local campesino organization.

Sector	
AGRICULTURE	[X]
SMALL SCALE INDUSTRY/ARTISANRY	[ ]
WATER & SANITATION	[ ]
ENERGY	[ ]

AT Initiative	Present	Potential
Research	[ ]	[ ]
TA/Demonstration	[ ]	[ ]
Manufacture/Construction	[ ]	[ ]
Dissemination/Training	[X]	[X]

NAME: BIBLIOTECA NACIONAL AGROPECUARIA
(National Agricultural Library)

ADDRESS: MACA
La Paz, Bolivia

CONTACT: Ms. Gloria Blaccutt

INSTITUTIONAL SUMMARY: The library consists of one large 15 x 20 meter room in the Ministry of Agriculture in La Paz. The library has a standard card file. Bookshelves are on the side of the library room. There are no separate stacks. Two or three office desks are located at one side.

STAFF: The library has approximately three employees.

COMMENTS:

The library is not very impressive and it was difficult to get any information from the person interviewed. The library would benefit from one or more sets of VITA publications, especially those in Spanish.

Sector	
AGRICULTURE	[x]
SMALL SCALE INDUSTRY/ARTISANRY	[ ]
WATER & SANITATION	[x]
ENERGY	[ ]

AT Initiative	Present	Potential
Research	[x]	[x]
TA/Demonstration	[ ]	[x]
Manufacture/Construction	[x]	[x]
Dissemination/Training	[ ]	[ ]

NAME: DIRECCIÓN DEPARTAMENTAL DE RIEGO-MACA -- (Regional Irrigation Department of the Ministry of Agriculture)

CONTACTS: Ing. M. Macias, Chief
Dr. R. Leuenberger, F.A.O. - Project Manager

INSTITUTIONAL SUMMARY: This is the irrigation department of the Ministry of Agriculture. Irrigation work in the Cochabamba region is divided among the following:

- Irrigation Department of MACA with assistance from FAO and GEOBOL
- Irrigation Section, Oficina de Desarrollo de Comunidades, MACA
- Irrigation Section, CORDECO
- Micro-irrigation Department -- Prefectura de Cochabamba
- Irrigation Section, Faculty of Agriculture (research only)

STAFF: The department has three engineers in the Central Office and five in the field.

PROGRAMS: The largest project in the area is the Angostura Irrigation Project. This project became operative in 1948. It is 18 km from Cochabamba.

The following are some of the vital statistics of the scheme:

Useful reservoir capacity	86×10^6 m^3
Annual volume available at end of rainy season (75% probability)	52×10^6 m^3
Evaporation less during irrigation season 30%	16×10^6 m^3
Annual net volume for irrigation	36×10^6 m^3
Irrigation season April-November	8 months
Rainy season December -March	4 months
Net irrigable area	5,100 ha
Number of individual land owners	5,100 ha
Average size of land holdings	1.0 ha

Land owners holding less than 1 ha	64%
Land owners with holdings between 1 and 2 ha	21%
Land owners with holdings larger than 2 ha	15%
Cropping patterns:	
Alfalfa	53%
Corn	30%
Vegetables	10%
Potatoes	7%
Net irrigation water requirement of given cropping pattern (considering that ground water contributes 20% to alfalfa water requirement)	4,350 m^3/ha
Conveyance system efficiency	60%
Field application efficiency	45%
Distribution system efficiency	75%
Overall project irrigation efficiency	20%
Crop area actually fully irrigable with 36 million m^3 of net available water	1,655 ha
Irrigation intensity based on net irrigable area of 5,100 ha	32%
Land affected by poor drainage and salinity-alkalinity	2,700 ha

Figures given by various people about potential and actual size of the project vary somewhat. The above came from the FAO advisor. The project is now being rehabilitated by improving the conveyance and distribution system and by the installation of a pilot 100 ha sub-surface drainage scheme to reclaim the 2,700 ha where production has been severely affected, including 1,000 ha ruined by salinity (total with salt problems 2,500 ha).

As can be seen from the above figures, this is an important project for the agriculture of Cochabamba as it includes many small farmers (over 3,200 with holdings of less than 1 ha and about 1,100 with holdings between 1 and 2 ha). Even those with holdings over 2 ha are presumably all rather small.

Other projects of larger size are:

- Project Coari -- under construction
- Project Punata -- Valle Alto -- feasibility study only

There are also several small projects with reservoirs of 1 - 1½ million m^3.

There are a number of irrigation schemes based on tube wells. The original ground water investigation was made by GEOBOL, in 1973, helped by a UNDP project. Generally these wells deliver 15- 20 l/sec, which is sufficient to develop a thirty to forty ha scheme. Plans call for thirty such schemes; sixteen wells have pumps imported from Pakistan. Since 1977 the FAO project has concentrated on two to three schemes and, lately, one as a model scheme due to lack of funds and manpower. In July 1979, a total of eighteen schemes were in operation producing water for 600 ha and benefiting 1,400 campesino families (0.4 ha/family average).

COMMENTS:

As indicated, responsibility for irrigation is in several agencies. The families benefited even in the larger schemes are all very small farmers.

Potentially this is an area for AT use--especially in the pump schemes. These probably could be much improved by micro-levelling of plots and by the use of small pumps to bring water to areas not easily reached by gravity flow.

Sector	
AGRICULTURE	[X]
SMALL SCALE INDUSTRY/ARTISANRY	[ ]
WATER & SANITATION	[X]
ENERGY	[ ]

AT Initiative	Present	Potential
Research	[ ]	[ ]
TA/Demonstration	[X]	[X]
Manufacture/Construction	[X]	[X]
Dissemination/Training	[ ]	[X]

NAME: SERVICIO NACIONAL DE DESARROLLO DE COMUNIDADES (SNDC -- National Community Development Service NCDS)

OFFICE ADDRESS: Ministerio de Asuntos Campesinos y Agropecuarios
Av. Camaacho
La Paz, Bolivia

INSTITUTIONAL SUMMARY: This division of MACA tries to act as a coordinating agency to bring social services and infrastructure to the colonies and communities.

SNDC is involved in various integrated rural development projects such as construction of schools, hospitals, bridges, roads, health posts, , and irrigation projects. Water supply systems are usually part of another project like an irrigation system, or they are built in conjunction with a hospital or health posts.

Of all the government agencies surveyed, SNDC seemed to place the most emphasis on community organization and training (capacitación). They do not want just to build a project for a community. They would train community members in the necessary skills so they could build it themselves. They also claim to collaborate with other government agencies. SNDC does the local ground work and community organizing for projects that other agencies execute.

The organization is somewhat centralized with a pyramidal structure. The Southern Regional Office is in Sucre, and administers to and provides technical support to four other local offices in Chuquisaca, Potosí, and Tarija. The Sucre office has numerous engineers and technical personnel who do the design work for projects in the three departments. The local offices are primarily community organizers, promoters and construction supervisors.

NCDS has a policy of "autoayuda" with its community projects. Communities must cover half the cost of a project, part of which is local materials and construction labor, and the remainder cash. This requirement discourages many communities from participation in SNDC programs.

STAFF: A table of the organization for the country-wide organization is shown in Figure VII- 2.

Figure VII-2

Table of Organization
National Community Development Service

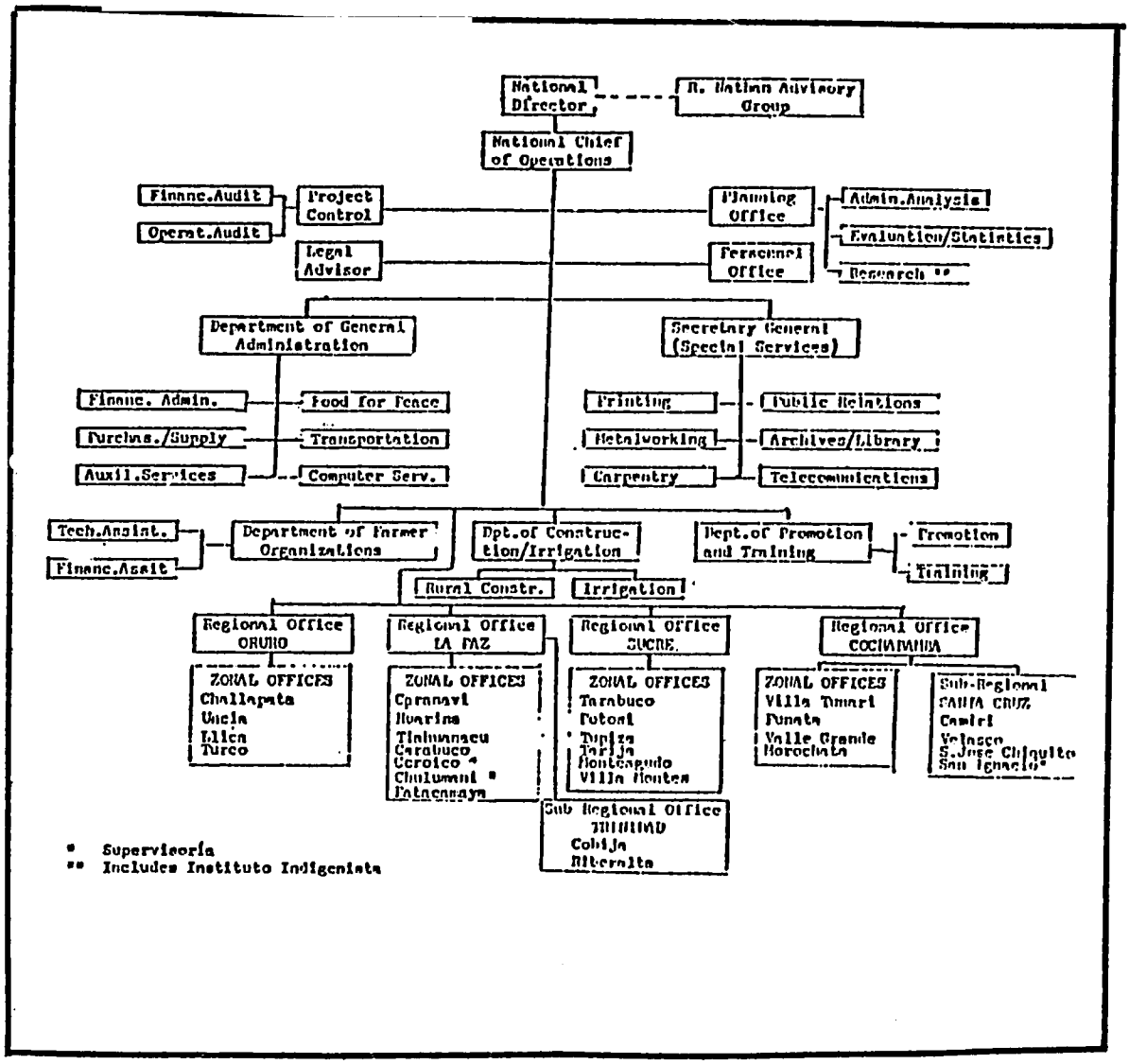

Source: Village Development Loan AID/La Paz Project Paper

With the Irrigation Division, which handles water systems, at the office of Sucre, are six engineers, two surveyors and three construction supervisors. At Tarija, there is one construction engineer, four construction and irrigation technicians, three community organizers and thirteen promoters. The Cochabamba office, which also covers Santa Cruz has some seventy employees.

COMMENTS:

SNDC is in a position to implement projects utilizing appropriate technologies. They have the capacity to train local community members in the appropriate skills necessary to construct and maintain simple systems, such as hand-dug wells with locally made pumps, or in basic techniques like waste composting and tree planting. Some system of revolving credit would probably be necessary for communities to be able to afford the 50% cost requirement and to increase participation, however. Specific projects of the SNDC reported in the social feasibility background study (cf. AMARU IV 1979) and related studies (cf. Hatch 1978) suggest that community participation is not at present well organized by SNDC.

Sector	
AGRICULTURE	[x]
SMALL SCALE INDUSTRY/ARTISANRY	[ ]
WATER & SANITATION	[x]
ENERGY	[ ]

AT Initiative	Present	Potential
Research	[x]	[x]
TA/Demonstration	[x]	[x]
Manufacture/Construction	[ ]	[ ]
Dissemination/Training	[ ]	[x]

NAME: PROYECTO CHAPARE-OAS/INSTITUTO NACIONAL DE COLONIZACIÓN (INC -- National Colonization Institute)

ADDRESS: Avenida Papa Paulo esq. German Urquidi
Cochabamba, Bolivia

CONTACTS: Ing. Miguel Petit-Ayala, Co-Director, Mission Chief--OAS
Ing. Agr. Rene Lozano, Co-Director, INC

INSTITUTIONAL SUMMARY: This is a project by the Instituto Nacional de Colonización to develop the Chapare Region in the Department of Cochabamba, a region of 24,500 sq km in the tropical areas of the Department of Cochabamba. This area alone is about one half the size of Costa Rica, or larger than El Salvador. It starts about 160 km northeast of Cochabamba, where it forms roughly a triangle north of Villa Tunari. The river Chapare traverses the area. The elevation is 2-500 m. East of Villa Tunari organized colonication has taken place, while west of it spontaneous colonization started. Organized colonization has received assistance from BID, IICA and INC. In spite of this, so far only 40,000 people live in the area and about 35,000 ha are cultivated. The main cash crop is coca.

Because of this, the area demands special interest and some 60 organizations are involved in various phases of the development. The OAS-INC project is trying to establish some guidelines and coordinate efforts and to obtain financing to develop the area. The project has outlined programs in public health, road systems, electrification, agro-industries, technology transfer in agriculture, agricultural credit and regional markets for agricultural products.

Contaminated drinking water reportedly is the major health hazard and most of the population suffers from parasitic problems.

The agricultural potential is good as the area is tropical with sufficient precipitation. Other crops of potential besides coca are rubber, papaya, pejebaya palm, cacao, citrus, mango, black pepper, cardamom, pineapple, tomatoes, cucumber, watermelon and rice. Campesinos have great difficulties in controlling weeds in rice.

Of the 35,000 ha actually in crops in 1976, 34% were in rice, 28% in coca, 23% plantains, 11% citrus and 4% in other crops. This produced the following percentages of Bolivia's total agricultural production: 39% of plantains, 32% of citrus, 19.5%

of rice, and 9% of lumber. While the total territory is 24,500 sq km; 11,540 sq km, are considered of potential agricultural value.

The project hopes for an initial development loan of US$15-20,000,000 from international sources.

Within the Chapare project area a school-training farm for young people, both boys and girls, is suggested as a sub-project. The school would have 300 ha of land, and include two dormitories for students, a dining hall, kitchen, five classrooms and staff housing. Furthermore, it would have a mechanics workshop and a carpentry workshop. It would have barns and sheds for cows, chickens and pigs. It is suggested that initially three hundred heifers, fifty cows, twelve pigs, five hundred chickens and three horses be purchased. The purchase of one tractor, implements and welding equipment is inlcuded, as are installations for bee-keeping. At the start there would be a staff of seven persons.

The total project is estimated to cost b$5.5 million. It is planned to locate it at Mariposas in the Chapare region, Province of Carrasco, Department of Cochabamba. The property is known as "Prelatura de Aiquile".

The purpose of this school would be to train young people in agriculture in the most practical way. It is envisioned that the training program would have substantial content of AT.

COMMENTS:

This is an area with a huge development potential in tropical agriculture by small farmers. It also has severe health problems due to unsanitary conditions, especially lack of safe drinking water. It is a potential area for all sorts of AT. The project also plans to establish a sub-professional agricultural training center for young people in the Chapare area to help the development of this zone. This training program would be an efficient way to introduce and disseminate knowledge about AT in this part of Bolivia.

Sector	
AGRICULTURE	[X]
SMALL SCALE INDUSTRY/ARTISANRY	[ ]
WATER & SANITATION	[X]
ENERGY	[ ]

AT Initiative	Present	Potential
Research	[ ]	[ ]
TA/Demonstration	[X]	[X]
Manufacture/Construction	[X]	[X]
Dissemination/Training	[ ]	[X]

NAME: PROYECTO DE DESARROLLO RURAL INTEGRADO INGAVI (INGAVI -- Ingavi Integrated Rural Development Project)

MAILING ADDRESS: Casilla 8561
La Paz, Bolivia

OFFICE ADDRESS: Avenida Santa Cruz, Edificio Esperanza, 6° piso
La Paz, Bolivia

PHONES: 57929, 40353

CONTACT: Ing. Tito Vargas, Water and Sanitation Project Director

INSTITUTIONAL SUMMARY: The Ingavi project is a semi-autonomous agency for the Ministry of Agriculture and Campesino Affairs (MACA) financed by a US$9.5 million World Bank loan. This project is described in an appraisal issues by the World Bank (1976-Report no. 936-BO). The project is located in an 800 km Altiplano area at 4,000 m near La Paz in Aymara-speaking communities.

STAFF AND ORGANIZATION: See Figure VII-3 for a Table of Organization.

FIGURE VII-3

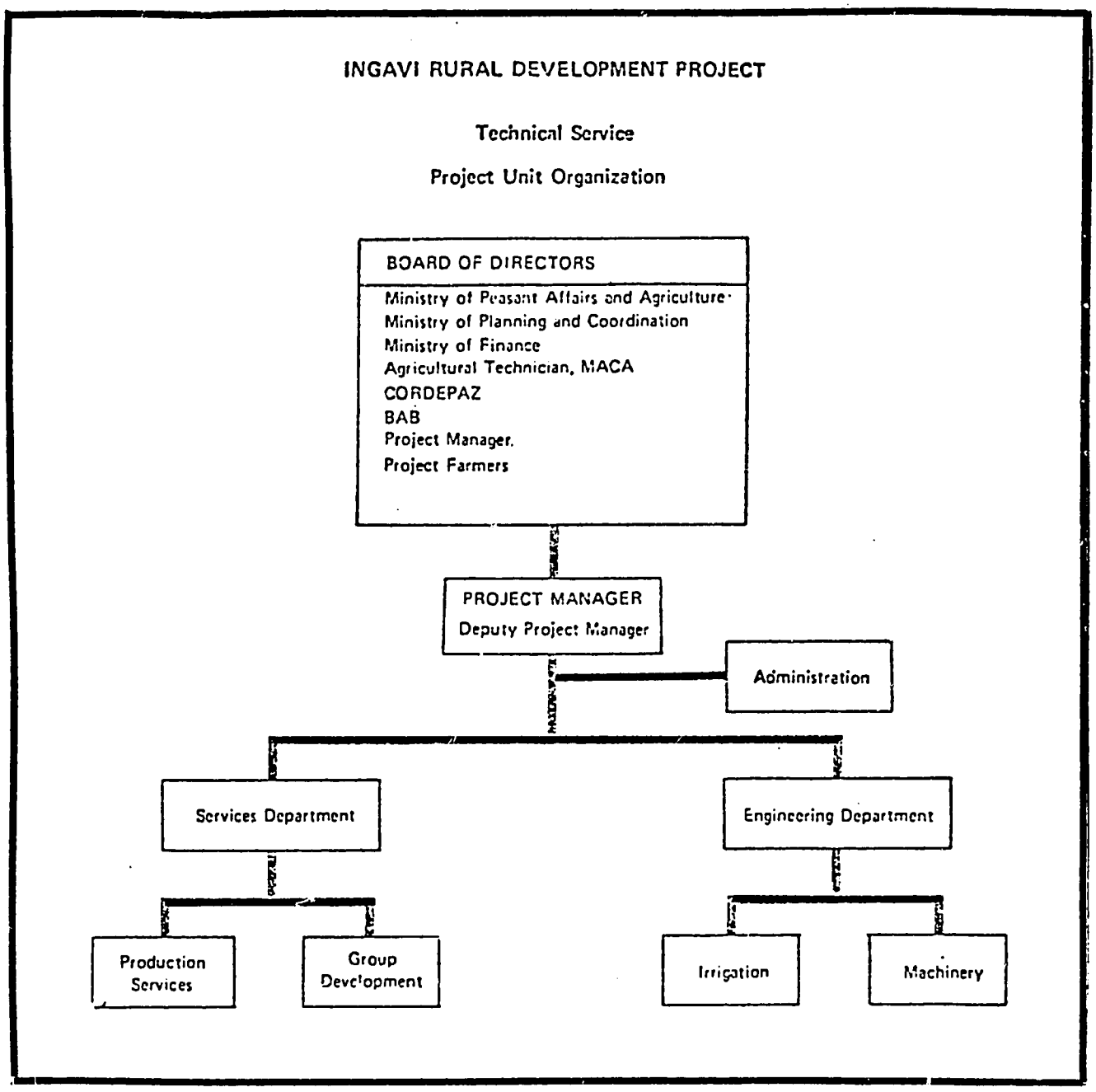

SOURCE: World Bank, Appraisal of Ingavi Rural Development Project, Bolivia. Report 936-BO Annex 4, Table I, 1976.

AT INITIATIVE--Water and Sanitation: The Ministry of Social Security and Public Health component of the project will provide shallow wells equipped with hand pumps to service about 8,000 families in the project area and will provide pit privies to about 3,000 families. Three-quarters of these wells require only manual excavation to table water; the remainder require drilling. The cost per well is limited to US$360.

The water supply and sanitation component project is headed by Ing. Tito Vargas, a civil engineer who has worked with Sanamiento Ambiental. He has a total staff of twenty-three including a draftsman, twelve masons and laborers and six sanitation technicians who are Aymara speakers. They have a small shop and construction yard with a cement mixer where they fabricate concrete beams and slabs for the wells and latrines. The project is in its third year but they have actually been installing wells and latrines for about a year. They have installed about 550 wells and 300 latrines.

The project is situated in a Northern Altiplano region of numerous lakes, so the water table is close to the surface-usually within three or four meters. The soil is very rocky, so simple drilling techniques are not feasible. Hand dug wells are the simplest access to water.

The project has developed a simple hand pump and well casing system that is about the most appropriate technology for water supply in Bolivia. Concrete parts for the well casing system and concrete slabs for the latrines are made up in the projects shop. The pump is based on a well-tested World Bank design. The parts are all manufactured in La Paz for readily available materials. The steel pipe and bar stock are imported as are the raw materials for the locally manufactured plastic pipe. (See Chapter Five, AT Inventory Ingavi pump, above.)

Ing. Vargas said in October that production of the pump had fallen behind demand. The manufacturer was still at a pilot level. A small factory needs to be set up to mass produce the pump for use in other departments as well as meet the local demand. The project has six promoters who are Aymara speakers who find participants for the program. To be eligible for a water system the campesino must agree to build a latrine. The slab for the latrine is sold at a subsidized rate of b$25 vs cost b$65. The cost of the well and pump is also subsidized. The campesinos pays b$500 for the well out of a cost to the project of about b$2,250.

COMMENTS:

The technical aspects of the water and sanitation portion of Project Ingavi are well conceived. However the project as a whole has a bad reputation politically. There are ill feelings amongst the community about the high salaried technicians who come from La Paz every day to work.

Very few of the project's employees are local people or live locally with the people they are there to help. There is little or no local or community participation in planning or decision-making. It seems to be another case of development for the poor rather than "with" the poor. Many of the promoters have left the project with ill feelings. When Mr. Kroschel was driven around to see well installations of the project, the drivers demonstrated a certain lack of respect for the campesinos, forcing pedestrians off the road when there was adequate room to drive around them and driving right across agricultural fields to show him a well pump rather than taking the longer way around the edge of the field.

As this project clearly illustrates, appropriate technologies address only a part of the problem of development.

AT INITIATIVE: Agriculture -- "Production inputs" including deep well irrigation systems planned by GEOBOL and IGM, construction of distribution and drainage systems and improvement of existing drainage systems, livestock investments, tractors, storage facilities and roads are planned. Local neighborhood "irrigation groups" will be organized to use the deep well, small scale irrigation systems, in part among the forty some neighborhood groups (of thirty to seventy-five families each) which have been identified as formally or informally organized in the project area. Major project goals are to increase production of quinua (a high altitude native Andean cultigen), barley, vegetables and other crops by increased use of manure from the dairy herds. The strategy for increasing potato production involves credits and incentives to have farmers use commercially available improved seed potatoes. Dairy herd stock will be improved by a breeding service with Friesian or Brown Swiss bulls.

COMMENTS:

Ingavi and the similarly structured Omasuyos-Los Andes Rural Development Project (cf. World Bank 1979 Report No. 2475-BO), and Ulla Ulla (see Institutional report on Ulla Ulla) can be characterized as demonstration projects. Both Ingavi and Omasuyos projects apply and adapt proven technologies to particular local conditions, and a particular population. Total project costs (Ingavi: a projected US$12.6 million to serve 8,000 families in the project area or US$1,600 per family) and risk of failure are high. As all three World Bank projects work with Aymara speakers in the Northern Altiplano near La Paz, the value of the projects in demonstrating technologies may be confined to diffusion to this language community and region.

While the integrated rural development approach is commendable, the scale is an experiment in development economics and is not, at present, generalizable for Bolivia.

MINISTERIO DE COMERCIO Y

INDUSTRIAS Y TOURISMO (MCI - Ministry of Commerce, Industry and Tourism)

DEPENDENCIES SURVEYED:

INBOPIA - INSTITUTO BOLIVIANO DE LA PEQUENA INDUSTRIA Y ARTESANIA

INFOL—INSTITUTO NACIONAL DE FOMENTO LANERO

ULLA ULLA DEVELOPMENT PROJECT

DIRECCIÓN GENERAL DE NORMAS Y TECNOLOGIA (DGNT)

Sector	
AGRICULTURE	[ ]
SMALL SCALE INDUSTRY/ARTISANRY	[X]
WATER & SANITATION	[ ]
ENERGY	[ ]

AT Initiative	Present	Potential
Research	[ ]	[ ]
TA/Demonstration	[ ]	[ ]
Manufacture/Construction	[ ]	[X]
Dissemination/Training	[ ]	[X]

NAME: INSTITUTO BOLIVIANO DE PEQUENA INDUSTRIA Y ARTESANIA (INBOPIA — Bolivian Institute of Small Industry and Artisanry)

MAILING ADDRESS: Casilla 6750
La Paz, Bolivia

OFFICE ADDRESS: Ave. Camacho esq. Calle Bueno
La Paz, Bolivia

PHONE: 360045

CONTACT: Lic. Antonio Aldunate Gillen, Executive Director
Ing. Ernesto Garcia, Chief of Engineering Division

INSTITUTIONAL SUMMARY: Following a long list of supreme decrees and short-lived predecesor organizations, INBOPIA was created by a supreme decree in 1974 and began to function in June of 1975. INBOPIA was established as an autonomous public institution under the general supervision of the Ministry of Industry, Commerce and Tourism.

As the chief arm of The Ministry of Industry, Commerce and Tourism (MICT) charged with carrying out the development of the Small Scale Industry (SSI) and artisan sector, the most unusual feature is that it is structured heavily as a commercial entity. Other INBOPIA functions, unrelated to development activities, are to act as the official Registry for Small Scale Industries and artisans, and such others as to validate certificates of origin for exporters.

STAFF AND ORGANIZATION: Presently, INBOPIA employs an internal staff of twenty-nine persons, fourteen of whom are professionals or technical assistants while three are social promotors. The major thrust of its activities keeps its professional staff office-bound, constraining INBOPIA's effectiveness in the field. During its short existence, its top administration has changed hands as often as four times a year.

Tied to the office, its technical staff has been largely restricted to analysis of the Small Scale Industry and artisanry sector, and, more recently, to planning and pre-feasibility studies in preparation for the Ulla Ulla project (See Ulla Ulla Development Project report, below).

Under the World Bank supported Ulla Ulla Project the INBOPIA staff will be strengthened with the hiring of one full-time marketing specialist, two artisan organization promotors, one part-time textile engineer, and one designer. In addition, one or two international experts will be contracted over a three year period to assist with the reorganization and training of INBOPIA's management staff, project personnel and marketing program.

Also under the Ulla Ulla Project INBOPIA's outreach capabilities will be reinforced by an agreement with FOMO (National Services for Labor Training—see report under Ministry of Labor, below) to supply training personnel for the education and vocational training component of the project.

INBOPIA presently has the short-term services of two Inter-american Development Bank experts on wool products-one a specialist in commercialization, the other a textile designer.

AT INITIATIVE: There was no indication either from interviews with INBOPIA management and technical staff or in surveying INBOPIA projects and activities that they know any basic concept of the implementation of Appropriate Technology. There are many isolated technologies applied in production in SSI and artisanry which could be considered as appropriate hardware, however in the case of INBOPIA it can be said that much of the appropriate technologies in use are being inappropriately applied, thus these technologies are rendered inappropriate.

INBOPIA is not totally unaware of its shortcoming regarding technical assistance and technology and has in at least one case demonstrated an R&D effort to modify a spinning wheel that would fill the gap between the existing hand spinning technology and the industrial spinning technology applied by the INFOL (Instituto Nacional de Fomento Lanero) Mill. Unfortunately, however, this is also an example of how outside forces may control the choice of technology. Under the Ulla Ulla project the choice has been predetermined that the industrialized yarns of INFOL, rather than appropriate technology, will be applied. In turn, this single choice of a specific technology then imposes a chain of constraints on the choice of technologies which INBOPIA now may apply at the project level.

SPECIAL PROGRAMS: The project which presently supplies INBOPIA's commercial outlets is "Manos de Bolivia", a scattering of nine weakly structured "cooperatives" producing alpaca wool products around Lake Titicaca. A visit to one of the coops found it had little resemblance to any producers' organization: the cooperative visited featured an INBOPIA commercial agent whose major function was to distribute work orders and to gather the items produced. INBOPIA will receive its first major test and experience in management and implementation of a broad scope field operation under the World Bank supported Ulla Ulla Development Project.

INFOL, as chief administrator of this project, has entered into agreement with INBOPIA to administer and implement the handicraft development component aimed at artisans and industries utilizing alpaca, llama and sheep wool.

Of the US$23 million Ulla Ulla Project budget, the handicraft component will receive US$43.1 million including a US$2. million artisan credit program administered by the state bank, a US$875,000 technical assistance and marketing program implemented by INBOPIA and a US$125,000 education and vocational training program implemented by FOMO.

It is projected that over a five year period more than 3,000 artisan families will benefit. Individual artisans may receive loans of up to US$3,000 and artisan producer organizations may receive loans of up to US$100,000 at 12% interest, six year loan maturity, and up to a one year grace period. Loans are restricted to the purchase of raw materials (basically industrialized yarn produced by INFOL under another component of the Ulla Ulla Project). The purchase of knitting and weaving machinery (presumably compatible for utilizing the INFOL yarn) and for establishing small production shops for production of wool handicrafts. Collateral for securing loans will be the materials and equipment purchased and the products produced.

Priority will be given to the rural regions of La Paz and Cochabamba Departments, however urban artisans and other departments are not excluded. While a former World Bank study recommended that INBOPIA emphasize its direct involvement as a commercial entity, the Ulla Ulla project provides for strengthening its marketing functions with the assistance of an international expert in handicraft marketing and a US$100,000 fund to enable INBOPIA to purchase and commercialize production through its store in La Paz and for export.

In addition, INBOPIA has plans to establish an elaborate artisans' market center in La Paz. Specifics on these plans were not available due to the interruption in discussions with INBOPIA after November 1, 1979 but this does indicate INBOPIA's strong view of its role more as a merchant of handicrafts than as an institution which might promote and develop entrepreneurship among the artisans and producer groups themselves. This attitude is also very strongly evident in reviewing existing INBOPIA projects where the marketing function has been separated from production and from the responsibility and control of the producers.

COMMENTS:

Rural Industry expert Wayne Frost, after evaluating the functional structure of INBOPIA's organization in relation with its activities and projects, felt that the marketing component functions of INBOPIA as presently structured and pursued were in direct conflict with attainment of INBOPIA's publicly stated goals of promotion and assistance for the social, technical and economic development of the artisans and their industries.

In examining what INBOPIA function and how the organization and its individual employees rationalize their self-perpetuation, Frost found the criteria for self evaluation was performance and pursuit of success as a merchant of handicrafts, rather than attainment of INBOPIA's stated public goals.

This is not an uncommon pitfall among organizations dealing with handicraft development elsewhere. One advantage that INBOPIA has in dealing with this problem is its youth as an organization. Its structure and functions have not yet been so strongly institutionalized that change would be impossible.

Whether INBOPIA is to develop into a merchandizing or development agency will depend heavily on the directions taken over the first year of the implementation of the Ulla Ulla Project.

Sector	
AGRICULTURE	[ ]
SMALL SCALE INDUSTRY/ARTISANRY	[X]
WATER & SANITATION	[ ]
ENERGY	[ ]

AT Initiative	Present	Potential
Research	[ ]	[ ]
T/A Demonstration	[ ]	[ ]
Manufacture/Construction	[X]	[ ]
Dissemination/Training	[ ]	[ ]

NAME: INSTITUTO NACIONAL DE FOMENTO LANERO (INFOL - National Institute for the Development of Wool)

MAILING ADDRESS: Casilla 732
La Paz, Bolivia

OFFICE ADDRESS: Avenida 16 de Julio (El Prado) No. 1490 - Mezzanine
La Paz, Bolivia

CONTACT: Dr. Armando Cardozo, General Manager

INSTITUTIONAL SUMMARY: INFOL is an autonomous public institution under the general direction of the Ministry of Industry, Commerce and Tourism and the Ministry of Campesino Affairs and Agriculture. It was created in 1977 by the reorganization of the Bolivian Committee for Promotion of Wool (COMBOFLA) which had been founded in 1962 with USAID assistance.

Its main objectives are to support the wool textile industry and to promote integrated rural development in areas where alpaca, llama and vicuña wool is produced.

STAFF AND ORGANIZATION: INFOL employs 180 persons; 83 at its yarn factory, 45 professionals, 23 administrators, and 29 support personnel.

Dr. Cardozo, INFOL General Manager, is an agronomist specialized in animal husbandry and is an expert on cameloids of the Altiplano, i.e. llamas, alpacas, vicuñas. He has published a bibiography on cameloids.

SPECIAL PROGRAMS: Wool Collection: one of the former COMBOFLA functions that INFOL has incorporated is the collection of llama, alpaca and sheep wool. INFOL has three rural agencies and four major and thirteen secondary collection stations in the wool production regions for the collection, storage and shipment of wool. INFOL collects annually approximately 60 m tons or 60% of the llama fiber production, 40 m tons or a little under 30% of the alpaca fiber production and about 190 m tons of sheep wool. Most of the llama and sheep wool is sorted, graded and resold, while most of the alpaca wool that INFOL collects is consumed by its yarn plant at Pulacayo.

Wool processing: INFOL has a gathering station at the El Alto near La Paz where the fibers are sorted and graded, and an alpaca yarn plant at Pulacayo in Potosi Department. This plant is poorly situated in relation to access and transportation for raw materials and markets. Its obsolete equipment and plant facilities produces approximately 26 m tons annually of alpaca yarn. The yarn is then sold in La Paz, Cochabamba and other centers, principally to handicraft producers and industries.

This plant is scheduled to be abandoned within the near future as soon as the new INFOL plant at Viacais near La Paz becomes operational. (See Ulla Ulla Development Project report, below)

The Ulla Ulla Development Project: The major program with which INFOL is involved is the US$23 million Ulla Ulla Development Project which INFOL heads as Chief Administrating Institution. (See Ulla Ulla Development Project report, below)

AT INITIATIVE: Outside of the Ulla Ulla project, INFOL was not found to be taking any AT initiative. In the past and under the predecessor COMBOFLA, projects have included those to improve forage, to dissiminate new shearing technologies, etc., but with little enthusiasm or success. For further information on INFOL's AT initiative see Comments and Ulla Ulla Development Project below.

COMMENTS:

INFOL is not directly involved with rural industry other than promotion of its yarn. From the point of view of being yarn salesmen, INFOL has done an excellent job in promoting the use of industrialized yarn in the rural regions. However, from a development standpoint, INFOL has failed to take responsibility for the introduction of a new technology considered by some as inappropriate. Due to the high price of the INFOL yarn relative to the price of yarn spun by traditional technology, and also due to the fact that traditional hand knitting technology would result in a higher priced product, it was necessary for INFOL to introduce a new and more productive technology if it expected to succeed in penetrating the rural market with its yarns. The technology chosen was the portable table top knitting machine. Under the Ulla Ulla Project hundreds more of these knitting machines will be introduced. INFOL's technical expertise should be put to work on developing technologies which will maximize benefits to the rural artisans instead of maximizing the sales of yarn.

FOTRAMA, which is in a privileged position for access to raw wool, claims that by the time their buyers and intermediaries get to the field there is very little to pick from and that due to the instability and shortage of raw wool they are considering shifting the emphasis of their production to imported sheep wool.

FOTRAMA is already importing wool from Argentina to develop new lines of production and is studying the supply for wool from Chile. FOTRAMA claims that while INFOL is buying the supply lines to Cochabamba Valley, they are virtually blocked by the harrassment of truck drivers at inspection stations. Moving down the ladder the complaints on access to wool increase. One owner admitted he had no problem as he purchased from Peruvian contrabanders reselling Bolivian wool. His view was that this is just the high price of staying in business and there would not be much good in trying to change the situation.

Sector	
AGRICULTURE	[X]
SMALL SCALE INDUSTRY/ARTISANRY	[X]
WATER & SANITATION	[X]
ENERGY	[X]

AT Initiative	Present	Potential
Research	[ ]	[ ]
TA/Demonstration	[X]	[X]
Manufacture/Construction	[X]	[X]
Dissemination/Training	[ ]	[ ]

NAME: ULLA ULLA DEVELOPMENT PROJECT

MAILING ADDRESS: a/c Instituto Nacional de Fomento Laneiro
Casilla 732
La Paz, Bolivia

OFFICE ADDRESS: Avenida 16 de Julio (El Prado) No 1490 - Mezzanine
La Paz, Bolivia

CONTACT: Dr. Armando Cardozo, Project Manager

INSTITUTIONAL SUMMARY: The Ulla Ulla Project is a continuation of the Integrated Rural Development Program initiated with the Ingavi Project with World Bank support. The World Bank first initiated the Ulla Ulla Project in 1966-67; however, actual field work in the Ulla Ulla region did not begin until about July, 1978.

INFOL is administering the project. INFOL's Agriculture and Social Infrastructure Division (IAS) is directly responsible for project execution. The Project budget is US$23 million of which US$18 million is financed with World Bank loans.

STAFF AND ORGANIZATION: See Project Staff Table, World Bank Report No. 1708a-BO, page 199.

SPECIAL PROGRAMS: The Ulla Ulla Project has eight major project components, each housing a number of sub projects and each involving agreements between INFOL and participating institutions which may administer a given project component or provide services or technical support. Among the projects major components are:

Wool Collection, Storage and Processing: When it was formed, INFOL incorporated the former COMBOFLA functions and facilities into its expanded domain of action. All existing facilities are presently either obsolete or inadequate. The Ulla Ulla Project will replace the obsolete yarn plant at Pulacayo with a new yarn plant at Viacais near La Paz. New collection and storage facilities will be placed in the project area and other major llama, alpaca and sheep wool producing regions. In all, five new collection centers will be built as well as a new warehouse at El Alto. Unlike the old plant at Pulacayo, which processed only alpaca fibers, the new plant will be adequately equipped to process sheep wool yarns properly. An additional sub-project will provide an R&D

effort to either purchase or develop locally a llama fiber dehairing technology permitting the industrialization of this fiber.

Handicrafts: This component is principally administered by INBOPIA with agreements with the State Bank (BE) to oversee the components loan program and with FOMO to provide implementation of the education and vocational training sub-project. The project will provide for strengthening of the INBOPIA staff; it will provide outside assistance to assist with management and organization and with marketing, design and textile engineering.

The handicrafts to be developed are the weaving and machine knitting artisans, and producers' groups utilizing the industrialized yarns to be produced under the wool collection, storage and processing component by the INFOL yarn plant described above (See INBOPIA institution report.)

Road Construction and Improvements: This project component is implemented under the National Roads Service (SNC) and will construct new roads and improve existing ones in the project area.

Women's Participation Project: This component is administered under the Agriculture and Social Infrastructure Division of INFOL. It will be implemented by the Consortium of Interamerican Women (CIM), which is an organization under the sponsorship of the Organization of American States (OAS). Although it was originally planned that this component would be implemented within the project area, the CIM pre-feasibility studies indicated a more appropriate region that would better enhance Ulla Ulla Project goals. While this is but one of the smaller components, it has many AT features and concentrates its major technical and social support activities at the site of implementation. The project will have four resident experts in the fields of Household and Technology, Cottage Industry, Health and Preventive Medicine and Nutrition, and Social Promotion and Extension Training.

Education: Included within this component is the construction of twenty-seven school house/teacher residences utilizing solar energy for space heating, hot water and other energy needs. The schools will also test and demonstrate AT building concepts and construction design and materials and water and sanitation facilities. So far one demonstration school house has been constructed in the project area. Teacher training programs, bilingual programs and textbooks among other items will be implemented.

Water and Sanitation: This component will introduce the Ingavi handpump into the Ulla Ulla region. (See Ingavi institutional report). The component will also integrate water and sanitation initiatives with the other project components.

Health: This component will be administered under the Ministry of Health (MPSSP) which will also supervise the water and sanitation component.

Agriculture and Livestock Development: This component is the largest of the project and encompasses a broad research and extension program in agriculture and llama, alpaca and vicuña herd development.

AT Initiative: Included among the AT initiatives of the project are the technical assistance agreement with the University of San Andres' IDIF on solar energy, the CIM participation in household and cottage industry technology, introduction of the Ingavi project handpump and many others.

COMMENTS:

Rural Industry and Handicrafts: There could be little argument that the handicraft component of this project has been contrived to create a market in support of the wool processing industry to be established under the Ulla Ulla project. While this may be a sound project design strategy if the major project concern is producing and selling wool yarn, it may or may not be appropriate for the best interests and development of over 3,000 artisan families designated as the principal project consumers.

Certainly if the tables were turned and these 3,000 rural artisan families became the principal beneficiaries of a US$23 million rural industry development project it would be doubtful that a high technology yarn plant would be proposed as a project component or that all families would be involved in wool industries.

In the case of the Ulla Ulla Project, the predetermination of one technology (industrialized yarn) in turn dictates and constrains the choice of technologies available to the producers. It also places heavy constraints and responsibilities on the implementation institution INROPIA in the pursuit of its institutional mandate to promote and develop SSI and handicrafts placing the artisans as the principal beneficiaries.

Assuming that the industrialized yarn can maximize artisan and community benefits it would appear that much research and development as well as production and marketing organizational alternatives are still missing. Hopefully these tasks and gaps will be accounted for early in the implementation stages. If they are, then it may be possible to reverse the role of the artisans from being project consumers to becoming project beneficiaries. The fact that they may consume a project product can then be justified.

Agriculture: The Ulla Ulla Project covers 150,000 sq km and involves 3,500 families. The project area is at 4,200-4,400 m altitude, with an average temperature of 8-9°C. There are 200 days per year with frost, which makes any crop production very difficult. However, barley and oats experiments appear promising. So far only 20 ha of pasture have been seeded.

It is considered possible to develop the following crops for silage as animal feed: clovers, rye grass, alfalfa, orchard grass and fescue.

These pasture crops (silage) have been used with success in other areas which have the same ecological conditions as the Ulla Ulla Project. Local experience with these crops so far is limited. However, experiments are under way at the IBTA Agriculture Experiment Stations at Patacamayo and Belen. Similar experiments are also underway in the Altiplano in Peru. There are six agricultural engineers who work as extension workers in the project area and who also live there.

The possibility of obtaining thermal heat in the project area is being investigated. This could be used to heat water, which could then be mixed with cold water for fish production. The project area has a number of depressions which could be developed for fish culture. Population in the project area lives 50% in nuclear settlements and 50% isolated.

Sector	
AGRICULTURE	[ ]
SMALL SCALE INDUSTRY/ARTISANRY	[x]
WATER & SANITATION	[ ]
ENERGY	[ ]

AT Initiative	Present	Potential
Research	[ ]	[ ]
TA/Demonstration	[ ]	[ ]
Manufacture/Construction	[ ]	[ ]
Dissemination/Training	[ ]	[x]

NAME: DIRECCION GENERAL DE NORMAS Y TECNOLOGIA (DGNT -- General Directorate of Technology and Standards)

MAILING ADDRESS: Casilla 4430,
La Paz, Bolivia

PHONES: 372047, 377309

CONTACT: Carlos Garvizu

INSTITUTIONAL SUMMARY: DGNT is largely subsidized by AID/Washington and is linked institutionally with the National Technical Information Service (NTIS) of the United States Department of Commerce. The NTIS is an agency established to transmit and transfer documents published by various U.S. Government agencies. The DNGT has created a repository with catalogues for direct mail order to the United States. The US agency, NTIS, considers the DGNT as part of a network of information exchange in Latin America. While the success of the project supported by AID is to be measured, the NTIS considers the DGNT to be too isolated, understaffed, and under funded. However, DGNT may be an important resource if it is available to accumulate the documents and equipment, including micro-film and micro-fiche, which it is supposed to do.

MINISTERIO DE ENERGIA E HIDROCARBUROS (MEH -- MINISTRY OF ENERGY AND HYDROCARBONS)

DEPENDENCIES SURVEYED:

DINE -- DIRECCIÓN NACIONAL DE ELECTRICIDAD

INER -- INSTITUTO NACIONAL DE ELECTRICIDAD RURAL

ENDE -- EMPRESA NACIONAL DE ELECTRICIDAD S.A.

DNMH -- DIRECCIÓN NACIONAL DE METEOROLOGIA Y HIDROLOGIA

Sector	
AGRICULTURE	[ ]
SMALL SCALE INDUSTRY/ARTISANRY	[ ]
WATER & SANITATION	[ ]
ENERGY	[X]

AT Initiative	Present	Potential
Research	[ ]	[ ]
T/A Demonstration	[ ]	[ ]
Manufacture/Construction	[X]	[ ]
Dissemination/Training	[ ]	[ ]

NAME: DIRECCIÓN NACIONAL DE ELECTRICIDAD (DINE -- National Electricity Office)

ADDRESS: Ministry of Energy and Hydrocarbons
La Paz, Bolivia

CONTACT: Sr. Roja Levi, Director

INSTITUTIONAL SUMMARY: The Dirección is a department of the Ministry. It oversees non-rural electricity producing enterprises. Some electricity is distributed through the Empresa Nacional de Electricidad, which is state-owned.

The Empresa Nacional de Electricidad de La Paz is privately-owned. It uses hydropower. Cochabamba receives its power through hydropower generation. Oruro receives electricity from some neighboring mines. Sucre generates electricity with a diesel-gas plant and has a line to Potosí. Santa Cruz relies on three gas-powered turbines. In the Beni a 150 kw diesel-powered plant exists at Trinidad. Plans for 1980 call for consolidation and interconnection of the power system.

The Ministry tries as much as possible to replace diesel generated power with hydrogeneration. It has aiso a project in the Potosí area to explore the possibility of the use of geothermic sources.

COMMENTS:

One of the big problems of Bolivia is that no water laws exists and that the Ministry has no control over its water sheds for hydropower generation. The Ministry uses a considerable quantity of locally produced eucalyptus posts for its power lines. However, supply is insufficient and posts have to be imported.

It appears that the main interest of the Ministry is to replace diesel generated power with hydropower and to interconnect its power grid as much as possible.

Sector	
AGRICULTURE	[ ]
SMALL SCALE INDUSTRY/ARTISANRY	[ ]
WATER & SANITATION	[ ]
ENERGY	[x]

AT Initiative	Present	Potential
Research	[x]	[x]
T/A Demonstration	[ ]	[x]
Manufacture/Construction	[ ]	[x]
Dissemination/Training	[ ]	[x]

NAME: INSTITUTO NACIONAL DE ELECTRICIDAD RURAL (INER -- National Institute for Rural Electrification)

OFFICE ADDRESS: Avenida Argentina esquina Avenida Saavedra
La Paz, Bolivia

MAILING ADDRESS: Casilla 6061
La Paz, Bolivia

PHONE: 324166 - 358617

CONTACTS: Ing. Ricardo Maldonado Valdes, Executive Director
Ing. Mario Guzman, Chief, Technical Division
Ing. Renaldo Castanon, Junior Engineer

INSTITUTIONAL SUMMARY: This organization, as indicated by its name, is responsible for electrification in rural areas. The country exploits only 1% of its potential hydroelectric power. INER does not supply the mines, which generally use diesel power. While the Altiplano has the highest population density, no general net exists for power distribution. However, an electric line runs from La Paz to the mine "Matilda", one of the largest tin mines in Bolivia.

STAFF: INER maintains a staff of engineers, technicians and administrators.

AT INITIATIVE: INER is quite active both in assessing solar energy potential and in planning for the utilization of systems. It is considering the acquisition of wind powered electrical systems for some of the isolated population centers.

They are also interested in solar energy to heat water, cook, dry grain, and to heat houses in the Altiplano. In general little conventional energy is available in the Altiplano, causing a very restrictive diet, and very little use of warm water for either bathing or laundry. However, on both sides of the Andes, people are settled along the streams where micro plants of 10 - 20 - 50 kw could be installed. INER does operate some micro electric plants such as the 80 kw plant at Guari, a 100 kw plant at Episana, and a plant of 23 kw at Unduri, near La Paz on the way to Yungas.

In the Amazonas headwaters, the rivers are generally very wide and have little drop, thus are not very suitable for economic hydropower production.

While in the past, emphasis for small power plants was on diesel, this is now shifting to other sources as diesel price increases. In one year the price to the government for diesel rose from b$.70/l to b$1.70/l in September 1979.

Prices per kw-hour vary widely in Bolivia. While the price at La Paz is b$.50/kw-hour, at Cobía in the extreme north of the country, it is b$5, because of the high cost of transporting diesel to its isolated power plant.

COMMENTS:

The leaders of this institution seem very interested as a group in alternate power sources, i.e. in getting away from diesel-powered plants where possible, in exploiting Bolivia's hydropower sources as much as possible, and in using wind power experimentally for small plants in suitable isolated areas.

It is reported that the Executive Director of the institution is a very independent-minded person.

INER's thorough planning and preparations should prove invaluable in future applications of solar technologies.

INER has been quite active in solar energy research and development and the staff demonstrates a level of understanding and enthusiasm for solar energy unlike any group encountered in Bolivia. Their proposal for solar energy utilization (see References cited INER 1978.) includes designs for solar cookers and solar greenhouses.

VITA expert Blake concluded that this group could be instrumental in solar and wind energy utilization in rural areas, and suggested that they be given funds to undertake wind prospecting, and be kept informed of all USAID activities in these areas.

Sector	
AGRICULTURE	[ ]
SMALL SCALE INDUSTRY/ARTISANRY	[ ]
WATER & SANITATION	[ ]
ENERGY	[X]

AT Initiative	Present	Potential
Research	[X]	[X]
T/A Demonstration	[ ]	[X]
Manufacture/Construction	[X]	[X]
Dissemination/Training	[ ]	[X]

NAME: EMPRESA NACIONAL DE ELECTRICIDAD S.A. (ENDE -- National Electric Company)

OFFICE ADDRESS: Colombia 4242
Cochabamba, Bolivia

MAILING ADDRESS: Casilla 565
Cochabamba, Bolivia

PHONE: 26104

CONTACT: Ing. Luis Mario Ramirez A., Assistant Manager for Planning

INSTITUTIONAL SUMMARY: ENDE is responsible for implementing electrification.

STAFF: ENDE maintains an extensive staff of engineers, administrators, and related technical people.

AT INITIATIVE: Mario Ramirez of ENDE has been active in the research and development of solar and wind energy resources in Bolivia (see Bibliography) and ENDE currently maintains a network of ten global solar radiation measuring stations.

SPECIAL PROGRAMS: ENDE, in cooperation with COFADENA (Corporación de Fomento y Desarrollo de las Fuerzas Armadas-Av.6 de Agosto, La Paz, Bolivia; or Casilla 2873, Calle Ingari final, Santa Cruz; telephone: 27172; Contact: Ing. Eduardo Escobar E., General Manager)is involved in the development of the Project Rositas, an integrated irrigation hydroelectric land development project south of Santa Cruz on the Rio Rositas and Rio Grande Rivers. The project ultimately plans to develop over 100,000 hectares of agricultural land.

Funding is being provided by the Bolivian Government, the International Monetary Fund, and others. Bechtel (USA), Prudencio Claros y Asociados (Bolivia) and Agrar Und Hydrotechnik GMBH (Germany) are consultants to the project.

Diesel motor-pumps will be used for mining groundwater. Mean annual wind speeds of 2.3 knots have been measured at the site and it is doubtful that wind energy is a usable resource.

COMMENTS:

ENDE will be an important component in developing solar and wind energy resources in Bolivia.

Sector	
AGRICULTURE	[X]
SMALL SCALE INDUSTRY/ARTISANRY	[ ]
WATER & SANITATION	[ ]
ENERGY	[X]

AT Initiative	Present	Potential
Research	[X]	[X]
T/A Demonstration	[ ]	[ ]
Manufacture/Construction	[ ]	[ ]
Dissemination/Training	[ ]	[ ]

NAME: DIRECCIÓN NACIONAL DE METEOROLOGIA E HIDROLOGIA (DNMH -- National Service of Meteorology and Hydrology)

OFFICE ADDRESS: Av. Camacho esq. Bueno
La Paz

CONTACT: Mario Varnedo, Director

AT INITIATIVE: DNMH is responsible for coordinating most wind speed and sun hour data collected in Bolivia. Two-thirds of the country still lack adequate meteorological stations. In the lowlands, the only stations are located at airports, and provide information only of significance to air traffic, i.e. wind velocity and direction, air pressure, temperature and precipitation. Stations should at least have measurements of evaporation and solation. Airport stations in Bolivia were started by PANAGRA (Pan-American-Grace Airlines). These old airport stations have a great deal of accumulated information which needs processing by modern methods. DNMH has put complete stations on all IBTA Agriculture Experiment Stations.

DNMH has an agreement with the UN World Meteorological Service (WMS), which can import instruments into Bolivia duty-free while DNMH has to pay duty like any private organization. Part I of the agreement covers the high altitude river basins; Part II covers the lowlands.

DNMH has 190 stations registering river flow data. However the country needs a minimum of 450 stations to obtain sufficient river flow information.

DNMH has nothing to do with the study of subterranean water, which is done by the Ministry of Mines and Metals.

The latest publication with meteorological data is for 1975 as DNMH lacks funds to publish more recent data.

COMMENTS:

It appears that the service suffers from an extreme lack of funds, and therefore has problems producing the meteorological and river flow data which would be useful to the development of irrigation, agriculture in general, flood control measures and hydro or wind power development.

MINISTERIO DE TRABAJO Y DESARROLLO LABORAL
(Ministry of Labor)

DEPENDENCY SURVEYED:

FOMO -- FOMENTO DE MANO DE OBRA

Sector	
AGRICULTURE	[X]
SMALL SCALE INDUSTRY/ARTISANRY	[X]
WATER & SANITATION	[ ]
ENERGY	[ ]

AT Initiative	Present	Potential
Research	[ ]	[ ]
T/A Demonstration	[X]	[X]
Manufacture/Construction	[ ]	[ ]
Dissemination/Training	[X]	[X]

NAME: FOMENTO DE MANO DE OBRA (FOMO -- National Services for Labor Training)

ADDRESS: Various

CONTACT: Ing. Fadel Akly M., Chief, Department of Programs, Appraisal and Evaluation, FOMO/Santa Cruz

INSTITUTIONAL SUMMARY: Although part of the Ministry of Labor, FOMO is rather independent. Since 1972 it has been charged with preparing and training workers for different sectors of the economy. According to FOMO, only 10% of labor in Bolivia is in the skilled category.

While FOMO has received help from various foreign governments and international organizations, its financial position is very precarious.

Until February 1974, funds were allotted from the National Treasury. Since that time FOMO has received a World Bank loan of US$4,000,000. That loan is guaranteed by the Federal Government, which also pays the interest. As a result, however, no national funds are given to FOMO. Until now about US$400,000 has been available yearly for the nine centers, one in each department. FOMO receives 1% of all payrolls as a tax. This produces about b$22-23,000,000 annually. This is not sufficient for operations. The tax goes to the Central Office in Santa Cruz which, as the biggest center, gets about b$5-6,000,000 back. The second largest center is at Tarija. The main activity in Santa Cruz is in agriculture.

The local organizations get some technical assistance from the International Labor Organization-OIT. They also provide three pick-up trucks and some teaching material.

FOMO works on demand. If there is a request for their services, FOMO investigates the practicality and need for such a course in that area. Each course is made as appropriate and practical as possible.

FOMO pays all housing and transportation costs for course participants. Participants pay only for their food.

FOMO cooperates with CIAT, which has asked FOMO to teach some of their courses.

The milk cattle program is as follows:

First Phase	Cattle nutrition
Second Phase	Treatment of young cattle
Third Phase	Milk technology
Fourth Phase	Pasture management
Fifth Phase	General herd management

It may take one or two years for the students to cover these phases.

The fruit and vegetable units only began in April 1979. Eight courses have been completed. Until now this program has had only one specialist and one vehicle. FOMO wants to add one more specialist and another vehicle (hopefully supplied by OIT).

Following phases one and two in the special courses, there is a break during which FOMO tries to assess the success of the course. FOMO also offers special basic courses for campesinos who want to start something new, such as cattle buying.

The industrial sector is assisted by a German volunteer group and by the GTZ (German Government development assistance organization). Students receive instruction in gasoline engines under rural conditions. FOMO has a center in Montero with shop and storage facilities. If requests are received from more distant areas then all teaching materials are shipped there.

Courses of this type generally take from three to four months. FOMO also gives a nine month course in the radio and TV field for people who want to improve their knowledge and performance in that field. These courses are usually held in the evening so that people can continue to work during the day.

Training in metal Working: FOMO gives basic starter courses for metal working, which last eighteen months. Courses include:

- Basic metal work
- Machines and tools
- Diagnostic and adjustment of gasoline and diesel motors
- Construction and assembly of motors
- Electrical systems of cars and trucks
- Gas and electrical welding

In each course the student has to pass a practical and theoretical test.

Training in Artisanal Production of Ceramics: FOMO also gives instructions in ceramic work using old Indian designs (plates, cups, ashtrays, pots). A market for these items exists in Brazil, as it does for artistic work with high quality wood. Furthermore, FOMO teaches the use of motor saws so that they are better maintained and trees are cut better and more economically.

COMMENTS:

The preceding describes FOMO in Santa Cruz. There are FOMO branches in each department, but their priorities differ with the importance of agriculture to the department. Agriculture is, however, covered in some way in each of the departments. A meeting with the FOMO Central Office in La Paz was arranged but did not take place before the team's unexpectedly early departure. FOMO is active in rural areas and in working with the Department Development Corporations. While the major emphasis of the institution is on industrial skills and training, it should be evaluated as a potential participant in any rural AT projects.

In the northern part of Santa Cruz need exists for technical assistance in production of tomatoes, yuca and corn. Pest control is a major problem. In the suggested AT in agriculture small project, special training for FOMO instructors is included. This training could be the same as that given to selected extension agents of IBTA and probably should include everything from better manure and compost utilization, to appropriate varieties, and AT tools and implements.

Once its instructors are trained, any grant to FOMO would help to make the campesino aware of the benefits he could derive from AT. However, one basic question should be resolved by the Bolivian Government and possibly be raised by AID: What should be the function of FOMO? Shouldn't its agricultural instructors and its agricultural training program be taken over by IBTA? This should be considered as it seems inconceivable that a country so short of trained personnel and short of funds should duplicate organizations with overlapping functions.

MINISTERIO DE PRÉVISION SOCIAL Y SALUD (Ministry of Health)

DEPENDENCIES SURVEYED:

DIVISIÓN DE SANEAMIENTO AMBIENTAL (DSA - DIVISION OF ENVIRONMENTAL SANITATION)

DSA/TARIJA -
UNIDAD SANITARIA DE TARIJA

DSA/CHUQUISACA -
UNIDAD SANITARIA DE CHUQUISACA

DSA/COCHABAMBA -
UNIDAD SANITARIA DE COCHABAMBA

DSA/SANTA CRUZ -
UNIDAD SANITARIA DE SANTA CRUZ

Sector	
AGRICULTURE	[ ]
SMALL SCALE INDUSTRY/ARTISANRY	[ ]
WATER & SANITATION	[x]
ENERGY	[ ]

AT Initiative	Present	Potential
Research	[ ]	[ ]
T/A Demonstration	[ ]	[ ]
Manufacture/Construction	[ ]	[x]
Dissemination/Training	[ ]	[ ]

NAME: DIVISIÓN DE SANEAMIENTO AMBIENTAL (DSA--Division of Environmental Sanitation)

MAILING ADDRESS: Ministerio de Prévision Social y Salud Pública
La Paz, Bolivia

PHONE: 375473

CONTACT: Ing. Luis Araoz

INSTITUTIONAL SUMMARY: The Division of Environmental Sanitation under the Ministry of Health has prime responsibility for rural sanitation and, to a lesser extent for rural water supply. Their other main function is to provide health inspectors for restaurants, markets, slaughter houses, and food processing plants. They are charged with control of garbage collection and disposal but actual services are provided by the municipalities. In effect, DSA has no control or influence over garbage collection or disposal. They merely recommend guidelines which they cannot enforce and the municipalities cannot afford.

The division is operated like a centralized bureaucracy with total technical and financial control held by La Paz. Most department offices have no engineering staff or survey team.

STAFF: The central office in La Paz employs eight engineers, six surveyors, nine administrators, six secretaries and support staff.

SPECIAL PROGRAMS: There are two major programs. One is a US$1,058,000 (for materials) UNICEF program, and the other a USAID project (AID-511-V-058 and 511-0458) financed by a US$4 million loan for materials and a US$200,000 grant for administration. The DSA supplies seventy percent of the cost of the project (from UNICEF or USAID funds) and the community must supply the rest. Part of the cost is in local materials (sand, gravel, wood, etc.) and part is in labor. The community members build the project with DSA supervision. The value ascribed to the local labor and materials is rather arbitrary, particularly the estimates of the work hours of labor required to build any project. The DSA director in La Paz feels the local people must pay something in cash for their water system in order to appreciate it. Labor and materials are therefore estimated at ten to fifteen percent of the cost of the project, putting a cash burden of fifteen to twenty percent of the community.

Another policy of DSA is that community members must build a latrine before they can connect to the water systems. Approximately 1,800 latrines have been built since the beginning of 1978 and an additional 2,000 are estimated for 1980 in conjunction with the planned water system.

One water system visited in Sacabambilla was a very simple gravity flow system for 350 people (48 house connections). The catchment was two small springs on a hillside right above town. Distribution piping was minimal due to the close knit nature of the village. It was the cheapest system Kroschel visited in Bolivia, costing only US$17 per person (systems generally cost US$50 - US$75 per person). The village already had two functioning wells with hand pumps (existing appropriate technologies which were replaced by the centralized system).

AT INITIATIVE: It can be stated that DSA has no conceptualized AT initiative and that, in general, DSA technical staff have no knowledge of AT water and sanitation concepts. Many of the DSA engineers and field workers did however show an interest in acquiring knowledge about AT and how it is being applied to water and sanitation in other parts of the world.

DSA is collaborating with the INGAVI Rural Development Project (see Institution section under Ministry of Campesino Affairs and Agriculture - MACA). One of its engineers is the project director of INGAVI's integrated development program which has an AT component in the local production of handpumps. And under the UNICEF Program, DSA publishes and distributes educational materials which at times cover AT subjects. DSA has produced a "hot to" pamphlet for squat latrines: "Construya Usted Mismo Su Letrina."

COMMENTS:

Except for the Cochamba office, which has a complete engineering staff, Saneamiento Ambiental gave the overall impression of being understaffed and unable to carry out water supply projects without additional support. Their staff is primarily rural sanitation promoters who have too large an area to cover effectively. At least one engineer complained about the lack of education and training of his promoters and the difficulty of finding qualified people who wanted to work and live in rural areas. To implement a small water system, the local engineer (who is primarily an administrator) must request a survey team from La Paz. The team will make a two week visit once a year in which time they will make four or five studies. Fewer studies are made if the sites are far from the department capital but traditionally the projects are planned close to home. The survey team returns to La Paz with the measurements and six months later the designs are returned to the local office (as long as eighteen months after the original petition from the community). The project budget is figured in La Paz, estimating the labor requirements and local materials to be provided by the community.

Many communities simply cannot afford the project and the result is that DSA still has funds from UNICEF that it has not utilized for projects already designed because the community cannot come up with the cash. In Chuquisaca, from the beginning of 1978 to late 1979 two water systems have been completed, four are under construction and ten are on hold because the communities cannot afford twenty percent of the cost in cash. The figures are similar for Tarija: Two systems built, four with signed contracts to be built and eight on hold for lack of funds from the local community.

Sector	
AGRICULTURE	[ ]
SMALL SCALE INDUSTRY/ARTISANRY	[ ]
WATER & SANITATION	[X]
ENERGY	[ ]

AT Initiative	Present	Potential
Research	[ ]	[ ]
T/A Demonstration	[ ]	[ ]
Manufacture/Construction	[ ]	[X]
Dissemination/Training	[ ]	[ ]

NAME: DSA/TARIJA -- UNIDAD SANITARIA DE TARIJA (Division of Environmental Sanitation Office in the Health Unit of Tarija)

STAFF: The Unit employs one engineer, two technical staff who supervise construction and ten rural promoters.

COMMENTS:

See comments for Saneamiento Ambiental.

Sector	
AGRICULTURE	[ ]
SMALL SCALE INDUSTRY/ARTISANRY	[ ]
WATER & SANITATION	[X]
ENERGY	[ ]

AT Initiative	Present	Potential
Research	[ ]	[ ]
T/A Demonstration	[ ]	[ ]
Manufacture/Construction	[ ]	[X]
Dissemination/Training	[ ]	[ ]

NAME: DSA/CHUQUISACA - UNIDAD SANITARIA DE CHUQUISACA (Division of Environmental Sanitation in the Health Unit of Chuquisaca)

MAILING ADDRESS: Casilla 109
Sucre, Bolivia

OFFICE ADDRESS: Saneamiento Ambiental
Calle Ramirez 182
Sucre, Bolivia

PHONE: 3147

CONTACT: Tec. Nestor Perez R., District Supervisor, Saneamiento Ambiental

STAFF: This Unit's staff consists of one engineer, one construction supervisor, one draftsman, one administrator and one secretary. In addition, there are eighteen field sanitary technicians--at least one in each of ten provinces. These technicians follow a ten month course in environmental sanitation in La Paz, sponsored by UNICEF.

SPECIAL PROGRAMS: See discussion of Saneamiento Ambiental Special Programs. UNICEF pays for materials on a loan basis, while long-term funds come through the La Paz office. The four northern provinces are part of a USAID project which was just getting underway at the time of the visit.

COMMENTS:

Ten dug wells which have been installed at schools use Dempster hand pumps provided through UNICEF funds. This imported model is specified over locally made handpumps of equal value and half the cost. Dempster pumps use a leather packing which is not available in the country. No provision for spare parts was made, and individual imports would be prohibitively expensive. Local packings could be made, but there is no organized service established by Saneamiento Ambiental. Also the pumps use 1¼" pipe--a size unavailable in the country, which means that pipe lengths cannot be changed and the pump lacks versatility. Protective tariffs need to be imposed to promote local industry or tariffs reduced on raw materials imported by plastic pipe factories so that their product can compete with imported pipe. (See also comments at the end of the Saneamiento Ambiental report).

Sector	
AGRICULTURE	[ ]
SMALL SCALE INDUSTRY/ARTISANRY	[ ]
WATER & SANITATION	[x]
ENERGY	[ ]

AT Initiative	Present	Potential
Research	[ ]	[ ]
T/A Demonstration	[ ]	[ ]
Manufacture/Construction	[ ]	[x]
Dissemination/Training	[ ]	[ ]

NAME: DSA/COCHABAMBA -- UNIDAD SANITARIA DE COCHABAMBA (Division of Environmental Sanitation Office in the Health Unit of Cochabamba)

OFFICE ADDRESS: Calle N. Aguirre 861, esq. Montes
Cochabamba, Bolivia

PHONE: 26614

CONTACT: Ing. Juan Carlos Ricaldez

INSTITUTIONAL SUMMARY: The Cochabamba office is more independent than the other DSA offices. It has its own engineering staff with surveyors and draftsmen. With the new USAID contract it will have its own budget and the ability and authority to study, design, and build small water systems. It has built five small systems since receiving the funds. Fifty more are planned over the next two years and 200 are envisioned during the four year contract period.

STAFF: The staff consists of one engineer, one surveyor, and one construction supervisor. Thirty-five to fifty people from the community are volunteers involved in building.

COMMENTS:

See comments under Saneamiento Ambiental.

Sector	
AGRICULTURE	[ ]
SMALL SCALE INDUSTRY/ARTISANRY	[ ]
WATER & SANITATION	[x]
ENERGY	[ ]

AT Initiative	Present	Potential
Research	[ ]	[ ]
T/A Demonstration	[ ]	[ ]
Manufacture/Construction	[ ]	[x]
Dissemination/Training	[ ]	[ ]

NAME: DSA/SANTA CRUZ -- UNIDAD SANITARIA DE SANTA CRUZ (Division of Environmental Sanitation Office in the Health Unit of Santa Cruz)

OFFICE ADDRESS: Calle Sucre
Santa Cruz, Bolivia

PHONE: 23171

CONTACT: Ing. Cortez, District Engineer

STAFF: This Unit has no surveyors or technicians of its own. It does have one public health technician in each of eleven provinces.

Sector	
AGRICULTURE	[ ]
SMALL SCALE INDUSTRY/ARTISANRY	[x]
WATER & SANITATION	[ ]
ENERGY	[ ]

AT Initiative	Present	Potential
Research	[ ]	[ ]
T/A Demonstration	[ ]	[x]
Manufacture/Construction	[ ]	[ ]
Dissemination/Training	[ ]	[x]

NAME: MINISTERIO DE BIENESTAR SOCIAL E ASUNTOS DE MUJERES (Ministry of Social Welfare and Women's Affairs)

OFFICE ADDRESS: Edificio de la Loteria Boliviana
La Paz, Bolivia

CONTACT: Gladys de Mercado, Director
Rosa Cors de Villegas, Social Promoter

COMMENTS:

This ministry was created during the period of the AT Bolivia field survey. It may have a special potential to provide technical assistance in the areaa of water and sanitation and artisanal production, especially assistance which is directed to women capesinos and which can integrate Appropriate Technology.

MINISTERIO DE PLANEAMIENTO Y COORDINACIÓN
(Ministry of Planning and Coordination)

DEPENDENCIES SURVEYED:

OFICINA DE CIENCIA Y TECNOLOGIA (OCT-Office of Science and Technology)

DIRECCIÓN DE PLANEAMIENTO Y POLITICA SOCIAL GLOBAL (DISOG-Department for Planning of Overall Social Policy)

DESARROLLO DE COMUNIDAD INTEGRAL (DCI-Department for Integrated Community Development)

Sector	
AGRICULTURE	[X]
SMALL SCALE INDUSTRY/ARTISANRY	[X]
WATER & SANITATION	[X]
ENERGY	[X]

AT Initiative	Present	Potential
Research	[ ]	[ ]
T/A Demonstration	[X]	[ ]
Manufacture/Construction	[ ]	[ ]
Dissemination/Training	[X]	[X]

NAME: OFICINA DE CIENCIA Y TECNOLOGIA (OCT-Office of Science and Technology)

OFFICE ADDRESS: Ministry of Planning and Coordination
Avenida Arce
La Paz, Bolivia

PHONE: 371914

CONTACTS: Lic. Carlos Aguirre, Director (through 11/79)
Dr. Gaston Bejarano, Scientific Advisor

INSTITUTIONAL SUMMARY: The Office of Science and Technology is responsible for formulating scientific and technological planning and policy in Bolivia. It coordinates a wide variety of activities and information. They have an extensive committee structure representing industry, mining and metals, agriculture, communications, transportation, human resources, social and cultural problems, and energy, to name but a few.

OCT has expressed an interest in coordinating interdepartmental programs within the Government of Bolivia. They also see their role as finding funds for projects and as helping to direct Government funds.

STAFF: OCT has a full-time staff of six people.

COMMENTS:

Lic. Aguirre noted the difficulties of coordinating two or more groups in any given project to achieve public sector objectives. Yet, OCT exists to undertake such coordination in the field of science and technology.

OCT was receptive to Appropriate Technology and actively coordinates some activities through conferences and learning programs, including arranging short term foreign training for Bolivian scientists.

It was the conclusion of VITA that the OCT is in the most strategic position of any Bolivian governmental agency to catalyze the promotion and use of Appropriate Technology. OCT was therefore recommended as the potential counterpart institution for the Appropriate Technology Program in Bolivia. See Chapter Two: Recommendations for further details.

Sector	
AGRICULTURE	[x]
SMALL SCALE INDUSTRY/ARTISANRY	[x]
WATER & SANITATION	[ ]
ENERGY	[ ]

AT Initiative	Present	Potential
Research	[x]	[x]
TA/Demonstration	[ ]	[ ]
Manufacture/Construction	[ ]	[ ]
Dissemination/Training	[ ]	[ ]

NAME: DIRECCIÓN DE PLANEAMIENTO Y POLÍTICA SOCIAL GLOBAL (DISOG -- Department for Planning of Overall Social Policy)

MAILING ADDRESS: Ministry of Planning and Coordination
Avenida Arce
La Paz, Bolivia

CONTACTS: Sra. Castanos
Lic. Jorge Velarde

INSTITUTIONAL SUMMARY: DISOG began operation in 1974. Its parent institution, the Ministry of Planning and Coordination, has been in existence since 1957/58. Any plans prepared by DISOG (or by the Ministry) go to CONEPLAN for approval. DISOG is not an executing agency. It only makes overall plans.

DISOG is headed by Sra. Castanos. Lic. Velarde is a member of the department. The two have done some studies on work and income distribution. A population project, including a census, information on social income, regional distribution, reasons for migration, employment, and human resources, was financed by UNICEF. UNICEF also supplied funds for a project director, Carlos Carato. DISOG has also studied the role of women in Bolivia and carried out some manpower studies.

Guidelines have been developed for population control, promotion of crafts and plans for the betterment of campesino women. DISOG was assisted in the latter by the Comite Interamericano de Mujeres, under Ms. Gabriela Touchard.

Bolivia has laws for the protection of women. For example, women are to be given three months vacation when giving birth. However, there is a lack of executing agencies to enforce the laws.

Bolivian Social Security covers about 25% of the employed population. Social Security operates hospitals, and gives medical treatment and medicine gratis. The agricultural population is not insured, but the various General Hospitals are available to non-insured persons. Furthermore, there are health posts distributed throughout the country, which are under the supervision of the Ministry of Health. There are no family planning clinics in Bolivia as the consensus of opinion is that Bolivia is underpopulated.

There are programs for food distribution to the poor, such as a school lunch (actually breakfast) program, which distributes mainly milk and bread. There are also "Mothers Clubs" for the improvement of women.

The Social Security system also has a pension program for those insured. This also does not cover any part of the rural population.

STAFF AND ORGANIZATION: There are presently twenty employees in the department, of which fifteen are professionals and the other five are still students. The professionals are social scientists, economists and statisticians.

Figure III-4
Table of Organization

DISOG

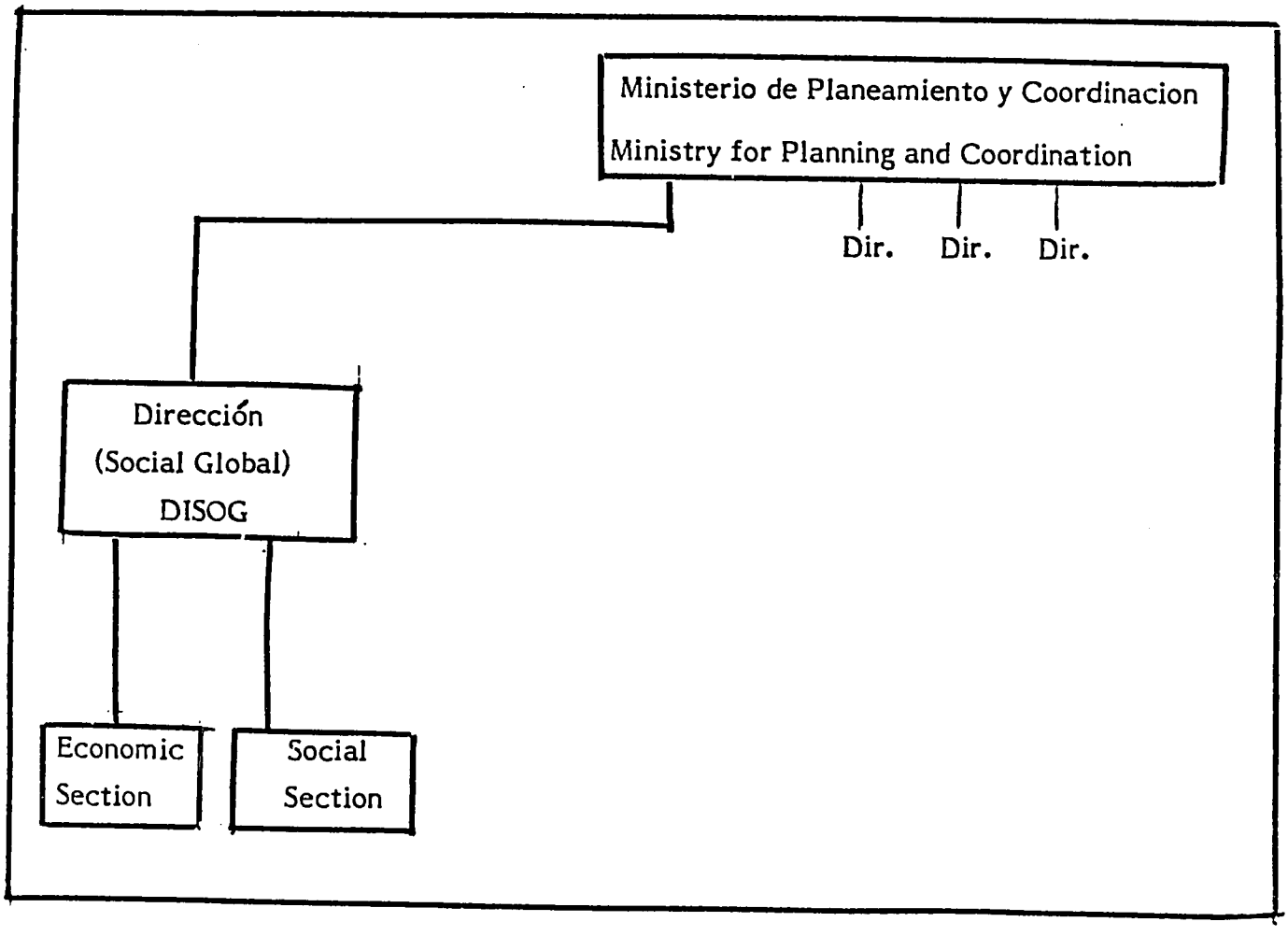

Figure VII-5

Table of Organization

CONEPLAN

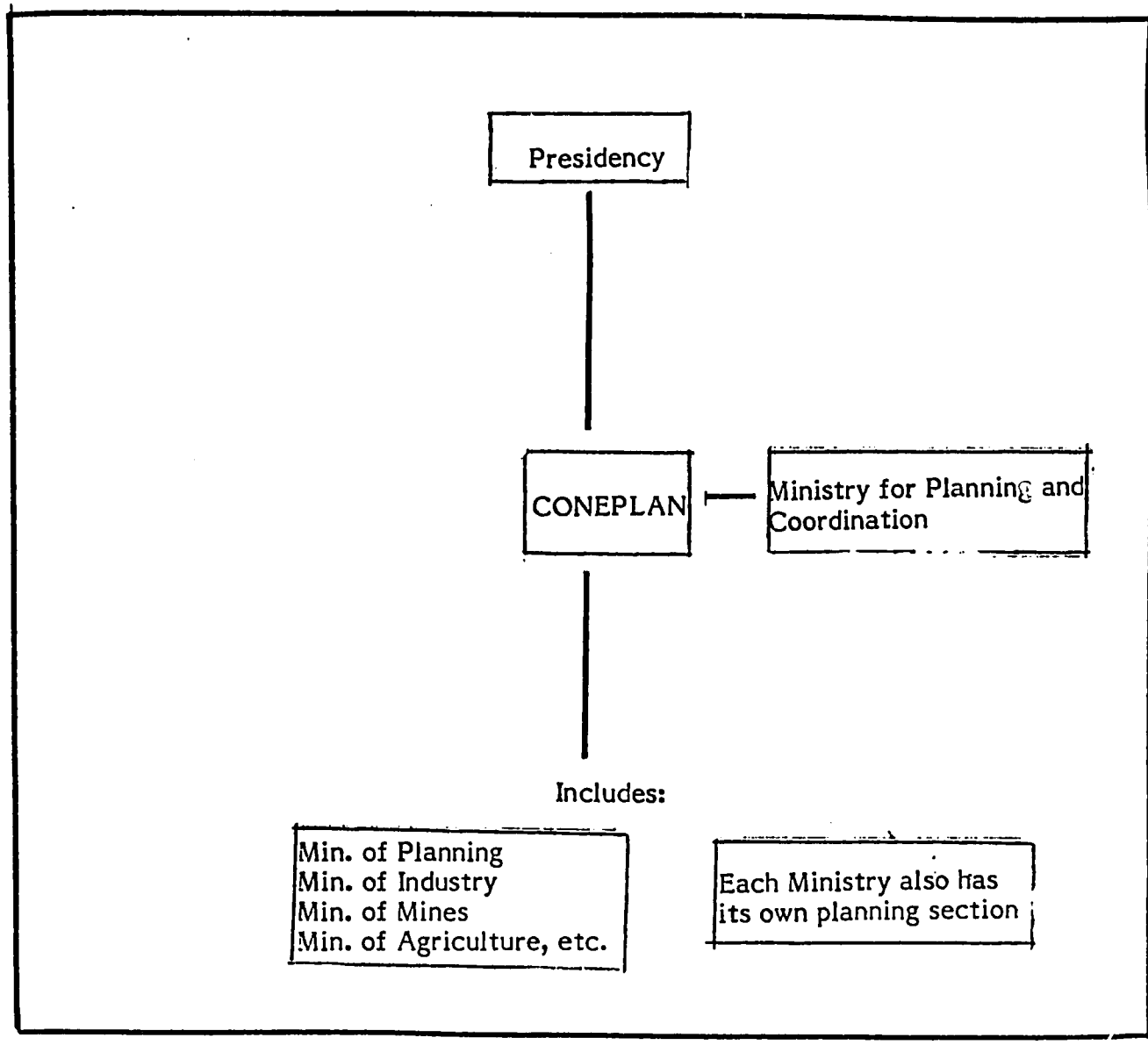

COMMENTS:

While DISOG has no direct interest or understanding of AT, it may plan or influence programs with a potential for AT, and it has the capacity to collect and analyze relevant macro-level socio-economic studies.

Sector	
AGRICULTURE	[X]
SMALL SCALE INDUSTRY/ARTISANRY	[X]
WATER & SANITATION	[ ]
ENERGY	[X]

AT Initiative	Present	Potential
Research	[X]	[X]
TA/Demonstration	[ ]	[ ]
Manufacture/Construction	[ ]	[ ]
Dissemination/Training	[ ]	[ ]

NAME: DESARROLLO DE COM UNIDAD INTEGRAL (DCI -- Department for Integrated Community Development)

MAILING ADDRESS: Ministry of Planning and Coordination
Avenida Arce
La Paz, Bolivia

CONTACTS: Carlos Garcia, Director
Dr. Hugo Romero

INSTITUTIONAL SUMMARY: DCI is a planning department of the Ministry of Planning and Coordination. Any execution of plans developed by DCI is through regular Government departments. DCI is quite new.

As at least half of the population of Bolivia is rural and poor, DCI plans to study the conditions in the field and to make its recommendations for the improvement of the lot of the campesino to the GOB. Past investments in Bolivia have been strongly directed toward the industrial and urban sector.

AT INITIATIVE: The department is very interested in AT for Bolivia. Many old techniques have been lost, although the Anthropological Institute of the Ministry of Education is making a systematic study of the culture of the Aymara and Quechua people, something which has been neglected until fairly recently.

DCI feels that there is an urgent need to control deforestation and to develop more sources for small farmer irrigation. DCI reports there is a lot of saline ground water in the southern part of the Altiplano, while the quality in the northern part is good. Rains on the average are 700 mm annually, and agriculture consists of potatoes, barley, quinua (Andean grain cereal), wheat, beans and tarhui (a type of lupine).

It is probable that many lakes could be developed for agriculture. Some have algae growing which is consumed by cattle. The trout is not a native fish of Lake Titicaca, but was introduced and has destroyed the original fauna. (Reportedly very little trout can be found in the Bolivian parts of Lake Titicaca). Bolivian rivers flowing toward the La Plata region are full of fish, but very few are eaten by the people. Fish are caught and loaded on unrefrigerated trucks, which bring them to La Paz. When the fish start to smell, the remainder is dumped, resulting in a great waste of this resource.

DCI reports that in many rural areas the bicycle has replaced animals as a means of transportation for the campesinos. It has also become a status symbol. The campesino's handling of bicycles has shown that they possess considerable mechanical ability.

DCI suggests that if solar heaters could be sold in the b$2-300 range, they would probably have a market among the campesinos.

COMMENTS:

This Department is new and not very clear in which way it will go. DCI is very interested and open to the idea of AT in general, although it is rather vague on any actual application.

GOVERNMENT OF BOLIVIA

DEPARTMENT OR REGIONAL DEVELOPMENT CORPORATIONS (DDCs)

INSTITUTIONS SURVEYED:

CORDECRUZ - CORPORACION REGIONAL DE DESARROLLO DE SANTA CRUZ

CORDEPO - CORPORACION DE DESARROLLO DE POTOSI

CORDECO - CORPORACION DE DESARROLLO DE COCHABAMBA

(For Water and Sanitation Only:)

CORDECH-CORPORACION DE DESARROLLO DE CHUQUISACA

CODETAR-CORPORACION DE DESARROLLO DE TARIJA

GENERAL COMMENTS ON THE DDCs: The Department Development Corporations are institutions under the general coordination of CONEPLAN, the Secretariat of the National Council for Economic Planning. Each corporation operates as a separate institution responsible for planning within each department. For more information, AID LAC/DR Bolivia Project Paper Rural Development Planning 511-0471 LAC/DR: 78-10, pp. 10-15, 48-54.)

The Development Corporations are in a very good position to coordinate the implementation of appropriate technology in conjunction with an extension agency. The DDCs are the best technically staffed and the best equipped organizations within the Government. They generally have only one engineer for the small water supply department but they can draw on support from civil engineers working in irrigation or roadbuilding. Each department has the support of a survey team and map makers (some are assigned full time within the department), and technical or construction supervisors. They also have the bureaucratic and accounting infrastructure to handle grants and process the necessary paper work. However, DDCs lack promoters or village level field workers. They are centered mainly in the department capitals and along the paved roads. They could provide the administrative and technical support, transportation and equipment but would have to rely on extensionists such as SNDC, Saneamiento Ambiental, university extensionists, or a private voluntary organizations for field implementation of projects.

With regard to industry, emphasis is generally on large projects in the urban centers and on advanced technologies. They do however get into rural industry in their planning. Personnel at the Departmental Development Corporations interviewed about rural industry (Santa Cruz and Chuquisaca) were very receptive to AT concepts. Both these Corporations had plans or interests in developing rural industry as lower priority projects, but they have not received funding to implement these plans.

The corporations are staffed with qualified personnel to carry out AT projects if they were provided AT technical and field assistance.

As for the future role of the Development Corporations in AT projects, each corporation would have to be evaluated separately; however, they could prove quite valuable in the preinvestment and technoeconomic feasibility studies, project monitoring and evaluation. They have the potential to perform well in infrastructure planning and in implementation. Their weakness would be in social promotion. They would have to be directed to stay on an AT course and not to wander into textbook engineering solutions. The Corporations interviewed showed enthusiasm for AT concepts from the engineering point of view, but showed little understanding of AT as a development concept.

Sector	
AGRICULTURE	[X]
SMALL SCALE INDUSTRY/ARTISANRY	[X]
WATER & SANITATION	[X]
ENERGY	[X]

AT Initiative	Present	Potential
Research	[X]	[X]
T/A Demonstration	[X]	[X]
Manufacture/Construction	[X]	[X]
Dissemination/Training	[ ]	[X]

NAME: CORPORACIÓN REGIONAL DE DESARROLLO DE SANTA CRUZ (CORDECRUZ--Regional Development Corporation of Santa Cruz)

MAILING ADDRESSES: Casilla 212 (Industrial Projects)
Casilla 219 (Planning, Project Identification)
Casilla 218 (Power)
Santa Cruz, Bolivia

OFFICE ADDRESSES: 308 La Paz, esq. Warnes; Calle Saavedra, esq. Chuquisaca
Santa Cruz, Bolivia

PHONES: 36903 (Industrial Projects); 38961 (Potable Water Department)

CONTACTS: Lic. Bolivar, Director of Planning
Lic. Hugo Viruez, Departmental Project Identification
Ing. Jorge C. Bendek C., Chief of Industrial Projects
Ing. Vidal Vargas Anez, Industrial Engineer
Ing. Ernesto Linghtentein, Chief, Electrical Systems
Ing. Candia, Potable Water Department

INSTITUTIONAL SUMMARY: CORDECRUZ was organized as a Department Development Corporation in 1978; for seven years prior, a "Comité de Obras Publicas" (Committee for Public Works) existed. CORDECRUZ has a planning division and an implementation division. A Table of Organization follows ; CORDECRUZ is in part supported by petroleum revenues.

SPECIAL PROGRAMS: The Departmental Project Identification staff has planned many projects (cf. CORDECRUZ, Identificacion de Proyectos de Area, July 1979). This planning involves identification of potential projects and the preparation for each of a general outline of the project, called a project profile (perfil). Because CORDECRUZ is a large, complex DDC, these activities are reported for each sector.

Figure VII-6
Table of Organization CORDECRUZ

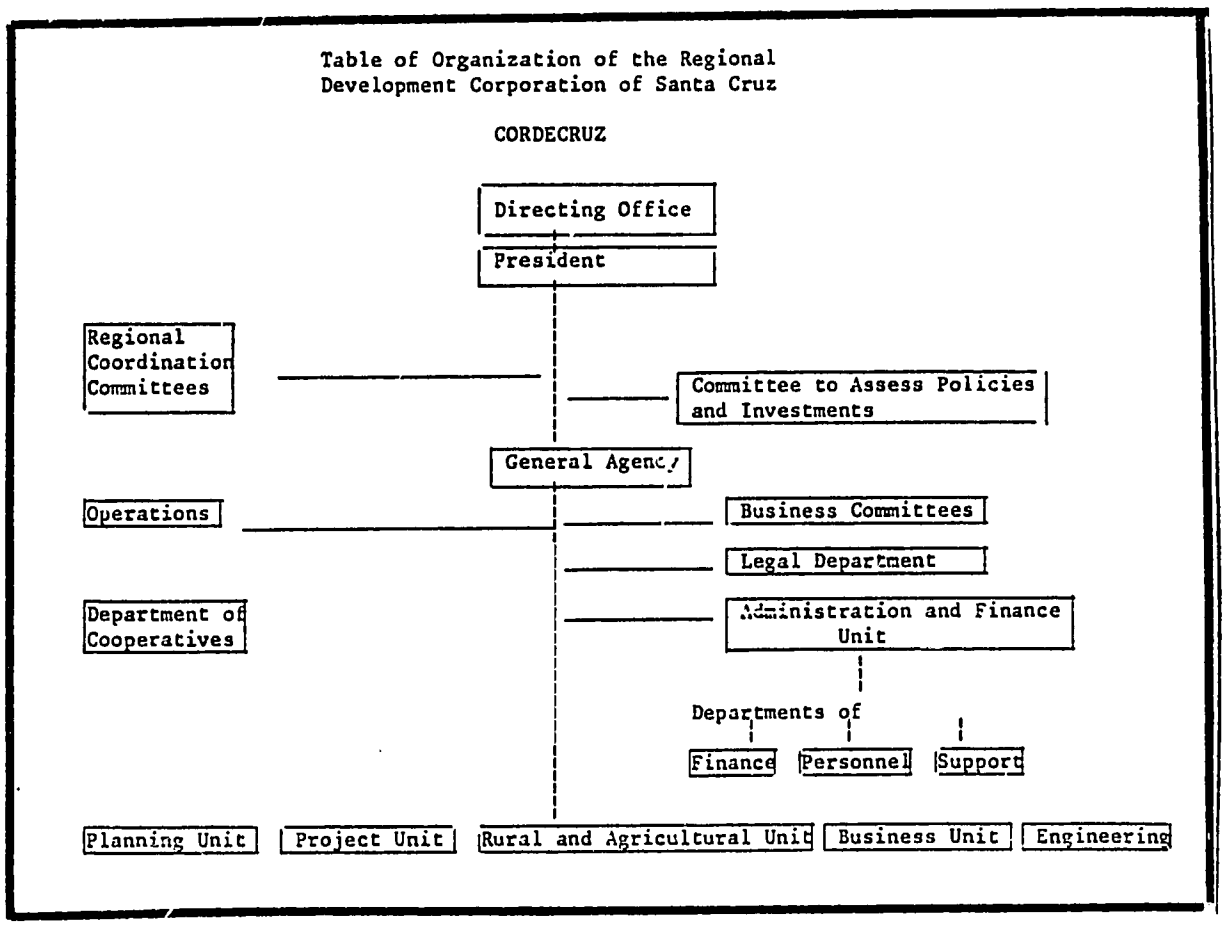

Agriculture: Within the planning division of CORDECRUZ and within the implementation division, there is a unit for rural and agricultural programs called the Unidad de Programas Rurales y Agropecuarios (UPRA - Unit for Rural and Agricultural Programs).

UPRA has planned two types of projects: Rural Development Projects and "Specific Projects." Rural Development Projects are aimed at a specific community, colonization zone or micro-region and have components such as equipping sanitary posts, extending the road system, in roadbuilding activities which will use World Food Program "food for work", school construction, introduction of commercial crops (i.e. peanuts, tobacco, coffee, citrus fruits, etc.), improvement of subsistence crops (rice, maize, yuca, beans and bananas), improvement and increase of dairy herds, etc. The specific projects focus on improvement of agricultural stocks, seeds, breeds or infrastructure.

Rural Development Projects in various stages of implementation or planning are located in San Ignacio de Velasco, in the Cuenca Lechera de San Javier, in the Valles Mesotérmicos--a project executed by DESEC (See Institutional Report for DESEC Group below), and in the eastern sector of Cordillera Province. Rural Development Projects to consolidate colonizations are planned for Yapacaní, in conjunction with CIAT, MACA and the Inter-American Development Bank; for San Julian, to be executed by CIAT, MACA, a USAID contractor and the World Bank; and for the Northern Area, under pending agreements with the World Bank.

The Specific Projects identified include:

- Beneficiadora de Café: to found coffee processing plants near production areas and other food processing industries (see below)
- Fondo Ganadero: to establish new cattle farms in conjunction with the federation of ranchers
- Semillero: to implement field trials, import and distribute new improved seed varieties in conjunction with MACA
- Sistema de Registro en Granjas Lecheras: to found two registries for dairy herds
- Mejoramiento de la Raza Criollo: to improve the "criollo" breed of dairy cattle by selecting superior examples of the race as breeders
- Fomento y Mejoramiento de la Papa: to increase the yield and quality of potatoes by diffusing the use of superior quality seed potatoes, fertilizers, pesticides and suitable crop rotation systems and to improve marketing
- Desarrollo fruticola de Durazno y Manzano para la Provincia de Vallegrande: to increase peach and apple production through improved technologies
- Construc ión de Atajados: to construct wells for cattle herds
- Centros de Acopio de Granos: to construct a system of both large (20,000 tons) and small (500-1,000 tons) grain silos

- Forestal: to reforest, introduce silvaculture and to import wood processing technology in collaboration with IICA, CAF and the World Bank.

AT INITIATIVE - Agriculture: One project planned is an animal traction project for small farmers in the Chicitania area, near San Ignacio, Department of Santa Cruz. This is planned in cooperation with the Mennonite Central Committee. It estimates that it would need b$ 1,800,000 (US$ 90,000). This would provide teams to sixty campesinos at the cost of b$ 30,000 per team. Money would be loaned to campesinos on long term credits. If the project is extended to the two other areas suggested, the amount needed would be about three fold.

Their plans for some other projects to introduce improved cattle and to bring veterinary services to the small farmer could integrate Appropriate Technology.

Another project, Centro Servicios de Demonstración, Capacitación y Transferencia Tecnológica, proposes to reorganize the existing experimental stations of CIAT, CIMA, CORGEPAI, the Universidad de Santa Cruz and the Japanese colonies as demonstration and training centers for the transfer of agricultural production technology. AT training could, potentially, be introduced in such centers.

COMMENTS:

Lic. Bolivar forwarded the project profile for the animal traction project. It appears to be one project which would promote AT. AT it will be done in cooperation with the Mennonite group, it may have a fair chance of success as they have worked in this field for some time. (See Mennonite Central Committee report under non-profit religious institutions, below). If the initial project is successful more funds could be channeled in parallel projects in other areas.

Small Scale Industry/Artisanry: The industrial projects section works primarily with urban, high technology industries. Their highest priority is to develop metal industries capable of producing parts and machines in connection with the Andean Pact allocation of heavy industries. Their second priority is to develop a high technology wood industry, capable of producing hardwood veneers. At present, Santa Cruz hardwoods are exported to such plants in Brazil.

Several small industry/artisanal projects in food processing are planned. One precondition for the development of these projects is seen to be the development in Santa Cruz of a testing and control laboratory to establish standards for food processing and packaging, especially of canned goods. The only such laboratory in Bolivia is in La Paz. None of the existing food canneries are operating at capacity.

The small scale, rural artisanal projects in the planning stage include:

- Centro de Acopio de Tomate, a proposed tomato processing plant to be located in Comarapa

- Industrialización de Pimiento - proposed installation of an artisanal, small industry to produce pepper (from pimentón-Capsium annum) and paprika in the Mesotérmico Valleys

- Encurtido de Hortalizas - a plan to form four modules of ten farming families each to produce and pickle vegetables in a rural farming/artisanal industry

- Industrialización artesanal de Mani - proposed installation of a small scale, six person artisan industry in the Mesotermico Valleys to produce processed peanuts for cooking and roasted peanuts.

Also planned is the formation of an institute to perform market studies to test the feasibility of commercialization for proposed industrial products.

COMMENTS:

CORDECRUZ seems to favor high technology solutions to the development problems of Santa Cruz, however there are a number of programs and projects where AT could be introduced.

Water and Sanitation: The Department of Potable Water of CORDECRUZ has a staff of two topographers, four engineers, six supervisors of promotors and drivers. In the project known as Conclusion de la Dotacion de Aquas Potables a Poblacionas Menores, they install potable water systems in communities of 500 to 2,000 persons. In 1979, for example, they completed a well and pump system with an elevated tank for a community of 500 persons. The cost of the potable water systems they build run approximately US$75 or b$1500/per person. They have also drilled a well in another community, but have no funds to complete the project. Two other projects are planned, seven are under design as first priority projects and five others are under design as second priority. A total of 20 small wells at a cost of 1000 to 1500 pesos per meter are planned, but the department no longer has budget funds to carry out these plans.

COMMENTS:

The Department of Potable Water has a good potential for AT applications. They are concerned with community water systems, rather than individual water supplies. They seem unaware of the Mennonite well drilling operations, and are dependent upon hiring a commercial rigfor drilling.

Energy: One section of CORDECRUZ runs electrical generation activities and has a staff of 100, including engineers and technicians responsible for the design, installation and maintenance of electrical systems. They operate a total of 15,000 kw of diesel generator capacity, which serves numerous locations, including many schools and small hospitals. This section's major planned project is Integracion de Redes Electricas Provinciales, to unite the current grid.

COMMENTS:

Given the good winds in Santa Cruz Department, this group could be actively involved in a program of wind energy development, the first phase of which would be to begin prospecting for good wind sites.

Sector	
AGRICULTURE	[x]
SMALL SCALE INDUSTRY/ARTISANRY	[x]
WATER & SANITATION	[x]
ENERGY	[x]

AT Initiative	Present	Potential
Research	[x]	[x]
T/A Demonstration	[x]	[x]
Manufacture/Construction	[x]	[x]
Dissemination/Training	[ ]	[x]

NAME: CORPORACIÓN REGIONAL DE DESARROLLO DE POTOSÍ (CORDEPO-Department Development Corporation of Potosí)

MAILING ADDRESS: Casilla 230
Potosi, Bolivia

OFFICE ADDRESS: Calle Omiste esq. La Paz
Potosí, Bolivia

PHONE: 5400, 2323

CONTACT: Lic. Alfredo Belott F., Director of Planning

INSTITUTIONAL SUMMARY: CORDEPO was organized in 1978 incorporating the Comite de Obras Publicas (Committee of Public Works) of the city of Potosi which had been founded in 1968. The central staff is housed in a former monestary. There are four sub-department offices in Uncia, Cotagaita, Colcha-k, Acacio. Each of these field offices has a two person staff in charge of resource surveys.

CORDEPO has a formal institutional relationship with the Department of Regional Planning in the Ministry of Planning and Coordination and is one of five departments participating in the AIL Rural Planning Grant project. CORDEPO signs formal contracts with the Ministries of Agriculture and of Mines for joint works and has verbal agreements with various municipalities, prefectures, and towns (alcadias) for which CORDEPO build public works.

STAFF: A president is selected by the President of the Republic from a set of three Potosinos nominated among citizens. Staff positions are filled by national merit contests. CORDEPO has approximately 200 full time employees, of whom about 70 are university trained professional and about 100 are graduates of technical schools. Professionals include civil, mining and hydraulic engineers; economists, regional planners, physicians, attorneys, auditors, journalists and rural promoters. The best developed capacity of the organization is for construction of roads and potable water systems.

AT INITIATIVE-Agriculture: The Potosi DDC is planning to emphasize development of the agricultural sector beginning in FY 1980. Efforts will include participation in a program to increase production of the native Andean cultigen, tarhui, and to develop suitable industrial processing of this legume. Appropriate initiatives in the areas of aquaculture, soil protection including reforestation, afforestation and reserves are in the planning stage.

Energy-CORDEPO expressed interest in identifying sites for a related AID survey for "mini-hydro" sites.

Water and Sanitation-CORDEPO completed a study in 1979 documenting the widespread problem of water contamination in Potosi. Both streams and in some areas ground water have been contaminated by mining activities. Based on the results of this study, CORDEPO engineers are designing appropriate technical solutions tailored to the situations in locations were CORDEPO is committed to build village potable water systems.

Sector	
AGRICULTURE	[X]
SMALL SCALE INDUSTRY/ARTISANRY	[X]
WATER & SANITATION	[X]
ENERGY	[X]

AT Initiative	Present	Potential
Research	[ ]	[ ]
T/A Demonstration	[ ]	[X]
Manufacture/Construction	[X]	[X]
Dissemination/Training	[ ]	[X]

NAME: CORPORACIÓN DE DESARROLLO DE COCHABAMBA (CORDECO--Department Development Corporation of Cochabamba)

MAILING ADDRESS: Casilla 4096
Cochabamba, Bolivia

CONTACTS: Lic. Carmen de Vargas, Head, Agricultural Planning Unit
Dr. Herbert Albrecht, Advisor, Agricultural Planning Unit/ German Technical Cooperation

INSTITUTIONAL SUMMARY: CORDECO is a Departmental Development Corporation.

STAFF: The President of CORDECO, or any other Department Development Corporation, reports to the Minister of Planning and Coordination. CORDECO has several executing units. Their directory shows these sub-divisions:

Presidencia	(President's Office)
Director de Planificación	(Director of Planning)
Relaciones Publicas	(Public Relations)
Secretaria General	(Secretary General)
Asesoria Legal	(Legal Office)
Director de Programas y Proyectos	(Director of Programs and Projects, i.e. executing units)
División Finanzas	(Financial Department)
Almacenes	(Stores and Warehouses)
División Administrativa	(Administrative Department)
Director Control Gestion	(Director for Petitions)
Biblioteca	(Library)
I.N.E	(Electrification Department)

SPECIAL PROGRAMS: The Technical Cooperation program of the Government of the West German Republic has placed advisors in the following fields:

- Regional Planning
- Micro-regional Planning
- Water Resources
- Rural Development Planning
- Agricultural Planning

AT INITIATIVE-Agriculture: The main interest of the agricultural planning section is to promote water management on small farms through improved land levelling. Small irrigation schemes in the Cochabamba area suffer often from salinity problems. There is interest in simple levelling techniques using oxen and in small pumps, which might permit wider distribution of water which cannot be irrigated by simple gravity flow. The Agricultural Planning Unit is very interested in AT and had about US$350 worth of VITA publications on order.

The Agricultural Planning Unit coordinates its activities through the DDC with the Departamento de Micro-Riego, surveyed below.

COMMENTS:

The visit to CORDECO was well arranged, but Licenciado Vargas was called in the last minute to a major meeting. A planned visit to the CORDECO irrigation section did not materialize.

The Department Development Corporations are generally quite dynamic organizations in Bolivia. The one in Cochabamba has a good reputation. They are well attuned to local needs and happenings.

Sector	
AGRICULTURE	[X]
SMALL SCALE INDUSTRY/ARTISANRY	[ ]
WATER & SANITATION	[X]
ENERGY	[ ]

AT Initiative	Present	Potential
Research	[ ]	[ ]
T/A Demonstration	[ ]	[ ]
Manufacture/Construction	[ ]	[X]
Dissemination/Training	[ ]	[ ]

NAME: CORPORACIÓN DE DESARROLLO DE CHUQUISACA (CORDECH--Department Development Corporation of Chuquisaca)

MAILING ADDRESS: Casilla 156
Sucre, Bolivia

OFFICE ADDRESS: Calle Pastor Sainz, esq. Rosendo Villa
Sucre, Bolivia

PHONE: 2390, 2565, 2288

CONTACTS: Ing. Tirson Mina
Ing. Alberto Pinto
Lic. Saul Leon Ortuno, Chief of Social Development Department
Ing. Edmundo Zelada S.

INSTITUTIONAL SUMMARY: This DDC is structured similarly to the others. Only their program in Potable Water was surveyed.

SPECIAL PROGRAMS: The Dirección de Agua Potable (Directorate of Potable Water) in the CORDECH Departamento de Infraestructura (Department of Infrastructure) is staffed by two engineers, one draftsman and one surveyor, three construction supervisors, drilling rig crews, with a support staff of clerical workers, mechanics and manual laborers. They are also assisted by three engineers in CORDECH's engineering department. Their program is in part supported by USAID, CARE and UNICEF contracts and collaborative efforts with the SNDC.

CORDECH has a three year contract with CARE to build water systems for settlements with 200 to 2,000 inhabitants. They have completed twelve community systems in the past two years and have eight under construction. Six more are being designed and an additional four are in the planning stage. CARE has a happy relationship with CORDECH. They feel CORDECH has been very cooperative and provided more than adequate support. Their record of accomplishment certainly speaks for that. Of course CARE bought CORDECH a US$100,000 drill rig with a fully equipped support truck and several additional vehicles. CORDECH has also collaborated with Saneamiento Ambiental on occasions to help them utilize their UNICEF funds. Last year they built 125 latrines, four septic systems and four hand dug wells at various schools, community centers and health posts.

AT INITIATIVE:The planning department headed by Ing. Edmundo Zelada was interested in the possibilities of recycling and composting of Sucre's solid wastes. The idea was dropped after preliminary investigation for lack of adequate technical information and qualified or knowledgeable personnel. They have a very impressive reforestation program with several tree nurseries where they raise several species of native trees as well as eucalyptus.

COMMENTS:

For the most part CORDECH focuses on high technology and high capital investment projects. However, their projects have been primarily financed by petroleum revenues which have begun to decline rapidly. They might utilize appropriate technologies if they had adequate information and funds were made available.

Sector	
AGRICULTURE	[ ]
SMALL SCALE INDUSTRY/ARTISANRY	[ ]
WATER & SANITATION	[X]
ENERGY	[ ]

AT Initiative	Present	Potential
Research	[ ]	[ ]
T/A Demonstration	[ ]	[ ]
Manufacture/Construction	[X]	[X]
Dissemination/Training	[ ]	[ ]

NAME: CORPORACIÓN DE DESARROLLO DE TARIJA (CODETAR--Department Development Corporation of Tarija)

MAILING ADDRESS: Casilla 1369
Tarija, Bolivia

OFFICE ADDRESS: Avenida La Américas, esq. España
Tarija, Bolivia

PHONES: 3343, 3344, 3345, 3346, 3347

CONTACT: Ing. Imel Copa, Director of Water Supply and Sanitation Program

SPECIAL PROGRAMS-Water and Sanitation: Ing. Imel Copa is a Sanitary Engineer in charge of water supply and sanitation for CODETAR. He has the support of two part time two civil engineers a full time survey crew, three construction supervisors and a driver with vehicle. They are beginning their second year of a contract with CARE to build small water systems for communities between 200 and 2,000 population. They have completed five systems; five more are designed an additional ten are under study. CARE provides the promotion, design review and construction materials. CODETAR does the survey and preliminary design and provides transportation of materials and construction supervision. The relationship between CARE and CODETAR is not smooth at this time due to some personality clashes and some jealous rivalries between CODETAR and CORDECH and their respective relationships with CARE. CODETAR has been requesting more and more equipment from CARE which in turn demands more action and support out of CODETAR.

One aspect of Imel Copa's department made a strong impression on the team member Kroschel. He had organized a meeting between his department, Saneamiento Ambiental and the Servico Nacional de Desarrollo de Comunidades to try to coordinate their activities in water supply projects and develop a plan of collaboration. This attempt at coordination is a monumental step for Bolivia--absolutely unheard of. An impression of intradepartmental rivalries and back biting was prevalent in most interviews with different agencies.

AT INITIATIVE-Water and Sanitation: Ing. Copa lacked information. He was not aware of the many intermediate sanitation options although he had heard of using sewage sludge for fertilizer. His main interest was gang septic systems or Imhoff tanks. He was very interested in the low water toilets being manufactured in Colombia. He did not think much of latrines or privies of any kind. He felt that water seal toilets were only viable sanitary technology. He considered water supply a priority over sanitation -- a widely held view -- and that water seal toilets followed naturally after individual water supply was secured. He was very interested in the prospect of workshops or seminars on waste management technology. He was admitedly ignorant of the alternatives and wanted to have all the available data and knowledge to use it.

COMMENTS:

CODETAR definitely has the potential to design, coordinate, and implement appropriate technologies in water supply and sanitation projects. What they lack is information on the options. They need information in Spanish (Copa does not read English), especially about AT projects from within the Latin world such as the low water toilets from Colombia or municipal compost project in Mexico. It is important that they be able to identify with projects culturally so they do not regard AT as a second class technology handed down to the Third World from the patronizing Big Brother of the North.

GOVERNMENT OF BOLIVIA

PREFECT LEVEL INSTITUTIONS

INSTITUTIONS SURVEYED:

DEPARTMENTO DE MICRO-RIEGO

PREFECTURA DE COCHABAMBA

Sector	
AGRICULTURE	[X]
SMALL SCALE INDUSTRY/ARTISANRY	[ ]
WATER & SANITATION	[ ]
ENERGY	[X]

AT Initiative	Present	Potential
Research	[ ]	[ ]
T/A Demonstration	[ ]	[X]
Manufacture/Construction	[ ]	[X]
Dissemination/Training	[ ]	[ ]

NAME: DEPARTAMENTO DE MICRO-RIEGO, PREFECTURA DE COCHAHAMBA (Department of Micro Irrigation Projects, Office of the Prefect of Cochabamba)

OFFICE ADDRESS: Cochabamba, Bolivia

CONTACT: Ing. Serafin Castellón, Chief

INSTITUTIONAL SUMMARY: This department is financed by receiving 18% of the tax collected from chicha (local alcoholic drink made from corn) within the Department of Cochabamba. Since 1963, when this collection for irrigation projects started, 18% of the tax has yielded about b$ 1,000,000/year. While the amount has remained equal, inflation has reduced its effectiveness. The budget of the department, including campesino labor and contributions is about b$ 2,000,000 annually.

STAFF AND ORGANIZATION: The Department operates independently of any federal government authority. It has a board of directors which includes a representative of the prefect, alcalde, local armed forces, Federation of Campesinos and the Departmental controller. The Department has 8 employees, of which 2 are professionals.

SPECIAL PROGRAMS: Campesinos present their request to the department. They have to come in groups of at least 20. Then a commission evaluates the project and the department makes a feasibility study. After that, plans are prepared and agreements with the compesinos are made about financing and labor distribution. The department gives about 50% financing. The rest comes from the beneficiaries, i.e. the campesinos who contribute labor, basic materials and often also cash, especially for well drilling.

Projects are generally small irrigation projects, wells for irrigation and/or drinking water, small dams, soil conservation, river bank protection, small systems for drinking water, especially cement rings for wells and handpumps. Well drilling is contracted out. The department also helps in flood problems, often on an emergency basis.

COMMENTS:

The Department of Micro-Irrigation Projects of Cochabamba is another group, which would probably benefit greatly from AT, especially hand pumps, micro levelling of

irrigation plots, simple drinking water schemes, and, probably, simple sanitation schemes.

Based on conversation with its Chief, small grants would increase the department's effectiveness. Ing. Castellon was very interested in VITA publications and requested its publication list.

EDUCATIONAL INSTITUTIONS

EDUCATIONAL INSTITUTIONS SURVEYED:

UNIVERSIDAD MAYOR DE SAN ANDRES

- INSTITUTO DE INVESTIGACIONES FISICAS
- INSTITUTO DE INGENIERIA SANITARIA

LABORATORIO DE SISMOLOGIA SAN CALIXTO

INSTITUTO NACIONAL TECNOLOGICO PEDRO DOMINGO MURILLO

UNIVERSIDAD AUTONOMA GABRIEL RENE MORENO

INSTITUTO DE APRENDIZAJE INDUSTRIAL

UNIVERSIDAD MAYOR DE SAN SIMON, FACULTAD DE AGRICULTURA

- EXTENSION UNIVERSITARIA
- CENTRO DE INVESTIGACION, FORMACION Y EXTENSION EN MECANIZACION AGRICOLA (CIFEMA)

PROYECTO AGROBIOLOGIA COCHABAMBA - see International Organization

INSTITUTO TECNOLOGICO TUPURAYA

Sector	
AGRICULTURE	[ ]
SMALL SCALE INDUSTRY/ARTISANRY	[ ]
WATER & SANITATION	[X]
ENERGY	[X]

AT Initiative	Present	Potential
Research	[ ]	[ ]
T/A Demonstration	[ ]	[ ]
Manufacture/Construction	[ ]	[ ]
Dissemination/Training	[ ]	[ ]

NAME: UNIVERSIDAD MAYOR DE SAN ANDRES -- San Andres University

OFFICE ADDRESS: Av. Villazon
La Paz, Bolivia

PHONE: 785088, 785135, 361343

CONTACT: Dr. Andres Trepp, Professor (Expert, Institutos de Investigaciones Fisicas)
Ing. Raul Bascon, Professor

SPECIAL PROGRAMS: INSTITUTO DE INVESTIGACIÓNES FISICAS*
INSTITUTO DE INGENIERIA SANITARIA*

*See Institution reports, below.

Sector	
AGRICULTURE	[ ]
SMALL SCALE INDUSTRY/ARTISANRY	[ ]
WATER & SANITATION	[ ]
ENERGY	[x]

AT Initiative	Present	Potential
Research	[x]	[ ]
T/A Demonstration	[ ]	[ ]
Manufacture/Construction	[ ]	[ ]
Dissemination/Training	[x]	[ ]

NAME: INSTITUTO DE INVESTIGACIONES FISICAS--(Institute for the Study of Physics)

OFFICE ADDRESS: Universidad Mayor de San Andres
Av. Villazon
La Paz, Bolivia

PHONE: 785088, 785135

CONTACT: Dr. Andres Trepp, Professor

INSTITUTIONAL SUMMARY: The Institute has been involved in solar energy research since the 1960s.

Four persons--one physicist, two engineers and one technician--work full time on solar energy, except for teaching obligations. They are acting consultants for the World Bank/Government of Bolivia Ulla Ulla Project in the Altiplano. They maintain a workshop both in the project area and at the University.

AT INITIATIVE: They are currently measuring global solar radiation. Dr. Trepp has built a solar water heater of a passive design which will soon be marketed under the name COMBOL.

They have built a solar furnace for mineral analysis (see Energy Sector AT Inventory for details). A domestic and industrial group is also interested in water heating (see Energy Sector AT Inventory), space heating and mineral drying. They have done little with grain dryers although one has been designed for the Ulla Ulla Project. They also have a prototype plastic greenhouse (see Agriculture Sector AT Inventory for details). The possibility of drying meat through solar radiation is being considered. If more funds were available, this group would study the quality of solar rays, especially the ultraviolet radiation in the Altiplano.

SPECIAL PROGRAMS: The World Bank has allotted US$150,000 to them for solar energy work for a five year period, to be used for equipment, construction energy work for a five year period, to be used for equipment, construction materials and the workshop. The GOB is financing an additional US$125,000 for salaries during the same period. The University itself is financed through a special tax.

COMMENTS:

The Institute has a fully developed scientific research capability and can draw on the technical faculty and staff of the University. Given the level of information and facilities at their disposal and the relatively small amount of solar hardware they have in place, it is quite doubtful in Blake's estimation that this group can be effective in helping to implement simple energy technologies in rural areas. Their potential lies in research and the development of prototypes for demonstration.

Sector	
AGRICULTURE	[ ]
SMALL SCALE INDUSTRY/ARTISANRY	[ ]
WATER & SANITATION	[X]
ENERGY	[ ]

AT Initiative	Present	Potential
Research	[ ]	[ ]
T/A Demonstration	[ ]	[ ]
Manufacture/Construction	[ ]	[ ]
Dissemination/Training	[X]	[ ]

NAME: INSTITUTO DE INGENIERIA SANITARIA -- (Institute of Sanitary Engineering)

OFFICE ADDRESS: Universidad Mayor de San Andres
Av. Villazon
La Paz, Bolivia

PHONE: 361343

CONTACT: Ing. Raul Bascon

INSTITUTIONAL SUMMARY: The Institute offers a five year program in sanitary engineering, which includes courses in:

- Potable water supply
- Sewer design
- Water treatment plant design
- Sewage treatment plant design
- Chemistry and microbiology
- Environmental sanitation
- Environmental ecology

The program is soon to be expanded to six years. Course work is based on United States and European standard engineering practices. Latrines and septic tanks are the only rural sanitation options covered in the environmental sanitation course. Environmental Ecology was only recently included as part of the course. The bulk of the course work and design problems focus on water treatment plants, sewerage and sewage treatment plants.

Ing. Bascon emphasizes that he trains professionals to work in the modern sector. He compares the program to a Masters of Engineering program in the United States. In the seven years of the program there have been thirty graduates, over half of whom have left the country to find work. When asked why his program did not address the needs of the majority of Bolivians, he replied that sanitation was not a major problem in the countryside, that they just needed water supplies. He felt their technological knowledge was sufficient and that they just lack the funds. They have no reserach programs addressing rural problems.

COMMENTS:

Bascon had no detailed knowledge of the Project INGAVI hand pump or well system but expressed disatisfaction with the program in general . He also held the Departmento de Saneamiento Ambiental in very low esteem and said his graduates would not even work for them, that only civil engineers from the provincial universities would take DSA positions. He was apparently in a row with DSA over some recommendations he had made about raising the standards for water labs around the country.

In general, Ing. Bascon demonstrated a lack of understanding of the problems and conditions of the rural environment. Ing. Bascon and his class represent part of the problem of rural sanitation rather than part of its solution.

Sector	
AGRICULTURE	[ ]
SMALL SCALE INDUSTRY/ARTISANRY	[ ]
WATER & SANITATION	[ ]
ENERGY	[X]

AT Initiative	Present	Potential
Research	[X]	[ ]
T/A Demonstration	[ ]	[ ]
Manufacture/Construction	[ ]	[ ]
Dissemination/Training	[ ]	[ ]

NAME: LABORATORIO DE SISMOLOGIA SAN CALIXTO--(San Calixto Seismology Laboratory)

MAILING ADDRESS: Casilla 5933/5939
La Paz, Bolivia

OFFICE ADDRESS: Indaburu 944
La Paz, Bolivia

PHONE: 356098

CONTACT: Dr. Ramón Cabré, Director

INSTITUTIONAL SUMMARY: San Calixto was founded as a school in 1880 and began meteorological and seismological observations in 1973. Teaching is no longer done seismological observation is its main activity. While originally established by the United States Geological Survey, the French later added installations in the lower parts of the valley. San Calixto receives some assistance from the Bolivian National Academy of Sciences. Much of its funding comes from the United States Geological Service. Some of its equipment is locally built.

San Calixto has collected and published data on solar radiation. It has problems in maintaining its equipment in the field. Its data on solar radiation is more complete than that of the Dirección Nacional de Meteorologia e Hidrologia (DNMH), which collects data only for hours of sunshine.

San Calixto sources reported that earth tremors in Cochabamba reach seven on the Mercali Scale. Sucre suffered very destructive earthquakes in 1650 and 1948. Numerous earthquakes occur in southwestern Bolivia, a sparsely settled region.

STAFF: A total of fourteen people including four engineers comprise the full-time staff. Some University students are trained as well. Dr. Cabre is a member of the Bolivian National Academy of Sciences.

AT INITIATIVE-Energy: San Calixto is currently cooperating with the Bolivian National Academy of Sciences to design and build a solar thermal pump. In the past they built a wind electric system using an automobile alternator. This system was installed at

Peñas, and had many problems before it was abandoned. They have also built some attachments to their computer.

COMMENTS:

As primarily a research institute, it is doubtful this group would become involved directly in the implementation of simple energy technologies in rural areas. However, Dr. Cabré is very well respected and should prove to be a valuable contact. He has expressed interest in collaborating with VITA.

Sector	
AGRICULTURE	[ ]
SMALL SCALE INDUSTRY/ARTISANRY	[ ]
WATER & SANITATION	[ ]
ENERGY	[ ]

AT Initiative	Present	Potential
Research	[ ]	[ ]
T/A Demonstration	[ ]	[ ]
Manufacture/Construction	[ ]	[ ]
Dissemination/Training	[X]	[ ]

NAME: INSTITUTO NACIONAL TECNOLOGICO PEDRO DOMINGO MURILLO*
(Pedro Domingo Murillo National Vocational Institute)

OFFICE ADDRESS: Calle Chacalltaya
La Paz, Bolivia

INSTITUTIONAL SUMMARY: About 800 students receive technical training. About half are in mechanical fields. Approximately seventy-five graduate each year in those fields.

Training is for two to four years, depending on whether students take the basic curriculum or the advanced. If the advanced course is completed, a student can obtain an engineering degree at the University with three additional years of study. Some FOMO-like short courses are also offered. Costs per student are estimated at US$3,500 for the four year course.

*Not visited

Sector	
AGRICULTURE	[X]
SMALL SCALE INDUSTRY/ARTISANRY	[ ]
WATER & SANITATION	[ ]
ENERGY	[ ]

AT Initiative	Present	Potential
Research	[X]	[ ]
T/A Demonstration	[X]	[ ]
Manufacture/Construction	[ ]	[ ]
Dissemination/Training	[X]	[ ]

NAME: UNIVERSIDAD AUTONOMA GABRIEL RENE MORENO (Gabriel Rene Moreno University)

MAILING ADDRESS: Ciudad Universitaria
Santa Cruz, Bolivia

CONTACT: Dr. Daniel Candía, Vice-Rector
Ing. Perez, Dean, Faculty of Agriculture
Ing. Angel Cardeiro, Professor
Franklin Prada, Student Leader
Willy Furtado, Student Leader

INSTITUTIONAL SUMMARY: The University has been in existence for 100 years (Santa Cruz City University for more than 300). At present there are 205 students in agriculture, with twenty agricultural engineers graduating each year. Unfortunately, very few of these graduates end up in field work. Most find jobs in CORDECRUZ, MACA, or CIAT. The University gives the agricultural engineering (Ing. Agr.) degree after a minimum of nine semesters and a thesis. The following majors are offered: Agricultural Production (crop production), Agricultural Engineering, Plant Sciences, Natural Resources, Rural Development and Animal Production.

In addition, for sub-professional careers, the University offers a three year program in Agronomy or Animal Production leading to the title, "Tecnico Superior" and a two year program leading to the "Perito" (expert) title in Agronomy, General Agriculture or Cattle Husbandry.

A newly-instituted requirement is that all students work in the field with small farmers for six months (one growing season) in order to graduate. Generally the University feels that it should branch into more extension and help the small farmer. It feels that CIAT does not have nearly enough extension agents. Professors back up those students who work in the field.

The total budget of the Faculty of Agriculture is US$50-60,000. A soils laboratory and other equipment was recently obtained from USAID.

STAFF: The faculty has twenty professors at the moment, of whom ten are full-time. Five United States trained professors have a M. Sc. in these specialties: Soils, Plant Pathology, Tropical Agriculture, Forestry, Weed control and Irrigation. There are some other United States-trained personnel teaching short courses. Dr. Candia

is a Cornell graduate.

COMMENTS:

The Faculty seems to have good intentions, but its effectiveness is questionable. A teaching laboratory with microscopes was ready for use; however, most of the equipment for the soils laboratory was still in the original container in which it arrived. A visit offered to the University's experimental farm never materialized for an unexplained reason.

Sector	
AGRICULTURE	[ ]
SMALL SCALE INDUSTRY/ARTISANRY	[ ]
WATER & SANITATION	[ ]
ENERGY	[X]

AT Initiative	Present	Potential
Research	[X]	[ ]
T/A Demonstration	[ ]	[ ]
Manufacture/Construction	[X]	[ ]
Dissemination/Training	[X]	[ ]

NAME: INSTITUTO DE APRENDIZAJE INDUSTRIAL (Institute of Industrial Training)

MAILING ADDRESS: Casilla 603

OFFICE ADDRESS: Av. Arce s/n entre Arica e Iquique
Oruro, Bolivia

PHONE: 53186

CONTACT: Ignacio Sunol, Director

INSTITUTIONAL SUMMARY: Instituto de Aprendizaje Industrial is a Jesuit run technical training school which has been in operation for eleven years. The Institute has 120 students and offers three year programs in machine shop, electrical and automobile training. Funding is provided by the Jesuits, by student tuitions, and by services provided to the community.

STAFF: The Institute has twenty professors.

AT INITIATIVE-Energy: The Instituto has built two Savonius rotor water pumps which are located in Tijllakana and La Brecha. These are reported to have been operating successfully. A solar thermal freon loop water pump is being designed by Professor Francisco Dias who plans to begin constructing it soon.

COMMENTS:

The Instituto could easily build and implement technologies under the Small Projects Program, and should be allowed to build them in-house rather than subcontracting to a local craftsman.

Sector	
AGRICULTURE	[x]
SMALL SCALE INDUSTRY/ARTISANRY	[ ]
WATER & SANITATION	[ ]
ENERGY	[ ]

AT Initiative	Present	Potential
Research	[x]	[x]
T/A Demonstration	[ ]	[ ]
Manufacture/Construction	[ ]	[ ]
Dissemination/Training	[x]	[x]

NAME: UNIVERSIDAD MAYOR DE SAN SIMON, FACULDAD DE AGRICULTURA (San Simon University, Faculty of Agriculture)

OFFICE ADDRESS: Cochabamba, Bolivia

CONTACTS: Ing. Alejandro Vargas, Dean
Ing. Raul Rico, Head Department of Engineering, Soils and Irrigations

INSTITUTIONAL SUMMARY: There are 600 students enrolled. The faculty grants two degrees Agricultural Engineer (Ing. Agr.) after five years study and thesis, and Tecnico Medio, after three years of study. About 160 students of the 600 are in the Tecnico Medio program. Each six months about twenty students in each group graduate, e.g. twenty Ing. Agr. and twenty Tecnicos Medios. Many leave as "Egresados" when they finish their course work, and go to work hoping to finish their thesis work for the agricultural engineering.

The Faculty has 120 ha of farmland, but lacks funds to develop it properly.

The Faculty is revising its program to give students more field work, especially those taking the three year course. Since 1979, students have a study/field extension program. To be accepted by the faculty, students need a B average in secondary school and have to take a three to four month preparatory course. This is the same for the Ing. Agr. and Tecnico Medio programs.

The soil and water laboratory does research and service work. They plan to add a hydraulics laboratory. The Kellogg Foundation may give the faculty some assistance for extension work in the soya and nutrition program. (There is an AID funded soya introduction and nutritional research program at the Medical Faculty of San Simon, which collaborates with the Department of Nutrition at the University of North Carolina, United States. The Faculty has the following departments:

- Agricultural Engineering, Soils and Irrigation
- Plant Science (Botany, Plant Breeding, Genetics)
- Animal Sciences
- Rural Development
- Food Technology
- Agronomy (Crop production)

STAFF: The Faculty has 40 professors of which 20 are full-time.

SPECIAL PROGRAMS: See related institutional reports which follow for the Extension

COMMENTS:

The Faculty in Cochabamba is the main academic agricultural faculty in Bolivia. Others are in Santa Cruz and Tarija. The latter is mainly interested in forestry. There are more, but they are weaker than these. As is common in Latin American agricultural Faculties, the Faculty in Cochabamba seems very low on funds.

Sector	
AGRICULTURE	[x]
SMALL SCALE INDUSTRY/ARTISANRY	[x]
WATER & SANITATION	[x]
ENERGY	[ ]

AT Initiative	Present	Potential
Research	[ ]	[x]
T/A Demonstration	[ ]	[ ]
Manufacture/Construction	[ ]	[ ]
Dissemination/Training	[x]	[x]

NAME: UNIVERSIDAD MAYOR DE SAN SIMÓN - EXTENSION UNIVERSITARIA -- (Extension Service of the University of San Simon)

MAILING ADDRESS: Casilla 992
Cochabamba, Bolivia

CONTACT: Dr. Alfónso Camacho Peña, Director

INSTITUTIONAL SUMMARY:: Extension services of the university are in these fields: cultural, social, editorial programs. The social service is part of the curriculum and works very well, especially in its medical aspects, where it truly reaches the poor people in the community. Pure science and technical departments help small communities to establish water and sewage systems (latrines). The architecture department helps small communities to obtain improved housing. The social sciences so far have contributed almost nothing to extension programs, neither has agriculture. The Kellogg Foundation has offered some financing for agricultural extension programs by the University, but so far nothing has been received.

SPECIAL PROGRAMS: The Extension service has conducted some training courses for craft and technical workers: 500 electricians, 200 automobile mechanics and an unspecified number of craftsmen in "miga de pan" (bread figures) and ceramics. These crafts are new in Bolivia and are taught by a professor from Lima.

It has arranged post graduate course for teachers in secondary schools, i.e. a course above the "Normal School" level for teachers, so they can obtain the Title of "Professor" in secondary schools.

The Extension service has cooperated with CIFEMA in a tractor driver course for 25 participants, and is planning short courses in cooperation with CIFEMA in response to requests by campesino organizations.

COMMENTS:

The Director seems a capable and energetic person who is very interested in expanding the activities of the university Extension Service. Funds seem to be very limited. He would no doubt be glad to arrange for AT short courses, if financing were available. His office might also be suitable to participate in the supervision of the suggested village blacksmith program discussed elsewhere in this report.

Sector	
AGRICULTURE	[X]
SMALL SCALE INDUSTRY/ARTISANRY	[X]
WATER & SANITATION	[X]
ENERGY	[X]

AT Initiative	Present	Potential
Research	[X]	[X]
T/A Demonstration	[X]	[X]
Manufacture/Construction	[X]	[X]
Dissemination/Training	[X]	[X]

NAME: CENTRO DE INVESTIGACIÓN, FORMACION Y EXTENSION EN MECANIZACION AGRICOLA (CIFEMA - Center for Research, Training and Extension in Agricultural Mechanization)

MAILING ADDRESS: Casilla 831
Cochabamba, Bolivia

OFFICE ADDRESS: Kilometro 4, Carretera a Santa Cruz
Cochahamba, Bolivia

PHONE: 25515

CONTACTS: Ing. Agr. Hans Meir, Co-Director, COTESU - CIFEMA
Ing. Agr. Jaime Mendoza, Co-Director, UMSS - CIFEMA
Peter Tschanz, COTESU

INSTITUTIONAL SUMMARY: CIFEMA is a project of the Faculty of Agriculture of the Universidad Mayor de San Simon and the Technical Cooperation Department of the Swiss Government (COTESU).

The faculty gave CIFEMA two hectares of land, which contained the buildings previously used for an intermediate technicians program. Classrooms at CIFEMA are sufficient to seat about 50 students at one time. There is an office, a small electrical laboratory, a small drafting room, a carpenter shop, mechanics shop including two lathes, a forge, a truck shed, a machinery shed, students dormitory, a dining hall and a residence of the project manager.

AT INITIATIVE: Agriculture --CIFEMA operates a training school in Appropriate Technology with an emphasis on animal traction and its related equipment. They stress blacksmithing and metal working skills needed to operate a rural workshop, to fabricate and to repair basic farm machinery. CIFEMA offers the following courses:

- A one year comprehensive course to train agricultural mechanics, village blacksmiths and others in a variety of skills
- A one month course of tractor drivers in tractor operation and basic maintenance

- A two week short course in blacksmithing for metal workers
- A one semester, three to five hour a week elective course for students of the San Simon School of Agriculture entitled "Mecanizacion Agricola"

Course content is discussed in the AT/Agriculture Sector, AT Inventory.

COMMENTS:

This project is rather new, but seems to function very well. It is supported by Swiss Government funds, and Swiss-Bolivian agreements are always for the duration of 2 years. However, it is expected that the agreement for CIFEMA will be renewed many times until it is felt that it really has made an impact. Ing. Meir and Ing. Mendoza are Co-Directors of the project and seem to work very well together, although it is obvious that the technical input comes from the Swiss side. CIFEMA's relation with the faculty seems excellent, and Ing. Meir has also been named professor in the faculty.

The idea of developing an AT center for agriculture jointly with CIFEMA and the Faculty of Agriculture in Cochabamba and the developing of village blacksmith shops have been discussed with CIFEMA, in some detail. CIFEMA contributed a list of equipment and estimated the cost for setting up a village blacksmith shop/farm machinery repair installation, which is discussed in greater detail in Appendix .

CIFEMA tries to cover the whole range of farm machinery, from the most modern employed in Bolivia to more simple ones for campesinos. They have a general interest in AT, and probably have done as much AT research and development as anyone in Bolivia, producing prototypes in their shops at "La Tamborada".

The impressive aspect of all CIFEMA projects is that the prototypes developed were intended to be used; they were not just display models. A solar water heater was connected to the dormitory shower. The traction meter was to be used in the development of a more efficient harness and the pump for irrigation. They were excellent examples of appropriate technology made from locally available materials with local tools and skills to meet their needs.

Sector	
AGRICULTURE	[ ]
SMALL SCALE INDUSTRY/ARTISANRY	[X]
WATER & SANITATION	[ ]
ENERGY	[ ]

AT Initiative	Present	Potential
Research	[ ]	[ ]
T/A Demonstration	[ ]	[ ]
Manufacture/Construction	[ ]	[ ]
Dissemination/Training	[X]	[X]

NAME: INSTITUTO TECNOLOGICO TUPURAYA -- (Tupuraya Technological Institute)*

ADDRESS: Cochabamba, Bolivia

INSTITUTIONAL SUMMARY: This institution was founded and, until recently, run with Dutch Government assistance. It now faces financial and technical problems with the termination of Dutch assistance. It has about 250 students, who follow a four year course in mechanics or carpentry.

During the first year, students have to decide whether they prefer to learn some metal working branch, such as blacksmithing, lathe work or welding, or carpentry. Attendance is full-time. Each year there are twenty to twenty-two graduates in metal working specialties. Instructions are very good in a practical and theoretical basis.

The Institute feels that its graduates should move into industrial positions at middle management level. Costs per student per year have been estimated at US$600, including staff expenses and depreciation of equipment.

COMMENTS:

While some of the graduates might be able and interested in working in AT, the Institution's purpose is to provide personnel for the industrial sector.

*Not visited

BOLIVIAN PRIVATE NON-PROFIT ORGANIZATIONS

BOLIVIAN PRIVATE NON-PROFIT ORGANIZATIONS SURVEYED:

ACADEMIA NACIONAL DE CIENCIAS DE BOLIVIA (ANC)

EL CENTRO PARA EL DESARROLLO SOCIAL Y ECONOMICO (DESEC)

Sector	
AGRICULTURE	[ ]
SMALL SCALE INDUSTRY/ARTISANRY	[ ]
WATER & SANITATION	[ ]
ENERGY	[x]

AT Initiative	Present	Potential
Research	[x]	[x]
T/A Demonstration	[ ]	[ ]
Manufacture/Construction	[ ]	[ ]
Dissemination/Training	[ ]	[ ]

NAME: ACADEMIA NACIONAL DE CIENCIAS DE BOLIVIA (ANC--Bolivian National Academy of Sciences,

MAILING ADDRESS: Casilla 5829
La Paz, Bolivia

OFFICE ADDRESS: Av. 16 de Julio (El Prado) 1732
La Paz, Bolivia

PHONE: 368990

CONTACT: Ing. Gaston N. Mejia, Executive Secretary

INSTITUTIONAL SUMMARY: The Bolivian National Academy of Sciences is an open membership, non-profit organization, which in late 1979 had sixty associates and thirty-two appointed directors. There are three types of membership in the academy:

- Academic Level: 32 members in 1979
- Council Level: over 100 scientists in 1979
- Associate Membership: Open to any person interested in the sciences

By its nature, the Academy is closely affiliated with various scientific organizations throughout Bolivia and has provided assistance to numerous energy related projects of the Instituto San Calixto, the Instituto de Fisicas, and others.

The Academy supports research activities with small grants, generally in the range of US$3-4,000. Research activities supported include various projects in human genetics, solar energy, organic chemistry, history and art. The ANC will also assist the cost of publishing research papers.

The 1979 budget was b$2,000,000 (=US$100,000) per year. Funds came from the Government of Bolivia and, to a smaller extent, from local industry.

COMMENTS:

The ANC is short of funds. However, they could be a possible vehicle to channel small grants for AT research. This group would be effective in implementing AT technologies in rural areas.

Sector	
AGRICULTURE	[x]
SMALL SCALE INDUSTRY/ARTISANRY	[x]
WATER & SANITATION	[x]
ENERGY	[x]

AT Initiative	Present	Potential
Research	[ ]	[ ]
T/A Demonstration	[x]	[x]
Manufacture/Construction	[x]	[x]
Dissemination/Training	[x]	[x]

NAME: EL CENTRO PARA EL DESARROLLO SOCIAL Y ECONOMICO (DESEC--Center for Social and Economic Development)

MAILING ADDRESS:	DESEC-Cochabamba Casilla 1420 Cochabamba, Bolivia	DESEC-Santa Cruz Casilla 880 Santa Cruz, Bolivia	DESEC-La Paz Casilla 469 La Paz, Bolivia
OFFICE ADDRESS:	Junin S-142, 3° piso Cochabamba	Av. Las Americas 36 Santa Cruz	Av. Camacho 1333 La Paz
PHONE:	21201	26086	327445

CONTACTS: Eracho Chavez, Controller Chavez, DESEC (Cochabamba)
Carlos Quinton, Chief, Agricultural Department (Santa Cruz)

INSTITUTIONAL SUMMARY: DESEC is a private, non-profit development institution founded in 1963 and recognized under Bolivian law in 1966. DESEC is a group or "circuit" of five decentralized, semi-autonomous agencies. A Table of Organization is shown in Figure VII- . DESEC proper acts as the coordinator of the "circuit". DESEC channels funds to programs and evaluates the four sister organizations. It provides a networking function to grass roots campesino organizations like ACCION RURAL AGRICOLA DE DESARROLLO ORGANIZADO, (ARADO) and uses them as an avenue to deliver information and services to rural campesinos. DESEC publishes a bimonthly newsletter, AYNI, and produces educational materials (e.g. filmstrips). Each of the four sister organizations has a different focus and its own programs:

SERVICIO POPULAR DE SALUD (SEPSA - People's Health Service) operates a medical clinic, San Lucas, in a suburb of Cochabamba for the local population. Its services are available to rural campesino groups. SEPSA is staffed by three physicians and three para-professional health workers (auxiliaries).

ASSOCIACION DE VIVIENDA POPULAR (VIPO - Association for People's Housing) provides design assistance, does some studies on economic house construction, and coordinates credit for home improvement and construction through La Rural Ltda. (a housing credit Coop). VIPO has two architects on its staff.

INSTITUTO CAMPESINO DE EDUCACION (ICE - Campesino Training Institute) provides basic literacy training and other educational programs through CENTROS DE FORMACION CAMPESINA (Campesino Training Centers). Three educators staff ICE at the Cochabamba office.

ASOCIACION DE SERVICIOS ARTESANALES Y RURALES (ASAR - Association of Rural and Artisanal Services) provides technical agricultural assistance to agricultural cooperatives as well as aid in storage, processing and marketing of agricultural products. It provides assistance to AMERINDIA, an association of artisan cooperatives. In addition to technical and marketing assistance ASAR provides management assistance and training for accounting and credit transactions.

Rural Small Scale Industry/Artisan Sector Activities: ASAR delegates its responsibilities for rural handicraft production to a decentralized department, AMERINDIA. AMERINDIA maintains an autonomous administration. Its central headquarters are in Cochabamba and it maintains an agency in La Paz. For all practical purposes, AMERINDIA is strictly a commercial enterprise. The AMERINDIA suppliers are "organized" into "artisan committees" and receive raw materials, orientation or technical training, services which are indistinguishable from those provided by the profit sector.

The exact number of committees and their membership is unclear due to fluctuations and the uncertain control which AMERINDIA exercises over the committees. At last count, AMERINDIA claimed to have ten groups in the Cochabamba Valley and two groups in La Paz Department, and roughly 200 affiliated artisans.

AMERINDIA's sales volume for 1978 was around US$148,000. Through a US$500,000. Inter-American Development Bank loan to DESEC, AMERINDIA will receive funds to expand the number of artisan committees and its commercial activity.

Agricultural Activities: ASAR has regional offices in Cochabamba, Santa Cruz and La Paz. Personnel at the Cochabamba office include:

- 7 Agricultural Engineer, (1 in the central office)
- 7 Ing. Agr. (1 in the central Office, 4 in Altura, 1 each in Melga and Chapare)
- 1 Ing. (Manager)
- 1 Administrator-Accountant
- 1 Accountant for credits
- 1 Chief, Sales Department
- 5 Technical Assistants
- 2 Secretaries
- 7 Mechanics, drivers, bricklayers, etc.

ASAR receives funds for credits from Banco Central and private banks (Fondo de Refinanciamiento Agricola). ASAR pays 13% interest. If a campesino's credit is approved, ASAR distributes the input in accordance with a plan presented by a group of local members prepared with technical assistance from ASAR. ASAR has about b$4,000,000 available for credit in all areas. ASAR office expenses and overhead come to about b$2,000,000 which has been paid to date by the Interamerican Foundation of Washington, D.C. ASAR gives technical assistance to twenty-three campesino organizations. Its service scope in the last five years developed as follows:

YEAR	NUMBER OF FAMILIES	HECTARES
1974	221	40
1975	280	106
1976	302	181
1977	394	390
1978	515	398

In the Cochabamba area their program started in 1969 and concentrated mostly on improving potato production. ASAR works in the Provinces of Arami, Carrasco and Chapare. Besides assistance in potato production, they give assistance in cereal production and crop rotation.

The ASAR program in the Department of Cochabamba is concentrated in the "zona de altura," an area between km 80 and 126 on the Cochabamba-Santa Cruz highway in the provinces of Arami and Carrasco, and in Melga (Zacaba) between km 25 and 35 on the Cochabamba-Chapare highway. During 1979, ASAR assisted 500 families in the high altitude zone and about 100 families in the Chapare. Also, 150 families in the tropical Chapare around the villages of San Miguel and Valle Ibirza received technical assistance and credit supervision.

The work in the high altitude areas is largely with potatoes, where seed production is a promising business as MACA does not supply the needs. ASAR imports about 12-14 tons of Dutch seed and buys another 10 tons of seed from MACA. Imported potato seed costs about US$1/kg. The seed is then multiplied for 2 years, when it is sold to growers.

ASAR maintains a small demonstration farm at Rio 24 (Nueva Chapare) were they have bananas, citrus, rice and pasture. They also have 15 head of cattle, both for meat and milk. The demonstration farm also operates a small rice thresher and a corn thresher. Both are run with gasoline motors and are very popular with nearby growers. Rice is threshed, but sold by the farmer unhulled. Here ASAR carries out tests on forages, rice and corn.

In the Andean provinces of the Department of Santa Cruz, ASAR works in a program to improve cattle, forage, fruit and vegetable production.

In the north of Santa Cruz, ASAR conducts a farm machinery service especially for weeding and maintains supplies of agricultural inputs. They assist in credits and marketing. Cooperatives assisted by ASAR produce rice, corn, soya, cotton and cattle. Some of these cooperatives have organized themselves into "Empresas Comunitarias" (a cross between cooperative, kibbutz and colchok) with ASAR assistance.

Soil analyses are done by the CIAT Laboratory in Santa Cruz, but interpretation is done by ASAR. ASAR also cooperates with IBTA on some fertilizer field trials. Members of ASAR generally use more fertilizer than campesinos in general.

ASAR claims the crops it assists yield 50% more than the local average.

ASAR gives technical assistance to the cooperatives of ARADO, a federation of campesino cooperatives.

Members of ARADO receive credits through the local ARADO affiliate. Credit applications are first approved by the local, regional, then national board. All board members are campesinos. Loans approved are guaranteed by the local group jointly, which is backed by the regional and national group. Members may have to give land titles as collateral. However, none has ever been executed for default. About 2% of loans are late accounts, but until now, eventually all have been paid. Credit is supplied to growers in kind, i.e. seeds, pesticides, tractor planting services, fertilizer or technical assistance.

Water and Sanitation Activities: DESEC was not actively engaged in water supply or sanitation projects. DESEC did help coordinate community petitions for a water supply to appropriate organizations such as Saneamiento Ambiental or the Servicio Nacional de Desarrollo de la Comunidad. DESEC appears to be in an excellent position to disseminate information on Appropriate Technology to campesino communities through ASAR or through ICE.

COMMENTS:

General (Max L. Kroschel): DESEC has a reputation for unethical money management practices.* It would be unwise to have DESEC directly administer funds. Rather, DESEC could act as an intermediary with the managing agency and the campesino beneficiaries.

Rural Small Scale Industry/Artisan Sector (Wayne Frost): The recommendation for the AMERINDIA program of DESEC is the same as that for INBOPIA: get out of commerce and down to the business of development! The argument that such commercial enterprises are providing needed market outlets and better incomes for the artisans has no foundation.

Four years ago, during an inspection of Bolivia's artisan production centers, Wayne Frost interviewed artisans belonging to AMERINDIA artisan committees. At that time they were dissatisfied with services and incomes being provided. During the VITA survey, the same artisans were interviewed again. It was found that they had abandoned the AMERINDIA committees last year. They stated that their sales and incomes had increased after they abandoned AMERINDIA.

Any role that AMERINDIA might assume in an AT project must emphasize a learning role with sufficient incentives for AMERINDIA to replicate AT concepts and methodology in its artisan committees.

Agriculture (Harvey Newton): The ASAR program directed to small farmers appears to be a very active organization which effectively reaches and helps small farmers in the areas where they work. ASAR has an interest in AT and uses soft AT to improve agricultural practices. ASAR is particularly interested in grant funds to build local potato storage units at twenty-three population centers.

Water and Sanitation (Max L. Kroschel): Through ICE's relationship with the Centros de Formacion Campesina, ICE could potentially develop a basic health and hygiene course to introduce the concept of waste composting and its integration into agriculture as fertilizer. Information on individual water wells and pumps and designs for compost privies could be disseminated through the VIP design assistance program.

DESEC's major potential function in an AT program could be to inform campesino groups about programs for water supply and sanitation sponsored through government

agencies and to get the local groups together with the implementing agency.

Energy: DESEC and its dependencies might also play a role in introducing and demonstrating appropriate technology in energy.

*Note: Significantly, the Interamerican Foundation withdrew its support from DESEC in 1979.

Table VI-
Table of Organization DESEC

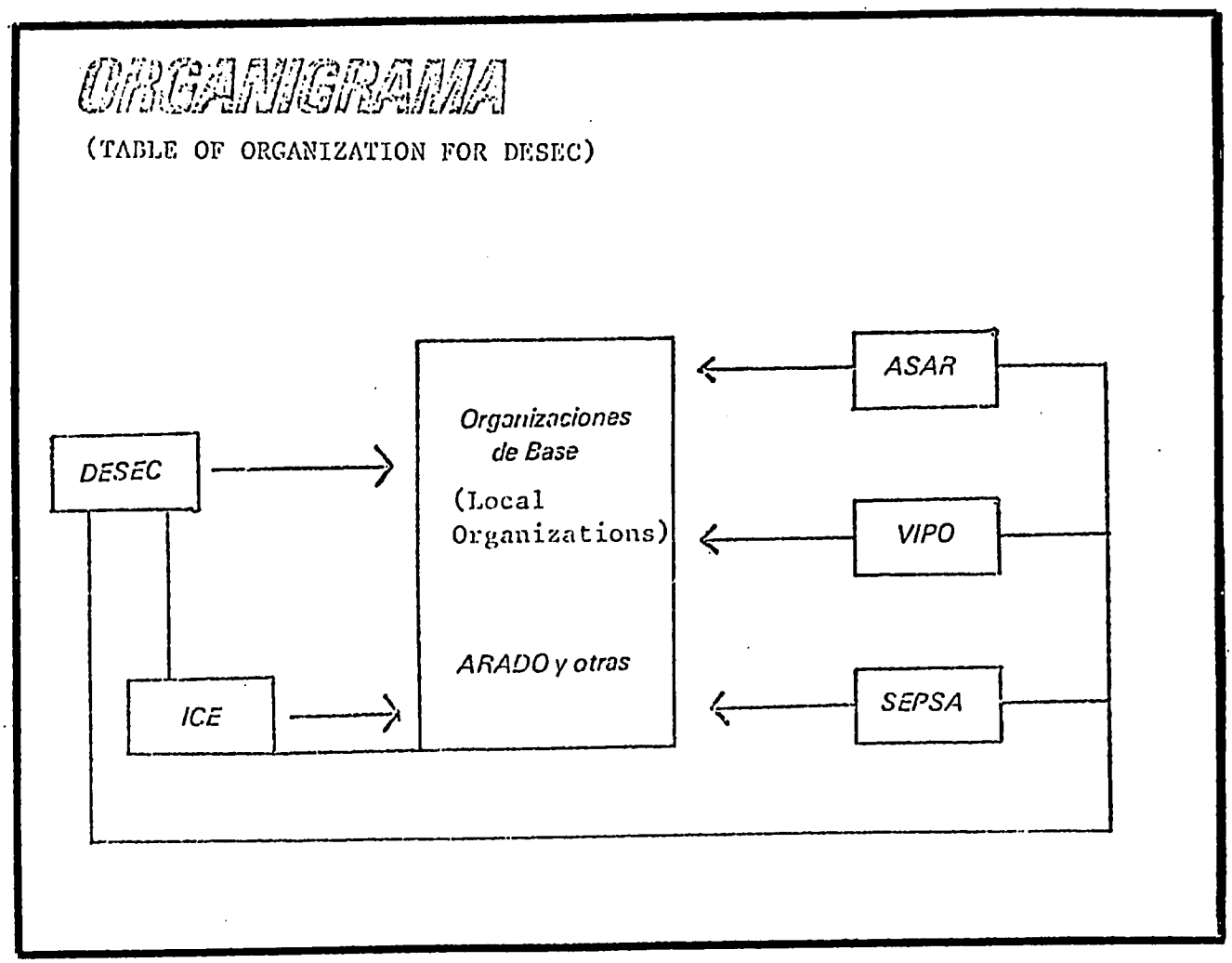

INTERNATIONAL ORGANIZATIONS

BOLIVIAN AFFILIATES OF INTERNATIONAL ORGANIZATIONS SURVEYED:

COMITE DE MUJERES INTERAMERICANAS (CIM)

INSTITUTO INTERAMERICANO DE CIENCIAS AGRICOLA (IICA)

UNITED NATIONS LIBRARY

AMERICAN INSTITUTE FOR FREE LABOR DEVELOPMENT (AIFLD)

COMITE DE COORDINACION Y PROMOCION DE TECNOLOGIA APROPRIADA (COCOP)

BANCO INTERAMERICANO DE DESARROLLO (BID)

BANCO MUNDIAL

CARE

INTERNATIONAL VOLUNTARY SERVICE (IVS)

PLAN DE PADRINOS

PROYECTO AGROBIOLOGIA COCHABAMBA

Sector	
AGRICULTURE	[ ]
SMALL SCALE INDUSTRY/ARTISANRY	[x]
WATER & SANITATION	[ ]
ENERGY	[ ]

AT Initiative	Present	Potential
Research	[ ]	[ ]
T/A Demonstration	[ ]	[x]
Manufacture/Construction	[ ]	[ ]
Dissemination/Training	[ ]	[x]

NAME: COMITÉ DE MUJERES INTERAMERICANAS (CIM--Consortium of Interamerican Women)

OFFICE ADDRESS: La Paz, Bolivia

CONTACTS: Gabriela Touchard, President
Lic. Yolanda M. Villalva
Bambi de Arelleno

INSTITUTIONAL SUMMARY: This group has been active in Bolivia and in rural industry concerns since at least 1974. It is a private international organization sponsored by the Organization of American States.

AT INITIATIVE: CIM is presently preparing to initiate a project in conjunction with the Ulla Ulla Project that has several AT components to it and has the potential of being an excellent rural AT project.

COMMENTS:

Its first wise decision was not to place its project at Ulla Ulla*, although it will remain under the general coordination of INFOL.

Much of the success of the CIM project will depend on the four field advisors to be contracted. The salaries being offered are low, which may reduce the options for top qualified advisors. As for the future role of CIM in any AT project, it is recommended that CIM establish close relationships with the international AT organizations.

CIM could be considered for any sub-projects.

* See Ulla Ulla Project report (above) Women's Participation Project under Special Programs.

Sector	
AGRICULTURE	[x]
SMALL SCALE INDUSTRY/ARTISANRY	[ ]
WATER & SANITATION	[ ]
ENERGY	[ ]

AT Initiative	Present	Potential
Research	[ ]	[x]
T/A Demonstration	[ ]	[ ]
Manufacture/Construction	[ ]	[ ]
Dissemination/Training	[ ]	[ ]

NAME: INSTITUTO INTERAMERICANO DE CIENCIAS AGRICOLAS (IICA--Inter-American Institute of Agricultural Sciences)

MAILING ADDRESS: B. Salinas 568
La Paz, Bolivia

CONTACT: Dr. Mario E. Tapia, Specialist in Andean crops

SPECIAL PROGRAMS: Dr. Tapia is in charge of a project assisting IBTA in the development of Andean crops and in the industrialization of quinua. IICA also assists IBTA in technology transfer projects, and assists the IBTA Agriculture Experiment Station at Belen and others in the Altiplano (Patacamaya).

Additional projects are assisting in the restructuring of MACA and the development of agricultural projects in the Tarija area.

IICA's annual budget is stated to be US$53,000.

STAFF: IICA has four professionals permanently in Bolivia, including the Country Director.

COMMENTS:

This is the local office of IICA, which is a specialized agency of the Organization of American States. Its central office is in San Jose, Costa Rica. The budget figure given above must be for project funds, exclusive of salaries. They are very interested in what could be termed software AT, i.e. the development of traditional Andean crops. Their processing involves other AT procedures, especially for the bitter quinua varieties discussed in the AT Inventory, Agriculture Sector, of this report.

Sector	
AGRICULTURE	[ ]
SMALL SCALE INDUSTRY/ARTISANRY	[ ]
WATER & SANITATION	[ ]
ENERGY	[ ]

AT Initiative	Present	Potential
Research	[ ]	[ ]
T/A Demonstration	[ ]	[ ]
Manufacture/Construction	[ ]	[ ]
Dissemination/Training	[X]	[X]

NAME: UNITED NATIONS LIBRARY

MAILING ADDRESS: Casilla 686
La Paz, Bolivia

OFFICE ADDRESS: Av. Arce 2529
La Paz, Bolivia

PHONE: 58589

COMMENTS:

Steve Blake reports that the United Nations Library is the most complete library on energy related topics concerning Bolivia that he found.

Sector	
AGRICULTURE	[x]
SMALL SCALE INDUSTRY/ARTISANRY	[x]
WATER & SANITATION	[ ]
ENERGY	[ ]

AT Initiative	Present	Potential
Research	[ ]	[ ]
T/A Demonstration	[ ]	[ ]
Manufacture/Construction	[ ]	[ ]
Dissemination/Training	[ ]	[x]

NAME: AMERICAN INSTITUTE FOR FREE LABOR DEVELOPMENT (AIFLD)

MAILING ADDRESS: Casilla 1420
La Paz, Bolivia

PHONE: 355363

CONTACT: Donald Kessler, Director (until December 1979)

INSTITUTIONAL SUMMARY: Set up in 1963, AIFLD conducts seminars at all levels and for all types of laborers and their families on subjects connected with unions. It also assists in general education courses at all levels and maintains mobile teaching teams which provide basic education in rural areas.

AIFLD also gives seminars to train leaders of rural cooperatives and federations of cooperatives such as FENCA, the national federation of rice cooperatives. While AIFLD emphasizes the teaching of organizational principals (how to run a meeting, etc.), promotion of AT information through the AIFLD networks can be considered as a dissemination channel.

Sector	
AGRICULTURE	[X]
SMALL SCALE INDUSTRY/ARTISANRY	[X]
WATER & SANITATION	[X]
ENERGY	[X]

AT Initiative	Present	Potential
Research	[ ]	[X]
T/A Demonstration	[ ]	[X]
Manufacture/Construction	[ ]	[X]
Dissemination/Training	[X]	[X]

NAME: COMITE DE COORDINACION Y PROMOCIÓN DE TECNOLOGIA APROPRIADA (COCOP--Committee for the Coordination and Advancement of Appropriate Technology)

MAILING ADDRESS: Casilla 20410
La Paz, Bolivia

OFFICE ADDRESS: Pisagua 700
La Paz, Bolivia

CONTACT: Ing. Agr. María Durand Sandoval, Executive Secretary
Jesús Durand, Director

INSTITUTIONAL SUMMARY: COCOP is a non-profit private voluntary umbrella organization founded in Costa Rica in April 1978. The Bolivian affiliate was organized in late 1978 with about fifty individual and group members. The Bolivian COCOP group functions as the regional coordinator for Peru and Ecuador. COCOP's goal is to facilitate the exchange of AT information among individuals and institutions working among low income groups.

STAFF AND ORGANIZATION: The 50 members of the Bolivian affiliate are volunteers; none receive pay for their work with COCOP, except the executive secretary who recently began to work on a full time basis. Individual volunteers include mechanical engineers, agronomists and sociologists. The majority of the members are Bolivians, though some are foreigners resident in Bolivia. COCOP functions as a federation of small scale development groups working throughout Bolivia, coordinating their activities.

AT INITIATIVE: COCOP has begun publication of a newsletter, EL CORREO: Boletin Informativo de Comite de Coordinación y Promoción de la Tecnologia Apropriada en Latino America. COCOP held a seminar of AT about a year ago entitled "Tecnologia Apropriada para Agricultura." This seminar was held jointly with the Union Nacional de Instituciones que Trabajan en Acción Social (UNITAS-National Union of Institutions Working in Social Action), a private, politically neutral organization, and CEBIAE, an educational organization which works in low income districts.

COCOP is planning to establish a data bank in AT.

COMMENTS:

This group seems to be motivated by enthusiasm and true interest. They have been operating until now on a shoe string budget out of a room in a lower income district in La Paz. Just how effective they are is hard to determine. No doubt a supply of AT publications and any small grant would increase their effectiveness. If their effectiveness proportionally increases, perhaps larger grants would be useful.

COCOP has an enormous potential to coordinate activities related to a less wasteful, more appropriate development.

Sector	
AGRICULTURE	[x]
SMALL SCALE INDUSTRY/ARTISANRY	[ ]
WATER & SANITATION	[ ]
ENERGY	[ ]

AT Initiative	Present	Potential
Research	[x]	[x]
T/A Demonstration	[ ]	[x]
Manufacture/Construction	[ ]	[x]
Dissemination/Training	[ ]	[x]

NAME: BANCO INTERAMERICANO DE DESARROLLO (BID - Inter-American Development Bank-IDB)

MAILING ADDRESS: Casilla 5872
La Paz, Bolivia

PHONE: 376293

CONTACT: Ing. Fred B. Giminez, Sectoral Industries

INSTITUTIONAL SUMMARY: The Bank is funding rural development projects in the following areas:

- Colonia Yapacani (see CORDECRUZ in Institution Section)
- Alto Beni
- Chiquiaca Pampa Redonda
- Rurrenabaque

They provide expatriate expertise and support national researchers in providing technical help to small farmers. They provide loans for the purchase of simple tools and for improved seed varieties. They support IBTA nationally in its research and extension, especially in the testing and dissemination of improved seed varieties.

Sector	
AGRICULTURE	[X]
SMALL SCALE INDUSTRY/ARTISANRY	[X]
WATER & SANITATION	[X]
ENERGY	[X]

AT Initiative	Present	Potential
Research	[ ]	[ ]
T/A Demonstration	[ ]	[ ]
Manufacture/Construction	[ ]	[ ]
Dissemination/Training	[ ]	[ ]

NAME: BANCO MUNDIAL (World Bank)

MAILING ADDRESS: Casilla 8692
La Paz, Bolivia

OFFICE ADDRESS: Edificio Banco Nacional de Bolivia
Av. Camaacho esq. Calle Colon
La Paz, Bolivia

INSTITUTIONAL SUMMARY: The World Bank is helping to finance the following relevant projects:

Ingavi Integrated Rural Development Project (see Institution report)

Ulla Ulla Rural Development Project (see INFOL Institution report)

Omasuyos-Los Andes Rural Development Project (see INGAVI Institution report)

Livestock development for Beni and Santa Cruz

San Julian Rural Development Project (see CORDECRUZ Institution report)

Forestry Project (see CORDECRUZ Institution project)

Irrigation projects at Rositas and San Jacinto

Education/vocational training

Agricultural credit

In addition, it is considering financing for a livestock (sheep) development program in Oruro, and for a settlement consolidation program (including credit and social infrastructure) in Santa Cruz.

Sector	
AGRICULTURE	[ ]
SMALL SCALE INDUSTRY/ARTISANRY	[ ]
WATER & SANITATION	[X]
ENERGY	[ ]

AT Initiative	Present	Potential
Research	[ ]	[ ]
T/A Demonstration	[ ]	[X]
Manufacture/Construction	[x]	[X]
Dissemination/Training	[ ]	[X]

NAME:	CARE, INC.		
MAILING ADDRESS:	Casilla 6043 La Paz, Bolivia	Casilla 354 Sucre, Bolivia	Casilla 1340 Tarija, Bolivia
OFFICE ADDRESS:	Av. Arce 2342 La Paz, Bolivia	Calle D. Cal[illegible] Sucre, Bolivia	Edificio El Triunfo Tarija, Bolivia
PHONE:	358479, 363270, 362227	2643, 4067	2856

CONTACT: Marty Schwartz, Program Manager, La Paz Water Project

INSTITUTIONAL SUMMARY: CARE has two projects in Bolivia: one is the food distribution program and the other, main program is building small community water systems. The water project is managed as two different programs due to separate funding sources. The first program was initiated in 1977 and begun in 1978 in Sucre.

CARE signed a three year contract with CORDECH, the departmental development corporation, to build 30 water systems for communities between two hundred and two thousand population. A year later a contract was signed with CODETAR in Tarija to build an additional fifteen water systems in their department. An agreement was made between CARE and USAID to provide $b450,000 over three years to support the water projects.

STAFF AND ORGANIZATION: CARE has twenty-six employees (twenty-three Bolivians and three expatriates), of whom fourteen are in La Paz. In the La Paz office are Emil Steinkrauss, Director; Manuel Torres, Deputy Director; Jorge Leon, Food Program; a project engineer for the water program with CORDEPAZ; three secretaries, two drivers and four office workers.

In Chuquisaca, Alfredo Leon is the Project Engineer for the water program with CORDEC. There are six other employees: a secretary, a promoter, two drivers and two warehouse people.

In Tarija, Adel Aguirre is the Project Manager for the water program with CODETAR. Other employees include one promoter administrator, a secretary, two drivers and a warehouse person. One more promoter is needed.

SPECIAL PROGRAMS: CARE, with USAID funds, supplies all the purchased materials for the water systems. A CARE promoter locates target communities and collects background socio-economic data and organizes a Comite Proaguas Potables. The counterpart corporation (CORDECH or CODETAR) provides the survey team to do the engineering study. CARE's engineer designs the system and arranges for materials. The promoter organizes the community to gather local materials and to establish a work plan for the labor force to do the actual construction. The counterpart corporation provides transportation of all materials and a construction supervisor to direct the actual work. Finally, the CARE promoter organizes an administrative committee and trains a maintenance crew. The committee is responsible for collecting fees from the users and insuring adequate maintenance and repairs to keep the system in working order.

The program was slow in starting at first, while working relationships were being established with the counterparts, while tools, equipment and construction materials were being obtained (many imported from the States), and while construction details of the various sytems were being worked out. The original estimate of forty-five systems in two departments by the end of 1980 has been revised and augmented to sixty or sixty-two systems by the end of 1980. Seventeen systems have been completed, eleven are under construction (two need only well pumps to be operational) and ten more are being designed. See Current AT in Water and Sanitation, Southern Bolivia Community Water Systems, below.

AT INITIATIVE -- Water and Sanitation: An appropriate innovation in all the systems is the use of locally made fittings for the individual household connections to tap into the distribution main rather than the more expensive imported fittings. In general the CARE water systems are about as appropriate as conditions will permit. There is no simple low capital solution for residents of the Chaco where deep ground water is the only readily available source for concentrated communities. There are some instances where the CARE systems are replacing existing appropriate technologies (hand pumps and hand dug wells).

COMMENTS:

A rough economic analysis would indicate that hand dug wells with hand pumps would be cheaper per family by about half for a town like Tolomosa: $b2,500/family for a hand dug well and simple hand pump (either a national product like the project INGAVI pump or an imported Japanese model) vs. $b5,750/family for the central system that was built.

There are several other factors to consider. The central system has additional capacity so it can be expanded. The cost per household is reduced with each new connection. On the contrary, individual wells have a finite cost to each household and the cost increases with inflation. The central system offers a potentially higher standard of living. Running water affords an easier opportunity for better personal hygiene via showers and clothes washing sinks.

One question comes up: Could two communities have afforded water if the cost had been half as much from individual wells? The limiting factor with the CARE water program is not funds but manpower from the two collaborating agencies, and materials and transportation. It is an unresolved question. Probably a major factor at that point was that the community wanted the central system and was willing to work for it. They perceived the central system as affording a higher standard of living. They were able to organize themselves and work together as a group to accomplish their community goal. An organization now exists within the community to maintain the system. There are many other potential long-term benefits from such organization.

Sector	
AGRICULTURE	[X]
SMALL SCALE INDUSTRY/ARTISANRY	[X]
WATER & SANITATION	[ ]
ENERGY	[ ]

AT Initiative	Present	Potential
Research	[ ]	[ ]
T/A Demonstration	[X]	[X]
Manufacture/Construction	[ ]	[X]
Dissemination/Training	[ ]	[X]

NAME: INTERNATIONAL VOLUNTARY SERVICE (IVS)

MAILING ADDRESS: Casilla 20190
La Paz, Bolivia

OFFICE ADDRESS: Abdon Saavedra 2216
Sopacachi, La Paz, Bolivia

PHONE: 326228

CONTACT: Philip Blair, Field Director and Country Representative
Martha D. Lamborn, Assistant to the Field Director

INSTITUTIONAL SUMMARY: IVS is a private voluntary organization. IVS provides technical support to rural families in the highlands. They focus on agriculture, public health, and small business/cooperative development. Their program was initiated in 1976. They cooperate with AMERINDIA and MINK'A and spent US$31,900 in the fiscal year ending June 30, 1978.

STAFF: Three persons compose the staff: a director, a handicraft cooperatives specialist and a veterinarian.

AT INITIATIVE: IVS reports that they have a project in southwest Bolivia in which solar hot water heaters are being built locally. These are flat plate, convective flow designs, according to Philip Blair's description. He reports the project as being welcomed by the participants and quite successful.

An IVS handicraft advisor is working with the Q'ante Cooperative, a group of member cooperatives working in the fringe of La Paz and on the altiplano. One AT principle which this IVS volunteer is applying is the training of cooperative members to do their own marketing, including management and dispatching of exports. The production of Q'ante Cooperative centers on handicrafts and musical instruments.

COMMENTS:

This group is interested in any AT which could be utilized in their project area.

Philip Blair, an anthropologist, made a strong point that a functioning AT exists among the Indians of Altiplano. He also said that outside agencies should be most careful not to interfere with this existing AT. For example, in years past it has been recommended that wheat be grown in the Altiplano. Not only is wheat lower in lycine content than quinua, the indigenous cereal, but wheat yielded less than quinua.

Blair also commented that soft AT is often underestimated, i.e. that a solar water heater is a highly visible gadget, while an improved strain of quinua is a much less impressive sight, but may be much more useful.

Blair further pointed out that when, in the Puno area, Indian built terraces were flattened in a development scheme, the result was that flood and salinity control were lost. According to him, P.L. 480 wheat has ruined the local wheat market in Bolivia.

He also commented that the edible oil factory at Cillamontes in Tarija runs at low capacity as the area has no harvesting equipment, insufficient transport, and no storage capacity.

He recommended that a documentation center on AT be established in Bolivia which makes publications available publications in Aymara and Quechua, in order to reach the Indian population. This could be done best by a multi-media center with printed materials, but with an emphasis on visual and taped materials to have an impact upon the greatest number of the rural poor, many of whom are illiterate or barely literate.

Sector	
AGRICULTURE	[X]
SMALL SCALE INDUSTRY/ARTISANRY	[ ]
WATER & SANITATION	[X]
ENERGY	[ ]

AT Initiative	Present	Potential
Research	[ ]	[ ]
T/A Demonstration	[X]	[X]
Manufacture/Construction	[X]	[X]
Dissemination/Training	[X]	[X]

NAME: PLAN DE PADRINOS (Foster Parents Plan)

MAILING ADDRESS:	Casilla 6181 La Paz, Bolivia	Casilla 424 Sucre, Bolivia
OFFICE ADDRESS:	Av. Busch esq. Costa Rica No. 794 La Paz, Bolivia	Aniceto Arce 593 Sucre, Bolivia
PHONE:	328150	4151
CONTACT:	Albrecht Hering, Director. La Paz, Bolivia	Jose Savedra, Project Director Tambillo

INSTITUTIONAL SUMMARY: Foster Parents Plan is a world wide direct help organization with programs in eighteen countries, nine of which are in Latin America. Foster Parents in North America or Europe support a child in one of the programs by sending US$20/mo. and exchanging letters. Five dollars a month goes directly to the family and the rest is divided up between projects and administration. In Bolivia, the plan constructs schools, in conjunction with the Ministry of Education, and operates vocational training programs. They have a public health promotional program and an immunization program with a mobile medical van. They have done some water supply and sewage projects in La Paz and Sucre. There are approximately 10,500 families participating in the program. The annual budget is about $US2½ million.

STAFF: The La Paz director is Albrecht Hering; the Sucre director is Hans Ditsselboem. The plan has a total of one hundred eighty employees: seventy social workers, thirty-three medical workers, four education workers, twelve community development workers, six coop workers, twelve translators, thirty-eight administrative personnel and five rural program workers. A majority of the social workers and community development workers speak either Aymara or Quechua. The doctors, nurse and two nurses aides in Sucre are native Quechua speakers.

SPECIAL PROGRAMS: While the La Paz and Sucre offices are primarily urban oriented, the Tambillo center project, established in 1978, is their first rural project. Jose Savedra, the director at Tambillo, is a native Aymara speaker. He was formerly with the INGAVI project, but left because of the politics of the organization. The Tambillo project recently built a large three story community center with large rooms for meetings,

a health clinic, a store room, and offices for the project and for the agricultural credit union (US$15,000 budgeted) and have an agronomist on the staff to offer assistance. The center's five person staff lives in the community and has a close working relationship with the 2,000 member families.

The community development program has an annual budget of US$30,000, including US$6,000 for water wells and US$6,000 for sanitation and latrines.

The center offers educational programs, including agricultural training. They plan to do some demonstration on the center's land. They have started some tree planting and are interested in a tree nursery.

AT INITIATIVE: They are very interested in AT and are in an excellent position to implement it. Specifically, they are interested in the concept of composting agricultural waste, and in compost privies. They are especially interested in any kind of training that could be provided to their staff in appropriate technology, and in information relating to technologies that they could utilize.

COMMENTS:

Their center would be an ideal demonstration center for appropriate technology.

Sector	
AGRICULTURE	[x]
SMALL SCALE INDUSTRY/ARTISANRY	[ ]
WATER & SANITATION	[ ]
ENERGY	[ ]

AT Initiative	Present	Potential
Research	[x]	[x]
T/A Demonstration	[ ]	[ ]
Manufacture/Construction	[ ]	[ ]
Dissemination/Training	[ ]	[x]

NAME: PROYECTO AGROBIOLOGIA COCHABAMBA--(Cochabamba Agrobiology Project)

MAILING ADDRESS: Casilla 544
Cochabamba, Bolivia

OFFICE ADDRESS: Centro Portales
Cochabamba, Bolivia

CONTACT: Ing. Agr. Franz Augstburger, Project Manager

INSTITUTIONAL SUMMARY: This project is financed by a Swiss Foundation "Pro-Bolivia", which in turn is financed by the F undación Simon Patiño. Their operation base is the Centro Filogenetica-Pairumani, also financed by the Fundación Simon Patiño.

In addition to salaries, the project has operating funds of b$200,000/year for four years. Buildings and a vehicle are provided in addition. Their object is to see if the methods developed in Europe by the agrobiology group can be used in Bolivia.

STAFF: The project has two agronomists, one of whom is a local graduate student, and has funding available for another agronomist.

AT INITIATIVE-Agriculture: Project work covers the following:

- Improved use of barnyard manure
- Multiple cropping systems
- Intercropping or rotating lupine (a legume) with potatoes and with beans (a legume)
- Intercropping corn and a legume, possibly for silage
- Dolichos lab lab to be used in Santa Cruz

  - Soil improvement through compost produced by:

    Large experimental farm
    Campesinos
    Biogas production residue

The project cooperates with CIFEMA on a bio-gas installation and on the development of simple plows for campesinos.

The project plans an AT documentation center at the library of the Centro Pedagogico Portales at Cochabamba. The Centro Portales is the old Cochabamba residence of the Patino family and is also financed by the Fundacion Patino.

COMMENTS:

Mr. Augstburger appears to be a well-trained agronomist and a serious investigator. How much his sponsors are influenced by the organic gardening cult is not quite clear.

Locating an AT/Agricultural documentation center at the Centro Portales could be an alternative if one cannot be established at the agriculture faculty of San Simon, also in Cochabamba.

NON PROFIT AND PRIVATE VOLUNTARY ORGANIZATIONS WITH RELIGIOUS AFFILIATIONS

INSTITUTIONS SURVEYED:

CARITAS

ACCIÓN CULTURAL LOYOLA (ACLO)

CENTRO DE INVESTIGACIÓN Y PROMOCIÓN DEL CAMPESINADO (CIPCA)

COLONIA PIRAI

COMITÉ CENTRAL MENONITA (CCM)

MENNONITE ECONOMIC DEVELOPMENT ASSOCIATES, INC. (MEDA)

HEIFER PROJECT INTERNATIONAL/METHODIST EVANGELICAL MISSION AT SANTA CRUZ

FUNDACIÓN INTEGRAL DE DESARROLLO (FIDES)

COMISIÓN BOLIVIANA DE ACCIÓN SOCIAL EVANGELICA (COMBASE)

CANADIAN BAPTIST MISSION

FUNDACIÓN ECUMENICAL PARA EL DESARROLLO (FEPADE)

ASEC

Sector	
AGRICULTURE	[x]
SMALL SCALE INDUSTRY/ARTISANRY	[ ]
WATER & SANITATION	[ ]
ENERGY	[ ]

AT Initiative	Present	Potential
Research	[ ]	[ ]
T/A Demonstration	[x]	[x]
Manufacture/Construction	[x]	[x]
Dissemination/Training	[ ]	[x]

NAME: CARITAS (Catholic Relief Services)

MAILING ADDRESS: Casilla 2561
La Paz, Bolivia

OFFICE ADDRESS: Calle J. Perez 275
La Paz, Bolivia

PHONE: 323335

CONTACT: Ron Rivera

INSTITUTIONAL SUMMARY: Caritas is the Bolivian counterpart of Catholic Relief Services and is primarily under the direction of local bishops. Catholic Relief Services has two types of programs. One is a food distribution program similar to that of CARE, and the other is a community organization and community development program. They provide funds, skills, training, and ongoing organizational assistance for a broad range of community development activities for rural families.

Their approach is general consciousness-raising and community organization. They let the communities identify their needs and then help them to obtain solutions to their own perceived problems. They do a great deal toward the promotion of women's rights and women's participation in development. They have no specific program of promotion such as "Water Systems", or "Rural Health". They have helped communities to obtain a pump for a community well, once that has been identified as a need by the community.

The development philosophy of Caritas is to support groups as opposed to individuals because, "if a person becomes too skilled he goes to the city." Projects are stressed in which Caritas provides organizational and institutional support, with funding coming from the group receiving assistance. This insures commitment by the group and cuts through Caritas' red tape and lag time for funding.

STAFF: There are three promoters in the program. Two are North Americans, one a former Peace Corps volunteer with five years community development experience. The Bolivian promoter has vast experience in community development work with numerous organizations, speaks Aymara and some Quechua, and has travelled considerably throughout South America.

SPECIAL PROGRAMS: Caritas is involved with numerous community development projects in the Chapare area of Cochabamba Department (Caritas, Cochabamba-Phone: 24616; Contact: Roger Hurbutise, Field Worker).

At a fish farming operation, the fish pond is being cleared and water diversion channels are being designed. Caritas is also organizing the construction of a pontoon for river crossing to an area where no access is available. In a recent project, they had organized five groups of ten farmers each to grow tomatoes which had been adapted to the Chapare. However, this flooded the Cochabamba tomato market and no one could sell their tomatoes.

AT INITIATIVE: All three promoters have had occasion to recommend an appropriate technology as a solution to a problem. They admitted lack of knowledge and the need for more specific information-perhaps a training program on techniques and options. One community with which they were involved was planting onions as a cash crop, but was not getting its crop to market soon enough. Caritas suggested a solar greenhouse for starting the onions in seed flats to get a jump on the season. Their plans were for a northern temperate latitude and would not have been correct for Bolivia. (Luckily, the VITA volunteer, Max Kroschel, reviewed their plans and made the appropriate suggestions for a new design.)

COMMENTS:

With some basic training, they would not only be better informed about what specific options exist, but they would also understand the correct application of those options.

Sector	
AGRICULTURE	[x]
SMALL SCALE INDUSTRY/ARTISANRY	[x]
WATER & SANITATION	[ ]
ENERGY	[ ]

AT Initiative	Present	Potential
Research	[ ]	[ ]
T/A Demonstration	[ ]	[x]
Manufacture/Construction	[ ]	[ ]
Dissemination/Training	[x]	[x]

NAME: ACCIÓN CULTURAL LOYOLA (ACLO--Loyola Cultural Action Group)

MAILING ADDRESS: Casilla 538
Sucre, Bolivia

OFFICE ADDRESS: Calle Loa 682
Sucre, Bolivia

PHONE: 2230

CONTACT: Jorge Trias, Director

INSTITUTIONAL SUMMARY: ACLO is a social action educational organization based in Sucre, with programs in Chuquisaca, Potosi and Tarija. It is sponsored entirely by private funding, mostly from Catholic groups in Europe. While it is not a missionary group, the programs have spiritual emphasis.

ACLO does not perform community development projects directly. Rather, it helps communities to organize around a problem, supports them and helps them to find the necessary aid or expertise from government or private agencies. ACLO works closely with several artisan cooperatives which they helped to found and with Agrocentral, an agricultural cooperative.

ACLO has done studies on income and population. It teaches the use of fertilizers and pesticides, and supports reforestation with eucalyptus trees.

STAFF: They have 80 employees, most of whom are Quechua speakers.

SPECIAL PROGRAMS: There are four programs in each of the three departments. A Quechua radio station has three classes of programs: general promotion and consciousness--raising, literacy programs for Spanish, and religious programs. They have a printing operation and numerous pamphlets and books ranging from simple "how to" agricultural handbooks and the promotion of women, to histories of Precolombian civilization and religious material. They also print newspapers and newsletters. The community development program has social workers and promoters who concentrate on community organization and consciousness--raising. The educational program includes weekend workshops week-

long short courses, longer term literacy programs, skills training, and agricultural courses at ACLO's demonstration farms.

COMMENTS:

Because of their vast communication network of radio programs, publications, community visits and education programs, ACLO is in an excellent position to disseminate information and to train end users. If their promoters and educators were aware of AT options they would have ample opportunity to suggest or promote their use in appropriate situations. They could even republish some AT plans or ideas, given their printing capability. Any program of training or information transfer should consider ACLO as a participant.

Sector	
AGRICULTURE	[X]
SMALL SCALE INDUSTRY/ARTISANRY	[X]
WATER & SANITATION	[ ]
ENERGY	[ ]

AT Initiative	Present	Potential
Research	[X]	[ ]
T/A Demonstration	[ ]	[ ]
Manufacture/Construction	[ ]	[ ]
Dissemination/Training	[X]	[X]

NAME: CENTRO DE INVESTIGACION Y PROMOCIÓN DEL CAMPESINADO (CIPCA--Center for the Research and Advancement of the Peasantry)

MAILING ADDRESS: Casilla 5854
La Paz, Bolivia

OFFICE ADDRESS: Sararnaga 479, 2° piso
La Paz, Bolivia

INSTITUTIONAL SUMMARY: CIPCA was organized by Jesuit priests, but now has a broader base. It is a non-profit research institute, which develops both formal studies for its "Cuadernos de Investigación" (Research Notebooks) series and educational pamphlets for its "Serie Popular" (People's Series).

Like related Catholic social action organizations such as ACLO, which works in Southern Bolivia, CIPCA also has a program of extension services which focuses on organizing campesinos, fomenting cooperatives of consumers and credit, and teaching appropriate production methods.

CIPCA is also affiliated with the ESCUELAS RADIOFONICAS DE BOLIVIA (ERBOL--Radiobroadcast Schools of Bolivia), an umbrella organization which includes ACLO and other groups of Roman Catholic private voluntary organizations. Supported by contract funds from the Catholic University, and with funding from CIDD and MISEROR, the participating organizations develop and broadcast radio programs in several Bolivian languages. ERBOL is affiliated with the Asociacion Latinoamericana de Educacion Radiofonica (ALER--Latin American Association of Radiobroadcast Schools).

AT INITIATIVE: The CIPCA "People's Series" are inexpensively produced publications which feature cartoons and bilingual texts in Spanish and either Aymara or Quechua. Each is oriented to campesino readers and explains either production techniques or social processes. Sample pamphlets include "how to do it handbooks" on potato, onion and coffee cultivation techniques. Some of these publications include diagrams on AT such as seed beds, green manure, or rotation principles.

In its "Radio School" work, CIPCA and the other organizations develop programs in Aymara and regional dialects of Quechua. The programming emphasizes literacy

training, though some scripts diffuse information on technical matters such as selecting seed.

These radio schools represent an AT for disseminating information to rural campesinos, many of whom are more fluent in one of the native languages of Bolivia than in Spanish. Radios are more common in rural households than literate individuals.

COMMENTS:

The strength of this organization lies in close relationships with campesino communities, and it is a vehicle for appropriate communications of AT through extension, publications, radiobroadcasts and background research.

Sector	
AGRICULTURE	[x]
SMALL SCALE INDUSTRY/ARTISANRY	[ ]
WATER & SANITATION	[ ]
ENERGY	[x]

AT Initiative	Present	Potential
Research	[ ]	[ ]
T/A Demonstration	[ ]	[x]
Manufacture/Construction	[x]	[x]
Dissemination/Training	[x]	[x]

NAME: COLONIA PIRAI

MAILING ADDRESS: Casilla 1818
Santa Cruz, Bolivia

OFFICE ADDRESS: Kilometer 12 on the Cochabamba Highway
Santa Cruz, Bolivia

CONTACT: Miguel Parrella, Director of Windmill Project

INSTITUTIONAL SUMMARY: Colonia Pirai is a Jesuit-run farm orphanage with 72 children. It provides education and technical training in metal working skills.

AT INITIATIVE: They are currently constructing a windmill to be used in irrigating four to six acres of newly planted fruit trees. (See Energy Sector Chapter AT Inventory for details).

COMMENTS:

This group seems to be well primed for funding to build more windmills.

Sector	
AGRICULTURE	[X]
SMALL SCALE INDUSTRY/ARTISANRY	[X]
WATER & SANITATION	[X]
ENERGY	[X]

AT Initiative	Present	Potential
Research	[X]	[X]
T/A Demonstration	[X]	[X]
Manufacture/Construction	[X]	[X]
Dissemination/Training	[X]	[X]

NAME: COMITÉ CENTRAL MENONITA (CCM--Mennonite Central Committee--MCC)

MAILING ADDRESS: Casilla 213
Santa Cruz, Bolivia

OFFICE ADDRESS: Calle Arenales, esq. Puerto Pacheco
Santa Cruz, Bolivia

PHONE: 23773

CONTACTS: Felipe Bender, Program Coordinator
Freida Schelinberg, Rural Health Program
Milton Falb, Volunteer
Phil Flora, Volunteer
Ken Gingrich, Volunteer

INSTITUTIONAL SUMMARY: The Mennonite Central Committee was founded in 1920 by the Mennonite Churches in the United States and Canada for the purpose of assisting Russian Mennonite resettlement. Its program in Bolivia was initiated in 1959.

The CCM in Bolivia is a private voluntary organization (PVO). Volunteers come from the United States and Canada. They have little connection with the Mennonite colonies in Santa Cruz, where settlers came from the Soviet Union and northern Germany via Canada and Mexico. These settler colonists are more conservative than the volunteer families. In this sense the name of the organization is misleading: CCM is a PVO service organization for community development rather than a missionary group trying to make converts.

Worldwide, the work of the Committee is financed and sponsored by donations made at Sunday meetings of Mennonites throughout the United States and Canada.

CCM in Bolivia collaborates with other missionary and volunteer organizations in the areas where CCM works. In the Santa Cruz area, CCM volunteers particularly coordinate their work with Methodist missionaries, Fundacion Integral de Desarrollo (FIDES) and the Heifer International Project. CCM also collaborates on projects with CORDECRUZ, the universities, the British Mission, CIAT, MACA, FOMO and others.

STAFF AND ORGANIZATION: CCM has about fifty volunteers working in Bolivia, of whom twenty are working with agriculture, fourteen in health, eight as teachers and three or four in nutrition. There are also progam coordinators.

Volunteers come for an initial thirty month term. They may renew for three years. During the first term they receive US$39/month; during the second US$77 and subsequently $US277. In addition, they are provided housing -- often built by the villagers among whom they work, and food and transportation as needed. They receive a home leave trip between tours.

AT INITIATIVE - Agriculture: CCM operates a training a demonstration farm five kilometers from Santa Cruz, called by some people "The Mule Farm." This farm has boarding facilities for forty people. Short courses of several days duration and up to one week are given to campesinos in the use of animal traction, the use and repair of harnesses and the use, repair and maintenance of animal traction machinery.

CCM also sells animal traction equipment to small farmers and assists them with the ongoing maintenance of this equipment. CCM sells yokes, harnesses and steel plows.

A small one-animal plow with a wooden beam sells for US$50. A similar plow of all steel construction with a guide wheel is sold at US$150. An all steel cultivator imported from Argentina is sold at US$75. A harness for a team of horses sells for US$150. Farmers who want a team of animals and implements have to make a down payment of 25%. CCM may set the repayment terms, but farmers have to pay 12% interest on the outstanding loan. MEDA has provided credit to farmers in this program.

One volunteer is trying to establish a contact with the Mennonite colonies in order to try to transfer some of their technology to the general Bolivian agricultural sector. He seems quite efficient. He speaks both the old Low German of the Mennonite colonists and Spanish, and he brings colonists and Bolivian technicians together.

AT INITIATIVE-Water and Sanitation: The CCM has two projects in the field of water supply and sanitation: a well drilling assistance program and a Rural Health Program that has a latrine component.

The well drilling assistance program has been in operation for six or seven years. Hundreds of wells have been drilled. There are three volunteers currently (1979) working in the program. The two interviewed have been in Bolivia less than a year and each has drilled twenty-five or thirty wells. Technical details of the CCM drilling rig and the wells produced are discussed in the AT Inventory In the Water and Sanitation Sector Chapter above.

The Mennonite Rural Health Program embeds a latrine component in a more general promotion of health. This program began in 1971. During 1979, ten nurses were working with over 100 promoters in thirty villages of colonists beyond Montero, Santa Cruz. The volunteer nurses live in a community for two years. During the first year, they establish a health committee and organize the community to build a health post. They establish themselves within the community and select individuals to train as health promoters.

The second year they begin a year course to train the health promoters. The class spend half a day in theory and classes and the other half in practice providing services to the community. Every three months these promoters go to Montero for a weekend

workshop in which the training groups from different communities share experiences and receive special training. These quarterly workshops continue after the one year training. Nurses also make follow up site visits to the health post to see how the promoters are performing and to define the network of support.

The CCM Rural Health Program extends to communities outside the radius where Saneamiento Ambiental and Salud Publica work, so it does not conflict with or duplicate the efforts of these agencies. The CCM works in colonies not included in the AID sponsored Montero Rural Health Program.

The volunteer nurses use an extensive film strip library on Health and Hygiene topics, many from ILCE and UNESCO in Mexico. The program has several twelve volt film projectors that run off car batteries.

Each promoter is encouraged to build and use his or her own latrine to provide a demonstration example for the community. Volunteers were not particularly encouraged by the response to the latrines. They also reported problems with high water tables flooding out latrines during the rainy season, causing many of them to collapse. Saneamiento Ambiental had promised to provide concrete losas at cost, but these have never been made available. The latrines the CCM has been supervising have been constructed entirely of local materials.

CCM expressed interest in an above-ground vault privy to avoid the problem of ground water and in utilizing composting as an incentive to promote privies. CCM is testing a vault privy at their demonstration and training farm. They expressed interest in workshops or training programs for their volunteers concerning low cost sanitation options.

AT INITIATIVE-Small Scale Industry and Artisanry: CCM is involved in AT prototype design and development at their shop in Santa Cruz, and at "The Mule Farm" they are involved with AT dissemination.

CCM has developed two prototype peanut shellers, one of which is quite effective. If proven in further tests, the CCM hopes someone will produce it commercially. CCM, however, expressed no interest in production or sales and only will sell some implements as a service to the campesinos they train.

Some women CCM volunteers have promoted handicrafts (crochet, knitting) and have introduced home food processing techniques (jams, preserves, etc.). The background social feasibility study (AMARU IV, 1979) reports that one Mothers' Club has plans to develop a small scale industry in their rural community, based on the food preservation and processing techniques which colonist women learned from a CCM volunteer.

A CCM source stated "CCM is not presently involved with AT industry, but it has AT specialist volunteers in training and may soon move into this field."

Sector	
AGRICULTURE	[X]
SMALL SCALE INDUSTRY/ARTISANRY	[X]
WATER & SANITATION	[X]
ENERGY	[ ]

AT Initiative	Present	Potential
Research	[ ]	[ ]
T/A Demonstration	[ ]	[ ]
Manufacture/Construction*	[X]	[X]
Dissemination/Training	[ ]	[ ]

NAME: MENNONITE ECONOMIC DEVELOPMENT ASSOCIATES, INC. (MEDA)

MAILING ADDRESS: Casilla 3086
Santa Cruz, Bolivia

PHONE: 26350

CONTACT: Kenneth Graber, Director

INSTITUTIONAL SUMMARY: MEDA offers economic assistance programs which primarily provide small amounts of credit to farmers and communities in the San Julian Colony. In the past, MEDA has provided a US$25,000 loan to La Merced for agricultural production loans; a US$20,000 loan to El Progreso, a rural village cooperative in La Torno, for crop production; and US$6,5000 to a group to set up a store in Tres Palmas.

Recently, MEDA has been providing loans of less than US$1,000 to small farmers to purchase animal traction equipment, horses, and carts. Terms are 12% interest, and the farmer must put up 25% of the loan value and have three hectares cleared.

MEDA has a staff of two and its program was initiated in 1973. Its budget for the fiscal year ending June, 1978 was US$29,000 of which US$14,000 was new investments and US$15,000 was program costs.

MEDA cooperates closely with the Mennonite Central Committee and the local Methodists.

*Credit

Sector	
AGRICULTURE	[x]
SMALL SCALE INDUSTRY/ARTISANRY	[ ]
WATER & SANITATION	[ ]
ENERGY	[ ]

AT Initiative	Present	Potential
Research	[ ]	[ ]
T/A Demonstration	[x]	[x]
Manufacture/Construction	[ ]	[ ]
Dissemination/Training	[x]	[x]

NAME: HEIFER PROJECT INTERNATIONAL/METHODIST EVANGELICAL MISSION AT SANTA CRUZ (Regional Office)

MAILING ADDRESS: Casilla 432
Santa Cruz, Bolivia

PHONE: 39252

CONTACT: Walter Henry, Missionary and Director (for both organizations)

INSTITUTIONAL SUMMARY: The Methodist Evangelical Mission in Bolivia is headquartered, in Cochabamba with regional offices throughout Bolivia. The regional office at Santa Cruz is under the direction of a local board of directors and receives much of its funding from Methodist churches in the United States, OXFAM and the World Food Fund. Past programs have included rural health clinics, a 1 kw radio station and basic educational programs at four colleges. They cooperate in many health programs with the Bolivian government. They are also promoting beans as a food crop.

Walter Henry spends much of his time drilling wells in a program designed to improve water supplies and to train well drillers and establish them in business. Much of this work is done in the San Julian Colony. He uses a gasoline-driven mud pump in drilling to clear the mud often encountered. Drilling costs are about US$27.50 per meter compared with US$40.00 per meter when done commercially. Most wells cost US$400-$1,000 and these are financed with a 50% down payment and the balance due over one to two years. He has experienced many problems obtaining payment.

They have also been working with a very simple hand pump which simply uses a strong stick as a handle mounted on a wood post for a fulcrum with the sucker rod attached to one end. Mr. Henry claims this simple design has been much more successful than cast metal or welded steel pumps in that the user has been much more successful in repairing them when they break.

The Heifer Project International program was initiated in 1968, and in 1977 spent US$16,800. Mr. Henry is the only representative in Bolivia. Roughly 40% of project support is received from the Catholic Church. The Heifer Project gives a heifer to a farmer with the understanding he will give its first heifer offspring back to the Project. To date, the Project has given away 2000 heifers, and there are 330 heifers currently "in the heifer chair".

Sector	
AGRICULTURE	[X]
SMALL SCALE INDUSTRY/ARTISANRY	[X]
WATER & SANITATION	[ ]
ENERGY	[ ]

AT Initiative	Present	Potential
Research	[ ]	[X]
T/A Demonstration	[X]	[X]
Manufacture/Construction	[X]	[ ]
Dissemination/Training	[X]	[X]

NAME: FUNDACION INTEGRAL DE DESARROLLO (FIDES--Integral Foundation for Development)*

MAILING ADDRESS: Casilla 3086
Santa Cruz, Bolivia

CONTACT: Harry Peacock, Project Director

INSTITUTIONAL SUMMARY: This Private Voluntary Organization (PVO) evolved from the Comite Iglesias Unidas (CIU-United Committee of Churches) which was formed in 1968. CIU managed an orientation program for newly arrived highland and valley migrants to the northern Santa Cruz region in the San Julian colonization project through 1979. FIDES represents a reorganization of CIU. FIDES was incorporated in Bolivia by a collective of Mennonite and Methodist expatriates from the United States and Bolivian development workers for collaborative projects. The purpose of the PVO is to manage a consolidation project in the Santa Cruz colonies of San Julian and other colonies from Chane to Piray.

STAFF AND ORGANIZATION: Harry Peacock, Martin Miller and Jim Becht administer the project. Its Table of Organization is given in Figure VII-

AT INITIATIVE-Agriculture: FIDES stresses agricultural diversification to sustain yields and promote economic stability. The introduction of animal traction is a central component as an alternative to immediate mechanization. Special programs in this Agricultural AT include:

- Demonstration farms managed by the colonists to show the utility of diversified cropping and of animal traction
- Initiation and management of consumer cooperatives and cooperative retail outlets for farm machinery
- Organization of credit for innovations and improvement in agricultural production technology
- Organization of cooperative marketing

- Promotion of planting windbreaks in a form of agro-forestry with fruit, oil producing nut, and commercially valuable timber tree species.

AT INITIATIVE - Small Scale Industry and Artisanry: The FIDES program will train some colonists in blacksmithing.

COMMENTS:

The FIDES program has potential to provide and test a model encouraging rational and economical land use by small farmers in colonization areas. Information-gathering, feedback from participating colonists and an evaluation component are part of the program.

* Note: (This institution report was provided by VITA volunteer David Hess.)

Figure VII-8
Table of Organization FIDES

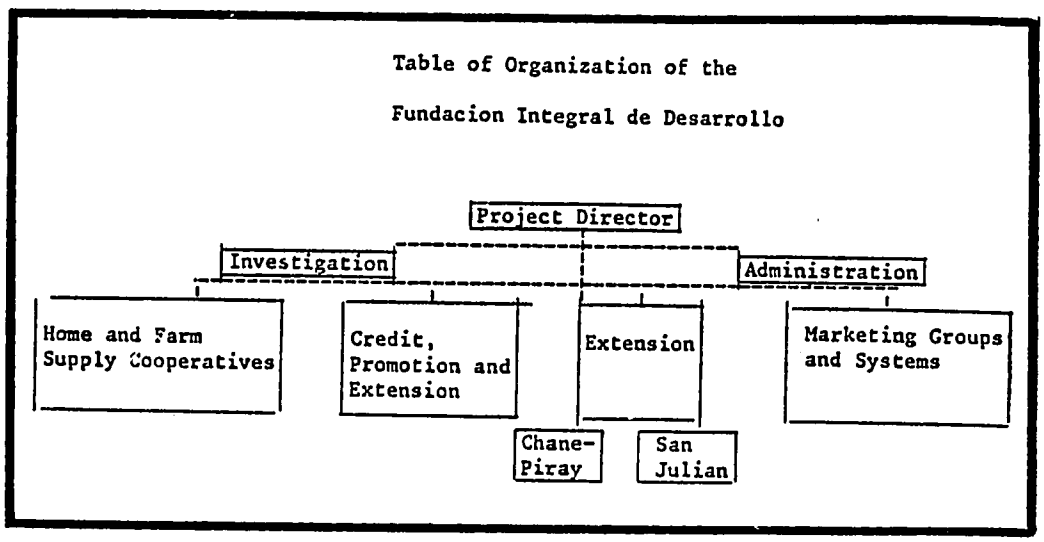

Sector	
AGRICULTURE	[ ]
SMALL SCALE INDUSTRY/ARTISANRY	[ ]
WATER & SANITATION	[x]
ENERGY	[ ]

AT Initiative	Present	Potential
Research	[ ]	[ ]
T/A Demonstration	[ ]	[ ]
Manufacture/Construction	[ ]	[x]
Dissemination/Training	[ ]	[ ]

NAME: COMISION BOLIVIANA DE ACCION SOCIAL EVANGELICA (COMBASE - Bolivian Evangelist Social Action Commission)

MAILING ADDRESS: Casilla 869
Cochabamba, Bolivia

OFFICE ADDRESS: Av. 9 de Abril esq. Haiti
Cochahamba, Bolivia

PHONE: 25137

CONTACT: Luis Demetrio Cassano O., Director of Programs

INSTITUTIONAL SUMMARY: COMBASE was formed in 1964 to be the social action agency for approximately thirteen Evangelist Churches primarily in Cochabamba. Their funds come primarily from the Evangelist Church organization in the United States, but they also receive support from international relief organizations such as Food for the Hungry, Medical Assistance Program, World Neighbors, and Direct Relief Foundation. They collaborate with various private and government agencies within Bolivia like the Centro de Salud de Cochabamba, Alcaldia de Cochbamba, DESEC and the Comite Central Menonita. COMBASE operates a food distribution program in collaboration with CARITAS and is negotiating to extend their service to Oruro and Potosi. They have an emergency relief service which provides emergency assistance during natural disasters or other crisis.

STAFF AND ORGANIZATION: The in-house staff is estimated at thirty-five full-time employees including clerical staff. They provide health, nutritional, and other services.

SPECIAL PROGRAMS: One of the major programs is a Foster Parents Plan supported by the Christian Children's Fund. Families receive social and spiritual counseling, food support and a monthly stipend. A part of this program is health and hygiene education promotion and assistance to build latrines. Latrines are constructed in collaboration with DSA of the Unidad Sanitaria who supply the latrine slabs at cost b$6,500. The latrine program is floundering this year for lack of funds. The program is focused on peripheral barrios of Cochabamba and has few participants from rural areas.

COMBASE operates a medical clinic in Cochabamba with volunteer doctors, interns and students from the Medical School of the Universidad Mayor de San Simon. A mobile medical clinic provides services to three rural provinces around Cochabamba.

AT INITIATIVE: The organization as a whole has little activity in the rural sector. Although it provides some social services there is no apparent mechanism to disseminate appropriate technologies.

COMMENTS:

COMBASE would be a capable participant in the Small Projects Fund as they could promote AT among their affiliates.

Sector	
AGRICULTURE	[ ]
SMALL SCALE INDUSTRY/ARTISANRY	[ ]
WATER & SANITATION	[ ]
ENERGY	[x]

AT Initiative	Present	Potential
Research	[ ]	[ ]
T/A Demonstration	[x]	[ ]
Manufacture/Construction	[x]	[x]
Dissemination/Training	[ ]	[ ]

NAME: CANADIAN BAPTIST MISSION

MAILING ADDRESS: Casilla M-10159
La Paz, Bolivia

OFFICE ADDRESS: Av. Mariscal Santa Cruz 1365
La Paz, Bolivia

PHONE: 328905

CONTACT: Mary Haddow, Missionary

INSTITUTIONAL SUMMARY: Operating as the Unión Baptista Boliviana, Miss Haddow's mission in Tiquina on the shore of Lake Titicaca is one of several Canadian Baptist Missions in Bolivia. The Baptists have been in Bolivia for 60 years.

The Canadian Baptists are funded largely by their home churches and others, and are members of COMBASE.

AT INITIATIVE: The Tiquina mission uses a Canadian made Aermotor-type windmill for pumping all its water. The system has worked successfully for over 30 years. From a well of approximately 10 m, the windmill can easily fill a 2 m storage tank in a day. The mission operates a health clinic and in the 1960s, with assistance from the Peace Corps, they undertook to build a solar hot water system. This was not finished as the Peace Corps was expelled from the country.

COMMENTS:

They appear fully capable of implementing a technology under the Small Projects Fund.

Sector	
AGRICULTURE	[ ]
SMALL SCALE INDUSTRY/ARTISANRY	[x]
WATER & SANITATION	[x]
ENERGY	[x]

AT Initiative	Present	Potential
Research	[ ]	[x]
T/A Demonstration	[x]	[x]
Manufacture/Construction	[ ]	[ ]
Dissemination/Training	[x]	[x]

NAME: FUNDACIÓN ECUMENICAL PARA EL DESARROLLO (FEPADE--Ecumenical Development Foundation)

MAILING ADDRESS: Casilla 1260
Cochabamba, Bolivia

OFFICE ADDRESS: Antezana S - 0537
Cochabamba, Bolivia

PHONE: 21871

CONTACT: Wilfrank Hinojosa T., Executive Director

INSTITUTIONAL SUMMARY: FEPADE is a one year old organization which works in agriculture, health and developing cooperative projects. They receive support from individuals in seven churches in Cochabamba as well as assistance from World Neighbors, Church World Services, Lutheran World Relief, and the Interamerican Foundation.

STAFF AND ORGANIZATION: They employ fourteen persons with various technical and administrative skills. They have five directors and thirty-two associates. They have two programs in the Chapare with simple health clinics.

AT INITIATIVE: Their products include such AT as hand pumps, potable water supplies, electrification and fruit drying.

COMMENTS:

This would be an excellent group to help implement technologies under the Small Projects Fund.

Sector	
AGRICULTURE	[X]
SMALL SCALE INDUSTRY/ARTISANRY	[ ]
WATER & SANITATION	[ ]
ENERGY	[ ]

AT Initiative	Present	Potential
Research	[ ]	[ ]
T/A Demonstration	[X]	[X]
Manufacture/Construction	[ ]	[ ]
Dissemination/Training	[X]	[X]

NAME: ASEC

OFFICE ADDRESS: Oficina Pisagua 700
La Paz, Bolivia

CONTACTS: Marcos Nisinkis, Field Director
Adalbert Kopp, Local Volunteer

INSTITUTIONAL SUMMARY: This group is supported by church funds from several West European countries and from the United States. It runs extension service style projects which cover the improvement of vegetables, corn and potato production in the higher altitude areas, and coffee, cacao, rice, yuca, bananas and plantains in the lower. ASEC cooperates with the United States Heifer Project International.

STAFF: The staff consists of German and Bolivian volunteers and some paid personnel.

AT INITIATIVE: ASEC applies AT concepts in the construction of drinking water and irrigation systems, and in small pedestrian bridges made from cement and rope.

COOPERATIVES AND COMMUNITIES

COOPERATIVES SURVEYED:

Q'ANTE COOPERATIVE (SEE INTERNATIONAL VOLUNTARY SERVICE)

COOPERATIVA RURAL DE ELECTRIFICACIÓN (CRE)

LA KHOCHALITA

COOPERATIVA CRUCENA

COMMUNITIES SURVEYED:

MENNONITE COLONIES OF SANTA CRUZ

Sector	
AGRICULTURE	[ ]
SMALL SCALE INDUSTRY/ARTISANRY	[X]
WATER & SANITATION	[ ]
ENERGY	[ ]

AT Initiative	Present	Potential
Research	[ ]	[ ]
TA/Demonstration	[ ]	[ ]
Manufacture/Construction	[ ]	[X]
Dissemination/Training	[ ]	[X]

NAME: LA KHOCHALITA (an artisan service center)

OFFICE ADDRESS: Cochabamba, Bolivia

CONTACTS: Alicia Dias, President
Rafael Daza, Controller
Demetrio Zurita, Executive Director
Teresa Vargas, Administrative Secretary

INSTITUTIONAL SUMMARY: La Khochalita was formed in October, 1978 and began operating at Cochabamba in February, 1979. It is a centralized service organization. It was formed under the direction of its member groups and artisans who turned general management operations over to a strong central management.

STAFF AND ORGANIZATION: The central management is carried out by an administrator, an accountant and a secretary.

The administration is competent, dedicated, hard working and versatile.

The administrator is a former artisan from rural Cochabamba Valley who is trilingual (Spanish, Aymara, Quechua). He is experienced in handicraft management, in marketing, and in social promotion. He tends to be dominating -- a quality which could prove to be either an advantage or disadvantage as La Khochalita heads for the problems that can be anticipated for them.

At present La Khochalita has eighteen member groups representing nearly 300 artisans. Most of the groups which joined La Khochalita were groups previously formed under other organizations. Disenchanted with these organizations, they abandoned them to form La Khochalita.

The group leaders and organizers are using the only models and options available to them from the development community. Their organization was structured as a reform of the model they learned from the development community. La Khochalita organizers believed the other commercial service centers did not benefit artisans because these others were corrupt and exploited artisans for personal gain. La Khochalita organizers did not question the structure itself. They believed they could make the model work by eliminating corruption and exploitation from the structure.

The first factor La Khochalita identified with artisans' low income was the unit price paid. Low prices are associated with exploitation. La Khochalita enacted an across-the-boards unit price increase.

Another factor associated with exploitation is excessive profits for the service center/marketeer: La Khochalita eliminated profit margins altogether, both for the artisan groups and for the centralized operation. Their price structure can be summarized as:

Direct Labor + Raw Materials + 8% Administration and Marketing + 3% end control, packaging and dispatching.

The groups themselves receive only payment for the direct labor.

COMMENTS:

The economic model adopted by La Khochalita is not a valid economic structure. Their organization does not reflect unfavorably upon its administrators' capacity or advisors' capability, rather La Khochalita represents an example of the extremes to which groups will go to correct a system when it is the only system known. La Khochalita simply had no options: no other models had been demonstrated to them by those who should have known.

La Khochalita is in for a surprise.

Wayne Frost visited seven of the member groups located in the upper and lower Cochabamba valleys. The group spirit of La Khochalita members would rate among the highest of all groups visited. However, this enthusiasm could dwindle quickly if steps are not taken to restructure the group's marketing functions. Among its principal problems. are:

- Its emphasis on a strong centralized marketing and production control service center at the expense of neglecting the organizational needs of the decentralized production units
- An invalid cost and price structure
- Its overextended size which places undue constraints on the level of development that can be achieved: La Khochalita is already approaching the limits of self-management. Its sales would have to increase ten fold by mid-1980 to meet the minimum expectations of the group. This task is presently physically impossible under existing facilities and improbable under the best of conditions.
- La Khochalita lacks concepts of AT development, as does with the artisanry development community in general

Among La Khochalita's strong points are:

- An excellent perspective of the human, social and cultural factors and an excellent approach to the communities

- Excellent concepts in the role of education and consciousness-raising with respect to fulfilling community needs
- A knowledge of the region and its specific production centers
- Program planning capacity, although some guidance is needed
- Potential to evolve into a true Worker's Self-Managed Enterprise with proper restructuring and assistance

In the case of La Khochalita, Appropriate Technology might work. While by the time an AT project is implemented the situation of La Khochalita may be different than it was at the time of the survey, La Khochalita can be evaluated as a potential high risk/high return investment. Any final decision to fund La Khochalita should be based on a reevaluation of the organization when funding is available.

Sector	
AGRICULTURE	[ ]
SMALL SCALE INDUSTRY/ARTISANRY	[x]
WATER & SANITATION	[ ]
ENERGY	[ ]

AT Initiative	Present	Potential
Research	[x]	[x]
T/A Demonstration	[ ]	[x]
Manufacture/Construction	[ ]	[x]
Dissemination/Training	[ ]	[x]

NAME: COOPERATIVA CRUCEÑA DE SERVICIOS CULTURALES (Santa Cruz Cooperative for Cultural Services)

MAILING ADDRESS: Casa de la Cultura
Santa Cruz, Bolivia

OFFICE ADDRESS: Casa de la Cultura
Santa Cruz, Bolivia

INSTITUTIONAL SUMMARY: This cooperative is a group within the Casa de Cultura (House of Culture) of Santa Cruz. It is organized in four commissions: Artisanries, Periodicals, Research, Theater and Plastic Arts. One project of the Artisanries Commission is of special interest.

AT INITIATIVE-Small Scale Industry and Artisanry: The project to research artesanias in the Santa Cruz Department will provide narrative and graphic descriptions of artisanal production. The product will survey the following artisanal products:

- Hammocks among the Guarayos (a non-Hispanic ethnic group)
- Wool woven goods in the Pampa Grande and Samaipata
- Ceramics in Cotoca
- Straw woven goods in Buenavista
- Painted tutumas and violins in San Jose de Chiquitoa among other products

The research plan calls for a description of the production process, technology and social organization of the artisans. The goal of this study is to investigate the feasibility of organizing the commercialization of local artisans' products.

Sector	
AGRICULTURE	[ ]
SMALL SCALE INDUSTRY/ARTISANRY	[ ]
WATER & SANITATION	[ ]
ENERGY	[x]

AT Initiative	Present	Potential
Research	[ ]	[ ]
T/A Demonstration	[ ]	[ ]
Manufacture/Construction	[ ]	[ ]
Dissemination/Training	[ ]	[ ]

NAME: COOPERATIVA RURAL DE ELECTRIFICACIÓN LTDA. (CRE--Rural Electrification Cooperative, Ltda.)

MAILING ADDRESS: Casilla 1310
Santa Cruz, Bolivia

OFFICE ADDRESS: Beni esq. Vaca Diez
Santa Cruz, Bolivia

PHONE: 37688

INSTITUTIONAL SUMMARY: CRE provides electrical service to rural areas located primarily in the north of Santa Cruz. They operate a 23,200 kw power plant in Santa Cruz which uses natural gas (it can also use diesel) provided from local oil fields.

They service 52,000 customers at a cost of about US$0.05 per kilowatt-hour and charge US$10 for hook-ups. They have been in business nine years and have over 200 employees involved in all aspects of system design, construction, maintenance and administration.

They are currently involved in constructing 1,500 km of new transmission lines including four substation transformers for which USAID, Comité de OO.PP. and ENDE have provided US$12 million. This service will include outlying areas of the town of Santa Cruz.

Sector	
AGRICULTURE	[X]
SMALL SCALE INDUSTRY/ARTISANRY	[X]
WATER & SANITATION	[x]
ENERGY	[x]

AT Initiative	Present	Potential
Research	[ ]	[x]
T/A Demonstration	[x]	[x]
Manufacture/Construction	[x]	[x]
Dissemination/Training	[x]	[x]

NAME: MENNONITE COLONIES

MAILING ADDRESS: Santa Cruz Department

CONTACT: Peter Freisen, Casilla 1122, Santa Cruz

INSTITUTIONAL SUMMARY: Approximately 1,500 families live in the eleven colonies of Mennonites in the department of Santa Cruz. There are considerable differences in the origin of the settlers, in age and financial strength of the colonies, and in soils and environmental conditions.

The three colonies surveyed were settled by Mennonite farmers who had moved to Bolivia from Mexico in the late 1960s.

AT INITIATIVE: One Mennonite farmer and machinist, Peter Freisen, builds Aermotor-type windmills in his well equipped machine shop. (See Energy Sector Chapter AT Inventory for details). Freisen has not built windmills in the past two years because the heavy gauge galvanized sheet metal he uses for the rotor blades is not available. Freisen's design could provide a model for fabrication anywhere metal working skills and tools are available.

COMMENTS:

The colonists employ a great deal of appropriate technology and demonstrate what can be accomplished technically. Nevertheless, their impact on AT in Bolivia and the possibility of their transferring their technologies in general is doubtful in Harvey Newton's opinion for the following reasons:

- Their farming traditions are very old.
- Their work habits are well established.
- The Mennonite community is a very close one, with an established tradition of mutual assistance.
- Several of the Mennonite farmers, if not most of them, are excellent mechanics.
- The Mennonite colonies have several well equipped mechanic shops, which can not only repair farm machinery, but can produce such factory-like farm machinery as 4-row corn planters, hammer mills for grinding feed, blowers, elevators, windmills, power take-off for windmills, and many other farm and household machines.

- While the colonies use animal traction extensively for transportation, their farm operations would be almost the same if all animal traction was eliminated. Their mainstay for tilling the soil is tractors.
- The Mennonites have a large investment in farm machinery.
- Very few Bolivians who have the amount of capital available that is represented by the Mennonites' machinery park will do their own farm work, and most probably would not even live on the farm. Most Bolivians who have the capital resources would consider the return on capital too low if used in farming. Those Bolivians who would be interested in farming the way the Mennonites farm lack capital.

Nevertheless, the Mennonite Central Committee's effort sponsoring a group of volunteers to try to transfer some of the technology from the Mennonite colonies to the general Bolivian farming sector is praiseworthy and should be supported.

Another lesson drawn from the Mennonite experience is that village blacksmith shops, as suggested and described elsewhere in this report, might be a way to introduce AT into the campesino sector of Bolivian agriculture.

PRIVATE BUSINESSES

PRIVATE BUSINESSES SURVEYED:

HANSA, LTDA.

HILLER S.A.

HIMESUR, LTDA.

METISA BOLIVIA, LTDA,

SOLBOL

Sector	
AGRICULTURE	[ ]
SMALL SCALE INDUSTRY/ARTISANRY	[ ]
WATER & SANITATION	[ ]
ENERGY	[X]

AT Initiative	Present	Potential
Research	[ ]	[ ]
T/A Demonstration	[ ]	[ ]
Manufacture/Construction	[X]	[X] *Sales
Dissemination/Training	[ ]	[ ]

NAME: HANSA, LTDA.

MAILING ADDRESS: Casilla 1402
La Paz, Bolivia

PHONE: 353661

CONTACT: Ing. Jose Ernesto Melgarejo, Mechanical Engineer

INSTITUTIONAL SUMMARY: Hansa distributes small gasoline and diesel generators and pumps. The following lists representative prices:

Make	Size/Type	Price, US$
Sachs/ Bosch	3kva generator	2,000
Briggs/ Bosch	1.5 kva generator	1,350
Briggs and Stratton engines	16 hp	575
	10 hp	480
	8 hp	260
	5 hp	160
Hidrostal (Peru)	5 hp, 220 v centrifugal pump	275
Gould	3/4 hp, 220 v centrifugal pump	290
	.75 hp, deep well submerged pump	550
Seimens	2 hp, 220 v centrifugal pump	500
Briggs and Stratton	16 hp, centrifugal gasoline pump	1,900

Sector	
AGRICULTURE	[X] *
SMALL SCALE INDUSTRY/ARTISANRY	[ ]
WATER & SANITATION	[ ]
ENERGY	[ ]

AT Initiative	Present	Potential
Research	[ ]	[ ]
T/A Demonstration	[ ]	[ ]
Manufacture/Construction	[ ]	[ ]
Dissemination/Training	[ ]	[ ]

NAME: HILLER S.A.

OFFICE ADDRESS: Santa Cruz

CONTACTS: Hans Hiller, General Manager and Owner
Ing. Agr. Schulmeier, Field Representative

INSTITUTIONAL SUMMARY: This company is an importer of agricultural machinery and other imports needed in agricultural production. Not surprisingly they are not very disposed to AT. They claim that they bought equipment for animal traction, but no one would ever buy it, and it sat around for years in their warehouse. They claim that the true aim of small farmers is to have a tractor. However, while failing to produce convincing economic data on tractors, they depreciate data on the economics of animal traction as "theoretical studies".

They sell a 16 hp tractor for US$6,000 and a 36 hp tractor for US$10,000. According to them the 36 hp tractor sells very well and is economical to use by farmers who have only 3-4 ha of tomatoes. It also sells well to potato growers in the Altiplano.

According to them, there is a tremendous amount of farm machinery in the Department of Santa Cruz and elsewhere in the country whch is not used because it broke down and has not been repaired.

They consider the main bottleneck to mechanization to be the lack of credit to the small farmer.

COMMENTS:

Their views are not surprising considering they are a commercial organization selling farm machinery and implements.

Underutilization of a huge investment in farm machinery is a common occurence in developing countries, where preventive maintenance is generally considered waste and the lack of qualified people to maintain or recondition farm machinery is tremendous.

*Sales

Sector	
AGRICULTURE	[ ]
SMALL SCALE INDUSTRY/ARTISANRY	[ ]
WATER & SANITATION	[ ]
ENERGY	[x]

AT Initiative	Present	Potential
Research	[ ]	[ ]
T/A Demonstration	[ ]	[ ]
Manufacture/Construction	[x]	[x] *
Dissemination/Training	[ ]	[ ]

NAME: HIMESUR, LTDA.

OFFICE ADDRESS: Charcas 335-7
Santa Cruz, Bolivia

PHONE: 22077

CONTACT: Juan Galvez, Owner

INSTITUTIONAL SUMMARY: Himesur, Ltda., represents several Argentine manufacturers of windmill water pumps, including Aermotor, Sampson, Huracan, Justo and Guanaco.

In the past five years owner Galvez estimates he has sold 50-60 windmills, mostly to Mennonite colonists.

He blames inexpensive gasoline motor pumps for the low volume of sales, and feels that the lack of credit to cover the high capital cost of a wind system (US$1,200 installed) is a prime barrier to sales.

*Sales

Sector	
AGRICULTURE	[X]
SMALL SCALE INDUSTRY/ARTISANRY	[ ]
WATER & SANITATION	[ ]
ENERGY	[ ]

AT Initiative	Present	Potential
Research	[ ]	[ ]
T/A Demonstration	[ ]	[ ]
Manufacture/Construction	[ ]	[X] *
Dissemination/Training	[ ]	[ ]

NAME: METISA BOLIVIA, LTDA.

MAILING ADDRESS: Casilla 1939
Santa Cruz, Bolivia

OFFICE ADDRESS: Parque Industrial
Santa Cruz, Bolivia

INSTITUTIONAL SUMMARY: The only Bolivian made handtool found in hardware stores inspected was a regular spade made by Metisa Bolivia, Ltda. Bolivia has no steel industry at present. Metisa imports metal plates to manufacture spades and other handtools. The handles used by Metisa are of local manufacture. The company produces at present several types of spades, two types of lighter hoes and a heavy hoe (azedon). They state they intend to produce wheelbarrows, garden push carts, small hand spades for gardening and machetes. No other tool making company was visited in the AT survey, though claims were made that another existed.

* Sales

Sector	
AGRICULTURE	[ ]
SMALL SCALE INDUSTRY/ARTISANRY	[X]
WATER & SANITATION	[ ]
ENERGY	[X]

AT Initiative	Present	Potential
Research	[X]	[X]
T/A Demonstration	[X]	[X]
Manufacture/Construction	[X]	[X]
Dissemination/Training	[ ]	[ ]

NAME: SOLBOL

MAILING ADDRESS: Casilla 1303
Santa Cruz, Bolivia

OFFICE ADDRESS: Av. Mons Rivero esq. Castenlenao
Santa Cruz, Bolivia

PHONE: 23139

CONTACT: Bernardo Lavintman, Manager

INSTITUTIONAL SUMMARY: SolBol is a private concern building solar water heaters. They have sold over 300 of these since starting business less than a year ago.

SolBol manufacturers solar domestic hot water heaters which use a flat plate, convective flow design. A technical description of this system is reported in the Energy Sector Chapter AT Inventory. Two systems are offered, an 80 liter system with one collector for US$400 and a 150 liter system with two collectors for $750.

Sol Bol has been in business for less than one year and reports a poor market. Sol Bol has 12 employees who are skilled in all phases of fabrication including welding, soldering, painting and pressure testing.

AT INITIATIVE: SolBol heaters are described in the ENERGY AT INVENTORY, CURRENT AT IN ENERGY (above, Chapter Six).

REFERENCES CITED

Agency for International Development, Latin America and the Caribbean Development Resources. Bolivia Project Paper Rural Development Planning (Project No. 511-0471, LAC/DR no. 78-10). Washington, D.C.: AID/LAC/DR May 5, 1978.

Agency for International Development, Bolivia Mission. Bolivia Health Sector Assessment. La Paz, Bolivia: AID/La Paz, 1975.

AMARU IV Cooperative, Inc. Appropriate Technology for the Bolivian Campesino: A Background Social Feasibility Study (AID Contract No. 511-193T). Washington, D.C.: AMARU IV, November 1979.

Blake, Steve. Appropriate Energy Technologies in Bolivia (Draft Report prepared for Agency for International Development/La Paz under Contract No. 511-179T). Mt. Ranier, Maryland: Volunteers In Technical Assistance, December 1979.

Blake, Steve. Site Selection and Evaluation Handbooks for Wind Energy Systems. Oskaloosa, Kansas: Sunflower Power Company, 1979.

Branch, Diana S. Tools for Homesteaders, Gardeners, and Small Scale Farmers. Emmaus, Pennsylvania: Rodale Press, Inc. and Intermediate Technology Publications, Ltd., 1978

NOTE: Some figures in the Suggested AT in Agriculture for Transfer to Bolivia, Chapter Three, were adapted and redrawn from photographs or drawings in Branch 1978.

Brockman, Carlos. Mapa de Cobertura y Uso Actual de la Tierra, Bolivia. La Paz, Bolivia: GEOBOL, n.d.

Corporacion Regional de Desarrollo de Santa Cruz. Identificacion de Proyectos de Area (Mimeo). Santa Cruz, Bolivia: CORDECRUZ, July 1979.

Centro Para el Desarrollo Social y Economico. Centro Para el Desarrollo Social y Economico (Publicity Report). Cochabamba, Bolivia: DESEC, 1979.

Development Associates, Inc. A System for Evaluating the Economic and Social Impact of Rural Electrification in Bolivia (Report to Agency for International Development/La Paz). Washington, D.C.: Development Associates, Inc., 1976.

Direccion Nacional de Electricidad. Industria Electrica: Informacion. La Paz, Bolivia: Ministerio de Energia e Hidrocarburos, DINE, 1978.

Farallones Institute. Farallones Institute Composting Privy Manual. Occidental, California: Farallones Institute, n.d.

Freeman, Peter H. (editor). Environmental Profile of Bolivia: A Field Reconnaissance (Draft Report prepared for Agency for International Development/La Paz under Contract No. PDC-C-Q247. McLean, Virginia: JRB Associates, Inc., December 1979.

Frost, Wayne W. Appropriate Technology for the Bolivian Rural Artisans and Their Industries (Draft Report prepared for Agency for International Development/La Paz under Contract No. 511-179T). Mt. Ranier, Maryland: Volunteers In Technical Assistance.

Graber, Ken. Comparacion de Gastos entre Distintos Tipos de Mecanizacion en la Zona de Santa Cruz, Bolivia. Santa Cruz, Bolivia, February 1979.

Hatch, John. Social Feasibility Analysis, Village Development Loan Project Paper (Agency for International Development/La Paz Project Paper). La Paz, Bolivia: Agency for Internat. Development, 1978.

Instituto Nacional de Electrificacion Rural. Aprovechamiento de la Energia Solar, Altiplano Boliviano. La Paz, Bolivia: Ministerio de Energia e Hidrocarburos, INER, 1978.

Jeffries, E.F. Aprovechamiento de la Solar. La Paz, Bolivia: United Nations, 1977.

Journey, Tim, Tom Roach and Paul Skillicorn. Purnea Rural Water and Sanitation Project; Purnea Water and Sanitation Project Annexes (Rough Draft, Photocopied, Paperbound). Washington, D.C., July 1979.

King, B.F. Farmers of Forty Centuries. Emmaus, Pennsylvania: Rodale Press, 1978

Kroschel, Max Lawrence. Owner Built Compost Toilets in California (Proceedings of the Fourth Annual Conference on On Site Waste Water Alternatives). Ann Arbor, Michigan: Nationa Sanitation Foundation, 1978.

Kroschel, Max Lawrence. Appropriate Water and Sanitation Technologies for Bolivia (Draft Report prepared for Agency for International Development La Paz under Contract No. 511-179T). Mt. Ranier, Maryland: Volunteers in Technical Assistance, December 1979.

Lovshin, L.L.. Survey of Fish Culture Potential in the San Julian and Alto Beni Colonization Projects of Bolivia (Agency for International Development Control No.: PN-AAF-105 prepared under Contract No. CSD-2780 211d). 1977

McAnany, Emile G. Radio Schools in Non-Formal Education: An Evaluation Perspective. Agency for International Development Control No. DN-AAB-313 prepared under Contract No. AID/ta-G-1053 211(d)). Stanford, California: Institute for Communications Research, June 1974.

Mennonite Central Committee. Well Drilling. Santa Cruz, Bolivia: Mennonite Central Committee, n.d.

Nelson, Michael. The Development of Tropical Land: Policy Issues in Latin America. Baltimor Maryland: Johns Hopkins University Press/Resources for the Future.

Newton, Harvey P. Some Aspects of Appropriate Technology for Agriculture in Bolivia (Draft Report prepared for Agency for International Development/La Paz under Contrac 511-179T). Mt. Ranier, Maryland: Volunteers in Technical Assistance, December 1979.

O'Conner, Craig. Wind Power for the Northern Altiplano Region of Bolivia (Master's Thesis). Pomona, California State Polytechnic University, 1979.

Ramirez, Mario, F.A. and W.W.S. Charters. Survey of Solar Energy and Wind Energy in Bolivia. La Paz, Bolivia: United Nations, 1975.

Science and Technology Divison, Library of Congress. Environmental Report on Bolivia (Draft) Washington, D.C.: Library of Congress, June 1979.

Servicio Nacional de Meteorologia e Hidrologia. Annuario Meteorologico, 1975. La Paz, Bolivia Ministerio de Transportes y Comunicaciones y Aeronautica Civil, 1976.

Technical Assistance Information Clearing House (TAICH). Country Report-Bolivia Development Assistance Programs of United States Non-Profit Organizations. New Yor New York: Council of Voluntary Agencies for Foreign Service, Inc., July 1978.

United States Navy and United States Air Force. N-Summaries of World-wide Meteorological Data. Asheville, North Carolina: United States Department of Commerce, 1979.

Urban Resource Consultants. Regional Technologies Opportunities, Bolivia, Field Visit Report to USAID/La Paz. Washington,D.C.: Urban Resource Consultants, 1979.

Van Buren, J.F.J.. Soil Fertility and Sewage. London, England: Faber and Faber, Ltd., 1948.

Volunteers In Technical Assistance. Solar Grain Dryer (Stock No. 54 E). Mt. Rainier, Maryland: Volunteers In Technical Assistance, n.d.

Wagner, E.G. and J.N. Lanoix. Excretia Disposal for Rural Areas and Small Communities. Geneva, Switzerland: World Health Organization, 1958.

World Bank, Department of Transportation, Water and Telecommunications. Appropriate Sanitation Alternatives: A Field Manual (Draft in progress). Washington,D.C.: The World Bank, n.d.

NOTE: The working draft of the Appropriate Sanitation Alternatives was the source for a series of figures in Chapter Five, AT Water and Sanitation Inventory, Suggested AT in Water and Sanitation for Transfer to Bolivia: V-12 through V-22. These figures may contain technical inaccuracies. In the latest draft of this field guide, these diagrams have been redrawn. Please consult the World Bank Department of Transportation, Water and Telecommunication's February 1980 draft for further information.

World Bank, International Bank for Reconstruction and Development/ International Development Association. Appraisal of Ingavi Rural Development Project,Bolivia (Report No. 936-BO). Washington,D.C.: The World Bank, February 5, 1976.

World Bank, Projects Department, Latin American and Caribbean Regional Office. Staff Appraisal Report, Bolivia: Omasuyos-Los Andes Rural Development Project (Report No. 2475-BO). Washington,D.C.: The World Bank, May 24, 1979.

World Bank, International Bank for Reconstruction and Development/ International Development Association. Appraisal of Ulla Ulla Development Project, Bolivia (Report No. 1708a-BO). Washington,D.C.: The World Bank,December 27, 1977.