BIBLIOGRAPHIC DATA SHEET

1. CONTROL NUMBER
PN-AAH-491

2. SUBJECT CLASSIFICATION (695)
LD00-0000-G140

3. TITLE AND SUBTITLE (240)
Kenya shelter sector study and AID's experience

4. PERSONAL AUTHORS (100)

Jorgensen, N. O.

5. CORPORATE AUTHORS (101)

6. DOCUMENT DATE (110)
1979

7. NUMBER OF PAGES (120)
247p.

8. ARC NUMBER (170)
KE301.54096762.A288

9. REFERENCE ORGANIZATION (130)
DS/H

10. SUPPLEMENTARY NOTES (500)

(Study Team report prepared in cooperation with USAID/Kenya)

11. ABSTRACT (950)

12. DESCRIPTORS (920)

Kenya
Urban development
Mortgage
Urbanization
Housing
Rural areas
Finance
Sector analysis
Projects

13. PROJECT NUMBER (150)

14. CONTRACT NO.(140)
DS/H

15. CONTRACT TYPE (140)

16. TYPE OF DOCUMENT (160)

AID 590-7 (10-79)

PN-AAH-491

KE
301.54096762
A288

Kenya Shelter Sector Study and AID's Experience

August 1979

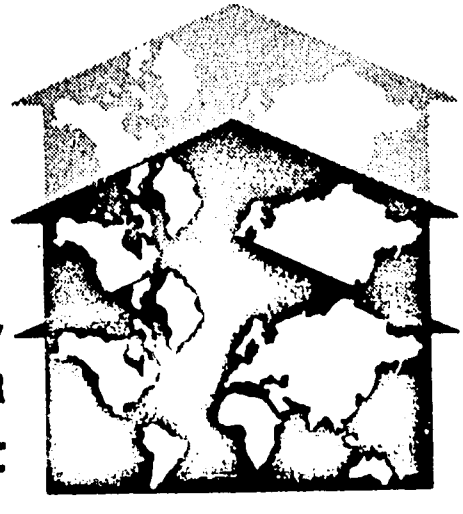

AGENCY FOR INTERNATIONAL DEVELOPMENT

OFFICE OF HOUSING

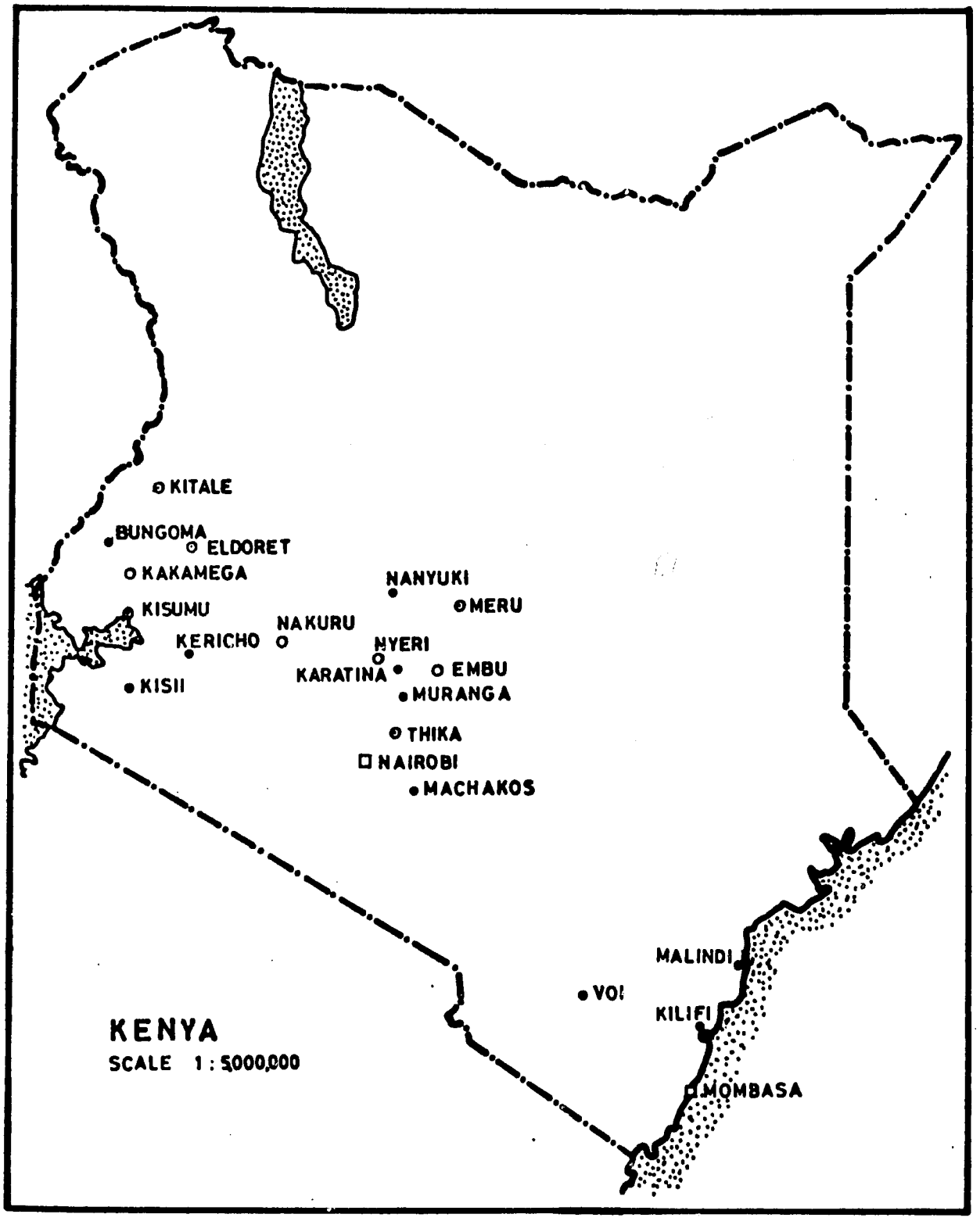
KITALE
BUNGOMA
ELDORET
KAKAMEGA
NANYUKI
MERU
KISUMU
NAKURU
KERICHO
NYERI
KARATINA
EMBU
KISII
MURANGA
THIKA
NAIROBI
MACHAKOS
MALINDI
VOI
KILIFI
MOMBASA
KENYA
SCALE 1 : 5000,000

UNITED STATES OF AMERICA
AGENCY FOR INTERNATIONAL DEVELOPMENT
REGIONAL HOUSING AND URBAN DEVELOPMENT OFFICE

UNITED STATES POSTAL ADDRESS
NAIROBI (ID)
DEPARTMENT OF STATE
WASHINGTON, D. C., 20520

INTERNATIONAL POSTAL ADDRESS
POST OFFICE BOX 30261
NAIROBI, KENYA

FOREWORD

This study of the urban and rural shelter sector in Kenya is supplemented by an evaluation of AID's experiences in this sector. It was conducted by a team of consultants headed by Nils O. Jorgensen and included Michael Lee and Mark Jansen, independent consultants, and Shem Migot-Adholla of the University of Nairobi. Research assistance was provided by Jeremy Hagger of the University's Housing Research and Development Unit. Background information was provided by Jobson Ngari of the AID Regional Housing and Urban Development Office. Government of Kenya officials were kept apprised of the progress of the study and participated in certain aspects.

The purpose of the study was to assess shelter developments in Kenya over the past ten years and to assess the current situation. In addition the study was to evaluate the impact of AID's Housing Guaranty Program during this period. Finally, the study was to include general recommendations in the shelter sector and to draw lessons from and to make recommendations concerning the Housing Guaranty Program.

The study was conducted during the first six months of 1979.

Although AID and Government of Kenya officials participated in the review of drafts of the study, the findings and recommendations are the responsibility of the Study Team headed by Mr Jorgensen. The study, therefore, does not represent an official position nor is it specifically endorsed by either the Agency for International Development or the Government of Kenya.

We hope, however, that the Government of Kenya and others interested in the development of the shelter sector in Kenya and in other developing countries will find the information, lessons learned and recommendations contained in the report of use in planning future programs. It is certain that AID will benefit in this regard.

Donald A. Gardner
Assistant Director
for East and Southern Africa
Office of Housing

Chapter I

SUMMARY REPORT

		Page
1.	Introduction	5
2.0.	Overview of Housing Policies	5
2.1.	Past and Present	
2.2.	Recommendations	
3.	The Urban Shelter Sector including AID's Experience	10
3.1.	Urbanization Trends	
3.2.	Present Housing Situation	
3.3.	AID Projects	
3.4.	Lessons and Recommendations	
4.	Housing Finance in Kenya	20
4.1.	Overview	
4.2.	Savings Mobilization	
4.3.	Institutional Mechanisms	
4.4.	Beneficiaries and Terms	
4.5.	Constraints and Recommendations	
5.	Rural Shelter in Kenya	27
5.1.	The Needs	
5.2.	Constraints and Recommendations	

Chapter II

THE URBAN SHELTER SECTOR INCLUDING AID'S EXPERIENCE

		Page
1.0.	Introduction and Summary of Conclusions and Recommendations	31
2.0.	The Economic Growth of Kenya	35
2.1.	Production	
2.2.	Employment	
2.3.	Earnings and Income	
3.0.	Urbanization Trends	39
3.1.	Urban Growth	
3.2.	Migration	
3.3.	Consequences of Migration	
3.4.	Squatter Settlements	
3.5.	Local Authorities	
3.6.	Urbanization Policies	
4.0.	The Housing Situation 10 Years ago	44
4.1.	Policy Statements	
4.2.	Institutions	
4.3.	The Informal Market	
4.4.	Housing Performance	
5.0.	The Present Housing Situation	49
5.1.	Policies and Policy Instruments	
5.2.	The Public Housing Sector	
5.2.1.	Cost Recovery and Subsidization	
5.2.2.	Allocation	
5.2.3.	Building Standards	
5.2.4.	Zoning	
5.2.5.	Land Purchase	
5.2.6.	Rent Control	
5.2.7.	Taxation	
5.2.8.	Slums and Demolotion	
5.3.	The Building Industry	
5.4.	Institutions and Their Performance	
5.5.	The Private Housing Sector	
5.5.1.	Employer-provided Housing	
5.6.	Ongoing Projects	
5.6.1.	U.S. Agency for International Development	
5.6.2.	The World Bank First Urban Project	
5.6.3.	The World Bank Second Urban Project	
5.6.4.	The European Development Fund Project	
5.6.5.	Commonwealth Development Corporation	
5.6.6.	Other International Organisations	
5.7.	Housing Cooperative Societies	
5.8.	Strengths and Weaknesses of the Present Situation	
6.0.	The Next Five Years	72
6.1.	The 1979-83 Development Plan	
6.2.	Locational Policies	
6.3.	Urban Shelter Studies	
6.4.	Program and Policy Gaps, Proposals for Action.	

		Page
7.0.	The AID Experience	79
7.1.	Overview	
7.2.	Kimathi Estate (001)	79
7.2.1.	Objectives	
7.2.2.	Reasons for the Project	
7.2.3.	Description of the Project	
7.2.4.	Financing Terms and Cost	
7.2.5.	Target Population and Selection Methods	
7.2.6.	Institutional Arrangements	
7.2.7.	Problems Encountered	
7.2.8.	Present State of the Project	
7.2.9.	Achievement of Objectives	
7.3.	Kenya Canners (002)	87
7.3.1.	Objectives	
7.3.2.	Reasons for Proposing to Undertake the Project	
7.3.3.	Description of the Project	
7.3.4.	Costs and Financing Terms	
7.3.5.	Target Population and Selection Method	
7.3.6.	Institutional Arrangements	
7.3.7.	Why Request for Financing was Dropped	
7.4.	Umoja Estate (003)	93
7.4.1.	Objectives	
7.4.2.	Reasons for the Project	
7.4.3.	Description of the Project	
7.4.4.	Cost and Tendering	
7.4.5.	Financing Terms	
7.4.6.	Target Population	
7.4.7.	Institutional Arrangements	
7.4.8.	Selection System	
7.4.9.	Community Facilities	
7.4.10.	Present State of the Project	
7.4.11.	Achievement of Objectives	
7.5.	National Housing Corporation (004)	110
7.5.1.	Objectives	
7.5.2.	Reasons for the Project	
7.5.3.	Description of the Project	
7.5.4.	Cost and Financing Terms	
7.5.5.	Target Population and Selection Procedures	
7.5.6.	Institutional Arrangements	
7.5.7.	Problems Encountered	
7.5.8.	Achievement of Objectives	
7.5.9.	Present State of the Project	
7.5.10.	Conclusions	
7.6.	Lessons Learned	132
7.6.1.	Nature of Projects	
7.6.2.	Target Population and Selection Procedures	
7.6.3.	Tendering Procedures	
7.6.4.	Implementation	
7.6.5.	Institutional Arrangements	
7.6.6.	Cost Recovery	

Chapter III

HOUSING FINANCE IN KENYA

		Page
1.0.	Introduction and Summary	143
1.1.	Context of study	
1.2.	Extent of study	
1.3.	Summary of conclusions and recommendations	
2.0.	The Financial Sector	151
2.1.	Level of economic development	
2.2.	Level of financial infrastructure	
3.0.	Growth of Institutional Framework	157
3.1.	The private sector	
3.1.1.	Commercial Banks	
3.1.2.	Non-bank financial institutions	
3.1.3.	Other financial institutions	
3.1.4.	Savings and Credit Societies	
3.1.5.	The Stock Exchange	
3.2.	The public sector	
3.2.1.	The Central Bank	
3.2.2.	Central Government Finance	
3.2.3.	Local Government Finance	
3.2.4.	National Social Security Fund	
3.2.5.	Parastatal Bodies and Others	
4.0.	Housing Finance	171
4.0.1.	Characteristics of Housing Finance in Kenya	
4.1.	Public Sector Housing Finance	
4.1.1.	Ministry of Housing and Social Services	
4.1.2.	Other direct participation by the Central Government	
4.1.3.	The National Housing Corporation	
4.1.4.	Local Authorities	
4.2.	Private Sector Housing Finance	
4.2.1.	Housing Finance Company of Kenya	
4.2.2.	Savings and Loan Kenya Ltd.	
4.2.3.	East African Building Society	
4.2.4.	The Cooperative Bank of Kenya	
4.2.5.	Kenya Commercial Bank (Farmers' Housing Loans)	
4.2.6.	Terms and Criteria	
4.2.7.	Profitability and Operating Costs	
4.2.8.	Employers housing finance	
4.2.9.	Housing Cooperative Societies	
4.2.10.	Housing Companies	
5.0.	Constraints on the Expansion on Housing Finance	188
5.1.	Supply Constraints	
5.2.	Demand Constraints	
6.0.	Recommendations	190
7.0.	Statistical Appendix	194

Chapter IV

RURAL SHELTER SECTOR

		Page
1.	Introduction and Summary	200
1.1	Outline of Chapter	
1.2	Summary of Conclusions	
1.3	Summary of Recommendations	
2.	The Present Rural Setting	204
2.1	Demographic Trends	
2.1.1	Population Movements	
2.1.2	Rural Household Profile	
2.2	Settlement and Shelter Characteristics	
2.2.1	Settlement Patterns	
2.2.2	Rural Homesteads	
2.2.3	Settlement Villages and Agro-industries	
2.2.4	Intermediate Level Centers	
3	Present Programs and Policies	215
3.1	Policies	
3.1.1	Rural Development Policies	
3.1.2	Land Tenure Policies	
3.1.3	Rural Shelter Policies	
3.1.4	Locational Policies	
3.2	Institutions	
3.2.1.	Ministry of Housing and Social Services	
3.2.2	National Housing Corporation	
3.2.3	Karen Village Technology Unit	
3.2.4	University of Nairobi	
3.2.5	Village Polytechnics	
3.2.6	Cooperative and Self-help Societies	
3.2.7	Kenya Commercial Bank	
3.2.8	Institute of Cultural Affairs	
4	The Role of Rural Shelter	224
5	The Next Five Years	226
5.1	The 1979-1983 Development Plan	
5.2	Needs and Constraints	
5.3	Recommendations for Action	
Annexes	I The Settlement Village and Agro-industries, two case studies	
	II Revised Conditions for Granting Housing loans to individuals in rural areas (NHC)	

SUMMARY REPORT

1. Introduction

The Kenya Housing Study was commissioned in January of 1979 and the terms of reference called for four reports:

I Summary Report

II The Urban Shelter Sector including AID's Experience

III Housing Finance in Kenya

IV Rural Shelter in Kenya

The purpose of the Study was to "evaluate the impact of the Housing Guaranty Program in Kenya over the past ten years, to assess the present shelter situation and to make recommendations concerning future developments in the sector."

The basic approach in each of the three reports has been to analyse developments since Kenya's independence in 1963 which for obvious reasons marked a major turning point for the shelter sector as for most other sectors. Emphasis in the analysis has been on the institutional framework, both public and private, which is responsible for housing policy formulation and for implementation of that policy. In particular, any shift in policy which can be ascribed to the Housing Guaranty Program or to other major developments, planned and unplanned, has been given special attention. Lessons learned from these experiences have been given prominence in the recommendations contained in each of the reports and in this summary.

Each of the three main reports, in fact, starts with its own "Summary of Conclusions and Recommendations" and should be referred to for elaboration of this Summary Report. References will also be necessary to the main text when more detailed information is needed.

Even though the terms of reference joins the "Urban Shelter Sector" with "AID's Experience", it will be noted that separately they are of about the same length as either of the other two reports.

This reflects the depth to which AID projects have been analysed and complies with the terms of reference.

2. Overview of Housing Policies

2.1. Past and Present

Towards the end of the last decade the national housing policy was still somewhat embryonic. It was being shaped, inter alia, by the report of a UN Mission commissioned just after Independence and by a Government Sessional Paper (No. 5) and, subsequently, by resulting parliamentary and public debate.

The 1964 UN Mission report by Bloomberg and Abrams was quite clear in suggesting a policy for dealing with the scale of the problem. They stated that "the resources that can be devoted to housing in Kenya will not in the foreseeable future permit housing of permanent construction in urban areas either of sufficient quantity or without subsidy, within the means of a vast number of families....Without the means to do otherwise, the only alternative is to attempt to control temporary housing and to make it conform as far as possible to a plan by which it will eventually be replaced when families can afford it."

Kenya, at its independence, had inherited a housing stock which on the whole was of fairly good standard but totally inadequate in view of the shifts in urban population just proceeding and immediately after independence, namely a limited exodus of higher income expatriates from major urban areas and a large influx of lower income families from provincial towns and rural areas. The Sessional Paper No. 5 of 1966/67 noted that the urban housing situation had reached a "critical stage" and proposed urgent measures to deal with it. The paper reiterated the need for the development of self-help technique and went on to point out that "the mobilization of private capital for low-cost housing will be a significant part of the housing programme in urban areas..." One recommendation was that the old Central Housing Board should be reformed to accommodate functions wider than merely providing loans for housing to local authorities. This recommendation was taken up in Parliamentary debates, with suggestions that the new corporation should be more responsive to the needs of the poorer sections of the community.

Still, the formally-stated policy was that:

> " the prime objective of Government policy in housing is to move towards a situation where every family in Kenya will live in a decent home, whether privately built or state-sponsored, which provides at least the basic standards of health, privacy and security."

It was also admitted that "it will take at least several decades to approach such a goal."

So, although the recommendations at the time were surprisingly acute and perceptive the policy remained vague and unrealistic. Standards from colonial times were maintained for infrastructure as well as superstructure and, indeed, with respect to those who were entitled to staff housing although they were no longer expatriates. The cost of these housing units in some cases exceeded the affordability of the occupants. These units therefore had to be subsidized but the same was true of units for those who could well afford them. The result was a growing deficit of shelter, particularly for those at the lower end of the income scale. In turn, the illegal and uncontrolled settlements grew in size and density, thus becoming more difficult, politically, to remove and, technically, to improve.

In the Kenya context it is clear that both private and public sectors play a part in shaping housing developments. The study team considers this a strength of the present system. However, the balance struck between the two sectors has left the private sector mainly with the provision of very high and very low income housing and the team finds this not only undesirable but also inefficient from the point of view of mobilization and allocation of resources.

With limited resources at its disposal, the public sector has been able to complete just under 3000 units per year, as an average, compared with an increase of approximately 22,000 households each year in urban areas. The private sector has completed little more than 1000 high cost units in the same areas leaving the rest of the households to live in unauthorized structures or to increase the occupancy rates in the existing "decent" houses. Thus, the prevailing housing policy of striving for perfection touched only a small part of the population.

But warnings similar to those of Bloomberg and Abrams back in 1964 continued from many sides and although the policy objectives have not changed a number of changes in policy emphasis have been manifested over the last decade. The examples used in the main report are typically in that they are large projects mainly financed by foreign donor agencies. The shifts were towards site-and-service schemes, core housing and tenant-purchase units, all of which contained the feature of ownership as opposed to the traditional rental units. The change was characterized by a closer conformity of projects to policy, namely of actually providing the type of shelter which could be afforded by families lower down the income scale without large direct subsidies. More specicically, the first of the changes identified in the study is a concentration on shelter provisions for urban households between the 20th and 50th percentiles of the income distribution. Combined with ownership or tenant-purchase contracts these projects (Kimathi, BuruBuru, Umoja and Dandora) were extremely popular and have shown themselves to have market values at double or three times their cost prices, without direct subsidies of any significance.

A second policy change was a decisive effort to implement larger projects of the same nature outside Nairobi namely in some of the provincial towns such as Thika, Kisumu, Nakuru and Mombasa. The National Housing Corporation had for long been active in smaller towns, but it rarely sponsored schemes of the site-and-service and core house type.

There is no question in the team's mind that the magnitude of funds provided from outside sources such as AID and the World Bank have been very directly instrumental in supporting those elements in national and local government who were pressing on with demands for a more realistic approach to the Kenya housing problems. There were, and still are, other interest-groups who would like to see only projects of three and four bedroomed houses being provided by the public sector, but their motives and the sheer magnitude of funds required to make even a modest impact have reduced the influence of these groups.

In fact, the latest projects now being planned provide components of serviced sites only together with upgrading of squatter areas. This latter approach has finally recognized the right of existence of those living in unauthorized settlements. It is also a recognition of the fact that to remove them and demolish their illegal structures would add to - not reduce - the housing problem. With the provision of infrastructure and a reasonable lowering of densities plus provision of loans for shelter improvements these so-called squatters can improve their neighborhoods significantly at modest expense to the public sector and at the same time avoid a disruption of their social and economic relationships. Together with a proposed review of standards and building by-laws the squatter up-grading projects are possibly the most significant changes in policy emphasis since independence.

Site-and-service schemes have not been equally successful in all parts of the country, but investigations coucluded that it is not the concept but the implementation which is at fault. One encouraging fact in this respect, is the Government's determination to support housing cooperatives by a large budget allocation and to make loan funds available from the National Social Security Fund (see under finance) so that self-help groups with a common bond can pool resources and take advantage of these projects.

A final change, although not yet implemented, should be mentioned here because of its potential significance; namely, a review of the institutional capacity by means of a reorganisation of some of the main agencies in Kenya responsible for shelter delivery. These include in particular the National Housing Corporation and the major local authorities. Coordination of their activities with the plans and programmes formulated by the Ministry of Housing and Social Services should enhance the impact of projects financed by local as well as external funds.

Despite these advances considerable shortfalls continue to be experienced from one plan period to the other. Implementation has fallen short of targets, themselves well below actual needs. Available funds have not always been spent, other funds not mobilized, although the effective demand has been present at all times. The main reasons for this will be summarized in 3.5. of this report.

2.2. Recommendations

Since the private sector, formal and informal, has demonstrated its ability to mobilize resources and produce houses at both extremes of the cost scale and since the public sector clearly has had difficulties filling the gap in between, it is recommended that a number of action-oriented studies be undertaken which would lead to a more efficient and equitable use of available capacities, talents and other resources, particularly the strengthening of the public sector's planning and administrative functions. Some of these studies are listed in the 1979-83 Development Plan, but other studies should

concern themselves specifically with: impact of zoning controls, improved data collection of house construction, uniformity of cost recovery principles, the cost and benefits of subsidies, eligibility criteria for public housing, policies on subletting, delivery systems for the poorest sections of the community and for middle income employees, locational policies, infrastructural standards and the share of public finances devoted to housing for government employees as opposed to the public at large. Insofar as the present study had only a limited brief, no concrete recommendations have been made as to a desirable outcome of these studies, although some pointers have been provided.

A particular recommendation is for an analysis which should lead to a better definition of "target groups". Target groups have been stratified by income but location and type or place of employment should also be considered. Such an exercise does not require statistical precision, but will aid in the understanding of which groups require the most urgent assistance. The same exercise should then proceed to identify the roles of the various shelter agencies in catering for these groups. In this way gaps and overlaps in present policy implementation will be demonstrated and remedial action easier to institute. The undisputed major economic advantages of being allocated a publicly provided house has led the team to question the traditional criteria of income as a meaningful way of defining target groups, or whether public housing should always be provided at cost. Indeed, more will be said on this subject under 4.3. of this report.

The first report also makes recommendations concerning the role played by international aid organisations. The suggested guidelines over the next five years may be summarised as follows:

- Beyond the projects presently being planned there will be little capability in the public sector to undertake new completed units. Emphasis should therefore be placed upon servicing land for private sector construction or for speedier implementation of current public sector programs.

- If, however, needs and capabilities are ascertained for direct assistance, priority should be given to Kisumu and Eldoret, - possibly in the form of site-and-service plots in the former and settlement up-grading in the latter.

- All forms of assistance should encourage growth of self-reliance. This would encompass, among other things, support for the development of housing cooperatives, insistance on replicable projects, positive approaches to the generation of surplusses, and institutional support to smaller local authorities.

- Technical assistance should be offered to central government for the preparation of much more detailed policy statements on a number of issues ranging from rent control to the sale of existing public housing units.

However, even a coherent statement of policies does not assure their implementation. Some policies will be achieved through regulatory instruments, others by force of argument and conviction. It is therefore recommended that the principal foreign aid agencies agree with the Kenya Government on the framework within which all the major shelter projects be initiated. This recommendation, if followed, can achieve two major advances: (1) it can assure that all entities involved know about and support every step of the project with what this implies in terms of land availability, overall plans, budgets and administrative capacities; (2) it can bring about a more consistent adherence to policy objectives by using the leverage of large investments and by being seen to adhere to declared policy, it can influence attitudes nationwide.

More specific recommendations on future AID projects appear under 3.6. of this report.

3. The Urban Shelter Sector including AID's Experience

3.1. Urbanization Trends

In 1969 - the date of the most recent national population census - there were some 1 million people living in Kenya's urban areas (according to the local definition of an urban place being a settlement accommodating over 2000 people). This was 9.9% of the total population of the country. Using a cut-off point of 20,000 people as constituting an urban area, Kenya was 7.6% urbanized in 1969.

There had been a reported urban growth rate of 7.1% per annum from 1962. With a national growth rate of population of 3.5% annually - one of the highest in the world - 17.8 per cent of the total national growth between 1962 and 1969 had taken place in urban areas.

There were 48 urban places in Kenya in 1969 of which 11 had population exceeding 10,000, between them accommodating 926,000 people. Of the total urban population, 80% was located in Nairobi and Mombasa (47% and 23% respectively). Rather more than half of the urban growth is attributable to migration from rural areas. Migration is, like in most developing countries, predominantly of the young and educated males, often having friends or relatives already in the city, and expecting a better paying job there. This last factor is supported by the fact that urban wages averaged 270% of rural wages in 1969, falling to 239% in 1974. The number of job opportunities also have been increasing in the urban areas, combined with a growing pressure on agricultural land. An official paper on regional development strategies (1972) found that in 1970 one quarter of Kenya's population was living in rural areas at a density approaching or exceeding the carrying capacity of the land. Reference is made to this fact also in the report on Rural Shelter.

Kenya has experienced a reasonably good rate of economic growth since independence. GDP has been growing at a real rate of 5.3% annually with a substantial and increasing concentration of growth in the urban areas. The towns,

comprising little more than 10% of the country's population are doubling their population every 10 years. The population growth rate is, however, more rapid than that of formal sector jobs. The result has been an increase in urban poverty, which has manifested itself in many ways, one of them being the mushrooming shanty settlements, another being the growth of the so-called informal sector activities.

STATUS AND POPULATION GROWTH OF MUNICIPALITIES

	Designated Growth Centre	Population, '000 1969	1978	+% p.a.
Nairobi		509	959	7.3
Mombasa		247	401	5.6
Kisumu	*	57	115	8.0
Nakuru	*	47	78	5.7
Eldoret	*	18	47	11.1
Thika	*	23	47	8.0
Kitale	(*)	12	24	8.35
Kakamega	*	6	18	12.65
Nyeri	*	10	23	9.6
Embu	*	4	14	15.0
Meru	(*)	5	12	11.55
all municipalities		938	1,736	7.1

Note: Kitale and Meru were designated growth centres in the Development Plan 1974/78.

1969 populations from the Census Report.

1978 populations from "Urban Population Projections during 1969-2000", Ministry of Finance and Planning, October, 1974: 'low' projections for Nairobi and Mombasa; 'high' projections for all other municipalities.

3.2. Present Housing Situation

With municipal development expenditures having averaged only Shs 166 ($22) per capita annually over the past few years, local resources have been grossly insufficient to be able to accommodate all of the demands made upon them. Having been able to provide only a fraction of the yearly increase of about 22,000 households with homes, the private sector has been equally far behind in the provision of technical and social services which are an integral part of human settlements. The private sector, on the other hand, has been extremely active in construction of shelter often in unauthorized places, often for rental, and often well below the standards required by the local authorities.

Environmental conditions in these "squatter settlements" are a disturbing feature. The dwellings, whether shanties or over-crowded "decent" dwellings do offer a roof over the heads of the poor at a price they can afford, and, when sub-let offer often the only source of income to their owners. They are frequently found in locations more central than those offered by public housing schemes, thus being closer to formal sector jobs and to potential sources of informal income.

Because of an unclear distinction between what is legal and what is illegal and because of the difficulties involved in counting permanent residents in these housing units, there has been no comprehensive estimates of either the size or the growth rate of these squatter areas in Kenya. The most recent estimate is that 38 per cent of Nairobi's housing stock can be classified as unauthorized. Similarly, it is estimated that 40 to 45 per cent of Kisumu's population live in unapproved housing. In Mombasa, the same percentage is estimated to be near 50%.

Local authorities have at their command a gamut of controls over private house buildings: building standards, zoning controls, rent controls, various forms of taxation and, of course, the ultimate threat of demolition. The report notes how each of these controls have on the whole not been effective and, where applied, have often been counter-productive in stimulating the supply of "decent" housing. However, the controls are applied only to a relatively small proportion of new units constructed.

The policies, as spelled out in the Third Development Plan, had recommended that "rural housing be left primarily to private and self-help efforts which, to date, have been adequate to maintain the number of units required if not to improve on their size or to increase their amenities." Thus government efforts have largely been concentrated in the urban areas. The main target group has been the urban poor, since "it is the Government's policy to direct a large proportion of funds available to the provision of housing for the low income groups".

This policy was to have been implemented by way of a directive that all new public housing units (with the exception of that provided by Housing Finance Company of Kenya and for specific groups of government employees) should cost under Shs 24,000. (It was subsequently noticed by the General Manager of the National Housing Corporation that these targets were "never possible of achievement"). On the question of tenure the Ministry of Housing and Social Services issued a Directive in 1973 that "90% of all available Government funds should go to site and services or some form of aided low-cost housing and only 10% be used for rental schemes".

The emphasis on site and service development has been supported by all public statements, but has been slow in implementation. The main reasons for this have been the lack of administrative capacity, of land, and of coordination between the NHC and the local councils.

The report on Urban Shelter has listed the major problems involved in implementing the housing policy as: Cost recovery and the degree of subsidization; allocation of houses to beneficiaries; building standards required and land availability. Rent control is briefly mentioned as being a policy instrument which has totally failed whereas taxation and rating is increasingly used to recover cost of infrastructure and administrative cost of housing projects. The substantive report also lists all of the major institutions involved in the provision of housing and comments on their performance.

Apart from the AID projects there are major shelter projects under way financed by the World Bank, the Commonwealth Development Corporation and the European Development Fund. All of these projects receive detailed analysis in the report and the conclusion is that not only have they, collectively, been instrumental in bringing about the shift in policy emphasis but also introduced new approaches in the areas of design (expandable units) lay-outs (incorporating community and employment facilities), construction (pre-fabricated core units) and in allocation and cost recovery principles.

Given the limited volume of public resources the realisation has grown of the impossibility of achieving, within a foreseeable future, the stated aim of housing the urban population in "decent" dwellings as these are officially defined. The Government's plans are therefore tempered to aim over the medium and short term at assisting those groups least able to provide their own accommodation, and by an acceptance that - given a choice - it is preferable to go for quantity rather than quality of housing units. Nevertheless, the performance has not been meeting even the modified objectives with regard either to number of units constructed or to unit costs. Plans are still put forward which are known to be incapable of realisation. These difficulties are far from exclusively a result of being a poor and rapidly urbanizing country. Many constraints could be obviated with sufficient committment and foresighted planning. These constraints are dealt with throughout the substantive reports ranging from those mentioned above to those of skills, finance and availability of building materials. Recommendations are offered in each of the reports, but one main conclusion in this respect is that the public sector is simply overburdened by the many ongoing programmes of construction and management so that if more new projects were given to private sector entities to execute and administer, more time and capacity would be available in the public sector to plan, coordinate and finance.

3.3. AID Projects

For the sake of this report four AID projects have been enumerated, although only three came to fruition financed through the AID Housing Guaranty Program. The fourth is included because it was significant at the time of negotiations. The project was subsequently built and financed by a major industrial employer.

The first of the HG projects was Kimathi Estate Nairobi (001) negotiated in 1966, then came the abandoned Kenya Canners project in Thika (002) negotiated in 1972. After that, in 1973,

two projects were simultaneously negotiated, namely Umoja Estate, Nairobi (003) and a project with the National Housing Corporation involving 12 provincial towns (004).

In the substantive report all of the projects are described in detail according to the following format: Objectives, Reasons for the Project, Description of the Project, Cost and Financing Terms, Target Population and Selection Methods, Institutional Arrangements, Problems Encountered, Present State of the Project and Achievement of Objectives. In this summary report we shall briefly describe each of the four projects but otherwise concentrate on the lessons learned and the recommendations for future AID HG projects.

3.3.1. Kimathi Estate (001) is a medium income housing project consisting of 87 four-roomed and 256 five-roomed units four miles east of the centre of Nairobi in a relative densely populated rental housing area. The project, which was tenant-purchase, was very popular from the start. The total cost for each of the two types were Shs 41,500 and 46,000 respectively and there were no specific income criteria other than that of being able to pay the deposit of a little over Shs 2,000/-and monthly payment of Shs 348/-and Shs 385/- (depending on house size). This effectively ruled out the lower income groups at the time, but this was recognized by both AID and the Nairobi City Council, the implementor. The primary purpose was to introduce tenant purchase schemes to Nairobi. The funds were provided at a composite rate of 8.5% over 20 years although purchasers could opt for a shorter time to repay (at considerably higher monthly amounts). Many opted for 10 and 15 years mortgages.

Applications were collected by NCC but processed by the Housing Finance Company of Kenya which retained Shs 150 out of an application fee of Shs 200. The brochure of the scheme clearly stated that it was intended for owner-occupation, but here, as in practically all similar schemes, sub-letting is high. It is currently being reported at about 50%.

To the extent that this housing development was constructed within the budget, occupied expeditiously and with exceedingly low default ratios (arrears are less than 5% of total loan balance) economic development and social progress have definitely been achieved. To NCC the first experience with an AID HG project, Kimathi Estate, provided a useful addition to the housing stock and to the tax base, as well as to a set of procedures and legal devices that were used in similar projects afterwards.

The original allottees of Kimathi Estate have good reasons to be satisfied with their investment, for the houses now change hands at KShs 160,000 and Shs 190,000 respectively. Where houses are sub-let the minimum rent for the larger type house is Shs 1,000 per month. With the large number of applications submitted it was clear to the study team that lack of enforcement of the owner-occupation clause was already expected by applicants before the houses were built and is an indication, even at that time, of the growing shortage of housing in Nairobi.

3.3.2. Kenya Canners project (002) was in concept very different from Kimathi. It was intended to be for very low income workers at the Kenya Canners Factory (pineapple processing by Del Monte of the US) in Thika, about 35 km. from Nairobi. At the time these 2,000 housing units were proposed they ranked as the "lowest cost houses the USAID Housing Guaranty Program has achieved anywhere." There was additional interest in this project because it was intended to get away from the "company town" concept and permit workers to own their homes. It was also to serve a "rural" constituency and the "borrower" was to be a "democratically elected" Savings and Credit Society formed by the workers. The loan documents also envisaged the project fostering small business development and, of course, being an absolutely vital component in the successful operation of the industry which had recently moved its operation from the Philippines to Thika. The proposed "borrower" was ultimately changed to"Homeowners Corporation"to be formed by Kenya Canners.

However in July 1973, Del Monte Corporation informed AID that they were terminating negotiations relative to the project. The explanation given was that "we are unable to proceed to form the Homeowners Corporation since the Kenya Government recommends against individual home-ownership at lower income levels, desiring that Kenya Canners have control over housing. Further, we are informed that the Kenya Government does not wish to give a guarantee to AID against losses resulting from its guaranty of the loan."

In the team's view this may not fairly represent the reason for terminating negotiations. We believe that Kenya Canners simply found it more practical and convenient to own and control all its staff houses completely and in the end decided to finance them out of company funds, which is what happened.

3.3.3. Umoja Estate (003) was being negotiated at the same time the Kenya Canners project collapsed. In many ways it is both in concept and cost to be found between the rather impressive Kimathi Estate and the extremely low-cost Kenya Canners project. The Umoja Development was built on a single site 6 miles east of Nairobi. It is financed by a $10 million HG and consists of nearly 3,000 "expandable" units of which 75% are of only one room plus kitchen and bath room, whereas 20% have two habitable rooms from the start and 5% have three rooms. The latter is the maximum number of rooms permitted by the Nairobi City Council at Umoja. Originally it was hoped to keep near the magic figure of Shs 24,000 but in the end this was not possible and the smallest unit worked out at Shs 30,600. Nevertheless, it is one of the lowest cost schemes built around Nairobi recently which provides for a wet core and a habitable room and is expandable. Financing terms called for a deposit of Shs 1,530/, Shs 1,777/ and Shs 3,903/ respectively and monthly installments over 20 years (incl. of rates, insurance and ground rent) of Shs 295/, Shs 338/, and Shs 350/.

The project was immensely popular from the start and there were about five times as many applicants as available houses. This scenario is very familiar in Nairobi and is explained by the fact that the market value of structures provided at

cost and with favourable financing terms is about twice the cost, thus giving any successful applicant a windfall profit of 100% should he/she decide to sell (which is not permitted, but not enforced). Market rents also exceed monthly payments by about 50%. The scheme encountered some problems during implementation both in regard to tendering and selection of allottees, but the project is now completed and occupied. The lay-out of the development leaves something to be desired and the provision of community facilities, which is the responsibility of the NCC, lagged behind the rest of the development. A second phase of Umoja is now in the planning stage and will seek to remedy some of the shortcomings of the first phase.

More than 65% of the houses in Umoja are already sub-let totally and rents and sales prices are appearing in the daily papers. There has been little attempt by the NCC to rectify these irregularities and follow-up administration has been poor. There are already large delinquencies of payments due on loans.

However, almost all smaller units are being expanded and there is a general sense of continuing gradual improvement in the project. A market, primary school and health clinic are open and other community facilities appearing. Maintenance of public areas and security are the two most common complaints, otherwise people living there seem satisfied that they now live better than before (though at a higher price in many cases). For the most part, the occupants - whether original allottees or sub-tenants - are still in the income groups for whom the scheme was intended, namely those between the 30th and 50th percentile.

3.3.4. The National Housing Corporation project (004) is a $5million HG loan to provide financing for 12 provincial towns in Kenya at the request of the Ministry of Housing and Social Services. The argument was that other urban areas were being left behind Nairobi in new housing developments and that the NHC had the experience and capacity to institute this type of project in collaboration with the local councils.

The 12 towns were: Nakuru, Thika, Eldoret, Nyeri, Meru, Kitale, Embu, Kericho, Nanyuki, Mombasa, Kisumu and Malindi.

The basic design is an expandable house, as in Umoja, though three variations of house types were necessary, namely, a highland type, a lakes and coastal type and a special type for Mombasa which insisted on a larger type than originally envisaged. Approximately 1,000 one and two-roomed units are being financed at an average price of Shs 32,380 and Shs 46,120 respectively. However, these average cost figures cover a wide range of deviations, which are explained partly by location and partly by delays in execution. In fact, it has been characteristic of this project that cost control was weak and delays were the rule rather than the exception.

Some schemes (Embu and Malindi) proved difficult to sell and the Malindi scheme has reverted to being a rental scheme. Other schemes have been more popular, but always the two roomed units more so than the one-roomed ones.

The main difficulty of implementing this project seems to have been the poor coordination between NHC and the local councils, - the latter complaining of interference in matters they thought were their prerogative, such as site selection, selection of allottees and administration. The NHC for their part, complain of procrastination not only on the part of the councils but in the Department of Lands with respect to allocation of plots. On the whole it proved difficult for NHC to directly administer so many schemes around the country at the same time. Normally, the NHC leaves the implementation of housing schemes to those councils who have the capacity to do so, which would have been the case in practically every one of the 12 towns concerned, but in this case NHC played a much more direct role with no apparent advantage on balance. The project is still not complete, but no major obstacles remain at this time.

In spite of the many difficulties encountered the project still represents an addition to the housing stock in these provincial towns and a new venture into expandable housing for low-income groups for the NHC. Compared with Umoja it is clear that one of the main differences, apart from the locational split, has been the lack of strong, highly motivated and talented leadership which creates the capacity to deal effectively with uncertainties and crises. The substantive report identifies another 18 areas where improvements in handling this type of project should be introduced.

3.4. Lessons and Recommendations

It has often been stated that availability of funds was the main constraint to the solution of Kenya's shelter problems. One major lesson learned from the AID experience is that this is not necessarily so. In fact, lack of viable projects is equally important. Projects can lack viability for a number of reasons, some of which have become evident in the description of the four AID HG projects.

Administrative capacity is certainly one of the reasons why existing schemes which looked promising from the start have fallen into disrepair and default over time. To add new schemes to an over-burdened administration without providing technical assistance, does not strengthen the institutional framework which is normally one of the objectives of a project. The lesson learned in this respect is that in the long run, public sector agencies should be able to concentrate on the areas they are solely responsible for, namely policy formulation, overall planning, provision and maintenance of public services and, to some extent, financing. Private sector enterprises should be encouraged and assisted in the designing, construction, administration and financing of housing in Kenya. In Kenya's mixed economy this is not only a question of adhering to policy but it is also likely to be much more efficient.

A few lessons have been learned as to the type of housing units needed most. It appears that in urban areas the larger units have been greatly favoured over the smaller ones. The larger

units are relatively cheaper to build and part of their attractiveness is clearly their demonstrated capacity to create income for their owners. Additional reasons for this situation are the severe shortage of housing for the middle groups and that urban households are less willing than their rural counterparts to engage in self-help building for lack of skill, time and easy access to building materials. Significant also is the fact that these low income families have access to funds to pay deposits for a larger house. Two general observations should be made at this point:

1. The main reason people are poor is that they have very little money - now. If income opportunities are created together with the provision of housing (through employment and sub-letting) then it becomes clear that future income rather than present income should be used to calculate affordability.

2. A given housing situation is not a static phenomenon, neither is a housing project. It should therefore be recognized that as new housing is built assets are created which can generate the additional resources for expansion of the supply of new housing.

These observations imply that future projects could consist of several components to be implemented in phases and sold off as they are completed, possibly combined with incentives of early repayment of loans. Similarly, the selection of target groups for occupation can be differentiated depending on the component to be allocated, sold by auction or partly financed by joint efforts (cooperatives, employers, civil servants, commercial ventures.)

The provision of community facilities or their proximity is always taken for granted in conception of projects, but the lesson learned here is that in more than one scheme in Nairobi, and practically all schemes in other towns, such facilities were not available when the scheme was ready for occupation. The same can be said for provision or easy access to employment opportunities and transport to and from the main business district. These components are so obviously important that we shall turn to other less obvious but equally important aspects of shelter:

- Proximity of administrative and maintenance facilities is a lesson learned from Umoja.

- The importance of landscaping and trees in dense low-cost schemes (Dandora and Umoja).

- Choice of sites and lay-outs are as important as design and choice of materials (Umoja and NHC projects).

- Plot sizes and total size of project is decisive for the well-functioning of a scheme (Dandora is a lesson in this respect. Umoja has taught planners lessons on traffic

flows which are costly in space, funds and lives).

- Some of the schemes in provincial towns are simply too small to take advantage of economies of scale or to be an enhancement of the community. A greater number of units, albeit of a kind which is in demand,would improve these projects.

The selection of beneficiaries for the schemes built by NCC and NHC has been one of the most criticized aspects of the AID projects. The criticism has been less in the cases of Dandora (World Bank site-and-service scheme) and almost absent in the case of Buru Buru (CDC middle income mortgage scheme) and the Akiba Scheme (higher middle income mortgage scheme). Given the target group, i.e. those with family income of less than the median, the selection is, in any case, going to be difficult to make absolutely fair. It is suggested earlier in this report that other criteria than income should be used more decisively, namely such considerations as present housing conditions, place of employment, membership of common bond group and sheer need. More specifically it is further recommended that all applicants must know what and where the scheme is (possibly have access to demonstration units), that they should not be aware of the selection in detail, but be warned of the consequences of giving false or misleading information. Furthermore, after a preliminary sorting, all those eligible at this stage must be interviewed by a local service agency (NCCK, Social Service League, Service Clubs, Salvation Army, etc).

The selection should then proceed according to a point score system and each applicant should, in the process of interviewing, be queried about his/her choice of accommodation and the question of affordability. On this latter point, it is reiterated that future income as opposed to present income be taken into account both with respect to house allocation and when calculating a cost recovery schedule.

The use of low-start mortgages and incentives for early repayment has been elaborated in the Finance report.

In line with what has been said so far, there would seem to be a case for considering inviting three or four competent institutions in the private sector to submit proposals for future schemes the objectives of which are to be clearly stated and sanctioned by the MHSS and the local authority. Such a submission would include designs, lay-outs, infrastructure, and administration plus, of course, a costing of all items. The chosen institution would then proceed to detail the project for tendering and be responsible for construction of all components. Financing would be released in stages as before, and loans would be guaranteed by the Kenya Government. Competitive bidding for several projects is advantageous, as learned from Umoja. There are several private firms in Kenya which could handle projects as large as Umoja and not only in Nairobi.

A positive lesson was revealed by the setting of a deadline for draw-down of the allocated amount of the loan in the case of the NHC project. Similarly,another positive lesson can be drawn from the NCC project where deposits paid by the allottees for the AID sponsored units were utilized to build another 100 units...These two lessons combine to point to a procedure which should be followed in the future, not just for AID projects, but as a general policy, namely:

- to implement new projects in stages. The stages and/or components of a project need only be large enough to assure reasonable economies of scale in the construction phases.

- to offer components of the project for sale throughout the stages. Funds thus generated allow for expansion of the project and/or reduce the amount of investment otherwise needed.

- to offer for sale first the least developed part of the project, possibly just part of the serviced land to the highest bidder, but with development clauses with respect to type and time.

- to encourage strongly the early repayment of any loan given to certain components of a project in order to increase cash flows and/or expand the project. This approach is now being adopted for the Second Urban Project presently being implemented with World Bank support. However, a new AID project could go much further particularly with regard to the sale of housing units to groups such as housing cooperatives which have funds, or can raise them privately, to make much larger deposits or to buy the houses outright.

More will be said about approximating selling prices with market prices and cost recovery in 4.5. of this summary.

Finally, though only urban projects have been attempted so far, rural projects should not be neglected in the future. We shall return to this topic under 5.3. in this report. The need is great there even if the effective demand for completed units is not.

4. Housing Finance in Kenya

4.1. Overview

The report on Housing Finance in Kenya starts with an overview of the financial infrastructure and its development since the time of independence. Against this background the institutions, private and public, dealing with housing finance are analyzed and related to the present housing situation. The conclusion is that the present institutional framework may be adequate, but its policies and approaches are not. Kenya's strategy for economic development over the last decade has been to achieve three objectives (1) fast overall economic growth (2) an accelerated Kenyanization of the economy and (3) ensuring that

the benefits of development are distributed equitably. Whereas the record on the first two objectives is quite admirable the last objective is still far from achieved. In fact, it is fair to say that the fast economic development has tended to create even more inequity than before, even if the per capita income has risen dramatically. The inequities manifest themselves particularly in the areas of employment, housing and access to social services.

One of the main hypotheses of the Housing Finance report is that housing is not only a basic human need which must have a high priority in any country, but it is also an income creating asset and a powerful force in capital formation, both factors in turn being vital forces in income creation and distribution. The hypothesis is verified by many recent examples of housing projects in Kenya (and elsewhere) which turn into small goldmines for a few individuals "lucky" enough to be allocated a public housing unit at cost price.

4.2. Savings Mobilization

Compared with other developing countries Kenya has a high rate of savings both in the public and private sectors. In 1977 aggregate savings reached 25% of GDP with household savings on the average 10% of personal disposable income. It is therefore difficult to raise domestic savings even higher, particularly in the light of an inflation which results in negative interest on normal deposit accounts. The public sector has an important role to play in identifying new areas of high property tax propensity and of supporting new institutions or financial instruments to enter the market to tap household savings at much higher rates of interest particularly considering the high returns on housing investments.

The level of Kenya's financial infrastructure is high and consists of three main services systems: The Banking System, the Non-bank Financial Institutions and the Public Sector Financial Intermediaries. Although many foreign banks are now represented in Kenya the British banking traditions prevail which is also true in the field of housing finance. This accounts for a very conservative and inflexible set of institutions in the private sector. Institutions and techniques which have served the housing field well in other countries at Kenya's level of development have not been introduced here. It is now up to the public sector, possibly supported by outside technical assistance, to introduce such new ventures and methods.

Two encouraging signs with respect to mobilization of new domestic savings in more recent years have been highlighted in the main report. One is the dramatic growth of savings and credit societies, the other, the even more impressive contributions made by all levels of society towards "Harambee" projects (i.e. voluntary organized self-help projects). Together the two movements demonstrate the ability and interest among private households to save for specific purposes which will benefit them within a time-frame of two to three years. In both cases the common bond is a major advantage

and particularly in the case of savings and credit societies, where lending is part of their function, the common bond enables members to obtain unsecured loans, albeit on fairly short term. Both of these movements are in need of technical and administrative assistance as they grow and deal with large amounts of funds and larger and larger projects.

4.3. Institutional Mechanisms.

The specialised report looks at institutional mechanisms first from the point of view of the public sector, which in this case is defined as those institutions which are purely government-owned. Hence, institutions with mixed participation such as the Housing Finance Company of Kenya is listed as a private sector instituion.

Housing finance in Kenya is characterized by an almost equal share being provided by the public and the private sector: the public sector very distinctly concentrating on the lower (as opposed to lowest) income housing,and the private sector catering to the rest. And again the distinction is clear in the private sector, namely, that the formal institutions concentrate solely on the higher income housing and leave the rest to the informal (or non-institutional) mechanisms of finance. Another distinction is that on the whole it is true to say that public sector housing finance is more attractive to the beneficiaries due to certain elements of subsidy.

It is not policy in Kenya to provide general subsidies for housing but it is still widely done. Whereas subsidies may be justified in the rural areas it is quite clear that where subsidies are applied in urban areas at the moment they are unnecessary, perhaps even counter-productive, because they discourage resource mobilization, reduce residence mobility and thereby the optimal utilization of the housing stock.

The Ministry of Housing and Social Services (MHSS) is responsible for formulating and implementing the Government's housing policy. This responsibility obviously includes the strategy for public housing finance mobilization and allocation. Housing needs for the various districts and towns in Kenya have been carefully worked out under the assumption that all those in need of shelter will spend 20% - 25% of their income on housing. Using this assumption, costs of structures and total capital requirements are calculated. The study makes the observation that using an average rent propensity for the whole population is wrong in theory as well as in practice, because dealing with the whole range of income groups which demonstratedly ranges in rent propensities from 45% to about 10% (going from low to high income) an average percentage of 20-25 does injustice to all but the few in the middle. Likewise, the report notes, that if housing expenditures are directly related to income, the best form of finance mechanism is not amortization by a fixed annuity. To charge an interest rate for public housing loans which is less than the rate of inflation is also inappropriate if more funds are to be attracted into housing.

The National Housing Corporation (NHC) is the executive arm of the MHSS. As such it is primarily responsible for making funds available for local authorities and to assist them with project preparations. But since only the 38 largest centres are on the list of eligible recipients of project funds, NHC has also undertaken to give loans to individuals outside these centres. This is an arbitrary and poorly functioning system. With individual loans now approaching 5,000 it is becoming unmanageable.

Local authorities are sometimes refused loan sanction from the Ministry of Local Government for reasons unrelated to housing. In other cases local authorities can get loan sanction but be refused loan approval by NHC usually for reasons of being in arrears on other loans. In both circumstances the local authority is denied housing developments which it needs, for which funds are available and from which it can generate additional revenue. The NHC may choose to execute a scheme on its own and has done so in several cases. This adds to the burden of administrative work, which evidently is the main bottleneck in the organisation, more so than the supply of funds, some of which lie idle for long periods of time.

Funds from NHC are on concessionary terms namely at 6.5% interest over a 20 year period for tenant purchase and over a 40 year period for rental units. This is not in line with government policy, strictly speaking, but is justified by the fact that NHC gets its funds at less than this rate of interest from government revenues. However, the reasoning for concessionary terms is that it should benefit the ultimate consumer. Instead, the local authorities exploit the terms to the extent that about 30% is added on to the cost of finance by charging higher rents, maintenance and administrative charges to the allottees, - who in turn, of course, sub-let the units at market rents to "the ultimate consumer".

In the private sector, mortgage institutions have been very successful with a "sellers' market" prevailing since a few years after independence. The chronic shortage of funds (deposits, savings, shares) compared with the constant queueing for loans would be a strong argument for offering higher interest rates for deposits and asking even higher rates for loans, - in order to maintain the interest spread. If all three major institutions did this they would not be competing against each other but against less profitable investments and in addition, they would encourage savings from those who now consume rather than taking a negative interest on savings in real terms.

4.4. Beneficiaries and Terms

The Housing Finance Company of Kenya (HFCK) is jointly owned by the Government and the Commonwealth Development Corporation (CDC). Savings and Loan (Kenya) Ltd. is wholly owned by the Kenya Commercial Bank (KCB) and the third major mortgage company, the East African Building Society (EABS) is the only institution registered under the Building Society Act and

operating under somewhat stricter regulations than the other two. Paradoxically, all three of them are instrumental in moving resources from the lower to the higher income groups by virtue of the clientele they have as depositors and borrowers respectively.

There is nothing intrinsically wrong with borrowing from the poor to give to the rich, if the poor come for deposits only. However, the terms and conditions offered by these institutions are such that for reasons of security, size of deposit, rent propensity (which is determined by the institution) location and income, many of those who have been clients on the deposit side for a long time would never be accepted as borrowers. The study suggests that if public funds are placed with these institutions, (and that is the case with all three of them), it is not unreasonable that they carry certain conditions for their use, such as insistance on maximum cost of dwellings to be financed, minimum deposit to be required, number of years to maturity, etc. Terms and criteria for deposits as well as for lending are very similar in the three institutions. HFCK will give up to 90% of value as a loan and will go as high as 20 years for repayment, (7% over 15 years is normal for the other two) but all require the same degree of security, which means an unencumbered first charge on the title. None of the three have had losses due to defaults on loans though they all experience late payments on a few accounts.

On the whole it is a very profitable business to finance housing and it has become even more so by engaging in estate development which HFCK is doing directly and EABS is doing through an investment company called Akiba, as it is prevented from being a developer by the building societies act. Although HFCK through CDC funds is by far the larger developer of the two the efficiency by which both organisations implement projects for the middle income groups is praiseworthy. The study makes three recommendations in this respect. That more mortgage finance companies should be encouraged by government to enter the market (The Cooperative Bank and the National Bank of Kenya are both in the process of starting such companies); That private financial institutions which are also developers should be considered for additional funds for this purpose by local as well as foreign investors. Specific conditions as to type of development, location and target groups could be negotiated and must be in line with government policy. Finally, a strong recommendation is made for the creation of an organized market for second mortgages. Likewise, re-discount facilities for first mortgages would be a welcome addition to the Central Bank's tools for managing the money supply and to channel more funds into housing.

Security for mortgage loans to rural housing has always presented a problem in Kenya. Either clear titles do not exist, or they are not registered, or it is difficult to establish a value for the property even if above conditions exist. This latter aspect is explained by traditional attitudes towards housing and is not likely to change. To overcome some of these problems the study recommends that housing cooperative societies or other groups with a common bond should serve as a catalyst in facilitating loans and assisting with technical and administrative tasks. Moves are presently under way to set up a technical

service organisation for housing cooperatives. This move needs support from both local and external sources.

4.5. Constraints and Recommendations

A number of policy oriented questions have been addressed in the light of the obvious constraints which presently exist on supply but also on demand for housing finance. Although there appears always to be an excess demand those most in need of better housing do not always register their demand because they are ruled ineligible for reasons of income, length of residency, security, repayment terms, amount of deposit, housing standards, etc. Basically these constraints may be reduced to two, namely standards and repayment terms. Standards to a large extent determine minimum cost, security and affordability. Standards are presently being looked into, but repayment terms not yet, although some measure of a progressive annuity system will be introduced as an experiment in a new World Bank sponsored shelter project.

Supply constraints also touch basic policy issues. One such issue is land tax where the prevailing system is clearly outdated. For instance, undeveloped land could be taxed at a higher rate than developed. Tax reduction for interest payments on mortgage loans is permitted without adding an amount for owner occupancy (saved rent) which is tantamount to a large subsidy to home owners, who need it least of all. Rent control is totally ineffective and restrictive if it wasn't. More decentralisation of technical assistance for housing to local authorities and support for their efforts to mobilise resources locally is another policy issue not confined to housing alone. The most direct and forceful limitation on supply of housing finance is the absence of a "free" market for mortgage instruments where supply and demand could determine the price of money. Though it functions well in some developed countries it is not likely to be introduced in Kenya for some time.

The best thing that can be hoped for is therefore a differentiation of the institutions and their instruments for them to be more in line with realities in the shelter sector. Such a move would ease many of the existing constraints on supply as well as on the demand for housing finance.

The report on housing finance contains a series of recommendations ranging from further studies to some very practical steps which could be taken immediately. For a more technical elaboration of these recommendations the main report will have to be referred to. Some recommendations have already appeared in the previous part of this report, hence a very brief listing will suffice for this summary.

- to base mortgage loans partly on future rather than on present income.

- to schedule repayments of loans for low income housing to conform with income earning capacity over time in the form of variable repayments or low-start mortgages.

- to introduce rebate systems for early repayment of loans.
- to charge commercial rates of interest on all loans for housing so that if any rebate is introduced the loans are still without subsidies.
- to study the capabilities of the local authorities in terms of resource mobilization and administrative capacity.
- to study possible tax and other revenue sources with respect to shelter and with the purpose of mobilizing additional resources.
- to support the creation of facilities for an organised secondary mortgage market and a re-discount facility for first mortgages.
- to place public funds, local and external, with private financial institutions who will undertake developments for low income housing and administer them till the loans are paid off.
- to let the function of administration of existing public housing loans be passed to private sector institutions in order to relieve the burden of local authorities.
- to encourage the public sector to offer guarantees (for a fee) for mortgage loans made by private sector institutions for low-income housing.
- to simplify the tenant-purchase agreements by making them more flexible and less burdensome on the public sector, possibly by making them out-right sales contracts.
- to review the rent restriction and rent tribunal legislation with a view to making them easier to administer and more relevant to local circumstances.
- to study the effects and procedures of disposing of public rental units by sale to the sitting tenants.
- to study the cost and benefits of present subsidies in housing.
- to up-date information on rent propensities of low income families in order to assist in the re-definition of target groups for public housing schemes.

Finally, the study recommends a move away from the traditional pre-occupation with reduction in standards and cost for urban shelter projects by adjusting finance and cost recovery terms to realistic affordability conditions and by phasing developments in step with such cost recovery programmes. The sale of developed plots and completed units are but two of the devices suggested for an increased cash flow in new projects. At the same time sub-letting of a unit in its entirety, if in contravention of any contracts, should be actively and immediately pursued by recalling any loans still outstanding, or alternatively, the introduction of the lender's right to collect all rents until no further loans committments exist.

The point is made all through the three specialised reports that the government policy must be seen to be implemented by assuring that new housing provided will be for those most in need and that in this process housing can serve not only as a shelter but as an effective way of re-distributing income and wealth in Kenya.

5. Rural Shelter in Kenya

5.1. The Needs

Despite the great improvements in the country's agricultural production over the last decade, it is now clear that the number of rural poor has been steadily increasing, partly as a result of individualisation of rights over land and the consequences this has had on the land market. Two opposing trends have emerged. There is a growing concentration of land resources in fewer hands, while among the poor it has been impossible to avoid further fragmentation of already sub-economic plots because of traditional rules of succession and because of the inability of the urban job market to absorb sufficient supplies of rural labour.

Apart from its negative distributional effects, Kenya's development strategy has to date placed little emphasis on rural shelter. Attitudes regarding the role of housing in community development and welfare have remained imprecise. Apart from some very small financial input from government, and some poorly coordinated efforts by a few agencies and individuals, shelter development has been left increasingly to market forces. The current development plan does show greater concern about these and other policy shortfalls and should therefore indicate more action to alleviate some of the hardships experienced in rural areas. But still many gaps will remain.

Traditional shelter has evolved and developed for many generations. As such, it forms a reflection of the cultural heritage of the people, the physical environment, lifestyles and the availability of construction materials. However, rural housing in Kenya is now more than ever before in a transitional stage. The most evident change is the gradual disappearance of the round house in favour of rectangular types. Similarly, construction techniques have become more sophisticated and there is a constant growing need for specialized labour. In many rural areas, traditional building materials are becoming scarce. The growing population is tending to over-exploit a limited resource and at the same time reducing that resource by extending cultivation into marginal lands, the traditional sources of building materials. This scarcity is obliging rural dwellers to look for alternative materials, in turn causing construction costs to increase. The growing market for modern materials in rural Kenya means that the controlled retail prices of many of these materials cause inflated under-the-counter sales prices or artificial shortage,or both.

Another very real problem for rural shelter is the land tenure system, because it determines how, to whom and when land can be released for development. The existing institutional framework

effectively provides mortgage facilities only to those with land titles. But even to land owners with a clear title, methods of obtaining credit for housing remains difficult. The main reason is that mortgage institutions are apprehensive about the security represented by the structure to be financed. Tradition has tended to regard a family's home as something sacrosanct which should not be repossessed or auctioned off due to financial default. Hence, the modern legally correct procedures cannot be applied, and if they are, are likely not to produce the desired result. Consequently, land development potential, including that of shelter development, is not adequately tapped.

The government continues to give greater attention to urban shelter, and for good reasons. Throughout the history of Kenya, the initiatives for rural shelter development has consciously been left to the rural people themselves. Traditionally this made good sense particularly to the colonial powers. But with the growing scarcity of traditional materials and the increasing pressure of a disadvantaged rural population this policy is no longer feasible. More recently, some assistance has been forthcoming. Loans to rural housing and some technical assistance has been provided by the National Housing Corporation, as mentioned in the previous chapter. Analysis of these loans, however, demonstrate that they are typically given to middle income urbanites who would like to have a second home in their rural home area. This is not to say that these houses stand empty most of the time. Relatives and friends are common occupants; or they are rented to salaried individuals who can afford an economic rent.

The Commercial Bank of Kenya has also offered mortgage loans to farmers, but terms and conditions of the loans are such that they are only taken up by the more affluent and to a very limited extent at that.

Rural shelter needs are to some extent still different from the urban ones. Firstly, the provision of the superstructure is less difficult than access to infrastructural services such as water, transport and community facilities. Secondly, availability of building materials and tools, traditional and modern, often becomes a real stumbling block for those who have the ability and will to construct their own house. Thirdly, there are difficulties in obtaining credit for even very substantial dwellings, or for that matter, for permanent improvements to a traditional house. Fourthly, the administrative machinery for shelter provision is weak and therefore offers little assistance. Finally, of course, landlessness and income difficulties are much more severe in rural areas.

The study of rural housing conditions and prospects conclude that apart from the common characteristics spelled out above, the shelter needs of rural Kenya can only be comprehensively understood on the local level, because each region of the country features a unique mix of problems, ranging from those of the nomadic tribes in the arid and semi-arid regions to the newly formed rural communities around agro-based industries in some of the most fertile regions of Kenya.

The difficulties of providing greater assistance should not be under-rated. Yet there are sound developmental reasons why further inputs to raise the level of rural housing in the wider sense would be beneficial. These include: the improvement of health, increases in productivity, expansion of employment opportunities, maintenance of cultural stability, the promotion of locational policies, and the reduction of income inequalities. But the main constraint to a further development, other than the fragmented and the sporadic, is the unclear national committment to improving rural shelter conditions.

5.2. Recommendations

Relating this analysis to the potentials for further action the recommendations brought out in the report on rural shelter are intended to be realistic and lend themselves to implementation over the short and medium term. If followed, they would help resolve the problem of both quality and quantity of rural shelter:

- Strengthen the National Housing Corporation's Rural Housing Loan Scheme. The importance of the scheme has been recognized by government by a recent substantial increase in budgetary allocation for the fund. Nevertheless, little is known about the mechanics of the funds, and it is recommended that these be carefully studied, if necessary to support applications for a yet greater increase in its allocations. Management of the scheme is weak; and interest rates, in particular, should be examined by the team proposed to investigate the operations of the Housing Corporation.

- Strengthen the Role of the Provincial Housing Officers. These field officers of the Ministry of Housing and Social Services could play a much more important role in disseminating information between Nairobi and rural householders. It is recommended that their staff should be increased and relevant training programmes initiated.

- Decontrol Prices of Building Materials. The present system of gazetting prices for building materials is clearly counter-productive. It is recommended that price controls be removed, subject to careful monitoring to determine that the change is effective in increasing supplies and reducing prices.

- Accelerate the Local Afforestation Program. One of the key building materials - timber poles- is becoming particularly scarce and expensive in many parts of the country. The programme for afforestation in small areas to meet local needs of poles (and possibly of charcoal, too) should be expanded towards meeting the demand.

- Support Research into Appropriate Shelter Designs and Technology. Several lines of research are currently in progress or proposed, but they are uncoordinated and appear unlikely to lead to any concrete programme. It is therefore recommended that such research be encouraged, and that the Housing Research and Development Unit prepare a programme whereby experimental and demonstration units may be erected in key locations throughout the country.

- Expand the Village Polytechnic Training Program.
  Since village polytechnics offer a ready base for the training of artisans skilled in construction, it is recommended that their expansion be supported, especially insofar as it leads to the increased availability of such skills in rural areas.

- Support the Establishment of a National Housing Cooperative Agency. The principle of agricultural cooperatives has been demonstrably appropriate for Kenya; self-help groups have been active in shelter construction- and a study has shown that there is potential for the development of shelter cooperatives. The recommendations of this study relating to the establishment of a National Housing Cooperative Agency are therefore supported.

- Introduce a Loan Scheme for Roof, Floor and Wall Construction.
  In order that households with no security for loans from the National Housing Corporation may make small improvements to their houses, the team believes that a corporate security may be provided by a group of householders, on lines similar to those explored in West Africa. It is therefore recommended that a study be initiated to determine the feasibility of a scheme of this nature.

- Enforce and expand the provisions of the Employment Act.
  A number of large-scale employers in rural areas are particularly lax in promoting the welfare of their employees as regards their shelter. It is recommended both that the provisions of the Employment Act (requiring, in certain circumstances) that employers provide either housing or an allowance to their employees, be enforced; and that, subsequently, the Act be strengthened by defining the circumstances in which it will be obligatory to provide minimum-standard housing.

Of other recommendations, it is envisaged that support could be solicited by the Government of Kenya, from AID or other aid organisations for the following:

- If systematic study shows the need and administrative capability, additional funds could be directed to the Rural Housing Loan Fund;

- Training programs for staff of the offices of Provincial Housing Officers;

- Financial and technical assistance towards local-resource afforestation programmes;

- Financial or technical assistance for studies on appropriate designs and technology for rural shelter;

- Training programmes for village polytechnic instructors;

- Technical assistance in the establishment of a National Housing Cooperative Agency;

- Assistance towards a study to determine the feasibility of a roof, wall and floor loan scheme.

Chapter II

THE URBAN SHELTER SECTOR INCLUDING AID'S EXPERIENCE

1. Introduction and Summary of Conclusions and Recommendations

1.1. This chapter reports on the development of the urban shelter sector in Kenya from shortly after independence in 1963 to the present day. The chapter has a special section on the AID experience during this period. In order to ascertain whether AID and other major housing projects have had any influence on policies and institutions during this period it was necessary to deal first with the urban sector as a whole before analysing, in some detail, the particular AID involvement. The last section of this chapter examines prospects and proposals for the next five years. Some of these proposals are not the team's own but in our view worthy of comments and promotion in a report such as this. By looking at the prospects for the future, more concretely in the context of the new development plan (1979-83) it is possible to identify certain shortcomings and to make specific recommendations on how they may be ameliorated.

The same approach has been used in the analysis of the AID projects. Rather than itemizing things that went wrong we have attempted to discover the difference between what were conceptual and what were procedural shortfalls. This has not been an easy task and due to the short perspective we have of the recent schemes it was not always done to our own satisfaction. However, in our view the objectives of the AID projects were the best yard-stick to use in measuring failures and successes as of today.

At the same time we have questioned even some of the objectives from the point of view of conformity with the stated housing policy. By pointing to some of the lessons learned from each of the four projects recommendations for future projects will emerge.

Finally, the reader should be warned that although a good deal of cross-references have been applied each of the chapters will of necessity cover some common ground but with different emphasis and should therefore be read *in extenso* to get the full and differentiated picture of the shelter sector in Kenya.

The first two sections of this chapter briefly examine Kenya's past economic growth. GDP has been growing at a real rate of 5.3 per cent annually over the last decade, with a substantial and increasing concentration in the urban areas. The towns, comprising little more than 10 per cent of the country's population, are doubling their population every ten years. The population growth rate is, however, more rapid than that of formal sector jobs. The result has been an increase in urban poverty, which has manifested itself in many ways, but preeminently in mushrooming shanty settlements. With municipal development expenditures having averaged only Shs 166 ($22) per capita

annually over the past few years, local resources have been grossly insufficient to be able to accommodate all of the demands made upon them.

The following sections of this chapter examine the urban shelter policies and institutions existing ten years ago and at the present day; and conclude that these have altered but little on paper. Although data are sadly incomplete, it is evident that private formal house construction has averaged little more than a thousand or two units annually in all urban areas of the country, comparing with an increase of 22,000 households each year over the past few years. This private construction, too, has been predominantly of high cost units. Nevertheless, the private sector has been extremely active in the construction of unauthorized houses, often for rental, and often well below the standards required by the local authorities. Environmental health standards in these "squatter settlements" are perhaps their most disturbing feature.

Local authorities have at their command a gamut of controls over private house building: through building standards, zoning controls, rent controls, various forms of taxation and options of demolition. The report briefly notes the form of each of these controls, finds that they have not been comprehensively examined and that in some ways they are counter-productive in stimulating the supply of "decent" housing. The controls, nevertheless, are applied only to a relatively small proportion of new units constructed.

With some relatively insignificant exceptions, the public sector has been building lower-cost housing units and site and service plots for rental and tenant-purchase, together with higher-cost units for its own employees: the number completed annually has recently averaged under 3,000 units in all urban areas. These have been built through the municipalities, the National Housing Corporation and (for Government employees) mainly by the Ministry of Works. Targets have been set for numbers and unit costs of houses and plots and policies have been formulated on such matters as eligibility for and allocation of these houses. The targets have, however, consistently been under-achieved and the policies - where stated - have not always been consistent or necessarily acting in the best interests of the supposed beneficiaries.

A number of differences of policy emphasis - as exhibited by budgetary allocations and by performance - have, however, been manifested over the decade, and in a direction which the study team finds encouraging. The examples of these changes are mainly drawn from projects financed by foreign donor agencies, since these offer the most dramatic illustration of actual shifts in policy. The main agencies involved are the AID (with three projects on the ground, one abortive project and a fifth presently under preparation); the World Bank Group (with two urban projects being implemented and a third due for preparation); the Commonwealth Development

Corporation/CDC (with a single major on-going project but with a continuing involvement in Kenya's shelter provision); and the European Development Fund/EDF (with one group of projects recently started).

The first of the changes identified is a focusing upon the urban poor - broadly, those between the 20th and 50th percentiles in the household income distribution curve. In the context of a continuing - and as yet unresolved - debate on housing standards, the cost to the public of units produced in the major projects has progressively been reduced so as to make them more affordable to the disadvantaged sections of the urban community. The first of these projects, the Nairobi Kimathi estate financed by AID, was targetted towards "middle income" families. CDC followed with its Buru Buru estate, also in Nairobi, at first designed for those in the lower-middle income groups and later to a rather richer group. AID and IBRD/IDA then produced housing schemes (Dandora and Umoja respectively) which would be affordable by those as low as the 20th percentile and specifically excluding those households with a higher-than-median income. The EDF projects, together with others still under discussion, are aimed at accommodating even lower income groups.

A second change in policy emphasis over the decade is a move of the prestige projects away from Nairobi towards upcountry towns, (although the National Housing Corporation had been operating also in the smaller towns since its inception). Whereas it had been easiest to construct prestigious projects in the capital city (because of its higher level of resources, including a relatively well-developed institutional capability), this concentration of development was disadvantaging upcountry towns. The move was initiated by AID (with a group of projects implemented by the NHC) and subsequently by the World Bank, first in Mombasa and Kisumu, later - it is intended - in smaller towns. These efforts are being supplemented with financial assistance from the Dutch Government and possibly later from the British government.

A further change in policy has been witnesses in adjustments to the type of shelter provided by public agencies. The realisation has grown that it is neither necessary nor is it necessarily the best way of providing shelter to the urban poor by allocating to them completed units; which, in any case, they usually cannot afford without a significant subsidy. Whereas developments in the late 1960's and early 1970's were predominantly of contractor-built houses, these were followed in 1975 by the AID Umoja scheme (which incorporated the principle of house extension by owner-occupiers) and Dandora (a World Bank site and service scheme in which the greater part of construction could be undertaken by the allottee). Current proposals incorporate merely the servicing of plots, such as in the EDF and World Bank schemes (whereby the degree of freedom for the owners or allottees of the plots to construct as they may is increased).

The final major shift has been in the development of institutional capacity, by means of the reorganisation of some of the main agencies in Kenya responsible for shelter delivery. These include the Ministry of Housing and Social Services and the three largest local authorities; more changes are in the pipeline which should enhance these public bodies' capabilities.

Although there was a growing awareness among some professionals of the need to change the emphasis of prevailing policies, there is no doubt that the magnitude and conditions of the AID and IBRD/IDA projects did influence the speed at which these changes occurred. The fact that two of these projects were implemented at almost the same time increased their impact on housing stock as well as on the institutions undertaking them.

Yet, as noted previously, despite these advances there remain considerable limitations on the delivery of urban shelter. Throughout the series of Development Plans, implementation has fallen far short of targets, themselves well below needs. Certain categories of the urban populations are being adequately accommodated, other relatively neglected. Certain policies are still unclear, some exist only in published papers, others are counter-productive. These and other gaps and shortcomings have largely been recognized by Government, which has a commendable program to rectify some of the failures over the coming five years.

Since the private sector has demonstrated its ability to produce houses, albeit of a less-than-desirable standard, and since there is a latent capability of the public sector to produce an increased number of units and more efficiently, a principal recommendation relating to urban shelter is of a crash program of action-orientated studies, leading towards a more efficient and equitable use of resources, and thereby to a closer fit of housing supply, demand and need. Many of these studies are listed in the current (1979-83) Development Plan. Others include: the impact of zoning controls; improved data collection; uniformity of cost recovery principals; the effects of subsidies; eligibility criteria for public housing; policies on subletting; delivery systems for the poorest sections of the community and for middle-income employees; locational policies; infrastructure standards; the share of public finances devoted to housing for government employees and the public at large. Insofar as the present study had only a limited brief, no concrete recommendations have been made as to a desirable outcome of these studies, although some pointers have been provided.

One key analysis which should be undertaken is of the definition of target groups. Target groups may be stratified by income, by location and by type of employment: an exercise that does not require statistical provision, but which will enable a clear understanding of which groups are adequately catered for, which are privileged in having ready access to cheap shelter, and therefore which groups require greater assistance. This same exercise should also identify the roles of the various shelter agencies, clearly delineating the relationships between each, in order that gaps and overlaps

may more easily be noted and remedial action taken. At the same time, the findings would form a firmer basis for the conduct of the subsidiary studies recommended.

The chapter also makes recommendations concerning the operation in this country of international aid organisations. The suggested guidelines over the next five years may be summarized as follows:

- Beyond the projects presently planned or under discussion, there will be little capability in the public sector to undertake any new contractor-built or part-units; emphasis should be placed upon servicing land for private sector construction or for the speedier implementation of current public sector programs.

- If, however, needs and capabilities are identified for direct assistance, priority should be given to Kisumu and Eldoret: possibly in the form of site and service plots in the former, and settlement upgrading in the latter.

- All forms of assistance should encourage the growth of self-reliance. This would encompass, among other things, support for the development of a housing cooperative organization; insistence upon replicable projects; positive approaches to the generation of surpluses; and institutional support to the smaller local authorities.

- Technical assistance should be offered to central government for the preparation of detailed policy statements.

However, even with a coherent statement of policies, it is not necessarily the case that they will be implemented. Some of the policies will be achieved through regulatory instruments; others by force of argument and conviction. It is therefore also recommended that the principal foreign aid agencies agree with the Kenya Government on the framework within which all their major shelter projects be initiated. For - desirably or regrettably - it is through these projects that much leverage is obtained on changes in policies and attitudes nationwide.

More specific recommendations on future AID schemes appear at the end of this chapter.

2.0. The Economic Growth of Kenya

2.1. PRODUCTION

Kenya's economy has been growing over the past decade at an average rate of 5.3 per cent annually: GDP from K£630 million in 1968 (at 1977 prices) to K£1,620 million in 1977. The overall performance, however, has been short

of the national targets. With a population growth rate of nearly 3.5 per cent per annum, GDP per capita has risen only by 1.8 per cent annually, to reach K£113 in 1977.

Agriculture remains the mainstay of the economy: in the monetary and non-monetary economy, its contribution has grown from 33.0 per cent of GDP in 1967, to 37.7 per cent by 1977. (see table 1) Of the principal agricultural crops marketed, coffee and tea between them contributed 69 per cent of value in 1977; cereals (wheat and maize) and livestock were also significant in the monetary economy.

Manufacturing industry has shown a steady growth, from 10.0 per cent of GDP in 1968 to 12.7 per cent in 1977, the quantity index of manufacturing production having risen by 9.1 per cent annually over the period. This, indeed, was the only major sector of the economy to have exceeded the plan targets. About one third of the sector's output was of manufactured food products; and growing emphasis has been placed on a policy of import substitution. Wage employment in the sector was almost 95,000 in 1977, of which 98 per cent was concentrated in the urban areas of the country, and 50 per cent in Nairobi alone.

The table below indicates changes in certain other key sectors over the decade:

Table 1. :ECONOMIC GROWTH, 1968 - 77

	% of GDP, Current Prices	
	1968	1977
agriculture	33.0	37.7
manufacturing	10.0	12.7
building and construction	5.1	3.2
wholesale, retail trade, restaurants and hotels	10.3	11.7
transport, storage, communications	8.3	4.3
finance, insurance, real estate and business services	3.8	4.8
producers of government services	13.2	12.9
+ + + +	+	+
capital formation	14.9	24.0
private consumption	68.3	65.9

source: Economic Surveys

It will be noted that capital formation has increased dramatically (albeit somewhat exaggerated by measurement at current prices in this table) but the share of building and construction has fallen. Some reasons for this will be analyzed in the section on the private housing sector (5.5) but are principally the limitations of effective demand for approved houses and the shortage of serviced land. However, the imperfections in reporting may also account for a low figure for this sector in 1977 and a much higher in 1978.

The balance of payments current account has been in deficit for most of the decade. Nevertheless, the value of exports has risen by 4.1 per cent per annum (constant prices), the list being headed by food and beverages, predominantly of coffee and tea (between them 58 per cent by value of all exports) and re-exported petroleum products (15 per cent by value). Tourism contributes significantly towards reducing the deficit, led by the wildlife and coastal attractions. Apart from Nairobi, which had 42 per cent of the country's hotel beds, only Mombasa island, with 8 per cent of beds available, was significant among the other towns.

2.2. EMPLOYMENT

Wage employment in non-agricultural enterprises rose over the decade from 500,300 to 632,600 (averaging 2.5 per cent increase annually): this was markedly less than the increase in the potential labor force. Of the 1977 total, 64 per cent was in urban areas, and 37 per cent of the total in Nairobi. (Nairobi accommodated 75 per cent of all urban construction workers, and 73 per cent of those in finance and business.) Comparison of the growth of employment by sector over the ten years is not possible because of changes in classification.

2.3. EARNINGS AND INCOMES

Recognizing gross disparities in income between urban and rural areas, and between different groups in these areas, the government has consistently held a long term objective of minimising income differentials. This is to be achieved by progressive taxation, by development of the rural areas, by increasing access to social services and by a partial control of wages. In 1974, 1975 and 1976, indeed, no wage increases based on productivity were permitted; increases were only to be related to, and lower than, the rise in the cost of living. Higher minimum wages were established in October, 1977: shs 350 per month in Nairobi and Mombasa, and shs 300 in other urban areas. The controls were relaxed in 1978.

Measured in real terms, mean wages have fallen over the decade by an average of 2.0 per cent per annum: to K£671 per employee in 1977. There are substantial differences between towns: median wage earnings of K£330 in Nairobi, K£282 in Mombasa, K£219 in the next four largest towns, and K£192 in all other enumerated centers (1975 figures). Not only does the median thus rise with increasing town size, but so does the proporation of employees with earnings exceeding shs 1,000 per month; the proportion earning under shs 400 correspondingly falls with town size. Nairobi and Mombasa, however, have a markedly higher than average proportion of workers earning under shs 200 monthly.

When the towns are grouped by province, those in the Western and, to a lesser extent, in the Eastern Provinces show a marked concentration of low wage earners.

Data on wage earnings are, however, not readily translated into household incomes: the median wage earning for Nairobi in

1975, for instance, was Shs 550 per month, whereas the median household income had been estimated as Shs 1,500. For, apart from the addition of informal sector and unearned incomes, it is not uncommon for families to have more than one wage earner nor for an individual to hold more than one job. There has been no comprehensive urban household income survey in Kenya, although the tables below give an indication of the position.

TABLE 2 NAIROBI HOUSEHOLD INCOME DISTRIBUTION, 1977

cumulative % of households	monthly household income, Shs/month	
	Range	Mean
0 - 20	0 - 500	343
21 - 40	551 -1,050	667
41 - 60	1,051 -2,000	1,277
61 - 80	2,001 -4,000	2,090
81 - 100	over 4,000	5,438

source: Research Division, Nairobi City Council

TABLE 3 WAGE EARNINGS DISTRIBUTION PATTERNS, 1975

(Shs/month)

	Nairobi	Mombasa	Next 4 largest towns	other towns	rural areas	Kenya
median	550	470	365	320		400
top decile	2,400	1,660	1,350	1,250	800	
percentage earning:						
Shs 200	18	21	10	24	33	16
Shs 400	36	43	55	57	59	50
Shs 1000	28	21	15	13.5	5	14
Shs 2000	12.5	6.5	5	4	1.5	5

source: "National Urban Development Strategy for Kenya", Table 4.9

3. Urbanization Trends

3.1. URBAN GROWTH

In 1969 - the date of the most recent national population census - there were some 1,000,000 people living in Kenya's urban areas (according to the local definition of an urban place being a settlement accommodating over 2,000 people); this was 9.9 per cent of the total population of the country. Using the United Nations cut-off point of 20,000 people as constituting an urban area, Kenya was 7.6 per cent urbanized in 1969.

There had been a reported urban growth rate of 7.1 per cent per annum from 1962. (The figure is not precise because of the subsequent inclusion of several very small towns and because of the extension of some urban boundaries; the addition of some population formerly classified as rural is, however, offset by the exclusion from the urban statistics of some effectively urban population living outside the formal town boundaries.) With a national growth rate of population around 3.5 per cent annually - one of the highest in the world - 17.8 per cent of the total national growth between 1962 and 1969 had taken place in urban areas.

There were 48 urban places in Kenya in 1969, of which 11 had a population exceeding 10,000, between them accommodating 926,000 people. These had grown at an average rate over the previous ten years of 6.9 per cent annually, rather more slowly than the smallest centres. Of the total urban population, 80 per cent was located in Nairobi and Mombasa (taking 47 per cent and 23 per cent respectively).

For the eleven municipalities (Table 4) the "most-favored" estimate is that their population will have grown by 7.1 per cent per annum from 1969 to 1978, together accounting for 20.3 per cent of the national growth during that period. The highest rates of growth will have been experienced by the smaller towns; the share of Nairobi and Mombasa will, than have declined slightly from 80 to 78 per cent, but with Nairobi still maintaining its dominant position.

TABLE 4 STATUS AND POPULATION GROWTH OF MUNICIPALITIES

	designated growth centre	population, '000 1969	1978	+ % p.a.
Nairobi		509	959	7.3
Mombasa		247	401	5.6
Kisumu		57	115	8.0
Nakuru		47	78	5.7
Eldoret		18	47	11.1
Thika		23	47	8.0
Kitale		12	24	8.35
Kakamega		6	18	12.65
Nyeri		10	23	9.6
Embu		4	14	15.0
Meru		5	12	11.55
all municipalities		938	1,736	7.1

Notes: see next page.

Note: Kitale and Meru were designated growth centres in the Development Plan of 1974/78.
1969 populations from the Census report.
1978 populations from "Urban Population Projections during 1969 - 2000", Ministry of Finance and Planning, October, 1974 : 'low' projections for Nairobi and Mombasa; 'high' projections for all other municipalities.

3.2. MIGRATION

Rather more than half of this urban population growth is attributable to migration from the rural areas; various studies have been undertaken to determine the nature of and the reasons for this migration. The conclusions are broadly similar to those found for most other developing countries: migration is predominantly of young and educated males, often having friends or relatives already in the city, and more often than not coming from rural areas where there is a shortage of cultivable land.

The main reason for migration - which is less than 15 per cent per annum of the growth of the rural population - is not so much the "bright lights" of the towns and their physical and social amenities, but the greater possibility of obtaining a well-paying job there.

Urban wages are thus one side of the equation: they averaged 270 per cent of rural wages in 1969, falling to 239 per cent in 1974. Nevertheless, the number of job opportunities has been increasing in the urban areas, combined with growing pressures on agricultural land. To illustrate, an inter-ministerial working party on regional development strategies (1972) found that even in 1970 one quarter of Kenya's population was living in rural areas at a density approaching or exceeding the carrying capacity of the land. Reference to this fact will be elaborated in the chapter on rural housing.

Although an increasing number of people are staying in the towns - in 1974 only 27 per cent of urban residents were born in those towns of their residence - many migrants claim that their stay is only temporary: to earn sufficient money to buy or to develop a farm or a better house in their rural home areas. This desire is borne out by statistics, which show that although gross in-migration to Nairobi is running at the rate of 8.1 per cent per annum of the total population, out-migration is 3.7 per cent of the total; net migration is thus 4.4 per cent. For other urban areas within the districts of Kakamega, Kisumu, Kericho, Nakuru, Kiambu, and Machakos, the comparable figures are: in, 4.5 per cent; out, 2.6 per cent; net, 1.9 per cent.

3.3. CONSEQUENCES OF MIGRATION

With this continuing migration, the urban population has increased faster than has the number of paid jobs in the formal sector: compared with a 41 per cent increase in population in the municipalities between 1969 and 1974 there was only a 26 per cent increase in formal sector jobs. That there is this gap, however, does not necessarily mean that there has been increase in the rate of unemployment;

for an increasing proportion of the urban population is engaged in the poorly-enumerated informal sector. Indeed, the number of people without jobs and actually looking for one is probably in single figures: a 1975 survey in a poor settlement in eastern Nairobi found 9.9 per cent of the labor force in that category.

It makes sense to distinguish between two groups who make up the informal sector: those who are engaged in it because it is profitable and an acceptable alternative to formal sector employment; and those who are occupied in the informal sector as a job of last resort, i.e. those who would prefer a formal job, but because of the high level of demand, are unable to get one. Those in the latter category, together with some casual and part-time formal sector employees, make up what the ILO has termed the "working poor", those households with a 1972 income of less than Shs 200/ per month. 24 per cent of males fell within that category in 1972, and the present proportion of working poor would almost certainly have increased as has their income, of course, but to a lesser extent than the urban average.

3.4. SQUATTER SETTLEMENTS

This level of poverty in the towns has had a number of consequences; its most severe physical manifestation being in the growth of "squatter areas". (In Kenya, these are taken to include all substantial areas of illegal houses, regardless of the rights over the land of the owner of the structure.) These areas are typified by houses of simple and usually low quality construction (from mud-and-wattle to fairly large timber structures, sometimes interspersed with multi-room stone dwellings), often in a poor state of repair; with elementary or no supply of piped water, nor adequate sewage disposal facilities, and rarely any electricity supply. Other environmental conditions range from poor to atrocious, in part resulting from the high densities of these squatter areas. Problems of health are severe, posing a constant threat to the spread of communicable diseases; fire is endemic and security is bad, on account of the absence of external lighting , the heterogeneity of the population, low quality of structures and low income.

On the other hand, these settlements do have many positive aspects, often overlooked by the policy-makers or over-romanticised by planners and sociologists. Many have built and organised their own schools, health and community centers, and exhibit a considerable degree of social control and social organisation. The dwellings, although not meeting the minimum requirements of the local authorities (often to a marked degree, sometimes only in detail), do offer a roof over the heads of the poor at a price they can afford and, when sub-let offer often the only source of income to their owners. They are often constructed in locations more central than those offered by public housing programs, thus being closer to formal sector jobs and to potential sources of informal income.

Because of the nice distinctions between what is legal and what is illegal (many houses built according to the Council's bylaws have subsequently been illegally sub-divided into 'flats') and because of the considerable difficulties involved,

there has been no comprehensive estimate either of the size or of the growth of these squatter areas in Kenya's towns.

A survey of slum areas in Nairobi was carried out in 1971 by the University's Housing Research and Development Unit, estimating that about one third of the city's population lived in uncontrolled and illegal housing. (This is probably a much greater proportion than two or three years previously: between 1969 and 1971, the population of the most notorious slum area of Nairobi, Mathare Valley, had grown from 19,000 to 53,000.) The Research Division of the City Council's Town Planning Section now estimates that the number of housing units in this same category had grown to 65,000 by 1978, thus forming 38% of the city's housing stock.

Waweru & Associates estimated, in 1976, that 40 to 45 per cent of Kisumu's population lived in unapproved housing. In 1969, of Mombasa's housing stock, 37 per cent was 'unplanned temporary' and a further 12 per cent 'planned temporary'; these proportions are now probably higher.

Some of the social consequences of this growth in the poor population of the cities have already been mentioned. That there has been a growth in crime is undisputed; but whether it has come about because of the absolute level of poverty, whether it has come about because of changes in cultural values and the 'anonymity' of the towns, because of the relative levels of poverty and wealth, for all of these or other reasons, is not known.

Different surveys have found various health-related problems, due more to poverty than to the condition of the physical environment. In Masaku, for instance, 33 per cent of the children have the internal parasite Giardia Lamblia, 15 per cent Ascaris (roundworm). In Kibera, Nairobi, 28 per cent suffer from protein-calorie malnutrition. Many children, especially in Mombasa and Kisumu, suffer from nutritional anemia.

That the migrants are predominantly male also has consequences. (Nairobi's sex ratio was 60 per cent male: 40 per cent female in 1969). It appears to have led to an increased amount of prostitution; it has increased the demand for single rental rooms; and has increased the level of remittances from urban to rural areas. The consequences, however, together with the relatively high level of education of the migrants, are probably more severe upon the rural areas; they are therefore touched upon in Chapter III.

3.5. LOCAL COUNCILS

The local councils have been unable to cope with the demand for urban services at the prevailing standards: piped water to every home, water-borne sanitation, paved roads, full accessibility to primary schools and health centers; the provision of social and community services, adequate bus transport; above all, two-roomed houses.

The Development Program for the municipalities reported in the 1970-74 Development Plan allocated 70 per cent of capital expenditures to Nairobi, with 58 per cent of the municipal population. The annual average per capita expenditure for all municipalities amounted to little over Shs 166/ per head of population. This amount was considerably higher than that actually recorded over the years 1969-71, for which development expenditure amounted to some Shs 1,700 per head of the increased population. And since a proportion of this was devoted to improving services to the existing population, no further evidence is required to illustrate the fact that finances were grossly inadequate to meeting the towns' needs.

Excepting Nairobi, 50 per cent of the development expenditure for the municipalities was derived from the National Housing Corporation, 14 per cent from the Local Government Loans Authority, 35 per cent from the Councils' own resources, and the small remainder from Roads and other specific grants from central government.

3.6. URBANIZATION POLICIES

The Development Plan for 1970 - 74 noticed advantages of continued growth of Nairobi and Mombasa, and pointed out:

> "It is not therefore the policy of government to impose mandatory and artificial restrictions on private commercial and industrial development in Nairobi and Mombasa, for such a policy would discourage the economic development of the country as a whole. Nevertheless, positive steps will be taken to decentralize future urban growth to the designated major growth centres..."

It continued:

> "It is important that the growth of the urban population should be distributed over a relatively large number of centres and not mainly concentrated on the two biggest towns... It will be an objective of Government policy to promote the growth of a number of towns to a size where they are large enough to provide the people of the surrounding districts with many of the facilities and amenities available in a modern city. New factories and other enterprises will be grouped in the designated growth centres, and thus act as a stimulus to the further growth of output and employment, instead of becoming increasingly concentrated in Nairobi or scattered at random around the countryside."

The Town Planning Department of the Ministry of Lands (in 1970; it has since become the Physical Planning Department of the Ministry of Lands and Settlement) classified urban areas into a hierarchy:

Nairobi and Mombasa were recognized as the dominant urban centers; other major towns, classed as "growth centers", were Kisumu, Nakuru, Eldoret and Thika (with anticipated populations exceeding 200,000 by the end of the century), and Kakamega, Nyeri and Embu (with year 2000 populations over 100,000). Kitale and Meru were added to this list in the 1974-78 Development Plan. Other urban areas are divided into four categories: urban, rural, market and local centers. This topic is discussed more fully in the chapter of this report dealing with the rural areas.

There were, however, few effective mechanisms for implementing these policies. Industrial estates have been established in the principal towns; but have failed to provide the stimulus necessary for the attraction of any major development. The relative failure of the program led to a major reappraisal of policies in 1978. The outcome of this reappraisal is reported upon in the section on "The Next Five Years" p.72.

4. The Housing Situation Ten Years Ago

4.1. POLICY STATEMENTS

Towards the end of the last decade the national housing policy was still somewhat embryonic. It was being shaped, inter alia, by the report of a UN Mission commissioned just after Independence, by a Government Sessional Paper and by the resulting parliamentary and public debate.

The 1964 UN Report of Bloomberg and Abrams focussed on the scale of the housing problem, noting that "the resources that can be devoted to housing in Kenya will not in the foreseeable future permit housing of permanent construction in urban areas either of sufficient quantity or without subsidy, within the means of a vast number of families... Without the means to do otherwise, the only alternative is to attempt to control temporary housing and to make it conform as far as possible to a plan by which it will eventually be replaced when families can afford it."

Sessional Paper No. 5 of 1966/67 noted that the urban housing situation had reached a "critical stage" and proposed "urgent measures" to deal with it: the paper reiterated the need for the development of self-help techniques, and went on to point out that "the mobilization of private capital for low-cost housing will be a significant part of the housing programme in urban areas...so that buildings are erected according to approved plans and specifications, and to avoid the creation of slums". One recommendation was that the old Central Housing Board should be reformed to accommodate functions wider than merely loaning housing finance to local authorities.

This recommendation was taken up in parliamentary debates, with suggestions that the new corporation should be more responsive to the needs of the poorer sections of the community. Nevertheless, in contrast to the emphasis of the official reports on appropriate standards, it was felt that higher standards should be achieved. Such feelings grew out of a past which produced the following quote: ("Some of the imperialists felt that a dog's house should be even better than

that of an African, and if you were to go round at that time and examine the house which dogs slept in, they were far better than the houses of the Africans.")

The formally-stated aspiration was that:

> "the prime objective of Government policy in housing is to move towards a situation where every family in Kenya will live in a decent home, whether privately built or state-sponsored, which provides at least the basic standards of health, privacy and security.",

although it was necessarily admitted that "it will take at least several decades to approach such a goal."

The 1970 - 74 Development Plan stated that an upper limit of K£1,200 per unit would be applied to schemes funded by the new National Housing Corporation (NHC); houses costing over that ceiling would be financed through the Housing Finance Company of Kenya (HFCK) and by the private sector. 85 per cent of Government development expenditures on housing for this period was earmarked for the urban areas; and, even so, the larger municipalities were expected to provide additional financing from their own resources and from other loans.

K£ 3.6 million out of the NHC's urban housing budget of K£ 11 million was set aside for site and service housing costing up to £300 per unit (sic). It later emerged, however, that the mechanics of such an operation had not then been fully investigated and that this scale of program was impracticable.

It was also stated in the 1970-74 Development Plan that high priority should be given to industrial housing: the NHC was given the responsibility of assisting private enterprises with loans for housing employees in the lower income brackets.

A Rent Restrictions Department had also been established within the Ministry of Housing in late 1966. The 1970-74 Development Plan stated that "it is believed that rent levels have been prevented from rising in a large proportion of the controlled premises": a statement which would have been difficult to substantiate.

The 1974-78 Development Plan did not report any significant shifts in policy, retaining the emphasis on urban and low-cost housing. It did state that "each housing unit constructed in urban areas shall have at least two rooms, plus its own kitchen and toilet", and made the first mention that it was Government policy to improve sub-standard urban housing. The focus of the Plan was more in improving performance, which had fallen far short of expectation in the recent past.

4.2. INSTITUTIONS

The Ministry of Housing, established in 1966, was divided into three departments: technical, rent restriction and administrative.

It was responsible for overall policy coordination, for the direction of the NHC and for the Housing Research and Development Unit of the University.

The National Housing Corporation, the principal implementation arm of the Ministry of Housing, had been set up in 1967 as successor to the Central Housing Board. It was authorized to lend to local authorities, to employers, individuals and housing cooperative societies, although in its early years funds were made available only to local authorities.

It derived its own funds as grants and as loans, the latter from the Kenya Government Development Fund and the Commonwealth Development Corporation. In turn, it on-lent to local authorities at 6½ per cent interest per annum, for 20 years in the case of tenant-purchase schemes, or for 40 years in the case of rental schemes. In keeping with the policy that "loans should be made available at the lowest possible rate of interest", the local authorities were empowered only to "reimburse themselves by charging an economic rent which is just sufficient to meet the capital cost of the loan plus cost of administration, rent collection, maintenance, etc.": after payment of a 10 per cent deposit, this meant that the balance was paid off over 20 years at 7 per cent interest on tenant purchase schemes, and 7½ per cent on rental schemes. In the chapter on Housing Finance more will be made of the NHC's role in distributing public housing funds.

The Corporation also acted as consultants for design and construction and supervised the actual construction work in the field on behalf of local authorities, as well as undertaking its own projects. There was, however, potential conflict as to whether it was the duty of the Corporation principally to implement Government policy, or to effect any projects of the local authorities which met the Corporation's technical requirements. One major problem that did emerge was the inability of the local authorities to utilise all of the money allocated to them, resulting in substantial idle surpluses. These funds were used, in one instance, in the construction of a high-cost housing estate in Nairobi, with costs averaging K£5,000 per unit.

The Ministry of Works was a substantial developer of housing units for occupation by government employees, on behalf of and from the budgets of other ministries. By 1969 there were nearly 19,000 government staff houses for rental.

By and large it was only the larger employers, and particularly the government and the para-statal organizations (Railways & Harbours, Posts & Telecommunications and the like) who provided housing for their workers in the urban areas. It was common practice for those in the higher income groups also to house their domestic servants.

The Housing Research and Development Unit at the University had been established in 1966 to "investigate practical problems of construction, site organization, financing of housing, and the savings patterns of urban households and their social

formation". Funded by the Ministry of Housing with additional external technical assistance, it also had some responsibility for developing courses offered at the Faculty of Architecture, Design and Land Development. Its first few years saw a steady stream of policy-oriented monographs on economic and institutional issues, together with the development of appropriate basic prototypes for low-cost housing, in a continuing attempt to focus on realistic solutions to the problems of the day.

The mortgage market for high cost housing was served by three institutions: the Housing Finance Company of Kenya (HFCK), a joint venture between the GOK and the Commonwealth Development Corporation, formed from an amalgamation between the Kenya Building Society and the First Permanent of East Africa; Savings & Loan Limited, a fully-owned subsidiary of the Pearl Insurance Company Limited; S & L, at the time, was being wound up, later to be revived, and finally the East African Building Society (EABS).

Average loans were of the order of £3,000 - for houses costing K£5,000 or so - and the minimum loan of the HFCK was K£1,200. Loan conditions varied: HFCK lent for up to 20 years at 8.5 per cent interest per annum; EABS for up to 15 years at 10 per cent; and Savings & Loan for 5 years at 8 per cent. The EABS had been particularly successful in attracting funds from small African savers, by virtue of offering a then high interest rate of 6.5 per cent per annum.

Between them, these institutions offered mortgages to only a few hundred individuals each year, but apparently meeting the effective demand for mortgages within the price ranges in which they operated. See further on this subject in chapter III.

Of the local authorities, only the Nairobi City Council was authorised to raise money other than through the government. The others, being reliant on national funds, generally used the services of the NHC to plan and develop housing projects in their areas.

The Nairobi City Council had been constructing relatively high-cost units for rental in the 1960's, but with a gradual change in direction to the supply of units for sale, through tenant-purchase or mortgage agreements. The early 1970's saw a fairly radical shift in policy, initiated through the Nairobi Urban Study, itself stimulated by concerns of the World Bank, and assisted by UNDP personnel. Although this study was primarily to design strategies for the physical development of the city, it reported with a comprehensive analysis of the problems of the city, stressing the necessity for integration of all policies and programmes and making recommendations on the development of site and service, self-help housing. The report was approved by Council and accepted by Government, and was effectively the precursor of the housing projects developed in Nairobi in the mid-1970's - Dandora, Umoja, Buru Buru and other low and medium cost estate developments.

4.3. THE INFORMAL MARKET

At the start of the present decade the majority of the population were thus unable to benefit from existing institutions offering housing, either because the numbers of houses available were too few for the demand, because the effective income limits for loans were too high, or because the people did not have the advantage of working for employers offering housing. There were, nevertheless, few families which were actually homeless in the sense of sleeping in the streets. In some cases, these disadvantaged families squatted on land on which they had no rights of occupation, building houses themselves out of whatever materials they could command.

More frequently, however, these families rented houses built illegally and generally far below any minimum standards imposed by the health authorities. The houses would have been constructed by the landowners (often themselves poor people) and were typically either of mud-and-wattle or timber units of rows of single rooms. The sources of finance for this construction remain unidentified: either from the developer's personal resources or supplemented by informal loans, the reported rate of interest on which was up to 100 per cent per annum. The terms on which these units could be rented allowed a rate of return on investment which was high in comparison with rates offered in the formal sector, but which was probably reasonable when compared with the risks involved (of fire, removal, of demolition by the authorities, or of default) and with the opportunity cost of money in the informal sector.

4.4. HOUSING PERFORMANCE

Of the housing recorded as completed in the late 1960's and early 1970's - and this included only "authorized" housing units - private building activity accounted for about half of the total value, the rest being government-sponsored. Reliable data are not available on the number of private units, but it is certain that public housing will have accounted for well over half of the authorized additions to the urban housing stock. Of the public housing completions, numbering around 2, to 3,000 annually in all municipalities, the bulk were completed through the NHC; the remaining few hundred were of institutional housing (financed by specific ministries), pool housing (financed by the Ministry of Housing for rent by government servants) and a few other staff houses.

Of housing developed by the NHC, 70 to 80 per cent of the number of units were in urban areas: tenant-purchase, rental and site and service housing. The latter represented the first attempts in contemporary times to provide this sort of accommodation (Kenya's first site and service scheme had, in fact, been completed in the early 1920's). Problems were multitudinous, including those of allocation and of appropriate standards. In the context of site and service schemes "many agreed with President Kenyatta's denunciation of ministers who advocated permitting 'native houses' for Africans in the urban areas, recalling that these were the sort of houses that Africans had to live in during the colonial days" (Werlin, p.229). It was not until 1973-74, with the

inception of the World Bank-sponsored Dandora community development project that site and service schemes were again becoming acceptable to the politicians.

Problems of allocation were, however, not confined to site and service schemes. In one tenant-purchase scheme in Thika, for instance, (according to a HRDU report), five out of every six houses were rented by the room, and the estate accommodated three times the number of households for which it had been designed. Landlords were collecting as rent double their payments to the Municipal Council.

It is clear from the statistics that there was an immense gap between the need for new housing and the official supply. (In Nairobi, it had been estimated that 33,000 new housing units were required between 1962 and 1970, whereas only 7,400 were actually built.) It is also true, as evidenced by the long waiting lists for public houses, that there was also a substantial shortfall between the supply and the effective demand.

That this was the case is partially a reflection of the extent of subsidy of practically all new housing that was constructed at the turn of the decade: of the below-market rates of interest charged by the NHC, of the rents of public housing being charged on historical cost, of free or very cheap lands rents and premia charged on government land, subsidized rents charged by employers, income tax relief on interest on mortgages for owner occupiers, and so on. At that time, however, most - if not all - of these subsidies were implicit, and their effects had not been fully investigated. This is still the case.

The study team notes with some apprehension the similarity between then and now in policy statements, problems and approaches. At the same time satisfaction is found in the increasing committment to policies and the accelerated production of houses. An account of this change follows.

5. The Present Housing Situation

This section discusses the present situation: the policies in force over the past few years, and their impact; the main institutions concerned with shelter, their organization and performance; the larger projects that have been initiated in the recent past (excluding the AID housing guaranty projects, discussed in section 7.0), their objectives and impact; and briefly discusses the strengths and weaknesses of the present situation.

5.1. POLICIES AND POLICY STATEMENTS

The main policies are spelled out in the report on the Third Development Plan:

> "The Government's long-term objective is to build as rapidly as possible a national stock of housing of a minimum standard with basic standards of privacy and security providing a healthy environment for all.

"The specific policies and objectives during this Plan period are:-

(i) To accelerate housing development using both Government and private resources;

(ii) To retain, and develop, all the existing housing agencies, both public and private, and to direct housing funds, so that the maximum number of housing units in all cost brackets in proportion to the need of the different urban income groups are developed;

(iii) To ensure that housing design and construction conform to Government standards and that each housing unit constructed in urban areas shall have at least two rooms, plus its own kitchen and toilet;

(iv) To ensure (a) no additional unauthorized housing settlements are erected, (b) slums are removed when satisfactory alternative housing has been found, and (c) sub-standard urban housing is improved.

(v) To promote self-help in housing construction in urban and rural areas;

(vi) To enforce rent control measures;

(vii) To intensify the use of local materials and increase employment opportunity in the housing sector."

The manner in which these objectives may be achieved in both public and private sectors is greatly influenced by the government's policy instruments and the way in which they are applied. The principal policies are discussed below.

5.2. THE PUBLIC SECTOR

Recognizing that rural housing can be "left primarily to private and self-help efforts which, to date, have been adequate to maintain the number of units required if not to improve on their size or to increase their amenities", government efforts have largely been concentrated in the urban areas. The main target group has been the urban poor, since "it is the Government's policy to direct a large proportion of funds available to the provision of housing for the low income groups."

This was to have been achieved by a directive that all new public housing (with the exception of that provided through the HFCK and for specific groups of government employees) should cost under K£1,200. (It was, however, subsequently noticed by the General Manager of the NHC that these targets were "never possible of achievement".)

On the question of tenure, MHSS issued a Directive in 1973 that the NHC should discontinue lending funds for tenant-purchase housing schemes (because of a high level of defaults), supplemented by a subsequent instruction that 90% of all available Government funds should go to site and service or

some form of aided low-cost housing and only 10% be used for rental schemes".

The emphasis on site and service development - which has been policy since the publication of the 1966/70 Development Plan but which has been slow in implementation - has created some controversy, as noted below. Nevertheless, most public statements have consistently supported the policy. (The General Manager of the NHC: "The highest priority should be given to the development of site and service projects"; and the report of a trade union workshop on housing for low income workers, "Under no circumstances should pressure to provide the currently proposed site and services schemes be let up".)

There is no clearly stated policy on the allocation of housing funds between urban areas, apparently being loosely based on studies of housing needs by the MHSS and on assessments of the organisational capabilities of the various national and urban authorities, as well as on initiatives by the different implementing agencies.

5.2.1. COST RECOVERY AND SUBSIDISATION

Cost recovery principles for public sector tenant-purchase and site and service housing schemes broadly follow the same principles. Thus charges for certain items, such as primary infrastructure and community facilities, are ordinarily recovered through user fees and rates. Land costs are borne by the Ministry of Lands and Settlement and are recovered through stand-premia and annual rents based on the unimproved market value of the land. Certain administrative costs and all other costs are charged to the project; the amounts actually charged to project beneficiaries vary according to the proportion of land in the scheme to be allocated for non-residential uses. Cost recovery principles do, however, vary from one local authority to the next, and even within a single authority over time.

In their analysis of the pricing of housing in Nairobi, Coopers & Lybrand, consultants to the NCC, recommended:

> "So long as there continues to be a serious housing shortage in Nairobi, so that substantial profits can be made from sub-letting, prices should be set at a level which will enable a proportion of these profits to be secured by the Council so that they can be used to benefit the community as a whole by various means including the provision of additional new housing.
>
> "Prices should be set at levels which will minimise, if not eliminate, the burden on the general rate fund of the cost of providing housing-related services; the contribution made by occupants of new housing schemes should at the very least cover the full additional costs of providing them with services."

Although the consultants' report was formally accepted by Council, no action has been taken on this recommendation.

Some small element of direct cross-subsidy was introduced into the Dandora (Nairobi) project (see later under 6.5.2.) It is also provided for in the World Bank's second urban project to benefit allottees of the cheapest site and service plots (In Mombasa and Kisumu) and some of the displaced households from Mathare Valley in Nairobi. For the latter proposal, however, the small benefits that would be achieved appear to be largely outweighed by administrative complexity; the proposal is, however, being pursued on the ground, that any price savings to the poorest people are beneficial. Although this approach could be repeated, its impact cannot be substantial; and the arithmetic determines that the amount of subsidy would necessarily vary from one project to the next.

Most of the hidden subsidies noted as present ten years ago are still in force but their impact has still not been investigated. They are discussed more fully in paragraphs 4.1.3. and 5.1. of chapter III.

5.2.2. ALLOCATION

With few exceptions, allocation of houses and plots in public rental and tenant-purchase schemes not intended for specific beneficiaries is by ballot from a list of eligible applicants. Favoritism of one kind or another has, however, been alleged in many cases. This is hard to substantiate and, so far as is known, there has been no thorough-going investigation of suggestions - mainly from the newspapers but also in the Annual Reports of the NHC - that allocations have been made in return for financial or other personal favors. The team is informed that a scrutiny of confidential records would show that houses and plots are allocated to cabinet ministers and other influential people who are clearly ineligible. Conversations also show that there is a wide-spread lack of faith in the impartiality of some allocating committees, and that this is one reason for a part of the target populations not bothering even to apply for a house or a plot.

Eligibility criteria vary. They generally require a minimum length of residence or employment in the town in question; they exclude those people already owning property (sometimes only residential, sometimes all types of property) in the town; they usually require that the applicant have his or her family living with him; and, in the case of NHC schemes, they also require that the applicant should not be more than 50 years old.

All schemes have minimum and maximum income requirements, which in practice are very difficult to enforce. For NHC site and service schemes, for instance, the applicant should have "a stable income of between KShs 300/ and KShs 1,200/ per month", a requirement related to repayment charges calculated several years ago. In the event, these limits require that the low income applicants must sublet rooms in order to be able to afford repayments; they also exclude other potential beneficiaries who, by virtue of having an income not greatly above the maximum, are incapable of

securing alternative authorized accommodation. Otherwise, attempts are generally made to relate incomes to required repayments, in that payments (for housing and sometimes also for related services) should not exceed 20-30 per cent of income. (An HRDU/MHSS study, however, investigating several local authority housing schemes, found few in which this match had actually been achieved.) One notable exception to the general rule of matching incomes and costs is the Mathare Valley settlement and resettlement scheme, for which there are maximum but no minimum income limits specified.

Several alternative approaches have been suggested to the application of income limits. These approaches range from the present practices of allocating to those in a predetermined income band regardless of costs or of fixing monthly incomes as a strict multiple of costs; to the practice (as in the Umoja and Second World Bank projects) of imputing to the allottees as potential income from subletting, then relating the total possible household income to repayments required; to the extreme view that since incomes are anyway often misstated in application forms, then it is a waste of administrative effort to attempt even to impose income limits.

On balance, arguments of equity would seem to demand that maximum income limits be set for public housing schemes. Also, since it is politically difficult to repossess houses or plots for which loans are not repaid, it would also seem necessary to determine that an applicant is able to meet the charges. Within these limits it would also be realistic and desirable to assess the ultimate income-earning potential of the house in order to determine the ability to pay. The main observation here, of course, is that repayment charges are fixed at the time of allocation and not changed as ability to pay changes over time thus effectively ruling out many low-income families. More on this in 5.2. of chapter III.

5.2.3. BUILDING STANDARDS

The Building Code comprises two distinct Local Government Orders, the Grade I and the Grade II By-laws. A local authority may declare in which areas the two standards are applicable. (The Grade II By-laws permit structures of lower quality, covering such matters as plot size and coverage, room dimensions, lighting and ventilation, and construction.) In many respects these regulations are flexible, allowing certain by-laws to be waived by the responsible council, for standards to be reduced on the advice of the Medical Officer of Health or of the Chief Health Inspector. It is perhaps this extreme flexibility which has discouraged interpretation, so that often the by-laws are applied strictly to the letter even where circumstances would indicate relaxation.

Much criticism has been levelled at these two sets of regulations in that the way they are applied implies building standards that cannot be afforded by a substantial proportion of the population. The argument runs that their enforcement

leaves the poor no alternative but to construct housing illegally which, since beyond the control of the authorities, is far below any acceptable standards.

A further requirement is that the minimum dwelling should consist of two rooms plus kitchen, toilet and shower. Strict enforcement of this directive would put the price of new housing out of the reach of the majority of the population. Although a certificate permitting occupation (and sale) of the dwelling is not issued until this criterion is fulfilled, in practice it is not rigidly applied. The Umoja scheme (HG project 003) is a case in point where one-room dwellings were constructed. In site and service schemes a formal requirement is that the minimum dwelling should be built within eighteen months of allocation; temporary occupation is permitted during this period; and, where circumstances make the time limit difficult to adhere to (for some building groups, for instance) a blind eye is turned.

The World Bank's second urban project specifically exempts a certain group of beneficiaries from the requirement of building an acceptable dwelling within a specified time period. These are some - but not all - of those poorest squatters to be displaced from Mathare Valley (see 6.5.3. below), for whom alternative accommodation must be found but many of whom would be unable to afford any form of conventional dwellings in the near future.

Under the Local Government Ordinance, municipalities are empowered to control the use of land by providing by-laws regulating zoning. Thus, minimum plot sizes may be prescribed, the extent of plot coverage and the predominant use to which the land is put; areas in which flats are permitted may also be delineated. As a control over the type and density of use, this is a simple and effective regulator. In Nairobi, for instance, it has been used to preserve the broad pattern of development established in the 1948 "Master Plan for a Colonial Capital". (While there are many good reasons for having done so, it does constrain residential development.

The Commissioner of Lands (in the MLS) may also exercise controls: together with the local authorities, over subdivision of land; or by issuing restrictive covenants on the type and quality of development permitted, and so on.

5.2.5. LAND PURCHASE

With the exhaustion towards the end of the last decade of much of the stock of public land around the main towns suitable for low cost housing, the provisions of the Constitution and of the Land Acquisition Act were utilised to build up a reserve of land for this purpose. Peripheral land was acquired around many of the larger urban centers, but the problems of land shortages remain. There are two principal constraints upon expanding the government's program of land purchases: the availability of finance (the budget currently stands at about K£600,000 per annum; and international donors are unable or unwilling to finance the purchase

of land); and the reluctance of landowners to sell, a reluctance which has been manifested in the past by the exertion of political pressures. This resistance to compulsory purchase is occasioned both by relatively low prices paid (the value of the land being determined by reference to recent recorded transactions, for which prices paid are generally substantially under-recorded); and by a customary understanding of land as not being a commodity which can be traded.

The present policy is to continue acquisitions for public purposes as and when the land is needed, the Chief Valuer liaising with the Director of the Physical Planning Dept. for this purpose. There are insufficient funds to permit the establishment of an urban land bank; and, in view of the security risks which would attach to such an operation, there are no forward plans for compulsory land acquisition. It must, however, be noted that the government has recently been reviewing policies on land, including plot allocation procedures.

The coming months should indicate whether compulsory acquisition may become politically easier, and it could be that an easing of this constraint would also permit an increase in public funds available. Nevertheless, the problem will remain of a shortage of public land for urban development. That land is not in public ownership does not, however, necessarily mean that it cannot be developed optimally. If the present controls over land use were supplemented with punitive taxes on undeveloped land, development could be directed more forcefully than at present. The public sector would remain responsible for installation of infrastructure, which would be designed to accommodate only the desired uses; this could be supplemented with loans for construction of low-cost housing, to which conditions would be attached on the type of development and methods of disposal. Under conditions of housing scarcity, this solution is less than ideal; but in the prevailing circumstances, is deserving of further detailed attention.

5.2.6. RENT CONTROL

The Rent Restriction Act, administered under the MHSS, is discussed in chapter III, section 5.2. Whether subletting is permitted in publicly-sponsored housing schemes or not, it has been recognized as infeasible to attempt any form of control over rents charged by the allottees. The principle means of reducing rents charged in the private sector is seen by government as the promotion of the construction of more housing units. In view of the ineffectiveness of formal rent control measures, this view would seem to be correct.

5.2.7. TAXATION (see also paragraphs 4.1.4. and 5.1. in chapter III)

Rates are levied by local authorities on the unimproved value of sites, even though the Rating and the Valuation for Rating Acts also allow property taxation on a different basis. It has been recognized that the present practice causes some inequities; its operation in Nairobi and Mombasa is currently being reviewed.

A capital gains tax, inter alia affecting land transactions, was introduced in 1975. There is reported to be widespread avoidance of the tax, and it is believed to have raised the market price of land, despite a recent reduction of the rate by 50%.

Death duties, payable on property that changes hands when a person dies, has the effect of promoting subdivision of the larger properties.

5.2.8. SLUMS AND DEMOLITION

Although the various acts and regulations provide a definition of a substandard dwelling, there is no clear statement on what constitutes a slum. Nor is one necessary at this time, for the scale of the problem is such that any marginal definition would be of no more than academic importance.

The government's presently-stated policy - to remove slums only when alternative accommodation is provided, and to improve substandard urban housing - has been explained as being held for both humanitarian and economic reasons: that is, redevelopment of slum areas is rarely practicable or desirable. Nevertheless, the NCC is frequently reported as demolishing slums within its boundaries: there were, for instance, six such reports between October, 1977 and March, 1978. (If this has also happened in other towns, it is rarely reported in the national press.)

The Development Credit Agreement for the World Bank's second urban project, signed after the latest round of demolitions in Nairobi, states:

> "Each municipality/Nairobi, Mombasa and Kisumu/ hereby affirms that it is its policy to discourage erection of any unauthorized Dwellings but undertakes not to engage in substantial demolition of Unauthorized Dwellings existing at the date of this Agreement in areas subject to its jurisdiction. Accordingly, subject to the Borrower's /GOK/ policies in force from time to time, none of the Municipalities shall damage or destroy any Unauthorized Dwelling or evict the occupants thereof unless/ adequate notice has been given and the owner has requested the action or, in the case of public land, there is an alternative use intended or alternative housing has been provided or the settlement in question is an extraordinary health hazard/."

With the inclusion of several "squatter upgrading" schemes within this World Bank project, the policy on slum improvement is now being translated into reality.

5.3. THE BUILDING INDUSTRY

Amongst other moves to encourage the construction industry, the Government has established the National Construction Corporation for the promotion of Kenyan contractors; and, under the direction of this Corporation, the National Construction Company, to provide management assistance to Kenyan sub-

contractors. The majority of large-scale building and civil works contracts are, however, still presently being executed by large and medium sized established contracting firms.

In 1972 foreign exchange accounted for some 30 to 40 per cent of housing construction costs, through the importation of materials and fittings;

Residential Building Cost Index: December 1972 = 100

	September 1978
Materials	230.1
Labor	159.0
Buildings	212.5

Although some research has been carried out into local building materials and further studies are planned, it appears that - apart from the standard measures for the protection of domestic industries - there are no specific policies or instruments for the promotion of local building materials.

5.4. INSTITUTIONS AND THEIR PERFORMANCE

5.4.1. Coordination of implementation of plans at a national level is effected by the Ministries of Finance and of Economic Planning (a single ministry until late 1978). These ministries oversee fiscal and financial policies which have an impact upon private house builders, as well as allocating funds for the following categories of public housing:

- Tenant purchase and rental housing developed by and for local authorities under the auspices of and with loans from the NHC;
- Staff mortgage housing, providing for home ownership by Civil Servants, financed by the MHSS and with mortgage finance from the NHC;
- Pool housing for government employees, financed by the MHSS, planned and maintained by the MOW and administered by the Office of the President;
- Institutional housing, financed by specific ministries;
- Housing for statutory organizations; and
- NHC's rural housing fund.

These ministries have no direct control over the few public housing schemes initiated by local authorities outside the NHC program and externally-funded projects.

5.4.2. The Ministry of Housing and Social Services (the two were amalgamated in 1974) remains responsible, through its Housing Department, for policy formulation, for implementation of public housing programs through the NHC and HFCK, for effectuation of the Rent Control Act, and for the operations of the HRDU. It is now divided into three sections: Planning,

Economics and Estates; both its establishment and staffing have been considerably strengthened in recent years.

5.4.3. Among other ministries with responsibility for housing, the Ministry of Works continues to develop the greater number of units for government employees. This ministry, together with other agencies, was reported to have constructed 4,600 public "residential units", at an average cost of K£3,000 each, over the five years 1973-77.

5.4.4. The Ministry of Local Government has the responsibility of overseeing the operations and financing of the 61 municipal, county and town councils in Kenya. Among its other duties, it presently is running the affairs of Mombasa and Kisumu through appointed Municipal Commissions.

5.4.5. The Ministry of Lands and Settlement has responsibility for the control, acquisition and disposal of government lands in Kenya and, through its Physical Planning Department, "for liaison with development authorities at national, provincial and district level, /for initiating/liaison with development agencies and by /preparing/ urban studies as well as close involvement in the preparation of district development plans".

5.4.6. Matters of broad environmental policy and research come under the aegis of the National Environment Secretariat, a bureau established in 1974 under the Office of the President. The brief of the Secretariat is to coordinate public actions to ensure optimum use of the environment and thus, where necessary, to synthesize the actions of operative ministries in matters which are not the direct responsibility of the Ministries of Finance and of Economic Planning nor of the Physical Planning Department.

5.4.7. The staffing of the Housing Research and Development Unit has been expanded since it was created at the University in 1967 but its members are still largely expatriate and all on short-term contracts. This fact may account for comments that the Unit maintains a low profile in policy-making. The HRDU continues to maintain a steady flow of publications on many aspects of housing design, construction, financing, economics and implementation; its body of knowledge and opinion is disseminated by way of staff attendance at conferences and on various inter-ministerial committees. While its future program was still under discussion at the time of writing, one major task to be undertaken by the HRDU in the near future is an evaluation of the site and services program in Kenya, with recommendations expected on its future form.

5.4.8. The brief of the National Housing Corporation remains as described in 4.2. above; its loan terms are also unchanged. It is now subdivided into three branches: administrative, technical and financial, of which the latter has a major sites and services section. It operates under guidelines established by the MHSS: among other matters, on the type of scheme to be constructed, on allocation procedures and terms of repayment.

It was planned that the NHC should be responsible for the construction of over 68,000 housing units in urban areas for

the 1974-78 Development Plan period. But although final returns had not been made at the time of writing, only some 8,600 were reported as completed in the five years 1973-77. (An additional few hundred high cost houses had also been completed in urban areas - most of them in Nairobi - using financing provided by the NHC through the HFCK.) The Corporation shows in its annual report, that it is well aware of the very large gap between plans and outcome. Much of the blame is put on local authorities, directly responsible for the implementation of schemes containing some three-quarters of all units: "With certain local authorities, substantial delay has been experienced not only in the allocation of serviced plots, during which exercise ugly hands of politics, misuse of power, greed and even sheer dishonesty often play leading and impeding roles..." That there were considerable delays in implementation is also attributed to the shortage of suitable serviced land.

Not only is there a gap in absolute numbers of units completed, but also between the price ranges planned and achieved. The brief had been to produce units of a cost not exceeding K£1,200: this, according to the NHC's General Manager, was "never possi e of attainment". 93 per cent of all urban housing was to be in the form of site and service plots. In the event, 37 per cent of all units were in this category. 58 per cent of all houses actually completed exceeded the limit of K£1,200, their mean cost being K£1,500.

Among other problems reported by the Corporation was that of loans in site and service schemes for the purchase of building materials. An upper limit had been set of Shs 7,000 per plot; this was raised in one recent exception in Nairobi to Shs 11,500. Since the limit was established in 1975 and then was calculated as sufficient to "complete a house of 2 rooms if non-permanent materials are used for the time being", it is now not enough for completion of a minimum dwelling, especially if the local authorities insist upon the use of permanent materials.

5.4.9. Local Authorities vary considerably in their administrative capabilities and housing performance. Nairobi, with its greater resources, has always taken the lead in designing and implementing housing projects. Yet in the past few years - with the notable exceptions of the internationally-financed projects outlined in the next section - the Council has succeeded in producing no more than a few hundred housing units annually. The performance of the other two large towns, Mombasa and Kisumu, has been no more impressive, with annual production rates never exceeding 600 units between them, and usually many fewer.

In a bid to improve the housing delivery systems of these three municipalities, new Housing Development Departments (HDD's) have been created within each of them, supposedly to take responsibility for all new low cost housing projects. In practice, however, the HDD of Nairobi is overseeing only the World Bank and EDF projects, and a single NHC scheme; the AID Umoja project has its own project unit nominally answerable to the City Engineers. The remaining NHC schemes are handled
NCC

by a separate group within the City Engineer's Department. Each HDD reports to a Housing Development Committee and consists of three operating divisions (technical, finance and community development) and two support units (administrative and legal).

In the smaller local authorities, responsibility for housing activities varies considerably. Nakuru, for instance, has a Housing and Estate Department which, among other functions, takes the initiative in planning for future housing; the Town Engineer, for implementation. In others, the technical staff is very small, able to deal only with routine tasks. In these latter towns, all new housing development is undertaken by the NHC and other external agencies.

The mortgage market is discussed extensively in Chapter III of this report. Loan terms and policies of the various institutions are broadly similar to one another: depending on circumstances, loans of up to K£25,000 can be obtained, for periods of up to 20 years and at interest rates of 11 per cent per annum (for citizen owner-occupiers) and 12 per cent per annum (for all others).

5.5. THE PRIVATE HOUSING SECTOR

Outside of Nairobi, the volume of approved housing reported as constructed by the private sector is minimal, comprising no more than a few hundred units annually in the other ten municipalities, with most of these in Mombasa. The total reported value of new housing construction in these municipalities was K£4.3 million in 1977. Even acknowledging inadequate reporting, it is clear that the effective demand for high cost private housing is very small outside the three main towns: certainly because of low incomes, possibly also because of the alternatives available in the form of public housing for salaried government employees.

The supply of private housing is strongest in Nairobi, reaching almost 2,000 units annually. (Note that the official statistics under-enumerate these units.) Even in Nairobi, however, supply falls below demand, resulting in rental values that give a return on investment that is probably higher than can be obtained from most investment alternatives. The principal problems constraining growth of formal private housing are reported to be an inadequate supply of serviced land, and the problems and delays occasioned by compliance with the regulations for building approvals. Informal private housing in Nairobi - not meeting the local authority's requirements - probably reaches some 7,000 units constructed annually. This suggests that finance is not a major influence constraining the construction of new houses.

The NCC is taking steps to reduce the first of these constraints by selling parcels of land for private residential development, at market prices, within the World Bank's second project and in the Umoja estate (the latter is outside, and not in conflict with, the HG program). The Council is also extending water and sewerage services - but not access roads - to privately-owned low density residential areas in order to permit and encourage further development there.

The same development constraints do not, of course, apply to informal private housing, the supply of which is steadily growing. Over 15,000 such units will have been constructed annually in the municipalities over the past few years. Their nature has not altered greatly from that described earlier (paragraph 4.3.); it may be that the rates of return from this mode of investment has fallen somewhat, still higher than that on formal housing but broadly in line with the highest rates achievable in other parts of the formal economy.

5.5.1. EMPLOYER AND EMPLOYEE-PROVIDED HOUSING

Despite the requirement of the Employment Act that - with some exceptions - employers should provide their workforce with either accommodation or a housing allowance, many do neither. Very few houses have, in fact, been erected in the larger towns over recent years by any employer outside the public sector.

A recent initiative has, however, been taken by the Union of Kenya Civil Servants in establishing its own Housing Agency for the provision of medium cost houses. Work recently started on the first of the 2,000 units programmed for 1979 and 1980: in Nairobi, Mombasa, Thika, Kisumu and Eldoret. Efforts have been initiated for the Commissioner of Lands to acquire land on behalf of the Union in other towns.

5.6. On-Going Projects

5.6.1. US AGENCY FOR INTERNATIONAL DEVELOPMENT

The AID has committed almost $17 million for three housing projects in Kenya: the Kimathi tenant-purchase scheme in Nairobi, a group of housing schemes in smaller towns implemented under the NHC, and a low cost tenant-purchase scheme in Umoja, Nairobi. Discussions are currently in progress about the form of a fourth project, an extension of the Umoja scheme. The three already undertaken, together with another which did not materialise, have been examined in some depth and are reported upon in the final section of this report.

5.6.2. THE WORLD BANK'S FIRST URBAN PROJECT

The World Bank's first urban project in Kenya was a scheme of 6,000 site and service units, together with the supporting physical and social infrastructure, in Dandora, eastern Nairobi; together with some associated studies to further housing policy and development in Nairobi and Kenya. The project was estimated to cost K£10.54 million ($29.52 million at the time of appraisal), of which $7 million is provided through an IBRD loan and $7 million through an IDA Credit; the remainder is provided through the GOK, mainly by way of the NHC. The loan agreements were signed in 1975; the project was programmed to be completed in 1979, but has encountered some delays which will probably bring the finishing date to 1981 and which will increase the project cost substantially over the original estimate.

By early 1979 almost 1,000 plots had been prepared and allocated, and the allottees of the greater number of these had constructed a minimum dwelling. Occupation of the remaining 5,000 plots will start later in 1979, continuing through 1980.

According to the Appraisal Report,

"the project is expected to generate a wide range of benefits including:improved living conditions for at least 6,000 households, increased output in the small-scale construction industry for self-help building materials and employment for project households through self-help. Furthermore, the project should have substantial redistribution effects by directing NCC's resources into site and services instead of conventional housing units which have ordinarily gone to the middle and upper income groups...

"The rate of return on the housing component of the project, measured in terms of the stream of imputed rents from the expected housing units compared to costs, is about 19%."

There are several innovative aspects of the project: most importantly, in that Dandora is the first large site and service scheme in Kenya, tangibly manifesting the government's committment to this approach as a major contribution towards solving the housing problem. It is the first large project to have a committed financial provision for physical and social components necessary for community development. It is perhaps the first project in which cost recovery principles were systematically examined; and one for which a relatively corruption-proff method of allocation was devised. It was intended to strengthen the NCC's organisational capacity for housing delivery. It also had a built-in monitoring and evaluation study.

The project has generated a good deal of controversy; it appears, however, largely to have reinforced preconceived opinions. Thus one group of observers, gratified by the speed of construction by individual allottees and by their positive appreciation of the scheme, has rated Dandora a success. Others, seeing the squalor that inevitably surrounds a building site, together with plot sizes that are very small for Nairobi (and rank among the smallest site and service plots in the world), plus a fair amount of informal sector activity, maintain that the Council and Government are building yet another slum, barely better than those unplanned settlements around the city and as such unfitting for the capital city of the Republic.

There have, indeed, been successes and failures. Probably the most justifiable criticisms center on the scheme's delays, largely resulting from initial governmental and administrative weaknesses. These partly stemmed from an initial lack of understanding of and committment to the project, and included a reluctance to follow agreed allocation procedures together with disagreements over design standards to be adopted. Some of these delays could be attributed to the narrow political base of the

group involved in project preparation, with a corresponding weak involvement in many decision-makers at an early stage.

Although disagreements about the method of plot allocation - by a random number ballot - were eventually resolved, some observers, witnessing the relatively large size and often high quality of buildings that have been constructed (clearly utilising personal resources over and above the NCC construction loans) have maintained that the allocation process was not impartial. Their argument is that the plots have been occupied - either on allocation or subsequently - by a group for whom the scheme was not intended; and that the rents of the sub-let rooms, at around Shs 200 monthly, are too high for the low income population. The beneficiaries are therefore, it is argued, not the urban poor. The suppositions are not borne out by findings of the Dandora monitoring team: although it is clear that the allocation processes fell short of the ideal, and that many of the present occupants of Dandora are not the original allottees, the beneficiaries are generally within the target population.

Although the scheme had been billed as a "community development project", and the CD Section of the implementing department has broadly been operating successfully and to the benefit of the residents, yet the other planned social and communal facilities have not materialised on schedule. At the time of writing, two years after most of the first phase plots were occupied; only the primary school was operating. This is a problem shared by most other housing projects, but which should not have occurred in Dandora given the safeguards built into the project. Here again, the delays have been occasioned not by technical considerations but by political and administrative indecision.

There are numerous other aspects of this project from which lessons could be drawn (including, for instance, the successes of collection of plot and materials loans; the poor condition of "unadopted" streets; an atrocious record of refuse collection; variable degrees of success in involving other agencies in project management). These are causing a continuing debate on the relevance of this particular solution to urban housing problems. Yet it is true that, in comparison with the almost-exclusively expatriate support for the concept of site and service development a few years ago, there is an increasing number of Kenyans who are convinced of the efficacy of this mode of housing delivery.

5.6.3. THE WORLD BANK'S SECOND WORLD PROJECT

The Bank's second urban project essentially consists of site and service and squatter upgrading schemes in Kenya's three largest towns, Nairobi, Mombasa and Kisumu. The project will cost some K£29 million ($ 60 million at the time of appraisal), of which $25 million will be provided through an IBRD loan and $25 million through an IDA credit; the remainder will be provided by the GOK, mainly through the NHC. Of the total funds, Nairobi is to receive an allocation of K£14.7 million, Mombasa, K£5.5 million, and Kisumu, K£7.7 million; K£ 1 million will go towards technical assistahce for central government, mainly for various consultancy studies.

The loan agreements were signed in mid-1978, with implementation starting shortly thereafter and due to be completed by the end of 1982. The project will be implemented primarily through the three local authorities, under the overall supervision of the MHSS.

According to the Appraisal Report, the project objectives are to:

> "(a) increase the supply of site and service plots to meet a significant portion of demand for such plots over the next four years; (b) introduce upgrading of unserviced squatter settlements as an official policy; (c) demonstrate an effective low-cost delivery system for health, nutrition and family planning services; (d) stimulate and encourage employment and income generating activities for the urban poor; (e) strengthen the institutional capacities of Government and the local municipal authorities for implementing and managing urban development; (f) assist Government in improving the financial resources and management of local authorities; and (g) help local authorities control the pattern of urban growth and to develop their land more effectively...
>
> "When the project is completed the urban poverty group is estimated to be about 650,000 in the three cities. Of this group about 150,000 will receive direct benefits as a result of the project. Of the loan/credit amount of US$ 50 million, 80% is expected to produce/ direct benefits to the urban poverty target groups in terms of goods and services which are both affordable and replicable for this group."

Apart from the benefits and innovations listed in these paragraphs, the project is designed with several experimental features which, if proved successful, could beneficially be incorporated in subsequent shelter projects. Among these are several devices for making plots more readily affordable to households with incomes significantly lower than in the Bank's first Kenyan project. These include a form of progressive (or low-start) mortgage for certain of the poorest families to be resettled from Nairobi's Mathare Valley, by which repayments of plot loans rise over time. Another group from Mathare Valley are to be offered very low cost surveyed plots with minimal services and with no requirement that they construct a house meeting the City's by-laws within a specified period of time: although formally accepted by the Council, this provision is still causing concern to a number of individuals with powers of delay. A third device is a relaxation of minimum income criteria for eligibility for site and service plots by imputing a future additional income to allottees from sub-letting rooms.

A further feature - building on concepts introduced in the Bank's first project and by the Umoja project team outside the HG program - is of servicing several thousand plots to be sold at market prices. In Mombasa and Kisumu the surpluses thus generated will be used to cross-subsidize other options for the urban poor. In Nairobi, the surpluses will be used for the construction of yet more plots for market sale, in order to

build up a housing fund and thus ultimately to reduce the city's reliance on external funds for low cost housing.

Even though considerable efforts had been made during project preparation to avoid the mistakes of the Bank's first project, considerable delays are being experienced with the implementation of most of the components of the present scheme. Exceptions are the technical assistance elements under the MHSS. It could be that the delays in Mombasa and Kisumu are merely teething problems experienced during the formation of the new implementing Housing Development Departments; and it is also fair to point out both that the project is tackling problems that, by their intractable nature, had been left unattended for many years; and that the delays and problems are less severe than are experienced in comparable projects in many other parts of the world. Nevertheless, the problems are predominantly bureaucratic and political, not technical; and, despite the elegant conception of the project and its emphasis on institution-building, they do raise questions as to whether the program is not overly ambitions given the present administrative realities.

5.6.4. THE EUROPEAN DEVELOPMENT FUND

Arising from discussions in July, 1975 between the GOK and an EEC Mission, it was agreed that about K£2 million would be included in the indicative national program over the coming few years for "slum improvement", to be funded under the Lome Convention. Three urban projects were identified, all within Nairobi, formally approved in 1977 and 1978, with a total committed grant of EUA 4 million (equivalent to K£1.96 million at December, 1978):

- Mathare Valley Site and Service Scheme
- Kawangware Improvement Scheme
- Workshop Cluster at Dandora.

The project in Mathare Valley is formulated as an integral and essential part of the Mathare component of the World Bank's second urban project. The principles to be followed are identical to those of the remainder of the scheme. It is estimated to cost EUA 1.375 million (K£674,000), and is administered by the Nairobi City Council with the assistance of a coordinator seconded by the European Economic Community. Implementation is scheduled to take place between January, 1979 and February, 1981.

Kawangware Village, on the eastern outskirts of the city, is in many ways typical of an informal urban settlement, with poor housing - much of it for rental - and unsatisfactory environmental conditions. The Kawangware Improvement Scheme aims to improve living conditions within that village, and to make provision for more rapid and orderly development of the areas around Kawangware, in order to relieve pressures on the village and to preempt the development of similar conditions around it.

The objectives of the scheme are to be met by providing: surface water drainage and access in the village; main roads and drains

in the environs to open up presently inaccessible areas for private low cost housing; a refuse collection vehicle and refuse containers; public toilets at the market; security lights; foul sewers; and water mains, reticulation and public water kiosks. The cost is estimated as EUA 2.41 million (K£ 1,160,000); it was started in January, 1979 and construction of the infrastructure will be completed in April, 1980.

Despite the relatively conventional nature of the components of this scheme, it is experimental for Kenya in attempting to harness and encourage private initiative in shelter provision for the low income population. Whether it is successful in this or if it will only serve to price out the existing population to a less accessible part of the city remains to be determined by an on-going monitoring exercise.

The final element is a pilot Workshop Cluster within the Dandora project site. This arose out of concern at the level of underemployment in Nairobi, hence the inability of a substantial minority of the population to afford even the minimum standards of accommodation provided publicly. It was prompted by observations that although informal manufacturing enterprises are flourishing to an extent greater than in many other African cities, they are nevertheless constrained in particular by a shortage of space, by lack of marketing skills and by a lack of knowledge of techniques for the low-cost production of alternative consumer goods.

The present project aims to create a physical environment whereby these constraints may be minimised, leading to an increase in the income-earning opportunities of the informal sector. Because, however, similar but not identical projects have been unsuccessfully attempted elsewhere in Africa, this particular project is small scale, a pilot project. The cost of the cluster, together with the salary for the manager and other net running costs for the first five years (during which time the scheme is intended to become self-financing) is estimated as EUA 215,000 (K£105,000). The manager should be appointed, and the cluster constructed and operative, in late 1979.

5.6.5. COMMONWEALTH DEVELOPMENT CORPORATION

The CDC is a substantial investor in housing in Kenya. It has loaned money to the HFCK and to the NHC for non-specific projects; together with the World Bank it has also made loans available for the settlement of small-holders on 73,000 ha of land purchased from European owners. Particular housing schemes in which CDC has an interest are all in Nairobi: the Kariokor, Jamhuri and Madaraka housing estates, for rental and for sale; and, more recently, Buru Buru, in the east of the city.

In the Buru Buru development, conceived in the early 1970's after CDC had determined to be involved actively in the housing field, the NCC has been developing 382 rental units with the aid of a CDC loan; and the CDC itself had completed about 2,800 mortgage units by the end of 1978. A further 857 houses are soon to go out to tender. The estate would be completed by about 900 more houses, for which finances have not yet

finally been committed. The houses for sale are of 2-, 3-, and 4-bedrooms (in the current phase of development, however, the 2-bedroomed option has been dropped due to relatively low demand).

Although variously described as "low-cost or "middle-cost" housing, the estate now effectively caters for residents of the city in the upper and upper-middle quintiles. The maximum selling price of houses in the first phase (1973-74) was K£3,000 (requiring a maximum income of around Shs 1,600 per month); since construction and design standards have been maintained, the present phase will be selling for between K£6,400 and K£8,200, (requiring a minimum income of Shs 3,800 per month). There are, nevertheless, still many thousands of applicants for the houses.

Design and administration has been undertaken directly through CDC's Nairobi Office. CDC is not empowered to lend money for social infrastructure, so that the schools, health centers and the like in Buru Buru have been the direct responsibility of the NCC. Because of that organization's internal constraints, the number of such facilities constructed has fallen short of the agreed targets.

Although housing appears as the lowest of the investment priorities in a recent CDC/ODM policy statement, the local office is still pursuing negotiations towards the construction of a several thousand unit, low-cost, housing estate, for which land has already tentatively been identified in eastern Nairobi.

5.6.6. OTHER INTERNATIONAL ORGANISATIONS

Multilateral and bilateral aid has been received for several urban projects which indirectly benefit the shelter sector, as by the provision of water and sewerage to areas previously underserved. The Netherlands Government, apart from earmarking finance for 500 site and service units to be constructed in Eldoret, has shown interest in assisting employment promotion by way of a loan to the NCC for the construction of "hawkers' kiosks" for the sale of cooked and fresh foods. (Completion of these kiosks is presently held up, reportedly for political reasons.)

The same government has also solicited requests for use of its Category IIIc funds for urban or rural application: this would take the form of grants for projects which specifically assist the poorest sections of the community. So far as is known, however, no urban projects in Kenya have yet been formulated under this program.

The World Bank, too, is implementing its policy of assistance to the lower income groups in urban areas by way of employment enhancement. This is provided through a $10 million IDA credit for the Kenya Industrial Estates (KIE), for the reorganisation and strengthening of its support to small industrial enterprises. Resources are to be made available for loans for working capital and equipment, and for the construction of 150 workshops in 10 rural promotion areas, and 40 workshops in Nairobi.

Amongst other potential donors is the East African Development Division of the British Ministry of Overseas Development. This Ministry has stated its willingness to participate in shelter development directly benefitting the urban poor; studies towards a project are probably soon to be initiated.

5.7. HOUSING COOPERATIVE SOCIETIES

Arising out of an initiative in 1975 by the Central Organisation of Trade Unions (COTU), a series of parallel examinations has been conducted of the potential of housing cooperative societies in Kenya, culminating with a report (June, 1978) by the US Foundation for Cooperative Housing. This latter was sponsored by COTU and the Ministry of Cooperative Development (MCD) with the financial assistance of the African American Labor Center.

Despite that past attempts at the organisation of housing cooperatives in the country had generally been unsuccessful, the report's primary recommendation was:

> "the establishment of the National Cooperative Housing Agency as a non-profit yet self-sustaining body, pursuant to an act of Parliament sponsored by the Minister for Cooperative Development. The NCHA will act as the primary advocate and sponsor of housing cooperatives at the national and local levels, and in the urban and rural sectors."

In order to get this agency off the ground, it was recommended that a team of three advisors - a housing cooperative generalist, a cooperative and community development advisor, and a finance and management advisor - should immediately be recruited, probably with the assistance of foreign donors. Furthermore, a task force should be set up to prepare a Cabinet-level discussion paper. It is, indeed, reported that such a paper has been prepared and that the committment of several authoritative persons and bodies is assured. It was, however, the view of the African American Labor Center that until this paper had been approved by Cabinet, no substantive approaches could be made to potential donors of money or of technical assistance.

On the source of funds for the NCHA, an important proposal was "that resources from the /National Social Security Fund/ NSSF be earmarked for low-income cooperative housing programmes for workers and channelled to the Cooperative Bank, the NHC, and other suitable financial institutions". Other sources and channels were discussed, including the possibilities of utilising external funds such as from the AID.

> "The team has informally broached the subject of donor technical assistance with both USAID and UNHHSF. One mechanism which has proven most expeditious and effective in other parts of Africa has been the AID Operational Program Grant. By this route AID can make grants to approved voluntary agencies for projects which are considered within AID's priorities."

The one recommendation from the NCHA which is causing some doubts is on the organisation of the board of directors: proposed as

wholly government and para-governmental representation, with the sole exception of COTU. It may well be that a more entrepreneurial and dynamic approach would be achieved with the inclusion of representatives of the private sector, at least one of whom is reported to have stated his organisation's willingness to participate actively on the board.

5.8. Strengths and Weaknesses of the Present Situation

Given the relatively limited volume of public resources that can be made available for housing, together with the amount and distribution of private resources, the realisation has grown of the impossibility of achieving, within a foreseeable time period, the stated aim of housing the urban population in "decent" dwellings as these are officially defined. The Government's plans are therefore tempered to aim over the short and medium term at assisting those groups that are least able to provide their own accommodation, and by an acceptance that - given a choice - it is preferable to go for quantity rather than quality of housing units. Nevertheless, the performance has not been meeting even the modified objectives with regard either to the number of units constructed or to unit costs. It is, indeed, a matter for wonder that plans have been put forward which are known to be incapable of realisation.

That there are these difficulties is far from exclusively a result of Kenya being a poor and rapidly urbanising country: many constraints exist which, with sufficient committment and foresighted planning could be obviated, if not entirely removed. The most serious of these constraints are of finance and skills, together with the availability of serviced land.

Financial constraints are discussed fully in Chapter III of this report.

Skill constraints are twofold. The first is the restricted organisational capacity of central and local government to handle a public program that is both considerably larger than before and different in scope. Such weaknesses have been apparent in the implementation of several of the larger recent projects. The recent introduction of Departments of the Nairobi, Mombasa and Kisumu municipalities specifically to supervise the implementation of low cost housing projects, together with a proposed reorganisation of the NHC and the MLG, should improve the situation. The longer experience of Nairobi, however, suggests that the implications of the establishment of the new department have still neither been fully considered nor completely accepted.

The second of the skill constraints relates to the availability of the technical and managerial expertise required by central and local government agencies responsible for shelter. It has been found, for instance, that project implementors are often unaware of agreed procedures and, through inexperience, are unable to anticipate many bottlenecks in the implementation process. Although certain training programs now under discussion should help to alleviate this problem, the required skills and experience are in short supply, and Kenya must continue to use foreign expertise in certain situations.

Although it has not been possible to quantify the extent of the problem, it is apparent that there are shortages of land suitable for low cost housing. The land is either in private ownership, and lack of funds or of committment prevents its acquisition for public use; or procedures are so cumbersome and apparently unfair to people with rights over that land that acquisition can stretch over unconscionably long periods of time; or, even when land is available in the right place and at the right time, it is often the case that infrastructural services are not present and cannot readily be constructed. It is noted that the funds available for land acquisition cannot, in general, be augmented by international donor agencies, whose broad policy it is not to advance money for land purchase. It is also noted that, in part due to political constraints, there is no forward planning for land acquisition. There are additional problems in that land once allocated for development cannot easily be repossessed or reallocated if no development ensues.

Given these and other constraints - and, as reported in the following section of this chapter, there are current proposals to remedy several of them - the government's response has been to take as a priority target the urban poor. For, as noted in the next chapter, the bulk of the rural population has, until recently, been able adequately to provide its own shelter; and the middle and upper income groups of the urban population were assumed, by and large, either to have accommodation provided by employers or to be capable of housing themselves from their own resources. A restricted amount of public funds, too, would be able to provide a greater number of low cost than of higher priced units. The main strategies to accommodate the urban poor have been through site and service development and, latterly, by the upgrading of substandard settlements.

Despite this emphasis, only 41 per cent of the programmed public and private expenditure on housing in the Third Development Plan period was on urban low cost housing. A tiny amount - under 2 per cent - was allocated specifically for rural housing. By far the greater amount of the remaining 57 per cent was destined for high cost housing, mainly through private and government/ institutional schemes.

In the event, the NHC probably spent less than half of the amount budgeted for it on urban housing. (The final returns for the Development Plan period have not yet been made.) Between 1973 and 1977, only 13 per cent of the NHC's completed urban units were in the form of site and service plots. The total number of housing units produced under public auspices was probably of the order of 13,000 over the five years 1973-77.

Records of private formal construction are poor: a very rough guess at the number of completions over the same period is of 12,000 units. Together, then, the public and private sectors completed about 5,000 urban housing units annually, compared to the increase in the number of households of 22,000 annually. In a statistical sense, then there has been a gap between formal supply and needs of some 17,000 units annually. Although there were probably increases in room densities throughout urban Kenya yet, since there were very few people homeless in the

sense of sleeping on the streets, the greater part of this deficit was made up by the construction of illegal and generally but not invariably substandard houses. This construction, it should be noted, represents a considerable (but unquantified) volume of investment of individuals' money, time and entrepreneurial abilities. Presently uncoordinated as this investment is, much is wasted or misdirected; with appropriate assistance, it could well be that it could be put to better use.

Many reasons have been given for the shortfall between plans and actualities, reasons which are difficult of generalisation and which, in most cases, are genuine. A relatively sophisticated housing system has been developed in Kenya, requiring actions and approvals at many stages of planning and development by many different people and agencies. The system can only work smoothly and efficiently with comprehensive integration of all these separate processes. This integration has not been achieved, and in part because of a lack of knowledge or understanding of the ways in which the bureaucracies work. If this analysis is correct, the introduction of further controls and increased complexity is more likely to cause a deterioration in the housing delivery systems than to improve them.

The present strategies for helping urban households have, through conventional financing requirements, led to the exclusion or to the positive disbenefit of those in the lowest income groups, namely those below the 20th percentile in the urban household income distribution curve. This group, largely by virtue of having a low income, or of being unable to document a sufficient income for eligibility of public housing schemes, not only do not benefit from the multitude of subsidies available to those in the slightly higher income groups, but are obliged to pay high rents in substandard accommodation.

Given the paucity of data, it is difficult also to document that there has been a shortfall in the production of houses for the middle income group. Few of these are occupying illegal structures: the problem is solved partly by sub-letting and high occupancy rates, partly by occupying houses intended for the lower income groups.

Despite the considerable site and service programs now under construction or in the planning stage, broad acceptance of the principles of this style of development has not been achieved. This is evidenced by an equivocal reference (in a report to the 1978 UNHHSF Nairobi conference) as merely "one strategy that has made some impact". The study recently started by the HRDU may suggest how the present approach to site and service development may be altered, modified and presented in a more acceptable manner. It is noted, too, that upgrading is now a part of the official strategy: one which, if handled sensitively, can make a major impact on housing conditions of the poor.

One final problem that merits notice - albeit more in its potential than its realisation - is of coordination between housing projects, their conception having been made by many separate agencies, local, national and international. Each of these agencies has had its own requirements which should be

reconciled with national policies and programs. This reconciliation is not always ideal. There are, for instance, cases in which the authority of the MHSS has been sought for a scheme already under construction. The MHSS claims to be unaware of the progress of other projects.

Pricing, allocation and repayment terms and procedures differ from one scheme to the next, separated often only by a few hundred yards or by a few months. It would probably not be helpful to document these inconsistencies, many of which are relatively trivial (different charges for application forms for different schemes, for instance), some of which are, for Kenya, inevitable (different on-lending charges for funds from external sources) and some of which can be justified as experimental (such as the treatment of plots for sale). Yet, in the end, these differences do cause anomalies which may later become difficult of resolution; they inequitably favor some populations over others; and may well not result in an optimum allocation of resources, public or private.

The reasons for these differences are mainly bureaucratic and personal: as witnessed by the preceding section of this chapter, the process of housing is undertaken more through a series of projects than through a comprehensive program. And these projects are often the brainchild each of a relatively small group of people, generally outside the MHSS, and with their own theories to test. The NCC, for instance, has historically seen itself as largely independent from other central government agencies; it has, in fact, often been possessed of superior resources to these other bodies. Within the NCC, too, power disputes have resulted in compartmentalisation of projects within groups that barely communicate with one another. And the MHSS has been unwilling or unable to take a lead to resolve the many anomalies that do result.

In conclusion, however, it must be noted that however messy this approach may appear, it has probably generally resulted in the speedier implementation of projects than if the whole had been subjected to centralised bureaucratic controls.

6. The Next Five Years

6.1. THE 1979 - 83 DEVELOPMENT PLAN

The Housing chapter of the 4th Development Plan is more succinct than in previous Plan reports, omitting in particular an analysis of the performance of the past five years. It gives a concise statement of housing needs and demand, of present policies, of the studies proposed and of the government housing program for the fiscal years 1979/80 to 1983/84. It is intended that the chapter in the Plan report later be amplified by the production of a comprehensive policy and program document of the Housing Department of the ministry.

The analysis of requirements states that the present housing shortfall in urban areas is of 140,000 units; the annual need, for new urban households, is of 30,000 units.* A contrast is drawn between the minimum cost of a conventionally-constructed

---

* This figure, an average for the period 1979-83, compares with an average of 22,000 units required annually over the previous five years, implying a growth rate of new household formation of 6.4% p.a.

unit and incomes: it is estimated that only 30 per cent of urban households could afford the necessary monthly repayments of Shs 570/- for such a housing unit.

The stated policies are similar to those contained in the previous Development Plan, with the emphasis retained that the public program will concentrate on those urban households in the lowest income groups. There is an implicit admission that certain policies need further development and refinement, by recurring statements of studies, some of which have already been initiated, others still being under discussion. These include studies of building by-laws, on the organisation of the NHC, on rental policies (on which it is stated that, rather than relying on formal methods of control, a more effective way of reducing rents is by increasing the housing stock), on the availability of land for urban housing; on pool housing for government servants, in conjunction with the Office of the President (although ownership of dwellings will be encouraged, it is stated that those employees in the lower income brackets will still be expected to rent their housing); on manpower requirements; on local building materials and techniques; an evaluation of the effectiveness of external aid; and more extensive monitoring and evaluation of projects. In addition to these policy studies, a consultancy study will be initiated by the MHSS to determine the form of the World Bank's Third Urban Project in Kenya, complementing parallel studies by the AID and other agencies.

Despite the emphasis of growing needs in the urban areas, the budgetary allocation is rather lower in real terms than for the previous five years, although exceeding actual public expenditures over that period. A total of K£132 million is planned to be spent over the next five years; of this K£53 million is budgeted to the MHSS, K£13 million to other ministries and governmental institutions, K£7.5 million to local authorities from their own resources and from foreign aid, and the remaining K£59 million from private enterprise. This total, it was estimated, will construct nearly 75,000 housing units, about half of the need for new urban households alone. Of these, some 21,000 would be constructed through the NHC's urban housing program, 26,000 through the World Bank's Second Urban Project, 12,000 through the private sector, and the other 16,000 through various other programs, urban and rural. (Housing in externally funded projects which had not been firmly identified at the time of preparation of the Plan is excluded from these totals.)

The average cost per unit implied by this program is K£1,800 (K£4,800 for the private sector, which is probably optimistic; K£650 for those units in the Second Urban Project and K£1600 for all other public sector units, with K£1,200 for the composite public sector). 37 per cent of all the units will be in the form of serviced plots; 24 per cent rental units; 13 per cent provided through upgrading substandard settlements; and 25 per cent will be mortgage units or in tenant-purchase schemes. It is not clear how these percentages are arrived at.

The Development Plan report gives the location of new units to be built by the NHC and under the Second Urban Project; this tabulation was, however, described as being only indicative and subject to later revision. As drawn up, 47 per cent of all

these units are planned for Nairobi; all of these are in schemes already under construction or otherwise committed. Indeed, the amount of flexibility permitted is very small: the budgetary allocation would permit less than 10,000 new units in schemes which are not presently committed. Being based, then, on previous committments, the proposals do not necessarily accurately reflect either needs or locational policies. It must be hoped that the revised formulation of the program will take these into account.

The chapter on cooperatives does indicate a positive committment to the principle of the development of cooperative housing, referring to the creation of a national housing cooperative authority, to the use of NSSF funds and to the involvement of COTU. It does not, however, spell out the steps which are to be taken in order that these aspirations may be fulfilled. A relatively small total of some 5,000 units over the plan period is envisaged under this program.

6.2. LOCATIONAL POLICIES

The government is reportedly considering the recommendations of a study undertaken by a World Bank team in 1977-78 on an urban development strategy for Kenya: although many of the detailed recommendations may not be implemented, its broad thrust appears to be acceptable. The aim of the study was to recommend a strategy in conformity with the main policy objectives of the 4th Development Plan, meeting basic needs and improving the national income distribution, hence implying emphasis on rural development.

Among other recommendations is that there should be greater selectivity in applying the growth centres stretegy: that Kisumu should be developed as a major center, with Eldoret as a secondary regional center. The policy on the location of industries should be strengthened, possibly by use of a labor subsidy. Local fiscal resources should be mobilised. A coherent land policy should be formulated, and a Land Development Corporation established. Inter-ministerial relationships should be strengthened; and, to facilitate implementation of the strategy, consideration should be given to setting up a Growth Centre Development Authority. One of several specific recommendations on housing is that:

> "Foreign donors should be approached to finance infrastructure projects consistent with the recommended spatial strategy, especially for:
>
> (i) water supply projects in the major towns of Western Kenya; and
>
> (ii) housing projects in Kisumu."

6.3. URBAN SHELTER STUDIES

The World Bank is part-financing a study intended to define a <u>third urban project</u> for Kenya, a continuation of the Second Project on a nationwide basis. The focus would be on the smaller towns in the country. The study is due to be undertaken by consultants thru 1979 and early 1980: the

most optimistic timetable would allow implementation to commence in 1981, with a probable project life of five years. No GOK funds, however, have been set aside for the implementation of any resultant project within the current Development Plan period. The study will focus specifically on the determination of an investment program and project design: "the specification of a detailed program of public sector investment targets for private activities in housing, generation of income enhancing opportunities, etc, as well as comprehensive plans for cost recovery and subsidies".

As noted elsewhere, other wholly externally-funded studies are planned or in progress to determine the nature of specific urban shelter projects. The farthest advanced of these is that of the AID's Umoja II project, adjacent to the present Umoja site in Nairobi. This is expected to be predominantly of housing and related services, offering a wide range of development options to benefit a generally lower-income target group than in the first scheme.

With the realisation that the NHC has also been "unable to utilise all the funds allocated in the past/and/ has generally failed in the task of providing housing for the poorer groups", a study is also to be undertaken to review the performance of the Corporation and to make recommendations as to how it may be improved to meet the government's objectives.

A further major study being undertaken as part of the Bank's Second Urban Project is "a study to review the legislation concerned with low-cost housing and to make recommendations for the development of model housing by-laws and building codes appropriate thereto". The study will cover a period of 14 months from mid-1979 by a consultancy firm recently appointed. At the conclusion of the study, the consultant may be retained for a further period "to assist the responsible Government Agencies in preparing a programme of action to implement the findings and recommendations of the Report, and draft any amending legislation that may be necessary to give effect to those recommendations which are accepted".

6.4. PROGRAM AND POLICY GAPS, AND PROPOSALS FOR ACTION

That there are a number of gaps in the present policy framework has been recognized through MHSS' statements of intent to conduct a number of studies over the coming few years (paragraph 6.1.). The present team also recognises and emphasises the need for all of these studies, and trusts that their inclusion in the 4th Development Plan implies total governmental support for them, since few of the issues can be fully and exclusively tackled by the MHSS alone.

Nevertheless, extensive as the ministry's list of policy studies may be, it is not totally comprehensive. It is, however, acknowledged that the ministry's resources are unlikely to permit an early evaluation of all the issues that have been touched upon in this chapter. These include, among others, the impact of zoning controls; improved data collection; uniformity of cost recovery principles; the effects of subsidies; eligibility criteria for public housing; policies on sub-letting; delivery

systems for the poorest sections of the community and for middle-income employees; locational policies; infrastructure standards; the share of public finances devoted to housing for government employees and the public at large. Covered by these summary headings are both matters of inconsistency in policy and areas in which performance may be improved. Whether or not these important subjects may be the subject of investigation in the near future should be a matter for the early attention of the MHSS.

A completion of the review of the policies listed above and in the 4th Development Plan would provide a framework for stimulation and control over the urban housing delivery system that is more comprehensive than at present. The undertaking of such a review does not, however, necessarily ensure uniformity and consistency of principles: the very extent of the list suggests that it would, at best, be difficult for all to be undertaken within the MHSS and the HRDU even if these bodies were at full establishment. Some of the larger studies are being contracted to private consultants, but even doing this requires a substantial input of coordination and supervision.

The problems of coordination and integration of the various parts of this policy review is compounded by the absence of a definitive statement of the principles behind these policies. There are two principal official publications which do no more than point in this direction: the 1976 national report to the UN Conference on Human Mettlements (the Vancouver Habitat Conference) and the series of reports on the Development Plans. Both contain a statement of the government's long-term aims, and a loose statement of short-term objectives; but the links between these two and the strategies proposed are unclear. Thus - at least in the published documents - the various target groups are not defined other than by singling out the urban poor; this has the indirect result that some groups - perhaps intentionally, perhaps unwittingly - receive a far smaller share of national shelter resources than do others. The degree of control by the various agencies over different processes of housing delivery, too, is imprecisely clarified, resulting in the assumption by some groups of the same responsibilities, or of the abrogation of other responsibilities by all parties. The whole system of control instruments has proved to be insufficiently elastic to enable ready implementation of published programs; a synoptic reappraisal of the nature of these instruments could result in speedier implementation.

It is recommended, therefore, that the MHSS initiate an overview statement of principles and philosophies before sttempting to detail many of the individual policies that will make up the whole. This need not be a time-consuming exercise, for there is already a broad - although not universal - concensus about the nature of the philosophy. Although the MHSS should naturally take a leading role in this activity, it should not be exclusively an in-house operation; for to implement the policies a wide appreciation of their intent is essential, among all levels of both public and private agencies concerned with housing. To this end, continuing consultations and perhaps occasional seminars (such as that held before the Vancouver Conference) are desirable.

It is not for the present report to anticipate the findings of the individual studies which are being undertaken by and for the MHSS. A reiteration of the recommendations implicit in the preceding pages of this chapter would be open both to this criticism and to one of unevenness and perhaps of superficiality, since an analysis of this length inevitably cannot do full justice to the subject of urban housing. It is, nevertheless, appropriate to identify some of the conclusions from this ayalysis which reflect on the activities of foreign donors and agencies in the shelter field.

The present published program of public urban housing already requires an annual output over the next five years some four times as large as that achieved over the previous five years although, having a substantial upgrading component, being somewhat different in scope. To the programs already published could be added another ten thousand or more units to be constructed over the next few years, dependent upon successful completion of negotiations for an extension of the AID, World Bank, ODM, and CDC programs, in Kenya. Given the degree of success in meeting past plan targets, it must be doubted whether a straightforward injection of yet more capital for house construction by the existing agencies within the present plan period could be accommodated.

Where financial assistance by foreign donors is permitted, support for land purchase and preparation - such as by the installation of physical and social infrastructure - should be considered a priority presently higher than for direct house construction. Construction by other agencies (the NHC and local authorities, cooperatives, and particularly private builders of houses in all cost categories) may thus better be encouraged. And if it is true, as reported but not recorded, that donors have been reluctant to invest in projects with little physical manifestation of their own contribution to the country's development and particularly where some other agency is responsible for house construction - then it should be recognized that such reluctance amounts to an abrogation of those agencies' own mandates.

If needs and capabilities are identified for direct assistance, whether in the servicing of land or in the construction of part - or fully-completed units, priority should be given to those two towns in Western Kenya - Kisumu and Eldoret - which have been identified as having priority for national investment. (It is recognized that if a town is to be developed, investment and in-migration will normally be led by industrial and other employment facilities. This is, indeed, forseen for Kisumu and Eldoret. Nevertheless. employment and housing are complementary; and since the price and quality of housing also affect people's decisions where to live, then it is argued, improved housing should also be provided particularly in key development centers. It is also true that housing development itself creates employment, to the tune of several hundred man years for every K£1 million invested. House construction in any town will therefore have a favorable employment impact on the overall development strategy.) It may well be that Kisumu's needs are greatest for new low-cost housing (where the present program is not reaching the poorest 30 per cent or so of the population; and in which town

there is a below-average stock of public houses per capita); and settlement improvement schemes in Eldoret (which are reported as being urgently required).

Anticipating that no major increase of central government financial support for urban shelter is likely and that it would be unwise to expect external funds, to match the growth in urban needs, then where assistance is to be given, it should encourage and stress self-reliance, both by individuals and by housing agencies. This philosophy implies continued support for the self-help and upgrading approaches to housing provision, however they may be modified as a result of the current HRDU study. It implies assistance to the development of housing cooperatives: dependent on the outcome of any statements by the MCD, this would probably take the form of technical assistance to help establish a national housing cooperative agency. It implies giving or lending money for projects which are replicable; and for projects which should generate surplusses for reinvestment in shelter or for direct subsidies to the few who need them. It implies also giving institutional support to the smaller local governments, that they may more effectively participate in the processes of project conception, initiation, design, construction and management. Given the volume of work still outstanding for various aspects of policy formulation, it is improbable that the MHSS and HRDU will be able to undertake all the required studies within a reasonable time span, say three or four years. It is therefore suggested that the Ministry should urgently determine which of these studies it will be able to conduct in-house and that technical assistance be offered for completion of the others.

7.0. The AID Experience

7.1. OVERVIEW

In describing the USAID experience in Kenya each of the four projects - of which one did not materialise as an HG Project - are treated first individually and in sequence of time of implementation. The emphasis will be on program definition, project identification and implementation and follow the general format as set out below:

Objectives
Reasons for the Project
Description of the Project
Costs and Financing Terms
Target Population and Selection Methods
Institutional Arrangements
Problems Encountered
Present State of Project
Achievement of Objectives

In using this approach we are aware of the danger of seeing each of these projects in isolation, or at best only in relation to each other, and not to the other major housing projects going on at the same time and, indeed, in relation to the general development in the housing sector. Apart from references from time to time to simultaneous development in this field a sub-section has been added which in more concrete ways attempts to put the four projects into perspective and to point out some significant influences on policy and procedures which are still discernible from these and other major projects. A comparison with such other projects will be implicit in this part of the analysis.

The main purpose of this part of the study is to point to the future and we have therefore ventured to recommend, in some cases, very specific improvements at both the conceptional and procedural levels. We have not seen it as our task to identify specific new projects but attention is drawn to possible locations and types of projects which will be in line with the housing policy, the development plan and the findings of the present study.

7.2. KIMATHI ESTATE: 001

7.2.1. Objectives

The goal in this housing development (as in all of the Kenyan projects) was to encourage the Government of Kenya to implement its policy emphasizing various shelter solutions for lower income families.

In addition, this development was to act as a "pilot demonstration" of a homeownership program for the Nairobi City Council. The Nairobi City Council had begun financing housing in 1929 but had only just commenced to construct tenant purchase housing instead of merely rental units. The City Council noted in a report to AID that Kimathi Estate represented its

first attempt to locate owner-occupied housing in an area previously devoted exclusively to rental housing. Since the City Council was also acting as the "administrator" for these units, it set up a special "mortgage service department" as a direct consequence of the project. Finally, the legal documents that were drawn up for Kimathi served as the model for all future tenant purchase schemes.

7.2.2. Reasons for the Project

The Kimathi Estate project was the result of a number of different housing efforts undertaken shortly after Kenya achieved her independence. In late 1964 a United Nations team led by Charles Abrams visited Kenya and conducted an extensive survey of housing, finance institutions, foreign aid programs and related matters of urban planning. The UN team noted that housing goals could only be met at that time through the assistance of the foreign capital market. The AID Housing Guaranty Program was one of the avenues specifically recommended.

The exact Kimathi project was the result of negotiations between AID and the Nairobi City Treasurer's Office. The City Council's application was accepted by AID. Kimathi Estate was the first Housing Guaranty project in Africa that was not sponsored by a private entrepreneur. Special recognition was taken of Nairobi City Council's experience in developing and managing housing estates.

Preliminary development work continued from 1966 to 1969. During this period the largely expatriate staff at the City Treasurer's Office was replaced with Kenyans. By 1969 local expertise had been gained, and the Government of Kenya had determined that this was to be a housing scheme for "middle income families". This characterization was in keeping with the type of housing generally being built under the Housing Guaranty Program in the 1960's. A U.S. insurance company became the investor in the project, and a series of staged real estate closings took place from the spring of 1969 to the spring of 1972.

7.2.3. Physical Construction and Design

The Kimathi Estate development is located at a site approximately 4 miles from the center of Nairobi. It is in the eastern sector in a relatively populated rental housing area. A two lane asphalt paved street provides access to the site, and public bus service links the estate with downtown Nairobi. Utility services are all provided.

The project consists of 87 four-room (2 b.r.) units and 256 five room (3 b.r.) units. The houses were constructed of 9" solid concrete block over a concrete foundation. There is a pitched roof of concrete tiles supported by timber rafters. There are metal casement windows, and a stainless steel sink in the kitchen. The bathroom contains a shower, water closet, wash basin and a hot water tank which also supplies the kitchen.

In Kimathi Estate the individual lot sizes average 2,240 square feet (70' x 32') for the larger units and 1,750 square feet

(70' x 25') for the 2 bedroom units. Each dwelling unit has vehicular access, porch, fair sized living/dining areas, closets in bedroom, kitchen and linen closet. The fore-court measures 25 feet although with some smaller at 20 feet, and rear court of 25 to 30 feet.

7.2.4. Financing Terms and Costs

The actual amount borrowed for this project was US$ 1,993,073 by the Nairobi City Council. The investor was the Life and Casualty Insurance Company of Tennessee. The money was loaned to tenant purchasers at a composite rate of 8½% for a maximum period of 20 years. The composite rate was made up of the following elements: 7.25% to the investor, 0.50% AID Guaranty fee, and 0.75% Administration Fee payable to the Nairobi City Council.

The Nairobi City Council required at least a 5% down payment from the tenant purchasers (note that the documents called for a 10% downpayment, but the City Council accepted 5% and financed the remaining 5% out of its own resources).

The amount of the loans to the tenant purchasers was determined as follows:

Type	Sales Price	Less 5% Downpayment	Loan Amount
3 bedroom	KShs 46,000	KShs 2,300	KShs 43,700
2 bedroom	KShs 41,500	KShs 2,075	KShs 39,425

The monthly installments under the tenant purchase agreements are as follows:

Type	10 Yr. Term	15 Yr. Term	20 Yr. Term
3 bedroom	KShs 555	KShs 439	KShs 385
2 bedroom		KShs 396	KShs 348

A significant number of homes were sold under the 10 and 15 year term mortgages. A few allottees even totally prepaid their mortgages at the outset or at least made substantial payments on them.

It is of interest to note that the administration fee to the Nairobi City Council was as follows: 10 year term: KShs 49 per month; 15 year term: KShs 39 per month; and 20 year term: KShs 34 per month.

Prepayment is advantageous because NCC earns interest on these amounts even if it looses its administrative fee.

Other costs to the allottees have been estimated as follows:

Closing Costs:	KShs
Legal fees for preparation & recording of documents:	200
Stamp Duties:	150
Fire and Casualty Insurance (per month):	5
	355

Application Fee: (150 to HFCK & 50 NCC)	200
Municipal Services : (1973 prices)	
Water (per 1,000 Gal.)	6.50
Sewerage (per 1,000 gal. of water)	3.50
Garbage collection (per month)	4.50

7.2.5. Target Population and Selection Methods

The loan documents specified that applications while collected by the City Council were to be processed by the Housing Finance Company of Kenya, Ltd. Indeed, 3/4 of the application fee (KShs 150) was retained by HFCK for performing this service. The HFCK analyzed the applications for "credit worthiness" and passed on their recommendations to the City Council. From this approach it is clear that Kimathi Estate was considered a "middle income" development, and the main selection criterion appears to have been the ability to repay the loan involved. The loan documents specified that prior to Council's commencing construction on any house, such "house shall have been sold to a purchaser recommended by the Housing Finance Company of Kenya, Ltd.". (Administration and Borrowers Agreement, Sec. 3.01 F).

A copy of the sales brochure used for the Kimathi Estate lays down some eligibility criteria:

" 1. To participate in this scheme applicants must satisfy Council that their annual income is sufficient to meet all the consequential expenses.

2. Each application from an employed person must be accompanied by a letter from the employer stating position held, length of service, annual income and that he is prepared to deduct monthly repayments from your salary and transmit them to the City Council.

3. Self-employed persons will be required to furnish accounts, income tax returns or such other evidence as may be considered necessary.

4. This is a Tenant Purchase Scheme and is intended solely for owner occupation.

5. Applications will be accepted in Room 407, City Hall as from January 10, 1970."

Some indication of the public response as well as the actual procedure followed can be gained from an evaluation report made shortly after the project opened by a representative from the US National League of Insured Savings Association. He reported, inter alia, that "353 new applications were received and sent over to Housing Finance Corporation of Kenya for scrutinizing and recommendation. As HFCK alleged that it would require at least 9 months to complete the new credit review, NCC resolved at a special meeting held January 25, 1972, to have the

353 applications scrutinized by an NCC special credit review committee, whose recommendations were finally approved by the City Council".

The approved lease form for the Kimathi scheme had this provision:

General Information.

(c) "Do you understand that you will be required to live in the premises and that the written consent of the City Council must be obtained for any sub-letting?"

The team has found that the extent of sub-letting without approval of Council is on the order of 50% at present. However, in this, as in other NCC schemes, no enforcement takes place. On the other hand, it appears that present occupants - whether tenants or owner-occupants are all from the middle income group. Records no longer exist showing the number of applications filed, but judging from the quotation above, 10 times more applications could well have been filed than there were units.

7.2.6. Institutional Arrangements

It has already been noted that a number of organisations were involved in the Kimathi Estate development. The UN housing mission to Kenya in the early 1960's focused attention on the problem of housing. The Nairobi City Treasurer's Office was also active during this period to solicit foreign assistance to finance Council housing. Finally, AID was very responsive to the problem. The active promotion of this project by AID personnel in Kenya helped to expand the Housing Guaranty Program in worldwide scope. Kimathi Estate was one of the first Housing Guaranty developments outside of Latin America.

The internal project arrangement was also innovative in a number of respects. As originally conceived, the Housing Guaranty program was to be a "pilot demonstration" program for Latin America that would transfer US technological and managerial skills, stimulate private home ownership and encourage free enterprise while helping to alleviate the housing shortage. During this early period loans were only made to private developers (very often American contracting firms or joint ventures involving American and Latin American firms). In Nairobi an entirely new pattern of relationships was set up.

The Nairobi City Council was selected to be the primary actor with a number of distinctly separate activities. The Housing Guaranty program in the 1960's involved the following roles:

1. Borrower: the legal entity which received the loan from the Investor (see below) and had the obligation to repay it. Under the usual procedure in the mid-1960's the "borrower" was a special corporation set up by the private builder/developer. The "real borrowers" were the homeowners (tenant purchasers in Nairobi) who had the

obligation to repay the loan through the Administrator (see below). Nairobi City Council was the borrower for Kimathi Estate: one of the first public institutions to act in this capacity.

2. Administration: the organisation which received the loan payments made by the tenant purchasers and remitted them to the US "fiscal agent" (see below). The administrator also serviced the loans, noted delinquencies and took foreclosure action if necessary. In the Kimathi Estate project the Nairobi City Council was appointed as administrator with a proviso that upon a breach of contract AID was empowered to make "alternate administration arrangements". (Administration & Borrower's Agreement, Sec.5.08.)

3. Sponsor: the initiating organisation; in the mid 1960's this was often a US or host country builder. The Nairobi City Council was one of the first public agencies to combine all three roles. In the last decade this practice of combining the three roles has become common, but the Council and the Kimathi Estate project were innovators.

4. Eligible Investor: the organisation which makes the loan (or investment in the foreign shelter project) which is subject to the US Government Guaranty. To be eligible, the entity must be created under the laws of the US or owned by such an entity. In Kimathi Estate the eligible investor is the Life and Casualty Insurance Company of Tennessee.

5. Builder: for Kimathi Estate the builder was a private Nairobi company selected by the City Council through its normal public bid procedures.

6. Construction Financing: the Nairobi City Council provided construction financing from its General Fund.

7. Host Country Guaranty: An agreement between the Government of Kenya and the United States whereby the GOK guarantees to repay in full in US Dollars the amount of the investments outstanding, notwithstanding homeowner defaults, devaluation, inconvertability, etc.

7. Contracts of Guaranty: AID's committment to the investor to provide the "full faith and credit" guaranty of the US Government insuring the return of 100% of the outstanding balance of the loan plus accrued interest if for any reason the foreign sponsor-borrower-administrator defaulted on its loan.

7.2.7. Problems Encountered

In late 1972, the National League of Insured Savings Association, Washington, D.C. made a Financial and Management Review of the Kimathi project. This report was published in May, 1973. In the "Conclusions" section of the report, 25 separate technical violations of the loan closing documents were identified as committed by the Nairobi City Council. This finding led him to a "Qualified Opinion" as follows (in part):

"As shown in the present report, a significant number of exceptions were disclosed during the examination. In the opinion of the examiners, many of such exceptions seem to be a consequence of the related City Council's key officers and operation employees not being sufficiently acquainted with the project agreements in order to enable the City Council to implement them adequately." (p.8) The bulk of the failures were in the accounting procedures adopted by the City Council:

"At the same time the Administration Agreement was negotiated and signed, the City Council's negotiators apparently did not give proper consideration to the implication of its inability to keep its records in such form and manner as will disclose at all times the application of payments received on the tenant purchase agreements....

The City Council's present accounting system set up does not provide its management with the information required to prepare the Administrator's Monthly Financial Reports."

Review of the more recent AID files reveals that minor accounting discrepancies have continued to plague the project. A great deal of administrative time seems to have been devoted to reconcile amounts of under US$ 100.

Nevertheless, the examiner did report the following: "The examiners were favourably impressed with the outlook appearance of the Project houses. Streets and sidewalks were clean and well maintained. The general impression obtained by the examiners is that the tenant-purchasers are quite satisfied with their homes." (p.7)

AID communicated the findings of this evaluation in a letter to the Town Clerk, and in early 1975 he replied noting correction of most of the technical deficiencies. The Town Clerk stated his impression of the project in this letter: "All in all the estate is in satisfactory condition".

7.2.8. Present State of Kimathi

A field inspection of Kimathi Estate was made by members of the present team in order to assess the changes that have taken place since its completion and the present state of the residential environment. The first observation is that the Estate has "matured" in that it has developed a character of its own through being lived in, through the growth of trees, hedges, lawns, flowers, maize, sweet potatoes and other assorted food-crops that one normally finds in residential estates. Other visible signs of a prosperous and viable middle class community are the large number of TV aerials, telephone connections and cars in the front yards.

The high standard of landscaping is complemented by the equally creditable level of infrastructure standards, including paved streets, underground services, nursery and primary schools, health centre, shops and public open spaces. In fact this is in itself a problem, in that the higher the standard of infrastructure, the greater the demand for maintenance services and the

bigger the strain on municipal recurrent budgets. This situation is reflected at Kimathi, where underground stormwater drains are blocked, garbage is not collected for weeks on end, and grass on the verges and open spaces is seldom cut. The road surfaces however, are in very good condition, having been well built in the first place.

The houses have weathered well, and they are generally in good condition. Maintenance is an individual responsibility except for common services installations.

7.2.9. Achievement of Objectives

To the extent that this housing development was constructed within the budget, occupied expeditiously and the loan default ratio has remained exceedingly low (the last report showed arrears of less than 5% of total loan balance), economic development and social progress have definitely been achieved. To City Council the experience of Kimathi Estate provided a useful addition to the City's housing stock and tax base, as well as to a set of procedures and legal devices that could be used in similar projects in the future. Experience in dealing with the USAID and with the US capital market was gained. From the public relations point of view Kimathi enhanced the public image of both AID and City Council. As one informant, a school-teacher who owns a house and lives at Kimathi, has put it, " I wish they built more like Kimathi. It is certainly one of the best tenant purchase schemes built by the City Council".

The original allottees of Kimathi have good reason to be satisfied with their investment, for the houses now change hands at about £8,000 (2br) and £9,000 (3br). Where houses are sublet, the minimum rent for a three bedroomed unit is Shs 1,000/- per month. Although resale and complete sub-letting for 5 years are specifically excluded from the objectives, they are obviously considerations influencing the individual's decision to apply for a tenant-purchase house. With the large number of persons applying, the team concludes that lack of enforcement of this part of the tenant purchase agreement was expected by the applicants already before the houses were built.

7.3. KENYA CANNERS: 002

Note: Although this project was never consummated it is included here because of the concept of what was being attempted.

7.3.1. Objectives

The main goal in this housing development (which was ultimately built without using the Housing Guaranty Program) was the production of approximately 2,000 units of housing for Kenya Canners Ltd. (a subsidiary of the American Del Monte Corp) in Thika. Kenya Canners had agreed to invest a very substantial sum in the improvement and four-fold expansion of their pineapple production and marketing facilities in Thika. The Company stated that their investment budget did not allow for the construction of workers' housing.

The AID Mission as well as the Government of Kenya (GOK) was very interested in the implementation of this expansion program. Kenya Canners KE6 million investment was expected to generate 3,000 new jobs and boost export earnings some US$ 10 million per year. As an AID memo reported: "it appears that the supply of worker housing may be the deciding factor as to whether or not the project moves ahead".

In this proposed development low income job creation was as vital a consideration as the actual provision of shelter. At the time these housing units were proposed, they ranked as the "lowest cost houses the USAID Housing Guaranty Program has achieved anywhere". There was additional interest in this project because it served a "rural" constituency, and the proposed Borrower was a "democratic" savings and credit association formed by the workers. The loan documents contained language about fostering small business development, but they seem to appear more as a matter of form than substance.

7.3.2. Reasons for Proposing to Undertake the Project

In 1972 the GOK granted a 49 year lease to the Del Monte Corporation's subsidiary Kenya Canners Ltd. of 20,000 arable acres in Thika. Kenya Canners proposed that a portion of this land be detached and used for workers' housing since local accommodations were very scarce. Further, they proposed that the Kenya Canners Savings & Credit Society (and not themselves) be the mortgage holder and sponsor for this housing development. This organisation (a credit union in the U.S. sense) was fully autonomous, registered under the cooperative societies act, had membership restricted to Kenya Canners' employees, and had received in 1972 a loan from the Commercial Bank of Africa (affiliated with the Bank of America) to build 200 houses for its members. The Kenya Canners proposal was looked upon as a second building venture for the savings & credit society; all technical support, however, came from the company.

Kenya Canners original plan was that the GOK would provide the mortgage funds to the credit union. The credit union would hold the mortgages on the individual houses, and each

employee would gradually obtain ownership through monthly payments made through payroll deductions. If an employee left the company, he would receive the "equity" which had been built up, but the house would be re-assigned, and he would have to leave. Once fully paid for, however, the house would belong to the employee regardless of his future association with the company. Kenya Canners "anticipated" that the housing allowance which they paid their employees would cover the required repayments.

Once introduced to this project, the Regional Office of Housing (then in Addis now in Nairobi) expressed considerable support and prepared the necessary documentation in very rapid manner. From a bureaucratic sense this was the first Office of Housing project in Kenya since the Kimathi Estates had been processed by a predecessor agency, the Office of Private Enterprise, Bureau of Africa.

The Regional Housing Office had only two reservations about the project which were both resolved: (1) the problems of a "closed market". There was concern that if Kenya Canners ever had to lay off a considerable number of its employees, there would be no way to re-lease or re-sell the units to non-employees. It was decided that sufficient market research had already been done showing the suitability of the land for a variety of other vegetable crops. (2) the liklihood of obtaining a GOK Guaranty of the loan. Doubt was expressed by Ministry of Finance advisors as to whether such a guaranty would be forthcoming since it would "set a precedent" and encourage other cooperatives and industries to press similar requests. This problem was resolved by the GOK's decision to issue a guaranty for a fee (½% of the loan amount) which would be passed along as a project expense. The AID Mission supported this settlement.

7.3.3. Description of Project

Thika is located 35 kilometers northeast of Nairobi, but due to its connection by a divided highway is considered part of the greater Nairobi metropolitan area. Thika had a population of over 40,000 (1972), a growth rate of 7%, and is a rapidly developing area of industry and agri-business.

There were 3 sites involved in the Thika project and two 1,000 unit phases. The first phase consisted of land on the Anglo-French estate located 2 kilometers north of Thika township's boundary. Discussion will be limited to the first phase.

The first phase was to contain 5 distinct house types corresponding to different employee ranks within the company. The types proposed and various details were as follows:

House Type	No B/rms	House Area (sq.ft.)	Lot Area (sq.ft.)	Sale Price	Total Dwelling Units
Gen. Foreman	3	1,200	18,000	US$7,290	5
Foreman	3	800	15,000	2,430	15
Supervisors	3	600	7,500	1,460	80
Skilled Labor	3	600	6,000	1,460	150
Perm. Labor	2	400	3,000	790	750

The homes for the "permanent labor" would contain two bedrooms and a living room, while the other, larger homes would have a kitchen, bath and dining-living area in various sizes. The houses were to be built of clay bricks with 26 gauge C.G.I. roofs. The first 3 feet of the outside walls would be burnt clay brick with sundried brick up to the eaves and peak of the roof at the gable. Inside and outside walls were to have a 1/4" plaster of cement/lime/sand mixture. Roof trusses and rafters were to be treated with appropriate wood preservative.

7.3.4. Costs and Proposed Financing Terms

The price range per house in Kenya Shillings was from 5,600 to 9,600. Housing in this category would definiately fall into the low cost range.

Kenya Canners had initially discussed a private loan with their commercial bankers, the Commercial Bank of Africa. This bank was willing to provide construction financing but in keeping with the commercial bank regulations would not lend for a period exceeding 5 years. The interest calculations on a loan for such a short period would have demanded such a high monthly repayment as to be prohibitive for the workers.

The total amount requested from USAID for phase one was approximately US$ 1,250,000 with a similar amount for phase two. In comparison with the Umoja package being simulatneously negotiated, this was a "small" deal. There was some doubt expressed as to whether an investor could be found for such a reduced amount. This doubt, however, remained an academic question.

Kenya Canners submitted the following breakdown demonstrating the financial feasibility of the development to the tenant-purchasers:

House Type	Monthly Pmnts.	Monthly Sal.	Housing Allow.	Addtnl Empl. Contrib.
	K Shs	K Shs	K Shs	K Shs
Gen. Foreman	398	3,300	150	248
Foreman	133	1,800	60	73
Supervisor	80	1,000	35	45
Skilled Labor	80	800	35	45
Perm. Labor	43	280	35	8

When the employee's contribution was expressed as a percentage of salary the following results were obtained: general foreman, 7.5%, foreman, 4%, supervisor, 4.5%, skilled labor, 5.5%, permanent labor, 3%. Since percentages of income spent on housing which are considered "normal" range from 15 - 25%, the amounts presented here seem well within the standard.

As previously mentioned, if the loan had been made, it would have carried in addition to the 0.5% AID guaranty fee a sum of 0.5% GOK guaranty fee. The term would have been for 25 years.

7.3.5. Target Population and Selection Methods

As shown in the preceding section, 75% of the houses in Phase One of the project were to be allocated to workers earning the very minimum Kenyan legal wage (K Shs 280 per month). This low income target group was a very different population than had benefitted from Kimathi Estate.

It was estimated that the approximately 1,000 houses in Phase One would accommodate 6,000 people (workers and their families). Allottees would have been KC employees who were also members of the KC savings and credit association. Major selection responsibility would rest upon the company and a to-be-formed "homeowners corporation". This subject was never entirely finalized. The AID loan documents stated: "Whether the homeowners corporation will be responsible for approving the loan application or each individual homebuyer will depend on whether an independent credit committee is formed by the homeowners corporation." As in Kimathi Estate, AID would have required that all units be pre-sold prior to commencing construction.

7.3.6. Institutional Arrangements

The Sponsor-Builder (Kenya Canners) and the GOK (Ministry of Finance) were very actively involved in this HG program. This fact resulted in speedy submission of loan documents for processing. The lease between GOK and Kenya Canners was signed in May, 1972; AID conducted preliminary feasibility surveys in May and June; AID Washington, African Bureau approved the loans in "principle" in August, 1972; and the formal loan committment (the "Letter of Advice") was issued in March, 1973. Anyone connected with government housing programs will recognize the extreme processing speed shown by this timetable.

Throughout the year of processing, the question of whom should be the "Borrower" produced different answers. All during 1972 it was assumed that the Kenya Canners Savings and Credit Association would be the official borrower. This group was formed in 1966, and at the end of its first year had enrolled 204 KC employee members with average savings of KShs 420. By the end of 1971 the number of members had grown to 367 and the average savings to KShs 1,479. The Commercial Bank of Africa had loaned KShs 70,000 to the group in 1972 (secured by a savings account of like amount) to enable the association to embark on the first stage of their housing plan, Though structurally independent of Kenya Canners, the association relied heavily on their support and direction.

AID Washington had reservations about extending a loan to a "captive" company credit union. The committee which had approved the loan inprinciple noted: "Concern was expressed that a loan to a company-dominated Credit Cooperative Society, Ltd. could have adverse political repercussions." What such "repercussions" could be or why they should occur was never elaborated.

Nevertheless, by 1973 all parties had come to an understanding that the borrower was to be a Homeowners Corporation which Kenya Canners would form and support. The AID Housing Guaranty Paper elaborates: "KCL will initially own 51% of the stock of the homeowners corporation, whereas 49% will be held by the individual homebuyers. The control and management of the homeowners corporation by KCL during the initial years of the project is a recommendation of the GOK to insure that the corporation has responsible management."

It would seem that the parties' (and their respective lawyers') inability to conceptualize a "Borrower" satisfactory to all was a prior reason for the project's ultimate collapse.

7.3.7. Why Request for Financing was Dropped

On July 5, 1973 Del Monte Corporation informed AID Washington that they were "terminating negotiations with AID relative to this matter." The reasons behind this decision are somewhat conflicting. Del Monte's statement is as follows: "We regret to inform you that we are unable to proceed to form the homeowners corporation since the Kenya government recommends against individual home ownership at lower income levels, desiring that Kenya Canners have control over housing. Further, we are informed that the Kenya Government does not wish to give a guarantee to AID against losses resulting from its guaranty of the loan." (emphasis added)

AID Kenya did not wholly subscribe to this particular assessment of the situation. AID stated their version of the collapse of this project in a letter to Del Monte:

> "It is our (AID's) understanding that the Del Monte Company elected not to use the housing guaranty authority reserved for the Kenya Canners Project because a decision was made to provide Company housing for the employees."

The Permanent Secretaries of both Agriculture and Treasury had stated that they would not recommend home ownership for field hands. However, their main criticism was directed at Del Monte's attempt to split off housing from the rest of the investment project. In their opinion housing was as much a part of the overall investment package as the factory buildings. Secondly, the guaranty question seems to have been mis-stated by Del Monte. As has already been stated, GOK had agreed to guaranty this particular program to AID; what they had not agreed to do was to make an agreement with Del Monte which would hold the company harmless in the event of bankruptcy of the homeowners corporation.

It would appear that Del Monte and Kenya Canners got tired of the delay concerning appropriate standards for tenant-purchase housing and just went ahead and built the units themselves as rental

with the re-formulation of standards for housing. In the previous year a pre-fabricated concrete housing scheme in Mathare Valley had been stopped by Presidential Decree on the basis of too low standards. At the same time preparations were being made for the 1974-78 Development Plan which would come out recommending site-and-service schemes as the solution for Kenya's housing dilemmas. The MOHSS announced on February 15, 1973 a new committment to lower cost housing, but as the Chief Technical Officer stated to AID representatives: "although there was a shift in thinking at policy level, there had been no indication given as to when this thinking would be allowed to become manifest at the technical level".

One practical result of this GOK debate was to lead AID to plan housing under discussion (Kenya Canners, 002 and Umoja, 003) at a higher unit cost ("at or very near KE 1,200").

The Kenya Canners housing scheme which appears to have been well documented and presented represented a committment to minimal, affordable shelter to the lowest income groups. The ideas behind this project appear to have been too advanced for the Kenya Government at that time, but they clearly pointed the way for future schemes. The jump from upper middle class housing (Kimathi Estate) to very low income housing (Kenya Canners) was one that GOK was not willing to make in 1973. The next AID project (Umoja, 003) represents more of a compromise between these two different types of housing.

7.4. UMOJA ESTATE: 003

7.4.1. Objectives

The USAID staff involved with this project saw the principal goal as an institutional one: the redirection of the Nairobi City Council to a housing policy emphasizing lower cost units. The staff believed that pressure from both AID and the IBRD during an 18 month period from the end of 1972 to the beginning of 1974 was crucial in resolving the GOK housing debate in favor of programs of minimal cost shelter (rather than high cost "showcase" projects).

The AID Housing Investment Guaranty Paper stated it this way:

"The most important objective of the AID guaranteed loans is to help the GOK implement a housing policy with emphasis in favor of the poor by demonstrating that lower cost houses can be built - despite the rises in building materials and other construction costs. The accomplishment of the objective should have a significant impact on the GOK housing policy, particularly with respect to lower income housing. It is highly unlikely that the lower income housing program would proceed as projected without the input of the program. With HG funds, however, the program as outlined in this paper should be able to give an impetus and establish a new direction for the GOK's policy for lower cost housing."

7.4.2. Reason for the Project

In October 1971 the Nairobi Town Clerk approached AID to finance a second project with a proposed unit price in the K£2000 - 3000 range. Unlike Kimathi, a "specific project" HG program, the 2nd Nairobi project had not been evolved beyond the "concept" stage at the time of submission. AID conducted a "pre-investment survey" in 1972 which concluded that a "percentage, to be determined, of houses costing not more than K£1200" should form the bulk of the project. The project, however, was to be national in scope, and AID reserved US$ 15 million for it. The question of who was to be borrower for this national program was left to the Kenya Government for final resolution.

In January 1973 the Kenyan Treasury announced to AID that there were to be two separate housing programs funded with this $15 million. Ten million dollars was allocated to the Nairobi City Council for an urban project (003) while five million went to the National Housing Corporation for housing in towns other than Nairobi (project 004).

Throughout the remainder of 1973 the Nairobi City Council (NCC) worked on their "program proposal", a broad statement of proposed action to remedy the city's housing problems in the years to come. The Nairobi Urban Study Group, a UNDP funded group of experts, helped to frame this program which coordinated the AID project with IBRD and Commonwealth Development Corporation (CDC) activities in the housing field.

In November 1973 NCC submitted an application for the $10 million HIG loan to finance a low cost housing estate containing three basic models costing K£1,000, 1,200 and 1,600. AID felt that this application was "an honest attempt to address the low income problems" (for a different reaction to project 004 and some background to it, see section 7.5.2.)

In January and February 1974 an HIG Appraisal Team visited Kenya and reviewed both applications (003 and 004). The Team worked on reducing the cost of the NCC houses by changing certain design details (especially floor and roof details and incorporating increased amounts of later self-help construction). AID's conclusion after this visit: "As a result, we anticipate that a large proportion of the NCC-constructed houses can have selling prices between K£800 and K£1,100, thus reaching well down into the modern sector low income groups." However, considerable delays occurred at this time mainly over cost-reduction methods. For instance, there had been considerable early correspondence between AID and the Treasury concerning an interest rate as high as 10%. The years 1974 - 75 (when this project was negotiated) were a period of very high interest rates in the US and world-wide. Although the HIG funds were normally 3 - 4% below the unsecured Eurodollar rate, they were still about 3% above the "artificially protected" Kenyan interest rate.

It took some diplomatic negotiations to convince the Treasury to accept this loan (IBRD and CDC were quoting subsidized rates of 7 - 8% at the time for their housing developments), and also to relax a Central Bank regulation of the time prohibiting foreign loans in excess of 9%.

In June 1975, the basic loan and other legal documents were signed by NCC and USAID, and project implementation began.

7.4.3. Description of Project

The Umoja development was built on a single site in eastern Nairobi which is 6 miles from the city center and easily accessible by paved roads on city buses. The basic house design is an "expandable house" i.e. the plans were drawn for a 3 room house plus kitchen, but 75% of the units would be built with only a single room - the other 2 rooms to be built later when the owner could afford it. Houses are grouped in blocks of 5 , 6 or 8 units set in a hexagonal grid so as to provide vehicular access to each plot.

Although there was only one basic drawing, the one room version was styled house type 01, the two room version styled type 02, and the complete 3 room house was labeled type 03.

The footings of the houses are constructed of concrete. The walls are made of concrete masonery 6" thick and stuccoed on the outside face only, while the floors consist of a 4" concrete slab on grade. Wood framing supports a corrugated asbestos cement roofing. The windows are metal frame, and the doors wood flush type. All necessary electrical wiring and outlets were included as well as plumbing and fixtures for

shower stall, water closet and kitchen sink. Each unit was also "improvable" in the sense that certain details remained unfinished. The purchaser had to complete the interior plastering, ceiling and flooring, and there was no sink provided in the bathroom.

The number of units in the Umoja development was not definitely known until the very end of the project when the money had been stretched to its limit. Contract documents speak of the number of planned units to be 2,900. For a while this seemed optimistic but later it was found possible to increase the number to 2,924 by reducing the number of type 02 and 03 units and by increasing the number of units of type 01 (see table on following page). NCC had committed itself to finance and build a market, primary and secondary schools, a clinic and a nursery school plus shopping facilities for private entrepreneurs. The concept of a viable neighborhood was also to be enhanced by allowing for mixed income housing by providing larger plots for private development within the area. Considerable delays have occurred here.

7.4.4. Cost and Tendering

Unlike its two predecessors the Umoja project was a publicly bid job with design and specifications largely worked out by NCC. This procedure entailed several planning and costing problems.

The parties conducted the process of public bidding and tendering against a backdrop of continuing high rates of inflation. This meant a constant struggle to define the exact specifications for the houses that met everyone's definition of "acceptable" and still would be sufficiently low cost when bid so as to be affordable by the target low income group (those in the 5th decile of the population). When bids were received that exceeded the estimates, the process of reducing the scope of construction had to be undertaken to hold the original price and thus retain the units for the same target group.

This process of "reducing the scope of construction" after the receipt of tenders and "correcting" them to make them compatible with estimates and the amount of money on hand led to extreme controversy during 1976.

The job was bid in a number of phases stretching over a period of years as follows:

Area	Date	Units	Amount (KShs)	Builder
zone 1, contract 1	Sept. '75	542	15,601,962.70	Lalji Bhimji Sanghani
zone 1, contract 2	Sept. '75	785	21,382,890.45	Lalji Bhimji Sanghani
zone 2, contract 1	Sept, '75	547	16,986,932.55	Coronation Builders

Area	Date	Units	Amount	Builder
zone 3, contract 1	April, '76	610	18,516,887.35	Coronation Builders
Extension zone 1, contract 2	Oct. '76	100	3,032,017.70	Lalji Bhimji Sanghani
Extension zone 2, contract 1	June, '77	340		Coronation Builders
	TOTAL	2,924 dwelling units		

As can be seen from the table below considerable shifts took place in unit mix as well as in cost price of each category of units. The significant cost overrun was partly justified by a devaluation of the Kenya Shilling in late 1975 which raised the local value of $10 million from KShs 71.1 million to KShs 80.9 million, or an addition of KShs 9.8 million. Still there was a cost overrun of KShs 6.6 million which is not explained by the addition of 24 units, since the shift in unit mix was clearly from the larger to the smallest unit. In fact, had the unit mix remained unchanged another KShs 7.3 million would have been added to total cost. This represents an escalation of 42% in cost (25% after devaluation). In addition costs of KShs 5.5 million incurred by the office of the project director was covered mainly by down payments from tenant purchasers and from portions of their repayments.

	PLANNED			DELIVERED				
House Model	No. of Units	Sale Price KShs	Total Cost KShs (000)	No. of Units	% Change	Sales Price K Shs	% Change	Total Cost KShs (000)
01	870	22,500	19,575	2123	+ 144	30,600	+ 36	64,964
02	1305	27,500	35,888	637	- 51	35,530	+ 29	22,633
03	725	30,500	22,113	164	- 77	39,030	+ 28	6,401
	2900		77,575	2924				93,997

During the fall of 1976 the Kenyan media contained serious charges and counter-charges concerning the handling of the Umoja public bidding procedure.

As far as could be ascertained by AID's Regional Housing Office, however, all prime construction contracts were awarded to the lowest bidder in accordance with the Implementation Agreement.

Due to the fact that the "scope of construction" was reduced just prior to the awarding of a construction contract AID was not asked to approve the plans and specifications at the time contracts were let.

Later receipt of contract drawing (or no receipt at all by AID) severely complicated subsequent monitoring by AID of the "as built" units for contract compliance by the builder. AID, in fact, relied on the NCC for supervision.

7.4.5. Financing Terms

The scheme was to be on a tenant purchase basis. This was similar to the Kimathi scheme and serves the purpose of easy recourse to eviction in case of default - in theory. The loan documents provided for a US$ 10 million loan to the NCC for on-lending for 25 years at a composite interest rate of 10% to the ultimate tenant purchasers. The elements of the composite rate are 8.7% to the U.S. lender (the Federal Home Loan Bank of New York), .50% to AID as the "Guaranty Fee", and .80% to NCC as an "Administration Fee". The rate to Nairobi City Council, therefore, was 9.2%.

Partial construction financing was also provided by USAID in the following fashion: US$ 2.8 million (of the above) would be advanced to the NCC to be used to finance the initial units. Thereafter, permanent money would be advanced as the "allocations have been made and the tenant purchase agreements recorded in the appropriate Registry of documents." (sec. 3.03 of the Implementation Agreement). The infusion of "permanent loan" money would thus free the $2.8 million which could then be rolled over and used again.

This procedure ties together construction loan monies,allocation, recording of units, and permanent loan monies in such a fashion that almost proved disastrous in mid-1976 when Council balked at making the initial allocations - on the other hand, perhaps the threat of job shut-down (the construction money was exhausted) was the impetus which made the NCC finally go ahead and allocate the units.

Once the project was under way, additional discussion began as to the sufficiency of the .8% NCC administration fee and .5% "project implementation" charge. It is unclear just how the figure of .8% was originally arrived at; presumably it is just the amount which reached the "round" figure of 10%. In 1976, .8% of $10 million equalled approximately $80,000 or KShs 640,000.

The City Treasurer's Office originally projected expenses of approximately KShs 1,000,000 per annum to administer Umoja (i.e. process loans, collections, delinquencies, etc.) AID worked out a competent budget within the money provided (which was then accepted by the City Treasurer) as follows:

"There will be approx. 2,500 mortgages to be handled every month and approx. 20 working days to do it. This is 125 per day or 16 per hour. With the proper system and office machines, this receiving and tabulating can be done by 2 - 4 employees. Two other employees should continuously survey a tickler file system of some sort to isolate delinquencies and mail dunning letters. This is the basic routine."

The administrative system included 7 other supervisory and support persons for a total monthly wage bill of $5300, 40% overhead of $2120, for a grand total of $7420 (or yearly total of KShs 712,320). This budget and allocation still seem ample.

Certainly the administrative budget did not contemplate that the loan servicing for Umoja would be carried out as just another burden for the existing staff of the City Treasurer. These funds (.8%) were provided to allow for a separate project administration (though under the control of the City Treasurer) for Umoja. The extent of the present collections difficulties at the project stem, it would seem, from some amount of maladministration caused by the lack of this separate unit. It is a far cry from a roster of 13 people working solely on Umoja (the AID budget) and the present one part time accountant in the Treasurer's office.

Another "charge" that was discussed at some length was the amount of 5% of the construction cost which was credited to NCC for the expenses of the Umoja Project Unit and other city officers in developing the estate. AID resisted an attempt to increase this amount to 8%; as it is the amount almost identical to that paid as a down payment by the allottees. Therefore, the down payment money had been considered as the property of the NCC, and neither it nor this charge appear in the AID mortgaging documents.

The payments to the tenant purchaser are as follows:-

	House Types 01	02	03
Sales Price	KShs 30,600	35,530	39,030
Downpayment	KShs 1,530 (5%)	1,777 (5%)	3,903 (10%)

The monthly repayments are:

	House Types 01	02	03
Principal & Interest	265.50	308.50	320.50
Rates	12.00	12.00	12.00
Insurance	5.00	5.00	5.00
Ground Rent	12.50	12.50	12.50
Total	295.00	338.00	350.00

The only cost element which greatly exceeded estimates was closing costs, or more particularly, "Stand Premium". Stand Premium is levied one time by the Commissioner of Lands pursuant to the Government Lands Act at a rate of 20% of the value of government allocated land. The capital value of each Umoja Plot was set at KShs 3,500/- and the Stand Premium, therefore, at KShs 700/-.

7.4.6. Target Population

Completing construction and sale of units affordable by the "target population" was RHUDO's primary consideration during the Umoja development process. This critical emphasis was a result of the "new directions" US legislation in the early 1970's. AID was directed to aim its programs (including the HIG program) so that they give "highest priority to the improvement in the lives of the poorest of the people." This statement was explained by a numerical test which had to be followed.

AID Handbook 7, "Housing Guaranties", sets out the rule: Sec. 3 (a) "projects...should as nearly as possible reach the lowest income level of the regularly employed persons in the area. In general the income of the families served should be below the median for the area to be served." (emphasis added)

Throughout the entire project period, therefore, the Nairobi RHUDO office was constantly checking with the Central Bureau of Statistics (and others) to monitor the latest urban income figures. Income figures would then be matched with the latest cost and mortgage repayment numbers.

Unlike Kimathi Estates in which a rise in costs (and thus income repayments) would only have had the effect of leading to a higher income group of occupants, a rise in cost in both projects 003 and 004 would have led to a group of occupants with income above the median, violating USAID program regulations. For the RHUDO staff, therefore, increases in project costs which would have to be passed along in the form of higher mortgage repayments could only be allowed if matched by higher national incomes if full cost recovery from recipients was to be maintained and the arbitrary rule followed that a purchaser pay only 25% of their income. Whether justified or not it was ostensibly for these reasons that NCC made design adjustments in an attempt to keep costs within the affordability range of the target group.

The target population for Umoja as originally envisioned was the group in the 3rd to 5th deciles of income. RHUDO produced the following chart to demonstrate this:

	Income	Annual Household Income		Annual Income Required
		1975	1976	
		KShs	KShs	KShs
2nd Quintile	30% Lower Middle	11,019.00	12,561.00	13,760.00 (type 01) (1,146/- monthly)
	35%	13,446.75	15,329.00	16,160.00 (type 02) (1,346/- monthly)
				16,726.00 (type 03) (1,394/- monthly)

	Income	Annual Household Income 1975 KShs	1976 KShs	Annual Income Required
	----40%----	15,874.50	18,097.00	
	45% Middle	18,302.25	20,865.00	
3rd Quintile	50%	20,730.00	23,633.00	

The text accompanying this chart stated:

"Using 1976 estimated Household Income, Type 01 house can be purchased by a family with Household Income of the 32nd - 33rd percentile bracket; Type 02 house can be purchased by a family with Household Income of the 36th - 37th percentile bracket; Type 03 house can be purchased by a family with Household Income of the 37th - 38th percentile bracket."

"Based on the above, it can be seen that the houses can be purchased by individuals falling into the second quintile."

Two things should be kept in mind while reviewing this data: there is a substantial margin for error when working with such imprecise concepts as specific 1% of household income distribution and that when this chart was produced (Sept. 1975) the first contracts had just been let. Three months later AID hired an American firm, Real Estate Research Corporation, to provide more up-to-date information.

Reviewing this first table, two other things become apparent: RHUDO's annual required income" equates most closely with Real Estate Research Corporation's 1977 projections (valid in the sense that most occupancies would not be until that date), and that these figures are somewhat lower than RHUDO's.

The Real Estate Research projections are as follows:

Household Decile	1975	Income Levels Mid 1976	(KShs/Mo) 1976	1977
10%	644	692	741	852
20%	706	759	812	934
30%	866	931	996	1,145
40%	1,034	1,112	1,189	1,367
50%	1,274	1,370	1,465	1,685
60%	1,641	1,764	1,887	2,170

These figures though lower than RHUDO's still contained an adjustment for rental income derived from sub-letting and a 10% adjustment for unreported income.

In Dec. 1976 the Nairobi Town Clerk put out the first notices inviting applications for Umoja from "lower middle and middle income group families." The NCC income criterion for entry into the development was that the entire income of the husband and ½ the wife's monthly income must be at least KShs 800/ and at most KShs 1,600/.

As a follow-up monitoring and evaluation exercise, in February, 1978, AID commissioned a survey of 335 houses in Umoja. This study revealed that the following actual monthly average income of the occupants at that time were:

Household Type	Allottees KShs/Mo.	Non-Allottees KShs/Mo
01	1,156	1,502 (29.9% higher)
02	1,293	1,826 (41.2% higher)
03	1,279	2,255 (76.3% higher)

In Feb. 1978 the median income of all allottee families in Umoja was KShs 1,190.90. Using this figure, it would appear that RHUDO met "new directions" test in bringing the benefits of the program to allottees who (originally) were below the Nairobi median income. Whether they were in the 3rd of 4th decile becomes a somewhat academic exercise.

Another reality, not shown in this table, is the fact that the majority of units have now been totally sub-let to other higher income persons. Units are also appearing for sale in the daily papers at highly inflated prices. As in the case of sub-letting the prices asked for 3-roomed units are relatively higher than for the smaller units, reflecting the effective demand and market value of these units.

With the receipt of rental income from (illegal) total sub-letting, the incomes of some allottees would ascend the economic "decile" scale quite considerably.

7.4.7. Institutional Arrangements

Once Treasury approval had been obtained for the basic loan, the only Kenyan institution involved in this project was the Nairobi City Council. The more specific details of the Umoja Project Unit and the Housing Development Department will be covered in this section.

7.4.7.1. Umoja Project Management Unit

In a formal letter to AID in Dec.1975, the Town Clerk spelled out the organisation of the Umoja Project Management Unit (the implementing city agency) and the power of its director. The thrust of the letter was to re-affirm the Council's delegation of authority to the Project Director for the implementation of this scheme. His appointment was discussed in Washington, and it was duly authorized by the NCC and subsequently approved by the GOK. He was to be assisted by a working team which was done by drawing officers from various departments of the City Council.

The RHUDO office was fully supportive of this move stating that same year that NCC should be encouraged to give the project

director responsibility and authority for all aspects of project implementation from planning and design through buyer selection until dwelling units were occupied and tenant purchase agreements were completed. RHUDO believed it was vital to identify the central decision maker and have a strong project management.

The staffing requested for the Project Unit in 1975 shows the huge size of the operations: the request was for 1 project director, 2 assistant architects, 1 project engineer, 2 quantity surveyors, 6 assistant quantity surveyors, 4 resident engineers, 12 inspectors of works, 30 works supervisors, and 1 accountant. This was a staff of 59 people.

The ambiguity in all of this planning was that the new entity intruded into the functional areas of existing city officers. The AID Guaranty Paper had listed the functional responsibilities of Nairobi City officers:

"Financing, audit reviews, and mortgage administration are functions of the City Treasurer; technical planning, architectural design, and construction are responsibilities of the City Engineer; legal services are performed by the Town Clerk's department directly and the Social Services and Housing Department administers allocation of the units to individual applicants."

By the summer of 1976, however, the Umoja Project Management Unit had become so autonomous that the City Engineer was requesting clarification as to whether the Project Manager reported to him or not. The Town Clerk decided that since the Project Manager had received the "delegation of authority" he would not have to report to the City Engineer (the Project Management Unit got its own stationery). But tensions continued to grow and in February of 1977 the City Engineer was removed from his post. Although the decision was also prompted by other considerations by the Council it demonstrated once again that institutional arrangements are not easily changed unless the major actors involved have been convinced of their relevance and give their consent and support. Failing this, they are likely to do all in their power to prevent the changes from coming about, - and not always from narrow personal motives. In fact, professional officers of the NCC have often disagreed strongly with decisions taken at the political level of the Council. From the point of view of the USAID regional housing office there was an obvious advantage in maintaining the Project Management Unit in order to secure close and direct supervision and clear responsibility for the completion of the project.

7.4.7.2. Housing Development Department

From the very outset of project planning, USAID and the IBRD were in contact as to the types of housing project each organisation was planning for Nairobi. Coordination between these two groups have been quite cordial and satisfactory. Within the NCC, however, rivalry seems to have developed quite early between competing sets of officials who were to implement the two major schemes.

Simultaneously with the Umoja developments, the IBRD was funding a study (Coopers & Lybrand/Institute of Local Government Studies, Univ. of Birmingham) to outline a reorganisation of the NCC. One recommendation was for the formation of a city wide NCC Housing Development Department. NCC formed this department in 1978 under some pressure from IBRD to administer their programs (the Dandora Project Committee became the Housing Development Department). The Umoja Project unit wasn't mentioned nor affected.

In 1978 the NCC attempted to accomplish the integration of the two groups by proposing the elevation of the Umoja Project Director to Director of the Housing Development Department. This effort failed because of the personalities involved and because of strong opposition by central government, labor organisations and some NCC officers. In the end the former chief planning officer of NCC was appointed to the post of Director of H.D.D. but as of today there is no integration of the two entities. In fact, it seems politically more feasible that any new extension of Umoja be undertaken as a separate venture with its own project director.

7.4.8. Selection System

One of the documents included in the Implementation Agreement between NCC and AID signed in June, 1975 was an allocation procedure adopted by NCC and approved by AID.

RHUDO withstood an attempt by NCC to have 25% of the units allocated to NCC staff within the income range of the target group. In a letter to the Town Clerk it was stated:

"I am sure that the Council, as we have been, and will continue to be, subject to many powerful pressures to allocate houses to specific worthwhile lower-income family groups. We are completely convinced that it is not appropriate to start making exceptions to the procedures established by the Council."

The application system commenced in February, 1976. A total of 20,000 application forms and explanatory brochures had been printed. They were to be issued at two windows of City Hall for a fee of 25/ during a period between Feb. 2 - 28, 1976. To ensure proper issuance, the City Council Security Officers were ordered to place their official seal on each brochure.

Applications would be collected at the same City Hall windows from Feb. 9 - March 8, 1976. A preliminary committee would then sort the applications into two categories: complete applications and incomplete ones. All completed applications were sent to the Project Director while a duplicate was sent for scrutiny by computer.

"Scrutinizing" would be performed by the computer and also "manually" by a committee composed of the chief attorney, city treasurer, director of social services and housing, chief architect, chief valuer, and chief planning officer. The computer and the committee would each produce a list of those "qualified" and those "not qualified". When an "agreed" list had been prepared by the two groups it would be tabled before the "Project Committee."

At this point the computer would be used again to perform a "random selection" to choose the final allottees. The computer was to be operated by the Mayor of Nairobi in the presence of the Council members, press and public. A list numbered from 1 to 3000 of applicants was to be immediately published as well as a list of unsuccessful applicants.

This was the plan.

During the application period approximately 24,000 application forms were sold and of these approximately 15,000 were returned. Most of the applications were rejected as ineligible (approximately 11,000) either above or below the income standards or as duplicates (people had apparently submitted multiple applications). This high rejection rate caused a good deal of dissension and the Kenya newspapers were again very outspoken in their criticism of the NCC.

A few days later the Director of the Computer Center used by the Umoja project unit delivered to AID one copy of the print-out of all eligible and ineligible applicants. He expressed confidence that the allocations would be fair and without bias provided the ballotting was also fair (i.e. the 5,150 "eligible" names had to be ranked from 1 - 5,150 by means of random, computer "ballot").

At this point the standard procedure began to go awry: The Nairobi City Council refused to make the allocations (the first few hundred houses were ready for occupancy - immediate allocation was necessary to "roll-over" the money invested in them so that it could be freed for construction financing of the next phase). The Councillors were threatening to disobey the allocation procedures set forth in the Implementation Agreement for Umoja, disregard the advice of the municipal officers (Town Clerk, etc) and make up their own allocation rules.

AID representatives in Nairobi told NCC officers that any change in the allocation procedure without AID's approval would be a material breach of contract. Further, in the event of a material breach of contract AID Kenya would recommend that no further funds be disbursed. This severe action was avoided as the Council backed off any pronouncements altering the allocation procedure.

In 1977 a team from the US General Accounting Office (an arm of the US Congress as opposed to AID which is a branch of the Executive Branch of Government) attempted to review the Umoja applications. Two randomly selected applications (applicant 007679, ballot position 383, and applicant 020857, ballot position 439) revealed that the incomes were revised (by an official) following a second scrutiny of the forms.

There was a considerable amount of "reallocation" of houses during 1976 and 1977. This process was questioned by AID as it certainly gave the appearance of impropriety, but was defended by the project director by referring to the order in which allottees signed their agreements.

In its search for verification of compliance with eligibility the Team has come across allottees which did not qualify for

a house in Umoja. They had been selected by giving false information on their application forms (knowing what the selection criteria were).

As opposed to the IBRD sponsored Dandora site-and-service scheme for which the computer selection system was designed there was no interviewing of applicants after scrutinization for the Umoja scheme and no publication of allottees in the daily press.

7.4.9. Community Facilities

Anticipating the problems of delivery of community facilities so that they would coincide with the new housing, AID considered, during project development, the inclusion of financing of community facilities under the HIG. However, such facilities were not included in the financing. Consequently, the community facilities listed in the 1975 Implementation Agreement (namely, two primary schools, 1 nursery school, 1 secondary school, 1 health clinic, and market and shopping facilities) to be provided by the NCC were not ready by the time the houses were occupied.

In Feb. 1977 when the first phases of homes were being occupied only one primary school was under construction (it had been promised by NCC to be ready for opening on Jan. 1, 1977). No other community or commercial facilities were then under any stage of construction; the NCC had no money available.

In 1977 the Nairobi Town Clerk stated to AID personnel that "in future all such projects must have community facilities associated with them right from the very beginning, and that the Council must have the funds appropriated right from the beginning to insure that these facilities are built."

The Feb. 1978 survey of 335 Umoja households indicated large numbers of resident complaints about the lack of these amenities, (health clinic, shops, markets, entertainment facilities, playgrounds, etc.)

It should be noted that at the time of writing (July, 1979) a number of community facilities have now been provided. One kindergarten and one primary school are already receiving students, one health centre (dispensary) and a market are also complete and in operation.

The team noted the very high standards - and the consequent level of construction cost - for the community facilities. Particularly the market which consists of an office and a large number of small stalls of no more than 2.5 x 2.5 meters all with electric lights and placed within an enclosed area. The monthly rent for a standard stall is Shs 230/- per month. Several stalls have been closed for lack of payment and stall-holders explained that it was very difficult to make enough profit on the standard goods (most of which have controlled retail prices). They would prefer more space for goods (many used the limited circulation space in front of their shops to display vegetables and to manufacture windows, cabinets, etc). Instead they said they did not require electric

light in their stalls nor as high a standard of finish. The analogy to low-income housing is an obvious one. The physical provisions match neither the requirements nor the affordability of the small trader. He/she is provided with a costly solution to which the reaction is either to sub-let to the more affluent who carry more expensive items in the shop and/or to set up a small "sub-standard" stall somewhere else in the neighborhood (illegally). For those who remain in the council-provided market, the high rent must of necessity be passed on to the consumer via the prices charged on the same products which are now sold less expensively from the clandestine stalls outside the market, - thus reducing the demand for goods and consequently the profitability of the market stalls. Only effective policing of the clandestine shops can reverse this trend.

Instead, the new policy adopted for low-income housing could be applied to provisions of shops. This implies that simple, spacious stalls with a maximum of flexibility and expansion possibilities but a minimum of "fancy" trimmings, walls and foundations be provided. This is not only more in line with what people can and will do for themselves, but it requires much less of an investment with the consequent lower rents and lower prices for goods traded.

A separate study with recommendations ought to be undertaken of this particular aspect of new housing estates. Similar studies are under way with regard to school buildings and dispensaries, although results have not yet manifested themselves widely.

With regard to the enevitable and very positive small scale manufacturing which is evident in low income housing areas (the frequency appears to be inversely related to the level of income) Umoja has its share, but without having planned for it. Thus, the most common activities in this field: bed and cabinet making, shoe repair, hair dressing, burglar proofing, bicycle repair, etc. has no other legitimate place to go other than the municipal market where there is neither space nor economic advantages. This is a shortfall which can easily be rectified in the new extension.

7.4.10 Present State of the Project

Apart from what has been said above about the community facilities the main impression of the project is that it is still a settlement in expansion, i.e. new housing being built (new O3 type units presently being sold at KShs 75,000 with a deposit of KShs 15,000 at the time of application - and selling well to higher income persons for investment) and existing houses being expanded (more than half of the original type O1 and O2 houses have had one or two rooms added and expansions are still continuing).

It is to be expected that owner-occupiers are more keen to expand than tenants. A casual investigation also reveals that the same occupancy criteria determines how well the house and the garden are maintained. A considerable investment has gone into such items as burglar proofing of windows, fencing, gates, boundary walls and interior decoration. Likewise, gardens have often been planted with flowers and food crops such as bananas, maize, cassava and onions.

On the negative side the team noticed an obvious lack of street maintenance including clearing of stormwater drains. The continuing addition of rooms results in mounds of ballast and sand in many places, some of them no longer apparently needed. Similarly, heaps of rubbish of assorted kinds could be seen in various places. The lay-out of Umoja does not lend itself to an easy orientation and in some cases is ever dangerous because of frequent intersections of pedestrian and vehicular traffic. The physical environment is rather monotonous and lacks trees and other landscaping assets.

The Umoja Estate is not yet adequately served with public transport to satisfy reasonable demands from the occupants, however, there is a frequent and (too) fast service by "matatus" to and from the centre of Nairobi. The report prepared by the Bureau of Educational Research (March, 1978) describes the residents of Umoja and their likes and dislikes in great detail. The main complaints being of the items listed above plus the low quality of finish, inadequate ventilation, and poor room arrangement of the houses themselves.

Cost recovery in Umoja has been lagging far behind the planned schedules worked out by NCC. This is due primarily to the failure of NCC vigilance in pursuing arrearages. At the beginning of 1979 there were arrears to the amount of over KShs 2 million, and individual accounts were not brought up to date. There is no question in the team's view that all of the money outstanding can be collected if the machinery set up for this purpose was activated and implemented systematically. It should be added that there has been no default on the payment of capital and interest from the NCC to the U.S. investor.

Since it is envisaged that the Umoja estate is to be expanded to about twice its present size it is important to point out that many of the negative aspects listed above can be rectified when planning and designing the new phases begin. The cost recovery program, however, cannot wait, instead, no new project should go ahead unless NCC demonstrates its ability to collect, or alternatively, turns this responsibility over to another agency (private or public) and pays it an administration fee.

If lack of maintenance is due to shortage of funds in the appropriate NCC accounts, then the rate structure must obviously be reviewed, but it is the team's impression that a decentralization of service facilities such as work crews, equipment and supervision may be sufficient and no more costly than the present arrangement.

7.4.11 Achievement of Objectives

The question of whether Umoja achieved its objectives is not as simple as it may appear. If the same criteria were applied to Umoja as to the old (1963) Kariobangi site-and-service scheme it should equally be termed "the scheme that failed". The main criterion, then, being whether it created better housing conditions for those to whom it was allocated. However, the study team takes a different point of view. The Umoja project was

completed in time and with only acceptable cost-overruns. It is occupied by people within the income range envisaged even if more than half of these are tenants and not owners, and - perhaps most importantly - the units are being expanded at a rate which is in line with predictions at the time of conception. This latter fact is a clear indication of the way owners meet the effective demand (their own or that of others) at no cost to the public sector. The level of rents and the sales price of existing units also demonstrates the economic viability of the project. Rents advertised in the daily press are listed as: Shs 350, 550, and 750 for type 01, 02, and 03 respectively. A type 01 unit was recently advertised at Shs 37,000. There is no evidence of any other owner being so conspicuously defying the contract agreement not to sell to the public before five years of occupancy.

In terms of providing better housing for its occupants - as opposed to the allottees - the only and most easily verifiable evidence is the demand and the consequent occupancy rates in Umoja. On this basis the scheme can be said to be very successful.

Even if many tenants state that they paid less for housing where they lived before, the fact that they moved to Umoja at a higher price must indicate that they considered this a change to the better. For those allottees who do not live in Umoja the only interpretation possible is that they preferred the income from sub-letting to a change in their housing situation whether due to a different set of priorities or due to the superiority of their present dwelling or both.

In any case the objective of creating an impact on the supply of housing for the lower income groups has been achieved. What has not been achieved however, is the objective of assuring that those allotted the houses were those most in need of better housing or improved income. In short, the selection system, or the way it was administered, was not fair. It may also be that the selection criteria are themselves excluding some of those families most in need of better housing. The question of affordability becomes almost hypothetical in the face of the income-generating capacities of Umoja housing units, the bigger the units, the higher the income. In fact, the team questions the present selection criteria and has suggested new ones (see 7.6.2.).

Another objective of this and other HG projects was that of strengthening institutional capabilities. The achievement of this objective is questionable. There is no doubt that the project management unit operated efficiently once its powers and responsibilities were defined, but it is doubtful whether the normal NCC machinery has gained in capacity of efficiency. Much evidence points in the opposite direction. On the other hand, new projects of this magnitude must in the longer term help NCC revise and improve its political as well as its technical competence. The technical assistance offered along with these projects very definitely assist in this. Also, the political climate in Kenya is now such, that inefficiencies and irregularities in local government, as in other public sector institutions, will not be tolerated. Kisumu, Mombasa and Kiambu Councils bear witness to this fact. The integration

of project management units into the Housing Development Department and this department's full and practical integration into the NCC organisation still poses problems, but once resolved should make the planning, construction and management of new projects easier.

The Umoja site was vacant publicly owned land. Its use, therefore, did not record any impact on the rest of the Nairobi land market, - other than to bring closer the day when public housing developments will have to compete on this private market. For this reason also the economics of low income housing and their physical provisions will soon have to be re-examined. Umoja's idea of expandable units has gained in credibility not only by the large number of applicants but also by the rate at which units are now expanding. This is not to say that this was the optimal way of approaching the prevailing housing shortage. In fact, with the funds available a far greater number of units could have been produced if a strategy to phase the project and encourage early repayment of loans had been adopted (mechanisms for this are outlined in 7.6.6 of this chapter) thus transferring some of the considerable income creation from the allottees to the project for its expansion.

The classical dilemma in low income housing, namely that of reducing cost to the point where the units become affordable to the target group also plagued the Umoja project. Not only has the dilemma again been proven largely false, but the reduction in standards took place after the project had been approved and is thus tantamount to a cost overrun. In order of magnitude the team estimates it to be about 20% of the tendered price. This was the difference between the quantity surveyors' estimated cost and the lowest tender offer. We have not made much of this fact in judging the feasibility of the project, because the original estimates could have been too low, but in any project, for the end product to correspond to the agreed upon plans and estimates must be an objective by definition.

7.5. NATIONAL HOUSING CORPORATION: 004

7.5.1. Objectives

Since both projects 003 and 004 were initiated together (and in fact were processed by AID in one Housing Investment Guaranty Paper), the objectives were identical, namely institution building to support low income housing. The full text of the AID intention has been presented in section 7.4.1. of the Umoja Estate presentation.

7.5.2. Reasons for the Project

As discussed in project 003, USAID performed a "pre-investment survey" in early 1972 which indicated that the greatest need for housing was in the unit cost range of less than K£1,600. In 1973 USAID in Washington approved in principal a housing guaranty program for the NHC for the sum of US$ 5 million for housing costing less than K£1200. The AID reasoning was that "more conventional funds" could be attracted to finance moderate and higher income housing. These figures and the reasoning was probably accurate in 1973. Since then figures are up by 100%.

Nevertheless, in December, 1973 the NHC finally submitted an application for a US$ 5 million HIG loan to finance housing estates in 12 Kenyan municipalities (other than Nairobi) at unit costs varying from K£ 1,375 - K£ 1,875.

Following this submission, an AID HIG Appraisal Team visited Kenya during Jan and Feb 1974. They found that the NHC application was "not acceptable" because of the excessive cost of the units proposed.

An AID memo summarized the situation: "The NHC is faced with a major shift in its operations from middle income housing construction to sites-and-services, the emphasis it has been assigned for the next five years in the draft 1974-1979 Plan. The Corporation would have preferred to use the AID program with its commercial interest rates and home ownership provisions for more traditional programs, and had <u>not attempted</u> to <u>submit</u> the type of program in which AID had expressed interest". (emphasis added)

During 1973 intense debate had gone on within the Kenya Government over the future direction of housing policies. Internal AID memoranda, "admittedly over-simplifying" relate their perception of this struggle in terms of describing two factions within the GOK consisting of one group advocating 'high standard' (showcase) projects with the other group recommending basically a minimum shelter approach. Consideration of the AID and IBRD projects was delayed for some 18 months during this policy struggle. Ultimately, the "minimum shelter" or "technocrat" group emerged essentially victorious (although at one point, the opposite conclusion seemed likely) and the Kenyan development plan adopted in 1974 reflected increased housing investments at the lower end of the price ranges. There is no doubt that the AID and IBRD positions were important ingredients in this decision. It should be noted that at this time only Nairobi

had both large IBRD and AID projects, whereas NHC had only a modest AID project.

It is clear that by mid-1974 project 003 under the NCC was considered an honest attempt to address the low income problems. The same committment appeared to be lacking at that time in NHC. The 2 borrowers obviously had different opinions of the type of housing that was necessary and NHC in particular had a record of building houses for the middle and higher incomes in provincial towns. AID, however, because of the "new directions" in American aid policy was totally committed to housing for those below the median income of the country. Thus, the NHC had no choice but to redesign one of their standard house types in order to reduce cost further.

7.5.3. Description of the Project

The National Housing Corporation project is a complex and complicated development. It is a scattered site development in 12 larger Kenyan towns, namely: Nakuru, Thika, Eldoret, Kitale, Nyeri, Meru, Embu, Kericho, Nanyuki, Mombasa, Kisumu and Malindi.

The basic house design is "expandable" in the sense that although plans were drawn for a three-room house, the units as built consist entirely of 1 or 2 rooms which the allottee may complete at a later date when his funds permit. There are 3 variations of house types: a "highlands" type, a "lakes and coastal" type (built only at Kismum and Malindi), and a "special" slightly larger design for Mombasa.

The design, bidding, and construction process can be divided roughly into three overlapping stages: 1972 - 75, the design stage, 1975 - 77, the approval of development plan and land sub-division stage, and 1977 - present, the actual construction stage. Individual projects may differ somewhat from this general outline. The value of this generalization, however, is that it indicates that nearly 5 years elapsed between initial discussions and construction.

7.5.4. Costs and Financing Terms

Charts 1 and 2 display the variance in unit numbers and construction costs at three points in time: November, 1975 (the month that USAID architects came to Nairobi from Washington to finally settle the design question after 3 years); March, 1977 when the NHC Project Director began to forward a new cost accounting and monthly reporting format to USAID (at this time the NHC had changed the cost allocation system to one based on floor area of habitable rooms so as to "make the difference greater" between 1 and 2 room units); and the most recent figures available (showing the revised "pragmatic" pricing system to keep the 2 room units priced below "what is acceptable").

Besides the different pricing systems in use in this project, these charts reveal a number of important points: first, the dramatic reduction in the number of housing units that were actually built (284 one room and 717 two room units for a total of 1,001) compared with the number called for in the contract documents ("total of not less than 1,400 units will be constructed, with a maximum selling price of KShs 32,000 per unit").

Secondly, the charts show that the final selling prices rose approximately 7% on the one room units and 32% on the two room units (individual projects recorded cost increases of up to 107%). This lack of cost control is very evident when compared with the results of project 003, Umoja, which was developed simulatneously. In the case of Umoja the total cost was restrained to a 5% increase. To achieve this, the unit-mix was changed in favour of the smaller units, but the planned number of units were delivered in time. (see 7.4.4).

The controversial method adopted in Umoja was to correct the tenders through a reduction of the standards of construction so that they matched the amount of money available for the work. In project 004 there was no question of reducing the standards, inflation was allowed its head, costs soared, and the planned number of units constructed fell by nearly 30%.

The loan documents provide for a US$5 million loan for a term of 25 years at a composite interest rate of 10%. The elements of the composite rate are: 8.7% to the Investor (the Federal Home Loan Bank of New York) .5% to AID as the "Guaranty Fee", and.8% to the NHC as an "Administrative Charge", except that in those projects in development Group C (see section 7.5.6. of this report) entirely handled by the local authorities, the.8% is split between the NHC (.3%) and the local authority (.5%).

Partial construction financing was also provided by USAID in the amount of US$1 million (of the above $5 million) which could be drawn down by the NHC for this purpose. As in project 003, permanent financing would be available at the completion of the houses when they had been allocated and the tenant purchase documents executed and submitted for recording.

In February 1976 RHUDO contacted NHC and suggested that "some form of variable monthly payments" be used in the project (presumably some form of a "progressive rate" mortgage system as opposed to the more common "fixed annuity" system). The NHC replied that "consideration" would be given to this idea, but the concept seems to have been dropped at a later date with no further discussion. The use of a "progressive rate" system might well have sufficiently lowered the initial payments required at some sites to overcome the initial sales resistance.

The lengthy construction delays on this project also caused financing problems. The loan implementation documents contained a loan "draw-down" schedule (i.e. the dates by which the sponsor NHC had to draw-down and borrow the money from the Investor). The dates for these draw-downs occured without the NHC having built enough housing units to use the money.

The US Investor refused to extend the dates, and NHC was forced to borrow the money and place it in escrow. Once this happened the NHC was liable to the Investor for interest and to AID for the Guaranty Fee, but NHC could not cover these charges completely with the proceeds of short term investment of these funds which were earned by the escrow account.

Nevertheless, former officials of the NHC have stated that the incentive to complete the job that began to be manifested in 1977 and 1978 was largely based on the fact that the NHC was suffering an economic penalty through inaction. The same official expressed the thought that such a system of internal financial penalty for delayed development might be appropriate for all NHC projects vis-a-vis the local authorities.

In like fashion, the NHC passed along the investment losses to those councils which were developing their own projects. In letters to the Kisumu Town Clerk, the NHC informed them that their account was being debited an amount to cover this short term investment loss through delay in their development and consequent delay in the use of funds.

The procedure in project 004 is that subsidiary loan agreements are made between the NHC and the local councils. It is the local council which actually collects the monthly mortgage payments and forwards them to the NHC. At the end of 1976 the local councils were nearly US$1 million in arrears to NHC, on all projects. If this condition persists for this project, NHC will have to use other resources to meet its obligation. Since there is no reserve fund for losses built into the project, there is no certainty that the NHC would have such surplus capital on hand at any particular moment.

7.5.5. Target Population and Selection Procedures

The same AID "new directions" legislation applied to the NHC project as it did to 003 (see sec. 7.4.5. of the Umoja report for a full description). Therefore, the program was aimed at lower income families.

No specific studies of incomes, costs or rent propensities were commissioned by either the NHC or AID for any of the 12 towns in the NHC project. The method agreed to and adopted by both parties was to use the Real Estate Research Corporation's study of Nairobi household income distribution (see sec. 7.4.5.) and to trend the material accordingly for the more rural towns. A surprising development was that data obtained from the Central Bureau of Statistics apparently demonstrated that the median income for these rural towns (such as Nanyuki) was "equivalent" to that of Nairobi! The income data was therefore not trended downwards at all.

In accordance with this formula, NHC wrote the following to AID in February, 1977 setting forth the Nanyuki result:

"In accordance with the household income distribution in Nairobi as set out in the Study prepared by the Real Estate Research

Department, the 50th percentile income for Nairobi is Shs 1,555/- per month for 1976, and we agreed that we could use a similar figure for Nanyuki."

Admittedly, the drawing of income percentages is a very impressionistic affair, but as we have seen in the Umoja report, the result seemed quite high for Nairobi itself (50% too high when compared with similar studies made by the Nairobi Town Planning Department). To now transfer this Nairobi figure to the rural areas seems highly dubious; nevertheless, there is no hard data existing to contradict this approach.

Even this approach had to be modified in the face of serious sales resistance to the units in some towns. Income limits for the target group were raised as high as KShs 2,000 in Embu (see chart No. 5).

The selection procedure itself involved the individual town councils. The basic eligibility criteria were agreed to by AID and NHC and then transmitted to the town council. Advertisements were placed for the units (by the NHC or town council), and applications received. Eligible applications were then readied for "ballotting". Chart No. 4 records the differing sales story in each community.

A ballotting committee met in each town usually chaired by the Provincial Commissioner with the Town Clerk as Secretary and with a representative of the NHC in attendance. Applicants were requested to be personally present to answer questions. All the names of eligible applicants were placed in a "ballot tin" and successful names were then drawn out. Since the demand for the 2 room units was much stronger than for the 1, unsuccessful applicants for a 2 room unit were often given the chance to join the ballot for the 1 room units. Only in Kitale have serious irregularities been noted (the Council refused to accept the upper income limit).

7.5.6. Institutional Arrangements

There were two separate development methods for the 13 sites in this development. One method (styled "category A") left total development responsibility with the National Housing Corporation. In this system the NHC would be responsible for selecting a site and preparing the site plan, engineering drawings, and tender documents. AID's assent would be necessary for the design (i.e. the standard highlands or coastal house types) and for the sales price in each individual location. This method was followed for all sites except Mombasa, Kisumu, Nakuru and Kitale. In addition, Nakuru and Kitale reverted to method A during the development process when difficulties were experienced. An obvious difficulty encountered with this procedure was that the local authority very often felt left out of the process and resentful for the way that the development was proceeding. Although the A category procedure normally calls for tenant selection to be done by the NHC, most local authorities were allowed to handle this task themselves (with a NHC representative in attendance).

Though development work was done by the NHC on behalf of the local authorities in the A group, subsidiary loan documents were executed between the local authority and NHC. Mortgage collections would be made by the local authorities and then remitted to NHC. There were, however, no legal documents executed between USAID and the local authorities. This situation meant that the local authorities had never been involved in the discussions as to the "lower income objectives" of the whole project. In late 1976 RHUDO noted in an internal report to the USAID "Senior Evaluation Committee" that there was:

"Lack of communication between NHC and the Municipalities regarding lower income objectives established by GOK and AID".

This problem surfaced during the allocation procedure when one council flatly refused to abide by the AID imposed maximum income criteria.

Even though Kenyan municipalities (other than Nairobi) are prohibited from entering into direct borrowing obligations with foreign agencies without the consent of the Treasury, it seems that their assent to the terms of the Implementation Agreement could have been secured simultaneously with its execution by the NHC and USAID. As it was, no such agreement had been obtained until some years after the project officially began. Immediate involvement of the local authorities in some capacity would have been helpful.

This general problem of involving the local authorities in the formulation and implementation of national housing policy has recently been discussed in a Ministry of Housing & Social Services publication (Preliminary Report: Kenya Urban Housing Needs and Demand Study, 1978). Some conclusions from this report follow:

"It appears that housing policy is formulated from the top (i.e. the Ministry of Housing plus the National Housing Corporation) without referring to the local authorities."

"There is a lack of communication between the Ministry and the local authorities concerning housing issues."

"It was obvious...that some local authorities were not very conversant with what housing involved and therefore neglected it. Only the revenue collection from housing was important...." (pp. 48 & 50).

The problem, therefore, of improving NHC/local authority coordination is much broader than that seen in this project. It is recommended, therefore, that this aspect of "institution building be promoted and advanced by any future USAID project with local authorities if the basic agreements are handled through a central government agency.

Future projects should also emphasize ways that local authorities which lack development expertise can still participate and advise in the development process.

There was a second development process (styled category "C") which was entirely different from the foregoing. Under this procedure municipalities were allowed to proceed themselves with minimal input from the NHC. In fact NHC control was limited to inspection of the work and review powers if a "change order" increased the agreed upon price in excess of KShs 2,000/. Nevertheless, the design, sales price, buyer selection criteria must all adhere to the guidelines jointly agreed to by NHC/USAID.

The Councils accepting this method tended to be the principal urban areas (Mombasa, Kisumu, and Nakuru) - the 2nd, 3rd and 4th largest towns in the country). These councils felt they had large, competent staffs and were very jealous of their prerogatives vis-a-vis the Central Government and its agencies (such as the NHC). The correspondence between these councils and the NHC bristles with this jealousy.

However, local control as demonstrated by the Mombasa (two sites) and Kisumu projects did not succeed. Extensive delays and enormous cost escalations put these 3 sites in a category by themselves (indeed removing these projects would markedly improve the overall averages of all other sites.) What went wrong with those projects developed under category "C"?

There are a variety of possible answers. Extensive planning activities began in both Mombasa and Kisumu in early 1976 for the Second Kenyan Urban Project funded by the World Bank. These activities have continued to the present and have undoubtedly occupied these councils to a large extent. The IBRD projects are attractive to the particular towns because of the much larger amount of financing involved which includes a range of housing and community development facilities. It seems that the AID schemes took a second place and other NHC schemes then took an even more remote 3rd place in order of importance.

Further, Mombasa demanded (and eventually got) an entirely different (larger and more expensive) house type design which they felt was more appropriate to their community (the sales resistance to the standard coastal design in the other coastal town of Malindi was used to support their position). This individual approach, however, consumed vast amounts of time which inflation (13% annually) made most detrimental.

The competence of the various local councils proceeding under the "C" method were questioned on a number of occasions by both NHC and AID.

In retrospect, it is possible that administrative chaos might have been lessened if category C towns had been able to contract directly with USAID (thus eliminating NHC). Special Treasury and administrative approvals may have been necessary for such a course of action. Mombasa in particular might have benefitted from such an approach since 20% of the money was originally allocated to that town.

7.5.7. Problems Encountered

Project 004 has been characterized by its many problems ranging from design changes over allocation to cost recovery.

The main feature of these problems is their contribution to delays. Average project delay (recorded on chart no. 3 of the annex) was 18 months, while individual projects were delayed up to 30 months. This delay meant that construction interest and NHC administrative costs continued to increase and add to the very substantial burden on each project. It is instructive to note that the one site which was completed in nearly timely fashion (Nanyuki), records a large price decrease for the 1 room unit and only a moderate increase for the 2 room unit.

The ratio of completed housing units was 30:70 one to two room units (compared with Umoja's concentration on lower cost one room units in the ratio of 76:20:05 - 1's, 2's, and 3's). The final average selling price of project 004 was Shs 32,380 and 46,120 respectively. In this regard it is useful to recall that the selling price for the 3 room unit in Umoja was KShs 39,030 - the present estimated selling price for a two room unit at Kisauni in Mombasa is approximately KShs 70,000 (see chart no. 5 for monthly repayment amounts).

Reasons for the delays are varied. Delay was caused by the other national government agencies (Physical Planning Department and Commissioner of Lands) which had not been involved in project preparation but whose approval was necessary. The NHC Deputy General Manager addressed this question himself in December, 1976:

"There are several reasons for the delay. The first was in connection with the approval of designs by USAID. Although all the agreements were completed on 3rd June, 1975, it was not until the 26th November, 1975 that sketch designs of the houses were approved by representatives of USAID who came to Nairobi for that purpose. Since then there have been even greater delays in receiving site layouts from the local councils and government departments, i.e. the Physical Planning Department, and the allotment of land by the Commissioner of Lands, delays for which to some extent, the Corporation must accept responsibility."

Delay was also apparently caused by the problems of running a 13 site job (2 sites in Mombasa). An internal USAID evaluation made in March 1977 had this assessment of the delay:

"Delay is inherent in the design of the Project. The NHC is the chief administrator and borrower. As such, it lends money to 12 city councils for construction and relies on the councils for administrative support, plan approval, site location, contractor supervision, and collection of mortgage payments. The 12 councils are located in 6 different provinces; each province has to approve government activity in its area. Province approval adds another time-consuming layer to an already cumbersome approval process."

NHC has been lending for projects all over the country for a long time but it may be that for this project, NHC was too much involved. If NHC in the future is to administer large numbers of projects it has to find a way of reducing its administrative burdens by delegating more responsibility to the local councils. This overburden on the NHC seems to be the underlying reason for the conclusion of a consultant for the US National Savings

and Loan League who placed responsibility for the delay on the NHC:

"The NHC seems to have continuous difficulties with keeping the project costs and unit selling prices within the income range of the target population.... NHC seems to readily accept the events as they come without making any effort to change them to the benefit of the program."

Delay also appears to have been caused by the shortage of manpower in Nairobi RHUDO office during the critical start-up period. The NHC played a somewhat passive role during the development and implementation of the project thus requiring a substantial amount of AID time to get the project underway.

It was not until 1977 that USAID stationed a second staff member to Nairobi. The 3 years that had elapsed during which time the office was understaffed, however, were critical ones for this project since project 004 required RHUDO to play an activist role to spur NHC onwards. This style of operations was contrary to the one which worked most successfully in project 003. In this, as in many other ways, project 003 and 004 were mirror opposites of each other. It is stretching the limits of capacity to believe that one man could successfully monitor both projects (plus the housing activities in half a dozen other countries). AID had apparently recognized this situation early but had been unable to take the necessary action.

Significant problems of effective project management were encountered throughout the development process. Special features of design, construction, and management supervision all became necessary - yet none of these special problems seems to have been envisioned at the project's outset.

RHUDO's role in monitoring the NHC, the implementing agency, had to be re-defined as the project progressed. Ordinarily, "project management" would be left to the implementing agency, and RHUDO would be satisfied with the designation of a "Project Director". Yet here events forced RHUDO to take a more and more active role in defining the type of project management that they considered acceptable.

A threshold problem which assumed great importance in the first 18 months of the project's life was the role of two central government agencies: the Physical Planning Department and the Commissioner of Lands. RHUDO had not really had prior experience with either agency since Nairobi (location of projects 001 and 003) has the power to plan its own city area. All other areas, however, have to receive the approval of the Physical Planning Department when they propose development schemes (a "Part Development Plan" - a type of subdivision plan, must be submitted to the Physical Planning Department to ensure that it is in harmony with the overall town development plan). Further, the sub-division of land owned by the Central Government must be approved by the Commissioner of Lands. These two sets of approvals became intensely time consuming.

In future, these two agencies should be involved with the MHSS and the Treasury in the initial planning of any project,

and their agreement to some type of "fast track" processing would seem essential before AID consents to extend a loan.

Project management suffered through some ambiguity as to who was in control of the project at the NHC. A "Project Director" was named by the Chief Architect in early 1976, but financial matters were totally controlled by the Deputy General Manager. The division of responsibilities seems very unfortunate since they were so totally interrelated; the delays in construction affecting financial calculations. This situation was never finally resolved.

Site management was equally troubled; RHUDO wrote numerous letters to NHC stating that site management was being done on a part time basis by NHC officers who had many other projects to oversee. Consequently, RHUDO retained the services of a local architect to advise it on project progress but this service was advisory only. Direct approach had to be through the NHC.

In future project management at both the central (NHC) and site level should be clearly spelled out in the Implementation Agreements. RHUDO should be empowered to implement immediate corrective action if it is found that inadequate project management is leading to development slow-downs.

7.5.8. Achievement of Objectives

Chart no. 4 demonstrates the remarkable variations in demand (as measured by the number of applications submitted) for the houses in project 004 in different towns. An official of the NHC stated that it was his organisation which selected the different towns for inclusion in this project and worked out the number of housing units allocated. This aspect of the project was completed during 1974 while most houses did not reach the market until 1978 and 1979. Conditions may well have changed during the 5 years that elapsed between the time that the NHC estimated the need and the point at which the units were offered for sale. It is possible, however, that the NHC estimates of need were insufficient from the beginning. No attempt was made to assess the market conditions, i.e. demand as opposed to need for housing in the different towns.

Other factors influencing sales: in Embu (where three separate application periods were necessary to stimulate demand) the NHC managed to compete with itself. In May 1978, 190 persons were allocated site and service plots in Embu; the NHC "progress report" for December, 1978 records the completion of "Embu Rental Scheme Number 4". It seems probable that in this way the NHC managed to skim off both the top and bottom of the market which would have existed for the USAID houses.

In Malindi there was such total sales resistance that the project was withdrawn from the AID package and converted into a rental scheme. Here NHC was also competing with itself - a sizable site and service scheme was opened almost simultaneously with the tenant purchase site. Unlike Embu, however, their was little demand for the NHC site and service scheme either. It is instructive that the Mombasa town council rejected the "coastal design" as inappropriate for their area - they found it too small. A study of the Malindi project and

the sales resistance encountered was prepared by the Housing Research and Development Unit of the University of Nairobi at the request of and under contract to RHUDO. The Report concludes that the house type was incompatible with traditional housing in the area in that it was smaller and more costly than market alternatives. Also, Malindi is a typical tourist town with a very large number of transitional workers who prefer to rent rather than to buy.

In contrast to these two sites, strong demand for 2 room units was registered in most other areas in the country. The rental possibilities favorably influenced the market for this type of house by reducing the monthly payment and people obviously found it cheaper to buy a 2-roomed house than to take a one-roomed unit and pay for the cost of adding another room. In retrospect it would seem that some sort of market study should have been made in the 12 towns prior to this project being funded. On the other hand, if 5 years were to regularly elapse between such a study and marketing, its value would be slight. One would have expected the NHC to have been aware of the cultural differences existing at the coast and to have separated the lakes and coastal house types. One would also have expected that the NHC would have organized their projects so that they didn't compete with one another.

Were the institutional goals (to strengthen the NHC's ability to implement low income, low cost housing programs) of this project realized?

RHUDO believes that despite the problems, substantially they were in large degree.

"On balance, and in spite of the slower rate of construction progress in this project, there have been positive results flowing directly and indirectly from the project. The NHC appears to be firmly committed through this project and through its site and service activities to shelter solutions catering for lower income households." (Sept., 1977) But the main benefit may still be that there is always a tendency to overestimate institutional capacities in the public sector.

Capacity problems are often blamed on staff shortages. However real these shortages may be they reflect a lack of understanding at all levels including central government that new people of the right calibre can only be attracted by competitive wages - unless one resorts to foreign technical assistance, or decides to give some tasks "out of the house."

A consultant from the U.S. Savings and Loan Industry disagreed with the USAID conclusions in that he did not think that NHC was enthusiastic "about housing units limited to the population below the 50th percentile".

There is something quite remarkable about such a disagreement since this has been GOK policy throughout all the 1974-78 Plan period that the NHC's primary mission should be addressing

the low income housing problem. The fact that a debate is possible at all at the end of the Plan period as to whether or not the NHC ever really adopted this GOK policy is symptomatic of the problem. Since the World Bank has funded a complete review of NHC operations as part of the Third Urban Project, this report is not the place for further investigation, but the team supports the view that objectives of project 004 on the whole were not achieved.

Project 004 raises fundamental questions about the best way to deliver housing programs to secondary cities and towns. This project attempted to combine centralized delivery (through the NHC) with selected local control for larger municipalities (through development category "C"). In principle this approach seems commendable, but in practise it became unwieldy.

The NHC had great difficulty managing a scattered site project; yet surely in their second decade of existence, the NHC should have been aware of potential problems from previous experience. Local coordination was weak in the "A" schemes, and local control in the "C" schemes led to less (rather than increased) efficiency.

Institution-building can only come about through the actions of the local institutions themselves. Institution building may require infusions of AID financed technical assistance. Admitting the necessity for such technical assistance, however, may be politically impossible for these institutions. Whether RHUDO should "force" technical assistance on a local institution which has not requested it (and indeed may not want it), is outside the scope of this report. If a local institution fails through its own mistakes to implement a program in a proper manner, does RHUDO have a responsibility to save it from itself?

It was the Central Government (the Treasury) which had designated the NHC as the lender for this portion of the Kenya Housing Guaranty Program. Corrective measures therefore, should stem also from the Central Government.

7.5.9. Present State of the Project

Eight of the thirteen sites were visited and interviews held with Council officials, local residents or contractors' representatives. The sites were at Thika, Embu, Nanyuki, Likoni, Kisauni, Malindi and Kisumu. The list includes at least one site from each Province. It is not feasible to reproduce the detailed findings from each site,instead, we will discuss them briefly here under the following headings:

Target Population.

The general feeling among Council officials is that the target population was unilaterally determined by NHC without consulting the local councils. No market analyses had been carried out. The result was that the houses were

too expensive e.g. at Malindi, while in some cases the project had to be reduced in scope or deferred because of inadequate demand. For instance at Kisumu there are proposals to defer phase 4 of the project to a later date, while at Kisauni only 84 houses out of the original 182 are to be built because of lack of finance and inadequate demand.

Cost.

In many of the towns visited the officials, commenting in a personal capacity, thought the houses were too expensive considering the amount of accommodation offered and the standard of finishes. At the Coast one could purchase or build a spacious four roomed traditional house for the Shs 45,000/ or Shs 66,000/ payable for a NHC/AID house at Malindi and Mombasa respectively. In towns where there is a shortage of serviced sites the land may have been a significant consideration in the individual decision to invest in an AID financed house anyway.

Location.

It was difficult to understand the conditions and circumstances that influenced the choice of some of the sites. Many of the sites were far from town and therefore isolated (e.g. Nanyuki, Thika and Kericho) and far from existing community facilities. Access to such facilities is often poor (Nanyuki, Kericho). At Kericho the site is so steep that serious surface water drainage problems can be expected while the extension of some houses will prove difficult and costly because of the need to excavate and/or fill on steep grade. At Nanyuki the site chosen by the Council was rejected by NHC.

Some sites however, were well chosen, e.g. Likoni where a genuine attempt has been made to integrate the project with an existing rental scheme and ancillary community facilities, which are already of a high standard; more shop sites and a market site are provided within the project layout, while accessibility is also good. The Kisauni site is also equally well endowed. At Kisumu the hillside site commands a panoramic view of the textile factory and new brewery, both of them potential employers. The rocky terrain however may have added to construction costs; a similar condition existed at Likoni, where the coral is quite thick and high, making the digging of trenches, septic tanks and soakage pits rather expensive.

Densities are generally high in all the schemes, ranging from 300 to 400 persons per ha. In the smaller towns gross densities are much lower, since the blocks of houses are kept well apart with large open spaces in between. Both from the marketing and maintenance point of view it is better to increase individual plot sizes at the expense of public open spaces. Increasing the size of the front and back yards would affect servicing costs only marginally. Land scarcity in the small rural townships does not warrant such high densities yet.

Roads are mainly murram (or coral on the Coast). It is only Kisumu which has expressed an intention to build tarmac roads,

which is probably justifiable considering the gradient of the site. The maintenance of murram and coral roads will cause problems in future, since the Councils will not assume any responsibility for roads not made up to "adoptive standards". The law relating to street maintenance needs amending.

Sewers. While the Kisumu site will be connected to a public sewer, most other sites (Kisauni, Likoni, Malindi, Kericho) have group septic tanks, with each tank serving 20 - 30 houses. Such an arrangement can easily be modified to enable connection to a sewer when a public sewerage system is built.

Stormwater Drains consist of open channels, in some cases unlined (Nanyuki, Malindi). Open drains are invariably allowed to collect rubbish and soil.

Street Lighting is provided in some schemes (Likoni, Kisauni) but not in others. For security reasons this is an essential facility.

Landscaping is minimal. On some sites no effort was made to preserve existing trees, e.g. at Kisauni an elegant baobab was felled by the contractor because it happened to stand in the middle of a prospective plot. The layout should have been changed. The Malindi site is also bare, while the surrounding area is rich in coconut and mango trees. Most sites are too new to show any positive signs of a landscaping effort.

House Design is a controversial issue among local people -- experts and laymen alike. Local officials were not previously consulted by NHC. Complaints center around:

- size of rooms
- room facing toilet
- poor internal circulation
- kitchen too small
- lack of ceiling
- poor sound insulation
- fittings e.g. locks and fasteners are cheap
- lack of security measures, e.g. fencing, burglar proofing.

At Mombasa the then Council rejected the NHC lowland design and developed their own which is slightly larger with a minimum of 2 rooms. We understand that great pains were taken to make sure that the design was acceptable to the local people. An architect explained the design concept to prospective applicants with the help of drawings and a model.

Extensions. Work on extensions has started on some sites, e.g. Thika. But there is a tendency for allottees to extend first and move in later. Type plans are not always available (Thika).

Project Management has suffered in practically all towns due to poor communications and lack of understanding between NHC and the respective local officials, many of whom feel snubbed by the Corporation. At Mombasa the design question was in abeyance for nearly three years due mainly to a dispute between the Council and NHC. Clearly, housing is still a very political "thing" which will be used and misused for selfish reasons by local councillors.

Allocations. Criteria and procedures for allocation caused a good deal of disagreement between the councils and NHC. In Nanyuki the Council annulled the first allocation done unilaterally by NHC because some of the allottees, who were all known to the Councillors and officials, were ineligible high income earners. In Embu there were fewer applicants than houses and a second ballot was necessary. At Likoni 300 people applied for 124 houses. At Thika, only a fifth of the houses have been occupied to date (Feb. 1979), although they have all been allocated since Dec. The Malindi scheme has been converted to rental housing because of lack of demand.

Maintenance. Inadequate maintenance first tends to show itself in the open drains and the public open spaces. The roads come next. The cause generally cited is paucity of funds on the part of the Council. The team does not accept this explanation.

7.5.10. Conclusions

Whereas it is generally recognized that the progress of Project 004 has been far from satisfactory there is no consensus of opinion as to the root cause of this situation. There may be a variety of reasons, many of which have been discussed above. There is little doubt however, that one fundamental deficiency has been the lack of strong highly motivated and talented leadership of the type that existed for Umoja. The capacity to innovate and deal effectively with uncertainties and crises has been limited, which in itself was caused by the absence of a clear cut split of responsibilities and rewards between the NHC and the local authorities. It was assumed that the main missing ingredient for a successful project was money. That assumption has turned out to be wrong. Other inputs, especially organisational, are equally or even more important. What lessons then could one draw from the 004 experience?

1. A project on 13 different sites, simulatneously stretching from one end of the country to another, raises special problems of communication, coordination, supervision and catering to the local social and political needs of individual communities, particularly when it is centrally conceived, planned, and managed.

2. A thorough market survey and feasibility study for each town is absolutely essential. It is not enough to estimate income distribution figures and pick an arbitrary cut-off point based on policy considerations.

3. Local professional expertise in the individual communities could be tapped to advantage. For instance an estate agent with local

experience and knowledge could have a better insight into housing demand than an expensive consultant from Nairobi or Washington.

4. The assessment of effective housing demand needs to be a continuous process. An effective mechanism for monitoring the market situation has to be devised.

5. Town size is no indicator of either housing demand or project implementation capability. The selection of towns for investment purposes needs to take a wide range of factors into account such as growth potential, administrative capacity, and availability of technical and social infrastructure.

6. Finding a suitable site is not easy. Local authorities should therefore be given all the assistance they need in site identification and land acquisition. AID will in future have to get each site approved by their own planner.

7. AID will also have to assist the small local authorities in getting the necessary approvals from the Commissioner of Lands and Director of Physical Planning. Development can be delayed because of minor technicalities.

8. Participation by the local authority, as an equal of USAID or NHC, is essential for project success. It should be possible to modify the loan documents to make a Council signatory to the agreement and make it a responsible partner both in the preparation, execution and administration of the project.

9. The Implementation Agreement should spell out the project management responsibilities of the local and national recipients as well as of the donor agency.

10. A strong and well-staffed project management team is essential for the implementing agency; it should in each case be composed of a variety of technical disciplines. The exact composition, size and location of the teams will be determined by the nature of future projects.

11. A financial penalty for delay is helpful but not very effective since the interest rate is quite low and the costs are passed on to the purchaser. This should be permitted only within very narrow and fixed limits.

12. Periodic high level review meetings, involving Town Clerks and/or Engineers, NHC management, USAID representatives, the Treasury and Ministry (Housing and Local Government) representatives would have helped to smoothen implementation of individual projects.

13. Blanket design solutions are risky and should be avoided unless a specific model has proved particularly successful or there are certain strong reasons based on mass production of components. The use of a standard design for all the highland towns does not seem to have yielded any special benefits.

14. The concept of the expandable dwelling would be more successful if the necessary technical support, e.g. free type plans and technical descriptions were available.

15. Housing management capability varies from town to town. A manual of techniques and procedures, if prepared, will prove extremely useful to local authority staff throughout the nation.

16. The standard of infrastructure maintenance is fairly low and little improvement can be expected unless there is an inducement to local government in the form, for instance, of extra fund allocation for new schemes. We have refrained from venturing into the area of land taxation, ground rents and other forms of revenue raising, which could be used to generate funds for new construction, administration and maintenance.

17. Some form of "low start" mortgage loan should be offered to facilitate the sale of the units to the target group.

18. Pending a review of the NHC functions and structure, its role should be better defined and its efficiency strengthened in the overall task of providing housing to the nation.

19. The Ministry of Housing and Social Services must of necessity play a strong coordinating role in the development of new projects. MHSS is the best placed institution to assure compliance with policy and programs, to press for land and for regional and urban plans, to provide statistical information and to evaluate finance arrangements and other resource availability.

20. As a general recommendation, which has particular relevance in towns with a less sophisticated housing market, any new public housing scheme should include a "public relations" or "educational" element. The purpose of explaining the application procedures, the advantages of ownership, the meaning of interest payments and the possibilities for expansion and capital appreciation will overcome much misunderstanding and distance among potential buyers among the lower income groups.

CHART #1

Jan 29, 1979 R

NATIONAL HOUSING CORPORATION
USAID TENANT PURCHASE HOUSING SCHEMES
UNIT & PRICE COMPARISON

PLACE	HABITABLE ROOMS ONE ROOM No. Nov 75	March 77	Final	Change	Each Unit KL* Nov 75	March 77	Final (Present Est)	Change KL	Change %
Nakuru	40	40	40	-	1,468	1,123	1,600	+132	9%
Thika	32	32	34	+2	1,468	1,123	1,500	+32	2%
Eldoret	31	31	31	-	1,498	1,088	1,400	-98	-7%
Kitale	21	21	22	+1	1,505	1,160	1,600	+95	6%
Nyeri	18	18	18	-	1,490	1,042	1,600	+110	7%
Meru	16	16	16	-	1,612	1,245	1,800	+188	12%
Embu	22	22	23	+1	1,505	1,200	1,825	+320	21%
Kericho	17	17	17	-	1,540	1,192	1,585	+45	3%
Nanyuki	12	12	12	-	1,540	1,193	1,285	-255	-17%
Mombasa** (Likoni)	75	75	-	-75	1,468	1,095	- Only 2 room units built		
Kisumu	80	80	71	-9	1,487	1,167	2,000	+513	35%
Malindi	43	43	-	-43	1,576	1,463	- Only 2 room units built		
Total 1 room units:			284	(-123)					

AVERAGE COSTS: Estimated: 1,513 (KShs 30,260) Final: 1,619 (KShs 32,380) Change: +106 % Change: +7%

*Unit price represents "selling price" (including 10% deposit); the USAID mortgage amount is 90% of this figure.

**No one room units ever planned for Kisauni Project, Mombasa.

Jan 29, 1979 R

CHART #2

NATIONAL HOUSING CORPORATION
USAID TENANT PURCHASE HOUSING SCHEMES
UNIT & PRICE COMPARISON

PLACE	HABITABLE ROOMS TWO ROOMS No. Nov 75	March 77	Final	Change	Each Unit KE * Nov 75	March 77	Final (Present Est)	Change KE	Change %
Nakuru	80	80	80	-	1,700	1,872	2,100	+400	24%
Thika	64	64	66	+2	1,700	1,872	1,900	+200	12%
Eldoret	63	63	65	+2	1,733	1,814	1,850	+117	7%
Kitale	38	38	38	-	1,742	1,933	2,100	+358	21%
Nyeri	41	41	41	-	1,725	1,738	2,050	+ 325	19%
Meru	28	28	28	-	1,866	2,076	2,400	+ 534	29%
Embu	26	26	26	-	1,742	2,000	2,300	+558	32%
Kericho	29	29	31	+2	1,783	1,987	2,024	+241	14%
Nanyuki	26	26	26	-	1,783	1,988	2,080	+297	17%
Mombasa (Likoni)	231	231	124	(-107)	1,700	1,821	3,300	+1600	94%
(Kisauni)	107	107	84	-23	1,700	1,821	3,511	+1811	107%
Kisumu	125	125	109	-16	1,722	1,931	2,520	+798	46%
Malindi	8	51	-	-8	1,824	2,434	1,840	+16**	-
Total 2 room units			717	(-41)					

Average Costs: Estimated: 1,748 (KShs. 34,960) Final 2,306 (KSHs 46,120) Change: +558 % Change: +32%

*Unit price represents "selling price" (including 10% deposit); the USAID mortgage amount is 90% of this figure.

**Project withdrawn; costs allocated in such a way as to reduce total cost but still not sufficient buyer interest.

Jan 29, 1979 R

CHART #3

NATIONAL HOUSING CORPORATION
USAID TENANT PURCHASE HOUSING SCHEMES
CONSTRUCTION SCHEDULE

Place	Remoteness Factor	Original Estimated Construction (March 1975) Completion	Actual or Present Estimated Construction Start	Completion	Delay (Months)
Nakuru	2½%	July 1, 1977	July 1978	July 1979 (E)	24
Thika	2½%	Jan. 1, 1977	June 1977	September 1978	21
Eldoret	4½%	July 1, 1977	March 1977	February 1978	8
Kitale	5%	July 1, 1977	October 1977	March 1979 (E)	21
Nyeri	4%	July 1, 1977	April 1977	March 1978	9
Meru	12½%	Jan. 1, 1977	Dec. 1978	Sept. 1979 (E)	21
Embu	5%	July 1, 1977	April 1977	June 15, 1978	11½
Kericho	7½%	April 1, 1977	June 1977	Jan. 1979 (E)	22
Nanyuki	7½%	July 1, 1977	Nov. 1976	September 1, 1977	2
Mombasa	2½%				
(Likoni)		Jan. 1, 1978[1]	Nov. 1978	December 1979 (E)	24
(Kisauni)		Jan. 1, 1978	July 1979 (E)	June 1980 (E)	30
Kisumu	3.3/4%	Jan. 1, 1978	Oct. 1978	October 1979 (E)	22
Malindi	10%	Dec. 1, 1976	March 1977	February 1978	15
				AVERAGE DELAY	18 MONTHS

Feb. 5, 1979

CHART #4

NATIONAL HOUSING CORPORATION
USAID TENANT PURCHASE HOUSING SCHEMES
ALLOCATION PROCEDURES

Place	Date(s) Application Solicited	# Apps. 1 room	# 1 room Units	# Apps. 2 Room	#2 Room Units	Date(s) of Allocation	Date of Plot Occupancy
Nakuru	August 1978	122	40	366	80	October 1978	July 1979 (E)
Thika	April 1978	36	34	160	66	July 1978	Dec. 1978
Eldoret	(1) Dec. 1977 (2) April 1978	9	31	100	65	(1) Feb. 1978: 54 (2) July 1978: rest	March 1978 August 1978
Kitale	May 1978	15	22	48	38	October 1978*	March 1979 (E)
Nyeri	April 1978	97	18	292	41	September 1978	October 1978
Meru	(No date set yet)	-	16	-	28	-	-
Embu	(1) March 1978 (2) May 1978 (3) November 1978	5	23	44	26	(1)September 1978:26	November 1978
Kericho	July 1978	38	17	100	31	September 1978	
Nanyuki	March 1977	77(total)	12	77(total)	26	March 1978	April 1978
Mombasa (Likoni)	October 1978	-	-	137	124	January 1979	January 1980 (E)
(Kisauni)	(No date set yet)	-	-	-	84	-	-
Kisumu	December 1978	300(total)	71	300(total)	109	-	-
Malindi	(1) September 1977 (2) November 1977	-	-	19	51	Project withdrawn due to lack of demand.	

*Irregularities noted during Kitale allocation; Council refused to accept NHC's upper income limit.

Feb 2, 1979 R

CHART #5

NATIONAL HOUSING CORPORATION
USAID TENANT PURCHASE HOUSING SCHEMES
MONTHLY PAYMENTS

Place	Eligibility Incomes* (KShs. per Month)	Monthly Payments (P & I)(KShs.) 1 Room Units	2 Room Units	
Nakuru	750/-(1 room), 1,000/- (2 rooms) - 1,650/-	260/-	342/-	Higher deposits encouraged to lower payments.
Thika	750/-(1 room), 900/- (2 room) - 1,315/-	245/-	301/-	Households may devote 35% income to payments.
Eldoret	950/- - 1,250/-	228/-	301/-	
Kitale	800/- (1 room), 1,050/- (2 room) - 1,400/-	260/-	342/-	Households may devote 35% income to payments.
Nyeri	750/- - 1,400/-	264/-	337/-	15% price increase after applications given.
Meru	800/- - 1,800/-	293/-	390/-	
Embu	850/- 2,000/-**	297/-	374/-	10% price increase after applications given.
Kericho	800/- - 1,500/-	260/-	344/-	
Nanyuki	300/- - 700/- (1 room) 500/- - 1,000/- (2 rooms)	211/-	340/-	
Mombasa (Likoni)	1,200/- - 1,800/-	-	545/-	Approximate figure, final price not determined
(Kisauni)	(no data at present)	-	-	
Kisumu	725/- - 1,600/-	325/-	410/-	Higher deposits encouraged to lower payments
Malindi	800 - 1,000	-	325*	Project withdrawn due to lack of demand.
	AVERAGE PAYMENTS:	264/-	363/-	

*Maximum monthly incomes are set so as to "equal" the town's "median income". In most cases the figure represents the AID/NHC estimate of 1978 median income. The usual computation method was multiplying the Real Estate Research Study Nairobi median income by a differential factor said to represent the reduced median income of the smaller towns.

**Due to insufficient response there were 3 applications periods at Embu. During this process the selling price was increased nearly 10%. The maximum income limit was then raised (presumably above median).

7.6. LESSONS LEARNED

Implementation of large housing projects in Kenya as in many other developing countries often assumes the existence of a policy and a machinery which can accommodate these projects as a matter of procedure, provided, of course, that funds are available and that the projects are in line with stated policy.

In making this assumption a number of constraints are easily overlooked, constraints which can become detremental to the projects themselves or to the objectives the projects are intended to serve. The approach in the following review of "lessons learned" will be to highlight some of the very real and practical difficulties encountered in the course of implementing the USAID projects in Kenya. The object of the exercise is to improve on future projects from concept to construction and beyond. In the process of this analysis lessons learned from other major projects such as those sponsored by IBRD and CDC will be incorporated.

7.6.1. Nature of Projects

There is no question that housing needs for Kenya are virtually insatiable in the forseeable future if UN standards for decent housing are applied. But even the effective demand for housing (i.e. need expressed in terms of purchasing power) is very considerable at all levels of income and for all types of housing. This fact has been demonstrated adequately by the number of applications submitted for many different housing schemes and the prices obtained. The new Development Plan's chapter on housing states very clearly that the only way to cope with the high price of housing is to build more. This statement recognizes the ineffectiveness of rent control and implies that the inflated prices are caused more by surplus demand than by the increasing cost of construction. This is another fact which recent housing projects have verified.

During the last six to eight years a decisive move has been made on the part of the public sector to develop housing projects for the lower income groups. This move undoubtedly came about partly through the influence of major foreign investors, in particular the World Bank and USAID. Not only did these projects conform more closely to stated housing policy but they supported procedures and practices which formerly were sorely missing. But these two major sources of funds were made available only to public sector institutions and therefore little experience was gained from, and little influence exerted on, the much larger private sector housing market. The pros and cons of this approach can be found in 7.6.5. where institutional arrangements will be discussed in more detail.

For the purpose of this sub-chapter, the type of projects to be built and where they should be located is more important than who executes them. It is often said that only through the public sector can a lender or donor agency assure compliance with policy. This is not so in Kenya, where the opposite could equally be maintained. Thus, to build where the need is greatest,

or is likely soon to be, and to provide the type of housing most in demand by the lowest income groups has always been a trade mark of the private sector. Controls of standards and densities still need to be enforced and certain "strings" can and should be attached to any major investment. All major lenders and donors have experienced that conditions for making money available on favourable terms will be accepted provided these conditions are in support of declared policy and leave a reasonable margin to the implementor for administration.

A few lessons have been learned as to the type of housing units needed. It appears that in the urban areas the larger units have been greatly favoured over the smaller ones. The larger units are relatively cheaper to build and part of their attractiveness is the demonstrated capacity to create income for their owners. Additional reasons are the severe shortage of housing for the middle income groups as well as the poor and the fact that urban households are less willing than their rural counterparts to engage in self-help building for reasons such as lack of skills and time plus higher building norms. Significant also is the fact that even very low income families have access to funds to pay the deposit for a larger house. They will be able to make the regular repayments,once ownership is assured, by generating extra income from sub-letting.

This latter point is illustrated by the rents charged for houses in Umoja and Dandora, or for that matter in BuruBuru, compared with loan repayments for the same units. But, it is said,"larger units cost more, hence fewer units for the same money!" This tantology has become part of the paradigm that poor people can only afford poor housing.

Two general comments can be made at this stage:

1. A given housing situation is not a static phenomenon; neigher is, indeed, a housing project. It should therefore be recognized that as new housing is built assets are created which can generate the additional resources for expansion of the supply of new housing.

2. The main reason people are poor is that they have very little money, -now. If income opportunities are created together with the provision of houses (employment and sub-letting) then it becomes clear that future income rather than present income should be used to calculate affordability.

Although everybody concerned with housing projects proclaims that housing projects should never be considered in isolation, it has been the experience with more than one of the major schemes in Nairobi and with practically all schemes in other towns that various community facilities have not been available when the houses were ready for occupation. The same can be said for the provision of, or easy access to, employment places and transport to and from the main business district. In some cases these facilities were planned, but were simply behind in implementation and not necessarily for lack of financing. In some cases they were even forgotten. These

components are so obviously important in housing projects that we shall turn to other less obvious, but nonetheless important aspects.

In Umoja, for instance, the proximity of an administration office which would look after such matters as loan repayments maintenance, community organisation and self-help construction is sorely needed. A very poor collection record against tenant-purchase agreements makes this abundantly clear particularly when the situation at Dandora, where there is such an office, is used for comparison.

In both Dandora and Umoja the landscaping has been neglected. This item is particularly important in very large, dense schemes of a rather uniform character where the immediate environment becomes an integral part of the living space. Both of these provisions can still be remedied, but would be easier to deal with and would serve a function right from the start of the project.

The choice of the sites and lay-outs have apparently been given less attention than the design of the individual units. Lessons learned in this respect speaks for much closer scrutiny of the location and nature of the site in order to enhance the quality and cost of the scheme. It is now also agreed by most planners that the size of plot and the total size of the scheme is significant for the attractiveness of the settlement and the satisfaction of those who live there. Dandora is a negative lesson in this respect. Umoja has taught planners lessons on lay-outs and traffic flows which in future projects are likely to save both space (funds) and lives.

Whereas both Dandora and Umoja (I and II) are too much of the same in one place the opposite could be said for the very small schemes in the provincial towns. Here economies of scale and enhancement of the community efforts would have been well served with a greater number of units, albeit of a kind more in demand.

Finally, only urban schemes have been attempted to date. Rural projects should not be neglected in the future. Elsewhere in this report some suggestions have been advanced which ought to be tried out. The need is as great even if the effective demand is not.

7.6.2. Target Population and Selection Procedures

The selection of beneficiaries for the schemes built for NCC as well as for the NHC has been one of the most criticized aspects of the AID projects. The criticism has been less in the case of Dandora project and almost absent in the case of the Buru Buru and the Akiba schemes.

The reasons are not difficult to see. For the Akiba and Buru Buru schemes the cost made low income families ineligible and the two institutions (essentially HFCK and EABS) selected allottees on the basis of credit-worthiness, but stressed owner-occupation and a savings record. For the Dandora scheme, eligible

applicants were interviewed and the list of allottees made public.

Given that target groups for AID projects will still have to be those with family incomes of less than the median, the total schemes, as opposed to the AID project component, should cater for a wider range of families. The selection is in any case going to be difficult to make absolutely fair. However, a few guiding principles can be suggested: First of all, applicants must know what and where the scheme is. They should not be aware of the selection criteria but be warned of the consequences of giving false or misleading information. Furthermore, after a preliminary sorting, all those eligible at this stage must be interviewed by a local social service agency not part of the local authority or other implementor. (NCCK, Social Service League, Service Clubs, Salvation Army, etc.) so that stated information is checked and supplementary information added. After this, a point system can be applied by the same service agency, details of which must have been approved by the investor, the Ministry of Housing and Social Services and the implementor. The selection then proceeds according to the point score of each application. In the process of interviewing the applicants, their choice of accommodation and the affordability question should be resolved. Selection on the basis of common bond has been discussed in connection with Housing Cooperatives (Chap. III, 4.2.9.) A computer was used in the past for making a random selection of eligible applicants for allocation, but fair criticism has been made of what was selected for the computer to process and of what happened to those that were randomly selected. Criticism of allocation has been more pronounced in the case of Umoja than of Dandora perhaps because screening of applicants was more thorough for Dandora.

One of the undisputable facts of Umoja, Dandora, Kimathi and other schemes is the high degree of sub-letting which takes place after a short while, i.e. sub-letting in part, which is permitted and total sub-letting which is not. Again, reality is not difficult to explain. Demand at all income levels and for all types of accommodation is so high in Nairobi that any dwelling provided at less than the market rent carries a subsidy in disguise which will be exploited according to the preference of the allottees. Some obviously did not place improved housing on top of their preferences list either because their present housing circumstances were satisfactory or they had more urgent needs for the cash they could obtain by sacrificing part or all of their new dwelling, - or they simply had moved away or changed their circumstances since the time of application.

One clear lesson learned in all of these public shelter schemes is that sub-letting is impossible to prevent. In private schemes it is no problem, because there is no restriction on sub-letting, although a higher rate of interest is normally charged on owners who do not occupy their dwelling, as opposed to owner-occupiers.

Rather than to try to enforce the unenforceable three other avenues can be pursued:

1. Sub-letting of any kind could be permitted, thus making it legal.

2. If sub-letting in part takes place a higher rate of interest will be applied (say 2% more p.a.) and if the owner turns absentee-landlord, he is in breach of contract and will have to settle his loan in full or, alternatively, subject himself to the full rent being collected by the implementors until the loan is paid off.

3. Allocation can be on the basis of affinity groups whose eligible members will be housed in close proximity to each other and where additional allocations will depend on conformity with the regulations including partial sub-letting, repayment performance, maintenance and consolidation of houses (addition of rooms, etc.)

The third alternative is the one best in tune with the "decentralization" approach advocated earlier and housing cooperative societies are one form well suited to play this role. Apart from their common bond which places a degree of community responsibility on each member they also are in a position to mobilize resources otherwise untapped. Determined efforts by the Dandora Project Department to organize such self-help groups, after allocation, has proven very worth while but may have taken no efforts and been even more successful if the allottees had already belonged to such groups.

7.6.3. Tendering Procedures

By all accounts the tendering for project HG 003 (NCC) and 004 (NHC) has been producing unsatisfactory results. In the case of 003 a retendering was necessary because of inadequate tendering material, still, standards had to be reduced to get the bid down to the quantity surveyors estimates. In the case of 004 the costs varied up to 100% for the same type of house depending on location and time of bid.

When projects are being prepared there is good reason for the agency providing assistance to assure itself that it is being done properly and to take precautions against all kinds of unprofessional and irregular practices. This is particularly true in the case of the public sector where such irregularities are very damaging to people's support and confidence. There is all the more reason to strengthen these procedures in the public sector now when the new leadership in Kenya has given high priority to the fight against any kind of nepotism, tribalism and corruption. In addition to the assistance-agency's vigilance, the involvement, at an early stage, of outside independent firms of architects, planners and quantity surveyors should be secured or, as explained later, the project could be given over at an earlier stage to a private institution for development in line with overall development plans. If this means providing also the technical infrastructure, as in the case of the Kenya Civil Servants Union scheme, there should be no objection. It is worth noting that this particular

scheme was prepared, tendered and executed by the KCS Union at the lowest cost per square metre of any recent housing project of its kind in Nairobi, - and not at the expense of quality. Reason: the KCSU is under very effective leadership and had to raise the funds themselves at commercial rates.

As in the case of Umoja it may be advantageous to tender for successive phases of new projects separately for the sake of competition. The same argument which applies to construction can be applied to the allocation of housing projects among private sector entities for development. It is natural and necessary for the AID regional office to be closely associated with this stage of the project so that guidance can be offered and more lessons learned.

7.6.4. Implementation

We have chosen to deal with implementation in terms of timing rather than with what is implemented and who the implementor is. This sub-chapter therefore addresses the capacity and cash-flow problems which any major scheme faces. The lessons to draw from the NHC project is that unless a date is set for the draw-down by the implementing agency of the funds to be loaned there is no pressure on the local authorities to have the plans ready by such a date and resources can lie idle for a long time. Another positive lesson can be drawn from the NCC project where the deposits paid by the allottees for the AID sponsored units were utilized to build another 100 units for the NCC. These extra units were of the same type and within the same scheme, but outside the AID project and therefore not subject to the same tendering and allocation procedures as the former. These two lessons combine to point to a procedure which should be followed in the future, not just for AID projects, but as a general policy, namely,

- to implement new projects in stages. The stages and/or components of the project need only be large enough to assure reasonable economies of scale in the construction phases;

- to offer components of the project for sale throughout the stages. Funds thus generated allow for expansion of the project, and/or reduce the amount of investment otherwise needed;

- to offer for sale first the least developed part of the project, possibly just part of the serviced land, to the highest bidder but with development clauses with respect to type and time.

- to encourage strongly by cash bonuses and other incentives the early repayment of any loan given to certain components of a project in order to increase cash flows and/or expand the project.

This approach is now being adopted for the Second Urban Project presently being implemented with World Bank support. However, a new AID project could go much further particularly with regard to the sale of housing units to groups such as housing cooperative societies which have the funds, or can raise them privately, to

make much larger deposits or buy the houses outright. The same principle can apply to blocks of flats which can either be sold to cooperatives or to individual landlords or conceivably even to individual owner-occupiers as condominiums. To spur this approach there is now a motion in Parliament to introduce legislation to sell publicly owned houses and flats to the sitting tenants.

As a final point on the implementation procedures it is suggested that one form of tendering for a project could be to include a part-finance clause in the contract, i.e. the contractors bidding for the tender of any component of the project shall be paid in step with the sale or allocation of the component. This will have the effect that completion will be sooner rather than later, and that bridging finance will be generated by the suppliers who are likely to be large firms with their own resources or access to credit. This has been tried out elsewhere in Africa with good results.

7.6.5. Institutional Arrangements

The new Development Plan does not favour public over privately built housing. It is therefore quite in line with national policy to assume that the institutions most efficient in providing shelter should do so. If any one lesson has been learned by all concerned in the implementation of large housing projects in Kenya it is that the public sector institutions have shown themselves to be inefficient both in terms of cost, timing and in achieving stated objectives. The private sector has made up for the deficits. It is equally true to say that the private sector has catered to the high, middle and low income groups alike although at the lower end of the income scale this effort has been unsatisfactory due mainly to lack of public sector planning, servicing and administration. The result is that densities and building standards in squatter settlements have continued to deteriorate while at the same time these uncontrolled settlements have grown dramatically in size and numbers.

The notion that the public sector should concentrate on only providing serviced sites or some variation such as a core unit and community facilities is therefore reasonable, but much more should be done in the way of land acquisition, preparation of long-term plans for all towns and growth centres. This task along with the obvious ones of formulating building regulations and enforcing them, technical assistance to local authorities, data collection, policy formulation and coordination of all entities in the housing development process in the wider sense ought to give the public sector enough to do. To add the extra burden of planning, designing, financing and executing its own housing projects and administering them for many years is not helping the public institutions but making matters worse.

In Kenya, fortunately, the private sector has this capacity. The projects developed by HFCK/CDC, AKIBA, the Kenya Civil Servants Union and others bear witness to this fact. Costwise and administratively they are more efficient as well. They

have shown themselves capable not only of administering long term external and local finance but to provide housing schemes including infrastructure, at very competitive prices.

The conclusion of the collective experience in this respect must be that to add to the total housing stock most effectively, and be in line with national objectives, large housing projects should be executed by private sector institutions of proven capability. At the same time the existing institutional framework in the public sector should be strengthened for what must be its primary task namely the provision of land and infrastructure.

The question of where new projects should be implemented cannot be divorced from availability of implementing capacity, but the projects under consideration hardly provide conclusive answers. Superficially it may seem that the two AID projects in Nairobi along with other projects referred to above, on the whole, have been successful whereas the projects implemented through NHC in provincial towns has presented a multitude of problems including lack of demand for the type of homes built at the price at which they were offered. The same can be said about the large NHC site-and-service schemes around the country, now being surveyed by the HRDU. However, two main reasons explain this state of affairs. One is that whereas the demand in Nairobi is so great that practically anything built will be occupied, the demand situation in the provincial towns is much more sensitive and requires a finer tuning to requirements and affordability. Secondly, the implementing agencies are different. NHC has not only a much more difficult role to play vis-a-vis several local authorities but it is also less able to devote the necessary number and quality of staff to supervise scattered project sites.

It should be emphasized that the role of NHC is primarily to allocate public funds to local authorities and to assist those councils which need it with technical assistance. This was not the way the HG project was implemented. Only one council in the end opted for the so-called C approach which was to do it themselves, simply because they all felt dictated to with respect to design, site selection, tendering and allocation. The lesson learned is therefore not that NHC should be left out of further AID projects but that it should serve its primary role and be a financial link between AID and the councils, the councils, in turn, being given a freer hand in choosing and implementing their own projects. All of this, naturally, in close consultation with the regional office of AID and a much greater involvement by the MHSS on policy matters.

The same suggestion advanced in the case of NCC applies to other councils, namely that in a large number of provincial towns private developers should be encouraged to be the implementors. This will ease the burden on the public administration which in turn should be strengthened to do the tasks of planning and administration. A closer study of the capabilities of some of these councils should be undertaken with a view to assist them in their primary functions, and at the same time identify the private sector entities which could, in each of these places, take over the role of implementor or of managing agent.

7.6.6. Cost Recovery

The suggestions on target population and selection procedures outlined in 7.6.2. relate closely to the cost recovery programme since the way in which families are allowed to repay the cost of their dwelling sets the major parameters for affordability and hence for defining the target group. Both of these instruments must be seen to be in line with government policy - in letter as in spirit - so that the overriding national objective can be met, namely to generate more income and to distribute incomes more evenly. It is therefore not enough to complete large numbers of housing units without assuring that those who benefit from them are also those who need them most and that the benefits they derive are not disproportionate to, or at the expense of, those not yet "lucky" enough to be allocated a house of their own.

Following from the previous section recovery of cost appears at different levels: ultimately from the occupants to the owners (who in some cases may be the same) then from the owners to the implementing agency to the contractors and others who provide land, labour, material, finance, administration and other services. As a matter of policy all of the AID schemes together with other recent schemes are in principle non-subsidized projects. This term implies that all costs connected with the projects are to be recovered from the beneficiaries. In Nairobi there are indeed good reasons for not subsidizing housing units as long as the cost recovery programme is in line with affordability. As pointed out before, however, housing is in fact heavily subsidized in all of the above projects because a subsidy is defined as the difference between the actual price and that which would prevail in a "free" market situation. Be that as it may, the so-called economic rent (price) which is charged is intended to cover at least all direct costs and is thus justified under the policy.

Before we proceed to suggest a closer approximation of selling price to the market price for dwelling units in the new housing projects it is necessary to state two basic observations: First, if any subsidy is provided under some disguise in connection with housing, it should be given to families rather than be tied to the actual physical provision of houses; this would not only be fairer but also eliminate the restriction on mobility and utilization of the existing housing stock which now prevails due to housing-tied subsidies. Secondly, experience has shown that allottees - and they still form only a small proportion of those entitled to better housing - will convert their privilege into cash to be used for other purposes. This demonstrates the fact that these people have different sets of priorities, and not to allow them to exercise this right is an interference with their personal liberties and with the maximization of benefits from their scarce resources.

It is sometimes said that the public sector should take the lead in lowering rents and that the private sector would have to follow because of the relatively large number of public housing units in urban areas. It is further maintained that the

public sector could do this because so many of their older units have been paid several times over. The argument is false. Experience shows that if the housing units are made available at lower cost than market prices the allottees will certainly obtain the difference from their sub-tenants and rents have thus not been reduced. The proportion of public to privately owned houses is of no consequence because the overall deficit is very great and rent control is ineffective. The latter part of the argument, namely that older housing units can be disposed of at no cost because they have already been paid dis-regards housing as a source of revenue (rent, tax or interest) which can be used, among other things, to produce more houses. The argument is narrowly valid, however, for rental units which produce a deficit due to high maintenance cost. These should be disposed of but at market prices to be paid over a number of years.

It has been established beyond dispute that affordability is a function of income, but, as already Engel and later Schwabe pointed out (1857) the percentage of income spent on housing goes down as income goes up. This means that to use an average rate of 20% - 25% of income across the board does injustice to all but a few in the middle and certainly to those in the target groups as defined hitherto. Data on rent propensities for low income groups in Nairobi (Jørgensen, 1970) and other metropolitan cities in developing countries is available but have so far not been applied here. An up to date review of local data should be undertaken before a cost recovery programme is designed for a new housing project.

Supplementing the old economists, Friedman, 100 years later, refined the data to show that not only current income, but income expectation influence expenditure on housing. In Kenya this aspect has a very real significance because as soon as a house is allocated the allottee's income jumps 100% or more in some cases. This fact has been taken into account in some very recent schemes (Umoja and Urban II) but only by allowing up to 20% to be added to current income. The private financial institutions have already learned the lesson and adds the full potential rental income. This approach obviously has consequences at both ends of the target group range. At the lower end more will now be eligible, and at the upper end some will not be. One way to accommodate this situation is simply to include and exclude families accordinaly, but since there is a severe shortage of housing also for the middle income groups this is hardly workable or fair. Instead, the repayment (cost recovery) terms should be different for different families, i.e. some should be paying back faster than others. Likewise, for very low income families who cannot sub-let (because they need all the space e.g. in a one roomed unit) and are thus without immediate income prospects could be offered a low-start repayment schedule, because they are likely to improve their earning capacity with time (due to such factors as seniority on the job, inflation and changing family patterns. Data available). The main objection to these differentiated cost recovery programmes is the administrative work involved. We maintain, however, that by keeping the

interest level constant and providing borrower as well as lender (allottee and administrator) with fixed schedules for each contract the administrative work is no less than at present. Where more work is required is in the selection and allocation stages where more fairness and individuality need to be introduced for other reasons as argued earlier on.

By adopting the above approach to cost recovery two aims have been catered to: (1) to charge nearer the market price for units sold (to generate more funds for housing) and (2) to reach lower down the income scale and making cost recovery fairer to everybody.

Whoever the implementor is, it is imperative that the increased cash flow and extra mobilization of resources is utilized for productive investment although not necessarily for housing, because if surplusses accrue only to the allottees it is a well established fact (data available) that consumption will be enhanced at the expense of new investments. This premise is one of the basic elements in a social cost-benefit analysis of any project, housing projects in particular.

Chapter III

HOUSING FINANCE IN KENYA

1.0. Introduction and Summary

1.1. Context of Study

This Study will of necessity touch on many of the same issues dealt with in separate reports on rural and urban housing. The nature of housing finance is such that it does not lend itself well to a rural/urban treatment, whereas it may usefully be seen in the light of where the money comes from, namely principally from two sources: the private and the public sector. The issues raised in the other reports will thus be highlighted and seen in a different perspective by a special treatment of housing finance in Kenya. Another reason for a separate report on housing finance is the fact that historically and institutionally development in the finance sector has been different from that of the physical provision of housing. In more ways than one this fact has been, and still is, crucial to the Kenya housing problem and has made it appear as if finance is the single most important constraint on implementing the government's housing policy.

1.2. Extent of Study

Placing the subject of housing in the context of finance forces one to place housing finance in the context of development of financial institutions in general, and, indeed, in the framework of the Kenya economy as a whole. Special emphasis here will be on the mobilization and allocation of resources. Via the financial infrastructure the study goes on to look more particularly at the institutional framework for housing finance, both public and private.

In the private sphere it is appropriate to investigate separately the formal institutions specializing in housing finance on the one hand, and the so called informal societies and associations on the other, which, together with the pure self-finance, still mobilize more than half of the funds that go into new and improvements of existing housing in Kenya.

Both the formal and informal sectors are very directly influenced in their capacity to generate funds for housing by the way the overall economy of the country performs and on public policy in many other sectors than finance or housing *per se*.

The next to the last part of this Study is therefore taken up by analyzing some of the constraints on the expansion of housing finance and some policy issues related to saving for, and investing in housing.

The last part of this Study lists the recommendations which emerge as being realistic and in line with the objectives of the government's policy.

1.3. Summary of Conclusions and Recommendations

1. Kenya's strategy for economic development since independence has achieved remarkable progress towards two of its three objectives (1) fast overall economic growth and (2) an accelerated Kenyanization of the economy. The shortfall in achieving the third objective of ensuring that the benefits of development are distributed equitably still manifests itself in such areas as job opportunities (income) housing and social services.

2. Compared with other developing countries Kenya has a high rate of savings in both the public and private sector. In 1977 aggregate savings reached 25% of GDP with households saving on the average 10% of personal disposable income. It is therefore difficult to raise domestic saving even higher, particularly in the light of an inflation which results in negative interest on normal deposit accounts. However, the public sector has an important role to play not only in identifying new areas of high tax propensity but of assisting new institutions or financial instruments to enter the market to tap household savings at much higher rates of interest, especially considering the high returns on housing investments.

3. The level of Kenya's financial infrastructure is high and consists of three main service systems: The Banking System, Non-bank Financial Institutions and Public Sector Financial Intermediaries. Although many foreign banks are now represented the British banking traditions prevail which is also true in the field of housing finance. This accounts for a very conservative and inflexible set of institutions in the private sector. Institutions which have served the housing field well in other countries at Kenya's level or development have not been introduced here. It is therefore RECOMMENDED that the public sector, possibly supported by outside technical assistance, introduce these new ventures, such as a rediscount facility for mortgages, cooperative housing finance agencies, low-short mortgage facilities, housing finance insurance.

4. Two encouraging signs with respect to mobilization of new resources have in more recent years made the need for institution-building obvious. One is the dramatic growth of savings and credit societies, the other is the even more impressive contributions made by all levels of society towards "Harambee"* projects. Together they demonstrate the ability and interest among private households to save for a specific purpose which will benefit them within a

---

* Harambee, Swahili for "pulling together" now a household word for projects relying on voluntary, collective support - in cash or kind - from the community which stands to benefit from them (schools, churches, water supply, etc.)

time frame of two to three years. Savings and credit societies have the advantage of a common bond and can therefore offer unsecured loans, albeit on fairly short term. Both of these "movements" are in need of technical assistance and administrative support.

5. We have defined the third category of institutions as public only if they are purely government operated, as opposed to those which are a combination of public and private, even if the government has a majority shareholding. In the public sector, then, there are financial intermediaries in the fields of agriculture, commerce, industry, tourism, and housing. On the whole they have a record of efficiency much less impressive than those with mixed participation. This is perhaps inevitable working,as they do,under legislation they did not conceive themselves. However, the government has just formed a committee to investigate some of them.

6. Although the commercial banks in Kenya are well represented across the country they have tended to favour urban areas with investments. They operate primarily on the basis of short-term commercial loans and are subject to the Central Bank's directives as to liquidity ratios and placement of long-term finance, interest rates etc. This has left them with virtually no role in the field of housing finance. However, they play the normal role in providing bridging finance and loans to the building materials and construction industry. One bank, the Kenya Commercial Bank, recently launched a scheme to promote "Farmers' Housing" but conditions are so strict that it has met with very limited response.

7. Among the non-bank financial institutions are the so-called hire-purchase houses. These are finance companies registered under the Finance Companies Act and therefore able to lend for a variety of purposes, including equity capital. They are characterized by offering the highest interest rates on the market to obtain funds while at the same time, of course, charging more than any other financial institution for loans. Generally they have been very successful. Housing finance institutions are RECOMMENDED to learn from these finance companies with regard to interest rate structure as well as security arrangements. Some of these finance companies are owned by commercial banks.

8. The Kenya Stock Exchange is relatively small but still significant in its potential for mobilizing additional resources for investment in the private sector. More recently the share index has risen dramatically reflecting not only investors' confidence but also high liquidity seeking a limited number of stocks. We therefore RECOMMEND that many more companies should be encouraged to "go public" perhaps by special legislation. It is also RECOMMENDED that the Stock Exchange should serve as a market for mortgages, as is the case in some other countries. This would have as an effect that the price of mortgage funds will be established commensurate with the expectations of returns on this kind of investment.

9. The role of the Central Bank has been indicated vis-a-vis the commercial banks. An additional function of the bank is to provide these banks and the government with credit facilities on short term. This service is not extended to non-bank financial institutions including those specializing in housing finance. We RECOMMEND that this situation be remedied and rediscount facilities offered to these institutions. This is also seen as a natural role for the Central Bank in assisting the government implement its housing policy with respect to the private sector, - as in the case in many other countries.

10. Central Government in Kenya is able to finance a good part of its development expenditure out of current income, 1/4 in 1978. This in itself is noteworthy. In addition it has had little trouble raising domestic funds at 7% - 8% interest by issuing government bonds and treasury bills. The main buyers of these instruments are the National Social Security Fund (NSSF), Post Office Savings Bank, The Central Bank, Commercial Banks and Insurance Companies. More revenues could possibly be raised from sources such as import duties and income taxes (company and personal) if administration was improved. Foreign sources have been forthcoming because Kenya has established a good credit rating abroad and is seen to be capable of implementing foreign assisted projects. This includes housing projects for which very substantial external funds are still untapped. To explore new uses for old sources and new sources for old uses are strongly RECOMMENDED.

11. The same high score for self-financing given to the Central Government cannot be conferred on Local Authorities. They are notoriously poor, both with respect to financial resources and their ability to administer them efficiently. This has had radical consequences for Mombasa, Kisumu and Kiambu which are now administered by caretaker committees. Other local authorities, particularly county councils, do not fare much better. Housing funds are provided almost exclusively by the National Housing Corporation, a para-statal body, though Nairobi is an exception. This situation is not entirely the fault of the local authorities, since their revenue base is modest compared with their committments. We RECOMMEND that property tax and housing revenues be reviewed with respect to generating much more revenue than at present and that separate housing accounts be kept in all local authorities in accordance with instructions.

12. The National Housing Corporation is treated under "public sector housing finance" but the potentially most important new institution which could generate funds for housing is the NSSF referred to above as by far the largest purchaser of government bonds. Since it is a fund to provide workers with a pension upon retirement it has been RECOMMENDED by others that while the funds accumulate the workers could derive a real benefit from them by having some (about 5%) of these funds invested, through an intermediary, in housing. This has met with approval at various levels of government and it is suggested, in a recent report on the subject, that this may best be done through housing cooperative societies.

13. Housing finance in Kenya is characterized by an almost equal share being provided by the public and private sector; the public sector institutions very distinctly concentrating on the lower income housing and the private institutions catering to the rest. Although the distinction is not always clear it is true to say that public sector housing finance is more attractive for the beneficiary due to certain elements of subsidy. It is clear that where subsidies are given at the moment, they are often unnecessary, perhaps even counter-productive. A separate investigation of cost and benefits of housing subsidies is RECOMMENDED.

14. It is the Ministry of Housing and Social Services (MHSS) which are responsible for formulating and implementing the Government's housing policy. This obviously includes the strategy for public housing finance mobilization and allocation. Housing needs for the various districts and towns in Kenya has been carefully worked out with the assumption, wrongly we believe, that all those in need of a house will spend 20% - 25% of their income on housing. From this figure, costs of structure and total capital requirements are calculated. Likewise, it is unrealistic to assume that if housing expenditures are directly related to income the best form of finance arrangement is a fixed amortization annuity. With an inflation rate of 10% - 15% for many years this is clearly an inappropriate financing form if one is to attract funds into housing. As regards rent propensities, studies in Kenya and elsewhere have shown that these vary between 40% and 10% for poor and rich respectively.

15. National Housing Corporation is the executive arm of the MHSS. As such it is primarily responsible for making funds available for local authorities and to assist them with project preparations. But since only the largest 38 localities are on their list of eligible recipients of project funds the NHC has also undertaken to give loans to individuals outside these 38 areas. On the other hand no one can receive an individual loan if the house is to be constructed in one of those areas. This is an arbitrary and poorly functioning system. With individual loans now approaching 5000 it is becoming unmanagable. Our RECOMMENDATION is for NHC to discontinue this type of lending and to engage in lending to cooperatives for which it is mandated.

16. Local authorities are sometimes refused a necessary loan-sanction from the Ministry of Local Government for reasons unrelated to housing. In other cases local authorities may get loan-sanction but be refused loan approval by the NHC, usually for reasons of being in arrears in other loans. In both these circumstances local authority is denied housing developments which it needs, for which the funds are available and from which it can generate additional revenue. The NHC may choose to execute a scheme on its own and has done so in several cases. This adds to the burden of administrative work, which evidently is the main bottleneck, more so than the supply of funds, some of which lie idle for long periods of time.

17. Funds from NHC are given on concessionary terms namely at 6.5% interest over 20 years period for tenant-purchase, and over a 40 year period for rental units. This is not in line with government policy, strictly speaking, but is justified by the fact that NHC raises the money from the Government at a rate of 6% interest. However, the reasoning for concessionary terms is that it should benefit the ultimate consumer. Instead the local authorities exploit the terms to the extent that about 30% is added on to the cost of finance by charging higher rents plus maintenance and administrative charges to the allottees.

18. Maintenance costs in local authority housing are higher as is considered normal in private sector owner occupied housing. Whether this fact reflects on the tenants, the maintenance staff or is an item used by local authorities to cover up for other expenses not strictly chargeable is unclear, but it would still seem the best argument for a RECOMMENDATION to sell rental units to their occupants and let them take over maintenance responsibilities themselves. The same can be said about tenant-purchase houses for reasons of administration. Not all such units need necessarily be sold, but it will be in conformity with the government's policy of home ownership and it could be instrumental in turning funds over faster for new housing, apart from using the saved maintenance expenditure for new construction as well. In the case of Nairobi alone this approach could mean in excess of 200 more new units per year.

19. A forthcoming detailed analysis of the NHC is intended to throw more light on the structure and function of this important link in Kenya's public housing system. It is important however, that such a study deal with the role of the local authorities in the housing finance process and the crucial interfaces between the local authorities and allottees on the one hand and the local authorities and NHC on the other. Many of the difficulties in administering large sums of public money for housing all over Kenya stem from the ill suited loan conditions offered to the ultimate beneficiaries, such as high deposits, fixed repayments and low interest rates.

20. In the private sector mortgage institutions have been very successful with a "sellers' market" prevailing since a few years after independence. The chronic shortage of funds (deposits, savings, shares) compared with the constant queueing for loans would be a strong argument for RECOMMENDING offering higher interest rates for deposits and asking even higher rates for loans, in order to maintain the interest spread. If all three major institutions did this they would not be competing against each other but against less profitable investments plus the fact that they would encourage savings from those who now consume rather than taking a negative interest on savings in real terms.

21. The Housing Finance Company of Kenya (HFCK) is jointly owned by the government and the Commonwealth Development

Corporation (CDC). The Savings and Loan (Kenya) Ltd. is owned by a commercial bank (Kenya Commercial Bank). The third major mortgage finance institution, The East African Building Society (EABS) is the only institution registered as a building society, thus operating under somewhat stricter regulations than the other two, and having to rely on its members for deposits. More recently it is also enjoying trustee status and receives deposits from institutional savers. Paradoxically all three of them are instrumental in moving resources from the lower to the higher income groups by virtue of the clientele as depositors and borrowers respectively.

22. There is nothing intrinsically wrong with borrowing from the poor to give to the rich if the poor come for deposits only. However, the terms and conditions offered by these institutions are such that for reasons of security, size of deposit, rent propensity (which is determined by the institution) location and income many of those who have been customers on the deposit side for a long time would never be accepted as borrowers - if they even had the thought of applying. For administrative reasons it is not RECOMMENDED here that there should be new regulations for these institutions, but when large public funds are placed on deposit it is not unreasonable that they carry some strings as to the conditions for their use, such as for instance maximum cost of houses to be financed, minimum deposit to be required, number of years till maturity etc..

23. EABS and HFCK have both engaged in estate development. EABS through an investment company called Akiba, as it is prevented from being a developer by the Building Societies Act. Although HFCK through CDC funds is by far the larger developer of the two the efficiency by which both organisations implement projects and their general acceptability to the middle income groups is praiseworthy. We RECOMMEND that they be considered for additional funds for this purpose by local as well as other foreign investors. Specific conditions as to type of development, location and target groups could be negotiated to be in line with government policy.

24. Terms and criteria for deposits as well as for lending are very similar in the three institutions. HFCK will give up to 90% of cost as a loan and will go as high as 20 years for repayment, but all three require the same degree of security, which means an unencumbered first charge on the title. None of the three have had losses due to defaults on loans though they all experience late payments on a few accounts. But on the whole it is a very profitable business and it is thus RECOMMENDED that more of these institutions be encouraged to enter the market.

There is no organized secondary market for mortgages and an initiative in this direction is therefore also RECOMMENDED.

25. Security for mortgage loans to rural housing has always presented a problem in Kenya. Either clear titles do not exist, or they are not registered, or it is difficult to establish a value for the property even if other conditions are filled. This fact is explained by traditional attitudes towards housing and is not likely to change. Instead housing cooperative societies or other groups with a common bond may serve as a catalyst in facilitating loans and assisting with technical and administrative tasks. Housing cooperatives have proven very effective in other countries and we RECOMMEND they be given the proper encouragement by way of funds and technical assistance.

26. The more informal sector of housing finance is represented by such varied elements as employers, housing companies and individuals who by savings or access to funds from relatives, friends or a savings and credit society contribute substantially to housing finance. To this category also belongs the so-called self-help efforts of individuals or groups. In the low income housing field these informal resources are crucial. It is therefore important that they receive encouragement by way of incentives instead of being hampered by regulations which often cannot be administered fairly, if at all. Our RECOMMENDATIONS in this respect are that employers be enduced by tax allowances, housing companies by loan guarantees, individuals by joining cooperatives, which, in turn, may be supported with long-term finance by the Cooperative Bank's new finance company and self-help groups by technical assistance.

27. A number of more policy oriented questions have been treated in the light of existing constraints on the supply of as well as on the demand for housing finance. Although there appears always to be an excess demand those most in need of better housing do not always register their demand because they are ruled ineligible for reasons of income, length of residency, security, repayment terms, amount of deposit and housing standards, etc. Basically these constraints may be reduced to two, namely standards and repayment terms. Standards to a large extent determine minimum cost, security and affordability. Repayment terms very directly determine affordability. Standards are presently being looked at, but repayment terms not yet. We RECOMMEND that this exercise be undertaken urgently. Some RECOMMENDATIONS relate to changes in policy. For instance, the question of supply constraints touch on basic policy issues. One such issue is land tax where the prevailing system is clearly out-dated. For instance undeveloped land ought to be taxed higher than developed. Tax deduction for interest payments on mortgages is permitted without adding an amount for owner occupancy (saved rent) which is tantamount to a large subsidy to home owners, who need it least of all. Rent control and rent tribunal is enacted through the Rent Restriction Act of 1965. It is totally ineffective and should either be completely changed in scope, if rent control is indeed still a policy objective, or be discarded. More decentralization of technical assistance for housing i.e. local authorities and support for their efforts to mobilize resources locally is another policy issue not confined to housing alone.

29. Finally a number of minor RECOMMENDATIONS related to the USAID HG schemes are brought up in order to improve their impact on supply and administration of low income housing. One is the possibility of encouraging early repayment of loans in dwellings which are sub-let. Another is a progressive repayment schedule for loans also known as a low-start mortgage. A third is tied with the second, namely a redefinition of the affordability of the target group and a fourth is the suggestion that in rural housing certain subsidies ought to be considered. However, in urban housing those that exist should be removed and higher interest rates charged.

2.0. The Financial Sector

2.1. Level of Economic Development

At the time of independence in December of 1963, Kenya's per capita income was around $85 per year. This placed the country squarely among the least developed countries of the world. Along with a very poorly distributed wealth, which makes even the low figure above misleading, the new government inherited a very heterogeneous economy where the urban sector with 8 percent of the population was highly developed and managed mainly by non-Kenyans. The situation was an enormous challenge not only economically but politically as well.

In its strategy for economic development the new Kenya government set three major goals:

i. to achieve a fast overall growth rate
ii. to ensure that the benefits of development are distributed equitably
iii. to undertake the Kenyanization of the economy.

Now, fifteen years later, any neutral observer will have to admit that remarkable progress has been made towards the first of these goals. Virtually all economic indicators are above the average for countries at Kenya's stage of development. GDP, for example has grown at a surprisingly steady rate of about 6 percent per year lifting Kenya of today out of the group of least developed countries with a GDP per capita of $256 thereby making it one of the fastest developing countries on the continent in spite of its lack of mineral and oil resources.

Some economic indicators covering the most recent years should be singled out for the purposes of this report. (see table 1 of the Appendix)

The main characteristic is the unprecedented growth over the last couple of years in export earnings due to abnormally high coffee and tea prices on the world market. This fact coupled with good harvests brought a boom to the economy which permeates many of the indicators listed.

The balance of payment registered a surplus in 1977 of KShs 2,253 million which in turn pushed up foreign reserves to a record level of KShs 4,800 million equivalent to nearly six months' imports. This development had its effect on the expansion of the money supply and domestic credit which grew by 47 percent and 23 percent respectively. At the same time inflation for 1977 was boosted to a high of 16.1 percent which means that in the production, budget and national accounts' figures one in roughly every six shillings represents price escalation. The average rate of inflation for 1978 was 13.1 percent. The most impressive figure for 1977 is the more than doubling of the amount of approved building plans by the Nairobi City Council compared with the year before. The years prior to 1977 had shown an uneven development explained elsewhere in the report.

The stock market index is perhaps the most accurate reflection of how the investing public judged the economic climate in Kenya over the past eight years. It clearly shows that 1972, 1973 and 1974 were lean years from an investor's point of view. The index picks up again in 1975 and makes a big leap forward from 1976 to 1977. The prospects have generally speaking, been good during 1978 the index presently (Feb. 1979) standing at 410. This is only a moderate gain on the year before, but was to be expected in the light of some recent curbs on imports and liquidity ratios. The reason for these imposed limitations being a trade deficit for the year 1978 caused by considerable decline in the export prices for coffee and tea plus continued increase in values for imports.

The most important financial resources for development are domestic savings, government revenue and foreign exchange. We shall briefly examine how each of them performed over the last ten years.

Domestic Savings

Unlike many of the other developing countries, Kenya has a good record of aggregate domestic savings. Gross domestic savings has been around 20 percent of GDP in most years since independence. In 1977 this percentage reached 25. The major part of these savings come from households who save about 10 percent of personal disposable income. Next in importance is corporate savings followed by public sector savings.

It may be difficult to maintain such a high rate of savings in the future, particularly with a high rate of inflation but much will depend on fiscal policies which operate in the field where the propensity to tax is far from exhausted. Similarly the propensity to save appears high provided the institutional services are there to cater to savings for specific purposes. The more recent demonstration of this fact are the very impressive contributions from all levels of society for the so-called "Harambee" projects, which for educational projects alone amounted to nearly KShs 400 mill. over the period 1967-76. The dramatic growth in savings through the credit union movement is highlighted in 3.1.4.

Savings mobilization in Kenya compared with 25 other developing countries and two highly developed ones is shown below.

	Kenya	UK	US	Average of 25 Countries
	%	%	%	%
Demand Deposits relative to Total Deposits	47	33	32	67
Currency in Circulation relative to Total Liquid Assets	15	11	6	32

Source: AID paper presented at Regional Meeting on Housing Finance and Management. Nairobi, Nov. 1978.

Demand deposits represents short-term savings,thus a low figure indicates high long-term saving.

Currency in circulation says something about the degree to which people use the banking system (current and savings accounts)

Government Revenue

Also in the field of fiscal policy and public savings the record in Kenya is noteworthy. Mainly through taxes the government revenue was boosted from KShs 1,000 million in 1963/1964 to about KShs 2,880 million in 1972/1973 and reached KShs 9,106 million in the last financial year. In addition the public sector has been able to raise KShs 1,400 million through the sale of government bonds. A similar amount was transferred from current revenue to the development fund. Public savings amount to about 5 percent of GDP and it is perhaps difficult to expect more from this side. However, local authorities, apart from Nairobi with appropriate support from the Central Government can and should be generating more revenue locally. (see 4.1.4.)

Foreign Exchange

Only more recently have the foreign exchange constraints started to worry the authorities although apart from the most recent years, Kenya has had a deficit on the current account. The balance of payment has normally been balanced by large inflows of foreign capital.

Long term foreign capital transfers in 1977 amounted to Shs 616 million and KShs 1,128 million for the private and public sector respectively. It is generally felt that even though export earnings may tend to level off there is no reason to think that capital inflows will. The tightening of exchange control measures and the expected normalization of trade with Tanzania and Uganda should also contribute to enhance the availability of foreign exchange for essential and even some non-essential imports.

Housing is not likely to suffer much, because imports for the purpose are considered essential goods with few restrictions. On the whole, then, Kenya has performed very well indeed in mobilizing domestic as well as foreign financial resources.

It has often been predicted that as high income non-Kenyans left the country savings ratios would fall. There is no indication that this is happening, presumably because incomes for Kenyans have been rising at the same time and their savings remain in the country. The Kenya shilling has remained fairly strong internationally having stayed within a range of KShs 7.14 to 8.45 for one US Dollar since 1974 (reflecting more the dollar's fluctuations) presently standing at about 7.50. Compared with Tanzania and Uganda shillings on the "free" market Kenya has by far the hardest currency of the three.

In spite of its success in achieving rapid economic growth there is still far to go in reaching the second target, that of an equitable distribution of the benefits of development.

The World Bank report on Kenya (June, 1975)[1/] treats this particular objective in great detail and explains both reasons for and measures against these failures. Suffice it to say at this stage that the World Bank report was in some aspects too pessimistic in its prediction for the near future, partly because they had no idea of the zooming export earnings.

The last goal for the Kenya economy was its Kenyanization. This policy has been pursued vigorously and, by and large, with good results. The building industry still suffers a lack of skilled craftsmen and site foremen, but the government has an ambitious program of training in this field and the problem is apparently under control. Adjustment of standards and a more constant building program are other factors which will help overcome the man-power constraints. On the finance industry, the man-power problem is less due to internal training and high salaries. However, salaries in the private sector have drained many good staff members from the public sector which clearly suffer the consequences.

With its choice of a free enterprise system combined with traditional forms of African socialism, Kenya has performed better than most developing countries over the past fifteen years. It still needs and receives technical and financial assistance particularly for rural development projects and for urban housing for the lower income groups. In this respect Kenya has built up a solid reputation of creditworthiness and relatively efficient implementation of assisted projects.

1/ Kenya:- into the second decade. John Hopkins, June, 1975.

2.2. Level of Financial Infrastructure

The previous part of this chapter set the stage for understanding the level at which financial institutions operate in Kenya. We shall now take a closer look at the institutional framework with regard to the financial intermediaries of which housing finance institutions are but a part. Two reasons compelled us to take this approach. One is the difficulty in making a sharp distinction between those intermediaries which specialize in mortgage finance and those who lend on mortgages for other purposes than the construction of new houses or the transfer of existing ones. Secondly, the structure and function of the other institutions individually and as a whole are sometimes complementary, sometimes competitive to the housing finance institutions. Together they are an important mechanism in the implementation of monetary policy and, conversely, all of them are directly influenced by policy changes over which they have no control. The level of their sophistication is thus a measure of their effectiveness as a delivery system of financial resources and, indirectly, of other resources as well.

Kenya's financial infrastructure consists of three main systems:

i) the Banking System
ii) the Non-Bank Financial Institutions
iii) the Public Sector Financial Intermediaries

In the following chapter we shall describe them in some detail. At this point it is important to point out that for a country of Kenya's size and stage of development they represent a rather comprehensive set of financial services available. In fact, practically all of the financial services available in highly developed countries are also available in Kenya, although procedures may be slow and outdated in some cases.

The British tradition in commercial and central banking as well as in housing finance still prevails. This has been both a strength and a weakness for Kenya. A strength, because the system had experience and contacts to draw upon. A weakness, because it was not well adapted to the changes which took place after independence. It is by nature very conservative and lacked some of the flexibility which the new situation required. This shortfall has to some extent been remedied by the creation of several new institutions, but, as we shall see later, institutions which have proved very appropriate in some Franco-phone and Latin American countries at Kenya's level of development have not yet found their way onto the Kenyan scene. Particularly in the field of housing finance the system is in need of differentiation and closer adjustment to realities in Kenya today. (see 5.0.)

Apart from the British there are now Japanese, American, Dutch, Swiss, Pakastani, Indian and Yugoslavian banks

established locally and new ones appear on the scene at the rate of two-three a year. Three non-bank financial institutions were incorporated over the past year bringing the number of this type of institution to fifteen. This is a very healthy development and demonstrates the confidence Kenya enjoys among investors both at home and abroad.

The non-bank financial institutions can be divided into four groups according to their specific functions:

i) - the hire purchase houses
ii) - the mortgage finance institutions
iii) - institutions which finance a variety of larger items and provide equity capital
iv) - insurance companies

A tie between a commercial bank and one or more of the three non-bank institutions is a common feature in Kenya. This provides a ready line of credit for the institutions and apparently a healthy line of profit for the banks. It is often said that the finance companies are doing the dirty work for the banks, but there is nothing intrinsically wrong in specialization. Banking regulations permit it and the interest differential makes it profitable - a point we shall make more of in the section on housing finance.

Public sector intermediaries can also be classified according to their specialization - agricultural credit, industrial and commercial credit, tourist promotion and housing finance.

In the first category one finds the Agricultural Finance Corporation (AFC) which was set up in 1963 for the purpose of deploying government funds in all types of farm credit including mortgage loans. This responsibility was taken over from the Land and Agricultural Bank in 1969. The Agricultural Development Corporation (ADC) on the other hand, looks after the transfer of former expatriate owned farms to Kenyans. Whereas the AFC is financed mainly by the Cereals and Sugar Finance Corporation, the ADC got most of its funds from IBRD/IDA and the British Government. Under the group of agricultural finance comes a number of marketing boards, which provide crop and other types of finance for specialized producers such as maize, wheat and cotton. The mechanisms they employ and the loan security required will be taken up later in connection with rural housing finance.

Industrial and commercial finance by the public sector is the responsibility of the Industrial and Commercial Development Corporation (ICDC) with its origins back to 1954. It provides loans and equity capital to new private ventures or facilitates the take over of foreign owned enterprises. For the specific purpose of generating new major industrial enterprises in partnership with foreign companies, ICDC in 1963 formed the Development Finance Company of Kenya (DFCK) as a

joint venture with German, British and Dutch public development companies. In addition to these two major sources of finance there is a "Small Traders Joint Loan Scheme" which gives loans mainly for commercial ventures, such as small retailers and wholesalers mainly in the rural areas.

None of these bodies accept deposits, but like the Cereals and Sugar Finance Corporation, the ICDC and DFCKcan issue shares to the general public or raise loans locally or abroad with government sanction. It is worth noting that the DFC as opposed to the other agencies does not subsidize its financing. Capital is provided purely on market terms with no apparent effect on demand for their funds.

In 1965 the Kenya Tourist Development Corporation was set up very much on the same lines as ICDC. It has no capital of its own, but raises the funds it needs for tourist facilities of a great variety, including shareholders in lodges and hotels, by borrowing from the government and by loan issues from the domestic and foreign capital markets, again subject to the authorization of the Ministry of Finance.

Through these development corporations, the Kenya government has become very actively involved in agriculture industry, commerce and tourism. This is intentional and desirable from many points of view including the foreign investors'. In this way foreign skills and licences are enjoying the government's particular interest and protection while at the same time local staff and business policies are being adopted under the direct participation on the boards by Kenyan officials. The same kind of approach has its analogy in housing, namely through the Housing Finance Company of Kenya which was set up as a joint venture between the Commonwealth Development Corporation (UK) and the Kenya government. We shall return to the analysis of this institution in the section on Housing Finance where the National Housing Corporation also will be looked at in greater depth.

3.0. Growth of Institutional Framework

3.1. The Private Sector

It is not always possible to keep the distinction between private and public sector when looking at financial institutions because, as was pointed out in the previous section, some institutions are joint ventures between the GOK and the private sector. In this context only institutions which have no private sector participation at all are considered "public", the rest being classified as "private" even if these by virtue of their registration are public companies (as opposed to public sector companies.)

Licensed Financial Institutions as of December 15, 1978.

1. Akiba Loans and Finance Limited *
2. Credit Finance Corporation Limited
3. Diamond Trust of Kenya Limited
4. East African Acceptances Limited
5. East African Building Society (registered under Societies Act) *
6. First Chicago (Kenya) Limited
7. Grindlays International Finance (Kenya) Limited
8. Housing Finance Company of Kenya Limited *
9. Kenya Commercial Finance Company Limited
10. Mombasa Savings and Finance Company Limited
11. Savings and Loan Kenya Limited *
12. National Industrial Credit (East Africa) Ltd.
13. Kenya National Capital Corporation Limited
14. Kenya Finance Corporation Limited
15. Continental Credit Finance Limited

* Institutions which specialize in mortgage lending.

Licensed Commercial Banks in Kenya as of December 15, 1978.

1. Algemene Bank Nederland N.V.
2. Bank of Baroda Ltd.
3. Bank of Credit and Commerce International Ltd.
4. Bank of India Ltd.
5. Bank of Tokyo Ltd.
6. Barclays Bank International Ltd.
7. Central Bank of Kenya *
8. Citybank N.A.
9. Commercial Bank of Africa Ltd.
10. Cooperative Bank of Kenya *
11. First National Bank of Chicago
12. Grindlays Bank International Ltd.
13. Habib Bank Overseas Ltd.
14. Kenya Commercial Bank Ltd. *
15. National Bank of Kenya Ltd. *
16. Standard Bank Ltd.
17. Industrial Development Bank Ltd. *
18. Ljubljanska Banka

* Banks with 100% Kenya Shareholding (private or government)

3.1.1. Commercial Banks

Until the end of 1967 Kenya's banking system consisted entirely of branches of foreign owned banks (some of them have served the country's European and Asian community for many years prior to Independence). The first bank to do business in Kenya was the National Bank of India which opened its first branch in Mombasa in 1896 (later incorporated into the National and Grindlays Bank). The geographical coverage was very poor until after the Second World War. However, by 1965 the "Big Three" British banks which between them accounted for 80% of total deposits in the banking system, had a combined network of 177 offices around the country. In fact, it still is a characteristic of the financial infrastructure in Kenya that it is surprisingly well spread compared with other developing countries. Still, the government is adamant that more rural areas need bank branch offices. To that end very strong directives have recently been issued to the banking system to the effect that for every new branch opened in the major urban areas another branch must be opened in a rural area that has no banking facilities.

Some of the northern parts of the country, for instance, are still very poorly served due to the low density of the population. But even if a bank office is missing there is often a possibility to bank via the local post office, either with the Post Office Savings Bank or by mail with one of the other financial institutions. Until the creation of the Central Bank in 1966 and the enforcement of the Banking Act in 1969 the banks were subject to virtually no institutional or monetary policy constraints.

Two banking ventures were started in recent years at the initiative of the GOK. One is the Kenya Commercial Bank (KCB) which in 1970 took over the former National and Grindlays Bank and is now the largest bank in Kenya with assets totaling KShs 3,600 million.

The National Bank of Kenya was also a GOK funded project started in 1968 and now well established with assets in excess of KShs 2,200 million. Both of these banks have separately registered Finance Companies and the KCB is also the sole shareholder in Savings and Loan (Kenya) Ltd. The N.B.K. is also contemplating setting up a separate housing finance company.

Otherwise the commercial banks in Kenya, foreign, as well as locally owned, engage in all the normal banking activities including merchant bank facilities, foreign exchange transactions, purchase of treasury bills and direct investments. A breakdown of loans by category of borrowers is listed below from which it is apparent that "Trade" (Import, Export and Domestic) is the sector receiving the largest share of loans, closely followed by "Manufacturing", "Other Business" and "Agriculture".

COMMERCIAL BANKS: ANALYSIS OF BILLS, LOANS AND ADVANCES-
June, 1978

Public Sector	KShs. Million	% of Total
National & Local Government	14.2	-
Statutory Boards &Others	317.4	4
Agriculture	1,387.7	15
Manufacture	1,712.9	19
Building & Construction	377.3	4
Export Trade	435.6	5
Import -	461.2	6
Domestic -	1,118.8	12
Transportation	342.1	4
Financial Inst.	382.0	4
Other Business	1,607.3	18
Private Households	865.8	10
TOTAL	9,022.1	100

SOURCE: Central Bank of Kenya

The item "Other Financial Institutions" reflects loans to subsidiary finance companies as referred to above.

Commercial banks in Kenya have performed very well in attracting deposits. Together with the other financial institutions the ratio of deposits to total liquid assets, including currency in circulation, reached 85% in June of 1978 which is very high compared to other developing countries. Ratios of Total Advances to Total Deposits have varied between 84% in December lf 1974 and 62% in October, 1977 corresponding to liquidity ratios of 16% and 38% respectively and which reflect the excess liquidity in the banking system during the height of the coffee boom. Since then liquidity has steadily decreased standing in September of '78 at 23%.

The legally required minimum liquidity ratio is 20 since January 1st, 1978. The origin of deposits in commercial banks as of June, 1978 can be seen below.

COMMERCIAL BANKS: ANALYSIS OF DEPOSITS JUNE 1978 KShs Mill.

	Demand	Time	Savings	Total
Central Government	138.4	4.3	1.6	144.2
Other Public Sector	671.2	973.1	16.6	1,660.9
Private Sector	4,629.9	2,760.0	2,243.4	9,633.3
TOTAL	5,439.5	3,737.4	2,261.6	11,438.4

SOURCE: Central Bank of Kenya

It is noteworthy that deposits by the public sector is as high as KShs 1,805.0 mill. amounting to 15% of all deposits in private commercial banks. Investigations reveal that part of the reason is that several of the statutory boards cannot spend the funds at the rate they are allocated to them. This is, for instance, the case with the National Housing Corporation.

Commercial banks, as opposed to their subsidiary financing companies, do not get involved in housing finance to any significant degree. This is partly due to the traditional banking approach of lending "short" and partly because government regulations limit commercial banks to long-term lending of no more than 15% of their loan portefolio. On the other hand commercial banks offer an invaluable service in providing bridging finance for developers and commercial credit to the building industry.

3.1.2. Non-bank Financial Institutions

Under the Moneylenders Ordinance and the 1956 Banking Ordinance the non-bank financial institutions were subject to the same regulations as commercial banks except that they were not permitted to provide customers with cheques for the transfer of their deposits. This is still the case, but the Banking Act of 1968 introduced a number of other distinctions the most important of which relates to the type of accounts and level of reserves they are obliged to carry.

As pointed out under 2.2 the non/bank institutions fall within one of three categories: hire purchase financing, mortgage lending and a third category which provides a variety of trade financing including equity participation and insurance.

Three years ago there were three hire-purchase houses in Kenya. The oldest, the Credit Finance Company of Kenya, was set up in February of 1955 with a capital of KShs 5 mill by James Finlay & Co. Ltd. of UK and Harold Travis, a prominent businessman in Nairobi. They were joined in 1960 by the National and Grindlays Bank as shareholders and a safe source of funds.

National Industrial Credit Corporation was set up in 1959 with the Standard Bank as major shareholder. More recently another two finance companies have been formed by commercial banks.

The hire-purchase business is characterized by offering interest rates 1% - 2% above other institutions and having a much wider interest differential (up to 10%) than commercial banks and housing finance institutions where a 5% spread is normal. The interest tabulation(Table II of the Appendix)is misleading in that it quotes interest rates per annum but does not distinguish between "front loading" and "rear loading" of interest charges. This means that if interest of 10% is added on at the beginning of the loan period and the loan is typically a 1 - 1½ year loan, the effective annual rate of interest works out at 19%. This, however, is the standard procedure of these institutions and they appear to have no trouble finding borrowers nor, to a lesser degree, depositors. The bulk of their lending is for motor cars and household appliances. These loans are often considered short and risky and notices appear regularly in the daily papers announcing auctioning of such items by the hire-purchase companies. However, the companies are very successful and their loans have increased eight-fold over the past 10 years. As of 1st October, 1978 they stood at KShs 426 mill. which, incidentally is almost the same amount as loans outstanding for housing.

The mortgage business is done along the traditional British lines and characterized by its prudence and preoccupation with medium to high income housing. We shall return to this subject in more detail in the next section. Suffice it to point out here that although two of the three institutions are virtually owned by the Government they do not seem to conform to the weighting of government's objectives in the latest policy statements. The income groups catered to are on the whole sophisticated borrowers and it would appear that the system is far from sophisticated enough to offer these borrowers the range of services they require - let alone catering to the unsophisticated lower income person, other than as a depositor. In short, the mortgage business in Kenya serves to transfer financial resources from the poor to the rich. They would be even more successful in this if they were able to mobilize more deposits. But they are reluctant to offer higher interest rates to their depositors because it would mean having to charge higher interest rates on loans, - for which the better-offs are queueing. Reluctance to change stems from a fear of starting an "interest war" and because all three institutions are doing very well as it is.

There is no organised "Second Mortgage Market" in Kenya, a fact we shall make more of later. Likewise, the Central Bank does not offer discounting facilities for mortgages, and mortgage loans are still difficult to transfer from the previous to the new owner without additional scrutiny and cost. Of current new lending about 1/3 goes to finance existing houses.

3.1.3. Other Financial Institutions

Among the "other financial institutions" are the Diamond Trust of Kenya, Ltd. which dates back to 1946 when it established its head office in Dar-es-Salaam and opened a branch in Mombasa. It has since moved its H.Q. to Nairobi and has had a spectacular growth over the last five years. Its equity is owned mainly by institutions and individuals from the Ismaili Community whom it served almost exclusively until about 1965 when it actively encouraged the general public to make use of its deposit and loan facilities. The main part of the finance business still goes to large ventures by Ismailis.

Industrial Promotion Services (Kenya) Ltd. is another Ismaili owned organisation which takes equity capital in major industrial developments in the private sector. Akiba Loans and Finance Ltd. was started in 1970 by people closely associated with the East African Building Society (EABS). The reason being that as a building society it was not in a position to act as developer. Akiba, as a finance company, can do this and has, among other investments, developed over a hundred medium cost houses which were subsequently sold and financed by EABS. Both of the locally owned commercial banks, KCB and NBK have started finance companies for the purposes of hire-purchase finance as well as equity participation.

These institutions have obviously filled a gap in the Kenya financial infrastructure since they have all expanded rapidly over the last decade. They help complete the supply of differenciated services on the lending side. The same gap, has not been filled adequately yet by local institutions on the deposit or fund-mobilization side. As Hicks pointed out over a decade ago*) it is not the number of institutions which is important in generating financial resources, it is the number of different instruments and possibilities they offer. The choice for depositors in Kenya is very limited, especially at the more rewarding level with the exception of private money lenders who charge on the order of 240% interest p.a. but do not accept deposits.

3.1.4. Savings and Credit Societies

Whereas cooperatives have existed in Kenya from before independence the credit union movement is of more recent origin. Traditionally, informal savings and credit societies always existed but it was not until about the middle sixties that saving and credit cooperatives were registered as such and started to form themselves into larger credit unions. Mention of them is made here because some of the larger societies already finance housing for their members, but more particularly because they serve a function which neither banks nor non-bank financial institutions provide, namely, the local, common bond, facility for placing small savings

---

* U.K. Hicks, "Development Finance", Oxford University Press, 1965.

on demand at 6% interest and providing loans to members as a matter of obligation, though within limits, at 12% without asking for security. No more needs to be said about their organisational and administrative set-up which on the whole conforms to those of any cooperative society. The record of their progress speaks for itself:

	1974	1976	1978
No. of Societies -	155	350	510
No. of Members -	83,000	160,000	200,000
Share Capital in KShs-	96,000,000	136,000,000	200,000,000

Their limitation is, of course, that they do not have access to deposits from institutional savers, to discount facilities, nor as yet, to overdraft facilities.

The societies are free to set their own lending and deposit terms but their objective is to provide members with short-term loans for durable goods or emergencies. The growth of some of the older societies is such that they can now offer members loans of up to KShs 30,000 for three years which is adequate for some types of housing investment. The interest structure, simple as it is, converts to ½% per month for savings and 1% per month for loans. This compares very favourably with the interest rates offered and charged by finance companies,- not to mention money lenders who were often the only source of finance that many of the members previously had.

The performance of the savings and credit societies and their active leadership was indirectly responsible for the initiative on cooperative housing referred to earlier. It is envisaged that the loans members are entitled to from their society will in many cases be adequate as the deposit (self-finance) which normal mortgage loans preclude, and which for most would-be borrowers, proves a real stumbling block.

The Cooperative Bank in Kenya is specifically catering to cooperative societies as opposed to individuals. Having just registered a new finance company the Cooperative Bank proposes to provide longer-term finance to, among others, housing cooperative societies. More will be said in the following section about the potentials and mechanics of cooperative housing finance.

3.1.5. The Stock Exchange

A few words on the Kenya Stock Exchange, which is, after all, a private institution serving the capital market in a very substantial way. There are at present 56 companies listed and their total nominal value is KShs84 million.It is important to point out that the general consensus among stockbrokers here is that "too much money is chasing too few stocks". Even though the government bonds are traded here, there are relatively few private enterprises who have gone public.

Recent issues of ICDC stock were very popular indeed and there is reason to believe that other respectable companies would meet with equal success. If going public scares companies away for reasons of public accountability, perhaps the government should take the initiative and introduce a variety of new negotiable instruments on the market including discounted mortgages of both first and subsidiary types. This would not only mobilize new resources but also help establish a sound interest rate structure for the different instruments.

3.2 The Public Sector

3.2.1. The Central Bank

A better understanding of the workings of the Kenyan system of bank and non-bank financial institutions requires some additional information on how they function in relationship to the Central Bank and to the public sector as a whole.

Up to 1966 when there was a common currency for Kenya, Tanzania and Uganda, the East African Currency Board played the role now performed by the Central Bank only in a much more limited way. When it became clear that the idea of a common central bank for all three East African countries could not be reconciled with national sovereighty in monetary policy, each country set up its own Central Bank. Kenya did this by the Central Bank of Kenya Act of March 24, 1966. The Bank started operation in September of the same year.

The Central Bank's relations with financial intermediaries and with the Government may briefly be summarized as follows:

As regards financial intermediaries the main regulations are those which govern reserve requirements, regulation of interest rates paid on liabilities, refinancing and credit control. Reserve requirements are dealt with in Section 38: "The Bank may...require specified banks to maintain minimum cash balances on deposit with the Bank as reserves against their deposit and other liabilities (at the moment 20%).....specify different ratios for different kinds of liabilities and may further specify the method of computing the amount of total liabilities of a specified bank." One should note that provisions for reserve requirements are not made for non-bank financial institutions. Housing Finance Co. of Kenya which is also registered as a bank has dispensation from this regulation but that legislation is being prepared for this regulation to apply to all financial institutions.

As regards interest rates, the Central Bank in Section 39 is empowered "from time to time to determine and publish the maximum rates of interest which specified banks or specified financial institutions may pay on deposits. Provided that the Bank may determine different rates of interest for different types of deposits and for different types of financial institutions." In this respect the Central Bank does not use its powers to impose interest rates, but reserves its right to approve the interest structure of banks. In effect the lending rate is fixed at 10% now.

The opinion expressed by the bankers is that they are not likely to meet with disapproval if they propose to raise their deposit and lower their lending rates whereas the opposite moves will cause opposition from the Central Bank. However, there are at least three different techniques used in the calculation of interest rates which can make this approval from the Central Bank less important, namely the so-called front-loading of interest, interest on max/min balances over the month or interest calculated for all/none of the month the loan/deposit account was opened. These techniques slightly- and in the case of front-loading very much so - change the effective rate of interest offered or charged. In the present circumstances with an inflation rate of around 13% it is obviously difficult to maintain a long-term lending rate of 12% and on bank loans of 10% - still that is what the Central Bank likes to enforce.

Refinancing facilities are only available to banks. Under section 36 and 37 rediscounts are limited to 180 days and loans and advances to 6 months, the first limit being extendable to 270 days at the Bank's discretion. Loans and advances may be made against government or government guaranteed securities and for the value of securities accepted as security for loans and advances to banks (section 48). The access to refinancing facilities for non-banks is currently being discussed and is likely to be enacted. However the same short-term re-financing is only going to be of little significance to mortgage lending institutions, though it can of course, help them in a sudden tight liquidity situation. It should, but is not likely to, bring about a liberalization in the rigid hierarchy of time-deposit-interest differentiation.

The Central Bank's powers of credit control are defined in Article 40 with respect to the banks. "The Bank may issue instructions specifying in respect of any loans, advances or investments by specified banks:

(a) the purposes for which they may or may not be granted;

(b) the maximum maturities or, in the case of loans and advances, the type and minimum amount of security which shall be required, and in the case of letters of credit, the minimum amount of margin deposit, or;

(c) the limits for any particular category of loans, advances or investments or for their total amount outstanding."

Furthermore, under Section 41, the Bank may "issue instructions designed to control the volume, terms and conditions of credit including installment facilities in the form of loans, advances or investments, extended by specified financial institutions. In the case of housing finance institutions this rule is not applied, but in the case of commercial banks their long-term lending to housing should not exceed 15% of their total loan portefolio.

Since December 1966 the Central Bank is banker to the Government, a task previously discharged by the National and Grindlays Bank. The regulations regarding limits to the Government's borrowing which may not exceed KShs 240 mill. has not been brought into operation because the Government has, for most of the period since 1966, been a net depositor at the Central Bank. Since the Central Bank is also owned by the Government it follows that any profit made is credited to the Government's account. For the FY 1977/78 this profit amounted to KShs 260.2 million.

Finally there are important provisions regarding minimum reserves of foreign exchange. These are expressed in terms of import coverage, namely to be "not less than the value of four months imports as recorded and averaged for the last three preceeding years." (Section 26). Kenya is presently well within this limit.

3.2.2. Central Government Finance

In the two years immediately following independence net foreign borrowings were the only way by which the Kenya Government could finance its capital budget. The local capital market was very small and the Government on its own was a net dissaver. Capital expenditure at that time was approximately 3% of GDP and 15% of the total Government budget. Since then Kenya has consistently reduced its dependence on net foreign borrowings by developing a domestic capital market and improving its own savings.

The public sector savings have been mainly generated by tax revenues of which income tax now brings in KShs 2,964 mill., sales tax, KShs 1,873 mill. and export and import duties, KShs 2,942 mill. All together taxes presently stand at 21.1% of GDP. These amounts are significant in the light of past performance, but starting in the early seventies, Kenya has seriously considered its tax potentials and revised tax-legislation accordingly. Another trend in revising the tax structure has been to directly influence income distribution by a steeper rate of progression and fewer allowances and at the same time shifting some of the tax burden towards consumption particularly of imported luxury items. The tax revenues increased from 16% to 23% of GDP during the period from independence to 1971/72. This had as a consequence that public savings increased to 5% of GDP and the Government was able to finance an average of about 24% of capital expenditures, which themselves at that time were growing at a rate of 27% per year. The public debt has also been used increasingly to finance development expenditure and there appears to be no difficulty yet in placing Government bonds at 7.5% interest so that the public debt as at the end of FY 1977/78 stood at KShs 1,311.4 mill. On the other hand the Government has on the whole been a net depositor with the Central Bank as pointed out above.

The principal owners of government stock are the National Social Security Fund (KShs 2,605.9 mill.) Central Bank

(KShs 885.9 mill.) commercial banks (KShs 619.8 mill.) insurance companies (KShs 238.5 mill.) and Kenya Post Office Savings Bank (KShs 274.4 mill.) These amounts compare favourably with the present level of foreign public indebtedness of KShs. 1,128.0 million.

There is, no doubt, scope for increased revenue on the part of the Central Government in terms of the propensity to tax whereas the treasury bills have to be offered at even higher rates of discount, (standing at 6.3 as of October 1st, 1978). In particular import duty and company taxes would seem to be the obvious targets along with the more traditional ones of beer, tobacco and petrol. We shall return to the topic of property taxes in the following sub-section. For the moment it is fair to point out that the Kenya Government has an impressive record of being able to generate revenues for current as well as capital expenditures from within as well as from abroad and that this record is judged by outside investors to make Kenya's credit rating high among developing countries.

3.2.3. Local Authorities

The same excellent score on finance given to the Central Government cannot be conferred also on local authorities in Kenya. This is not entirely their own fault because they are subject to Central Government regulations with respect to their revenue base as well as to the areas of financial responsibility. The smaller councils in particular find it very difficult to meet other than their current expenditure budgets. In 1970 the Graduated Personal Tax (GPT) was transferred from county councils to the Central Government together with responsibility for education, health services and road maintenance. In 1973/74 the GPT was transferred from all councils. This caused numerous problems for local authorities.

Housing has always been the responsibility of the local authorities as discussed elsewhere in this report, but the funds are provided by National Housing Corporation on long-term loans through which some local authorities are able to generate a surplus for general expenditure. (See also next section).

Along with housing, local authorities are required to provide water supply and sewerage, fire protection, welfare services, public libraries, public transport, markets, etc, some fifty public services in all are listed in the Loaal Government Regulations as coming under their jurisdiction. For all these purposes (except housing) the local authorities have to rely on loans from the Local Government Loans Authority but it is increasingly clear that these sources are not sufficient to cover the gap between the need and the locally generated resources. Local authorities are encouraged to seek funds in the private market including bond issue, but this has proved difficult for all but Nairobi because their economic situation is such that even the commercial banks are

hesitant to provide overdrafts with any impact. It is also for these reasons, among others, that the Central Government has now dismissed the councils of both Mombasa, Kisumu and Kiambu, let them be governed - temporarily it is stated - by a caretaker committee of technocrats.

One of the most underutilized revenue sources for local authorities is the rates on property assessment in urban areas, although Nairobi does get a fair income from government and commercial properties - other authorities are less fortunate. The valuation base for rating purposes in most areas has not been revised since 1959 in spite of a regulation which requires property to be revalued every five years. The increase in market value during the period has been very considerable, perhaps as much as 3 to 4 times the 1959 prices. Furthermore, rates are only levied at the "unimproved" values of properties at flat rates ranging from between 3% and 7% in different areas, although some municipalities have been revising their rates recently. The scope for raising more revenue from this source is considerable and one of the effects would be of taxing some of the windfall profits gained by allottees in public housing schemes. Not only can properties be rated on the basis of "improved" as opposed to "unimproved" value according to the Rating Act but the flat rates should in any case be raised to at least 10%. Another source of income for local authorities could be the sale at market prices of part, if not all, of their publicly owned housing stock. We shall return to this issue in section 6 together with the question of tax exemptions for interest payment on mortgage loans.

3.2.4. National Social Security Fund

The NSSF was created in 1966 for the purpose of providing a pension benefit to salaried workers when they retire. The contributions come from the employers and employees who subscribe to the scheme plus income from investments. As could be expected, benefit payments by the Fund has so far been small whereas the growth in contributions has been quite dramatic. The net assets of the Fund are now in excess of KShs 3,000 million.

The NSSF has been one of the Central Government's main contributors of development funds (see 3.2.2.) but has also placed funds elsewhere such as in blue-chip stocks and with financial institutions, although the latter is to a very modest extent. The Fund also holds some Nairobi City stock. However, the Central Government has taken 95% of its resources.

In assessing the prospective role of the NSSF it is worth noting three things: (1) Benefits are paid out as a lump sum to retiring members, (2) The investment committee of the NSSF is made up of a representative each from the Central Government (Treasury), Federation of Kenya Employers (FKE) and the Central Organisation of Trade Unions (COTU) and (3) that with present monthly net revenues of about KShs 35 mill. and growing, NSSF is a very significant source of new

development funds. A recent report by the Foundation for Cooperative Housing to COTU and the Ministry of Cooperative Development* pointed to NSSF as a source of funds for housing to be channelled through existing financial institutions to housing cooperatives for low-income workers. The report has met with approval by COTU and the Ministry both of whom are promoting it at the Cabinet level. The report gives further details on the allocation of funds and the support services needed to make housing cooperatives effective and reliable recipients of NSSF funds. The main conditions for the use of NSSF funds for housing is that they return at least the same percent as they presently obtain being invested in government stock (7½%) and that they be fully secured by a first charge. It is envisaged in the report that the absorption capacity for this type of input is only on the order of 1% of NSSF's revenue the first year growing to 2% the second a.s.o. till about 5% the fifth and following years. Both the Vice President, who is also the Minister for Finance, and the Minister for Labour recently spoke in favour of the plan.

3.2.5. Parastatal Bodies and Others

All in all there are a total of more than 60 organisations belonging to the parastatal category of establishments. This does not include whatever is left of the E.A. Community institutions. It is difficult to find reliable consolidated information about them even though they account for more than 15% of GDP and absorb one third of government investment. Some of the organisations have purely regulatory and administrative functions whose budgets are part and parcel of the government's. Some twenty organisations function more like private enterprises in the field of agriculture, construction, trade, finance, transport, etc. The profitability of these bodies are usually very low and some times negative.

On the other hand the government rarely subsidizes them officially but will provide equity capital or loans at below-market interest rates. This particularly applies to the National Housing Corporation which we shall examine in more detail later.

The Post Office Savings Bank has made good progress over the last few years after having remained fairly static for many years since independence and is becoming an important purchaser of government bonds. (see 3.2.2.). A recent savings-bond issue by this bank met with some success by offering a lottery-type premium to bond holders(and being supported by maximum publicity). Total deposits at the POSB now stand at KShs 215 mill. all from small savers from all over the country.

Insurance companies have been shifting their investments away from housing towards government stock placing their short funds on call with non-bank financial institutions where they can get the highest rate of interest. The insurance business in Kenya has bloomed over the most recent years and a couple of new companies have appeared so that Kenya now offers a fairly

---

* Cooperative Housing for Low-Income Workers - June, 1978

full range of insurance and re-insurance services. It is likely that they will be very important contributors to development finance in the future although they may channel a good deal of their money directly into commercial property development or finance companies, e.g. the Old Mutual Insurance Company have financed the new domicile of HFCK by a loan of KShs 10 mill.

External funds continue to be an important source of funds for public as well as private development projects. The amounts have already been mentioned and more is likely to come forward in the future including housing and related services. The main investors are: the Commonwealth Development Corporation, The World Bank, USAID, The European Development Fund, and the Dutch Development Fund. It is surprising that not more countries have shown an interest in the housing sector. The reasons could be many but are most likely: (1) the reluctance to use public money to invest in individually owned dwellings, (2) a reluctance to charge an interest rate commensurate with what private funds would claim in their respective countries, and (3) unfamiliarity with the mechanisms for this type of investment and the guarantees offered. The long-term nature of the investment could not be a reason since most foreign public loans are on long term and on consessional conditions. Perhaps Kenya itself is reluctant to promote the idea claiming other priorities for foreign assistance.

4.0. Housing Finance

4.0.1. Characteristics of Housing Finance in Kenya

In the monetary sphere of the Kenya economy the private and public sector have almost an equally large share of the market for housing finance. This situation has not come about by accident but as a result of government policy to intensify the provision of housing for the lower income groups which private sector financial institutions have for long neglected. The reason for this lack of interest on the part of private financial institutions is that housing finance in Kenya, has, since a few years after independence, been a "sellers market". As a result the existing institutions have been able to lend all their funds to middle and upper-middle income borrowers where there is less risk and lower administration cost per unit lent. Consequently existing institutions in the private sector have prospered and new institutions have entered the market for financing higher income housing.

Private sector mortgage finance is still a very conservative industry in Kenya. Lending rates have been kept at the 10%-12% level for a long time in spite of demonstrated returns on housing investments in the order of 25% - 30%. Corresponding to the relatively low lending rates institutions have not been able to offer more than 6% - 8% on deposits. Some non-housing finance companies have done far better (e.g. CFC) by offering as much as 11% on time deposits knowing full well that they can place funds at 18% with ease.

NATIONAL AND LOCAL FINANCIAL INSTITUTIONAL FRAME-WORK FOR HOUSING IN KENYA

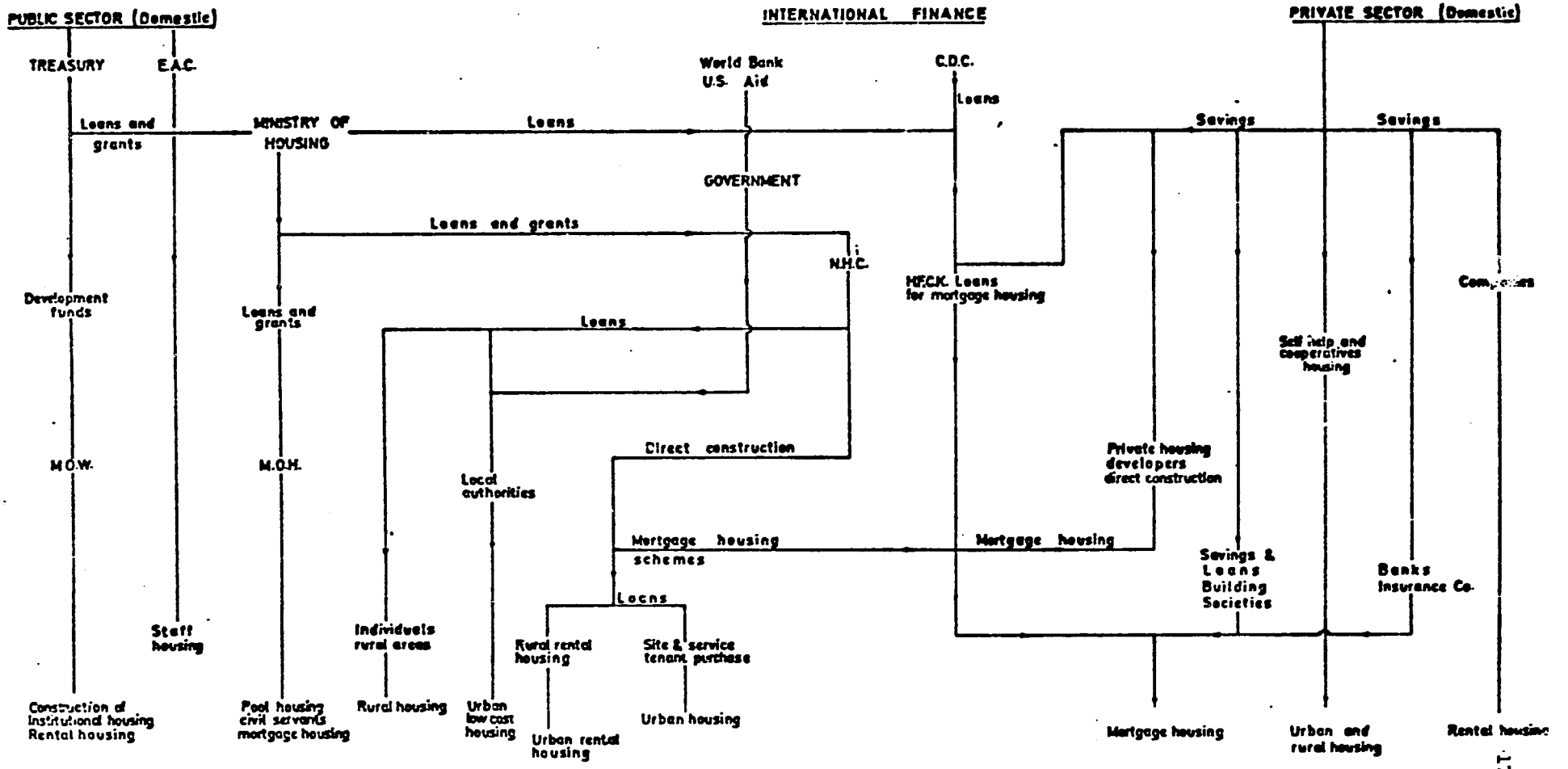

source: Ministry of Housing and Social Services

As an informative contrast it is worth noting that in some developed countries the mortgage market is much more "free". By daily trading of mortgages on the stock exchange the lending rate quickly adjusts to demand and supply conditions and automatically regulates the flow of funds to housing. In such a situation the Central Bank, of course, plays an important role in this market by buying or selling from its own stock of mortgages.

The public sector,more recently, has implemented schemes for lower income families in Nairobi (e.g. Dandora, Umoja) which in principle, are non-subsidized. This represents a major step in the direction of allocating resources to their optimal use considering that allottees gain an immediate windfall profit of upwards of 50% on their cost price, i.e. the shortage of housing is such that the market value of housing far exceeds its cost. In addition there is no profit margin for the developer (public sector) and, more importantly, allottees are offered credit terms for 90% of cost at 9% over 20 years, - something otherwise not available to this group of people.

For the private sector the above example of profitability should call for an expanded involvement, at commercial terms, since here lies a potentially very large market not only for borrowers but for savers as well. If the existing institutions are reluctant to enter this market, the public sector should take the initiative and promote "finance company type" institutions which borrow and lend at much higher interest rates and are prepared to take more risk.

In fact, allottees in these schemes all have employment and many are regular savers, others again are at the start of significant income improvements due to sub-letting and commercial activity in the new housing schemes. At the same time, of course, the cost of money and administration must be sufficiently high to cover a larger number of smaller loans. Nothing in the experience so far indicates any higher rate of default for these loans - not surprisingly at 50% profit to the beneficiary.

It is characteristic for housing finance in Kenya that the private sector has not yet responded to this challenge. The conservative nature of the financial establishment is such that it takes very strong inducements or direct government regulations to spur changes. So far, it is the public sector which has taken up this responsibility but not in the most efficient way, although it is no longer by definition a loss-producing activity.

Defaulting on loans do occur, of course, but they are mainly due to laxity in collection procedures and general inefficiency in the administration of these schemes and has little, if anything, to do with the level of income of the borrower. It is a fact, for instance, that in Mathare Valley (squatter settlement) rent arrears are almost unheard of, because tenants are "locked out" immediately if rent is not paid when due. In this respect nothing is as contagious as unchecked arrears. Apart from simple bookkeeping and clear procedures it may take more committment on the part of administrators and, above all,

proximity of administration to the projects, both physically and mentally. A Housing Development Department for a local authority is therefore only likely to succeed if it is decentralized and represented in every major housing project on a continuous basis.

4.1. Public Sector Housing Finance

The public sector's efforts in the housing field are substantial (see Table IV) and growing. Its relevance for the private mortgage finance institutions is equally important in that the government's policy, as stated in the development plan, is to channel more funds into the servicing of sites for private construction. The wisdom of this policy is clear. For the same amount of public funds spent a larger number of families will be settled by mobilizing latent resources both in terms of savings and labour from the private sector. It should be noted that the so-called self-help housing projects are, more often than not, executed by contractors hired directly by the owner, in the same way as has traditionally been the case with private sector construction for the higher income groups. In this way an unquantifiable amount of "suppliers' credit" is mobilized.

Funds channelled through National Housing Corporation rose from K£ 442,000 in 1963 to K£ 4,200,000 in 1977. They are either used for direct development by NHC or directed to local authorities and private individuals (see under 4.1.2.). In the case of local authorities most of the funds allocated are now for serviced sites or rental housing, whereas housing funds for rural area councils are intended for mortgage and tenant-purchase schemes.

Apart from financing an increasing number of serviced sites and rental and tenant purchase units through NHC, the public sector is directly supporting HFCK with funds for medium and high-cost housing (see table IV). As a shareholder the government may choose to buy out the other major shareholder in the company, CDC. Savings and Loans (K) Limited is also receiving £1,175,000 in public funds during the 1978/79 financial year to complete a medium-cost housing scheme which has encountered difficulties.

4.1.1. Ministry of Housing and Social Services

As the main ministry responsible for housing, the MHSS is obliged not only to help formulate policy, set standards and implement public housing programmes through NHC but it also is charged with the vital function of collecting data on such variables as income, construction costs, rent levels, etc., and translate these into housing programmes. These programmes in turn spell out the need for new construction by house types and geographical location and, most importantly, estimate the capital requirements over the plan period. The estimated capital requirements for the previous plan period is attached. The same projection for the new plan was not available at the time of writing, but it is not likely to vary in principle from the attached. Planned allocation of development funds for housing by the public and private sectors (1978-1984) are included as Table IV of the Appendix.

TABLE [illegible]

URBAN HOUSING NEEDS AND CAPITAL REQUIREMENTS 1973 - 1978

Household Income per month (Shs 1973 prices)	New Households in each income group during the plan period estimated % of total			Affordable gross housing cost (Shs 1973 prices)	Type of housing finance proposed	Total capital cost urban housing 1973 - 1978 (1973 prices)		
	No.	% of total	% cum.			(Shs. 000)	%	% cum.
100	10444	7.8	7.8	2000	Bldg, materials loans	10.444	0.5	0.5
100 - 149	10554	7.9	15.7	2000 - 3500	-	29.024	1.4	1.9
150 - 199	16003	11.9	27.6	3500 - 4500	-	64.012	3.2	5.1
200 - 299	26091	19.4	47.0	4500 - 6000	-	136.978	6.9	12.0
300 - 399	21419	15.4	62.9	6000 - 7500	serviced site	144.578	7.2	19.2
400 - 499	11566	8.6	71.5	7500 - 9500	-	92.528	4.6	23.8
500 - 599	6510	4.8	76.3	9500 - 11000	-	66.728	3.3	27.1
600 - 799	7608	5.7	82.0	11000 - 17000	-	103.885	5.1	32.2
800 - 999	5267	3.9	85.9	17000 - 21000	core house	99.678	4.9	37.1
1000 - 1199	3873	2.9	88.8	21000 - 25000	-	88.780	4.7	41.8
1200 - 1499	3564	2.7	91.5	25000 - 39000	-	124.276	6.2	48.0
1500 - 1999	4609	3.4	94.9	39000 - 51500	private mortgage	208.557	10.4	58.4
2000 - 2999	3823	2.8	97.7	51500 - 77000	-	245.628	12.2	70.6
3000 +	2974	2.2	100.0	77000	-	594.800	29.6	100.0
	134305					2009.896		

SOURCE: Ministry of Housing and Social Services

Three things should be noted when surveying the figures of the projections.

1. 1973 prices are used. For 1979 prices and incomes should be increased by approximately 50%.

2. A rent propensity of 20% - 25% of household income is assumed for all income groups. Reality shows a much wider "spread" namely from 10% to 40% for high and low income groups respectively.

3. Affordable gross housing cost is based on the just mentioned rent propensity plus the availability of normal commercial mortgage financing at 12% interest over 20 years, but this is an idealized situation, since this is neither an average nor a majority privilege.

These projections are not only necessary for the purpose of programme formulation but also as a yard stick for measuring the actual production.

It is difficult to get a clear impression of the number of houses built in the rural areas for what can safely be assumed to be the very lowest income groups, but it is quite certain that not all the needs were met. It is of little consequence just to quantify the shortfalls, instead, the analysis of where they occured and why is important. Since lack of finance is likely to be a major factor at all levels the ministry can then draw up position papers on possible policy changes, suggestions of incentives (or dis-incentives) for mobilizing additional financial resources both public and private, local and foreign and, of course, identify places where funds lie unspent. Local authorities are often the cause of much concern in this latter respect. (see 4.1.3.) Consistency in planning shows itself by comparing the "totals" of capital required for the two planning periods 1973-78 and 1979-84 (Tables II and IV). Correcting for inflation and population growth they correspond very closely. If the plan were to represent an ideal situation which in some respects it does, then, it ought to have incorporated some magnitude for reducing previous shortfalls.

The MHSS is also the ministry responsible for the Rent Tribunal and for implementing the Rent Control Act. As far as this activity influences housing finance it will be dealt with in the last section on "constraints". Suffice it to say that the Act, as presently administered, apparently has no effect neither on the supply nor the demand side of housing.

The attached diagram indicates the relationship between national and local institutions for housing finance in the public sector and between public and private institutions.

4.1.2. Other Direct Participation by GOK.

(a) Institutional Housing

The Central Government finances, develops and manages through the Ministry of Works, institutional rental

housing estates for civil servants working in institutions such as police, the army, hospitals, schools, etc. Planned expenditure for 1978/84 £8,307,305.

(b) Pool Housing

The Government finances, develops, and manages, through the Ministries of Works and Housing and Social Services, Pool rental housing estates for civil servants not housed in institutional housing mentioned above, and particularly those in remote areas where other alternative types of accommodation is not available. Planned expenditure for 1978/84 £3,200,800.

(c) Government Sponsored Home-Ownership

The Government provides bridging finance for the construction of mortgage houses for civil servants while loan facilities are provided by the Housing Finance Company of Kenya and other financial institutions, the main objective being to reduce to a minimum the responsibility of providing pool housing for civil servants while at the same time encouraging home-ownership. Planned expenditure for 1978/84 £3,650,010.

4.1.3. The National Housing Corporation

This agency has already been introduced in an earlier part of this report. There are good reasons for a second look at its function as the public sector's main developer and financier of housing. Over the next plan period it is to be responsible for the allocation of about KShs 500 mill.

The N.H.C. lists its various functions as follows: "The Corporation:

a. acts as an agency for transmitting loans from the Ministry of Housing and Social Services to Local authorities for the development of low cost housing in towns and to individuals in the rural areas for the development of housing on their farms and in their home areas. This is a field where private sector finance should take over.

b. provides Technical Assistance in the form of designing, tendering, and supervising construction for those local authorities inadequately staffed with the necessary technical personnel.

c. develops and manages housing estates either in order to supplement the capacities of the local authorities concerned or meet the demand for houses in areas where local authorities are not able to initiate and/or manage housing estates themselves.

d. supports and encourages the development of housing research through the Housing Research and Development Unit at the University of Nairobi.

e. undertakes to stimulate greater participation by the private sector by developing mortgage housing estates with mortgage loans being provided by Housing Finance Company of Kenya Ltd. In this way it acts as an estate developer for mortgage housing schemes which are designed to meet the demand for housing in the middle income groups of the population.

This latter part of NHC's activity has turned into high-income schemes (e.g. Kyuna Estate) which should and can be catered for by the private sector..

Through this five pronged approach, the Corporation has made some achievement in the housing sector, both in urban and rural areas, during the last ten or so years. Since the beginning of the last plan period up to the end of 1976, 5698 houses had been completed in urban areas and 2272 were in the construction stage while 20532 were at the planning stage. In rural areas K£ 766,925 had been allocated to individuals for the development of rural housing."

N.H.C. is very much aware of its failure in meeting the housing targets. But apart from the inability of many local authorities to implement their projects it is evident that the corporation is hampered in its performance by trying to do too much. Both high-cost housing estates in urban areas and individual loans for rural housing (which are mostly given to urban wage earners) are areas where N.H.C. itself recognizes the need to pull out. Instead there is a felt need for more technical assistance to councils which cannot keep up with their plan targets for housing.

When a local authority applies for a loan and submits plans for a housing scheme, the finance, though available, and recommended by N.H.C., may not be sanctioned by the Ministry of Local Government if the particular authority is in arrears with other loans unrelated to housing. Thus, the situation arises where on the one hand the money cannot be spent and the houses - planned and needed - cannot be built. At the same time the local authority cannot get the source from which it could generate revenue to repay its other committments which then tends to perpetuate the situation. On the other hand, loan sanction may have been given but the NHC cannot approve a loan because the plans or the accounts of that council are not in order. This is said to be the more typical case. NHC may choose to go ahead on its own and make the new scheme a direct NHC responsibility under the auspices of the provincial administration. However, this is an approach which the NHC is reluctant to take because it makes administrative tasks even more complicated. An effective system to cope with these situations has not yet been found and it causes large amounts of public funds to lie dormant, albeit on deposit, for long periods.

In light of the considerable profits allottees of public housing reap it is no surprise that local councils take advantage of this situation and charge more than what they themselves are charged by NHC. But the question arises whether the terms on which NHC finances housing for local authorities are too favourable, i.e. representing a subsidy. To quote the NHC: "..in order to cater for more families

from the low income groups there has been limited subsidization by government. Firstly, advances from development funds are made at a rate substantially lower than the market rate. Secondly, land for site-and-service schemes, although being charged with annual rent, is allocated free of stand premium." Loans are normally provided at 6.5% interest repayable over 20 years for tenant-purchase and 40 years for rental schemes.

If subsidies are given intentionally for the benefit of low income groups the purpose is defeated if local authorities absorb those benefits themselves. Furthermore, the government's policy is not to subsidize housing, but to use all funds allocated for this purpose to build as many units as possible.

The funds provided to N.H.C. from various sources (Dec. 1977) now stand as follows:

Loans from Central Government	-	KShs 542.320 mill
" " C.D.C.	-	KShs 1.120 mill
" " A.I.D.	-	KShs 37.500 mill

Actual development expenditure on housing and actual repayments by the National Housing Corporation to Central Government

Year	Actual Expenditure	Actual Repayments	Repayments in % of Expenditure
1973/74	£4,308,661	£1,773,914	41.2
1974/75	£4,862,397	£1,388,510	28.6

The National Housing Corporation repays annually a loan charge to the Central Government through the Ministry of Housing and Social Services. These are the actual receipts from housing. The NHC repays redemption of the loan and 6% interest. It is allowed to charge ½% overhead fee. Other Ministries do not make any repayments on their housing funds.

The last column in the table makes it clear that Central Government does not only invest in housing, but that funds from housing development also flow back into the Treasury. In the last two years for which information is available, these funds were substantial, accounting for approximately 30% - 40% of development expenditure. (SOURCE: HRDU, 1978)

The record of repayment by local authorities is very uneven with present arrears totalling KShs 8.8 mill. About 5000 individual loans for rural housing have arrearages amounting to KShs 1.8 mill as at the end of 1977. But the NHC finds it virtually impossible to cope with this latter category of loans as it is being inundated with applications and is

often unable to recover in the cases of default. A complete review of the NHC operations and organisation is scheduled as part of the so-called "Second Urban Project" financed by the World Bank.

4.1.4. Local Authorities

As stated in the previous section, local authorities vary so much in their administrative capabilities that a generalized account of their financial capacities is impossible. Two things they have in common, namely their housing shortage and their exploitation of publicly provided finance for housing. The latter goes undisputed, as if it were government policy.

The development programme for local authorities was projected at KShs 1,424,8 mill. for the years 1973/78. 40.6% of this was to go for housing. It was further planned that KShs 578.4 mill. (83%) should be channelled through NHC in the form of loans. The plan also stipulated that public housing should be financially self-supporting. It is very difficult to get reliable information on what local authorities actually "earn" on their housing schemes, because separate housing accounts are not always kept - in spite of a government circular (17/73) of April, 1973. A consolidated tabulation was made by HRDU for 1974 which shows a considerable profit.

Actual Income and Expenditure of all Local Authorities (1974)

	Actual Amounts KShs '000's	
Income		
total housing revenue collection for all schemes		57,694
Expenditure		
loan repayment made to NHC	20,955	
H.F.C.K. schemes collection (collection = assumed expenditure)	1,401	
rates (collected and transferred to General Rate Fund)	2,338	
maintenance spent	6,741	
insurance paid	439	
land rent (collected and transferred to Commissioner of Lands & Genl. Rate Fund)	343	
administration cost & bad debts	5,769*	
Total expenditure		37,986
Remainder		19,708 **

* Actual amounts are not known. The amount entered in this table is calculated according to L.G. circular 51/70 which allows 10.7% of total housing revenue to be set aside for administration and bad debts.

** In this remainder is still included an amount for fixed service charges of a few local authorities, and some rates.

(SOURCE: HRDU, 1978)

Maintenance cost figures predominantly as an expenditure item namely about 15% of rent collected. This is higher than in the private sector and either covers up for other expenditures or represents inefficiency. It also appears as the best argument for selling rental units to the occupants. Nairobi alone has over 16,000 units to maintain and spent KShs 5 mill. in 1974 on this account or the equivalent of about 200 low-cost houses.

The report by HRDU "Local Authority Housing in Kenya" (March, 1978) from which most of the information was extracted gives a number of specific recommendations on the improvement of housing finance to local authorities as, indeed, for many other aspects of this important area. The recommendations are contained in the appendix.

4.2. Private Sector Housing Finance

Funds for housing in the private sector come essentially from three sources: (1) financial institutions, (2) employers, and (3) private individuals who, in some cases, form themselves into companies or cooperatives.

The financial institutions engaged in mortgage lending are either registered under the Banking Act, the Companies Act, or the Building Society Act. Whereas commercial banks do a very limited business in housing finance some institutions registered under the Company Act lend solely for housing. Only one institution, the East African Building Society, is registered under the B.S. Act and is by definition a non-profit institution. Again others combine housing finance with other types of finance. Characteristic for all of these institutions is that they have been doing extremely well over the last decade and appear to be continuing with their success.

The considerable expansion of mortgage lending in 1977 - 1978 of KShs 117.8 mill for the three major institutions has brought the amount of their loans outstanding to very nearly the Shs 1,000 mill. mark - a new high in Kenya. In spite of - or because of - this expansion in lending terms (most institutions having now increased their "loan ceiling" to Shs 500,000) has not resulted in a sufficient number of new houses being constructed - not even for the high income demand. Thus, prices and rents continue to go up in many cases faster than the general price index of consumer goods. A couple of institutions are engaged in their own development projects, namely HFCK and EABS (through Akiba). These are noteworthy schemes for the medium income-groups and all extremely successful. The comments on the individual societies should be read with reference to tables where their latest vital statistics are summarized.

4.2.1. Housing Finance Company of Kenya

The Company was incorporated in Kenya in 1965 as a partnership between the Government and Commonwealth Development Corporation which took over the assets of the First Permanent (E.A. Limited and Kenya Building Society Limited. First

Permanent (E.A.) entered the Kenya scene already in 1950 and Kenya Building Society in 1949. Both institutions lent mainly to expatriates and landed in severe difficulties when, after the Lancaster House Conference in February, 1960, it became clear that Kenya was on its way to Independence. This caused a "run" on deposits and property prices tumbled to the extent that many good loans turned bad. Both of the institutions borrowed heavily from CDC to weather the storm - so much so that they were eventually absorbed by it. In turn HFCK has shown its capability to successfully place large amounts of CDC funds in new housing developments. In terms of total amount of mortgage loans outstanding KShs 387 mill., HFCK is the largest institution of its kind, but a large part of its funds are from CDC and the Kenya Government. Measured by its reserves and deposits (shares and savings) from the public it is second to EABS. A total of Shs 70.9 mill. was used for granting 725 new mortgages in 1978 of which 104 were for existing houses, 66 for new, individually built units and 555 units in new estate developments.

HFCK has become associated with lower-middle income housing through its involvement in the Buru-Buru estate near Nairobi, but it is also prepared to offer loans of up to 90% of cost which greatly helps those on the lower levels of the income scale. HFCK is represented in Mombasa and Nakuru.

4.2.2. Savings and Loans Kenya Limited

This institution is one of the oldest in Kenya and its history is characterized by ups and downs. Before independence, it was doing very well, but during the slump in 1960 - 1964 it was taken over by Pearl Insurance Company Limited which decided to get its invested money out of the company. Although it was, at that time, the largest of its kind, it virtually stopped lending and deliberately scaled down its operations.

A few years ago, S & L was taken over by Kenya Commercial Bank which has revived it as its mortgage outlet, but as a separate company. It is now the smallest of the three housing finance institutions, but more profitable, relatively speaking, than HFCK. A total of Shs 32.8 mill. was used for granting 140 new mortgages in 1978 of which 88 were for new and 52 for existing properties. S & L prefers to lend to private developers for medium cost housing and is only represented in Nairobi.

4.2.3. East African Building Society

As already mentioned the EABS is unique by being the only institution registered under the Building Society Act. This requires it to be a non-profit institution and to make its revenue and expenditure items public in much greater detail than is required by the Finance Companies. On the other hand it is compelled to keep substantial reserves and not to be a property developer. But the EABS is also unique in the sense that it survived the pre-independence slump through support from its members and by a permission by the registrar general to suspend

with the regulations regarding reserves and dividends for a year until it was back on its feet. This is now very much the case. In fact EABS has had a remarkable rate of growth with assets now totalling more than KShs 300 mill. This achievement should be seen in the light that EABS has not had the "sponsorship" of the Government and CDC as in the case of HFCK nor of a large commercial bank as in the case of S & L. EABS is still associated with the higher-cost housing in spite of the fact that through AKIBA it has financed large numbers of lower-middle income housing both in Nairobi and Mombasa. In 1978 a total of KShs 74,7 mill. was used for granting 252 new mortgages of which 82 were for new and 170 for existing houses. Loans are rarely granted for more than 70% of cost but EABS has made a special effort to lend in other towns than Nairobi and Mombasa where it has branches.

As in the case of HFCK it appears that AKIBA also has the ability to get land, construct and manage large housing developments efficiently.

4.2.4. The Cooperative Bank of Kenya

The Cooperative Bank of Kenya has very recently registered a Finance Company in order to offer mortgage loans to its clients who are all cooperative societies mainly in the agricultural sector.

The Bank has found that those who utilise the normal banking loans for construction purposes are hard put to repay in five years. Moreover, the Bank felt that a number of credit unions (also registered as cooperatives) were primarily aimed at helping members raise funds for housing and should be assisted in this effort. The new company has not started lending yet, but prospects should be good. It is also fair to say that registering under the Companies Act has the added advantage of allowing other kinds of financing apart from housing. The Cooperative Bank has in mind to also finance such construction schemes as storage facilities and work-shops.

4.2.5. Kenya Commercial Bank (Farmers' Housing Loans)

KCB is singled out among the commercial banks because it has recently launched a special loan scheme for farmers' housing. The idea was to encourage housing in rural areas. The main feature of the scheme is that rural branch offices can grant individual loans of up to KShs 70,000/- at 9.5% interest over seven years. The loan can only be given on the basis of a first charge and the borrower must have contributed to the cost by 25% i.e. a maximum loan of 75% of cost or value. Even though materials and/or existing buildings can be accepted as part of the self-finance, land cannot. With monthly repayments of KShs 1,144/- for maximum loans plus inspection and insurance charges this becomes a very heavy committment for most farmers. From information gathered it appears that these loans are not popular in spite of much publicity and the availability of

a set of standard design drawings for a "good" farmer's house from the bank (for a fee of KSns 500/-).

4.2.6. Terms and Criteria

It is clear that a certain uniformity prevails among the three main institutions when it comes to terms and criteria for loans and deposits. This state of affairs is a result not only of market forces but a certain amount of unofficial communication between the respective managements. There is nothing sinister about this. It helps create an orderly market and there is no obligation for any one of the institutions to comply with suggestions or actions by the others.

Typically, then, the institutions will advance between 60 - 90% of the cost or value (whichever is less) of a house to which there is a clear title. If the property is lease-hold the lease should run at least 10 - 15 years after the loan has been paid off. Normally, loans have a maturity of 15 - 20 years.(see Table V of the Appendix.)

The maximum loan is now normally Shs 500,000 and this is given only if the borrower's present income would justify such a committment in terms of his/her ability to repay. The rule of thumb in the business is that the monthly payment (redemption + interest) should not exceed 25% of the borrowers monthly income. In some cases the wife's income will be taken into account, but not normally by more than 50%.

An interest differential of 3% - 4% compares favourably with those applied by banks and other finance companies, which are nearly twice as high. Two factors explain this difference, one is the few large loans in mortgage finance, the other reason is that there are, as a matter of fact, very few defaulters. Where they do occur they hardly ever result in a loss to the institution, (at most some extra work). This is due to the conservative lending policy and the constant appreciation of property in urban Kenya over the last 15 years. It should be noted that valuation, legal fees and consolidated charges connected with the loan, usually amounting to one percent of the loan sum, has to be paid in advance.

With an almost cronic shortage of deposits there has been some effort to encourage additional funds to be mobilized for housing. Pension funds and others with larger sums to deposit can negotiate special interest rates. Longer-term deposits, even from smaller savers, have been encouraged by recent increases in interest rates. At the same time an effort to support specifically new construction for owner-occupation has been shown by some institutions through offering a longer term to pay, a slightly lower rate of interest and a larger proportion of the cost to be financed. (20 years, 11% interest, 90% advance)

This trend is in line with government policy and is also geared to attract the large and rapidly growing market of

young, educated upward mobile Kenyans who will be the mainstay of these institutions' future business.

A lesson to be learned from Hire-purchase finance houses is that small loans give more work per unit lent and are therefore expensive. The same form of lending may have to be applied to housing, indeed, where there are no clear titles (e.g. rural areas) this may be the only way funds can be advanced. Legislation governing H.P. financing is clear and comprehensive.

4.2.7. Profitability and Operating Costs

The similarity between the institutions in type of business, terms and conditions for mortgage lending seem to disappear when their operating costs are compared.

It is difficult to document the cause of the differences, because only EABS itemizes its cost. At the same time "profits" for EABS are not comparable with the others, because more than half of its funds come from investment and savings shares which are credited with "profits": these are similar to the dividends paid on the share capital of the other two institutions which only have a very small share capital. In brief, then, if all external funds can be earning an average of 8% interest (dividend) the institutions can be said to be profitable. For the record: in 1977 HFCK paid 10% on a share capital of Shs 6 mill. EABS paid 8% on investment and savings shares of Shs 139 mill. and Savings and Loan paid 25% on a share capital of only Shs 2 mill. Judging by the amount of tax each institution paid, between Shs 2 - 3 mill., they must have been about equally successful. (See Table VI of the Appendix)

But since EABS can be assumed to be typical for its kind of operation the table below lists its major operating costs in % of total mortgage loans outstanding, viz. Shs 153,713,374.

(K. Shs 000)		Total in % of Mortgage Assets
43.2	Directors fees	0.03
2776.1	Remuneration to staff incl. Executive Director & Auditors	1.81
726.5	Payment for Directors pension	0.28
49.8	Staff Medical Expenses	0.03
47.9	NSSF Contributions	0.03
287.3	Printing & Stationery, Postage, Telephone	0.18
447.1	Advertising	0.29
78.6	Travelling	0.05
16.2	Bank commission & charges	0.01
195.4	Vehicles running & maintenance	0.13
30.6	Legal & Professional Costs	0.02
563.2	Rent, rates, insurance, repairs, lights, water	0.37

(KShs 000) cont'd		Total in % of Mortgage Assets
87.2	Office Equipment, up-keep	0.06
106.9	Office tea, entertainment and allowance	0.07
42.6	Donations	0.03
151.4	Miscellaneous, staff, training, subscription, etc.	0.10
5350.1	Total (excluding interest and dividends)	3.49
436.3	Depreciation on furniture, equipment & autos	0.19
8133.4	Interest on deposits + borrowed funds	5.29
11150.7	Surplus to investment + saving shares	7.25

The above should give a fair impression of the relative magnitude of cost items. Economies of scale are quite considerable in the finance business and it can safely be assumed that expansion of lending activities will bring the cost/asset ratio down to near 2.5%. The fact that there is a tendancy towards "estate development" finance is also explained by savings in cost and time.

Contrary to what would have been desirable there is no indication that savers of long standing take preference in allocation of estate houses, nor is owner-occupation made a condition. In fact, as in public housing schemes, the majority of houses are acquired for investment purposes and with returns of about 20%. Considering that 70 - 80% of the investment is made with a loan costing 12% at most, boosts the real return to about 40%.

4.2.8. Employers' Housing Finance

Several large employers in industry and agriculture make considerable contributions to staff housing. The total sum invested in this way is difficult to ascertain but it most often takes the form of the purchase of existing or construction of new houses for company ownership. In a few cases mortgage finance is obtained to supplement the employers' own funds but normally these projects are self-financed. The drawback to this important supply of dwelling units is the loss to the occupant of his house when he leaves the employment of the owner.

It has been discussed in another report how Kenya Canners Ltd. in Thika attempted to make occupants owners but changed its plans when complications over external finance developed. However, the value of home ownership is too important to

relegate to accident even if - or particularly when - large private investments in housing are at stake. The new development plan emphasizes encouragement to employers' efforts to provide more housing. This can most conveniently be done by allowing employers the right to subtract housing contributions from their taxable income and to assist workers in organizing housing cooperatives to construct and manage workers' housing. We shall elaborate on this point below. Another approach is to assist staff with housing finance offering a guarantee for a mortgage loan from a financial institution.

4.2.9. Housing Cooperatives

Among the more informal ways of raising finance for housing the cooperative society is an obvious but, so far, under-utilized organisation in Kenya. Housing cooperatives exist - about 20 of them - and some of these are old and have done very well. However, in post-independent Kenya emphasis has been on agricultural cooperatives which have received the lion's share of technical assistance through the Ministry of Cooperatives. Very little attention has been paid, until very recently, to housing cooperative societies. Of the existing housing societies only a handful have actually built houses. None of them have defaulted on loans taken but a couple of them have had endless trouble of maladministration and other irregularities. There is no question of their ability to afford the houses once they are built; the problems are clearly of a technical nature which can be greatly reduced if a technical service organisation is established for this purpose, as proposed in the recent report mentioned under 3.2.4. This organisation would assist with land acquisition, design, tendering, maintenance and administration.

The Cooperative Bank (see above) is well suited to provide long-term finance for these societies and should be encouraged to do so by placing N.S.S.F. funds with it for this purpose. Self finance would come through individual savings, loans from a credit union or from collective work on the cooperative's dwelling units.

For rural areas the cooperative farm provides the collective security which can substitute for the often non-existent title deeds or the sub-by-law building standards and the traditional reluctance to repossess someone's house.

4.2.10. Housing Companies

The best known informal way of raising money for housing in Kenya is to join a housing company. This form of organisation is prevalent in many squatter settlements. Their membership, their funds and their houses cannot be quantified but are all substantial enough to justify a special mention. Documentation on housing companies in Mathare Valley can be found in a publication by the Housing Research and Development Unit of the University of Nairobi.

The reason people form companies rather than cooperatives is partly that power lies with the majority shareholder(s)

and partly, that reporting and control (as opposed to assistance) is much less for companies. Of more recent date is the Civil Servants Housing Company which is building very attractive medium cost housing for their members in many parts of the country. At the other end of the scale are a number of housing groups which have been formed in the large Dandora site-and-service scheme just outside Nairobi, largely through the action of the Housing Development Department. Even less formalised are the small (10 - 20 people) groups which save up to Shs 100/ per month per person and with the lump sum being given to each member in turn. Money raised in this way is typically used for construction in rural areas.

5.0. Constraints on the Expansion of Housing Finance

5.1. Supply Constraints

This section will attempt to point to some of the limitations to the expansion of the flow of funds into housing, particularly those which - in the opinion of the team - it is possible to do something about.

The basic assumption is that not all funds should nor can be allocated for housing. The areas of concern are therefore those where housing resources are presently being used for less than their optimal social return and where they are dormant. We shall therefore take present income levels and distribution as a given, but point out that housing by itself is an important catalyst in generating more income and that house ownership has been demonstrated in Kenya as in many other countries to be perhaps the most important factor in the redistribution of income, certainly more important than personal income taxation. It is for this reason that the team is concerned with the proper allocation procedures and safeguards for their implementation. If houses are not owned by those for whom they were intended - and here the policy is clear - then a shelter problem may be solved (partially) but the income distribution benefits will have been lost in fact the problem may very easily have been aggravated.

Income is, after all, the prime mover of savings and investment, and it has been demonstrated in many countries that a family, even of low income, is prepared to save substantially if the prospect is home ownership. One of the constraints on the supply of deposits, in our view, is the absence of institutions which will not only accept the savers money, but also give him/her a reasonable prospect (not promise) of obtaining a loan for a house, whether publicly or privately built. In Kenya the National Housing Corporation and local authorities give loans to individuals but do not accept their deposits. Housing finance institutions accept anybody's savings but will only give loans to a selected few, - not of the lower income groups and not unless there is a registered title and then, only on a first mortgage. Furthermore, neither of these institutions are geographically well represented.

The housing cooperatives, if they are given the proper support, may be the best suited avenue for reaching the lower income groups in rural as well as in urban areas. This leads to an observation on the lack of secondary lending. The cooperatives may have access to long term finance from the Cooperative Bank, but there is need to assure the Coop Bank of sources of long term deposits. This goes for the other private housing finance institutions as well. Hopefully the use of NSSF funds for this purpose will soon be a reality. There is, by the way, no danger that such NSSF funds as have been proposed for housing investments will be taken away from more important uses since NSSF holds stock in public companies such as Breweries and Tobacco to a much larger extent than is envisaged for its housing investments in the initial five years.

The absence of discount facilities for mortgages by the Central Bank is another secondary source of finance which can be developed. It would seem to be very much in the public sector's interest to be able to influence the flow of funds into housing from the private sector, rather than to have to control it. As a general rule it is much more simple to administer investment flows by incentive/disincentive than by regulations. Moreover, the public sector has a duty to create the "right" climate for private construction of housing, so that development plan targets can be reached.

Moving again to the primary level of finance, it should be evident that if there is such a shortage of deposits, a higher interest on savings should be offered. Conversely, if there is always a queue for loans, a higher interest rate on mortgage loans should be asked. This may not be as simple as it sounds, but whereas the institutions could still maintain their interest spread they may be engaging in a so-called interest war, which ultimately would bring all the institutions in line again at a higher level. Two things can be said to this. First of all, if stabilized at a higher level they would effectively be competing not with each other but with investments of a lower yield. Secondly, it will spur additional savings from small savers who are facing an inflation rate of between 10% - 15% and cannot see the use of saving much at an interest rate of 6% - 8%, and therefore spend instead. Finally on this point, given the returns on housing investments clearly being demonstrated in Kenya there is no reason why the public sector should lend at subsidized rates of interest, - unless it were in rural areas where returns are not nearly as high, if they can be fairly calculated at all.

The argument for selling most, if not all, of the publicly owned rental units in order to generate more housing funds has been explicitly made in the chapter on public housing. Funds now wasted on excessive maintenance costs - partly because tenants are not as careful as owners and partly because maintenance operations seem extremely inefficient - could be reinvested directly in new housing and not even

the overall employment figure would suffer. Funds tied up in rental housing could be freed at a much faster rate than now, because occupants are likely to accept a higher monthly payment if they were building up equity rather than paying rent. From the local authorities point of view present rent payments would be acceptable because it still saves them the maintenance expenses. The same argument can be used for many tenant purchase schemes, where the local authority has the maintenance responsibility even if they,in certain cases,pass the cost on to the tenant-purchaser. The administrative burden of implementing the tenant purchase regulations is so great - and the results so poor - that these units may as well be sold out-right on a 95% mortgage, which is effectively how the allottees practice the arrangement. This again could free more funds for housing at no expense to other uses by the public sector. To supplement the above arguments a system of rebates could be introduced to encourage early repayment of loan committments. This would benefit both the borrower and the lender.

5.2. Demand Constraints

It appears almost as a paradox that there should be problems with demand for housing finance in Kenya. However, demand, as opposed to need, is constrained by eligibility of persons for any kind of housing finance. It is of no use advocating housing for low income groups or for those in the poorest of housing conditions if they are effectively excluded on the grounds of income, location, housing standards, deposit, repayment terms, security, length of residency, etc., etc. Many of the prerequisites are well intentioned, but tend to work against those most in need of improved housing. The question of standards has been discussed elsewhere in this report. Standards have a direct bearing on cost and on "security" for the loan. We shall highlight two major constraints connected with housing finance, namely income and repayment terms. These two constraints, in turn, have bearing on the cost and security constraints.

6.0. Recommendations

Expenditure for housing has been demonstrated time and again to be related to income. There is nothing strange in this fact, - what is strange, however, is that only a few countries in the world have drawn the logical consequence of this and tied repayments on mortgages to income over time. In Kenya, as in most countries, a rough 20% - 25% of present income is used when judging a person eligible for a loan. Future income is rarely included, though half the income of the spouse is sometimes included in the income criteria. Lately some potential income from sub-letting of public housing has been included by 10% (see USAID Project 003 and the World Bank's Second Urban Project). In some Latin American countries where inflation is very high all balances of loans and deposits are adjusted periodically, but this is different from what we have in mind here. Instead of the common fixed annuity

which, particularly in times of inflation, puts borrowers at a gross disadvantage initially, a progressive repayment schedule could be offered. This system, also known as a low start or variable payment mortgage, has been tried successfully in Israel and in some Scandinavian countries and is now being started in the U.S. The public sector is possibly the most obvious to introduce such as a system. The advantages of the system should be evident, the disadvantages are said to be a slower return of capital, but this only holds true in the early years of the system, and even here the previously mentioned rebates on early repayment will counteract this tendency.

The NCC has in fact decided to introduce this system on an experimental basis in the Second Urban Project. Tables now exist for easy computation of individual loan repayments and the borrower can be supplied from the start with the entire schedule of payments he has to make over the period of the loan. See illustration on the following page.

The rebate system ought also to be an option for the large deposits required in private mortgage business and in the allocation of NHC houses. An alternative system could be to charge higher interest on larger loans, as practised by the National Housing Bank of Brazil and others. Progressive repayment systems allow the same borrower to take a larger loan (build a better house) or make the same type of house affordable by a lower income group. This approach, then, could be a major contribution to get away from the classical dilemma of having to constantly reduce standards (costs) in order to make the housing units affordable by the income group for whom they were intended.

The discussion of lowering standards is made the more obsolete by the documented income increases of allottees as soon as they take possession of the house, - whether they live there or not. This brings up a point of administrative significance. Since contracts for tenant-purchase houses as well as for lease-holds on site-and-service plots in Kenya all stipulate owner occupancy at least in part of the dwelling there is clearly a breach of contract in many, many cases. The culprits are never prosecuted and the system only makes fun of all those who take contracts seriously. This is not satisfactory. It would seem more reasonable to do away with this clause altogether or ask those who sub-let to make an extra substantial repayment on their loan in order to generate more funds for hew housing. Alternatively, the local authority could empower itself to simply collect whatever rent is paid by the sub-tenant(s) until the loan is paid off.

Security for loans is always a "hot" topic in housing finance circles, less so in public than in private housing finance. The reasons are easy to understand, the present dogma less so.

The current value of the house is most often determined by its discounted rent value. For low-income housing this

criteria is rarely used by private financial institutions. Instead, its construction cost is considered and 60 - 75% of this amount is proposed for lending. If the rental value had been used the new owner or builder would be able to borrow a larger part of the construction cost and the loan would still be amply secured. The current income criteria has already been mentioned as a misleading criteria and the availability of an unemcumbered title deed narrows the hole which potential borrowers must squeeze through.

Not only are second mortgages virtually not available, but if they were, say from a previous owner, the first mortgagor would have to approve it, though his security is in no way hampered by this transaction.

In rural areas, particularly, the security question becomes almost absurd. Assuming that a registered title deed is available, which is often not the case, the lending institution might find that upon default on the loan there is no buyer for the house, or that the owner's friends are the only ones who will bid for the house and at a ridiculously low price at that, - only to turn the house over to the original owner. Such is the tradition in many parts of Africa and a satisfactory approach has yet to be worked out to this kind of situation. Collective security may be one way. A cooperative society or group of persons with a common bond may accept this condition for being granted a loan. Such a group will also be in a better position to judge whether an individual member's difficulties are genuine or not and take appropriate action. Extension of new loans to any member of the group would then depend on the collective repayment record of the original funds borrowed. Guarantees, sureties, liens, etc are also ways of making the borrower more committed to repay, and would thereby remove some existing constraints on effective demand.

The whole problem area of public housing finance, sources, terms and security ought to be reviewed in the light of findings from recent surveys, including this report. Specific financing schemes should then be developed to bring public housing programmes in line with government policy and, equally important, simplify procedures to make administration of the schemes less burdensome and more fair. USAID HG projects are of significant size to be a vehicle for such an evolution. With respect to NHC there is no evidence that financing terms or procedures have changed because of the HG project. Administratively the burden was increased by difficulties in selling the houses. With respect to NCC the financing terms offered landed the negotiators in the classical dilemma of having to accept reduction in standards in order to reach the so-called target group in spite of expected and already demonstrated income changes for allottees in such schemes. Two positive things can be identified in the NCC approach. There were in principle no subsidies involved although in practice rates were reduced below the normal level. Secondly, a 10% income increase from sub-letting was allowed for allottees, which avoided another reduction in standards or number of units provided.

Instead it lifted the average income for the target group, - which was already too high.

These dubious achievements in the field of financing should not distract from the fact that other impacts were made on such areas as total housing supply, low-cost housing, large scale construction experience and new selection procedures. However, if the implementing agency has no incentive to change present systems or are doubtful as to what changes are most appropriate then the funding agency has a major contribution to make by providing this assistance.

Another of the administrative burdens, which has ceased to have much meaning is the Rent Restriction Act including the administration of the Rent Tribunal. Not that these instruments were not well intended, but with time they have lost relevance to reality. If they are to have any significance in present day Kenya, they must be basically altered. There are already legislative texts in circulation in the MHSS for such a revision. Unfortunately none of the new proposals are likely to alter much other than raising the rent amounts to bring them more in line with the present rent level. This is hardly enough. One basic question regarding rent control, which hasn't worked for long in many countries, is: will it reduce the flow of funds into housing? A second equally important question is: will it effectively reduce the present rent structure in Kenya, - or prevent it from rising? - at least not more than the act allows? The answers to both of these questions will depend on a thorough analysis of similar systems elsewhere. The question of how it will be implemented and at what cost is naturally tied up with the latter of the questions above and the answer is likely to be: very expensive if it is to be implemented effectively and fairly. Still, the issue deserves a proper investigation and discussion. So does the issue of how employers can be encouraged to invest more funds in housing which will eventually be owned by their workers.

On the question of fiscal measures the problem is again one of bringing these in line with government policy and making them easier to administer. For instance, it is difficult to justify an allowance of interest paid on mortgages for private housing to be deducted from taxable income without adding an element of income represented by saved rent for owner occupiers. In present circumstances of high values of both of these items this kind of legislation amounts to a substantial subsidy for house owners.

Tax on land has already been discussed. In some countries legislation provides for a higher tax on undeveloped than on developed land in order to reduce speculation and encourage development.

Finally, the cost and benefits of subsidies should be resolved so that the approach to both the definition and justification of some subsidies can be differentiated to fit present realities. The amounts and sources must be specified and the means and the beneficiaries identified. This and several other questions still need to be answered.

ECONOMIC INDICATORS

	1971	1972	1973	1974	1975	1976*	1977*	1978*
1. National Accounts: (Sh Million)								
Gross Domestic Product (Current Prices)	12,745·80	14,447·00	16,716·00	20,342·60	23,343·00	28,581·60	36,653·40	
Gross National Income	12,363·00	14,165·80	15,881·60	19,496·60	22,575·00	27,489·60	35,239·40	
2. Manufacturing Production Index (Base Year: 1972=100)	95·2	100	114·5	121·0	121·0	143·0	165·0	
3. Population ('000) (Mid-year estimates):**	11,671	12,067	12,483	12,912	13,399	13,847	14,337·00	14,856
4. Reported Employment:								
Numbers ('000) (Mid-year estimates):**	691·2	803·7	656·8	958·4	950·0	1,009·8	1,063·8	
Earnings (Sh. million)	3,762·00	4,136·00	4,622·00	5,485·00	6,246·00	7,592·00	8,628·00	
5. Prices:								
(a) Average Gross on-Farm Prices for Crops: (Sh. per 100 kg.)‡								
Coffee	636·46	778·92	920·70	1,007·84	1,068·60	2,524·00	3,960·00	
Tea	650·47	601·40	592·68	720·62	807·84	1,056·93	2,149·00	
Sisal	67·78	90·37	191·28	424·00	323·00	324·00	282·00	
Pyrethrum Extract	35,699·97	39,617·65	41,536·28	43,393·04	44,652·34	49,200·00	57,900·00	
Maize	33·33	38·89	38·89	46·43	69·79	77·00	89·00	
(b) Foreign Trade Indices: (1972=100)								
Imports	89	100	119	178	225	261	281	
Exports	90	100	115	152	175	238	337	
Terms of Trade	101	100	97	85	78	91	120	
(c) Consumer Indices (Jan./June 1975=100)								
Upper Incomes (December)	70·6	73·9	85·1	93·3	109·3	117·7	134·7	145·1
Middle Incomes (December)	68·0	70·8	79·5	91·3	105·1	114·9	130·4	141·0
Lower Income (December)	68·5	70·6	82·2	[illegible]·4	108·2	118·0	142·8	162·3
(d) Nairobi Stock Exchange Index (January 1971=100) (December)†	242·00	237·20	227·70	175·7	206·20	227·2	390·1	426·7
6. Motor Registrations: New and Second Hand Vehicles	18,813	18,169	16,474	17,225	15,988	16,246	22,278	
7. Building Plans approved by Nairobi City Council (Sh. Million)	293·08	332·26	389·94	408·18	491·96	395·08	849·08	1,164·80
8. Freight Handled:								
Mombasa ('000 Metric Tons Dead Weight)	6,338	5,922	6,724	6,522	5,948	5,913	5,972	
Nairobi Airport ('000) kilog.	19,402	25,933	28,302	30,941	33,598	33,692	34,378	
9. Visitors and Persons in Transit ('000)***	400	428	388	380	386	424	344	
10. Domestic Credit (End-year) (Sh. Million)††	2497·9	3,018·9	3,658·1	4,953·7	6,163·1	7,353·2	9,078·6	12,272·2
11. Money and Quasi-money (End-year) (Sh. million)	3,769·5	4,295·1	5,356·1	5,819·3	6,814·1	8,454·7	12,703·2	14,117·8
12. Government Budget (July–June) Sh. Million								
(a) Current Revenues	2,480	2,832	2,980	3,819·56	4,532·92	5,393·42	6,411·12	
(b) Current Expenditure	2,226	2,574	2,792	3,254·06	4,147·54	4,935·40	5,701·58	
(c) Development Expenditure	910	1,038	1,237	964·60	9,239·10	1,485·08	1,720·08	

*Provisional.
**Annual figures based on mid-year estimates
‡Annual Averages.
†As at latest date, where end-December figures are not available.
***Based on departure figures. From 1968, figures include Inter-East African movements.
††Domestic Credit = Central Bank and Commercial Banks' loans, discounts and local investments.
Sources: Central Bureau of Statistics, East African Statistical Department, and Central Bank of Kenya.
—Figures not available.

PRINCIPAL INTEREST RATES AS AT 31st March, 1979

	Rate %
CENTRAL BANK OF KENYA	
1. Rediscount Rate for Treasury Bills	7·0224
2. Advances against Treasury Bills	6·50
3. Bills and Notes Under Crop Finance Scheme	
—Discounts	7·50
—Advances	7·00
4. Other Bills and Notes	
—Discounts	7·50
—Advances	7·50
5. Advances against Kenya Government Securities	7·50
KENYA COMMERCIAL BANKS:	
2. Deposits	
(i) Time (a) Minimum 30 days (7 days' notice)	
—Sh. 200,000 up to Sh. 500,000	5·125
—Sh. 500,000 and over	5·125
(b) 3 to less than 6 months	5·125
(c) 6 to less than 9 months	5·375
(d) 9 months and up to and including 12 months	5·625
(e) 12 months and over minimum Sh. 100,000. to Sh. 250,000 maximum	5·875
(f) 12 months and over minimum Sh. 250,000	Individual Banks free to determine rate
(ii) Savings	5·00
2. Loans and Advances (minimum)	(free)
OTHER FINANCIAL INSTITUTIONS:	
1. Kenya Post Office Savings Bank	
—Deposits	5·00
2. Agricultural Finance Corporation	
—Loans (AFC)	9·50
GMR**	10·00
3. Hire Purchase Companies and Merchant Banks	
—Deposits (various periods)	6·00–8·75
—Loans	10·00–12·00
4. Building Societies†	
—Deposits (various periods)	6·00–8·50
—Loans	8·00–12·00

†Includes Institutions not registered under the Building Societies Act, but whose primary function is to finance the purchase of property
**Guaranteed minimum return.

RECOMMENDATIONS

a. It is recommended that a policy decision is taken by the Government as to the use of a possible potential surplus on housing operations, whether this surplus is to be re-invested in housing or to be used to finance other services.

b. It is recommended that the Ministries of Local Government and Housing and Social Services introduce a housing accounting system for the Local Authorities. Such system should consist of a separate administration of housing revenue and expenditure, tied to an auditing system which reports by exception.

c. It is recommended that the Local Authorities make use of the sanctions they are allowed to apply e.g. sale of property, in order to recover bad debts on tenant-purchase and site and service schemes.

PRIVATE FINANCIAL INSTITUTIONS

Analysis of Recipient and Type of Security for Loans

Sh. Million

Quarter Ended	PUBLIC SECTOR					PRIVATE SECTOR				
	Hire Purchase	Mortgages	Otherwise Secured	Unsecured	Total Public Sector	Hire* Purchase	Mortgages	Otherwise Secured	Unsecured	Total Private Sector
1970 June	—	8·94	0·04	—	8·98	78·66	118·28	46·54	5·96	249·44
September	—	9·70	0·02	—	9·72	84·46	116·74	49·92	2·20	253·32
December	—	8·98	0·02	—	9·00	82·48	121·72	60·00	0·64	264·84
1971 March	—	—	1·96	—	1·96	96·06	141·04	59·84	1·12	298·06
June	—	—	1·58	—	1·58	103·42	149·94	103·14	1·50	358·00
September	9·10	0·08	1·52	—	10·70	94·84	148·48	119·94	2·66	365·92
December	—	10·82	1·52	—	12·34	99·04	93·84	70·86	2·82	266·56
1972 March	—	11·62	1·38	—	13·00	99·64	165·60	55·88	58·42	379·54
June	—	11·90	12·26	—	24·16	100·40	181·72	74·50	46·38	403·00
September	—	12·76	4·06	38·00	54·82	93·88	206·50	82·20	54·32	436·90
December	—	13·10	3·18	36·80	53·08	86·12	216·22	112·38	24·26	438·98
1973 March	—	13·86	0·88	34·00	48·74	81·16	247·28	130·74	15·22	474·40
June	—	11·40	21·60	—	33·00	94·74	266·88	110·76	1·14	473·52
September	—	14·26	21·02	—	35·28	104·28	280·74	120·64	1·16	506·82

NEW SERIES

	Sectorial Analysis of Credit Allocations to Private Sector									
	Agriculture	Manufacturing	Building and Construction	Housing	Trade – Export	Trade – Import	Trade – Domestic	Other Business Enterprises including Professional Partnerships	Personal	Total
1973 December	42·94	35·78	50·56	248·14	8·57	25·44	29·20	141·34	110·74	693·69
1974 March	60·39	46·93	58·61	276·72	13·49	30·54	21·67	153·82	111·38	773·35
June	68·16	54·47	63·17	301·17	12·37	30·94	22·38	184·82	122·54	859·99
September	64·55	52·35	62·54	306·84	9·46	36·84	23·00	182·99	118·48	857·05
December	32·23	40·18	52·62	342·89	2·71	10·02	47·60	165·93	136·73	830·92
1975 March	65·14	55·43	64·34	356·65	0·15	51·81	6·77	129·08	134·66	854·03
June	72·05	68·06	39·32	374·71	7·57	41·75	29·68	152·79	161·34	947·87
September	68·23	68·43	35·15	398·80	11·53	31·99	69·05	121·08	163·52	967·78
December	77·52	69·05	25·80	425·56	13·20	38·17	72·32	118·15	194·44	1,034·41
1976 March	71·29	77·57	139·29	344·62	5·31	31·25	89·80	197·77	198·23	1,155·13
June	69·03	80·06	164·41	365·27	6·28	45·43	96·66	192·15	202·75	1,222·04
September	76·43	91·92	175·31	382·52	6·79	49·24	88·47	184·76	232·62	1,288·06
December	95·75	119·06	189·34	388·28	19·69	52·65	109·58	187·91	247·17	1,409·41
1977 March	92·92	120·10	203·77	393·95	20·27	60·63	114·47	211·08	277·14	1,494·31
June	94·90	142·87	222·00	409·08	20·61	113·87	88·40	226·38	297·61	1,615·72
September	100·19	150·56	248·83	414·11	20·61	87·43	93·74	227·89	322·33	1,665·69
December	121·19	153·52	254·63	421·26	18·79	80·16	148·95	222·57	350·68	1,771·75
1978 March	109·32	159·33	118·17	602·79	22·88	158·52	101·95	241·97	369·52	1,884·45
June	115·12	243·39	373·60	453·85	13·41	32·30	205·77	202·93	521·45	2,061·82
September	116·82	301·61	328·02	479·18	14·02	42·31	386·35	190·83	426·43	2,285·57
December	118·95	313·17	148·86	721·23	10·94	88·80	373·22	210·71	419·76	2,405·64
1979 March										

*Hire purchase includes liens or hire-purchase contracts on machinery, equipment or durable consumer goods

Source: Specified Financial Institutions' Quarterly Returns

N.B. Figures do not necessarily add up due to rounding.

TABLE IV

PLANNED ALLOCATION OF DEVELOPMENT FUNDS BY PUBLIC AND PRIVATE SECTORS IN HOUSING IN (K£'000)

			1978/1979	1979/1980	1980/1981	1981/1982	1982/1983	1983/1984	1978-1984
MINISTRY OF HOUSING AND SOCIAL SERVICES	NATIONAL HOUSING CORPORATION	RURAL HOUSING	500	1000	1000	13000	1750	2000	7550
		URBAN HOUSING	2925	2712	2016	2662	3836	4366	18519
	CENTRAL GOVERNMENT STAFF HOUSING	NAIROBI AIRPORT PROJECT	-	50	75	500	1000	1000	2625
		PROVINCIAL POOL HOUSING	300	350	400	550	700	900	3200
		STAFF MORTGAGE HOUSING	1	400	600	750	900	1200	3650
		KILESHWA REDEVELOPMENT	720	962	1000	1000	1000	1000	5682
	Loan's to Saving & Loan (K) Limited for Medium Cost Housing		117	-	-	-	-	-	1175
	Loans to HFCK for Medium and High Cost Housing		-	-00	125	600	800	1000	425
	GRANTS TO HRDU		170	230	250	280	310	340	1580
	FORWARD PLANNING AND STUDIES		3[illegible]0	600	543	600	700	800	3543
	SECOND URBAN PROJECT	NAIROBI	10[illegible]1	1771	2900	2900	1009	-	9601
		MOMBASA	536	1154	880	377	118	-	3065
		KISUMU	558	1640	1435	478	94	-	4205
	TOTAL HOUSING (N.H.S.S.)		8052	10762	10799	11745	11938	12300	65600
OTHER PUBLIC SECTOR	Institutional Housing		2200	2380	2470	2670	2800	3000	15520
	Total Central Government		10252	13142	13269	14415	14738	15300	81120
	LOCAL AUTHORITY FROM INCOME OTHER THAN LOCAL SOURCES AND FOREIGN AID		1242	1360	1482	1630	1793	1972	9479
	TOTAL PUBLIC SECTOR		11494	14502	14751	16045	16531	17272	90599
PRIVATE SECTOR			10200	10950	11700	12500	13250	14000	72650
GRAND TOTAL			21694	25452	26451	28345	29781	31272	163249

1977

TERMS OF LENDING OF PRIVATE HOUSING FINANCE INSTITUTIONS

TABLE V

	Deposit Interest Rates				Mortgage Loan Interest Rates			Advance in % of Price		Max Loan (Shs 000)	Maturity			Charges in % of Loan	Min. Lease Years
	Demand	1 mo.	1 yr	2 yrs	New	Old	Invest	New	Existing		New	Existing	Invest		
EABS	6%	8%	8.5%	Negotiable	10	10	12	70	60	500	15	10	15	ca 1%	40
					8.5 Kenyans										
HFCK	5%	7%	8%	"	10.5	10.5	12	90	90	400	20	20	15	ca 1%	30
S.&L.	6%	-	8%	8.5%	11	11	12			500	15	15	15	1%	25
CO-OP BANK	5%	51/8%	57/8%	57/8%	9%	9%	10%	80	75	?	5	5	5		

1977

VITAL STATISTICS OF PRIVATE HOUSING FINANCE INSTITUTIONS

TABLE VI

(KShs)

	Mortgage Securities	Investments	Other Assets	a. Shares b. Deposits	Reserves	Other Liabilities	Profits	Running Costs	Tax	Branches
EABS	153.713.374	7.481.057	97.737.852	a. 134.134.955 b. 105.057.010	12.267.924	2.472.395	11.150.654	5.826.361	2.244.918	Mombasa
HFCK	317.421.245	17.143.845	77.979.127	a. 6.000.000 b. 213.582.885	10.009.261	176.523.843	4.754.890	9.168.197	2.614.824	Mombasa Nakuru
S&L	165.348.260	19.068.660	42.971.920	a. 2.000.000 b. 216.655.680	3.754.160	4.979.000	4.646.880		2.127.780	
	Loans									
CO-OP BANK	232.578.020	276.313.320	60.174.260	a. 23.669.000 b. 459.332.960	2.422.220	83.641.420	6.733.640	11.124.200	2.757.910	

RURAL SHELTER SECTOR

1 Introduction and Summary

1.1 Outline of Chapter

This chapter assesses the shelter situation in the rural areas of Kenya: it analyses the present circumstances and problems; discusses the programs and institutions developed to meet these problems; and, in the context of the policies to be instituted under the Fourth Development Plan, suggests some further ways in which the situation may be ameliorated.

The subject is a very broad one, particularly insofar as the problems and potential solutions vary so widely between regions of the country. The team traveled extensively, undertaking field investigations in the Thika and Limuru areas, in the Machakos, Kitui, Kisumu and Siaya Districts, and in the coastal area. Nevertheless, given the time available, the findings of these visits could be little more than impressionistic. Furthermore, the team found few documents to draw upon, except for a handful of studies largely focusing on purely traditional forms of house construction. In acknowledging present realities - with rural housing increasingly composed of transitional and semi-modernised structures - these studies are of limited relevance to the present investigation.

It is therefore one of the main recommendations that more detailed studies be undertaken within distinct geographical areas, in order that more detailed programs of action may be initiated.

This chapter is divided into five sections. The following pages of this section summarise the main findings and recommendations of the team relating to shelter in the smaller towns and in the rural areas of Kenya. Section two presents a picture of the present rural setting: settlement patterns, an economic and demographic profile of rural households, and a description of rural shelter. The following section describes relevant official policies, and the main private and public institutions that are assisting with rural shelter development. Section four discusses the role of rural shelter in the national development strategy. The final section summarises the policy and program prescription of the recently published Five Year Development Plan; and, through an analysis of needs and constraints of rural shelter development, points out gaps and some ways in which these could be filled.

It should be noted that although this chapter focuses on shelter it also investigates the community facilities and infrastructure which in a rural context are as important, if not more so, than shelter itself.

1.2 Summary of Conclusions

Agriculture decisively dominates the Kenyan economy, supporting approximately 85 per cent of the population and contributing nearly 40 per cent of GDP. Yet a large proportion of the country is either arid or semi-arid with the result that three quarters of the population occupies only one eighth of the land area. Specific regions exhibit particular population pressures on the land, resulting in migration both to the towns and -

more importantly - to other rural areas. These movements create both benefits and disbenefits to the receiving areas and to the areas of out-migration: the latter tend to lose their younger, more well educated adult men, but gain by way of cash remittances from their urban migrants.

Despite the great improvements in the country's agricultural production over the last decade, it is now clear that the number of rural poor has been increasing, partly as a result of individualisation of rights over land and the consequent land market. Two opposing trends have emerged. There is a growing concentration of land resources in fewer hands; while among the poor it has been impossible to avoid further fragmentation of already sub-economic plots partly because of traditional rules of succession and partly because of the inability of the urban job market to absorb sufficient surplus rural labor.

Apart from its negative distributional effects, Kenya's development strategy has to date placed little official emphasis on rural shelter. Attitudes regarding the role of housing in community development and welfare have remained imprecise: apart from some very small financial input from the government, and poorly-coordinated efforts by a few agencies and individuals, shelter development has been left increasingly to market forces. The current Development Plan does exhibit greater concern about these and other policy shortfalls, and should go further than in the recent past to alleviate many of the hardships experienced in rural areas. Nevertheless, many gaps will remain.

Traditional shelter has evolved and developed for many generations. As such, it forms a reflection of the cultural heritage of the people, the physical environment, lifestyles and the available construction materials. Now, however, rural shelter in Kenya is in a transitional stage. Traditional forms can no longer be found in many places by reason of changed lifestyles, the influence of other cultures, the depletion of certain traditional building materials and the increased availability of modern materials. The most evident change is the gradual disappearance of the round house in favor of rectangular types. Similarly, construction techniques have become more sophisticated, and there is a consequent growing need for specialized labor.

In many rural areas, traditional building materials are becoming increasingly scarce. The growing population is tending to over-exploit a limited resource at the same time as reducing that resource by extending cultivation into marginal lands, the traditional sources of building materials. This scarcity is obliging rural dwellers to look for alternative materials and, in turn, causing increases in construction costs.

There is thus a growing market for modern materials in rural Kenya. Nevertheless, the retail prices of many of these materials are controlled from Nairobi, in a way which encourages under-the-counter sales at inflated prices.

The land tenure system determines how, to whom and when land can be released for development. The existing institutional

information between Nairobi and rural householders. It is recommended that their staff be increased and relevant training programs initiated.

3. Decontrol Prices of Building Materials

The present system of gazetting prices for building materials is clearly counter-productive. It is recommended that price controls be removed, subject to careful monitoring to determine that the change is effective in increasing supplies.

4. Accelerate the Local Afforestation Program

One of the key building materials - timber poles - is becoming particularly scarce and expensive in many parts of the country. The program of afforestation in small areas to meet local needs of poles (and possibly of charcoal) should be expanded towards meeting the demand.

5. Support Research into Appropriate Shelter Designs and Technology

Several lines of research are currently in progress or proposed, but they are uncoordinated and appear unlikely to lead to any concrete program. It is therefore recommended that such research be encouraged, and that the Housing Research and Development Unit prepare a program whereby experimental and demonstration units may be erected in key locations throughout the country.

6. Expand the Village Polytechnic Training Programs

Since village polytechnics offer a ready base for the training of artisans skilled in construction, it is recommended that their expansion be supported, especially insofar as it leads to the increased availability of such skills in rural areas.

7. Support the Establishment of a National Housing Cooperative Agency

The principles of agricultural cooperatives have been demonstrably appropriate for Kenya; self-help groups have been active in shelter construction; and a study has shown that there is potential for the development of shelter cooperatives both with respect to construction and credit facilities. The recommendations of the study relating to the establishment of a National Housing Cooperative Agency are therefore supported.

8. Introduce a Loan Scheme for Roof, Floor and/or Wall Construction

In order that households with no security for loans from the National Housing Corporation may make small improvements to their houses, the team believes that corporate security may be provided by a group of householders, on lines similar to those used for roof loans to villagers in Ghana. It is therefore recommended that a study be initiated to determine the feasibility of a scheme of this nature.

framework effectively provides mortgage facilities only to those with land titles. Even to landowners, however, methods of obtaining credit on land security remain a puzzle: generally ignorance of legal rights and limitations prevail. Consequently, land development potential (including that of shelter development) is not adequately tapped.

The Government continues to give greater attention to urban than to rural shelter; throughout the history of Kenya, the impetus of rural shelter development has been left to the people. Some assistance is provided by way of technical advice, type plans and loans for construction; but efforts are minimal. A few other agencies concerned with technical training, water supply and health improvements are also showing some interest; but the impact of this interest has not yet been felt.

The difficulties of providing greater assistance should not be underrated. Yet there are sound developmental reasons why further inputs to raise the level of rural housing construction would be beneficial. These include: the improvement of health, increases in productivity, expansion of employment opportunities, maintenance of cultural stability, the promotion of locational policies, and the reduction of income inequalities.

The identification of rural shelter needs and constraints can only be comprehensively undertaken on a local level because each region of the country features a unique mix of problems. However, in the broad context of shelter, certain problems are common. These include low or non-existent cash incomes, insecurity of tenure and landlessness, restricted loan facilities, shortages of traditional building materials, shortages or non-availability of modern materials, tools and skills, increasing costs and socio-cultural constraints. A further development constraint is the unclear national committment to improving rural shelter conditions.

1.3 Summary of Recommendations

Relating this analysis with potentials for further action, the team has made the following recommendations for limited governmental initiatives which would help to resolve the problems both of quality and of quantity of rural shelter.

1. Strengthen the National Housing Corporation's Rural Housing Loan Scheme

The importance of the scheme has been recognized by Government by a recent substantial increase in the budgetary allocation for the fund. Nevertheless, little is known about the mechanics of the fund, and it is recommended that these be carefully studied, if necessary to support applications for a yet greater increase in its allocations. Management of the scheme is weak; and the impracticality of lending to individuals as opposed to groups, in particular, should be examined by the team proposed to investigate the operations of the Housing Corporation.

2. Strengthen the Role of the Provincial Housing Officers

These field officers of the Ministry of Housing and Social Services could play a much more significant role in disseminating

9. Enforce and Expand the Provisions of the Employment Act

A number of large-scale employers in rural areas are particularly lax in promoting the welfare of their employees as regards their shelter. It is recommended both that the provisions of the Employment Act (requiring, in certain circumstances, that employers provide either housing or an allowance to their employees) be enforced; and that, subsequently, the Act be strengthened by defining the circumstances in which it will be obligatory to provide minimum-standard housing. If these employers can be induced to provide such housing for individual or group ownership by the occupants such attempts should be made, possibly in the form of attractive finance or taxation terms.

10. Improvement of Community Facilities and Other Types of Infrastructure

It is recognized that access to such shelter related services as potable water, dispensaries, training facilities and communication links is of great importance to the viability of rural settlements. An increased awareness of this fact by government should lead to a more decisive and more closely coordinated effort in promoting these components of rural shelter wherever housing schemes in rural areas are contemplated.

Of these recommendations, it is envisaged that support could be solicited by the Government of Kenya from AID or other aid organisations for the following:

- If systematic study shows the need and administrative capability, additional funds could be directed to the Rural Housing Loan Fund;
- Training programs for staff of the offices of Provincial Housing Officers;
- Financial and technical assistance towards local-resource afforestation programs;
- Financial or technical assistance for studies on appropriate designs and technology for rural shelter;
- Training programs for village polytechnic instructors;
- Technical assistance in the establishment of a National Housing Cooperative Agency;
- Assistance towards a study to determine the feasibility of a roof, wall and floor loan scheme.

2 The Present Rural Setting

2.1 Demographic Trends

2.1.1 Population Movements

As indicated in the preceding chapter, the majority of Kenya's population lives in the rural areas: 86 per cent according to

the official definition of "urban" settlements, or 88 per cent if the smaller settlements are classified "rural". The economy is dominated by agriculture, with probably more than 85 per cent of the population depending on it for a livelihood, while some 35 to 40 per cent of GDP originates from it.

. POPULATION GROWTH AND DISTRIBUTION, 1969-1978

	1969		1978		% Change p.a.
	no. ('000)	%	no. ('000)	%	
urban	1,112	10.2	2,148	14.5	7.6
(10,000)	(957	8.7	1,758	11.8	7.0)
(10,000)	(156	1.4	390	2.6	11.7)
rural	9,831	89.8	12,708	85.5	2.9
Kenya	10,943	100.0	14,856	100.0	3.5

The process of urbanization has reduced the growth rate of the rural population from 3.5 to some 2.9 per cent per annum. More significant, however, than the overall rate of growth is the extent of regional variation in the size and rates of growth - and, by extension, also of ethnic variations. Recent estimates suggest that it is the major ethnic groups which have the higher rates of population increase, with the highest in areas where land shortage is already perceived as a problem: particularly in the Western, Central and Nyanza Provinces.

. ESTIMATED POPULATION GROWTH RATES BY PROVINCE

	% p.a.
Central	3.2
Coast	2.7
Eastern	3.0
Nyanza	3.6
Rift Valley	3.1
Western	3.7

Source: Kenya Statistical Digest Vol. IX, No. 2, June, 1971

An important factor affecting the planning of human settlements is the density and distribution of population, which varies greatly from region to region. The overall density has risen from 19 people per square kilometer in 1969 to an estimated 24 today. In these terms, Kenya appears to be relatively empty, but the picture changes drastically on closer examination. Thus, more than 70 per cent of Kenya's land area is either arid or marginal land which cannot fruitfully be exploited given the existing levels of agricultural technology and methods of animal husbandry. More than 75 per cent of the country's population occupies only 12.5 per cent of the land area.

(Note to top table above)
Source: Human Settlements in Kenya: "urban" population taken as those within urban boundaries following 1971 extensions;"low" estimates for Nairobi and Mombasa, "high" estimates for all other urban areas.

It is largely because of land pressures that substantial movements of people have been experienced in Kenya. In 1969, nearly 13 per cent of the total adult population was enumerated in districts other than those in which they were born. The dominant areas of out-migration are in the Central, Western, Nyanza and Eastern Provinces. While there is also some considerable movement within these provinces from high to low density areas, migratory movements seem to terminate in the Rift Valley and, to a lesser extent, the Coast Province.

The relationship between variations in land availability and the inflow or outflow of population between districts is not a simple one. Rights of individual access and use of land, relative profitability of agriculture, as indeed alternative opportunities for employment and other social and cultural factors (including feelings of tribal exclusiveness) are all likely to influence the rate of migration to agricultural locations.

Thus, in addition to the well-documented movements sparked off by the colonial alienation of land, an important category of rural migration has comprised movement to land frontier areas - unoccupied lands or land formerly designated Crown Land. Sometimes known as "spontaneous rural migration", this category accounts for perhaps the largest number of population movements in Kenya in modern times.

As important as the movements themselves is the selectivity of migration. Early studies in various parts of Africa indicated a high propensity of young adults to migrate to urban destinations. In Kenya one study reports a peak of 15 - 25 years, and another adduces evidence indicating that persons older than 45 years in the urban migration stream are fewer than those actually returning from urban centers.

Migration also is selective with respect to sex and education: there is a very strong association between the degree of education received and the incidence of urban migration; and men are more likely to migrate to the towns than are women. This is perhaps explained in part by the relative levels of education of male and female children.

In summary then, the profile of rural-urban migrants presents relatively young, educated men in the prime of their working life moving from predominantly agricultural areas. A smaller stream comprising similarly young men, but perhaps with lower levels of education, moving from poor agricultural areas to areas of commercial agriculture to hire themselves out as agricultural laborers. A reverse stream, representing "retirement migration", has also been identified as involving older men moving back to the rural areas.

Recent investigations indicate different characteristics of rural-rural migration. This, being distinguished by the migrant's desire to settle permanently in their places of destination, typically takes place at a stage in the family cycle when the number of male children above the age of 15 may be viewed as presenting a real or potential constraint on personal land

resources. Consequently, the average age of rural migrants is higher than that of their urban counterparts.

But if rural migrants have remained more elderly than urban migrants, their level of education and consequently income levels have recently been changing. As the land frontier has virtually closed up and land prices have increased, so the prospect of rural relocation has been pushed virtually beyond the means of all but the relatively wealthy. Interpreted against political and economic policies in Kenya, the emergent trends in rural migration suggest a widening of the gap in rural incomes. It is, however, believed that the social significance of the polarization thus emerging from the patterns of land and income distribution may not be fully felt for some time to come. The practical implications of these observations provoke some searching questions about Kenya's settlement policy and its effectiveness in providing subsistence and employment to the landless and unemployed: these are raised in section 3.1.2 of this chapter.

It is a moot point whether the impact of urban migration upon rural areas is itself generally positive or negative. For while in some areas the absence of large numbers of men has had a deleterious effect on agricultural productivity, and the outflow from rural areas of the relatively well educated may have drained those areas of "leadership" and entrepreneurial talent, yet in other situations the migrants have contributed to the economic well-being of their families and kinsmen by making regular cash remittances. Ultimately, however, the explanation for this variation may lie in the opportunities for cash investment in agriculture in the migrants' places of origin.

The general picture in much of the country is that the selectivity of urban migration leaves in the rural area old men, women and dependant children. It is the women who are left to operate the rural households and small holdings. The 1969 Census showed, for instance, that about 525,000 rural households were headed by women: presumably most of the males being employed in towns. Other evidence indicates that the number of people living in split rural-urban households is very large. The Kenyan family in many cases has been characterized as comprising "one family (but) two households".

Intensive studies in Nairobi have documented the level of remittances by rural migrants to their places of origin. Thus it has been estimated that slightly more than 20 per cent of the urban wage bill is remitted to rural areas: the lower the income of the urban dweller, the higher is the proportion of income remitted.

These fluctuations in remittances take on greater significance when it is realised that the great majority of urban workers in Kenya do not have any significant old age retirement benefits, nor has the country yet evolved a comprehensive social security system. In the light of these realities, urban residents are impelled to maintain strong economic and social ties with their kinsmen in the only places where they may have an automatic claim to social security based on their claim to the land. Not surprisingly, the majority of urban workers do not see themselves

as permanent urbanites; they expect eventually to return to their rural places of origin. The reality of the family being split into two households is bound to remain for a long time.

2.1.2 Rural Household Profile *

As a result of high fertility rates, the rural population is young: 50 per cent are aged below 15 years, and 5 per cent are aged 60 or above. This results in a high dependancy ratio (127), which some analysts believe will increase further. Overall, the male to female ratio is 96:100, presumably a result of the predominantly male migrations to urban areas. Only in Nyanza Province does the male to female ratio exceed 100.

The average rural household size is of 6.97 people, with the median size in the range from 6 to 7 people. In the Coast Province, the average is higher, at around 8 people per household. Some 22 per cent of households are headed by women - again, a result of selective migration; the majority of these female household heads were aged 30 years and over.

Almost three quarters of household heads remaining in the rural areas have never attended school; although- as would be expected - the proportion of the population never having been to school falls with decreasing age. There still remain about one third of rural children of school age who are neither attending nor have ever attended school.

The compilation of an economic profile is complicated by the fact that members of rural households will have jobs in more than one sector: the head perhaps being a small-scale farmer, with other members of his household working in non-farm occupations. The table below should therefore be interpreted with caution: indicating that the great majority of rural households are living on small farms (most as smallholders, a few as casual workers), but with a substantial minority as pastoralists or employees (on large farms, in government service, in non-farm activities such as agricultural processing industries or commerce.)

TABLE . RURAL EMPLOYMENT, 1976

	no. ('000)	%
Modern Sector	915	13.8
Small scale agricult.	2,665	72.3
Pastoralists	390	10.6
Rural non-farm	125	3.4
All rural	3,688	100.0

Source: Development Plan 1979 - 1983, and estimates based on Economic Survey, 1978

* Statistics in this and the following sections are largely derived from a report of the Second Round (1976/77) of the Integrated Rural Survey, in Social Perspectives vol. 3, no.2 (CBA, December, 1978); the survey excluded the urban population and those living on small and medium farms, as well as pastoral peoples.

Of those in the "small farm" group, about 12 per cent of the labor force were reported as having no occupation. 46 per cent had holdings of less than 1 hectare, while 14 per cent had no land holdings at all.

The mean annual income of smallholders is Shs 3,900 (1976/77), with median income in the range of Shs 2,000 to 3,000. 52 per cent had incomes below Shs 3,000 annually, the Government's official "poverty line".

2.2 Settlement and Shelter Characteristics

2.2.1 Settlement Patterns

There are three distinct islands of concentration of population in the country, in areas with fertile soils and an adequate rainfall: in the lake basin west of the Rift Valley, stretching north from the Tanzanian border to Mount Elgon; the central highlands, north of Nairobi, encompassing the slopes of the Aberdare (Nyandarua) Range, Mount Kenya and the Meru Hills; and the coastal belt along the Indian Ocean between the Tanzanian border and the Galana river. Within these regions the 1969 density of population ranged between 150 and 600 persons per square kilometer (comparing with an average for the whole of Kenya of 19).

Throughout these well-watered areas of sedentary agriculture, families tend to live in nuclear units; in contemporary times, with a preponderance of perennial crops, coupled with an increasing land shortage, there is relatively little movement of homes. The broad picture emerging since Independence is, indeed, of an even more scattered settlement pattern in many areas, induced by the introduction of individual ownership of land.

In the relatively drier parts of the country, where land use is relatively extensive, families live in larger composite units, sometimes comprising three generations. Movement of homes here is more frequent, especially among the pastoral populations.

In the Kenyan context, the notion of "village" is riddled with ambiguity of definition. In many places, the village is conceived in socio-cultural rather than physical terms. Thus people may talk of a village even where no agglomeration of dwellings is apparent so long as several scattered homesteads within a geographically contiguous area are occupied by people who constitute a lineage, clan or other kinship group. Given the relative simplicity of shelter, the abundance of traditional building materials in the past, and consequently the ease of movement of homesteads, human habitation was conditioned by socio-cultural dictates; people did not adapt themselves to fixed homes.

Given this scattering of population, it should be expected that access to services such as schools, markets and health centres is often poor. Access does vary widely from district to district, but the following figures for the rural population as a whole are nevertheless indicative. Four-fifths of the population are more than 2 kilometers distant from a secondary

school; a third have to travel over 2 km from home to a shop; and more than a half are 2 km distant from a bus route. The average distance from home to the principal source of water is 1.65 km, ranging from 0.92 in Central Province to 2.72 km in Coast Province (which takes in vast areas of arid country in the hinterland of the coastal strip).

2.2.2 Rural Homesteads

Housing styles and construction skills have been developed and passed from one generation to the next, forming a perfect reflection of the people's life-styles and cultures. For the majority of the people in Kenya's rural areas, a homestead would typically consist of several huts, a separate kitchen, grain store, cattle sheds, pit latrine and a dumping pit, all within a fenced compound. Different activities would be carried out in different structures; and communal activities, such as feasting and dancing, in the open courtyard.

Insofar as it is possible to generalise, the typical dwelling will have earth floors and mud walls, although a higher proportion in the Central and Eastern Provinces have concrete floors (12 and 11 per cent respectively) and walls of permanent materials (12 and 19 per cent). Over two-thirds of all dwellings have roofs thatched from various materials, but with the Central and Eastern Provinces again showing a marked proportion with roofs of corrugated iron sheets (57 and 35 per cent respectively). A tiny proportion of rural dwellings are connected to a main sewer; three-fifths used pit latrines, and the rest had no sanitation whatever. 15 per cent drew their water from a piped source; 23 per cent from a spring, and 40 per cent normally from a stream. Less than 1 per cent of all rural households had access to electricity.

Cultural differences relating to shelter can be marked between regions. Thus local customs among the Kamba people require that males over 15 years old construct their own shelter; while among the Luo people and in Central Province, newly-married couples can in no way share the same roof with their parents, even if there is ample space in their homes. The Giriama elders of Coast Province have a great attachment to their traditional huts, preferring them to the Swahili type of house found elsewhere in the same region.

Other traditions remain strong. Some communities in the coastal belt, for instance, fear to build prestigious shelter or to improve it to the extent that it becomes prominent, that they may be accused of witchcraft. For similar reasons, loan-financed development may be held unacceptable.

In some communities, people prefer to build houses individually; in others (such as around Machakos, in Central Province and in Taita-Taveta) self-help groups work at roofing, construction and repairs. The team found, however, an overall reduction in self-help efforts throughout the country.

Traditional building styles do have their disadvantages. One of these is that very frequent maintenance is required: grass

and reed roofs tend to leak from two to five years after installation; makuti roofs, after four or five years; papyrus roofs, after ten to fifteen years. Nevertheless, the team did identify well-maintained mud houses of forty years and older; and ascertained that Swahili-type houses can last up to fifty years.

There are also perceived problems of health (insects harbored in the earth floors, mud walls and thatched roofs), of ventilation, of lighting (particularly for reading) and of fire hazards. These are problems which call for new design but not necessarily utilising new materials or radically different construction techniques. Indeed, the use of some non-traditional materials, such as GCI roofs, can be positively harmful by exaggerating temperature differences internally and, in the highlands, creating problems of condensation.

Cultural interaction is helping to bring about changes. It is found that whereas old people may prefer to live in traditional grass-thatched round huts, in many cases their children will opt for "modern" tin-roofed rectangular structures.

Changes in land use, largely brought about by increasing population pressures on the land, too, are requiring radical changes in shelter. For one thing, shortages of cultivable land call for a more compact form of development than hitherto. This does not, however, necessarily demand that cultural traditions on use of space be abandoned, but more that homesteads be grouped rather than scattered.

More importantly in the short term, demands on traditional building materials coupled with a decrease in their supply (resulting from the more extensive use of land) is bringing about widespread local shortages of these materials. Thus in the sugar belt areas of Nyanza Province there is a lack of timber poles, grass reeds and papyrus for building. In some parts of Coast Province, palm leaves and mangrove poles are running out. The team found similar shortages also in the Machakos and Kitui Districts.

This depletion of materials is causing people to turn to alternatives which are generally more expensive and, in many cases, may result in an inferior structure. The team found that imported cement blocks have become competitive with fired bricks in the Mutumo area of Kitui District; and that quarried stones from Kedowa have replaced the original sun-dried and fire-burnt bricks of the Luanda-Maseno area. Additionally, use of these new materials often requires specialised skills for construction: skills which may not be available in many parts of the country.

The prices of many of the manufactured materials are government-controlled: gazette notices legislate on the price of cement, GCI sheets, roofing nails and others. One notable exception is timber. However, profit margins for both manufacturers and dealers are said to be inadequate, and it is argued that prices need to be modified to take account of increases in the cost of inputs and of transportation. Unrealistically-set prices have caused widespread shortages of certain key materials. An extreme

example is of roofing nails: the gazetted price was such that one of the major producers closed his plant, selling off the machinery to Zambia. Other problems relating to the availability of building materials are of distribution: a recent example is of cement, which problems have now largely been overcome.

That there are shortages, however, does not invariably mean that the materials are not available. For in many places there is a thriving black market, in turn forcing prices above realistic levels.

Costs of transport are an important factor in overall costs of construction in rural areas: (quite apart from costs the distribution of building materials such as cement has often left much to be desired). For NHC standard houses, it was calculated in 1972 that premia over the construction cost in Nairobi ranged up to 10 per cent for the other main urban areas, and up to 100 per cent for the smaller and more remote towns. Ironically, then, NHC-type housing in the more distant parts of the country is much more expensive than similar housing in urban areas, whereas even high quality indigenous housing there is much cheaper.

In general, then, in the sparsely-populated areas, traditional building materials may still be readily available; but imported materials are either not available or at high cost. In the more densely-populated areas, traditional materials are hard to come by, but modern materials are more easily accessible and at relatively lower prices. The one main exception to this rule is the coastal area, which has potentially rich supplies of coconut (for makuti roofing, and coir for walling); and with fairly ready access to Mombasa with its major building materials industries.

All of these forces, economic, structural and cultural, are bringing about changes in the physical form of rural housing, from traditional to modern. Traditional shelter is largely self-built, cheap and constructed out of local materials; it is, by and large, built of flexible materials from ground level to roof without utilising rigid materials. In the transitional stage, the round is replaced by rectangular shapes, with support pillars up to wall-plate level. The roofing material is still of local materials, such as grass, reed, leaves, papyrus. The space within the structure continues to reflect culture and social organisation of the people. The final stage of rural shelter development is the "modern" house, using imported materials and requiring skilled artisans for its construction. These houses are to be found more in settlements where building standards are enforced, and where construction is undertaken by public or private agencies on behalf of the occupants.

There are, however, many people who, having low cash incomes, and being unable to build traditional structures, cannot afford to construct modern shelter. This condition may have a number of results. For some, it results in a break-down of traditions:

families live together in defiance of custom. Others may live in structures which no longer give adequate shelter from the elements. It may also result in increased migration to the towns, in the hope of obtaining sufficient income to remit to their home areas for the construction of their own, "modern" homes.

2.2.3 Settlement Villages and Agro-Industries

As a result of increased population pressure, economic modernization, changes in tenurial rights over land or the necessity for greater administrative control, the indigenous people have been forced also to change their settlement patterns. Village settlements in rural Kenya today include some predicated upon religious affinities (such as Karai village with Islamic foundations), or those originating from the needs for strategic control of populations (many villages in Central Province formerly started as a counter-insurgency measure during the Mau Mau revolt). Today many such villages, as indeed some of the service centers, provide shelter to many of the landless who have since been displaced as a result of population pressure and land reform.

But the most significant impulse in recent times for the establishment of village settlements has come from government development schemes. An example of this is provided by the irrigation schemes in which dwellings are grouped together, partly to allow for the maximum rational use of irrigated land for agricultural production. It must be pointed out that in all the irrigation schemes in Kenya, with perhaps the exception of recent expansions in Mwea/Tabere, the quality of shelter, provision of basic services and amenities and the level of social integration in general paint a very disappointing picture.

In nearly all the schemes the tenants, many of whom had been original residents on the land acquired for irrigation, occupy the land as temporary tenants and may be evicted if they fail to satisfy conditions laid down by the management. The house provided, although varying in design, is generally of mud walls and corrugated iron roofing, one single unpartitioned room with no provision for storage or kitchen. There is no provision for domestic water, and often tenants resort to irrigation channels whose water may be chemically polluted.

Domestic fuel has to be brought in over long distances and at very high prices, the same it true for some food requirements

As has been observed with respect to Asia, most settlement programs are designed to achieve something else: to increase agricultural production, open up new lands, alleviate rural poverty, provide land to the landless, and so on. With the experience of irrigation settlement programs in Kenya one cannot avoid to conclude that one of their objectives is to increase government revenue through increased agricultural production. With respect to the quality of shelter and general social welfare, the example set by the government here should not be encouraged elsewhere.

Given the performance of the government itself in providing shelter and other amenities in their own irrigation settlement schemes, it is not surprising that it has been very difficult to persuade employers in other agricultural industries to improve the quality of shelter for their employees. Being among the earliest economic enterprises dating back to colonial history, plantation agriculture plays an important role in the national economy. The large farm sector employs about 260,000 workers, of whom it is estimated, less than half are housed by the employer.

Historically, the employees in agricultural plantations have been the most deprived in terms of shelter and social services. In the past the majority of workers in this sector were provided at best with a single room of the most rudimentary basic shelter and sometimes even the single room was shared among two or more workers. The logic appears to have been to provide the worker not with dwelling space but rather only a bed space. This may have appeared justified at an earlier time when labor migrants were target-satisfiers, working only for a short time before returning to their places of origin. But this is not the case now, and plantation labor, except for fulfilling the most seasonal tasks, has become relatively more permanent. Housing conditions, however, continue to be very poor, and although the government has often urged such employers to improve housing conditions for their workers, no clear mechanisms appear to have emerged for the enforcement of such directives.

Characteristically, the older agro-industries still provide the poorest housing and other social amenities for their workers, while their impact on surrounding rural communities has generally been more diffused. This is partly due to the fact that land alienation, displacement of populations and any change in the indigenous economy was bound to have less dramatic affects at the turn of the century than they would today. It was then relatively easy to relocate and start a new life elsewhere since there was at least some land frontier. The varied impact of agro-industries on rural settlement and housing quality in Kenya today is summarised in brief case studies in Annex II.

2.2.4 Intermediate Level Centers

Some 2.6 per cent of the population is living in the smaller towns in Kenya, those with a 1969 population between 2,000 and 10,000. Generally, these towns are in a transitory stage from rural to urban, and their characteristic functions and level of service differ from both pure rural and urban. The line of demarcation, however, from the first to the second stage, and from the second to the third is not easily discernible.

In visiting a number of these small towns, the team found inadequate shelter for all categories of the population. A common practice is to rent one-roomed units at the back of shops at relatively very high prices. In Siaya, for instance, single rooms, 3 x 4m, rented for Shs 275 per month exclusive of light. Water is from a common tap outside, as is a common shower and toilet. Those many households who cannot afford

such rents are obliged to live in substandard housing and insanitary environment in nearby squatter settlements.

The Government has identified 27 of these towns (in addition to the 11 larger towns) which are eligible for urban low cost housing development funds.* (The selection criteria for these centers was that demand would justify project sizes exceeding K£37,500 in 1974, or of 76 units or more. Such centers usually have over 4,000 inhabitants and with growth rates exceeding 7 per cent per annum).

A certain amount of public low-cost housing is being constructed in these towns, albeit well below the calculated need. These programs are typified by the AID/NHC project described elsewhere in this report.

3 Present Programs and Policies

3.1 Policies

3.1.1 Rural Development Policies

Although the concept of rural development has been evolving over time, its ambiguity appears to have persisted. Thus during the 1960's and early 1970's the focus was on extending the reach of administrative and other institutions of the central government, together with some attempt to induce rural communities to adopt rational economic calculations instead of relying on the dictates of tradition. Many of these objectives of "community development" failed to realise any tangible gains, in part due to the fact that the governmental efforts lacked coherent integration and were being implemented piecemeal to satisfy narrowly specific goals.

The realisation of the 1960's that agricultural growth was stagnating gave rise to the idea that modern technology would solve most of the acute problems of the rural areas. The programs introduced certainly did induce an impressive expansion in agricultural output, mainly from the smallholder areas. But, by being generally limited to the agriculturally high potential areas, the strategy failed to help the great majority of the rural population. Although land distribution programs were popularised under such titles as the "Million Acre Settlement Scheme", they have nevertheless been more supportive of the better-placed, more enterprising and often wealthier individuals, especially those in the more fertile areas engaged in commercial farming. It has even been suggested that landlessness and the extent of rural poverty has become more acute. Official policy was, however -

> "To make the economy as a whole grow as fast as possible, development money should be invested where it will yield the largest increase in net output. This approach will clearly favor the development of areas having abundant natural resources, good land, and rainfall, transport and power facilities, and people receptive to and active in development." (Sessional Paper No. 10 of 1965)

---

* Nairobi, Thika, Kiambu, Murang'a, Nyahururu, Ol Kalou, Nyeri, Karatina, Malindi, Kilifi, Mombasa, Voi, Wundanyi, Embu, Isiolo, Kitui, Machakos, Athi River, Meru, Kisii, Kisumu, Homa Bay, Kericho, Londiani, Nanyuki, Nakuru, Molo, Naivasha, Njoro, Elburgon, Kapsabet, Narok, Kitale, Eldoret, Bungoma, Webuye, Kakamega, Mumias = 38.

The widening income disparities combined with rural-urban inequalities served to increase the rate of rural-urban migration, even though the majority of the urban migrants could not immediately find acceptable employment. It was in this context that the first experiment in integrated rural development was launched in 1969.

This Special Rural Development Programme (SRDP) was aimed to increase rural production, incomes and employment through local and popular participation. It sought to coordinate the provision of services such as marketing, credit, agricultural extension, health services, roads, water supplies and housing. It entailed building a machinery for planning and implementing the project; thus, besides trying to integrate the efforts of various ministries, it was essential that the SRDP have an experimental component.

Because it appeared to undermine the institutional justification for already-existing government departments and agencies, the SRDP had difficulty in getting off the ground. Its eventual success or failure was ultimately determined by the nature of institutional bottlenecks, administrative skills of the program coordinators and financial constraints. Significantly, an evaluation of the program, while indicating some limited successes, was largely negative.

The SRDP has subsequently been phased out, to be replaced by the Integrated Agricultural Development Project; this is still in its early stages of implementation. To the extent that this is a project of a single ministry and focuses primarily on agricultural production, it can be said to be narrower in scope than the SRDP. This being the case, the question still remains about the urgency with which the government intends to pursue integrated rural development.

The focus of the Second Development Plan, reinforced by the third Plan, was rural development. ("The strategy of the Plan is to direct an increasing share of the total resources available to the nation towards rural areas." 1970-74 Plan, p.2; 1974-78 Plan, p. 109) Apart from increasing agricultural production and rural welfare, part of the objective of this strategy was to stem urban migration by creating employment in the rural areas. It would appear that the objectives have, however, not been manifested in the patterns of government expenditure. While expenditure targets of the Plan as a whole have generally been exceeded, those on agriculture and other rural services have generally lagged; they have, indeed, been almost static since independence.

Experience suggests that a strategy of rural development with the objective of stemming urban-rural migration without other basic structural and institutional transformations is unlikely to succeed. Kenya may, indeed, already be nearing the limit of the ability of the land to provide a means of livelihood for all her population under the existing institutional arrangements. The implication is that a basic reassessment and far-reaching transformation of the present land policy, including the patterns of rural development, is called for. The goal of such a new policy would be to find lasting solutions to the problem of rural poverty, landlessness and urban unemployment. The first steps in this direction are suggested in the current Development Plan (see discussion of these in 5.1)

. GOVERNMENT DEVELOPMENT EXPENDITURE ON AGRICULTURE AND SELECTED RURAL SERVICES, 1966/67 - 1972/73 (in £ million)

Category	'66/67	'67/68	'68/69	'69/70	'70/71	'71/72	'72/73[1]
Agriculture[2]	5.5	4.7	5.4	4.9	5.1	6.9	6.4
Land resettlements	2.5	1.8	2.4	1.5	1.8	2.7	1.3
Rural water supply[3]	0.1	0.2	0.4	0.4	0.5	0.8	1.0[5]
Rural roads[4]	0.7	1.3	1.5	1.8	4.9	3.8	5.0[5]
Total Capital expenditure	16.6	21.8	26.8	31.0	44.4	48.3	64.9
Share of agriculture in capital expenditure (%)	33.1	21.6	20.1	15.8	11.5	14.3	9.9
Share of rural water supply and rural roads in capital expenditure (%)	4.8	6.9	7.1	7.1	12.2	8.6	9.2

(1) Provisional
(2) These figures exclude government expenditure on land adjudication.
(3) This represents the development expenditure of Water Development Division on rural water supplies plus the water development expenditures of the Ministry of Health, Lands and Settlement, and Cooperatives and Social Services; taken from Economic Survey (annual).
(4) This is the development Expenditure of the government on settlement, feeder, tea, sugar, and similar roads. Taken from Appropriation Accounts (annual).
(5) Projection of the trend.

Source: Statistical Abstracts (annual).

3.1.2 Land Tenure Policies

In the last decade of colonial government, agricultural reformers had argued that customary African land tenure was detrimental to prosperity by encouraging excessive fragmentation and by discouraging commercial enterprise based on land. This system, therefore, it was argued, inhibited growth in the productivity of the land. As a result of the Swynnerton Plan (1954), land tenure reforms were introduced, with individual freehold titles and a free market in land. These reforms were modelled on experience during the Industrial Revolution in Europe, conditions which did not hold in contemporary Kenya. They resulted here in aggravated rural destitution, possibly in the polarization of rural classes, and in increased landlessness. (It has recently been estimated that there are 410,000 landless and squatter families throughout the country; the team

believes this to be an underestimate, particularly in view of the figure of at least 130,000 squatters in the coastal strip alone.)

The residual customary ties and kinship obligations have tended to mute and confuse the extent of socio-economic polarisation. Nor, in the absence of profitable options for land use in some areas of the country, has the emergent land market led to increased productivity and greater incomes. Two major opposing trends have emerged from the land tenure reforms and the concomitant land market. On the one hand, there is evidence of concentration of land resources in fewer hands. On the other, especially among the poorer sections of the rural population with already insufficient land and little income from non-agricultural activities, it has been impossible to avoid further fragmentation of the scattered sub-economic parcels in order to allow for customary inheritance obligations or to discharge certain financial obligations.

The idea that land should not be divided after registration beyond a certain minimum area assumed that there would be alternative income-earning opportunities for the surplus labor, and a restrictive rule of succession. The reforms did not, however, include provisions for incorporating and streamlining customary rules of succession. This has resulted in land fragmentation to such an extent that in some areas cultivation has been abandoned. (Official records do not reveal the extent of land fragmentation today since most of the partitions and subdivisions subsequent to registration are never recorded.)

One of the arguments pursued most zealously in support of land tenure reform was the capacity of individualisation to attract farm credit. In the early years following Independence, state credit agencies were eager to lend money on the security of land titles. Recently, however, both public and private credit agencies have become very reluctant to advance credit to small farmers. This is partly explained by the risky nature of small farm operation. The crucial factor, however, is their inability to effect foreclosure since, in many parts of Kenya there may not be buyers for a rural property in which there is a grave, even given the tribal exclusiveness of land.

The implications of these trends on the flow of financial credit to rural areas have been summarized by the observation that the original theory of title deeds being sufficient for the acquisition of loans has given way to a formula that excludes all but those who are in a position to offer substantial collaterals including urban property, salary attachments and the like. The title, as is evident in the operation of the NHC rural housing scheme loan scheme (section 3.2.2 below), is considered merely as a necessary condition for application, but hardly a sufficient one.

In addition, a situation appears to have emerged in which agricultural land is being used to secure loans for commercial and other non-farm enterprises. In effect, then, and partly as a result of population pressures and the socio-cultural

attitudes towards land, individualisation of land and the negotiability of title that came with it is likely in the long run to lead to credit shortages within agriculture and to hamper development except for the already well-endowed.

3.1.3 Rural Shelter Policies

Outside of certain designated centers (section 2.2.4 above) the government's shelter policy in rural areas is basically that of constructive non-intervention. The Government recognizes that, because of public and private financial constraints it would be impossible to extend to the bulk of the rural population the sort of assistance offered in the urban areas: that this type of assistance would in any case be inappropriate and often unnecessary. "The major part of rural housing must continue to be built, as in the past, by the efforts of rural communities themselves and mainly with local materials" (Development Plan 1966-70, p. 336) It is, nevertheless, recognized also that some form of assistan is required to offset some of the constraints noted in preceding pages of this chapter. Thus it is policy that assistance be offered through official channels for technical assistance, in design and construction techniques; and, on a limited scale, for financing those families who can afford to borrow through conventional channels.

The aims are modest: the requirements of a minimum dwelling size, for instance, are not applied for rural shelter. In theory, however, the Building By-laws are applied; in practice, the local authorities only apply their powers over the use and development of land in the small trading centers. The buildings in these settlements are, as a consequence, of a much higher standard than those adjoining the towns.

There is a case for enforcing minimum standards in settlements exceeding a certain size, especially for reasons of public health control. Nevertheless, the team was advised that the present standards are applied with excessive rigidity, resultin in unreasonably high costs and displeasing environmental uniformity. The study that is presently under way to examine legal requirements will, it is hoped, pay specific attention to the question of appropriate standards to be enforced in thes circumstances. The team was also informed that it is possible to construct houses of traditional materials - which presently tend to be despised - which would conform to present requirements of lighting, ventilation and so on.

3.1.4 Locational Policies

In order to guide public and private investment in the rural areas into a rational physical pattern, the Physical Planning Department of the Ministry of Lands & Settlement has designated certain settlements as "service centres", ranked in ascending order of importance as local, market, rural and urban centers. The methodology used for their selection was based on the Central Place Theory, modified to suit local conditions. One local center is intended to serve a catchment of 5,000 rural people; one market center, for every 15,000 people; one rural center for every 40, - 50,000 people and with

a resident population of at least 2,000 by the end of the century; and one urban center for every 120, - 150,000 people. To date there are 1.681 such centers throughout the country. A limited number of towns have also been designated "growth centres".

The rationale of such a ranking is that isolated and scattered populations may better be served by concentrations of urban services in selected settlements; and that the small towns "will form a level of urbanization which is large enough to be economically served with public water supply, sewerage disposal, electricity, postal, telephone and banking facilities, etc. Once a centre has its basic infrastructural services, it will tend to attract commercial and industrial development which will enrich the lives of the people of the rural areas and provide improved employment opportunities" (3rd Plan, p. 120).

An unpublished study for the Government ("National Urban Development Strategy") notes that this policy is unlikely to be successful, since it is spreading resources too thinly. It suggests that urban and rural centers should be strengthened by various means, and that infrastructure investments in market centers should be concentrated only on those with the most dynamic potential.

The team also observed that, whatever the successes and merits of the official approach to infrastructure investment, construction of non-farm rural shelter is not being concentrated in these designated settlements; especially in Rift Valley Province, there is a general spread of unplanned settlements along the major trunk roads and along settlement approach roads.

An additional problem, especially for the most densely-populated rural areas is that there is a need to exploit scarce land resources to their maximum. Thus, the report of a University program conducted in Machakos District suggested, "The scattering of detached dwelling units which compose the homestead is felt to be uneconomical and wasteful in terms of land utilisation... Improvement is required in siting and orientation of the building composing the homestead...Due to land shortage, there is a need to compact the dwellings on a reduced area."

3.2 Institutions Responsible for Rural Shelter Development

Responsibility for planning and management of development in the rural areas is shared between the Ministries of Finance (with the Office of the Vice President), Economic Planning, Local Government, Works, Lands and Settlement and the National Environment Secretariat in the Office of the President. Their functions are outlined in section 5.4 of the previous chapter.

3.2.1 Ministry of Housing and Social Services

The parent ministry, of Housing and Social Services, has the responsibility for the formulation of rural housing programs and policies and of overseeing the performance of associated research and executive agencies, including the National Housing Corporation, the Karen Village Technology Unit and the Housing

Research and Development Unit. Other than through these agencies, the Ministry is in a position directly to influence rural housing through its Provincial Housing Officers. Apart from fulfilling the role of channelling field information back to Nairobi, they are empowered to extend "encouragement"and technical assistance by working alongside staff from the Ministry of Health and the Community Development Department" (2nd Plan, p. 515). In practice, the team learned, these officers do not always fill this role adequately, concentrating much of their attention on enforcement of rent control legislation.

3.2.2 The National Housing Corporation

The NHC, the executive arm of the Ministry, administers the public housing schemes in the smaller towns and the Rural Housing Loan Fund.

Loans from the latter were first instituted in 1967/68, to assist owners to improve or complete construction that they were unable to finance from their own resources. Loans are currently restricted to K£1,500 or 50 per cent of the construction cost, whichever is the less. Additionally, the value of the property must be between K£500 and K£8,000 and exclusively for the residential use of the applicant. Loans are made available at an interest rate of 7½ per cent per annum; over a maximum period of 10 years for employed applicants younger than 45 years old and who have registered a land title deed; and over a maximum period of 7 years for employed applicants without a title deed, or unemployed applicants with a title deed. The maximum age of applicants is 55. In addition, applicants are expected to carry out "construction to the extent of a minimum of 30% of the estimated cost of the house before any part of the loan may be released".

In the five years to 1978, funds of K£1.5 million were to be made available for these loans; it is understood that all was taken up. Yet despite the evident popularity of the scheme, its administration is complex, the default rate is reported to be high, and the continued operation of the scheme is running into opposition.

Some of the problems which the scheme is facing include the following:

- the isolated and scattered locations of the beneficiaries make inspections difficult, and often delay them;
- the plans are checked only for design, not for compliance with by-laws; important factors such as site layout, type of soils, impact on accessibility and adjacent properties may be overlooked;
- insistence on high building standards, which cannot be afforded by the majority of the population;
- requirements that there be security for the loan also excludes a large part of the population who could be in a position to afford repayments; and
- the difficulty of foreclosing.

The team also found that there is widespread ignorance of the availability and nature of these loans among people who would be eligible for them.

3.2.3 The Karen Village Technology Unit

This Unit, located in the suburbs of Nairobi, was set up jointly by UNICEF and the Youth Development Department of MHSS, in order to investigate the application of simple and inexpensive materials and techniques; to improve on traditional technologies in food production and preservation, fuel conservation, sanitation and water collection. The Unit also experiments with improved traditional building materials. Although building blocks developed here have been approved by the Ministry of Works, further techniques remain to be investigated. Some of the Unit's activities are being actively adopted by the people of Karai Location (some 30km outside Nairobi), with the assistance of UNICEF. At the Ahero Family Life Training Centre (near Kisumu), too, an experimental two-roomed house has been built by the Unit, of mud and wooden poles, roofed with a mixture of papyrus and reeds, and with wooden doors and windows, for a cost of about Shs 1,600 (1978 prices).

3.2.4 The University of Nairobi

The Housing Research and Development Unit of the University (see section 4.2 of the previous chapter) has, particularly in recent years, been devoting increased attention to the housing problems of the smaller towns and to design-features of rural housing. Among other studies, the Unit has reported on "Climatic aspects of design, material selection and construction methods of rural housing", on makuti roofing for farmers' houses, and composting toilets. Despite the relevance of this research to contemporary problems, however, there is little evidence that the findings and conclusions are being given any practical application.

Linked with, but separate from the activities of the HRDU, the University's Faculty on Architecture, Design and Development runs a course on rural community development, dealing with the use of appropriate village technology with particular reference to the design of shelter. The course is intended to acquaint architects and physical planners with the implementation of designs that utilise local inputs and which are acceptable to the local population. It should, however, be noted also that these concepts need to be understood and assimilated by other development planners and policy-makers: community participation is an essential link between the government, institutions and field officers.

3.2.5 Village Polytechnics

There are about 200 village polytechnics throughout the country which, among other things, train local people in construction skills: carpentry and joinery, plumbing and masonry, and others. These polytechnics are run on a community self-help basis, with assistance from the Government and interested organisations such as the National Christian Council of Kenya (NCCK). Although increasing the supply of artisans who are able to build and maintain both traditional and permanent structures, these polytechnics do face several problems:

- inadequate capital for buying training materials, tools and equipment;

- inadequate funds for the construction of staff houses, workshops and classrooms; and

- inadequate staff to cover all the institutions throughout the country.

3.2.6 Cooperative and Self-Help Societies

There are a number of cooperative societies throughout Kenya, the primary aim of which is the development of agricultural production and marketing. A few of them have also attempted to promote their members' interests in other ways, including shelter development. One of these is a cooperative farmers' union in Matungulu Location of Machakos District. Members of this society could borrow money in relation to their estimated ability to repay from the proceeds of the sale of their produce. The cost of building materials and hardware purchased from a specified dealer would initially be met by the union, and the individual farmer's account debited in reasonable installments. The scheme was, however, abandoned since the farmers reportedly preferred advances in cash.

Other cooperative societies contacted by the team, although giving priority to agricultural production, expressed an interest in also giving loans to their members for the purposes of shelter improvement.

Otherwise, shelter-oriented self-help groups exist throughout the Republic under different names and forms. The most successful of these is the Mabati*Women Groups of Central and Eastern Provinces. These groups are reported to build or renovate some 5,000 houses every year, also contributing funds towards furnishing houses, buying water tanks and grade cows for members. Other groups contribute in different ways. For example, self-help groups have been formed in Karai for the construction of water jars (to hold 3,000 litres); and, in Coast Province, women's building clubs exist, assisted by the MHSS. In Taita-Taveta, there are community groups helping with roofing repairs and the like.

3.2.7 The Kenya Commercial Bank

The Kenya Commercial Bank announced its first rural housing loan scheme in 1971, intended to enable rural dwellers to improve their living conditions. It had apparently only a small impact on account of the relatively severe loan terms and conditions. In mid-1978, however, the Bank announced a Shs 40 million Rural Homes Project, specifically to assist small-scale farmers to erect houses on their farms. The terms, nevertheless, remain relatively unattractive: the maximum loan is of K£3,000, not exceeding 75 per cent of the cost of construction; repayment is over 7 years at an interest rate of 9½% per annum, plus a committment fee of 1 per cent in advance. Suitable designs and a"book on instructions" on building methods are available to potential borrowers at a cost of Shs 1,000/-.

* Mabati - Swahili for galvanised currugated iron (roof) sheets.

It should also be noted that the Bank has a policy of lending for all purposes to rural applicants at least 50 per cent of the deposits made in rural branches.

3.2.8 The Institute of Cultural Affairs

The US-based Institute for Cultural Affairs started a project in Kawangware, Nairobi, in 1975: upgrading the local economy, improving and modernising shelter-related facilities and services, and providing practical training for generating employment. It would appear that the methodology of the project could readily be adapted for application in rural villages and small urban centres.

4. The Role of Rural Shelter

Whereas policies in Kenya have accepted the economic and social importance of official intervention in and support for the urban housing market, attitudes towards the role of rural housing in community welfare and development have remained, at best, unclear. Previous sections of this chapter have suggested that the welfare of a significant proporation of the country's population is deteriorating despite a general improvement in agricultural production and per capita incomes. And, as is noted in the following section, the Government plans an extensive attack on rural poverty without, however, incorporating a significantly greater emphasis on housing.

It thus remains to point out the various roles that housing and the development of housing can play in the rural development strategy. That the team has been unable, in the context of the present study, to quantify the impact of increased intervention should not be taken to mean either that this cannot be quantified or that the issues discussed are unimportant.

Firstly, then, it is recognized that the concept of "shelter", apart from encompassing the basic functions of providing protection from the elements and from intruders, also connotes the provision of utility services and social facilities. It is generally noted that provision of such services has a higher social rate of return than does the improvement of housing structures alone (although - to our knowledge,- such a comparison has not been attempted for the Kenyan rural situation). There is a complex association between rural incomes and welfare on the one hand, and the quality of shelter and associated amenities on the other. It would, then be as meaningless to promote rural services without also ensuring the possibilities of improved housing as it would be to provide better houses without the related social and physical infrastructure.

Thus one of the goals of rural development is to improve levels of health. This is being partially achieved in, among other ways, by the introduction and strengthening of various preventive and curative health services, by a growing emphasis on nutrition, and by the extension of water systems. Nevertheless, it is difficult for a person to remain healthy when living in a house with a leaking roof, for instance, or with floors or walls

that harbour insects carrying infectious diseases. These conditions do hold in many parts of the country, simply because the householder now cannot afford to build in the only ways he knows.

Health is closely related to productivity. Attempts have been made to demonstrate the relationship also in Kenya. Results show (Burns, 1970) that occupancy of a "better" house (which, indeed, may have different meanings) leads to an improved work performance; similarly, insecurity of tenure tends to operate in the opposite direction. That these factors may have largely psychological origins do not make them any less real. Improvements in housing might therefore be expected to lead directly to increases in rural incomes and to development benefiting a sector of the population wider than the rich majority.

An increased volume of housebuilding also stimulates the creation of employment. Thus, at the beginning of this decade it was estimated that 1,000 man'years of work are created for every K£1 million spent on urban house construction. Accepting that inflation will have considerably reduced the employment creation figure, and that the calculation would, in any case, be different in the rural areas: still, a quick calculation will show that even small relative increases in rural construction will substantially raise employment. A part of this increase would be in direct construction; part indirectly through enhanced production of materials. The extent that this employment may be created in rural areas (as opposed to using urban craftsmen, and increasing employment in Nairobi-and-Mombasa-based building materials enterprises) is related to the supply of relevant resources outside the towns. In turn, this suggests policy measures which will be examined in the following section of this chapter.

As noted earlier, housing is perhaps the most obvious physical manifestation of cultural patterns throughout the country. Inability to construct dwellings in the traditional pattern obliges a household to alter its way of life, generally in a distasteful manner. Whilst some changes of attitude are necessary (on matters of sanitation, for instance, or on the education of children) and others are probably inevitable (among others, recognition that it is not the inalienable right of every citizen to own a piece of land), yet others are neither necessary nor desirable. Thus there are few good developmental reasons why family interrelationships should be strained, as is presently beginning to occur due to constraints in the production of rural housing. Removal or mitigation of these constraints would, in turn, enhance the possibilities of cultural continuity.

Apart from these arguments, it should be noted that increased governmental intervention in rural housing can also assist to bring about some desired structural changes. Thus it is policy to reduce migration to the larger urban centers. It is recognized that the relative quality of urban and rural housing plays a minor role directly in influencing migration. Yet migrants to the cities are, by and large, motivated by the possibilities of earning a higher cash income in the urban areas; a substantial part of this income, once earned, is

remitted back to their places of origin: these remittances are, in large part, intended for the improvement of rural shelter. If it were possible to devise improved mechanisms for lowering the price of rural shelter, then this particular incentive for migration would also diminish.

Similarly, greater injection of public funds into rural housing can be used as a locational tool. National policies on location are becoming more sharply defined, and it would be possible to strengthen the means for their implementation by, for instance, offering more advantageous loan terms to individuals wishing to build in designated centers than in scattered homesteads. Such a tool could also bolster, or could work against, the utilisation of public funds as an income-redistributive measure. With the emphasis over the coming years on the alleviation of poverty, presumably greater attention will be paid to benefitting the poorest members of the community. Given that there are public funds to be expended on rural housing, the options are there for the reduction of inequalities.

It is for these reasons (improvement of health; increases in productivity; expansion of employment opportunities; maintenance of cultural stability; the promotion of locational policies; and the reduction of income inequalities) that it is argued that the provision of rural housing in Kenya is potentially as important as an integral part of the overall development strategy. Given the constraints discussed throughout this chapter, then, it is recommended that increased attention should be given to this sector.

5 The Next Five Years

5.1 The 1979-1983 Development Plan

The 4th Development Plan calls for a well-argued shift in policy towards a greater emphasis on the fulfillment of the basic needs of society and, in particular, on the alleviation of poverty. Within the rural population, three specific groups have been identified as in need of especial assistance: the pastoralists, small farmers and landless rural workers. A wide range of measures is proposed to help these people, from the extension of pre-school feeding programmes through the arid and semi-arid areas of the country, to the subdivision of large mixed farms in high-potential agricultural areas.

The proposals for public financial assistance and intervention in rural housing necessarily remain modest, although more extensive than in previous Plans. The impetus for rural shelter development is expected to continue to originate from the people themselves through self-help, from individuals, private companies or through the cooperative movement.

Specifically, K£4 million is allocated from the vote of the MHSS for the construction of some 6,000 units in the smaller towns (other than the eleven municipalities) over the five years. This is to be supplemented by the construction of an unspecified number of units from the votes of other ministries. The NHC's rural housing program expenditure is very considerably higher

than in the past, with a proposed expenditure over the period of K£6.8 million for loans for 6,800 houses.

Whilst this latter program is commendable, it is worth noting that it will satisfy no more than 1 per cent of the need for rural housing (although admittedly a higher proportion of the demand). It must be urged that the expansion of the availability of funds will also be accompanied by an upgrading of information about the service.

As noted in the previous chapter, a new cooperative housing program is to be instituted under the MCD, which would benefit urban and rural areas of the country. For their part, the MHSS will "provide technical, administrative and financial assistance to approved rural housing societies. These societies will enable their members to improve their housing conditions in accordance with their ability to pay for such improvements." An amount of K£3.8 million is allocated from MCD to launch the National Cooperative Housing Agency, referred to in Chapter II.

Among other measures specifically proposed by the MHSS is to "carry out research on the use of local building materials, techniques and suitable equipment, such as block-making machines, that could be used in the improvement of rural housing". This work would be carried out by a new division of the Ministry, in conjunction with the NHC and HRDU.

Elsewhere, in the Plan report, it is stated that "inexpensive building materials and advice on improved construction will be made available in poverty stricken areas" (p.41) without, however, explaining how this is to be done, or by whom.

Although the Development Plan makes no specific reference to essential building materials such as cement and roofing nails nevertheless, it does propose as policy that controls be removed from the prices of most goods, and that the impact of these controls on the supply of others will be reviewed. It should be reiterated that price control has, until now, been cited as a reason for shortages of certain building materials.

Locational policies are spelled out more precisely in the current document than hitherto. Thus, one of the priorities of a new National Land Commission is to find ways of "encouraging people to live in towns and villages near to their land rather than building on valuable farm land" (p. 283).

In addition to the emphasis on the development of Kisumu and Eldoret (section 6.2 of the second chapter), nine smaller urban centers have been selected for "special attention". These are Bungoma, Kericho and Kisii to be promoted "in order to support the development effort in Western Kenya"; Garissa, Isiolo, Kapenguria and Narok, serving as 'gateway towns' linking the arid and semi-arid areas of the country to better developed markets elsewhere in the nation"; and Machakos and Malindi, specifically to draw industrial pressures off from Nairobi and Mombasa (pp. 49-50). Although there are no specifically identified proposals for housing investment in these smaller towns, the MHSS has stated that it will "carry out pilot rural housing projects in settlement areas and other small rural centers".

5.2 Needs and Constraints

The shelter needs of the rural population are readily enough summarised, if less readily quantified. The MHSS has estimated the annual need for new rural dwellings to be of 215,000 units over the coming five years. By quoting such a figure, assumptions are implied on both the nature of a rural "dwelling unit" - which can range from a single tenement room in a small settlement, to a cluster of huts in a nomadic homestead - on household size, lifespan of the average unit and rates of replacement following natural calamities. Using different but equally reasonable assumptions on each of these variables, the team reckoned that the rural housing need could be as little as 125,000 units annually.

Of these, perhaps 10 per cent would be for nomadic peoples; 15 per cent for employees of private and public sector enterprises in rural areas, both farm and non-farm; and the remaining 75 per cent or so for smallholders and landless agriculturalists. A further 5,000 or so units would be required annually in the "intermediate level" towns. (These figures cannot be rigorously supported by firm data, and should be taken only as order-of-magnitude indicators).

Analysis of demand is yet more hazardous in the borderland between cash and traditional economies. Suffice it to reiterate that relatively few of the non-employed rural households have a dependable cash income, although most have access to cash at some times.

Until recent years, rural shelter requirements have been simple and simply accommodated, requiring little or no cash and few other resources from outside the immediate neighborhood of the householder. As noted in the preceding pages, however, circumstances are changing. The most important of the three principal reasons for this change would appear to be a shortage of local building materials, this requiring either a reduction of already low sanitary standards, or a change of cultural values, or the use of more expensive materials imported into the area; or a combination of these. The second factor, caused predominantly by the increase in population and exacerbated by several other features, is a relative shortage of cultivable land in many parts of Kenya, in turn leading to increased densities and to pressures for nucleation of settlements. The third factor may be described as the realities of development: a changing economic structure (with a growing proportion of wage employees) and demands from individuals and government for higher standards of construction and sanitation.

Findings of a team from the University of Nairobi's Department of Architecture, from field work in three villages of the Kangundo area of Machakos, provide a useful summary of certain perceived needs:

> "<u>Kitwii</u>
> The scattering of detached dwelling units which compose the homestead is felt to be uneconomical and wasteful in

terms of land utilisation. Water collection from roofs, improved storage of food and improved sanitary facilities are felt to be needs.. Ventilation and natural lighting as well as protection against damp, cold, draft as well as security are concerns.

"Lack of finance, land availability and the availability of cheap materials, skilled labour and technical know-how are main constraints.

Muisuni

"Improvement is required in the following respects:
- Siting and orientation of the building composing the homestead.
- Lay-out of the house plan (permitting a stage-wise construction).
- Circulation on the compound and privacy.
- Thermal and humidity ventilation.
- Protection against fire hazards, smoke and soot.
- Services.

"Lack of finance and technical advice, cost and availability of building materials and the lack of skilled labour are the main constraints.

Kakuyuni

"Due to land shortage, there is a need to compact the dwellings on a reduced area. People expressed their desire to be technically advised on house plans, rain water collection and sanitation. It was specified that a demonstration house would be appreciated.

"Land shortage, lack of finance, technical advice and skilled craftsmen are main constraints preventing improvement."

It has generally been believed that the problem of rural shelter is one of quality rather than quantity. The team now believes that - at least in most densely occupied areas - the problem is both of quality and quantity.

To summarize, the main constraints are:

- Low or non-existent cash incomes;
- Insecurity of tenure and landlessness;
- Restricted loan facilities;
- Shortage of traditional building materials;
- Shortages or non-availability of modern materials, tools and skills;
- Introduced costs because of shortages, modernisation and inefficient controls;
- Socio-cultural constraints; and
- Unclear national committment to the improvement of rural shelter conditions.

Excepting, for the moment, the situation of wage employees, it is evident that solutions similar to those adopted for the larger urban areas are irrelevant for the bulk of the rural population: neither mortgages nor economic rentals can

be afforded; nor can the national purse stretch to subsidise on any significant scale. (The allocated expenditure on the rural housing loan fund over the coming years amounts to some Shs 200 or less per new housing unit required.) It is equally evident that the present rural housing situation is deteriorating, although public funds are being well spent on the development of associated services.

The final section of this chapter therefore relates the needs and constraints with potentials for further action, making recommendations for governmental initiatives which would ameliorate the problems both of quality and quantity of rural shelter. Broadly, the proposals aim both to reduce the cost of new shelter, marginally to reduce the need for new shelter (by improving maintenance), and to make new shelter available to some of those households with neither cash nor land as well as to those with both.

5.3 Recommendations for Action

5.3.1 NHC Rural Housing Loan Fund

The reported high level of demand for the concessionary loans offered to rural householders by the NHC indicates to the team that the scheme is worth continuing; that this view is evidently shared by Government is witnessed by the commitment of the Fourth Development Plan to quadruple the volume of loans over that of the previous Plan period. It has not been possible within the time available to determine with any precision who and where the beneficiaries are, nor whether the KES.6 million now to be allocated is a reasonable figure. It is therefore recommended that the NHC more carefully monitor applications for and approval of loans and the use to which they are put; in order that a full review may subsequently and periodically be made to determine the effectiveness of the loans; and that, if justified, external loans may be solicited to augment the fund.

The team also recognises that there are weaknesses in the administration of these loans; and therefore welcomes the forthcoming study of the NHC with a view to rectifying some of these deficiencies. During the course of this review it would be appropriate to re-examine the rate of interest charged on rural loans: at 7½% per annum, this is among the lowest rates charged on any housing loans in the country, which may not be appropriate for the present group of beneficiaries who are among the richest of rural householders; the rate arguably does not fully cover administrative costs; and presumably does not include a risk reserve to cover defaults.

5.3.2 Provincial Housing Officers

The team noted that at least some of the Provincial Housing Officers (PHO) were ineffective in relaying information between central government and the people. Specifically, some appeared ignorant about the Rural Housing Loans and, as such, were unable to advise potential beneficiaries on the possibilities open to them.

The MHSS is clearly unable, from its offices in Nairobi, either to pass detailed advice on housing to all potential users of its services; and other officials in the provincial, district and local administration who might be in a better position to do so, cannot be expected to understand all the complexities of housing administration. Conversely, the MHSS cannot make fully-informed policy decisions without detailed knowledge of local needs and demands. That Ministry's PHO's are able to provide such a feedback. It is therefore recommended that the offices of the Provincial Housing Officers be strengthened in order that such an interchange of information may become effective. It would probably be appropriate for the Ministry to initiate a training program for PHO's and their staff.

5.3.3 Materials Pricing

There is good theoretical justification for the government to control prices of building materials, as of other essential commodities. It has, however, proved to be a complex exercise - particularly in times of rapid inflation - to determine just what is a reasonable price to be charged by wholesalers, retailers and manufacturers. These difficulties have led to a situati in which some prices are set at levels below that necessary to induce sales, stocking or even production. It has frequently been found that modern building materials are either not available in certain rural localities or, when available, may be sold informally at prices which reflect the illegal nature of the transaction.

It is therefore recommended that prices of all building material be decontrolled and permitted to find their own level. It is, however, noted that such an action could, because of market imperfections, lead to some unwarranted price increases. It is therefore also recommended that the price and availability of of key building commodities throughout the country be carefully monitored, both before and after price controls are removed. If monopolistic (or monopsonistic) situations do develop to the detriment of customers, then additional action - such as the establishment of government materials suppliers - should be considered.

5.3.4 Strengthening The Physical Resources Base

One of the main reasons for alarm about rural housing is that traditional building materials are fast disappearing, therefore becoming expensive even when available. Particular concern has been expressed over the supply of thatching material and of timber. It has been beyond the scope of the present study to investigate these specific issues in depth; it would thus be inappropriate to criticise the Ministry of Natural Resources, for example, of inactivity in protecting forests from destruction, or of not sufficiently actively promoting new planting. The team has noted the proposals in the Fourth Development Plan that a further 366 square kilometers be afforested during the coming five years. Casual observation, however, suggests that the demands of the modern forestry industry may be incompatible with demands for small-scale local use of wood for timber poles and charcoal. The team

has therefore also noted the passing reference in the Plan document to a local afforestation program, for which £2 million is allocated; and, from other sources, to action being taken by the National Council of Women for Kenya in promoting local afforestation.

The team nevertheless recommends that the National Environment Secretariat - which has interests over and above those noted above, and wider than those of the Ministry of Natural Resources - follow up the question to determine the best way of coordinating and promoting small-scale local production of timber for building and possibly also for charcoal.

It is also recommended that the suggestions arising from the HRDU study on roofing, on the marketing of coconut leaves for makuti thatching in the coastal area, be pursued, possibly through the Ministry of Cooperative Development. Further suggestions on development of local building materials industries should be a priority subject for study by the Ministry of Commerce and Industry.

5.3.5 Shelter Design and Appropriate Technology

Several researchers, especially those working through the HRDU and the Karen Village Technology Unit, have been investigating designs for shelter and related facilities that are alternative to both traditional Kenyan rural styles and to "modern" urban solutions: alternatives that are cheaply and easily made from available materials. More work remains to be done, particularly in investigating aspects of shelter and materials design that have been proved appropriate elsewhere in the world but which would need adaptation to suit local climatic and cultural needs and locally available materials. (Coconut coir could be used as a walling material and/or stabiliser in sun-dried bricks; mud could be used more effectively in the drier parts of the country; solar heating can be adapted for brick-baking; wind power can be useful in marginal areas as a source of power for pumping water and in other ways). It is recommended that any application for research along these lines should be favorably considered.

The team believes that the findings of the HRDU and the Karen Unit are not widely known, except to a circumscribed urban elite and those few people of Karai and Ahero. It would be beneficial and is therefore recommended if appropriate and possibly experimental shelter designs be erected in key locations throughout the country, that potential users may be exposed to the possibilities they offer. Suitable places would be adjacent to chiefs' offices, in market places, and near district and divisional headquarters.

It would, however, appear that although established personnel may be able to design such a scheme, no finances have currently been earmarked which could be utilised for the construction of these demonstration units. It would be appropriate for the HRDU to prepare a detailed request on these lines for the attention of local or international financing agencies.

5.3.6 Education

Apart from a lack of knowledge about alternative technologies, constraints are beginning to appear in the availability of skills to erect and maintain houses other than in purely traditional styles. A certain amount of support for the development of such skills is available from the existing network of village polytechnics, which - according to the current Development Plan - is to be extended further. The team supports the placing of additional emphasis on imparting skills and understanding relevant both to the construction and maintenance of building in rural areas.

The team also believes that housing education should start at the pre-school stage, where children can be taught elementary shelter-related drama: making toy houses, mud bricks, clay tiles and so on. As their education progresses, they will better be able to appreciate the final products of the tools and materials they are by then accustomed to. At a later stage, the children would get involved in woodwork and the manufacture of wood products; and can be introduced to the concepts of maintenance.

5.3.7 Rural Housing Cooperatives

It is apparent that a growing proportion of rural households will only be in a position to build in a manner acceptable to both themselves and the public authorities if they can obtain loans. The problem of giving rural shelter credit, however, is the lack of sureties that can be offered. Thus where land has not been adjudicated - and this tends to coincide with agriculturally-poor areas - loans are hard to come by.

If house construction or improvement could be incorporated with traditional functions of producer cooperative societies, then their members would also be able to borrow money for shelter. Other forms of shelter cooperatives should be examined, including an extension to national level of the activities of the Mabati Women Group. There are other cooperatives involved in production of building materials which could be encouraged. These latter could include the Kaveta Bricks and Blocks Cooperative Society (Kitui), which has already approached the Government through the Ministry of Cooperative Development for a clay expert; brick-making cooperatives in Machakos and Luanda/Maseno; and for the development of makuti and coral/limestone block-making in the Coast Province.

With these and other potentials, it is recommended that all possible assistance be given towards the establishment and operation of the National Housing Cooperative Agency.

5.3.8 Roof, Wall and Floor Loan Schemes

A particular focus of house improvement should be on roof, walls and floors.

In attempting to overcome problems of lack of individual security for loans for such purposes, it might be possible to form village societies or self-help groups to provide collective security for all members of the group. This has been tried in Ghana, in the form of roof loan schemes, with a considerable measure of success; a somewhat similar scheme has been used in Cameroon. The Ghanian scheme operates on a self-help basis, using credit in the form of technicians and community workers. Loan recovery from non-employees is by way of shares against crop production. There have been difficulties in the enforcement of agreements towards the end of the project period. These difficulties would appear not to be insuperable, but should be acknowledged in the preparation of any similar scheme for Kenya. It is recommended that the National Cooperative Housing Agency, once established, takes as an early priority a study to determine the potentials of such a scheme in Kenya.

5.3.9 Large-Scale Rural Employer Housing

Unlike their counterparts in urban areas, employees of large-scale undertakings in the rural areas - whether these be tourist enterprises, agro-industrial undertakings, large farms or government establishment - are often at the mercy of their employer for the provision of shelter.

Whereas some enterprises take their responsibilities seriously, making reasonable attempts to meet the basic needs of their workers, others do not, with the result that their employees are housed in poorly-maintained tenements or are obliged to find their own accommodation at a considerable distance from their employment and necessarily generally in unsanitary conditions. As a first step towards alleviating the shelter conditions of this group of people, it is recommended that the provisions of the Employment Act be enforced in requiring certain classes of employers either to house their workers or to give them housing allowances. Subsequently, the Act would be strengthened by defining more clearly the circumstances in which allowances may not be an acceptable alternative (such as when the supply of rental housing within a specified distance falls below a certain norm); and the MHSS would provide a set of guidelines as to what constitutes acceptable shelter.

5.3.10 Nomadic Pastoralists

In view of the special circumstances of this group of people and the lack of a clearly defined national policy for the improvement of their welfare, the team has not made any recommendation concerning the shelter of nomadic pastoralists.

5.3.11 Shelter in Small Urban Centers

Apart from the recommendations above concerning the NHC's Rural Housing Loan Scheme, the team feels that the best way of meeting the needs of low income non-farm workers in small towns is probably by provision of some form of serviced plots. Since this subject is under study by the HRDU, no separate recommendations are being made on this score.

5.3.12 Assistance From Foreign Donor Agencies

Of the recommendations enumerated above, the following are fields in which the AID or other agencies could give assistance:

- If systematic study shows the need and administrative capability, additional funds could be directed to the NHC's Rural Housing Loan Scheme;
- Training programs for staff of the offices of Provincial Housing Officers;
- Financial and technical assistance for studies on appropriate designs and technology for rural shelter;
- Financial and technical assistance towards local-resource afforestation programs;
- Training programs for village polytechnic instructors;
- Technical assistance in the establishment of a National Cooperative Housing Agency;
- Assistance towards a study to determine the feasibility of a roof, wall and floor loan scheme.

* * * * * * *

ANNEXE I

The Settlement Villages and Agro-Industries

In the Kenyan context the notion of village is riddled with ambiguity of definition. In many places the village is often conceived of in socio-cultural rather than physical terms. Thus people may talk of a village even where no agglomeration of dwellings is apparent so long as several scattered homesteads within a geographically contiguous area are occupied by people who constitute a lineage, clan or other kinship group. Given the relative simplicity of shelter, the abundance of traditional building in the past and consequently the ease of movement to new homesteads, human habitation was conditioned by socio-cultural dictates; people did not adapt themselves to fixed houses. For given the extant customary rules of avoidance and distance between certain relatives it was necessary that in the establishment of new homesteads the position of buildings did in fact provide solutions to certain socio-cultural and religious problems.

As a result of increased population pressure, economic modernization, changes in tenurial rights over land or the necessity for greater administrative control, the indigenous people have been forced to change their settlement patterns. Village settlements in rural Kenya today include some predicated upon religious affinities (e.g. Karai village with Islamic foundations), or those originating from the needs for strategic control of populations (e.g. many villages in Central Province formerly started as a counter-insurgency measure during the Mau Mau revolt). Today many such villages, as indeed some of the service centres, provide shelter to many of the landless who have since been displaced as a result of population pressure and the land tenure reforms already discussed.

But the most significant impulse in recent times for the establishment of village settlements has come from government development schemes. An example of this is provided by the irrigation schemes in which dwellings are grouped together, partly to allow for the maximum rational use of irrigated land for agricultural production. It must be pointed out that in all the irrigation schemes in Kenya, with perhaps the exception of recent expansions in Mwea/Tabere, the quality of shelter, provision of basic services and amenities and the level of social integration in general paint a very disappointing picture.

In nearly all the schemes, the tenants, many of whom had been original residents on the land acquired for irrigation, occupy the land as temporary tenants and may be evicted if they fail to satisfy conditions laid down by the management. The house provided, although varying in design, is generally of mud walls and corrugated iron roofing, one single unpartitioned room with no provision for storage or kitchen. There is no provision for domestic water and often tenants resort to the irrigation channels whose water is sometimes polluted by insecticides or chemical fertilizers. Domestic fuel has to be purchased often from significant distances and at very high prices as indeed are food requirements.

As one scholar has observed with respect to Asia, most settlement programmes are designed to achieve something other than to create optimal human settlements, instead, increased agricultural production, opening up of new lands, alleviation of rural poverty, providing land to the landless, etc. are the main objectives. (A.A. Laquian, 1979) With the experience of irrigation settlement programmes in Kenya one cannot avoid concluding that their primary objective is to increase agricultural production. With respect to the quality of shelter and general social welfare, clearly the example give by the government here should not be encouraged elsewhere. Indeed there is an urgent need for a complete overhaul of the policy and practice governing the provision of shelter and other social services in all the government sponsored irrigation settlement schemes.

Given the appalling performance of the government itself in provision of rural shelter and other amenities as is exemplified by the case of irrigation settlement schemes it is not surprising that it has been very difficult to persuade employers in agricultural industries to improve the quality of shelter for their employees. Being among the earliest economic enterprises dating back to Kenya's colonial history, plantation agriculture plays a very important role in the national economy. The large farm sector employs about 260,000 workers of whom it is estimated that less than 50 percent are housed by the employer.

Historically, employees in agricultural plantations have been the most deprived in terms of shelter and social services. In the past the majority of workers in this sector were provided at best with a single room of the most rudimentary basic shelter and sometimes even the single room was shared among two or more workers. The logic appears to have been to provide the worker not with dwelling space but rather only with a bed space. And indeed this may have appeared justifiable at an earlier time when labour migrants were "target satisfiers", working for only a short time and returning to their places of origin. But now this is not the case and plantation labour except for the most seasonal tasks has become relatively more permanent. Housing conditions, however, continue to be very poor, and although the government has often urged such employers to improve housing conditions for their workers no clear mechanisms appear to have emerged for the enforcement of such government directives.

Characteristically, the older agro-industries, coffee and tea, still provide the poorest housing and other social amenities for their workers, and their impact on the surrounding rural communities has generally been diffused. This is partly due to the fact that land alienation, displacement of populations and any change in the indigenous economy were bound to have less dramatic effects at the turn of the century than they would today. It was relatively easy then to relocate and start a new life elsewhere since there was a least some land frontier. The varied impact of agro-industries on settlement, on rural settlement and housing quality in Kenya today is

summarised in the following brief case studies.*

A. The DCK Company

This company, established in an isolated, relatively sparsely settled part of Machakos district, produces chrysanthemums and asparagus ferns for export to Europe. At the peak of its operation in 1975 the company employed more than 3000 workers. Most of the workers are housed by the company in two separate barrack-style housing estates. These consist of one-roomed rondavels of mud-and-wattle. These huts have cement floors and concrete foundations but are grass-thatched. The walls are whitewashed and they are provided with a wooden door and shuttered windows. As would be expected these houses are almost constantly in need of repair, particularly the roofing. The company maintains a team of 30 workers for this task, but this often proves inadequate.

As in other agro-industries the provision of such cheap housing appears to be dictated by what the investors have come to regard as a fair rate of return. Each rondavel was estimated to cost about $140 in 1975. All the basic important social amenities such as health clinic, nursery and primary schools, commercial and cultural facilities are provided within the estate.

Generally, the compound is kept extremely clean although the monotony of buildings and the complete lack of vegetation is asethetically too ascetic. As in other agro-industries, the housing provided by the company, especially for the low income workers is not conducive to family life. Indeed the company has been reluctant to accommodate wives and children except on condition that the wives become employees. Partly as a result of this policy and because of the geographical isolation of the industry, the development nearby of "spontaneous" settlements has been stimulated. One such spontaneous development, Changinywe, boasts a number of shops, a daily market, bars, hotels and brothels. About five years after the establishment of the DCK estate it had a population of about 1000 people.

Because of the stringent standards within the estate Changinywe provides some essential services to the estate workers. At the same time it provides some means of livelihood to a number of people from the surrounding area. Because of the serious health problems this spontaneous settlement posed and the fast rate of its growth, the government has since taken the initiative to provide it with such basic necessities as water. It was proposed several years ago that it be recognised as a local centre and planned accordingly.

* These case studies have been summarised from more detailed reports prepared on behalf of the Kenya Government by Mrs. Erica Mann of the Physical Planning Department, Ministry of Lands and Settlement.

[illegible] the DCK company provides the majority of the requisite community services to its workers, the need for the development of social infrastructure in the nearby settlements of Masongalani and Mashini has not arisen. Yet each of these centres and other far flung centres like Kibwezi appear to have benefited from the establishment of the company in this area through increased trade and prosperity among some of the farmers who have been providing vegetables and other produce to the shops in the DCK estate and at Changinywe.

B. Mumias Sugar Company

This company established in one of the more densely populated areas of Kenya in Kakamega District has had a fairly significant impact on settlement pattern and housing in the immediately surrounding area. The company employs more than 3,000 workers more than half of whom are not provided with company housing. Because of inability by the government to provide housing for the workers as had been planned, the company has provided accommodation in some farm estates plus a permanent camp at the factory site. It would appear that the decision to scatter company settlements was made deliberately to avoid the development of a company town.

All the houses in the settlement units are made of prefabricated cement panels and asbestos roofs and are provided with running water. Although they are relatively large, most of the housing units are overcrowded often by visiting friends and relatives.

But only one of these settlement units has been found to constitute a neighbourhood. All the other units have had to rely on social amenities and community infrastructure outside the sugar estate. As a result of the tremendous demand for housing, many boarding houses have sprung up in Mumias itself and along the road connecting the town to the estate. Most of these are temporary mud and wattle houses, providing only the most rudimentary sanitation. Many of these buildings have been constructed in such a hurry that they often appear to be just about to collapse. Because of the attractive house allowances paid by the sugar company it is understandable that so many entrepreneurs have responded to the housing demand by erecting dormitory shacks on land otherwise zoned for agricultural use. Two such unauthorised developments are Shibale and Elukeio.

An important factor accounting for the rapid unplanned development of Mumias and the surrounding area was the displacement of more than 1,000 families (approximately 6,000 people) on whose land the factory and nucleus estate were to be situated. Although residential plots were made available to some of these people in Mumias township not all of them could be accommodated and some people purchased land from other families who subsequently moved. The general result has been the creation of a sizeable non-agricultural population - most of whom are today housed in unregulated housing developments mushrooming haphazardly within the vicinity of the sugar estate.

Developments in these areas are of a more permanent nature and will soon have to be legitimized either by their incorporation into a wider Mumias plan or by administration by the Commissioner of Lands. For given the imminent expansion of sugar production by the Mumias factory and the consequent expansion of labour, housing demand for factory and estate workers is likely to be even greater.

Unlike many other agro-industries the Mumias Sugar Factory has had a profound impact on the lives of some 8,000 cane outgrowers and their families. Although the outgrower scheme was initially restricted to farmers within a radius of 12.5 kilometres, many farmers beyond this limit have switched to cane growing in the hope of selling their cane to the factory. This situation has led to a glut of cane relative to the present capacity of the factory.

ANNEXE II

NATIONAL HOUSING CORPORATION - APPENDIX IIA

REVISED CONDITIONS FOR GRANTING LOANS TO INDIVIDUALS FOR CONSTRUCTION OF DWELLING HOUSES IN THE RURAL AREAS

A. The applicant must be a Kenya Citizen and be creditworthy.

B. The maximum loan shall be K£1500 or 50% of the estimated cost of a house whichever is the less.

C. The rate of interest shall be 7½% per annum.

D. (i) The maximum repayment period on annuity basis, where a title deed has been charged in favour of the Corporation and the apparent or certified age of the applicant is less than 45 years, shall be 10 years. In all other cases the maximum period of repayment shall be 7 years.

(ii) Where no title deed has been charged or produced the maximum period shall be 7 years in respect of an applicant who is employed; and

(iii) In the case of unemployed applicants, repayment period is restricted to not more than 7 years and the applicant must, in addition to producing a land title, also make an arrangement satisfactory to this Corporation as to how he will repay the loan by means of a Banker's Order. In this case it will be mandatory for the applicant also to produce someone of means and good reputation whose annual income is not less than half of the amount of money borrowed, to enter into the Loan Agreement as the applicant's Surety.

E. Applications from persons who are over 55 years of age and are not employed and have no title deed SHALL NOT be considered.

F. A successful applicant shall be expected to carry out construction to the extent of a minimum of 30% of the estimated cost of the house before any part of the loan may be released. The loan will normally be advanced in two instalments, the second instalment when there is adequate proof that the money already released has been expended in further construction of the house.

G. A successful applicant shall be required to pay a fee to cover legal and inspection costs of not more than:-

(i) Shs. 700/- for loans not exceeding Shs. 10,000/-.

(ii) Shs. 900/- for loans above Shs. 10,000/- but not more than Shs. 15,000/-.

(iii) Shs. 1,100/- for loans above Shs. 15,000/- but not more than Shs. 20,000/-.

(iv) Shs. 1,500/- for loans above Shs. 20,000/- but not more than Shs. 30,000/-.

H. The property for which a loan may be advanced MUST be of a minimum cost of KE500 and MUST be constructed in permanent materials. The maximum cost of a house to qualify for a loan must not exceed KE8000.

I. The applicant must be able to produce the following:-

(i) a title deed to the land on which the house is to be (or is being) erected; and/or

(ii) a guarantee by a bank or by an employer or by a creditworthy person as Surety or any other acceptable security.

J. Where a successful applicant is employed loan repayments SHALL BE EFFECTED by deductions from salary and there shall be no exceptions to this. If he is self-employed, he MUST make a satisfactory arrangement with the National Housing Corporation to pay the monthly instalments (see condition D (iii) above).

K. Loans shall not be granted for the purpose of constructing business premises or for purchasing existing property.

L. Loans shall not be granted to assist in the construction of houses intended for investment purposes such as for leasing to tenants etc.

Main References

GOVERNMENT OF KENYA

1. Housing Policy for Kenya, 1966
2. Development Plan, 1970 - 1974. 1970
3. Ministry of Housing Annual Report, 1967-71. 1972
4. Development Plan for the Period 1974 to 1978. 1974
5. Urban Population Projections during 1969 - 2000. MEP, 1974
6. Internal Migration Patterns in a Selected Area in Kenya. CBS 1975
7. Site and Service Schemes: Guidelines for an Administrative Procedure. NHC 1976
8. Kenya's National Report to the United Nations Conference on Human Settlements. NES 1976
9. Funding of Housing for the Low Income Workers. MFP, n.d. (about 1977)
10. Kenya's National Report to the African Regional Meeting on Human Settlements Finance and Management, NES 1978
11. NHC Housing Programme 1978/1979 to 1982/1983. NHC 1979
12. Economic Surveys. CBS, annual
13. Annual Reports. NHC, annual
14. Human Settlements in Kenya - A Strategy for Urban and Rural Development. Physical Planning Department 1978

FOR GOVERNMENT OF KENYA

15. National Urban Development Strategy (Rural-Urban Balance). Harry W. Richardson, Anupam Khanna, Octavio A. Sampaio
16. Preliminary Report - Kenya Urban Housing Needs / Demand Study 1978-2000. Sarah Ibanda, for MHSS, 1978
17. Cooperative Housing for Low Income Workers. Foundation for Cooperative Housing, for MFD and COTU, 1978.
18. Kenya, Into the Second Decade, IBRD. 1975

HOUSING RESEARCH AND DEVELOPMENT UNIT

19. National Housing Corporation - its aims and activities N.O. Jørgensen 1968
20. Aspects of Housing Policy and Rent Structure in Kenya. N.O. Jørgensen 1969
21. The Mortgage Market in Kenya. N.O. Jørgensen 1970
22. Mathare Valley: a case study of uncontrolled settlements in Nairobi. D. Etherton and others 1971.
23. Two Housing Schemes in Thika: user-reaction survey. Lucy Jayne Kamau. HRDU, 1972.
24. Housing Finance for Low Income Groups. N.O. Jørgensen 1977
25. Institutional Constraints in the Development of Informal Housing Areas. Marja Hoek-Smit 1977
26. Local Authority Housing in Kenya. M.S. Muller 1978
27. Finance for Housing Infrastructure. J. Hagger 1978