BIBLIOGRAPHIC DATA SHEET

1. CONTROL NUMBER
PN-AAH-311

2. SUBJECT CLASSIFICATION (695)
AQ10-1540-0000

3. TITLE AND SUBTITLE (240)
Cassava drying

4. PERSONAL AUTHORS (100)
Best, Rupert

5. CORPORATE AUTHORS (101)
CIAT

6. DOCUMENT DATE (110)
1979

7. NUMBER OF PAGES (120)
26p.

8. ARC NUMBER (170)
633.68.B561

9. REFERENCE ORGANIZATION (130)
CIAT

10. SUPPLEMENTARY NOTES (500)
(In series Ø5EC-4)

11. ABSTRACT (950)

12. DESCRIPTORS (920)
Cassava
Crop driers
Cost analysis
Drying
Storage
Chips

13. PROJECT NUMBER (150)
931086500

14. CONTRACT NO.(140)
AID/DSAN-G-0076

15. CONTRACT TYPE (140)

16. TYPE OF DOCUMENT (160)

AID 590-7 (10-79)

633.68
B561

SERIES 05EC-4
CH 1979

CASSAVA DRYING

Rupert Best

CASSAVA INFOR N CE ER
CENTRO INTERNACIONAL RIC URA T ICAL

CIAT is a nonprofit organization devoted to the agricultural and economic development of the lowland tropics. The Government of Colombia provides support as host country for CIAT and furnishes a 522-hectare farm near Cali for CIAT's headquarters. In addition, the Fundación para la Educación Superior (FES) makes available to CIAT the 184 hectare substation of Quilichao, situated near Santander de Quilichao, Departamento del Cauca. Collaborative work with the Instituto Colombiano Agropecuario (ICA) is carried out on several of its experimental stations and similar work is done with national agricultural agencies in other Latin American countries. CIAT is financed by a number of donors represented in the Consultative Group for International Agricultural Research (CGIAR). During 1979 these donors are: the United States Agency for International Development (USAID), the Rockefeller Foundation, the Ford Foundation, the W.K. Kellogg Foundation, the Canadian International Development Agency (CIDA), the International Bank for Reconstruction and Development (IBRD) through the International Development Association (IDA) the Inter-American Development Bank (IDB), the European Economic Community (EEC) and the governments of Australia, Belgium, the Federal Republic of Germany, Japan, the Netherlands, Norway, Switzerland and the United Kingdom. In addition, special project funds are supplied by various of the aforementioned entities plus the International Development Research Centre (IDRC) of Canada and the United Nations Development Programme (UNDP). Information and conclusions reported herein do not necessarily reflect the position of any of the aforementioned agencies, foundations or governments.

PN-AAH-311

SERIES 05EC-4
MARCH, 1979

CASSAVA DRYING

Rupert Best

Edited by
Trudy Brekelbaum

CASSAVA INFORMATION CENTER
CENTRO INTERNACIONAL DE AGRICULTURA TROPICAL

CONTENTS

	1
Introduction	2
Standards for dry chips	4
The drying process	7
Drying on concrete	8
Drying in trays	11
Drying time	14
Chipping and drying costs	16
Appendix	17
Construction and operation of the cassava chipper	17
Manufacture of the cutter blades	

CASSAVA DRYING*

Rupert Best

Abstract

Cassava roots deteriorate rapidly after harvesting and must be chipped and dried to less than 14% moisture content for storage. Drying can be done on the farm, on either concrete floors or inclined mesh trays. Optimum loading rate on concrete is 5-7 kg/m² and 10-16 kg/m² on trays, depending on wind speed. Drying time depends on climatic conditions and chip loading rate. With an av day-time temp of less than 23°C and more than 70% RH, drying takes 1-2 days at the lowest loading rates. Tray drying is more advantageous in regions with appreciable wind speeds since the night hours can be used and less manpower is required (chips do not have to be turned and respread). A detailed cost analysis is included, as well as details of the construction of the chipper and accessory equipment.

Introduction

The use of good cultural practices and the introduction of improved varieties have shown that cassava yields can be increased two to five times. With this potential increase in production, new problems will arise, both in terms of marketing and utilization of this crop, grown principally by small farmers.

Once harvested, the roots are highly perishable and are therefore usually left in the ground until required for consumption. The fresh roots can be stored in earth

* Research carried out with CIAT's Cassava Program while author was on leave from Tropical Products Institute (56/62 Gray's Inn Road, London WC1X 8LU, U.K.); funded by the Overseas Development Ministry, United Kingdom. Author's current address: Junta del Acuerdo de Cartagena, Casilla 3237, Lima, Peru.

clamps, packed in boxes filled with moist sawdust, or packed in polyethelene bags and treated with fungicides; but these methods are suitable only for small quantities and short periods of time (up to six months). To ensure safe storage over a much longer time without the risk of losses from rotting, the roots must be dried.

Traditional methods exist in many countries for the home preparation of dry cassava-based foods, and technology has been developed for the partial substitution of wheat flour by cassava flour for breadmaking purposes. Dry cassava is also used as a source of carbohydrate for animals, especially pigs and poultry.

In many tropical and subtropical regions, drying can be carried out under natural conditions, utilizing the sun and the wind. If the roots are cut into regular-sized chips, they can be dried in a manner similar to that used for grains (e.g., maize, coffee and beans): the grains are spread in thin layers on wooden trays or concrete floors and turned periodically to give uniform drying. The drying process will be more efficient, however, if the drying power of the wind is used since the fresh roots have a high moisture content (60-70%). This can be achieved by raising the chips off the ground, using inclined trays with mesh bottoms (Fig. 1).

For safe storage the cassava must be dried to below 14% moisture content (MC). The quantity of dry cassava produced depends on the moisture content of the fresh roots: the higher the moisture content, the lower the yield (Table 1). For instance, 100 kg of fresh cassava (70% MC) will give 11 kg less final product than cassava with a moisture content of 60%. It is therefore important to select varieties with a low moisture content.

Standards for dry chips

Companies buying dried crops for incorporation in compound animal feeds often impose standards to maintain the quality of their product. The value of the dried product will depend on whether these standards are met. Table 2 gives a range of specifications for the principal constituents of dried cassava chips. Moisture content is the most important factor and depends on efficient drying. The cassava variety and harvest age determine starch content although high percentages of ash and fiber will reduce the percentage of starch. Dirty roots will

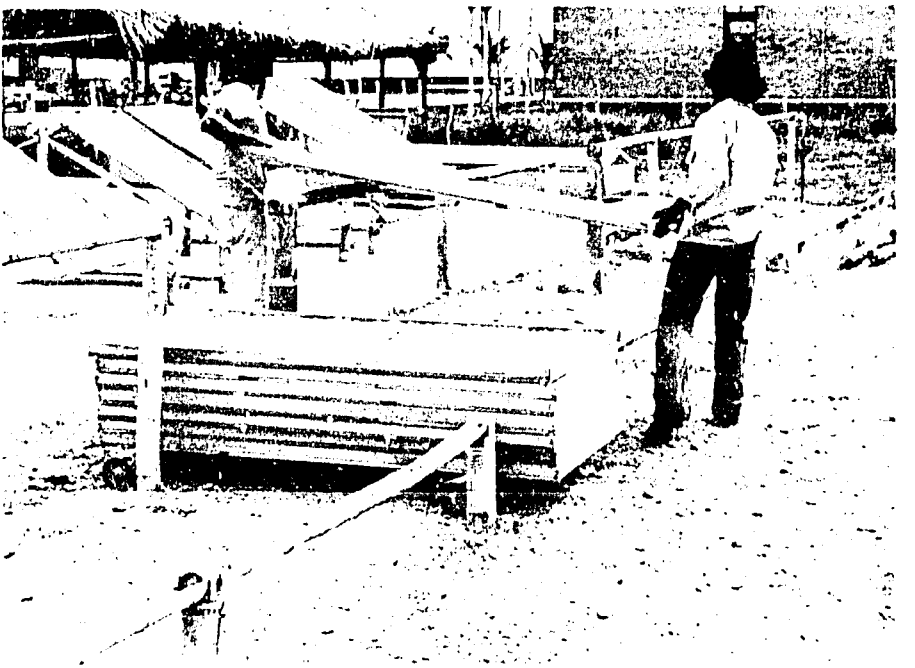

Figure 1. **Inclined mesh drying trays, which can be stacked at night or before rain.**

Table 1. **Variations in yield of cassava with different moisture contents (fresh weight basis).**

MC (%)	Yield of dry cassava at 10% MC/t of fresh cassava		Amount of fresh cassava (tons) required to produce 1 ton of dry cassava
	Theoretical (kg)	With 5% processing loss (kg)	
75	280	265	3.8
70	335	315	3.2
65	390	370	2.7
60	445	420	2.4
55	500	475	2.1

Table 2. **Range of specifications for cassava chips.**

Component	Percentage	Dependent on
Moisture	10-14	Efficient drying
Starch	70-82	Variety, age, ash and fiber content
Total ash	1.8 - 3.0	Clean roots
Crude fiber	2.1 - 5.0	No foreign (fibrous) matter

result in high ash content, whereas extraneous matter such as maize husks and cassava stalks will place the fiber content above the accepted limits.

The drying process

The operations involved in drying the cassava chips are shown in Figure 2. The roots usually carry a great deal of dirt (especially in areas with heavy soils and

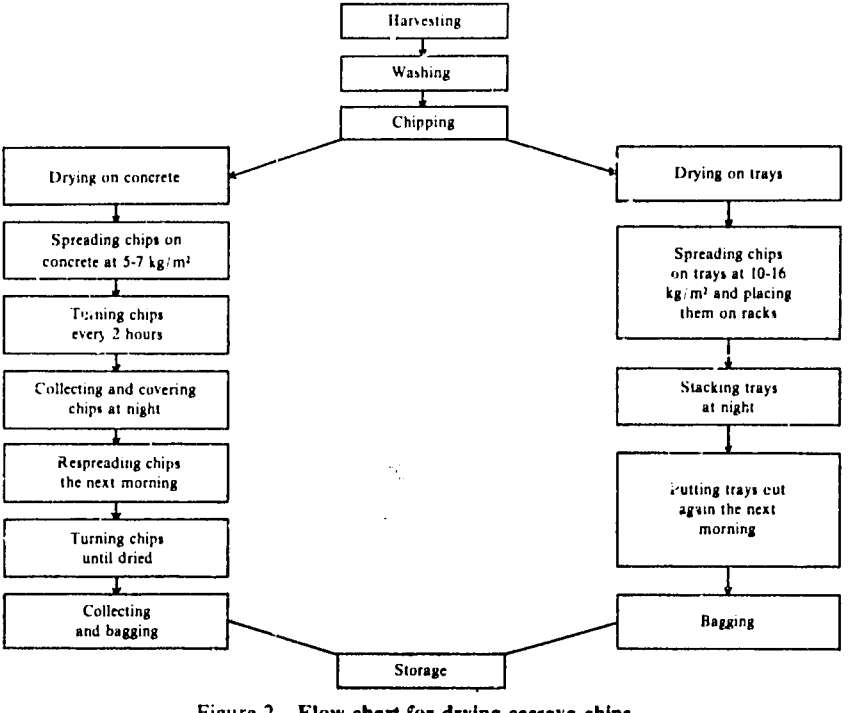

Figure 2. **Flow chart for drying cassava chips.**

during the rainy season) which, if not removed, is detrimental to the nutritional as well as the visual quality of the final product. Washing can be done manually in a large concrete tank (Fig. 3). If the chips are to be used for animal feedstuffs, neither the outer peel nor skin needs to be removed from the roots.

Drying is a time-consuming process; to reduce this time to a minimum, the roots should be cut into regular-sized chips (1 x 1 x 5 cm). An easily constructed Malaysian-developed machine produces chips of approximately the right size (Fig. 4). Instructions on its construction and operation are given in the Appendix. Once chipped, the cassava can be dried on concrete floors or on inclined mesh trays. Since there may be situations where concrete areas are already available, both methods are described. Provided that moisture content is reduced to 50% on the first day, the cassava will not deteriorate for three days after chipping. Nevertheless, the chips are always whitest when drying time is short.

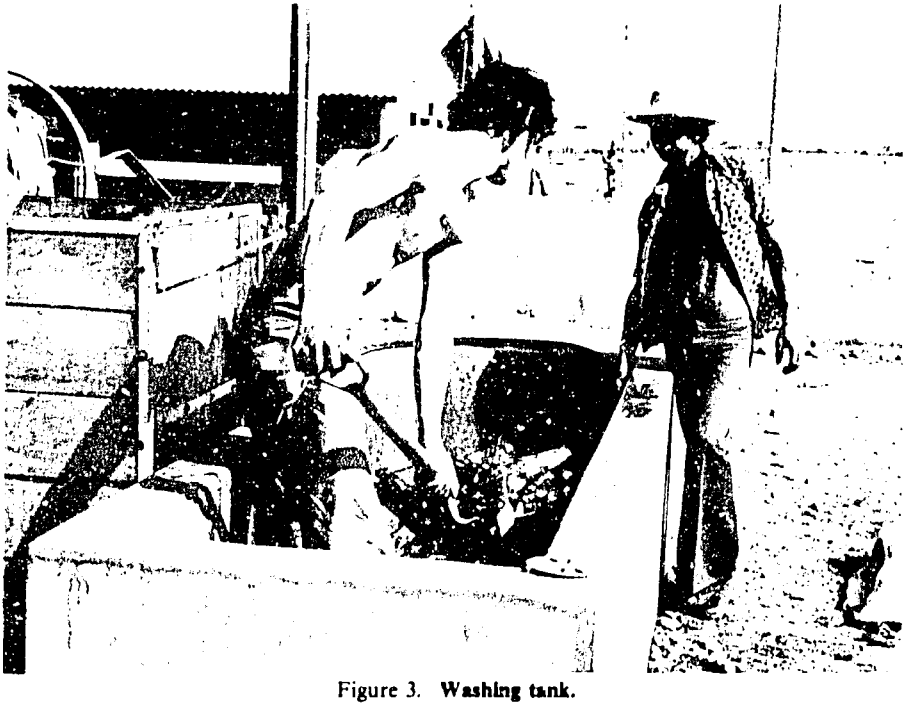

Figure 3. **Washing tank.**

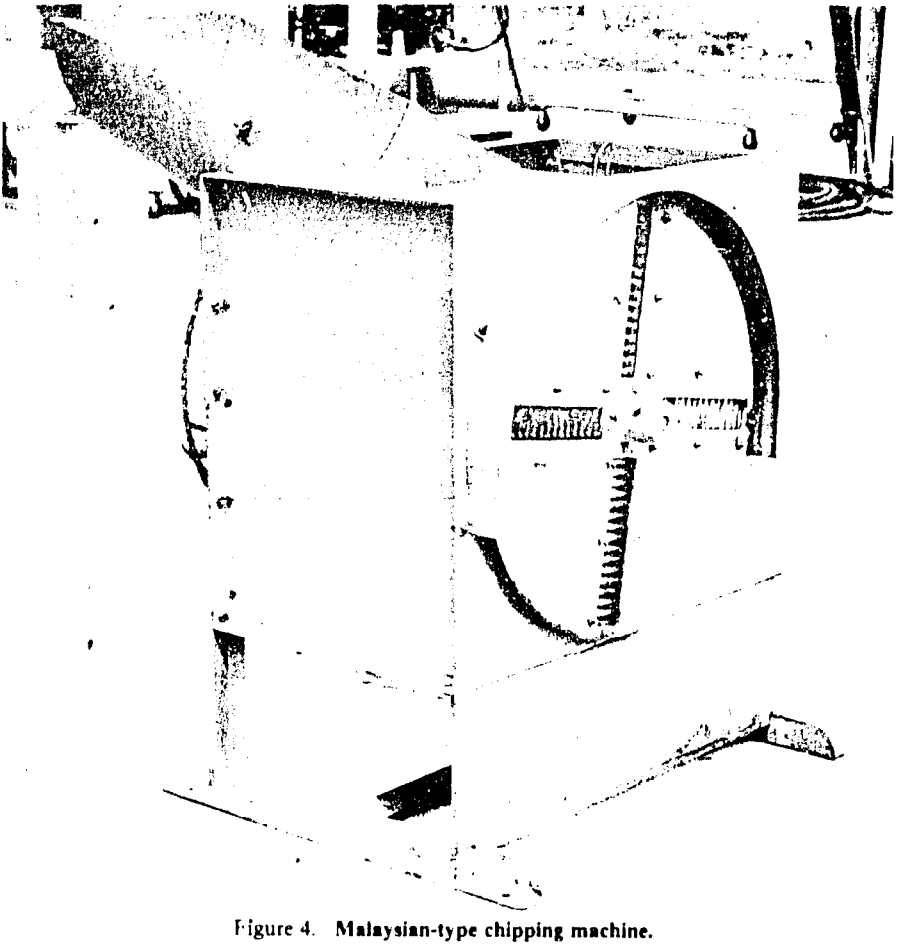

Figure 4. **Malaysian-type chipping machine.**

The chips are sufficiently dry for storage when they break easily and the cross section is chalky white throughout. The peel often takes longer to dry than the root itself. The brittle nature of the chips leads to the formation of a fine powder due to abrasion during handling; to reduce storage losses, closely woven sacks should be used. Although precautions need to be taken to prevent damage by rodents and insects, poisons and insecticides should be used with extreme care. If the chips have to undergo prolonged storage, they should be examined for

moisture absorption and the formation of mold; further drying may be necessary.

Drying on concrete

Many farms have concrete floors that can be used for drying cassava. The chips are spread evenly over the surface of the concrete, using a wooden rake (Fig. 5). To ensure uniform drying, especially in the initial stages when large quantities of moisture are lost, the chips should be turned at two-hour intervals. The special turning rake (Fig. 6) forms rows of chips, leaving strips of bare concrete between the rows to absorb solar radiation. Absorption will be more efficient if the concrete is painted black or if a black pigment is added to the final cement layer when a new floor is being laid. These areas should have as smooth a finish as possible; otherwise, the white cassava dust will fill the cracks in the rough surfaces, reducing the absorption of solar radiation.

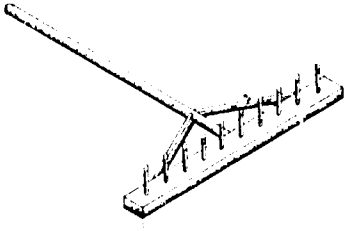

Figure 5. **Wooden rake for spreading chips on concrete.**

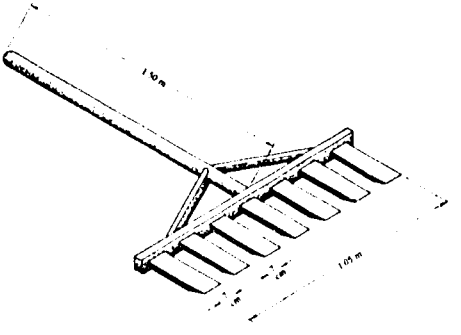

Figure 6. **Wooden rake for turning chips on concrete.**

A single layer of chips is equivalent to 5 to 7 kg/m² of fresh cassava per square meter. Thicker layers can be put down, but the effect of the black surface is reduced; at more than 10 kg/m², turning of the chips is difficult and must be done more frequently.

The chips must be swept up with wooden boards (Fig. 7) at night and before rain, and covered by sheets of plastic or canvas. Subsequent respreading is made easier when a number of small piles are formed rather than just one large one.

Concrete drying will give a high-quality product if the weather is good; but under poor conditions, the repeated sweeping up and extending of chips increases the formation of dust, which is lost if the floor is not carefully swept afterwards.

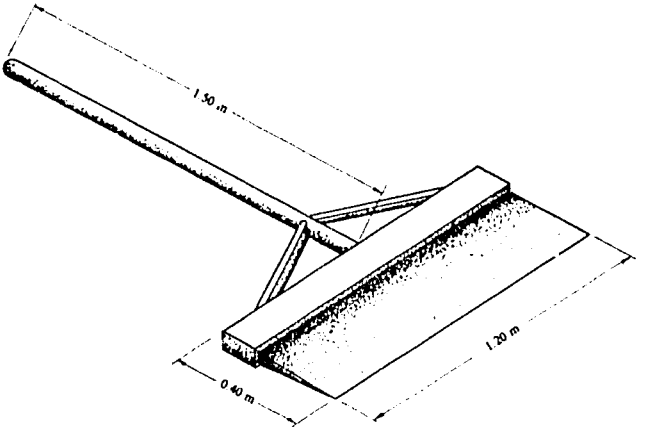

Figure 7. **Wooden shovel for collecting chips.**

Drying in trays

Inclined trays should be employed when large quantities of cassava are to be dried or where weather conditions are such that drying times must be shortened. The chips are spread on wood-framed trays with a base of 1-inch chicken wire and fine plastic mosquito netting (Fig. 8). The trays are then placed at an angle by supporting them on a bamboo frame of posts and rails, positioned so as to utilize to maximum advantage the direction of the prevailing wind (Fig. 9). The improved air circulation around the chips results in faster drying without the

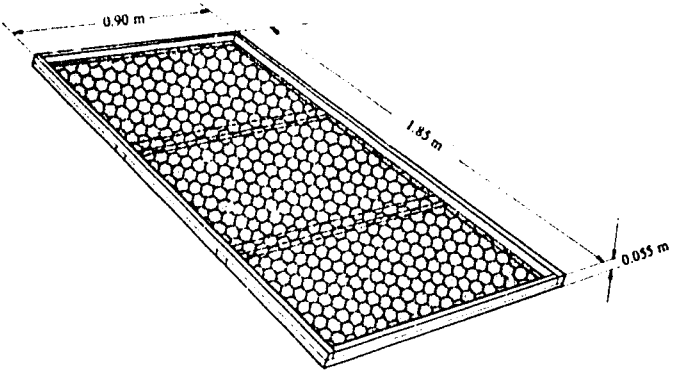

Figure 8. **Wood-framed tray with chicken wire and plastic mosquito netting base.**

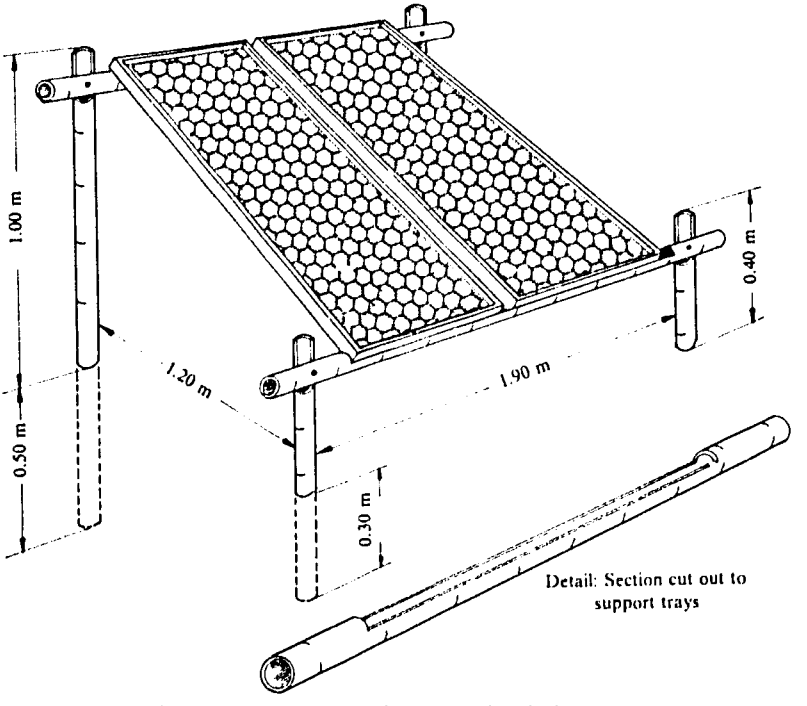

Figure 9. **Bamboo frame for supporting drying trays.**

need for turning the chips. The trays are positioned at the angle of repose of dry chips, which lies between 25 and 30°. The maximum angle should be employed; in places with high wind speeds, however, this may have to be reduced to prevent the chips from sliding down the trays once they are dry.

Tray dimensions should make best use of the materials available. For example, the trays in Figure 8 are 0.90 x 1.85 m, with a depth of 5.5 cm; they are sturdy and easy to handle. The width corresponds to the width of the rolls of chicken wire and mosquito netting, and the length minimizes wood wastage. The wooden crosspieces and chicken wire serve to support the mosquito netting. Wooden battens are then nailed around the bottom edge to secure the chicken wire firmly in place.

Any locally available materials can be used to construct these trays although material with a larger mesh than mosquito netting (35 holes/cm²) will result in product loss through the holes. When using mosquito netting, losses amounted to less than 5% of the dry cassava, whereas they rose to 15% when burlap (approx 3 holes/cm²) was used.

The quantity of chips spread on each tray depends on the wind speed; at higher speeds, thicker layers can be used without having to turn the chips. Table 3 gives typical loading rates for different wind speeds. The weight per tray need not be exact, but it is important to have the same quantity of chips on each one. This can be ensured by first filling a container that holds the amount required per tray since the use of shovels alone is usually inaccurate for loading the trays. To find the loading rates for trays of different dimensions, multiply the tray area by the appropriate figure in column 4 of Table 3 (tray loading in kg/m²). The thicker the layer, the more difficult it is to spread the chips evenly, and some respreading may be necessary.

Table 3 **Fresh cassava chip load for trays with dimensions of 0.90 x 1.85 m (area 1.67 m²).**

Wind speed		Tray loading	
Conditions	(m/s)	kg/tray	kg/m²
Calm, light breeze	up to 1	17	up to 10
Constant breeze	1-2	22	10-13
Steady wind	>2	27	13-16

Before rain, the trays are stacked horizontally, one on top of the other, with a canvas or sheet of corrugated iron covering the top tray (Fig. 1). The bottom tray is supported on two bamboo poles to keep it raised off the ground. The trays have to be stacked at night only if it is going to rain.

Drying time

The process of drying cassava can be divided into two stages:

1. In the initial stage the fresh chips lose moisture rapidly and air movement (wind) is more important than air temperature or humidity. Provided that there is sufficient wind speed, this stage can be completed under cloudy conditions or even at night. Therefore, in seasons when there is likely to be no rain, an appreciable quantity of moisture can be removed by leaving the trays on the drying racks overnight (Fig. 10). To make best use of this

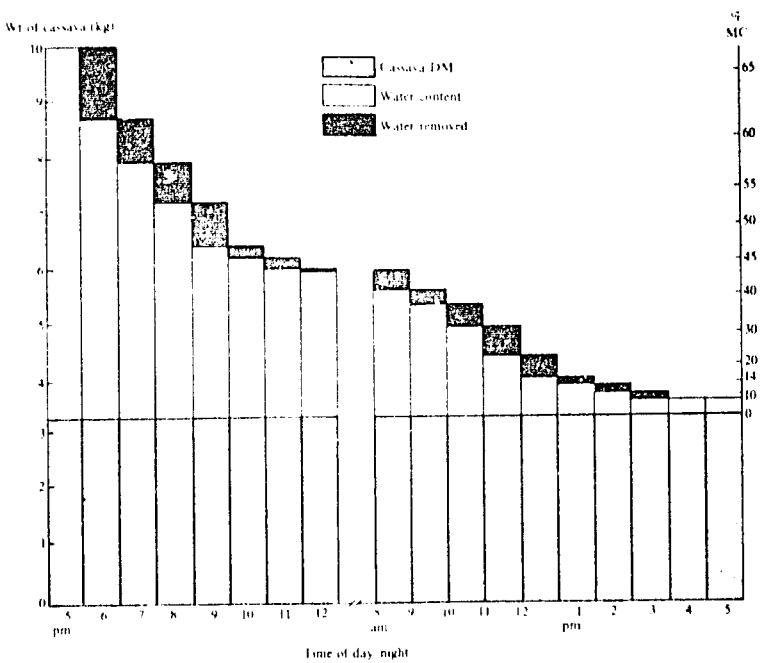

Figure 10. **Tray-drying curve; drying started at 5 pm and continued at night.**

period, the cassava should be chipped in the late afternoon. Table 4 illustrates the effect of wind speed on the amount of water removed. In contrast, fresh chips left on the concrete overnight lose only a small amount of moisture because they cannot be turned and wind speed at ground level is low.

2. In the final drying stage, when the moisture content of cassava has fallen to about 30%, the removal of water is very slow (Fig. 11), and the lower humidities of midday are required to complete the drying process. During this stage the relative humidity of the air must fall below 65% for the moisture content of the chips to reach a safe storage value. When the relative humidity remains over 65%, particularly during the rainy season, drying time will be prolonged until the weather improves. As long as the initial drying stage has been completed, the chips will not deteriorate for two or three days.

A number of trials were carried out at different locations in Colombia to determine drying times under varying climatic conditions (Table 5). It was found that:

1. Drying usually takes more than 10 hours (one day) but less than 20 hours (two days). Only under exceptional weather conditions will cassava dry in

Table 4. **Daylight drying hours for cassava chipped at different times of the day.**

	Av climatic conditions over trial period					Hours required to dry to 14% MC				
						Concrete loaded at 5 kg/m²	Inclined trays loaded at 10 kg/m²			
Location	Altitude (m)	Temp (°C)	RH (%)	Wind speed (m/s)	Solar radiation (cal/cm²/s)	08:00*	08:00*	11:00*	14:00*	17:00*
Sevilla	20	31	67	1.14	0.74	9	14	10	9	11
Espinal	430	29	60	0.66	0.66	11	13	10	9	6
Palmira	1000	26	68	1.26	0.61	14	12	9	6	8
Caicedonia	1100	26	69	0.90	0.72	14	14	12	11	15 (16%)**
El Darién	1450	23	72	1.73	0.70	13	13	12	12	11 (15%)**

* Time of starting trial

** Percentages indicate the MC at that time.

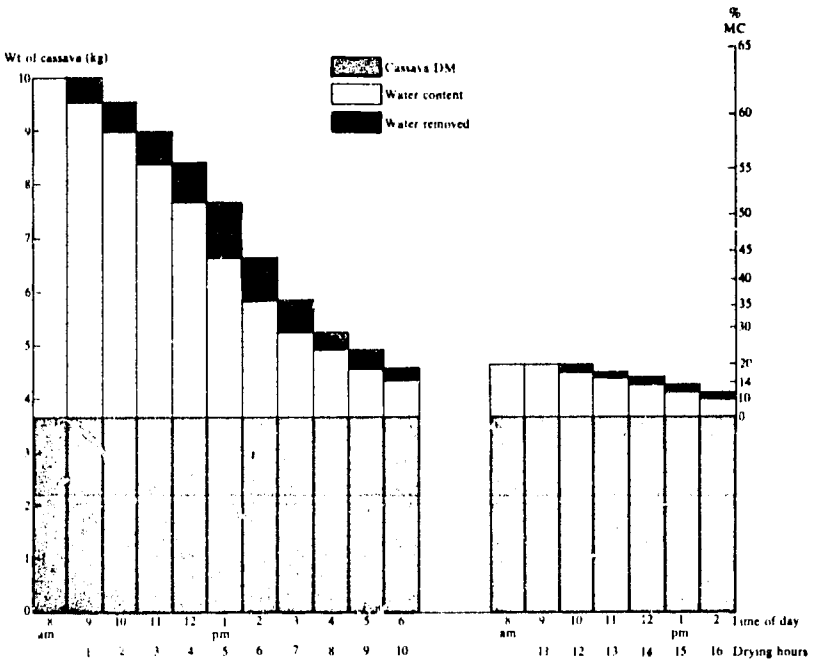

Figure 11. **Typical tray-drying curve; loss of moisture against time.**

Table 5. **Hours required between 08:00 and 18:00 for drying cassava to 14% MC at five different locations; average values for three trials.**

Location	Altitude (m)	Temp (°C)	RH (%)	Wind speed (m/s)	Solar radiation (cal/cm²/s)	Inclined trays loaded at 10 kg/m²	Black concrete loaded at 5 kg/m²
Sevilla	20	31	68	1.0	0.71	13	13
Espinal	430	30	64	0.9	0.65	12	10
Palmira	1000	26	66	1.2	0.61	13	15
Caicedonia	1100	26	67	0.8	0.58	19	17
El Darién	1450	24	70	1.9	0.73	12	11

less than one day. On the other hand, where wind speeds and solar radiation are low, drying may extend into a third day, as happened occasionally at location 2.

2. Approximately the same number of hours is required to dry twice the quantity of chips per square meter in trays as compared with concrete.

3. In areas with high humidities (locations 1, 2 and 5), cassava dries more quickly if there is high wind speed.

Chipping and drying costs

The cassava chipper can be constructed by small local shops. In 1977 the cost of having one machine made in Colombia was US$220; with a 3-hp gasoline engine, the total cost was US$400.

Table 6. **Comparison of material costs (US dollars) for 100 m² drying surface (concrete floor or trays).**

Item (unit)	Unit costs ($)	Units required	Cost ($)
Concrete floor (10 m²)			
Cement (50-kg sack)	1.50	40	60.00
Sand (m³)	3.00	5	15.00
Gravel (m³)	4.10	10	41.00
Black pigment (kg)	1.40	20	28.00
Wood boards (2.80 x 0.24 x 0.025 m)	1.10	30	33.00
Total			177.00
5% loss			9.00
Total cost			186.00
Cost/m² of drying surface			1.86
Cost/kg of fresh cassava loaded at 5 kg/m²			0.37
Trays (60 trays measuring 1.85 x 0.90 x 0.055 m and bamboo supports)			
Wood (2.80 x 0.24 x 0.025 m)	2.70	42	113.40
1" chicken wire (0.90 x 36 m)	18.90	3.2	60.50
Plastic mosquito netting (0.90 x 30 m roll)	11.50	3.8	43.70
Nails (kg)	0.82	10	8.20
Bamboo (m)	0.14	255	35.70
Total			261.50
5% loss			13.10
Total cost			274.60
Cost/m² of drying surface			2.75
Cost/kg of fresh cassava loaded at 10 kg/m²			0.28

The costs of the materials required for laying concrete and making the trays are shown in Table 6. The prices of cement, sand, gravel and wood include transportation to CIAT, which is approximately 20 km from the point of origin of the materials; in isolated places, therefore, these prices would be higher. The cost of trays per square meter of drying surface is greater than that of concrete drying floors. Nevertheless, when taking into account the higher loading rate for trays, a 35% savings in capital outlay could be made by using the tray drying system. Both tray life and maintenance costs depend on the care with which the trays are made and handled, whereas a concrete floor requires little maintenance and should last indefinitely.

The most time-consuming operations in terms of manpower are washing, chipping and spreading the chips; careful positioning of the washing tank, chipper and drying area will help reduce this time. The handling of the chips after spreading is made considerably easier by the use of trays since neither turning nor respreading is necessary. In terms of labor required for the whole process, an economy of 20% is made with the trays (Table 7).

Table 7. **Labor requirements for chipping and drying one ton of cassava with two operators.**

Activity	Labor (man-hours)	
	Concrete drying	Tray drying
Weighing and washing roots	3	3
Chipping	2	2
Total	5	5
Spreading over concrete/trays	2	2
Turning, 4 times/day	1.5	-
Collecting and covering at night	1	1
Respreading in the morning	1.5	1
Turning	1.5	-
Collecting and bagging	2	2
Total	9.5	6
Total labor	14.5	11

Bibliography

1. ROA, G. 1974. Natural drying of cassava. Ph.D. Thesis. Dept. of Agricultural Engineering, Michigan State University, East Lansing, 234p.

2. THANH, N.C.; PESCOD, M.B. and MUTTAMARA, S. 1976. Final report on technological improvement of tapioca chips and pellets produced in Thailand. Asian Institute of Technology, Bangkok, Thailand Research report no. 57. 41p.

Appendix

Construction and operation of the cassava chipper

The frame, rotary disk drive shaft and loading hopper are manufactured as shown in Figure A1. The rotary disk is mounted on the drive shaft, which is fitted into two bearings (purchased as standard items) fixed to the frame. The hopper is then fitted into position.

To obtain the required disk speed of 500 rpm, a 3-bhp gasoline or electric motor can be used with a belt-drive mechanism; the power take-off of a tractor can also be used, provided that the correct output speed can be obtained.

Before operating the chipper, the drive mechanism and the rotary disk must be fitted with guards to protect the operators (Figs. A2 and A3). After the machine has been assembled and secured firmly to the floor, it should be run light to test the drive mechanism and the balance of the rotary disk. After completing the trial runs, the cutter blades can be fitted to the rotary disk and processing can begin. The chipper has a throughput of 1 t/ha when operated by two men and fed manually.

Manufacture of the cutter blades

Each of the four cutter blades (Fig. A4) is made of 4 pieces of steel sheets welded together. The die for making the blades (Fig. A5) can be constructed as detailed in Fig. A6; the method of making the individual blade parts is shown in Figure A7.

The positioning of the holes for securing the cutter blades to the rotary disk is shown in Figure A8; allowance is made for lateral movement so that one blade can be offset from the next (Fig. A9) to ensure that the chips are regular in size.

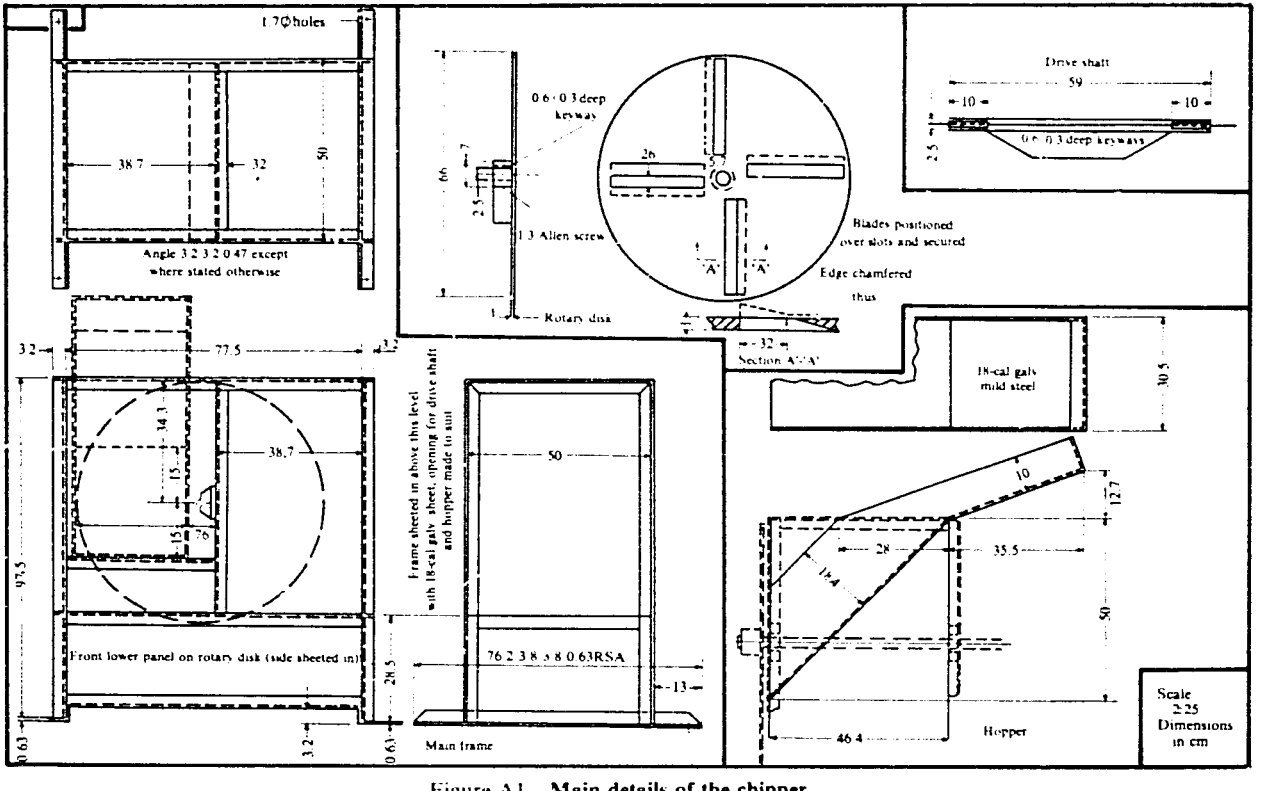

Figure A1. **Main details of the chipper.**

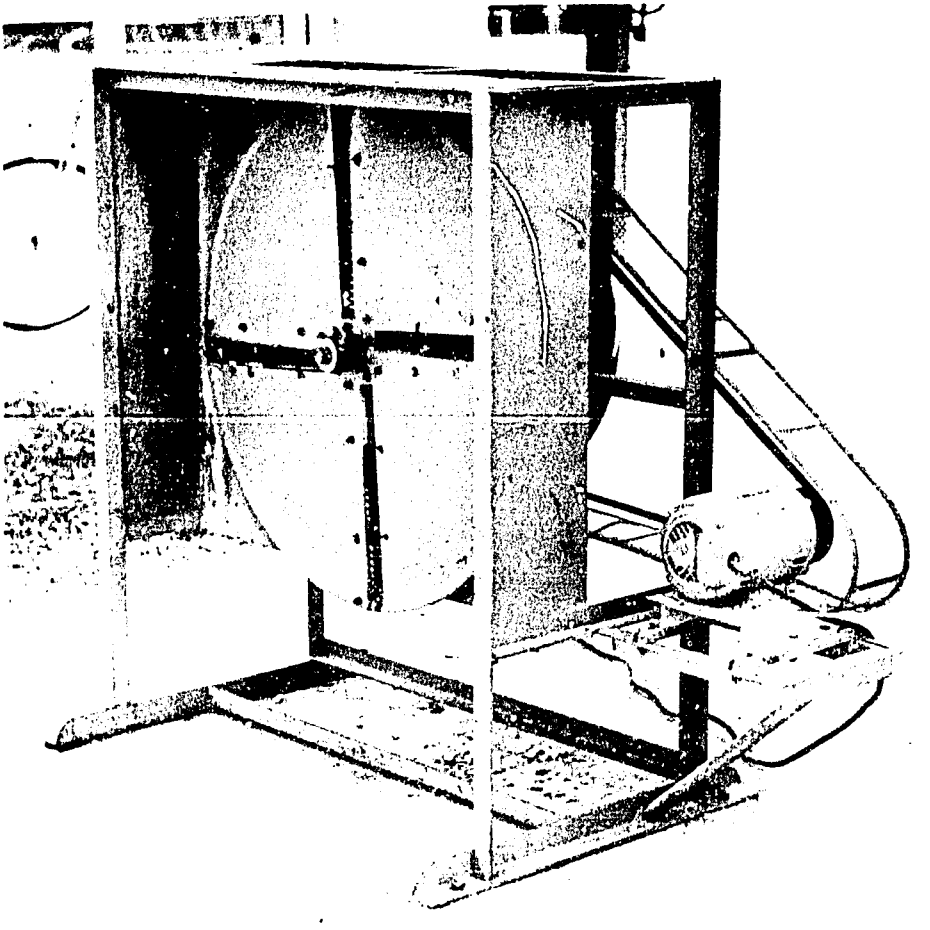

Figure A2. Side view of chipper.

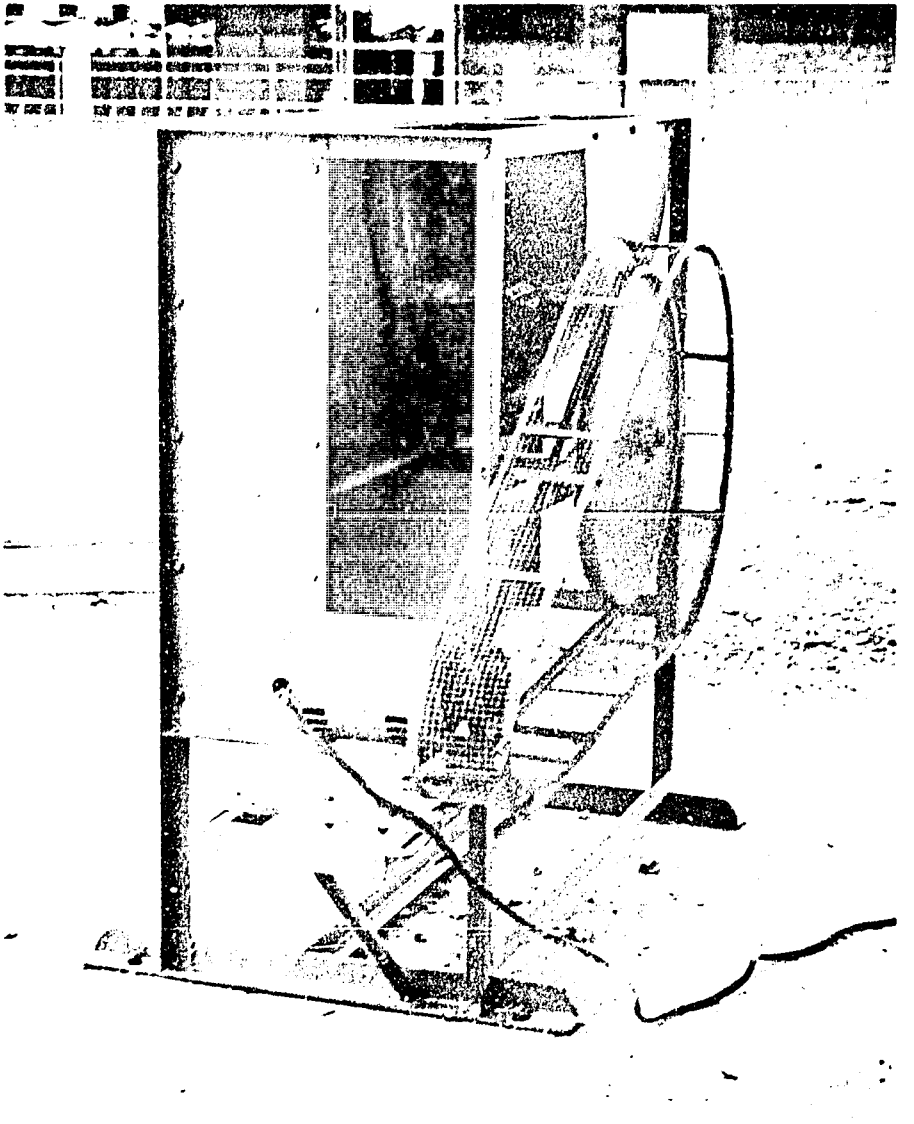

Figure A3. **Back view of chipper.**

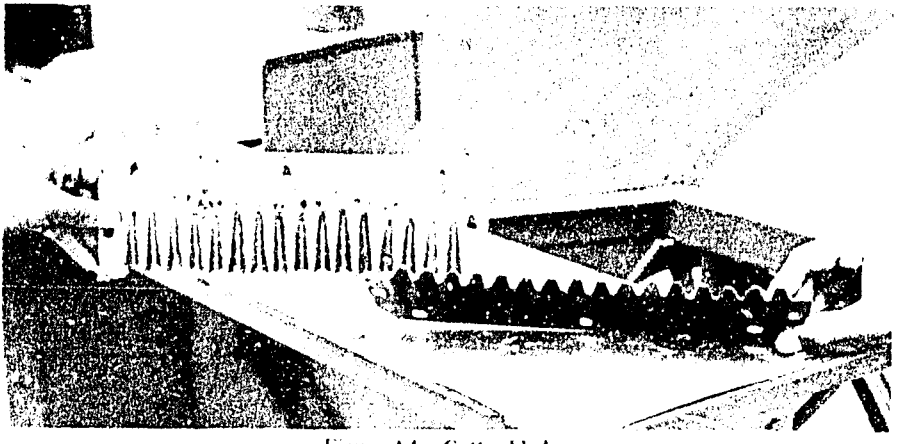

Figure A4. **Cutter blades.**

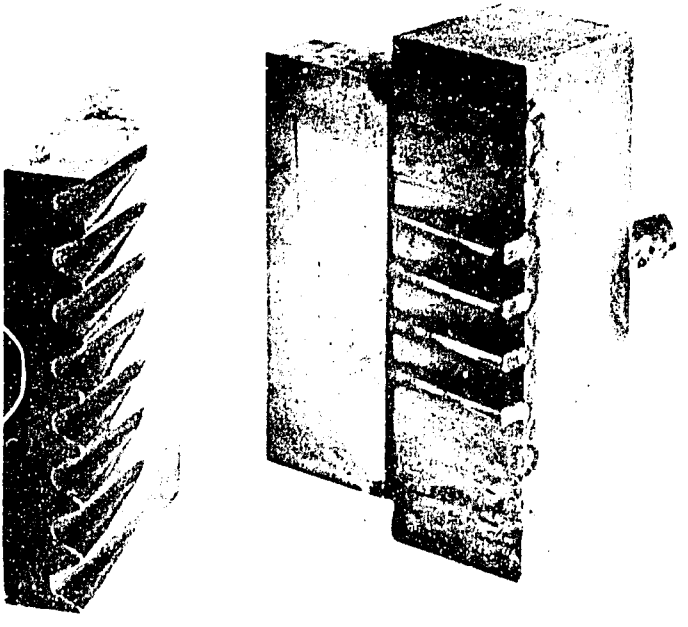

Figure A5. **Die used to make the blades.**

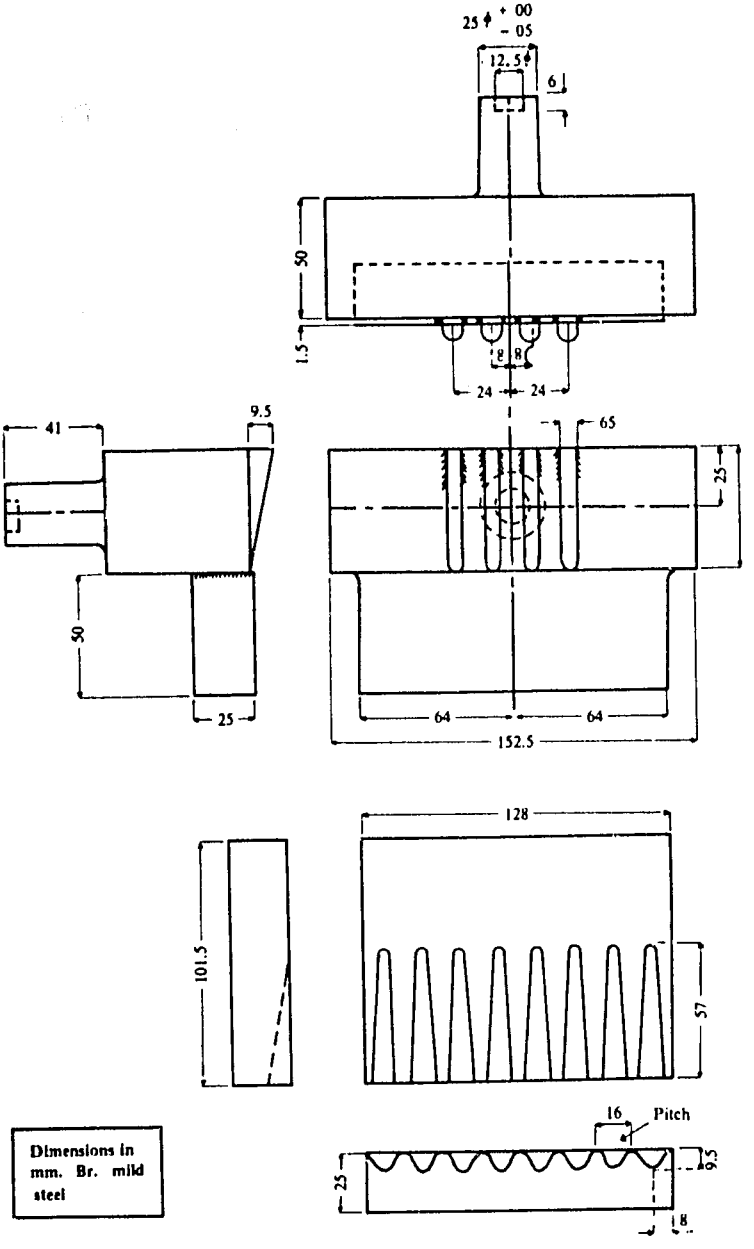

Figure A6. **Dies and blades.**

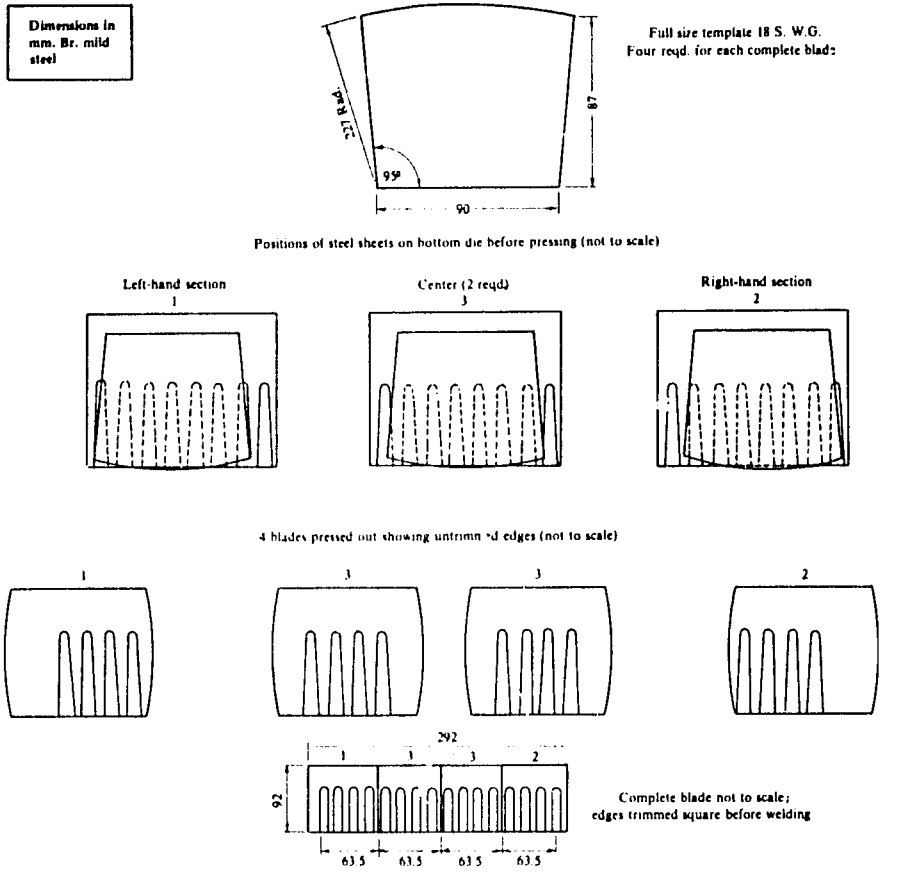

Figure A7. Details for making the different blade parts.

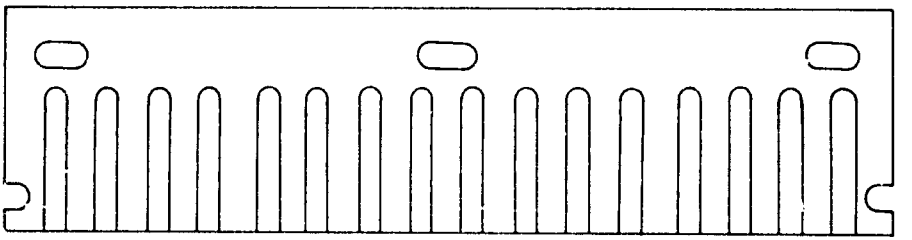

Figure A8. **Position of holes for securing the cutter blades to the rotary disk to allow lateral movement.**

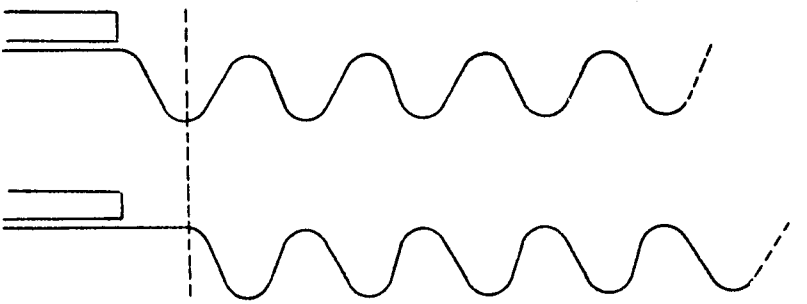

Figure A9. **The offsetting of one blade from the next to give regular-sized chips.**

CREDITS

Programming :	Orfa Vásquez Orejuela
Typesetting :	Janeth Loaiza Tamayo
	Yolanda de González
Graphics :	Didier González Correa
Layout :	Oscar Idárraga Rubio
Cover photo :	Ricaurte Gil