JA
631.8
W 324

PN-AAH-228

IRRI RESEARCH PAPER SERIES
Number 37 August 1979

DENITRIFICATION LOSS OF FERTILIZER NITROGEN IN PADDY SOILS -- ITS RECOGNITION AND IMPACT

I. WATANABE and S. MITSUI

The International Rice Research Institute
P.O. Box 933, Manila, Philippines

DENITRIFICATION LOSS OF FERTILIZER NITROGEN IN PADDY SOILS - ITS RECOGNITION AND IMPACT[1]

ABSTRACT

After a large nitrogen loss by denitrification in paddy soils was first recognized (1941), many field studies to minimize this loss have been conducted in Japan and in all rice-growing countries. The first part of this paper deals with a historical review in Japan of: a) the discovery of loss of surface-applied nitrogen by denitrification in flooded rice soils, b) recommendation of deep placement of fertilizer as a measure to minimize loss, c) innovation of manual and mechanical fertilizer applicators or forms of fertilizers to make deep placement practical, and d) responses of farmers to the recommendation.

The second part describes the international and national efforts in other rice-growing countries to minimize nitrogen loss by deep placement. Ammonia volatilization loss in association with high pH of floodwater due to algal photosynthesis is being studied in the tropics. The implications of the Japanese experience in increasing nitrogen fertilizer efficiency in tropical rice culture are discussed.

[1]By I. Watanabe, soil microbiologist, The International Rice Research Institute, Los Baños, Laguna, Philippines, and S. Mitsui, Professor emeritus, The University of Tokyo, Bunkyo-ku, Tokyo, Japan. This paper is composed mainly of the summarized translation of Mitsui's book (1978) and presentation at the SEFMIA Congress in 1977 (Mitsui 1977). Submitted to the IRRI Research Paper Series Committee April 1979.

DENITRIFICATION LOSS OF FERTILIZER NITROGEN IN PADDY SOILS - ITS RECOGNITION AND IMPACT

Fertilizer experiments with wetland rice at the prefectural agricultural experiment stations in Japan many years ago (about 1930) showed that the absorption efficiency of fertilizer nitrogen was as low as 30-40% with basal application and 50-60% with topdressing. The efficiency of nitrogen basally applied was higher for upland cereals than for wetland rice. Shioiri, Mitsui, and a group of soil scientists at the Central Agricultural Experiment Station at Nishigahara, Tokyo (currently National Institute of Agricultural Science), sought the reason for low nitrogen fertilizer efficiency.

The immobilization of applied nitrogen by aquatic weeds and algae, which grew abundantly in the floodwater after fertilization, was suspected, but the process could not account for a major part of the nitrogen loss in the paddy (Shioiri and Mitsui 1935a). Incidentally, Mitsui's experience in laboratory incubation experiments on mineralization of nitrogen in submerged soil hinted at the possible role of denitrification loss. After prolonged incubation, the ammonium content mineralized in undisturbed soil was remarkably higher than that in soil that was disturbed to draw samples repeatedly from the same batch. After repeated experiments to explain the apparent anomaly, Mitsui reached the hypothesis that the increase in oxygen supply to the flooded soil as brought about by stirring and homogenizing of the soil during repeated samplings may be associated with the lower ammonium content in the disturbed soil. The results of experiments to confirm this hypothesis are shown in Table 1 (Shioiri and Mitsui 1935b).

Alluvial paddy soil was incubated with 10 mg N $(NH_4)_2SO_4$/100 g of soil at 26°C. The ammonium decreased when soil was stirred every day and decreased to the minimum in soil stirred every 3 or 6 days. The unstirred soil under nitrogen gas accumulated more ammonium than the undisturbed control under ambient air. In undisturbed soil, a thin yellowish-brown layer was formed on the soil surface. The layer was not found in the soil disturbed every day, but it appeared more clearly as the number of stirring decreased. Under nitrogen gas the yellowish-brown layer never appeared. Although no definite mechanism could be established at the time, the report by Hutchinson and Richard (1910), Rothamsted Experiment Station, England (reference unknown), on nitrogen loss from a compost heap as a result of *alternate oxidation reduction* seemed to be the most relevant.

The key to the solution of this problem was thus found and Shioiri conducted further experiments based on the concept that the submerged soil was heterogeneous and differentiated into a surface *oxidized layer* and a *reduced layer* below. The uniqueness of nitrogen transformation in the waterlogged soil was thus recognized. The experiments (Shioiri and Aomine 1937, 1938, 1939, 1940) along this line led to the recommendation of deep placement for minimizing nitrogen fertilizer loss in wetland rice.

Research by limnologists Pearsall and Mortimer (1939), who indicated the differentiation into oxidized and reduced layers in lake sediments, influenced the studies by Shioiri.

Shioiri's review of denitrification was published in 1941. The direct evidence of nitrogen gas loss is shown in Table 2. The experiment showed a sizable decrease in total nitrogen in soil submerged at 1 cm depth, and little decrease at 4 cm (Shioiri 1941).

ESTABLISHMENT OF DEEP PLACEMENT OF NITROGEN FERTILIZER AS AN IMPROVED METHOD OF FERTILIZER APPLICATION

In his review paper, Shioiri (1941) also summarized the results of experiments to improve fertilizer efficiency by deep placement. In early experiment in 0.5-m^2 lysimeters (Table 3), the soil was kept dry during fallow (winter). The results clearly showed that deep placement led to maximum efficiency of nitrogen uptake by the rice plant. Later more field experiments under well-controlled conditions were conducted at Konosu (currently Central Agriculture Experimental Station), Aomori, Kagoshima, Yamaguchi, Kumamoto, Tottori, and Yamanashi prefectural agricultural experiment stations. Using their results, Shioiri recommended that deep placement be done as follows:

- Broadcast nitrogen after the first plowing, incorporate it into the furrow slice by crushing soil clods or plowing it under (Shioiri 1942a).
- Then introduce irrigation water as soon as possible to minimize possible nitrogen loss by nitrification followed by leaching.

Data at the Tottori (southwestern district) Prefectural Agricultural Experiment Station showed that delaying irrigation for 2 weeks or longer resulted in nitrogen loss and little beneficial effect from the plowing-under treatment of nitrogen over surface application. However, the recommended practices such as soil crushing or plowing-under or immediate irrigation were not feasible to most farmers, despite enthusiastic extension activities to promote improved fertilizer application. The farmers faced many constraints to the adoption of the new technique. The constraints are described below.

Field experiments conducted in Japan to minimize denitrification

The summary of field experiments on the effect of deep

Table 1. Effect of stirring of waterlogged soil on the accumulation of ammonia.

	Soil stirred every						No stirring	
	1 day	3 days	6 days	12 days	24 days	48 days	Under air	Under N_2 gas
NH_4-N mg/100 g dry soil after 111 days incubation	5.79	1.47	1.50	2.13	3.16	5.04	6.03	14.60

Table 2. Denitrification in flooded paddy soils (Shioiri 1942b).

Fertilizer added	Depth of soil (cm)	Amount of N (mg/100 g soil)				N_2 gas formed (mg/100 g soil)
		0 day		24 days		
		NH_4-N	NO_3-N[a]	NH_4-N	NO_3-N[a]	
None	1	0.32	0	0.05	trace	11.0
Ammonium sulfate	1	10.32	0	4.66	trace	15.5

[a]Content in surface water.

Table 3. Effect of ammonium sulfate on nitrogen absorption by rice plants growing in 0.5-m^2 lysimeter plots (Shioiri 1941).

Method of application	Nitrogen (%) of applied amount taken up by rice plant
Surface broadcast on floodwater	51
Broadcast on floodwater followed by puddling	63
Broadcast and mixed with soil after drainage, followed by flooding	79
Applied to 3-6 cm depth	89

placement and topdressing of ammonium sulfate at 20 sites from 1942 to 1952 was first presented to the International Rice Commission conference sponsored by FAO in Bogor in 1951. The overall average increase of brown rice yield over the customary basal application was 10% (range of 5-25%). At the same time the effect of topdressing at panicle initiation was reported. Urea as fertilizer was first produced in Japan in 1948. A rapid increase in its production followed thereafter.

To determine the best technique for urea application to wetland rice, a network of 17 prefectural agricultural experiment stations conducted fertilizer experiments with common treatments from 1956 to 1958 (Mitsui 1968). The results were:

- Fertilizer effect was highest when the field was irrigated immediately after deep placement. Loss of urea by leaching was less than the loss due to nitrification, which occurs before irrigation.
- In cooler regions (Hokkaido, Tohoku, and Hokuritu districts) where temperature is cold at the time of application, irrigation following deep placement can be delayed for 7 or 10 days.
- In warmer regions, irrigation should be within 3 or 4 days after deep placement. Delayed irrigation causes the nitrogen loss due to nitrification, which occurs before irrigation.
- Application before harrowing is recommended if irrigation is applied before the first plowing by a tiller.
- In fields with high percolation rate, wet application before puddling is recommended.
- In the continuously flooded field, timing of irrigation after urea application was not a critical factor. Light harrowing after urea broadcast is recommended.

Deep placement of ammonium chloride was also tested in agricultural experiment stations from 1958 to 1961.

Deep placement of ammonium chloride increased rice yields more than did surface application. Fertilizer efficiency with 3-day intervals between deep placement and irrigation could be similar to efficiency with immediate irrigation.

Before deep placement of ammoniacal fertilizer was recommended, the practice was to broadcast calcium cyanamide before the first plowing. Keeping soil unflooded for 2-week periods or longer after calcium cyanamide application was recommended.

Presumably, nitrification was inhibited by dicyandiamide, which is formed as a by-product of cyanamide decomposition. Acetylene has recently been found as a strong inhibitor of nitrification (Walter et al 1979). Calcium carbide, from which acetylene is formed, is an impurity of commercial calcium cyanamide. Thus, acetylene may be an inhibitor of nitrification accompanied by calcium cyanamide application.

Recommendation and extension for deep placement and its modification

Even before scientists published the theory of deep placement, a farmer at Aomori Prefecture -- Kenichi Sato -- had recommended deep placement (in the 1930s). In 1942, deep placement was formally recommended by Shioiri (1942a). Because of fertilizer shortage at that time, deep placement and topdressing at panicle initiation were enthusiastically recommended as means for increasing fertilizer efficiency.

Mitsui gave lectures in 1952 and 1955 at the International Training Center on Fertilizer and Soil Fertility for Rice sponsored by FAO and a textbook, based mainly on the lectures, was published (Mitsui 1954). But despite enthusiastic extension activities, the deep placement technique was not acceptable to common farmers. More practical techniques of deep placement were needed.

Deep placement of urea after transplanting

Kunitake (1962) at Niigata Prefecture (middle northern district) noted the practical difficulty in deep placement of nitrogen. It was necessary to coordinate the sequence of fertilizer broadcasting, plowing, irrigation, and puddling. But the coordination was difficult not only for farmers but also for the agricultural experimental stations.

Niigata Agricultural Experiment Station invented a simple hand-driven device to deeply place urea between hills about 1 week after transplanting. The device was adopted by farmers on an area of 6,000 ha in 1961, but the method was later abandoned chiefly because of labor shortage and fluctuation of fertilizer application rate.

Deep placement of nitrogen at panicle formation stage

Sato at Aomori (northern Honshu) felt that deep placement of nitrogen as basal dressing often led to too vigorous vegetative growth and an unexpected poor grain yield. He introduced the combination of deep placement with topdressing of nitrogen at the panicle initiation stage. Since 1958 there has been energetic experimentation and extension of that improved method. The area using the technique at Aomori Prefecture reached the maximum (61% to total paddy area) in 1970.

The ultimate aim of the method was stressed:

- to provide short stems and leaves combined with long panicles,
- to release nitrogen gradually at a later growth stage, and
- to minimize loss by denitrification.

In experiments with ^{15}N-labeled peat-ball fertilizer, deep placement allowed 86% nitrogen uptake by the rice plant. Topdressing by surface broadcast gave only 50% uptake.

Fertilizers, such as peat balls or granular or liquid compounds, are placed 10-12 cm deep in soil between hills 35-30 days before heading. Early deep placement was by hand or by hand-driven instruments but in the last 15 years simple engine-driven machine have become available. With an engine-driven machine, one person can fertilize 1 ha/day. Deep placement of fertilizer at the panicle formation stage has spread to the middle district of Japan, such as Chiba and Ibaragi prefectures.

Mechanized deep placement of nitrogen

Mechanized deep placement of liquid fertilizer was introduced to overcome difficulties of deep placement of solids met by farmers. After World War II, fertilizer sources other than ammonium sulfate were exploited for two reasons. Industrially, nonsulfur fertilizer was needed because of the shortage of sulfuric acid. Agronomically, it was needed to avoid sulfide toxicity in degraded paddy soils. The situation led to Mitsui's direct use of liquid ammonia.

Mechanized deep placement of liquid ammonia (1946-49). In cooperation with an agricultural engineer at the Central Agricultural Experiment Station (Konosu), Mitsui devised an injector driven by cattle to put 20% ammonia solution into the paddy soil. In principle, the device was successful in driving nitrogen to the plow layer, but many problems remained.

Mechanized deep placement of liquid fertilizers (1953-55). In cooperation with scientists at the University of Tokyo, Central Agricultural Experiment Station, and Tokyo Agricultural Technical University, three versions of a liquid fertilizer animal-driven applicator were made. Applied research was conducted for 3 years to see the effect on rice yield, nitrogen fertilizer efficiency, and nitrogen distribution in the soil. In the first year of trial, 20% ammonia solution was used; NPK solution fertilizer was used in the third year. In the third year, plow-under treatment of ammonium sulfate, ammonia solution, and NPK solution applied by machine resulted in 33, 44, and 46% nitrogen absorption efficiency by the plant.

Fertilizer applicator attached to engine-driven cultivator (1962-64). In the early 1960s the engine-driven tiller started replacing cattle-drawn machines. In cooperation with the Ministry of Agriculture, four agricultural machinery companies, two fertilizer companies, and eight prefectural experiment stations, Mitsui and Tezuka undertook the project of mechanized fertilizer placement.

Various versions of a simple attachment to hand tractors were tried. Direct sowing and the use of nitrification inhibitors were components of the tests in some areas. Mostly solution NPK fertilizers were used. Unfortunately, the trials had problems: labor for putting fertilizer in a fertilizer tank and rust on the machine during the off-season.

Band applicator of paste fertilizers, attached to an engine-driven transplanter (1973-76). Engine-driven transplanting machines have been widely accepted by Japanese farmers. Within a few years, their use has extended to 60-80% of the total paddy area in Japan. The accumulated knowledge of deep placement by machine and the new situation led to the invention of equipment for simultaneous mechanical band placement (root-zone application) of chemical fertilizer and mechanical transplanting (Fig. 1). During transplanting, paste-like fertilizer is pushed through nozzles and placed a few centimeters from the planted hill at 5-10 cm depth. A corrosion-proof pump between the fertilizer tank and nozzle has an output rate of 30-60 kg N/ha which is adjusted by changing a sprocket.

The paste-like fertilizer is made by mixing N-P-K (urea, ammophos, and potassium chloride) fertilizer with a quantity of the viscous residue of industrial alcoholic fermentation, clay, and ligno-sulfate powders. This method of application is aimed not only at reducing nitrogen loss by deep placement, but also at increasing the nutritive value of fertilizer by root-zone application. Experiments during 4 years at various prefectural experiment stations proved a 20-30% saving of chemical fertilizer as basic dressing was possible. This method was more effective in the northeastern (cooler) than in the warmer districts in Japan. The use of ^{15}N allowed root-zone application of the paste fertilizer to give 60% fertilizer absorption efficiency (Table 4). The efficiency of phosphorus was increased as well.

Farmers' response to deep placement technique

In 1942, Shioiri recommended deep placement of nitrogen fertilizer by incorporation of fertilizer in the furrow slice followed by immediate irrigation or irrigation after a short interval. The practice was, however, not acceptable to farmers at that time. Mitsui conducted a series of meetings with farmers at five prefectures (Aomori, Nagano, Niigata, Mie, and Saga) to discuss their reaction to deep placement. The following summarizes the discussions.

Before mechanized cultivation. Before 1955, cultivation (plowing, harrowing, and puddling) was done with cattle. Ill-drained paddy fields were still widely distributed. Irrigation systems in some places could not correctly predict the timing of irrigation.

Because of a labor shortage (farmers were reluctant to plow the soil only to incorporate fertilizers), unpredictable time of irrigation, water shortage, and high cost of fertilizer, many farmers showed reluctance in adopting deep placement despite their awareness of its benefits. Those who voluntarily adopted the technique found it inefficient because the intervals between fertilizer application and irrigation were sometimes too long. In some areas, the custom of applying fertilizer before plowing or in furrow slices unintentionally resulted in partial deep placement.

After mechanization. Mechanization of cultivation shortened the intervals between the first plowing and transplanting. Newly developed irrigation systems supplied water quickly for land preparation. In some areas, farmers could broadcast fertilizer before plowing and flooding. In some areas, however, water was supplied too quickly to allow time for fertilizer application before flooding.

Because of labor shortage, some farmers were reluctant to do additional tillage to incorporate fertilizers. Some farmers said that deep placement of fertilizer by machine might dilute the fertilizer in the furrow slice and, consequently, retard the early growth of rice. Since the introduction of mechanized transplanting, surface broadcasting has been recommended in some areas to get quick tillering of young rice seedlings transplanted by machines.

From this review, it is obvious that farming operations for land preparation were seldom modified merely to improve fertilizer placement. It was, therefore, necessary to develop machines for fertilizer application or special forms of fertilizers.

IMPLICATIONS OF JAPANESE EXPERIENCE IN TROPICAL RICE CULTURE

Experiments in the tropics

In India, Ramiah et al (1951) reported preliminary results on deep placement of nitrogen fertilizer for wetland rice. They cited the results of earlier trials in Japan. One method of deep placement they tried was dry application in the lower layers. It was similar to that recommended in Japan, i.e., application in dry soil 5-7.5 cm below the surface a few days before irrigation. In large rice areas of northeastern India -- Assam, Bihar, Bengal, and Orissa -- rice was sown in dry soil at or just before the onset of the monsoon. Indian researchers found no difficulty in applying ammonium sulfate in the dry soil inside plow furrows. They considered that more efficient than later application when the monsoon was in full swing. Where the dry land was not plowed but was puddled after water was first

Table 4. Effect of root-zone application of paste fertilizer on nitrogen uptake by rice plants. Yamagata Agricultural Experiment Station, 1974.

Treatment	Applied N (kg/ha)[a]		N uptake (kg/ha)			Utilization rate (%) of N		
	Basal	Topdressed	20 Jun	9 Jul	Harvest 26 Sep	20 Jun	9 Jul	26 Sep
No nitrogen	0	0	9.2	25.6	82.3	-	-	-
Customary	50	30	14.9	32.6	98.8	11	14	21
Paste, root zone -1	50	30	27.2	48.8	129.4	36	46	59

[a]Applied equally on 18 July and 5 August.

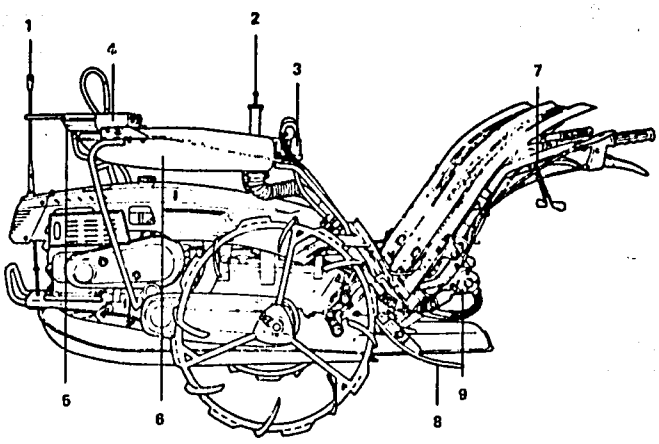

Fig. 1. Transplanting machine with a fertilizer applicator: 1) sighting post, 2) fertilizer level gauge, 3) flow indicator, 4) cap, 5) overflow tray, 6) fertilizer tank, 7) control lever for transplanting, 8) fertilizer slurry pump, 9) injector nozzle. Adapted from Mitsui 1978. Permission to cite figure was granted by T. Oikawa, Yokendo Publisher.

let in, dry application was not feasible. For this reason, Indian scientists at the Central Rice Research Institute (CRRI) developed the mudball (or mud pellet) for application of ammonium sulfate. The required amount of ammonium sulfate was mixed with 5 to 10 times its weight of soil and the mixture made into a soft dough with water. Dried small balls of this material, about 2.5 cm in diameter, were thrust 5-7.5 cm deep into the soil between rows 30-45 cm apart of standing crop. The method has proved more efficient than the usual wet application. Some results of 8 years' trial were reported in the International Rice Commission meeting in Ceylon (Vachhani and Rao 1959).

At IRRI, deep placement trials with ammonium sulfate, urea, and some slow release N-fertilizers were made in 1964 and 1965 (IRRI 1965, 1966; Simsiman et al 1967). For traditional varieties, deep placement was so effective in supplying nitrogen that rice was damaged by lodging; for new varieties, deep placement by mudballs was more efficient than wet application followed by puddling. Tracer experiments with ^{15}N-labeled ammonium sulfate and urea (Simsiman et al 1967) indicated that mudball placement could give 60% recovery of fertilizers in straw and grains at harvest; with surfact broadcasting followed by puddling recovery was 28%. In 1965, injection of anhydrous ammonia by a portable applicator fabricated from an oxygen cylinder was tried (IRRI 1965).

Trials and improvement to incorporate nitrogen fertilizer into the soil either by mudball or by a handy applicator have continued at IRRI. Application of fertilizer to the root zone was combined with root zone application of pesticides (Pathak et al 1974). To eliminate labor requirements for the preparation of mudballs, urea briquets, large granules, and sulfur-coated urea were tried. Recently a plow sole granular-chemical applicator, attachable to either an animal-driven or engine-driven plow, was developed (Labro et al 1978).

Ammonia volatilization as a possible loss mechanism

Iwata and Okuda (1937) studied ammonia volatilization loss from flooded soil. Except in strongly alkaline soil (pH 8.5), volatilization loss was negligible. In neutral soils, ammonia volatilization from surface-applied nitrogen fertilizer has long been considered negligible.

Research at IRRI (IRRI 1977) pointed to high pH (∿ 9.5) in floodwater due to photosynthetic activities by aquatic biota at midday as a possible cause of ammonia volatilization. Loss of fertilizer nitrogen that was applied on the soil surface was estimated by:

- open vs closed bottle method (difference in ammonium nitrogen between closed and open bottles was attributed to volatilization loss),
- short period change of ammonium nitrogen content in floodwater that was taken from the field and placed in a small pan in the same field, and
- the aerodynamic technique for measuring ammonia flux over the field.

The addition of herbicide, which inhibited algal growth, depressed the increase of midday pH and, consequently, loss of ammonia.

Mikkelsen et al (1978) conducted experiments to verify ammonia loss from flooded rice soils with high pH (7.0) and low pH (5.7). Ammonia volatilization loss as high as 20% of the applied nitrogen in neutral soil was recorded by an acid trap through which the atmosphere over the floodwater passed. In acidic soil the loss did not exceed 1% of applied nitrogen.

The importance of ammonia volatilization relative to nitrification-denitrification loss, however, remains to be quantified in varying soils.

International network of fertilizer trials for wetland rice

In 1962-68, a joint FAO/IAEA (International Atomic Energy Agency) effort funded a coordinated program to study by the isotope technique the uptake of nitrogen and phosphorus fertilizer by wetland rice (1970). The use of ^{15}N-labeled ammonium sulfate in large-scale field trials indicated that efficiency of nitrogen use for most soil types can be greatly increased by placing the fertilizer 5-15 cm deep at transplanting or by applying it on the surface as a single dose 2 weeks before panicle initiation. In soils of extremely low or high pH, placement had no appreciable effect on the use of nitrogen from the fertilizer (Table 5). The East-West Center, University of Hawaii, organized a network trial to test the effect of deep placement of urea briquets and other fertilizers on wetland rice. Results of 25 field experiments in 9 countries during 1976-77 indicated that single-point, deep placement of nitrogen fertilizer as basal application increased yields considerably especially in early- to medium-maturing varieties (East-West Center 1978).

In 1975 to 1977, an international network, with three-way collaboration between national programs, IRRI, and the International Fertilizer Development Center (IFDC), was formed (IRRI 1978). The main objective of the project (International Network on Fertilizer Efficiency in Rice, INFER) is to obtain an insight into the relationship between nitrogen source, nitrogen management, and nitrogen efficiency in a variety of environments. With split application of urea as a benchmark treatment, urea mudball, urea briquet, and sulfur-coated urea were tested as basal applications. From 1975 to 1977, 84 trials were conducted in 11 countries. Among 22 dry-season trials, about 60% of deep placement trials with either urea mudball or sulfur-coated urea gave statistically significant yield increase over split application. Among 55 wet-season trials, about 40% gave significantly higher grain yield with either urea mudballs, urea briquet, or sulfur-coated urea.

Table 5. Effect of placement of nitrogen fertilizer on nitrogen use of efficiency by the crop as determined by using ^{15}N-labeled ammonium sulfate (International Atomic Energy Agency 1970).

Site	Percentage of N in plant derived from fertilizer		pH (H_2O)
	Surface application	Deep placement	
Burma	12.3	20.0	4.9
Ceylon	12.3	18.6	7.3
China, Republic of (Taipei, Taiwan)	16.7	22.7	5.5
Hungary	4.7	40.7	7.6
India I	27.6	35.3	-
India II	25.3	31.3	-
Italy	13.0	15.0	5.5
Korea I	3.3	4.9	5.0
Korea II	-	-	5.5
Madagascar	15.3	18.3	4.8
E. Pakistan	10.0	17.0	5.3
W. Pakistan	25.7	28.0	8.1
Philippines	17.7	23.3	6.1
Thailand	23.0	23.3	4.7
UAR I	23.7	23.0	8.2
UAR II	27.3	28.7	7.9

Implications for tropical rice farmers

All international network projects for increasing efficiency of nitrogen fertilizers for tropical wetland rice have confirmed the benefits of deep placement of nitrogen fertilizer. Despite evidence and knowledge, few farmers in the tropics have adopted the improved method of application. R. W. Herdt (IRRI Agricultural Economics Department, personal communication) studied the time and amount of nitrogen fertilizer application to rice among farmers in three Philippine provinces. The survey showed time of fertilizer application scattered from the day of transplanting to 40 days after transplanting. At 1 to 20 days and 41 to 50 days after transplanting,

the amount of fertilizer applied peaked. Unpredictable timing of irrigation, and high labor consumption for land preparation -- constraints that Japanese farmers had faced -- still severely affect most farmers in tropical regions. It must be remembered that adoption of deep placement in Japan was not widespread before some form of fertilizer applicators or chemical or physical forms of fertilizer to facilitate deep placement were introduced.

Murayama (1979) estimated nitrogen fertilizer efficiency in national rice production in Japan. Fertilizer efficiency increased greatly since 1955, as N-fertilizer consumption increased. Murayama ascribed this increased fertilizer efficiency to the improvement of fertilizer placement and timing. A nitrogen fertilizer application method focusing on the latter half of the growing period of rice is now widely adopted by Japanese farmers who aim at paddy yields higher than 5.8 t (4.5 t brown rice)/ha. Better timing of nitrogen fertilizer is another key factor in improving fertilizer efficiency in wetland rice.

REFERENCES CITED

East-West Center. 1978. Proceedings: second review meeting I.N.P.U.T.S. Project. Honolulu, Hawaii, May 8-19, 1978. Hawaii, USA.

International Atomic Energy Agency. 1970. Rice fertilization. Tech. Rep. Ser. 108. 175 p.

International Rice Commission. 1951. Report of the first meeting of the working party of fertilizer. Bogor, Indonesia, April 1951.

IRRI (International Rice Research Institute). 1965. Annual report 1964. Los Baños, Philippines. 335 p.

IRRI (International Rice Research Institute). 1966. Annual report 1965. Los Baños, Philippines. 357 p.

IRRI (International Rice Research Institute). 1977. Annual report 1967. Los Baños, Philippines. 418 p.

IRRI (International Rice Research Institute). 1978. Summary report on the first and second International Trials on Nitrogen Fertilizer Efficiency in Rice (INFER) for 1975-1977. (Revised June 1978). Los Baños, Laguna, Philippines. 30 p.

Iwata, T., and A. Okuda. 1937. Ammonia volatilization from soil. J. Sci. Soil Manure, Jpn. 11(2): 185-187.

Kunitake, M. 1962. Studies on the deep placement of urea subsequent to transplantation /in Japanese/. Rep. Niigata Agric. Exp. Stn. 13.

Labro, S., G. Salazar, A. Resurreccion, and D. O. Kuether. 1978. The development of the IRRI plowsole fertilizer applicator. Paper presented at a Saturday seminar, International Rice Research Institute, 8 July 1978.

Mikkelsen, D. S., S. K. De Datta, and W. N. Obcemea. 1978. Ammonia volatilization losses from flooded rice soils. Soil Sci. Soc. Am. J. 42:725-730.

Mitsui, S. 1954. Inorganic nutrition fertilization and soil amelioration. Yokendo Publ, Tokyo. 107 p.

Mitsui, S., ed. 1968. Urea, its characteristics and efficient use as fertilizer in Japan. Urea Research Organization of Japan, Ammonium Sulfate Industry Organization, Tokyo. 106 p.

Mitsui, S. 1977. Recognition of the importance of denitrification and its impact on various improved and mechanized applications of nitrogen to rice plant. Pages 259-268 *in* Society of the Science in Soil and Manure, Japan. Proceedings of the International Seminar on Soil Environment and Fertility Management in Intensive Agriculture (SEFMIA), Tokyo-Japan, 1977. Tokyo.

Mitsui, S. 1978. The denitrification in paddy soil - its discovery and ripple /in Japanese/. Yokendo Publ. Co, Tokyo. 128 p.

Murayama, N. 1979. The importance of nitrogen for rice production. Pages 5-23 *in* International Rice Research Institute. Nitrogen and rice. Los Baños, Laguna, Philippines.

Pathak, M. D., D. Encarnacion, and H. Dupo. 1974. Application of insecticides in the root zone of rice plants. Indian J. Plant Prot. 1:1-16.

Pearsall, W. H., and C. H. Mortimer. 1939. Oxidation reduction potentials in waterlogged soils, natural water and muds. J. Ecol. 27:485-501.

Ramiah, K., M. V. Vachhani, and C. T. Abichandai. 1951. A rational method of applying sulphate of ammonia to rice. Curr. Sci. 20:227-228.

Shioiri, M. 1941. Denitrification in paddy soil. Kagaku 11(1):24-30. (Translation available at IRRI Library)

Shioiri, M. 1942b. Denitrification in paddy soils /in Japanese/. J. Sci. Soil Manure, Jpn. 16(3): 104-116.

Shioiri, M. 1942a. Lectures on the method of nitrogen fertilizer application for wetland rice /in Japanese/. Pages 93-134 *in* Selected works of Dr. Shioiri - fertilizer and soil. Asakura Publisher, Tokyo, 1953.

Shioiri, M., and S. Mitsui. 1935a. Chemical composition and decomposition of algae and aquatic weeds grown in paddy soils /in Japanese/. J. Soc. Soil Manure, Jpn. 9(3):261-267.

Shioiri, M., and S. Mitsui. 1935b. Effect of soil stirring on the change of ammonium nitrogen in the submerged soil /in Japanese/. J. Soc. Soil Manure, Jpn. 9 (supplement):46-48.

Shioiri, M., and S. Aomine. 1937. Chemical changes of nitrogen in the submerged soil /in Japanese/. J. Sci. Soil Manure, Jpn. 11(4):389-392.

Shioiri, M., and S. Aomine. 1938. Chemical changes of nitrogen in the submerged soil /in Japanese/. J. Sci. Soil Manure, Jpn. 12(4):406-410.

Shioiri, M., and S. Aomine. 1939. Chemical changes of nitrogen in the submerged soil /in Japanese/. J. Sci. Soil Manure, Jpn. 13(5):284-287.

Simsiman, G. V., S. K. De Datta, and J. C. Moomaw. 1967. Sources of nitrogen and methods of application for flooded rice. J. Agric. Sci. Camb. 69-189-196.

Vachhani, C. T., and M. V. Rao. 1959. Method and time of application of ammonium suphate. Report #17th session of working party of rice soils, water and fertilizer practices. International Rice Commission, Ceylon.

Walter, H. M., D. R. Keeney, and I. R. Fillery. 1979. Inhibition of nitrification by acetylene. Soil Sci. Soc. Am. J. 434:195-196.

Other papers in this series

No. 1 Recent studies on the rice tungro disease at IRRI

No. 2 Specific soil chemical characteristics for rice production in Asia

No. 3 Biological nitrogen fixation in paddy field studies by in situ acetylene-reduction assays

No. 4 Transmission of rice tungro virus at various temperatures: A transitory virus-vector interaction

No. 5 Physicochemical properties of submerged soils in relation to fertility

No. 6 Screening rice for tolerance to mineral stresses

No. 7 Multi-site tests environments and breeding strategies for new rice technology

No. 8 Behavior of minor elements in paddy soils

No. 9 Zinc deficiency in rice: A review of research at the International Rice Research Institute

No. 10 Genetic and sociologic aspects of rice breeding in India

No. 11 Utilization of the Azolla-Anabaena complex as a nitrogen fertilizer for rice

No. 12 Scientific communication among rice breeders in 10 Asian nations

No. 13 Rice breeders in Asia: A 10-country survey of their backgrounds, attitudes, and use of genetic materials

No. 14 Drought and rice improvement in perspective

No. 15 Risk and uncertainty as factors in crop improvement research

No. 16 Rice ragged stunt disease in the Philippines

No. 17 Residues of carbofuran applied as a systemic insecticide in irrigated wetland rice: Implications for insect control

No. 18 Diffusion and adoption of genetic materials among rice breeding programs in Asia

No. 19 Methods of screening rices for varietal resistance to *Cercospora* leaf spot

No. 20 Tropical climate and its influence on rice

No. 21 Sulfur nutrition of wetland rice

No. 22 Land preparation and crop establishment for rainfed and lowland rice

No. 23 Genetic interrelationships of improved rice varieties in Asia

No. 24 Barriers to efficient capital investment in Asian agriculture

No. 25 Barriers to increased rice production in eastern India

No. 26 Rainfed lowland rice as a research priority – an economist's view

No. 27 Rice leaf folder: Mass rearing and a proposal for screening for varietal resistance in the greenhouse

No. 28 Measuring the economic benefits of new technologies to small rice farmers

No. 29 An analysis of the labor-intensive continuous rice production system at IRRI

No. 30 Biological constraints to farmers' rice yields in three Philippine provinces

No. 31 Changes in rice harvesting systems in Central Luzon and Laguna

No. 32 Variation in varietal reaction to rice tungro disease: Possible causes

No. 33 Determining superior cropping patterns for small farms in a dryland environment: Test of a methodology

No. 34 Evapotranspiration from rice fields

No. 35 Genetic analysis of traits related to grain characteristics and quality in two crosses of rice

No. 36 Aliwalas to rice garden: A case study of the intensification of rice farming in Camarines Sur, Philippines

The International Rice Research Institute
P.O. Box 933, Manila, Philippines

Stamp

ISSN 0115-3862