BIBLIOGRAPHIC DATA SHEET	1. CONTROL NUMBER PN-AAH-128	2. SUBJECT CLASSIFICATION (695) NA00-0000-0000

3. TITLE AND SUBTITLE (240)

Guidelines for analysis of environmental health planning in developing countries

4. PERSONAL AUTHORS (100)

Fraser, R. W.; Shani, Hadasa

5. CORPORATE AUTHORS (101)

Plog Research, Inc.

6. DOCUMENT DATE (110)	7. NUMBER OF PAGES (120)	8. ARC NUMBER (170)
1979	122p.	613.1.F842

9. REFERENCE ORGANIZATION (130)

HEW/PHS/OIH

10. SUPPLEMENTARY NOTES (500)

(In International Health Planning Methods series, v. 2)
(Prepared for the Office of International Health by Plog Research, Inc., as a sub-contractor to the E. H. White Co.,contract no. 282-77-0128)

11. ABSTRACT (950)

12. DESCRIPTORS (920)

Environmental health
Developing countries
Water supply and health
Waste disposal
Sanitation
Health planning
Water supply
Waste water
Pest control
Assessments

13. PROJECT NUMBER (150)

931006700

14. CONTRACT NO.(140)

RS/HEW/OIH-01-74

15. CONTRACT TYPE (140)

16. TYPE OF DOCUMENT (160)

58

AID 590-7 (10-79)

INSTRUCTIONS

1. **Control Number** - Each document shall carry a unique alphanumeric identification number. Use uppercase letters, Arabic numerals, and hyphens **only**, as in the following example: **PN-AAA-123.**

2. **Subject Classification** - Each document shall carry a valid subject classification code used to classify the research/technical document under a general primary subject, secondary subject, and/or geographic index code. Use uppercase letters, Arabic numerals, and hyphens **only**, as in the following example: **AA23-0000-G518.**

3. **Title and Subtitle** - The title should indicate the main title of the document and subordinate subtitle (if any).

4. **Personal Authors** - Enter the author's name(s) in the following sequence, **last name, first name (or initial), middle initial.**

5. **Corporate Authors** - Enter the corporate author(s) name.

6. **Document Date** - Enter the document publication year(s) as follows: **1979** or **1978 - 1979.**

7. **Number of Pages** - Enter the total number of pages followed by **'p'** for pages and a period, i.e. **123p.**

8. **ARC Number** - Enter the AID Reference Center catalog number.

9. **Reference Organization** - The reference organization must be a valid reference organization. Enter the name, acronym, or abbreviation.

10. **Supplementary Notes** - Enter any useful information about the document that is not included elsewhere. Each note should be enclosed in parentheses.

11. **Abstract** - Include a factual summary of the most significant information contained in the document.

12. **Descriptors** - Select the proper authorized terms that identify the major concept of the research/technical document and are sufficiently specific to be used as index entries for cataloging.

13. **Project Number** - This is a unique number(s) composed of the AID project number followed by a sub-project suffix.

14. **Contract Number** - Enter the AID contract number under which the document was produced.

15. **Contract Type** - Enter the type of AID contract which funded the research/technical activity responsible for producing the document.

16. **Type of Document** - Enter a valid code representing the document type.

PN-AAH-128 (30)

International Health
Planning Methods Series

2

Environmental Health Planning

Guidelines for Analysis of Environmental Health Planning in Developing Countries

Guidelines for Analysis of Environmental Health Planning

U.S. Department of Health, Education, and Welfare
Public Health Service
Office of the Assistant Secretary for Health
Office of International Health

This document was prepared for, and financed by, the Office of Health, Development Support Bureau, Agency for International Development by PLOG, Inc., Reseda, California, as a sub-contractor for E.H. White Company (Contract No. 282-77-0128). All requests or inquiries about this manual should be addressed to Mr. Paul Ahmed, Project Officer, Office of International Health, 5600 Fishers Lane, Rockville, Maryland 20857.

DHEW Publication No. (PHS) 79-50081

PREFACE TO THE SERIES

The International Health Planning Methods Series has been developed by the Office of International Health, Public Health Service on request of the Agency for International Development.

The series consists of ten basic volumes which cover a variety of health issues considered vital for effective development planning. These ten volumes are supplemented by six additional works in the International Health Reference Series, which list resource and reference material in the same subject areas.

The International Health Planning Methods Series is intended to assist health sector advisors, administrators and planners in countries where the Agency for International Development supports health related activities. Each manual attempts to be both a practical tool and a source book within a specialized area of concern. Contributors to these volumes are recognized authorities with many years of experience in specialized fields. Specific methods for collecting information and using it in the planning process are included in each manual.

The six supporting documents in the International Health Reference Series contain reports of literature surveys and bibliographies in selected subject areas. These are intended for the serious researcher and are less appropriate for broad field distribution.

The volumes in the International Health Planning Methods Series contain the collective effort of dozens of experienced professionals who have contributed knowledge, research and organizational skills. Through this effort they hope to provide the AID field officer and his host country counterparts with a systematic approach to health planning in developing countries.

PREFACE TO VOLUME TWO

This manual for planning in the field of environmental health is the second volume in a series of works known collectively as the International Health Planning Methods Series.

The series was produced by the Office of International Health as requested by the Agency for International Development to provide AID advisors and national health officials in developing countries with critically needed guidelines for incorporating environmental health planning into national plans for economic development.

This volume covers material ranging from contemporary issues in environmental health, through principles of environmental health assessments, planning and evaluation, to consideration of specific types of projects having environmental health impact.

In addition to the need for fundamental improvements in such areas as drinking water supply, wastewater and excreta disposal, and pest control, the authors have noted the occasionally adverse effect of economic development projects. Examples are drawn from the fields of agriculture, industry, transport, and land use patterns.

Preparation of this volume was undertaken for the Office of International Health by Plog Research, Inc., of Reseda, California, functioning as a subcontractor to the E.H. White & Co., Management Consultants, of San Francisco, California. Chapters in this volume were prepared by Renee White Fraser, Ph.D., and Hadasa Shani, M.P.H.

This manual is important because it contains a unique compilation of assessment issues, data considerations, alternative technologies and practical planning methods that are specifically related to developing countries. While the literature in the general areas of environmental health and sanitation is very large, little emphasis until recently has been placed on reporting programs from developing areas. Within this volume the emphasis is almost exclusively on those areas.

Guidance for conducting assessments, evaluation and planning in the environmental health sector is contained in this manual. The authors have been guided by three general objectives during the production of this work: (1) to describe the inter-related environmental

hazards to health relevant to people in developing nations; (2) to identify competing elements, priorities and institutional relationships affecting available solutions; (3) to offer components needed to make planning decisions, including recommendations for data collection methods, surveillance methods, standards and alternative technologies.

It should be understood that this is a selective study. To review all possible options within the broad field of environmental health would require many volumes of instruction. Therefore, instead of attempting to be an exhaustive or even comprehensive study, this manual includes only a selective discussion of assessment, surveillance and data collection procedures. The selection has been based primarily on relevance and practical applicability to developing nations.

This same restriction has been applied to technologies and planning considerations. Rather than present an exhaustive review of potential technologies including everything from nomadic settlements to metropolitan cities, emphasis has been placed on technologies that are practical for rural village or perirural circumstances. Those interested in higher level technologies are directed within the manual to additional available resources.

The authors of this manual, in addition to describing technical aspects of certain environmental health control programs, have also expressed personal viewpoints concerning some programs in developing countries. While their viewpoints generally coincide with those of organizations or agencies with whom they are associated, the material in this manual should not be construed to reflect the official policy of any agency or organization.

Environmental health constitutes a critical problem in developing countries. This volume, it is hoped, will assist in effectively evaluating current programs, and it should provide a sound basis for environmental health planning within the context of national development.

Paul Ahmed

Paul I. Ahmed
Project Officer
Office of International Health

ACKNOWLEDGMENTS

Each volume in the International Health Planning Methods Series has been the work of many people. In addition to the primary authors, each manual has involved government reviewers and reviewers from positions outside government, editors, revisors, and numerous technical and support personnel. Substantial contributions have been made by manual advisors, who provided the authors with the benefit of their knowledge and experience in the fields under study.

With reference to Volume 2: Environmental Health Planning, special thanks are in order for contributions made by John Hanlon, Vic Wehmann, Gary Hart, James Thompson, Irv Taylor, and Steven Lucas.

While the present work could not have been completed without the assistance of these individuals, responsibility for the content of this manual rests solely with the authors.

TABLE OF CONTENTS

CHAPTER ONE: CONTEMPORARY ISSUES IN ENVIRONMENTAL HEALTH..... 1

CHAPTER TWO: PRINCIPLES OF ENVIRONMENTAL HEALTH ASSESSMENT..... 8

CHAPTER THREE: PRINCIPLES OF ENVIRONMENTAL HEALTH PLANNING..... 15

CHAPTER FOUR: PRINCIPLES OF ENVIRONMENTAL HEALTH EVALUATION..... 23

CHAPTER FIVE: DRINKING WATER 25

CHAPTER SIX: WASTEWATER AND EXCRETA DISPOSAL 57

CHAPTER SEVEN: FINANCING WATER PROGRAMS 86

CHAPTER EIGHT: SOLID WASTE 94

CHAPTER NINE: PESTS AND PEST CONTROL 101

CHAPTER ONE

CONTEMPORARY ISSUES IN ENVIRONMENTAL HEALTH

The environmental health problems of developing countries fall broadly into two categories: the problems arising out of poverty or the inadequacy of development, and the problems that arise out of the process of development. The severe environmental health problems in developing areas (e.g., inadequate potable water supplies, unhealthy excreta deposition, etc.) can be overcome by the process of development. However, poorly planned and unregulated development can have critical negative consequences for the health of the people of a developing nation as well as for the ecological system that affects the rest of the world.

A large literature has been collected demonstrating that health problems can limit development potential in serious ways. Chronic disease and malnutrition reduce productivity and availability of labor; undernourished ill children do not learn normally and subsequently are not easily trainable; chronic disease produces a financial drain on a society and directly reduces its economic resources. Investors are reticent to locate factories, tourist facilities, and other economic ventures in areas lacking good sanitation, a relatively healthy work force, or where significant health hazards exist.

An enormous waste of resources occurs when poor health conditions restrict settlement in areas with fertile land or other natural resources. The presence of onchocerciasis in Western Africa has restricted access to land and resources (World Bank, 1975). Studies of Nepal, Sri Lanka, and parts of Mexico demonstrate instances where malaria eradication has allowed a movement of labor and capital into resource—rich districts from less resourceful areas, with a net increase in the total output (Taylor, 1967). A successful settlement scheme was carried out similarly in the Anchan Corridor in Nigeria after sleeping sickness had been controlled (McKelvey, 1973).

Many attempts at economic development indicate that it is a mistake to equate the goal of development with the narrowly conceived objective of economic growth as measured by a rise in gross national product. The development process has been broadened to include the attainment of certain social and cultural goals. The incorporation of environmental issues and environmental health concerns in the expanded concept and goals of development has important implications for planning and for policy making.

Health planning carried out as an integral part of a nation's or region's socioeconomic plan is the ideal. This is rarely the case in reality. Environmental health objectives compete with individual plans and objectives submitted by various sectors. Most often a "trade-off" between health and broad growth objectives must be made. This manual provides assessment methods to identify specific environmental hazards to health, and information about alternatives in technology to control those hazards. In the writing of this document, an emphasis has been placed on the costs of various interventions and the elaboration

of how the economic goals of development can be supported by various technologies in the field of environmental health. It is believed that a more complete understanding of the goals of socioeconomic development and its implications can aid the planner concerned with environmental factors and health in presenting alternatives in technology that persuasively meet those goals and also support health.

In the process of planning to enhance economic growth, any country should ascertain the nature of its environmental problems and assets. Environmental hazards to health constitute one set of such problems. In addition, the environmental side effects and their health consequences which are encountered in the development of various sectors should receive selective treatment. These must be evaluated in terms of the development priorities which guide the planning considerations of any country. Those side effects and health consequences that directly frustrate the development objectives should be given immediate attention for remedial action.

The section will briefly discuss the environmental side effects of some of the consequent health effects that have been found to accompany the process of development in agriculture, industry, transport, and human settlement. These side effects can be grouped into several categories.

Resource deterioration: the deterioration, for example, of mineral, soil, or forest resources;
Biological pollution: the pollution represented by agents of human disease, and by animal and plant pests;
Chemical pollution: including air pollutants, industrial effluents, pesticides, metals, and detergent components and similar agents;
Physical disruption: as reflected, for example, in thermal pollution, silting, and noise; and
Social disruption: of which congestion and loss of a sense of community are examples.

Agriculture

The process of agricultural development often involves the transformation of low productivity systems of agriculture into systems where productivity is relatively high. In this transformation process, cultivation practices on existing lands are improved, the infrastructure of facilities and services for agricultural production is expanded, and new lands are made suitable for cultivation through irrigation systems and river basin development. These changes are crucial to the development process but they may also generate side effects of varying importance, many of which have consequences for health. The environmental effects known to accompany these changes will be briefly presented here. Health consequences associated with these environmental side effects will be discussed in later sections.

Traditional agriculture in many tropical regions is characterized by a range of environmental hazards. These include leaching, particularly the rapid leaching of nutrients and degradation of planted farmland following the removal of a forest; rapid soil depletion resulting from permanent cultivation of a relatively infertile soil which cannot be supported without the addition of nutrients; soil erosion through variable and heavy rainfalls and prolonged droughts or flash floods; and indiscriminate loss of forest resources through slash-and-burn techniques. Although some of this kind of environmental deterioration can be corrected if unlimited funds are available, some are so costly to correct as to be essentially irreversible. The fragility of tropical

ecosystems may cause environmental deterioration to proceed rapidly and recovery to be slow. In one instance, the establishment of an agricultural colony failed when deforestation resulted in the hardening of lateritic fields within five years. In another country, previously ungrazed savanna was destroyed by over-grazing in two to three years, and will probably be lost to production for a very long period. There are opportunities for preventing some of these environmental hazards through proper planning and anticipatory action. For instance, under-employed labor in rural areas may be mobilized in terracing mountain sides and in reforestation programs.

The environmental hazards in the case of modern agricultural techniques arise mainly from the chemical control of weeds and pests and from irrigation works. The side effects resulting from the toxicity of insecticides and pesticides to fish and birds as well as humans make them a major hazard. The enormous problems that can arise out of the improper use of chemical pesticides has been demonstrated in Ghana. Agriculture is the mainstay of Ghana's economy. The rapid increase in both amount and number of pesticides in that country has aided in its development.

The multiplicity of pesticides in the hands of people who may not be aware of their toxicity has led to problems. For example, in 1973 a total of 144 cases of alkylmercury poisoning, with 20 deaths, were reported in rural southern Ghana. Out of ignorance, the patients had eaten maize which was dressed with ethyl mercuric chloride. Some of those involved were aware of the toxicity of the pesticide but from their past experience with DDT believed that thorough washing of the grain with warm water would remove all the poison. Agricultural pollution requires close coordination with health services to ensure high agricultural productivity without health hazards to people and livestock. The problems that can arise from the improper use of chemical pesticides and the pollution of food and water sources by these substances has led to searches for alternatives to chemicals in pest control systems. These alternatives will be discussed in the pest control chapter.

The use of irrigation systems is often necessary to increase cultivatable land. Unless matched by drainage facilities, irrigation projects can result in soil salinization and water-logging. The extension of irrigation and of rice cultivation also provides large surfaces of water for the breeding of disease vectors. Examples of this include the breeding of Anopheles in Africa and the Americas, Culex tritaeniorhunchus in Asia (Cruishank, et. al, 1976) and the proliferation of bilharzia (schistosomiasis). Man-made lakes and irrigation projects also attract birds and rats, the reservoirs of numerous arboviruses.

River basin development projects are instruments of major importance for economic and social development. These projects are often an essential part of development programs but serious environmental health consequences have been associated with the construction of these projects. This underscores the importance of careful study, analysis, and planning in the design of dams and the selection of dam sites.

The Aswan Dam offers an example. While more than doubling Egypt's irrigated farmland, the Aswan Dam also greatly reduced the fisheries in the eastern end of the Mediterranean. In addition, rich nutrients that formerly fed the fish, and other elements, produced a rapid silting behind the dam and a profusion of plant growth in Lake Nasser (Dahlberg, 1974). The expansion of irrigation through canals in Egypt has led to increases in the incidence of bilharzia (schistosomiasis).

The formation of the Volta Lake provides another example of the critical importance of planning for health concerns in river basin development. An epidemiological survey of the Volta River area showed the endemicity rate of schistosomiasis among school children was five percent in 1960-61. After the construction of the dam, surveys showed a 90 percent rate in school children (Derban, 1975). The increase in disease in certain localities after the development project occurred was found to be due to (a) biological explosion of aquatic weeds which are a habitat for the snail vectors and (b) an increase in snails, and their migration into the area of fishing communities already suffering from urinary schistosomiasis (Derban, 1975), The Volta Lake eliminated many of the major breeding sites of the blackfly, Simulium damnosum, that carries onchocerciasis (river blindness). However, the fast flow below the dam created the well-oxygenated water needed for breeding. In some areas below the dam, and also near the rapid streams, prevalence rates of onchocerciasis among all people over 15 years old are as high as 90 percent (Derban, 1975). One health benefit of the formation of the lake has been the decrease in African sleeping sickness. The tsetse fly (Glossina palpalis), its principal vector, was harbored in large areas of forest that were drowned by the lake.

River basin development also requires massive displacement of populations and the loss of wildlife and mineral resources. The emergence of some of these adverse effects is gradual. Some of these can be readily corrected, but others are practically irreversible.

As is evident from these examples, some of the consequences of agricultural development can be on a very large scale and may greatly frustrate progress toward the goals of the development project. Careful planning with close attention to consequences for the environment and the health of the people of the area is necessary.

Industry

Pollution emanating from industrial development represents more of a potential than an actual threat at this time in many developing countries. However, there are a number of instances of industrial pollution, even in the cities of these countries. The developing countries have an advantage in so far as they can learn from the experience of the developed nations. By making sensible decisions on the location of industries and their waste disposal, and by instituting social controls under which the private sector must function, they can avoid some of the worst environmental problems that have arisen in connection with industrial pollution. Developing countries should give careful consideration to the question of location of industries and formulate concrete guidelines in the context of their own national situation, which would prevent the rise of major environmental problems.

The problems of air pollution created by urbanization and industrialization have affected major cities in several developing countries. In India, a recent study made by the Central Public Health Engineering Research Institute, Nagpur, reported that the problem of air pollution in four major cities studied is comparable in some parts to those problems of the most polluted cities in the world. This is particularly the case with suspended particulate concentrations and the levels of carbon monoxide and sulphur dioxide. The concentration of carbon monoxide found at street level in Calcutta varied from as high as 33 parts per million to less than ten parts per million. These levels of carbon monoxide are comparable to those found in New York, Chicago, and London. (Ramalingaswami, 1973). Another factor in India and most developing countries is the smothering smoke from burning cow-dung, firewood and raw coal.

Transport

The needs and consequences of transportation systems increase with the development process. Examples from developed countries illustrate many of the problems that can occur, particularly where reliance is placed primarily on owner-operated vehicle systems. These include, first of all, the effects of automobile exhaust on health, vegetation, and landscape. Additional consequences include accidents, pressure on urban space, and distorted configurations of human settlements. Many of these problems can be reduced by developing well-planned systems of mass transit.

Human Settlements

The predominant part of the population in most developing countries still lives in the rural areas. The stress of rapid population growth has aggravated the environmental hazards associated with poverty. This growth in population has also brought forward problems of employment. The expansion of economic activities in the urban areas will not suffice to provide employment opportunities for the full increase in the work force. A substantial part of the population still needs to remain in the rural areas, and it is vital that employment opportunities be created in these areas.

In the urban areas of the developing world, environmental quality is intimately related to social welfare. Urbanization within a country can, of course, be accompanied by increased economic and social welfare, and urban concentration of dynamic enterprises can serve a valuable function as "development poles," generating growth throughout wider regions. However, the carrying capacity of any city submitted to rapid population growth is eventually overextended. Disease, water supply shortages, lack of sewage treatment, congestion, and deteriorating housing are all manifestations of environmental stress. The more developed urban areas are now confronted with chemical contamination of air and water and the hazards of social disorganization.

The major cities of the developing world experienced a fourfold increase in their populations between 1920 and 1960. Today, in many developing countries, the influx of population is straining the existing capacity of cities. Their failure is symptomatic of imbalance in the development process, which could produce total breakdown, in some instances, in the coming decade. Each city has its own carrying capacity, which changes over time. This depends on the level and combination of population, economic and human resources, and infrastructure, which are, in turn, in constant evolution. But once that carrying capacity is exceeded, degradation proceeds very quickly. There is, however, a high possibility of reversibility in this trend, which is not the case with natural systems. Government actions can reverse the city's deterioration if sufficient resources can be mobilized.

Land Use Planning-Urban

Land use planning considered within the framework of the urban planning process is that sector of planning concerned with the location of various urban activities and the intensity of those activities. But, insofar as land use creates the physical setting for economic and social system activities it should be guided by strategic planning that considers the promotion of environment quality and the quality of life of the human being affected.

In the field of land use planning there are several alternative approaches being taken on three fronts of innovation. The three categories of innovation are:

In the redefinition of comprehensive planning to incorporate a concern with land use/environmental quality relationships;
In the inclusion of environmental system information related to health and development, and evaluation criteria in land-use plan and policy development;
In the emphasis on implementation and in the development of a more integrated planning process— guidance system planning.

Alternative Planning Approaches

There are two basic ways in which comprehensive planning has been reshaped to incorporate environmental objectives including concerns for health. The first method is to add a new sector to the total planning program which focuses specifically on environmental systems in a manner parallel to that of other sector planning like economic development or transportation. The second method involves a more fundamental realignment of comprehensive planning. This requires an examination of the relationships among the objectives of the various sectors or systems that constitute the urban area.

These relationships are supportive and conflicting. The focus is to develop some resolution among them that will guide planning within each of the sectors toward a more coordinated goal set. Community or regional objectives are realigned in the light of an awareness of the environmental and health implications of the utilization of land and the people who inhabit it. Environmental quality is viewed as an integral element in all planning endeavors.

These two methods of redefinition of comprehensive planning goals differ primarily in purpose. The addition of a new sector is aimed at the development of an action program to achieve agreed upon environmental objectives such as national or regional water quality standards. The time frame of this planning strategy is short range. In the second method, the objective is to develop an understanding of the complex interdependencies among environmental systems and people. These two approaches need not be viewed as mutually exclusive. Personnel responsible for considering and planning for environmental quality concerns could be built into different sectors to facilitate a coordinated set of goals and relevant action programs.

There are three general schools of thought which have affected current approaches to defining an environmental system information base. The first focuses on an inventory of the key natural subsystems in the planning area which pose resource constraints on urban development. Another approach is also based on an inventory of the subsystems but interprets these and considers them as interdependent processes in the ecosystem. The third approach also considers the key natural subsystems but interprets their significance in terms of the visual perception of the environment. The first approach has been called a natural system inventory analysis; the second has been called ecosystem analysis; and, the third is labeled as visual landscape analysis.

The information generated by each of these approaches may be used at various stages in the planning process to monitor current environmental needs or trends and to predict future conflicts in order to focus planning priorities. In addition, it can be used to determine optimal land use allocations from an environmental quality input along with other economic and social system demands for land-use planning. The information is also used to determine the environmental impact and potential consequences for health of alternative plans or policies and to determine the design of a project in order to plan for environmental health concerns and environmental quality.

A natural systems inventory analysis approach leads to the development of a base of information on the natural environment. This base may be used in the planning process as a rationale for determining optimal space allocations for land-use. The central principle is that certain features of the natural environment exhibit an intrinsic suitability for particular land uses. Common environmental sybsystems that are inventoried include geology, pedology (soils), hydrology, meteorology, climatology, plant associations, and fish and wildlife.

There appear to be two fundamental objectives in this planning process: first, to determine environmental constraints to development, and second, to protect the environment from development. Another less common but important objective is to insure and provide for suitable health consequences to human beings.

Guidance system planning represents a new land-use planning process that emphasizes implementation. The ultimate aim of this process is the infusion of goals and information which reflect an environmental system or natural process orientation, into the urbanization process. It is clear that concern for the environmental system as it affects health and disease are compatible with these aims. Furthermore, information and analysis related to those concerns could be incorporated into this planning strategy.

References:

CIBA Foundation Symposium. Teamwork for World Health. Amsterdam: Associated Scientific Publishers, 1971.

CIBA Foundation Symposium 23. Human Rights in Health. Amsterdam: Associated Scientific Publisher, 1974.

CIBA Foundation Symposium 32. Health and Industrial Growth. Amsterdam: Associated Scientific Publishers, 1975.

Holdren, J. P. and Ehrlich, P.R. Global Ecology, Readings Toward a Rational Strategy for Man. New York: Harcourt, Brace, Jovanovich, 1971.

World Health Organization, Regional Office for Europe. The Health Aspects of Urban Development: Report on a Seminar, Stuttgart, 3-7 December, 1973. (Doc. No. EURO 4108), Copenhagen, 1974.

CHAPTER TWO

PRINCIPLES OF ENVIRONMENTAL HEALTH ASSESSMENT

The assessment process will begin with an initial briefing, first in Washington and then within the country itself. Meetings will be arranged with ministry and embassy officials, usually in the capital city. At this time some preliminary data may be provided by the government officials. Other contacts should be established, however, with alternative sources of data, such as private industries or universities. At all times, whether within the capital or in the outlying regions, power structures should be evaluated and, if possible, relationships with influential people should be cultivated. This should be helpful in gaining some understanding of the national political situation.

With this general background as a framework, one should determine national policies and objectives, specifically with regard to health and the environment. Political associations related to environmental health should be identified as well as any programs currently in progress. Relevant bureaucracies and industries functioning within the environmental health sector, particularly in the decision-making process, should also be determined.

An evaluation of all past programs should be made. To accomplish this, one can look at any available records that were kept. In addition, one should try to talk to several people who had been involved in the programs. Those people should provide useful information on the actual resources utilized, those social and cultural factors that may have a significant effect on program effectiveness, what populations were actually affected, and their overall evaluation of the successes and failures of those programs. Another important factor to ascertain on all levels is the amount of funding available. Records of past and present levels of funding are, clearly, a key determinant in the workings of any program. These will ultimately be used in financial projections for the future.

Once the social, political, and financial picture has been assessed (to whatever extent possible), the technological components of a system must be assessed. Data should be gathered on the technological capabilities of the country. This should include the ability to manufacture necessary equipment locally, availability of resources, manpower, costs to train personnel, etc. In addition, the feasibility of using certain technologies must be assessed in terms of terrain, climate, maintenance requirements, social and cultural constraints, and availability of equipment. The spectrum of technologies available should be assessed and, with the above factors in mind, alternatives chosen. Another critical factor to consider is the rate of growth at which the country (or its officials) wish to proceed. This will directly affect the choices made.

Closely related to the technologies chosen are environmental conditions that exist and the infra-structural requirements that will be required to

maintain the system. Environmental data should be collected from many sources. If data are available, they should be obtained and verified, if possible, by spot check surveys of existing environmental conditions.

The assessment process, as an integral part of the planning process, provides necessary data for both program planning and evaluation. Each step in program planning involves certain assessment practices, all of which then provide the basis for evaluating the effectiveness of the program. The bases and data sources for these assessments will be described in the following section. These include the following: description of the area and/or existing programs; medical and sanitary data; resources available - past programs and existing data; surveillance and monitoring activities.

Description of the Area

A general description of the physical characteristics of an area is a necessary prerequisite for the planning of any environmental health program. The relative importance and emphasis placed on these data will vary from program to program.

Typical data include: location, topography, climate, character, communications, maps. Geology and hydrology must be considered, with particular reference to nature of top and underground layers of the soil, its porosity, presence and abundance of ground water (if any), direction of flow, level of groundwater table, its appearance and potability, estimation of yields of springs and rivers. Population should be listed, including number, age groups, sex, density, growth. Industries and agriculture, with particular reference to irrigation, drainage, and soil fertilizing practices are important.

Medical and Sanitary Data

Preliminary medical and sanitary data are critical to the design of any environmental health program. These data should not be restricted merely to the presence or absence of disease or sanitary facilities, but should involve assessments of qualitative factors.

General health of the population includes special emphasis on communicable diseases and on intestinal infections, helminth infestations, and trachoma and acute conjunctivitis in infants and children. Vital statistics include mortality, and morbidity data. Health and sanitary administration refers to organization, personnel, budget, and activities of voluntary or other agencies in the field of sanitation.

Existing sanitary conditions in the area includes reference to description of private and public latrines, their distribution and use, to wells, springs, and other systems of water supply (including such information as number of persons served by piped water supplies, and by wells, the consumption and uses of water, number of dwellings with private water supply, etc); to wastes collection, disposal, and composting; to milk and food sanitation; to insects (flies, fleas, lice, mosquitoes); to health aspects and standards of housing; and to school sanitation.

Sociological and cultural patterns refer to community and family organization, leadership, customs, beliefs, and habits bearing on personal hygiene and community sanitation. Present methods (if any) of health education of the public.

Resources Available

The availability and adequacy of resources required for the implementation of any environmental health program are clearly of key import in its success or failure.

Types of resources to be assessed include the general economic level of the population; average per capita income. Cooperation expected from

agricultural, educational and other agencies or groups for training and health education of the public.

Housing and vehicle transport may be key resources, as are vehicle and equipment repair and maintenance facilities; sources of power (electricity, fuel); local construction materials and their costs; local craftsmen and wages; and potential resources for self-help.

Surveillance and Monitoring Activities

Once a program is in existence many of the data in the three previous selections will still be periodically collected. The types and frequency of data collection, methods of sampling and analysis, criteria and standards, facilities, and manpower are assessed in an ongoing program of surveillance and monitoring. These activities may be performed by the agency performing the sanitary service or by a separate surveillance agency. Judgment in this respect must be made by individual governments, however, the World Health Organization (1976) recommends the establishment of a separate agency for the surveillance of drinking water quality.

A general outline of broad issues related to the assessment process would include: sampling and surveying, criteria and standards, facilities and manpower.

Sampling and surveying are monitored in terms of data sources, records kept and compiled, frequency of data collection, key sampling points with reference to shifting locations and sampling in problem areas, common tests performed, adequacy of facilities and personnel, alternative methods, and costs.

Criteria and standards assessment includes examination of the basis and validity of existent ones, and the degree to which they are being met by current practices.

Facilities assessment includes examination of adequacy of existent labs and other facilities and costs.

Manpower assessment includes examination of existing quantity and training of personnel, evaluation of existing and alternative uses of technical and administrative staff, and evaluation of alternative or supplementary training procedures.

Epidemiology: Its Relation to Environmental Health

Historically, epidemiology was first used as a method of determining the etiology of infectious disease epidemics in populations. However, at present, epidemiologists define the field broadly as "The study of the distribution and determinants of disease or disability in human populations." This definition extends far beyond the sphere of the communicable disease epidemic to further encompass a wide variety of chronic and acute disabilities, either endemic or epidemic, resulting from numerous noninfectious agents or phenomena. In the developing countries communicable diseases are the primary focus of the epidemiologist. There is increasing concern, however, with the health effects, both acute and chronic, of chemical and physical agents in the environment. It is this area which concerns the environmental epidemiologist who attempts to establish dose-reponse relationships between environmental phenomena and health in human populations.

Establishment of a cause and effect relationship, however, presents many difficulties. Consequently, the primary means available to the investigator is the combining of environmental monitoring data with existing health data, essentially mortality and morbidity (when available) to statistically establish a probability of causation. This method is called epidemiological surveillance. Alternative to this approach is the translation of animal toxicities from experimentation with laboratory animals. As yet, however, conclusions drawn

from animal studies reflect a certain degree of conjecture due to such factors as size and morphological differences.

Epidemiological studies rely on a variety of sources of population data when available. Records of mortality and morbidity are an essential component of many of these studies. Numerous potential sources of these may exist. For example, typical data sources of vital statistics utilized in the developed countries include death certificates, birth certificates, and census information while morbidity data are found in hospital records, records of private physicians, disease registers, and a variety of morbidity surveys performed from local to national levels. These are used to monitor the health status of a population, and their applications may be further utilized to maintain surveillance over the health status of a population or in the planning of programs for disease control.

As stated by the World Health Organization (1975): "There can be no doubt that the need for surveillance is becoming increasingly urgent as more and more potentially harmful chemical and physical hazards are introduced into the environment— into the air, water, and soil and into the food chain and pharmaceutical products— by the accelerating growth of industrial technology."

In that same document the goals of epidemiologic surveillance schemes are stated to include the provision of information for the protection and improvement of the health of populations in the following three ways: reducing exposure to known harmful factors; detecting and preventing exposure to new and potentially harmful factors; and testing the effectiveness of alternative environmental control programs.

For planning purposes, epidemiological surveillance is extremely valuable as a means of applying existing knowledge to the control of disease and disability. However, epidemiological surveillance is costly and the World Health Organization (1975) recommends that priorities must be established to limit the number of surveillance programs where manpower and resources are limited. Factors contributing to such decisions include: severity of the health effect, degree of exposure and age groups affected, persistence of the causal agent in the environment, degree of urgency expressed by the population for surveillance, feasibility of surveillance, likelihood of early intervention, and the possibility of utilizing pre-existing environmental and health data as well as pre-existing health care organizations, personnel, facilities and equipment in the surveillance process.

Surveillance strategies are customarily classified as being of two types. The first strategy begins with a substance or phenomenon suspected of perpetrating one or many adverse health effects. This approach attempts to establish the effects of the suspected factor. The second strategy begins with an existing adverse health condition in a population and attempts to discover which environmental hazards may be causal. In both strategies the eventual goal is to provide appropriate methods of intervention. The actual practical application of surveillance is often a somewhat less clearly defined compromise between the two strategies.

Epidemiological surveillance programs are most typically prospective cohort studies. In essence, these involve the identification of a specific population at risk and the accumulation and evaluation of both health and environmental monitoring data applicable to that population over a certain number of years. These studies have been found to provide the most reliable indications of incidence and relative risk. However, as is well known, they are extremely costly, often require many years of observation, and may produce ethical conflicts. For example, in studying the risk of cancer from a

particularly environmental pollutant, the investigator may withhold protection of the exposed group to obtain accurate results, at the same time possibly contributing to the production of cancer in those individuals. Additionally, in order to observe carcinogenicity, the study must continue for many years since the latency period of certain cancers is approximately twenty years or more. The cost, in money and time, of such a program would clearly be enormous.

For the above reasons, retrospective cohort studies are often performed for high risk, long-term hazards. These, of course, presuppose the existence of adequate data sources. If the data are available these studies are much less costly and do not require premeditated exposure of a population group to a potentially toxic or infectious substance.

Cross-sectional studies may also be useful and may be related to either prospective or retrospective data for comparison at a given point in time. The sources of bias in all of the above study techniques with respect to data collection, handling, and interpretation are known to be significant.

A primary consideration in an environmental epidemiology study or program is the establishment and maintenance of adequate environmental monitoring programs. Attendant to this requirement are numerous constraints that shall be considered here. Nevertheless, these constraints are not intended to invalidate existing methods and results, but rather to suggest a critical evaluation of past studies and to emphasize the benefits associated with the development of an extensive environmental monitoring program for the maintenance of health in a population.

Measurement of actual levels of a given pollutant may be compounded by the use of equipment of varying levels of accuracy. These levels may be compared and the differences taken to indicate environmental variability as opposed to variability in instrumentation. Furthermore, existing technology may not possess the capacity to measure certain pollutant levels accurately. In addition, pollutants themselves may exhibit certain properties that confound measured results. For example, certain pesticides have been found to adsorb to particulate matter in aquatic systems thereby preventing accurate detection of their levels. A great deal of information on the behavior of pollutants in the environment is still unknown. Often it is difficult to determine whether variable results are due to instrumentation or the natural periodicities exhibited by many substances.

The relationship of environmental levels to the actual exposure of individuals is critical to the surveillance process. However, the difficulties involved in the assessment of this relationship are great. For example, determination of the exposure of a population to DDT must include levels in air, water, and food encountered by individuals whose intake levels may vary. Additionally, levels of DDT in each of these media may vary. It is clear that measurement of these levels must be approximated based on average intake and exposure levels.

In determination of the actual effect of a substance on living material a primary consideration is that often there is a lack of knowledge of which effects are sought. These effects are often masked by a variety of confounding variables such as: biologic adaptation and resistance, sensitization, rare effects, and multiple effects produced by the same substance. Additional factors in populations, such as mobility, competing risks and the existence of high risk individuals must be considered.

For the developing country the opportunity exists to learn from the mistakes and shortcomings of other epidemiological programs for the assessment

of environmental health. Environmental monitoring, with an understanding of its shortcomings, is stressed as a key factor, along with the establishment of health records. The purposes of environmental monitoring are numerous, including the regular and continuous maintenance of control systems, the provision of a warning mechanism should levels become excessively high, the provision of periodic checks on efficiency and effectiveness of the control technology and on emission levels, long and short term environmental planning, and the establishment of records of trends in environmental levels.

Assessment material presented in this chapter does not attempt to be totally comprehensive, because assessment and planning sections are also included in appropriate topical chapters to follow.

References

Anderson, R.T. Comprehensive Planning for Environmental Health. Ithaca, N. Y.: Cornell Univ., 1964

"Environmental health in community growth." American Journal of Public Health 53(5): 802-822 (May 1963).

Karlin, B. The State of the Art of Delivering Low Cost Health Services In Less Developed Countries: A Summary Study of 180 Health Projects. APHA. Washington, D.C. GPO, 1977.

Logan, J.A., Oppermann, P., and Tucker, N.E. Environmental Engineering and Metropolitan Planning. Evanston, Ill,: Northwestern University Press, 1962.

Pisharoti, K.A. Guide to the Integration of Health Education in Environmental Health Programmes. Geneva: World Health Organization, 1975.

Schaefer, M. Administration of Environmental Health Programs. A Systems View. Geneva: World Health Organization, 1974.

U. S. Bureau of States Services, U. S. Public Health Service. Urban Planning for Environmental Health: A Course Manual. Washington, D.C.: GPO, 1962.

U. S. Department of Health, Education and Welfare, Public Health Service—Environmental Health Planning. US PHS Pub. No. 2120 Washington, D.C. GPO, 1971.

USEPA. Managing the Environment. Office of Research and Development. Washington, D.C.: GPO, 1973.

World Health Organization. Environmental Health Aspects of Metropolitan Planning and Development. (Report Series No. 297). Geneva, 1965.

World Health Organization. Epidemiological Surveillance of Long-Term Health Effects of Environmental Hazards, Report on a Working Group, Regional Office for Europe, Copenhagen, 1975.

World Health Organization. Recent Advances in Assessment of the Health Effects of Environmental Pollution, International Symposium. Paris, 1974.

CHAPTER THREE

PRINCIPLES OF ENVIRONMENTAL HEALTH PLANNING

Planning is defined by Schaefer (1974) as an "orderly process of defining a problem through analysis, identifying the unmet needs and demands that constitute the problem, establishing realistic and feasible goals, deciding on their priority, surveying the resources needed to achieve them, and projecting administrative action based on the weighing of alternative intervention strategies for solving the problem."

Environmental health planning is often carried out by the same people who will administer the new program. It will often be desirable to call upon outside technical consultants for advice during assessment and during the planning process. At the outset, planners should become familiar with planning being done by other agencies and organizations within the government. This is particularly important in the case of economic growth and development. Through close coordination and cooperation with related planning agencies, an environmental health planner can obtain much information needed for his own planning, and expert technical advice. In addition, he can sensitize these planners to environmental health issues and long range health consequences of proposed projects.

Since systematic planning is simply a formalized and documented reasoning process, it is possible to identify certain logical principles which are adaptable to most planning situations, including environmental health program planning. Employment of these principles by an environmental health planner should result in programs which are realistic reponses to current problems and which lend themselves to acceptance by governmental decision makers, fund appropriating bodies, and the general public.

The following paragraphs set forth a suggested program planning procedure embodying these logical principles. Although presented in a step-by-step fashion, the sequence of steps may vary in some situations, and some of the steps will occur more or less simultaneously. In brief, the steps are: examine situation; set objectives and consider alternatives; design program; implement program; evaluation program. Exhibit 1 provides a schematic presentation of these steps in a basic planning model.

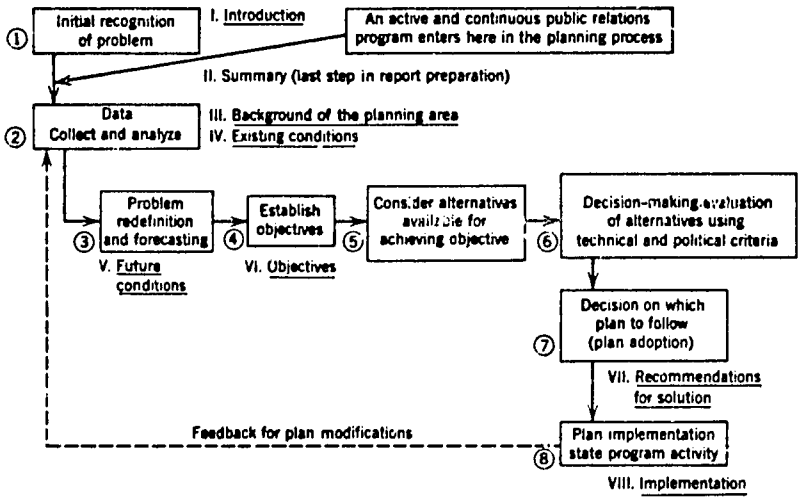

Basic planning model. (From Richard O. Toftner. Developing a State Solid Waste Management Plan, U.S. Public Health Service Pub. No. 2031, Dept. of HEW, Washington, D.C., 1970.)
The first step (1) in the planning process is awareness that a problem exists and needs to be solved. The second step (2) is to collect and analyze data relating to the problem. Such analysis makes possible a redefinition of the problem and a forecasting of future situation (3). Problem definition for both the present and future situation helps to suggest objectives (4) that if achieved would serve to solve the problems. Two or more alternatives (5) might be available for solving the problem and achieving objectives. The feasible alternative or alternatives (6) are selected by considering technical, political, social, and other factors. Once this decision has been made a plan for solution of the problems (7) can be adopted. Actual action for carrying out the plan (8) then follows. Effectiveness of the plan is measured during its implementation. These data are fed back into the continuing planning process to guide plan modifications if needed.

Before developing a new environmental health program or modifying an on-going one, it is necessary to acquire as complete a picture as possible of prevailing and projected conditions which have a bearing on the program. The planner needs to know the nature and size of the problem, the status of current control efforts, and the status of related environmental health problems and present and planned control activities. Present and projected resources available for a new or modified program must be determined. The population to be served as revealed by health status data, income data, and other demographic information must be learned. Economic status and trends of the area, including plans for development, are important. Physical nature of the area, i.e. geography, weather, man-made features such as industries, highways, public utilities and housing must be considered. Other situational factors which may affect an attack on the problem, i.e., political constraints, state-of-the-art in control methodology and technology, sociocultural demands, economic feasibility and long range planning cannot be ignored.

Sources of Data

Of the many kinds of data desirable for program planning, the most essential are those which enable a clear delineation of the health problems. Even planners with few resources should not proceed until they have adequate mortality data, morbidity data, data on environmental quality, and knowledge of conditioning factors (e.g., the susceptibility of populations in terms of age structure and nutritional status as well as knowledge of pertinent health and

and economic development policies). These data are critical for the definition of the problem so that it can be compared in size, severity and need with similar problems elsewhere. These data are also important for the quantification of the problem so that program progress can be measured. It is not always possible to satisfactorily describe the ultimate health problem. It may be necessary to deal with factors which contribute to the ultimate problem.

Once obtained, data require analyzing before they can serve the purposes of the program planner. They must be rearranged, combined, summarized, and interpreted. The data required and suggested strategies for analyses will be presented for each of the major environmental health subsystems in subsequent sections.

Certainly thorough statistical analyses of the health problem, resources and economic ramifications, etc., make subsequent planning decisions easier and result in sounder programs. However, nonstatistical information which does not lend itself to precise analysis is also an important factor in planning. Information regarding the economic and political influences that are part of the implementation and appropriation decision making process should be carefully considered. Additionally, sociocultural information related to the peoples' attitudes and behavior toward the health problems and the means they use to cope with that problem should be considered in the assessment and analysis process. Detailed and accurate information of this nature will be required if effective planning and implementation are to take place.

Objectives

Once the problem and other aspects of the situation have been clearly determined it is possible to establish what a control program can and should do. This may be stated in the form of a mission such as: "To restrict air pollution to a level that is not detrimental to human health and well-being." Much more essential and meaningful, however, is establishment of objectives which set forth specific accomplishments, within definite time periods, necessary for a successful program, both short range (within the next year or two) and long range (over at least five years). They should be consistent with overall objectives established by the agency which is to operate the program.

While setting objectives is described as a separate phase of planning, preceding program design, objectives actually are developed simultaneously with program design since it is unrealistic to attempt to set objectives without at the same time considering the general means by which they will be achieved. Wherever possible, objectives are stated in terms of ultimate effect on human beings. However, because a cause-and-effect relationship between program effort and health and well-being is often impossible to establish with our present state of knowledge, it is often necessary to establish objectives directed to problems which we assume to have an adverse effect on man. Thus objectives may be addressed to changes in environmental hazard levels, or in the behavior of polluters. An objective in occupational health might be to reduce asbestos dust levels to a certain applicable standard in a certain percentage of the asbestos-using industries in the state or locality by a certain year, whereas a more meaningful objective would be to reduce the incidence of asbestosis among industrial workers by a certain percentage within a specified time. In some cases, objectives are directed only to maintaining the status quo and thus are stated in terms of the prevention of the worsening of a problem during a specified time.

The importance of constructing objectives which describe specific accomplishments within a specified time cannot be overemphasized. It must be possible later to clearly determine whether or not they were accomplished.

It will facilitate program design if the objectives are ranked in priority order so that scaled-down alternative program approaches can be more readily constructed. Initial objectives will be fairly broad and few in number. While the program is being designed and even during initial operation, it is useful, in addition, to identify "action steps" which set forth shorter-term, more detailed program accomplishments necessary for attainment of the objectives. An action step is related to the program means, or activity while the objective speaks only of ends. An action step may involve a single activity, like training, which leads to accomplishment of an overall objective. (For example, an occupational health program action step might be to train a specified number of industrial employees in dust control techniques by a certain time.) Many program activities and consequently many action steps may be necessary for achievement of one objective. Identification of essential action steps helps guide program design by establishing requirements for certain kinds of program activities operating at a specified level and requiring specific resources. It will also facilitate evaluation of progress.

Program Design

The next procedure is to conceive and describe an integrated set of activities, procedures, and resources which make attainment of the objectives possible. This may involve conceiving and describing a completely new program or a modified version of an existing program. Objectives should be proposed to cover a period of at least five years: the program should be projected to cover the same period. While the program's general content responds to the objectives and action steps, details of its design are worked out with experienced program administrators versed in up-to-date control methodologies and knowledgeable in technical aspects of program operation. The program should be compatible with related ongoing activities and programs to minimize duplication, gaps or competition and to foster cooperation and coordination. It should be consistent with the policies and guidelines already established or understood. The program should be described in detail, with its requirements in manpower, money, facilities, and equipment clearly estimated.

There is usually more than one reasonable program design for meeting established objectives. Therefore, alternative programs should be designed. These may vary much or little with respect to activities, procedures, or organizational arrangements. Some may be highly innovative and others more conservative. Resource requirements should be worked out completely for each so that cost comparisons can be made. (For example, the objectives might be achieved by a program in injury control that included little more than public information, as opposed to an alternative which included development and promulgation of safety standards and training.) For each alternative there should be at least one variation which assumes a reduced scale of operation, and a lower requirement in funds and staff. This would represent a "fallback" alternative if sufficient funds for optimum operation do not become available. The lower scale version is based on dropping or scaling down some objectives or scheduling them for a later date in accordance with priority ranking.

Once alternative approaches are established it is necessary to provide a basis for choosing between them. The description of each alternative should include estimates of the total requirements in money, manpower, and other resources for each year up to at least five years. Thus, it is easy to compare relative costs of the various alternatives. Estimating relative effectiveness of alternatives, however, is a different matter. Here the same difficulty is in identifying the problem and establishing the objective, and of program effectiveness? Ideally it is the impact the program might have on the health and wellbeing of man. In some cases, present knowledge does not permit accurate determination of the effect on man and the measurement or prediction of the impact of an environmental health program on human health and wellbeing. To determine effectiveness, often the same measures employed in establishing the objectives are used. The question to answer is: Which alternative program approach will best meet the objectives for the least cost? Considerations of effectiveness, economic costs versus health benefits and maintaining equity are also important.

Predictions of the future effect of a program may be imprecise. However, if the same basic assumptions are employed in estimating the impact of each alternative, even though the assumptions may not be entirely valid, the resulting estimates should provide a valid base for determining the relative effectiveness of alternatives. Once a program is under way, adjustments are always necessary to allow for errors in the original planning assumptions. The assumptions involved will cover such matters as individual work output, changes in the nature of the problem with time, and susceptibility of the problem to control techniques. Where there is a basis in experience with similar ongoing programs or pilot projects, assumptions are more reliable since at least some factors, such as work output, have been measured already.

Once reasonable effort has been made to determine relative costs and effectiveness of the alternatives, it is sometimes possible to rank the alternatives in order of potential cost effectiveness, in order of economic costs versus health benefits, and in terms of number and type of people served as an assessment of equity or distribution of social justice. Often there are a number of choices that are equally optimal. The planner has conceived his objectives and designed his program alternatives with full awareness of constraints. He must now confront those constraints as final limiting factors. He must identify the alternatives that embody the highest potential effectiveness for the money and which at the same time are feasible. The optimum alternative in potential cost effectiveness may, all constraints considered, not be reasonably feasible. The alternatives chosen may represent a compromise between what theoretically is most desirable and what is attainable. Estimates concerning future availability of funds usually are a principal limiting factor. Since alternative funding and staffing have been worked out for each alternative, it is possible to recommend a fairly optimistic funding level, knowing that if that level is not realized it is possible to fall back to an alternative which provides for scaled down operation adjusted in terms of current priorities.

The plan may be formulated at different levels. At the local level there may be a maximum and minimum plan. A regional plan may be formulated through the integration of local plans. A national plan may be based on the integration of regional plans. The plan is often a compromise among three elements: the community, whose health need priorities will have to be established; the political structure, as decisions have to be made on allocations working within the limits of available resources; the health planner, who has the possibility of introducing rationality in terms of health policy and possible alternatives.

The final proposal should consist of a written document describing the problem and the situation, setting forth objectives and action steps, describing the recommended program approach, comparing cost effectiveness, and describing other factors that helped determine selection of the recommended approach. Since it must inform and persuade people with all kinds of backgrounds, it should be written in clear, nontechnical language.

Once a plan has been drawn up and formulated, it must be discussed so that all those who will be involved will have a say and an input in any possible modification before the final decision is taken for implementation. This decision must take into account many nontechnical factors which are political, psychological, and sociocultural.

It is important to note that this involvement is more than informative in value. To the extent to which those responsible for the implementation of a plan and its progress have participated in the plan preparation, there will be greater agreement as to the degree of implementation and satisfaction with the program. The plan should also be discussed with those who will be responsible for coordination of this plan with those for other sectors. It may be that the original plan will have to be revised to achieve greater support and ultimate success. It must be noted that the probability of implementing a plan will be higher if those responsible for finance have participated in the preparation or preliminary discussion of the plan.

When coordination of a plan is complete, the plan is typically submitted for consideration to the Minister of Health, the Minister of Finance, and the Cabinet or Council of Ministers. The final decisions are in the hands of the politicians who have the legislative and executive responsibility. For this reason and others documented in earlier sections of this manual, the health administration of a country should participate in the overall national development planning.

Program Implementation

The implementation of an approved plan will depend on the quality of the administration and the translation of the plan into an actual operating program. Precise actions required for implementation vary with the kind of program. Some of these strategic actions will be discussed in sections dealing with the environmental subsystems. Certain factors must commonly be considered: new legislation to authorize a new program or major modifications in an old one may be necessary, regulations, standards, and guidelines to be promulgated through the programs may have to be prepared. Arrangements must always be made for necessary short and long term financial support. This is often one of the most unpredictable of situational variables. If possible, the planner should provide in advance for an optimum plan and a "fall back" plan based on different scales of operation in the event of less than desirable appropriations.

Organizational arrangements are made either by establishment of a new organization or modification of an existing one. Staff must be recruited, selected, and oriented. Manpower shortages can frustrate the best laid plans. During program design, general availability of requisite manpower is considered in connection with determining feasibility. When severe manpower shortages are anticipated or materialize during implementation, it is necessary to initiate the program on a limited basis, employing a skeleton staff, until arrangements are made to reduce the shortage. Recruitment and hiring of staff usually is based on the existing system of the governmental agency which is to operate the program. However, the program manager can do much to facilitate meeting manpower needs. He may arrange for reclassification of unfilled positions to achieve higher salary authorizations needed to attract appropriately skilled

applicants. He may review manpower needs and arrange for employment of individuals with lesser training to perform functions traditionally performed by more highly trained manpower. He may upgrade skills of available manpower through on-the-job and short term training sponsored by the agency, and by sending employees to universities for study in appropriate subject areas.

Descriptions of the program should be disseminated to program leadership at each relevant level and detailed operating procedures should be developed to facilitate execution of procedures and activities. Most actions required in implementation are carried out in accordance with established procedures of the agency which is to administer the program.

One action which is not usually covered by an agency's standard procedures, but which is often of great significance to implementation, consists of obtaining the support of influential groups who have a natural interest in the proposed program. Particularly critical is support at the community level. Depending on the program, this might also include professional associations, civic organizations like mothers clubs, government agencies, and industrial groups. Obtaining such support is facilitated if the planner has consulted these groups during planning and has accommodated as many of their suggestions as program consistency and effectiveness will permit. Some influential groups may be opposed to any program which, in order to cope with the problem, involves inconvenience or added costs to them. The program implementer must be especially diligent in trying to involve these groups in the planning process and he may have to seek support from other groups to offset this opposition.

Program Evaluation

Program planning is not a one time affair. It provides a sound basis for initiation of new programs. Once a program is under way it must be continuously monitored and evaluated so that adjustments can be made to compensate for situation changes, errors in estimates and assumptions, and spontaneous changes in program operation. Every effort must be made to ensure that the program remains relevant and effective. While the program manager is interested in the administrative efficiency of the program, the planner is primarily concerned with overall effectiveness. To make continuous monitoring and evaluation possible it is necessary to arrange for the regular gathering and analysis of information regarding the problem, program impact, and program progress. This requires regular data reporting from participants in the program as well as from other sources. Continuous monitoring enables early detection of program deficiencies and permits timely adjustments on an ongoing basis.

The wisdom of establishing specific and measurable objectives and action steps becomes more apparent when the planner attempts to employ them as the test of program effectiveness. Objectives are concerned with program impact on the problem measured in changes for the better such as reduction in morbidity, accident rate, vector population, pollution level, or increase in rate of compliance with standards and— where possible— improvement in health status. Action steps should refer to activities leading to the objective such as number of inspections, reports, and persons trained. They permit shorter term indication of program progress. Completion of action steps, while a good indication of program progress, should not be confused with program effectiveness, which is measured only by changes to which the objectives are addressed. Regular monitoring and evaluation of the program is augmented by periodic in-depth reviews and analyses, similar to the original planning process. Once every year or two, the problem and other situational factors should be examined anew and new alternative approaches should be considered and compared. The selected

alternative may consist of the existing program, a variation on that program, or an entirely different program approach. It must, however, take into account the ongoing program. It is conceivable that, due to changed circumstances, planners may recommend termination of a program when the program seems to show no promise or when the problem has diminished to such a point that expenditure of further resources is not warranted. The assessment of effectiveness is only part of the evaluation procedure. A vital component of evaluation is the feedback mechanism by which the results of evaluation are fed back into the planning process at various levels.

CHAPTER FOUR

PRINCIPLES OF ENVIRONMENTAL HEALTH SECTOR EVALUATION

Evaluation consists of finding out the extent to which a set of program objectives has been attained, what unexpected consequences have resulted, and the general quality of a program. The evaluation process contains several general steps which are applied in different strengths depending on the purposes and focus of the evaluation. The general steps are outlined in this chapter along with germane issues to be considered at each step. Specific criterion to be applied and tests to be used in the evaluation process are defined by the objectives of an evaluation and can be found in the specific chapters describing environmental subsystems.

An evaluation follows the basic outline presented below.

Preliminaries:

- Review the history and development of the program or activity under evaluation. This should be done at an official and unofficial level. It should include determination of the reasons for the evaluation.
- Select an individual, agency, or group to do the evaluation. This person or group should not be integrally involved in the program, but independent.
- Introduce the evaluator (group or individual) to the history of the project and some key administrators or managers. An attempt should be made to create an air of cooperation here rather than fear or apprehension which might interfere with the accuracy and efficiency of the evaluation.

Define objectives:

- Identify the original objectives of the activity or program and any subsequent modifications. Obtain this information from the administrators who designed the program as well as those involved in implementation.
- Identify criterion by which the program is supposed to be and expected to be evaluated. Obtain this information from administrators and review it, if possible, with the implementers.
- Identify possible unexpected or implied objectives as well as unforeseen consequences which could be found.
- Objectives and criterion will be identified related to several subsystems within a program.
- Environmental objectives attend to changes in the environment which may have affected the outcomes of a program and the probability of meeting objectives, e.g., weather, migratory patterns of people or animals, changes in economy or social activities.
- Time objectives concern when activities were accomplished and what future time objectives have been set.

- Cost objectives include unforeseen events that may have affected costs. Financing practices and social or cultural needs that may affect payment or financing are considered.
- Personnel objectives include: anticipated training, self-sufficiency of personnel, personnel satisfaction, personnel morale, and personnel usage.
- Usage objectives include: attitudes toward program held by the intended users or people to benefit from it, problems associated with use, extent and frequency of use, beliefs about the program held by the people, and unforeseen consequences.

Select measuring instruments:

- Quantitative, operation or physical tests should be relevant and fair. These should be administered with the cooperation of those involved in the project.
- Qualitative or evaluative tests will involve general impressions of elements like the morale of personnel, efficiency of operations, attitudes of users, lines of authority, etc. Although these can also be assessed with surveys, informal conversations and observations also provide worthwhile input.
- The validity, reliability, objectivity and relevance of each measurement instrument should be considered before and after it is used. Validity is the degree of accuracy with which the instrument measures what it is constructed to measure. Reliability is the consistency with which an instrument measures a given variable. Objectivity is the degree of concordance between the judgments of independent and competent examiners as to what constitutes a good answer to each of the elements of a measuring instrument. Relevance is the extent to which the criteria established for selecting questions so that they conform to the aims of the measuring instrument are respected.

Interpret measurement data: Discuss the evaluation purpose and methods with operators and managers of those programs being evaluated. They will offer insight and information that aids in data analysis and interpretation. Possible program alterations and bottlenecks may also be identified.

Make judgments based on the evaluation process and take appropriate action. One necessary appropriate action is to provide feedback both official and unofficial to those whose programs or personal activities were evaluated. This helps to identify the most effective and suitable future actions and creates a stronger feeling of cooperation.

This outline offers the fundamental steps involved in any evaluation. Such an evaluation might come after an assessment and before planning occurs, after a program has been planned, or after its implementation. Information regarding the specific objectives to be set, criterion to use, instruments to select, interpretations that are possible and judgments to be made are presented in subsequent sections which provide these details for each environmental subsystem.

CHAPTER FIVE

DRINKING WATER

Water supply systems vary greatly in size, ranging from small systems serving individual families to systems serving millions of consumers. The surveillance of drinking water quality has been defined as "The continuous and vigilant public health assessment and overview of the safety and acceptability of drinking water supplies." (WHO, 1976) The applications of this definition in rural and urban areas are very different and will be discussed in separate sections of this chapter. The first section, Assessment of Urban Water Supply, reflects many of the recommendations of the World Health Organization for surveillance procedures applicable to developing countries. (WHO, Surveillance of Drinking-Water Quality Geneva: World Health Organization Monograph Series No. 63, 1976.)

Assessment of Urban Water Supply

The elements of a surveillance program include careful and critical examination of the following:

- quality of source
- output of source
- protection of source
- adequacy and reliability of treatment (if any)
- distribution system (quality, pressure, and continuity) (if any)
- quality control (records, sampling, tests)
- cross-connection and back-siphonage control (if any)
- chlorine residual in the distribution system (where appropriate) (if any)
- construction and repair practices (including disinfection before services are resumed)
- maintenance procedures
- standard of operation

Necessary surveillance programs differ as a function of level of economic development, government priorities, personnel capabilities, natural resources, water needs and uses, fiscal capability, etc. Pragmatic surveillance programs should be planned to adapt to local existing situations and economic resources. Once such programs are implemented and consolidated, plans to develop by stages to the ultimately desired level of treatment, distribution, and surveillance should be made.

Surveillance

In choosing the systems to be included in a routine surveillance program, the practice of one health agency may be used as an illustration. This agency, in a state with a population of about 5.5 million, has defined a community water supply as "any system, publicly or privately owned, which provides water intended for drinking to 25 or more persons." Over a period of several years

the agency has identified and listed some 3000 such systems and it inspects each system periodically. The agency is now planning to redefine community water supply systems as "those systems serving 10 or more consumers," and is expanding its staff and laboratories to supervise an additional 1000 systems.

What is worth noting is not the number of consumers specified in the definition, whether 10, 25, 100, or 1000, but, rather, the selection of an interim number, which represent a realistic interim goal, and the stepwise movement, with development of staff and laboratory capacity, to a more stringent definition of a community water supply system.

Essential to these decisions is the availability of an inventory or list of water supply systems. The number and size distribution of the small systems must in general be estimates. Only when staff resources become available to search for small systems in the field will many of them be identified. In addition to water systems serving resident populations, systems for restaurants, hotels, parks, sea ports, airports, railway stations, fairs, centers of pilgrimage, festivals, military camps, and other concentrations of transient populations should receive particular attention because of their potential role in widespread disease transmission.

In carrying out a survey of water systems, other highly useful information can be gathered at marginal cost. In cities this includes such data as water consumption (where records exist), water sources, laboratories, future needs, and planned expansions.

For the purposes of assessment of surveillance activities the following should be investigated: (1) survey procedure and purpose, (2) timing and frequency, (3) qualifications of personnel.

The sanitary survey is an on-site inspection and evaluation by a qualified person of all conditions, devices, and practices in the water supply system that pose, or could pose, a danger to the health and well being of the consumer. Sanitary surveys may include the entire water supply system or they may be confined to source, treatment, or distribution, depending on their purpose.

Printed guidelines, checklists and forms for recording sanitary surveys are of considerable value. Report forms should be drawn up in the national language, mimeographed and used on a regular basis. In addition to their educational value as checklists, such forms become part of a permanent record and are useful for enforcement of quality standards and follow up evaluations of connections made. (An example of a sanitary survey reporting form is presented in Annex A.)

Sanitary surveys should be undertaken both on a regular basis and also under special conditions. The comprehensiveness of the survey and the necessary qualifications of the surveyor are determined largely by the significance of the particular survey.

The most important survey is that undertaken when new sources of water are being developed. This survey should be made in sufficient detail to determine (1) the suitability of the source, and (2) the amount of treatment required before the raw water can be considered suitable for human consumption. When alternative water sources are under consideration each should be surveyed. Physical, bacteriological, and chemical analyses should be carried out during surveys to find major new surface water supplies. Requirements for chemical and bacteriological analyses of raw water sources will depend on the resources available. The guiding principle is that no new public water supply should be approved without a sanitary survey made, or accepted, by an agency with surveillance responsibility.

Another important and urgent survey is that undertaken when laboratory analysis or complaints from consumers indicate the possibility of contamination. A survey should be started immediately to identify the source of possible contamination. Attention should be given first to the most common causes of contamination. In systems using chlorination treatment, residual chlorine levels should be checked immediately and chlorination equipment and records examined.

Even more urgent is a sanitary survey when epidemiological evidence indicates an outbreak of water-borne disease in or near the area served by the water supply system. This should be undertaken even though laboratory records indicate water is of a satisfactory quality. Contamination of water supplies is often sporadic and undetected by intermittent sampling. In addition there are always the possibilities of errors in sampling or laboratory procedure. During epidemics the sanitary survey should not be limited to the piped public water supply but should be extended to all water sources in the community.

A sanitary survey should be made when any significant change or event occurs that could affect water quality; for example, the beginning of the rainy season, new industrial construction work on a watershed, an outbreak of typhoid or cholera in a nearby area or country, or serious complaints by consumers.

Personnel

The professional judgment and competence of the survey officer ultimately determine the reliability of the data and information collected. Qualified persons should therefore conduct the sanitary surveys. Ideally, the sanitary surveyor should combine an understanding of water supply technology and the principles of public health with experience in water supply operations and management. At least the national, state, and provincial program directors should possess these qualifications and should have received formal training in sanitary engineering or sanitary science.

The lack of adequate numbers of qualified personnel should be seen not as an excuse for inaction, but as a challenge to establish appropriate training programs. Technical assistance and fellowships are available through WHO and other international bodies.

The performance of the sanitary surveyor should be monitored through occasional spot checks by supervisors. Also, many agencies find that rotation of assignments among the sanitary personnel helps to prevent complacency or worse faults due to overfamiliarity with particular waterworks or their personnel. In smaller water supply systems, additional operator training may be required through short courses or certification programs. A senior waterworks official could accompany the sanitary survey officer during his inspection, not only to remedy any defects uncovered but also because the survey should be considered as a training session.

For all systems, regardless of size, a person must be designated to be responsible for the operation of the system; this person, or his deputy, must be available ("on call") at all times when a system using surface water sources and disinfection procedures is in operation. The principal operators of systems employing chlorination must have on hand devices or equipment for measuring residual chlorine and be competent in their use and in making indicated adjustments to chlorine dosing rates.

Common Surveillance Problems

The World Health Organization (1976) recently engaged in a multi-country survey of common surveillance failures. Many of these reflected lack of capital and humam resources, but some were compounded by complacency and apathy on the part of water supply and surveillance authorities. The reported common failures are presented below for the purposes of assessing effective surveillance:

- Failure to assure general awareness of the danger of outbreaks of water-borne disease and/or to bring such outbreaks to the attention of water purveyors.
- Lack of established surveillance policies and procedures.
- Failure to make sanitary surveys.
- Failure to collect samples of raw and delivered water.
- Failure to enforce correction of deficiencies and remedial measures.
- Failure of laboratories to notify waterworks of results of analyses.
- Inadequate approval program for new sources.
- Failure to adopt and enforce drinking-water standards.
- Failure to protect watershed, wells, and springs from surface contamination.
- Failure to maintain positive continuous hydraulic pressure throughout the distribution system.
- Failure to maintain a continuous chlorine residual in distribution systems.
- Inadequate or non-existent cross-connection and back-siphonage control programs.
- Lack of standard laboratory procedures.
- Failure to maintain plant records, e.g., residual chlorine levels.
- Failure to maintain surveillance records.
- Bacteriological samples taken from fixed locations unrepresentative of the distribution system.
- Failure to disinfect new construction and repair work.
- Lack of adequate legal authority.
- Inadequate budget and manpower.
- Inadequate numbers of personnel suitably trained and qualified.
- Inadequate laboratory facilities and support.
- Failure to promote adequate maintenance programs.

Sampling

Samples are taken from water systems in order to determine whether the water supply is safe for human consumption, and they must therefore be representative of the water supply as a whole. Assessment of sampling practices includes examination of the following: (1) record keeping, (2) sampling frequency and number, (3) location of sampling points, (4) sample collection procedures, (5) transportation of samples, (6) coordination with the laboratory, (7) analyses of water samples, and (8) laboratory practices and facilities, follow up of reports and the ability to have something corrected in the field.

Sampling frequency for public water supplies has traditionally been based on a monthly minimum determined by the population served, fewer bacteriological samples being required from smaller supplies. This practice recognizes the limited resources generally available for surveillance of smaller water supply systems. Even in developed countries the application of identical per capita surveillance budget provides smaller resources for the smaller systems. However, frequency of sampling should take into account the past frequency of unsatisfactory samples, the quality of raw water treated, the number of raw water sources, the adequacy of treatment and capacity of the treatment plant,

risks of contamination at the source and in the distribution system, the size and complexity of the distribution system, the risk of an epidemic starting (at international ports or centers of pilgrimage, for example), and the practice of chlorination.

It might be thought that if chlorination is practiced less sampling will be needed. However, field studies in developing countries indicate that water supplies from naturally protected sources— deep wells, for example— are rarely chlorinated. Rather, chlorination may be practiced in water supply systems where the source or distribution system is, or could be, contaminated and where failure of the chlorination system could result in a serious hazard to the health of the population served. However, in many developing countries chlorine is not available. Constant checking of chlorine residual concentrations, when applicable, and bacterial quality is therefore necessary to ensure that immediate remedial action is taken if water of doubtful quality enters the distribution system.

No universally applicable sampling frequency can be suggested. Recommendations for sampling (numbers of samples and frequency of sampling) are to be found in International Standards for Drinking Water (see reference section). Suggested maximum intervals between successive samples collected from the distribution system, whether the water has or has not been disinfected, and the minimum number of samples to be examined each month are given in the following table.

The number of samples taken and frequency must be decided based on local conditions. The standards for sampling and criteria adopted for local use should be clearly defined, printed and circulated to appropriate personnel, and attainable by water supply systems of the sizes and types specified.

Maximum Intervals Between Successive Samples of Water Entering the Distribution System and Minimum Number of Samples to be Taken

	Maximum Interval Between Successive Samples	Minimum Number of Samples to be Taken from Whole Distribution System Each Month
Less than 20,000	1 month	1 sample per 5,000 population per month
20,000 - 50,000	2 weeks	1 sample per 5,000 population per month
50,000 - 100,000	4 days	1 sample per 10,000 population per month
More than 100,000	1 day	1 sample per 10,000 population per month

Sampling should be rotated through all parts of the distribution system. A common practice, which may yield misleading results, is to collect samples always from the same point— typically from a laboratory tap in the municipal building, a police station, the residence of a waterworks employee, or a particular restaurant. The majority of samples for bacteriological examination

and chlorine residual determinations should be taken in known problem areas, for example, areas with a poor previous record, low pressure zones, areas with a high leakage rate, densely populated areas with inadequate sewerage, open or unprotected service reservoirs, dead-ends on pipelines, and areas on the periphery of the system farthest away from the treatment works.

The assessment of sampling procedures in urban areas should consider that many urban areas use water from several sources, ranging from three to 20 or more; water from each source should be periodically sampled. Sources serving larger populations, surface water sources, sources serving older distribution systems, and sources with known water quality problems should be more frequently sampled. In some cities tank trucks are used to distribute water. Watering stations where the trucks are filled should be periodically sampled and the water distributed from the trucks should be randomly sampled without warning given to the driver/purveyor. Trucks should be periodically cleaned and disinfected with chlorine at the watering station.

The WHO (1976) recommends that the following instructions be known and followed in sampling procedures by sample collectors.

- Identification of a sample with the date it was taken, the location, brief particulars of the source, and any special conditions. Standard forms are useful for this purpose.
- Location of sampling points, as described above. Subprofessional personnel should be specifically instructed about sampling sites.
- The use and purpose of dechlorinating compounds, such as sodium thiosulfate, added to the sampling bottle.
- Measurement of residual chlorine. These tests must be performed immediately when the sample is taken.
- Proper procedures for collecting samples to ensure that they are representative and that, for bacteriological examination, sampling bottles are kept in a sterile condition. "The collection of bacteriological samples is to be regarded as of the character of a surgical operation with the observance of similar aseptic precautions, and it should be carried out only by those who have been competently instructed." Where samples are repeatedly contaminated by collectors, a complacent attitude may develop with regard to samples positive for coliform bacteria.
- Proper transportation and storage of samples. Laboratory examination should be started within 24 hours of sampling. In hot climates, samples should if possible be kept cool and protected from exposure to heat or sunlight.

Numerous authoritative, detailed and comprehensive treatises on the physical, chemical, bacteriological, biological, and radiological examination of drinking-waters are readily available. There are also many excellent textbooks dealing with water analysis. However, two particular parameters or measures of quality are so vital to water quality surveillance as to warrant special attention; residual chlorine concentration, and number of coliform bacteria, which gives an index of possible contamination of the water by faecal matter. Residual chlorine concentration can be used as an indication of the ability of the treated nonturbid water to overcome bacterial contamination.

Where chlorine is added to the water the chlorine residual test is, under certain conditions, a useful method for operational quality control. The test is readily learned, quickly and easily performed, inexpensive, and provides an immediate warning of inadequately safeguarded water. The presence of a chlorine residual of adequate concentration for a sufficient length of time provides reasonable assurance that the water is rendered free from pathogenic

bacteria. Table 4 shows the residual chlorine concentrations necessary for effective disinfection. Two analytical tests for chlorine residuals are the ortho-tolidine/arsenite test (OTA), and the DPD method (N-diethyl-para-phenylenediamine). The OTA is most commonly used.

If chlorine residual testing is in use, when a residual concentration of less than the allowable minimum is measured at a sampling point, another sample should be taken immediately and the chlorine residual concentration measured. If this sample also proves unsatisfactory for residual chlorine the dosage of chlorine added to the water supply should be increased, the line flushed, and sampling continued until a satisfactory chlorine residual concentration is attained. If increasing the chlorine dosage is ineffective, or if excessive chlorination is required, a sanitary survey for potential contamination of the supply should be made at once by water supply personnel. If necessary, pipelines and storage reservoirs adjacent to the sampling point should be flushed, cleaned, and disinfected. In addition, waterworks having the laboratory capability should obtain a water sample for bacteriological examination. Should these measures prove inadequate, the surveillance agency should be asked for assistance and potentially affected consumers notified to boil all drinking water until the water supply is known to be safe.

Bacteriological Analysis

The traditional test for coliform bacteria is the multiple-tube fermentation test. A newer test using membrane filters is an acceptable alternative according to the World Health Organization. The membrane filter test is convenient for field use and has two principle advantages: rapidity and portability. Results are available in 24 hours in contrast to the 48-96 hours required for the standard fermentation-tube method. Membrane filter equipment for bacteriological examination of water is available in field kits from at least two manufacturers.

Minimum Chlorine Residual Concentrations Required for Effective Disinfection of Water

pH of Water	Free Residual Chlorine (mg litre) Minimum Contact Time of 10 min	Combined Residual Chlorine (mg litre) Minimum Contact Time of 60 min
6.0 - 7.0	0.2	1.0
7.0 - 8.0	0.2	1.5
8.0 - 9.0	0.4	1.8
9.0 - 10.0	0.8	not recommended
over 10.0	0.8 (with longer contact period)	not recommended

Source: WHO, 1976

Substitution of chlorine residual testing for bacteriological testing is permissible provided the following points are determined:

For samples in which chlorine residual determination is to be substituted for bacteriological examination, the number of samples needed, the frequency of sampling, and the location of sampling points;

The minimum concentration and type of chlorine residual to be maintained;

The analytical method to be used.

Laboratory tests needed to control treatment processes should be provided at all filter plants. The minimum requirements for tests include turbidity measurements, color determinations, flocculation characteristics (jar test), chlorine demand, and residual chlorine levels.

Tests for pH, alkalinity, and ammonia may be included among the basic tests in order that the effectiveness of coagulation, sedimentation, filtration, chlorination, and corrosion prevention may be determined. Rapid changes in these parameters and others such as chlorides, nitrates, or conductivity indicate possible pollution in the watershed, and a sanitary survey should be made and appropriate remedial action taken. Tests for iron and manganese are necessary when these substances are present in the raw water in sufficient concentrations to influence the treatment processes. Testing for flourides is necessary when flouridation is practiced.

Chemical Surveillance

Chemical surveillance of drinking water assumes greater importance as more raw water sources are exposed to municipal, industrial, and agricultural waste discharges. Water supply personnel should routinely perform chemical and physical tests for proper operational control (residual chlorine levels, pH determinations, turbidity measurements, etc.). However, many laboratories do not have either the personnel or facilities for making some of the important chemical analyses required. In such cases the surveillance agency should assume responsibility for sampling and analysis to ensure that water of satisfactory quality is delivered to consumers.

Complete chemical analysis should include analyses for toxic metals, pesticides, persistent organic chemcials, and radioactivity. In a well equipped laboratory with skilled personnel, chemical analysis of a single surface water sample could require four or more man-days in contrast to less than one man-day for bacteriological and physical analysis only. Where water supplies are obtained from sources with limited exposure to industrial and agricultural wastes, full analysis should be limited mainly to selected sources for large systems, and to occasional sampling.

Once a complete chemical laboratory analysis has been performed and evaluated, many systems may thereafter rely on portable comparators and test kits for determinations of aluminium residual chlorine, flouride, iron, manganese, phosphate and polyphosphate, alkalinity, calcium, hardness, pH, turbidity, and color. In this way manpower requirements per sample analyzed are reduced and the numbers of samples that can be analyzed, or systems surveyed, increased.

Water samples must reach the laboratory with the least delay, preferably within 24 hours. In many countries, sample collectors often do not have personal vehicles and special arrangements may have to be made for transporting of samples. Use of public carriers, buses and even trains, boats and aircraft) has been successful in some areas, but not where the sample collector has to pay the charges from his own pocket. Availability of transport for samples is a key factor in the location of regional laboratories.

There is an obvious need for coordination between sample collectors and laboratory personnel. Unfortunately, samples often are left at transportation points and remain there several days before being collected. In addition, samples may reach laboratories at weekends, when they are closed. A properly

coordinated schedule must be established for the shipment of samples and their receipt and examination by laboratory personnel.

Organizational Structure

The surveillance agency should provide the professional services to ensure that the health of the public is protected with regard to drinking water. Additional functions of surveillance agencies include training of water treatment plant chemists; provision of reference standards; certification of water treatment plant laboratories; resale of culture media and other imported supplies to waterworks; evaluation of the safety of waterworks materials and chemicals, e.g., coagulant aids.

Combining the water production and surveillance functions in a single agency is sometimes proposed. Examples exist especially in rural areas. The effectiveness of such arrangements is highly questionable. Experience indicates that the development of complacency is discouraged and greater awareness of the need for surveillance is promoted by the awareness that all activities, whether a financial audit or a sanitary survey are subject to external review. The standards of operations of large, complex, and well run city water supply firms having their own qualified staff can be so high that the surveillance duties of the health authorities can be reduced to a minimum. In such cases, the surveillance agency will be able to give more of its attention to supply systems with poorer internal surveillance. For example, in small rural or locally operated water systems unable to afford qualified managerial or technical personnel the surveillance provided by the central agency may be the only check on water quality. In areas without public water supplies the surveillance agency may be able to reduce grosser hazards of water-borne epidemics through advice and technical assistance.

There is no single pattern of effective organization that can be applied to surveillance operations. Administrative arrangements exist as a function of political structures, economic development, demographic patterns, level of water supply services and other variables that differ from country to country. The important criterion is whether the organization provides effective surveillance.

Several questions that should be asked in the assessment of surveillance agencies to determine their effectiveness follow.

- Is regular surveillance being provided?
- Does the agency have legal delegation of authority and responsibility?
- Does the agency have effective leadership?
- Are there clear lines of authority and review in the agency?
- Does the agency have legal enforcement powers? Are they effective?
- Does the agency have adequate resources?
- Does the agency report periodically to the government on the public health aspects of water supplies.?

The development or strengthening of a surveillance program would not await the creation of an ideal organizational structure. Too often new situations are met by reorganization which usually produces inefficiency and confusion while creating an illusion of progress.

Assessment: Rural Water Supply

Although there is a high degree of variability in the status of water supplies in rural areas, this section is directed to those where a large majority of people do not have a safe and sufficient access to drinking water. The requirements recommended by Rajagopalan (1974) for assessing the status of existing water supply in rural areas include the following: (1) an inventory

of communities within a country or region, (2) the establishment of problem or priority areas, and (3) a sanitary survey of existing supplies. These are discussed in the following section.

A survey and inventory of rural communities is useful in establishing local water use patterns and how they relate to other aspects of basic sanitation. These data may then be used to establish priorities for improvement. The factors to be included in such an inventory include the following: (1) details of the locations, (2) the degree of local community organization, (3) details of the existing water supply and source, (4) the nature and quality of all nearby water sources, (5) wastewater, solid waste, and excreta disposal facilities, (6) epidemiological data on the health status, incidence of disease, mortality and morbidity rates, and endemicity of cholera, (7) communication facilities, (8) degree of contact with mass media, and (9) other relevant local factors. (Rajagopalan, 1974)

Specific data on water supply should include the type of source, whether the source is protected, and where piped supplies exist, the adequacy of transmission, storage, and distribution. Once the preliminary data are collected, priorities should be established. High priorities may include slum and "fringe" areas of urban cities, and rural communities in waterborne-disease endemic areas, etc.

Following selection of priority areas, sanitary surveys of existing supplies should be performed. The purpose of these surveys is to determine defects or deficiencies in the system with respect to quality, quantity, and availability. Additionally, these should provide alternatives for improvement and maintenance of the system. The survey should also include an engineering evaluation of potential alternative sources of water.

The typical systems used in rural areas include wells such as step wells, dug wells, tube wells, and drilled wells; rivers, springs, ponds, and irrigation ditches. Rajagopalan (1974) has provided guidelines for use in identifying problems and appropriate solutions with common types of rural water supply and these will be discussed in the following section.

The nature of the construction of the step well easily facilitates contamination since users can step into the water. Helminthic diseases, such as dracontiasis are then easily spread through the water. Exhibit 1 illustrates a step well and the means for its pollution. Step wells should therefore be converted into draw wells by constructing a high parapet all round and an impervious apron. (Rajagopalan)

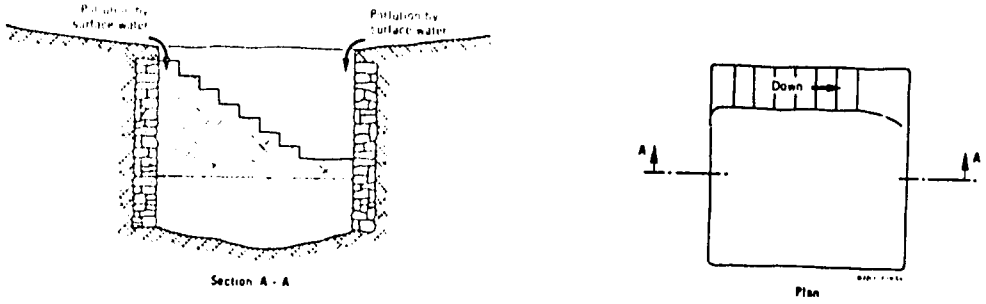

Exhibit 1: Insanitary step-well
Source: Rajagopalan & Shiffman

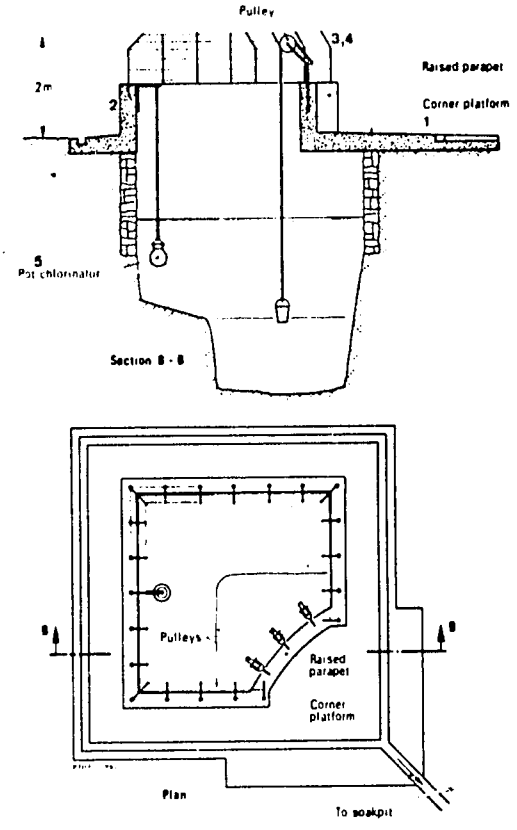

Check list

1. Is there an impervious apron to exclude surface water?
2. Is there a parapet to prevent users from entering the well?
3. Is step-well converted into draw or pumped well?
4. Are the ropes and buckets permanently installed?
5. Is the well water chlorinated?

Exhibit 2

When pulley and bucket arrangements are used, pulleys should be installed over a high parapet on the corner platform. Spill water is collected in a peripheral drain for disposal in a soakpit. The checklist at the bottom of Exhibit 2 provides pertinent questions in assessing the adequacy of the well. The yield of large step wells may be improved by deepening in those areas where local hydrogeological factors are favorable.

The construction and ultimate yield of a dug well is intimately related to soil type. Soft permeable soils allow for the construction of "sunk wells" which generally yield larger and more dependable supplies. Two types of dug wells, one with a pump and the other with a windlass are illustrated in Exhibits 3 and 4.

Factors to be considered in the sanitary maintenance of each are enumerated in the respective checklists. Additional improvements to dug wells

adapted to specific regions or soil types have been developed. (Rajagopalan, 1974) These include the use of weep holes and radial strainers to increase the yield in porous soils.

Exhibits 3 & 4

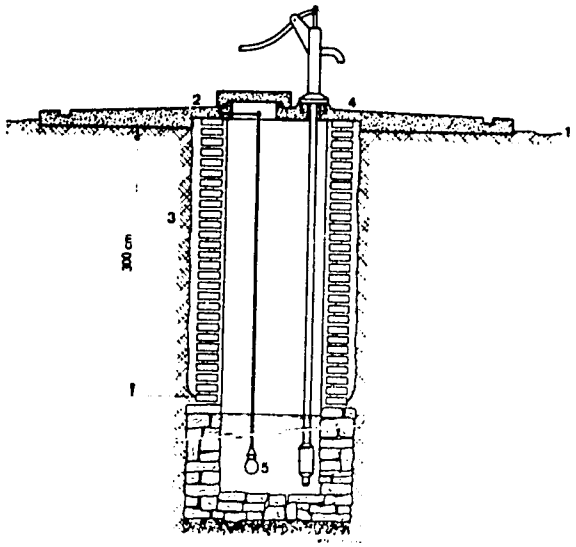

Check list

1. Is the nearby area free from liquid wastes and privies?
2. Is there an impervious apron to exclude surface water?
3. Are the sides of the well sealed watertight for 3 m below ground level?
4. Is the eduction pipe to pump sealed in apron at exit?
5. Is the well water chlorinated?

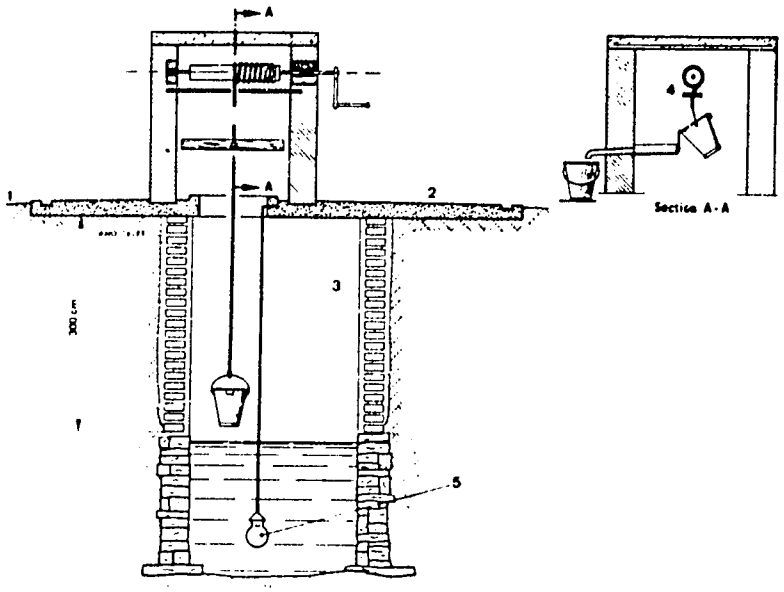

Check list

1. Is the nearby area free from liquid wastes and privies?
2. Is there an impervious apron to exclude surface water?
3. Are the sides of the well sealed for 3 m below ground level?
4. Are the rope and bucket inaccessible to the users?
5. Is the well water chlorinated?

Shallow tube wells, or driven wells, are valuable in soft soils or sand, particularly in delta areas where the water supply is sparse. Exhibit 5 shows a tube well and the sanitary precautions that should be checked.

Plain tubing should extend to a depth of three meters, the perforations being confined to the lower depths. A watertight concrete platform with a drain all round should be provided. The area within 15 meters of a tube well should be kept free from pollution with liquid and solid wastes. The hand pump should be kept in good repair and leaks should be prevented.

A perforated jacket is usually provided to cover the wire gauze in the aquifer portion. "Sand blows" may indicate damage sustained while the well is being driven or any subsequent subsoil subsidence. A detailed examination may be necessary to decide whether repair or relocation of the well is needed.

If tube wells are properly constructed with precautions against seepage, they should not become polluted with the infective agents of enteric diseases. Disinfection of these wells is not feasible. Frequent bacteriological checks of the water are, however, essential.

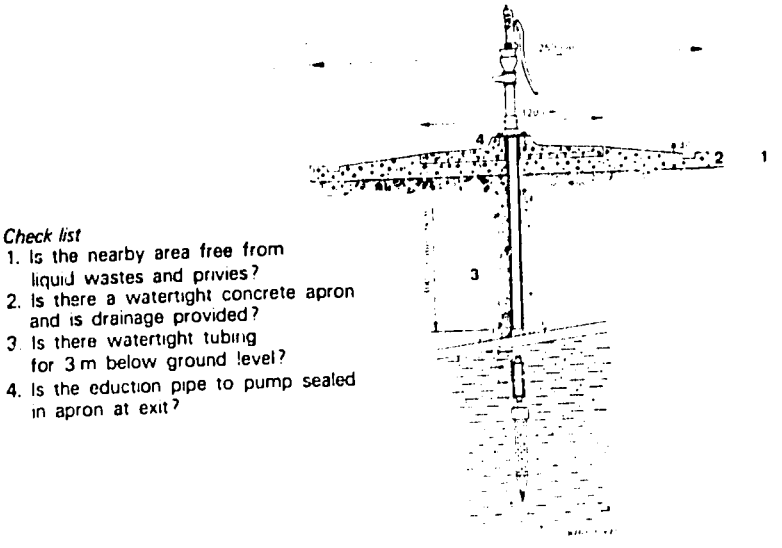

Exhibit 5: Tube well (Source: Rajagopalan & Shiffman)

Deep drilled wells should normally be free from disease producing agents, although contamination may occur through the pump parts or at the delivery points. Quality surveillance of the supply at the delivery points should provide adequate safeguards as an emergency control measure.

Ground water emerging as springs often provides a satisfactory source of water for nearby communities. Sanitary measures are important in the area around the source to keep the supply safe. A masonry chamber, placed so as to intercept the flow, will provide the take-off point. The supply can then be piped to a distribution tank near the community. Chlorination is desirable in emergencies. Exhibit 6 shows a protected spring source and a checklist of the necessary sanitary precautions.

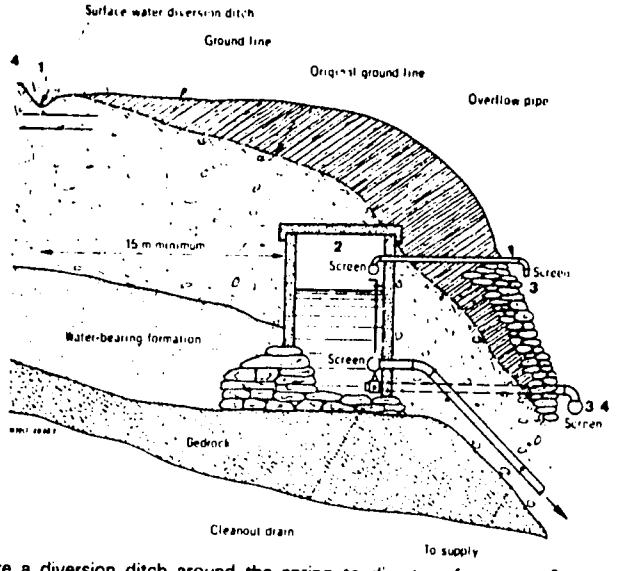

Check list

1. Is there a diversion ditch around the spring to divert surface water?
2. Is the collection structure inaccessible to users?
3. Is drainage provided below the outlet pipes?
4. Are animals excluded by fencing of spring area?

Exhibit 6: Protected spring source

Source: Rajagopalan and Shiffman

The efficacy of the measures described above depends to a large extent on the willing participation of the consumers in observing certain basic precautions at the individual and family level. Strict cleanliness should be enforced in the vicinity of the well-points; personal ablutions, washing of clothes and animals, and the dumping of refuse and wastes should be prohibited. Ropes and buckets from individual homes should not be used for drawing a supply from the well. Water from the well-point should be carried in clean sanitary vessels to individual houses, where it should be stored in clean covered containers. Long-handle dippers should be used to avoid contamination of the stored water. A measure of personal hygiene relevant to these requirements should be taught by health education and through the mass media.

Planning: Drinking Water Supply

Successful planning for a safe drinking-water supply is the result of a thorough assessment of environmental data, health data, facilities, supplies, money, material, and manpower. There are certain preliminary factors that impact on the ultimate success of planning any public health program. These factors are government support, bureaucratic infrastructure, community support and participation, financial resources, and manpower resources.

Dietrich (1976) has addressed the particular role of these factors in successful planning for drinking water supplies. "Government support. Strong government commitment and support is a major prerequisite for the success of any development program. Clear examples are found in countries (like the Dominican Republic and Brazil) where, by establishing a national institution and policy and by implementing a dynamic program of education, consultation,

stimulation, and organization of the communities benefiting, success was ensured. Close technical supervision at all levels, fullest exploitation of economies of scale wherever possible, and the development of financial and managerial procedures tailored to local needs are among the items deserving full government support.

"Institutional building— infrastructure. Experience from early ventures in the development of water supply programs has shown that the most common reason for failure in follow-up on investment in developing countries was the absence of a sound and viable organizational structure.

"The provision of water supplies requires substantial amounts of capital, and the physical plants represent a large portion of a country's infrastructure assets, both to protect the investment from deterioration and to provide for its effective operation and maintenance. Continuous and sound management is, therefore. essential.

"In developing countries, the infrastructure for planning, implementation, management, administration, and evaluation of national programs falls within the purview of more than one ministry. Hence, major coordination is required to maximize the efficiency of this important area or function.

"Community participation— Increasingly evident is that one of the main reasons for the slow development of water supply programs is the lack of community participation and motivation. On the other hand, any visions of a global solution of the community water-supply problem will remain a wishful dream without a strong involvement of the community to be served and a determined self-help approach.

"The first step in any community water supply program should be to determine the willingness and interest of the community in the undertaking; secondly, the capability of contributing to the costs of construction in labor and cash; and thirdly, the capability of the community of managing the system and collecting revenues for operation and maintenance.

"Implicit in the above is the great need for community workers, health educators, sanitarians, and others to motivate people and develop a demand for water-supply service in the community. Last but not least, ways and means also should be found to motivate the policy and decision makers. This could be achieved by producing well prepared project-feasibility reports in which cost-benefit and financial-economic studies are well documented and easy to understand with a view to assisting the decision making process.

"Financial resources. Lack of funds is generally a common constraint facing every developing country, and the only alternative is to secure outside financing.

"Often, however, the country does not succeed in trying to obtain foreign funds. One of the reasons is poor project formulation and presentation. Countries should be made aware that a prerequisite for assistance to cover the foreign exhcange component of a project is a comprehensive and well prepared pre-investment survey that would include both economic and engineering feasibility studies. Careful presentation and selection of alternatives and a thorough discussion of the economic and financial aspects involved is essential for lending agencies and decision makers. Projects so presented have found acceptance in national development plans and have attracted outside investment from national, international and bilateral lending agencies.

"Cooperatives, housing banks, lotteries, revolving funds, to name a few, means of support have all been used successfully in securing funds for water-supply programs. Where the economy level is low, the government is obliged to subsidize. Operation and maintenance, however, must be accepted by the community as their responsibility.

"Manpower resources. The importance of skilled manpower in the development of any water supply program is most evident and has been dealt with earlier. Unfortunately the majority of countries in the developing world are faced with the problem of lack of competent personnel both at the professional and subprofessional level. Though the involvement of UN agencies in improving the quality and numbers of manpower available for water-supply work has been consistent, it is far from meeting the needs of the countries.

"Training of nationals both at professional and subprofessional levels has always been one of the main objectives of practically every WHO-assisted environmental health project. Training for subprofessionals is generally carried out at schools of sanitation. As for professionals, courses in sanitary engineering have been conducted at nearly 25 engineering centers, including the universities of Nairobi, Lagos, Zaire, Kumassi, Ankara, Tangoon, Bandung, Bangkok, Chile, Bolivia, Peru, Lahore, Tehran, Rabat. Funds for training pruposes in many cases are provided by UNDP and also by UNICEF for equipment and supplies.

"Though methods of training vary in different countries, the type of personnel required is about the same and includes civil and sanitary engineers health inspectors, water-treatment plant operators, mechanics, plumbers, masons, carpenters, administrators, accountants, and clerks. To train such a vast quantity of personnel also requires availability of professors, trainees, educational institutes, teaching materials, and funds that are woefully inadequate in most developing countries. On the other hand, one also has to guard against merely formal classroom training with no in-service experience under supervision.

"Considerable progress has been made, particularly in Latin America and in some countries in southeast Asia. Concerted efforts, however, by the respective governments in collaboration with international agencies will be required for most countries for many years to come.

"Technology. In practically every situation related to the planning and design of water-supply projects, the technical aspects and the technology involved are known and there is an abundance of knowledge and experience in the field. All the same, often systems are planned and designed poorly and the costs inflated to the ultimate detriment of the country concerned.

"In many instances, alternatives are selected with no economic and financial considerations nor consideration for engineering aspects and the technology applied. This ultimately reflects in the equipment and materials used being far from conducive to conditions prevailing in the country. In this connection the WHO International Reference Center for Community Water Supply at the Hague, through its 30 collaborating institutions in as many countries, ensures that the right know-how and technology is made available on request.

"The main criteria for the selection of systems should be the ability of the community to support the system both financially and otherwise. In other words, the systems should be planned and designed on the basis of what the population is capable of paying in terms of capital recovery and costs of operation and maintenance and not left to the whims of the consulting firms and manufacturers of equipment whose interests may not be those of the community served."

Planning Urban Supply Systems

The technologies involved in the delivery of a safe drinking-water supply fall broadly into the following categories: access and distribution from the source; treatment; and distribution to the community. It must be stressed at this point that the effectiveness of these technologies to prevent ill-health will depend upon the implementation of a surveillance program in conjunction

with these technological interventions. Additionally, a critical issue to be resolved is the establishment of appropriate technology; those methods that are feasible for a given community with respect to such factors as financial resources, maintenance personnel, material, and available natural resources; while simultaneously ensuring the protection of the community from potential water-borne diseases. This manual does not suggest the existence of absolute solutions to this issue. Rather, alternative methods and technologies shall be presented here with descriptions of costs and additional features to consider in the decision-making process of planning.

Access to groundwater is certainly the most complicated. It is typically facilitated by wells, springs, and infiltration galleries. A wide variety of technologies exist, for example, in the construction of wells; each differing with respect to technical sophistication, maintenance, applicability to a particular terrain or climate, custom, resources, etc. However, the fundamental issue is clearly the protection of the water from contamination in the well or pump. Here the planner must be concerned, primarily, with three factors; protection of the well from geological hazard, from contamination from surface water, and from proximity to other sources of pollution. The sanitary survey will determine many of these factors and proper sanitation practices will ensure maximum protection. For further information the reader is directed to the reference section where sources of technologies for both rural and urban areas are provided.

A watershed used to supply untreated water should be sparsely inhabited, have no source of pollution, generally be at or near the point of rainfall or snowmelt, and consistently yield clean, clear water. Use of the watershed should be under the control of the water supply authority, and the waterworks staff should make regular and frequent inspections. Even though samples of water from such sources are certified "safe," water entering the ultimate distribution systems should be chlorinated in order to maintain residual protection in the system in case of chance or sporadic contamination of the source.

The waterworks staff must never take the attitude that because the water is subject to treatment or disinfection they are absolved from the necessity of maintaining the best possible raw water quality at the intake. Even the most complete, best operated treatment plant cannot be relied on to operate perfectly at all times; the selection of the purest possible raw water must therefore be considered a necessary preliminary to treatment. This is especially true of intakes from large rivers or open bodies of water. Intakes should be well upstream of sewer outfalls.

The siting and depth of the point at which water enters the supply system may greatly affect water quality. Draw-offs should be sufficiently far below the surface to avoid floating matter. Conversely, an intake set too low may draw in mud and sediment from the bottom. This may interfere with the proper working of pumps and filters. Another hazard is the possibility of counterflow. In an outbreak of infectious hepatitis in 1955, a diversion wall installed to increase the depth of water available caused an upstream eddy in the river as a result of which a waterworks intake received sewage effluent from a discharge some distance downstream.

In cases where the risk is apparent but unavoidable, micro-strainers or coarse sand roughing filters can be installed as a pretreatment precaution, or the intake can be changed to an infiltration gallery along the bank. Another possibility is to construct a raw-water holding reservoir with a capacity of several days' supply where presettlement and some die-off of bacteria may take place. Sediment removal facilities may be necessary for highly turbid raw

waters; control of algae may be required in some cases.) Such devices may not only improve the quality of the raw water but, by reducing the load on a treatment plant and stabilizing the quality of the water to be treated, may increase the capacity of the plant quantitatively.

Many failures to meet bacteriological requirements are directly related to the use of poor operating and maintenance procedures for distribution systems or to the presence of sanitary defects in the system. Some causes that contribute to poor bacteriological quality are:

- Insufficient treatment of water at the production plant;
- Cross-connections;
- Improperly protected distribution system storage:
- Inadequate disinfection of water mains and failure to maintain chlorine residuals in the system;
- Unsatisfactory construction and repair of water mains;
- Close proximity of sewers and water mains;
- Improperly constructed, maintained, or located blow-off, vacuum, and air relief valves ;
- Negative or low pressures and intermittent or interrupted flows in the distribution system;
- Improper consumer plumbing practices (direct connection of booster pumps, for example);
- Leakages, especially when combined with low pressures;
- Dead-end mains;
- Faulty hydrants; and
- Faulty maintenance.

Unlike the water source and the treatment and storage installations, much of the distribution system is placed underground and cannot be examined directly. For a sanitary survey, therefore, the maintenance and review of water system records is even more important. Residual chlorine and bacteriological records, both the results of tests and the points of sampling, should be closely inspected. Sampling should emphasize fringe areas and dead-ends within the system. Another useful record series, if available, is a comparison of treated water pumped and water distributed to consumers. If losses exceed about ten percent, and certainly if they exceed thirty percent, leakages and the control of leakage merit further investigation. Records of system pressures, if available, should also be reviewed. Low pressure may result in a flow of polluted water through leaks into pipes and back-siphonage through leaks or improper connections.

One of the most common problems encountered in many water systems is the large quantities of water lost or wasted after entering into the transmission and distribution systems. Losses result from leakage in poorly constructed systems or when pipes become corroded, from illegal connections, from meters which under register, and from records which have been lost on customers receiving service. Because of the economic consequences of large water losses, including the health hazards of poorly maintained systems, technical sections of every water institution need to give high priority to prevention and correction of water losses. Consideration of metering policy should represent a deliberate choice of the extent to which consumer connections are metered. Some practices which may need attention are administration of the billing and collection system, meter reading procedures, measures to avoid graft, illegal connections, and so on.

When the area, or line, in which there is a leak is known, a pipe locator should be used to determine the exact location of the pipe; a listening stick applied directly to the pipe or to the ground surface above a pipe is very effective in transmitting sounds to the ear. Amplifying devices such as

stethoscopes or special equipment exist but there is no evidence that pipe locators or amplifiers are better than a listening stick for distinguishing the noise of a leak from other noises, their advantage is that they produce a louder output. (An extensive and useful summary of leak detection in India has been published by the Central Public Health Engineering Research Institute.)

Reservoirs for storing finished waters (service reservoir) should be located above probable groundwater levels and well away from surface runoff and underground drainage. Provision should be made to guard against sanitary hazards related to the location; groundwater levels, movements, and quality; the character of soil; the possibility of pollution by sewage; and overtopping by floods. Sites in ravines or low-lying areas subject to periodic flooding should be avoided. Good practice indicates that sewers located within 15 meters of a storage reservoir with a floor below ground level should be strongly constructed with sound, tested, water-tight joints. No sewer should be located closer than three meters to a reservoir.

A suitable and substantial cover should be provided for any reservoir elevated tank, or other structure used for storing finished water. Covers should be watertight, constructed of permanent materials, provided with handles and locks, and designed to drain freely and prevent contamination of the stored water. Manhole covers should be provided with a sturdy locking device and should be kept locked when not in use. Reservoirs and elevated tanks on the distribution system should be disinfected before being put into service or after extensive repairs or cleaning have been completed. A schedule should be prepared for regular maintenance and inspection.

Of primary concern to the environmental health planner is the treatment of water: that point at which regular action is taken to control potential health hazards. The basic treatment scheme involves coagulation, sedimentation, filtration, and disinfection. All of these processes are recommended for urban communities utilizing surface water as its principal drinking water source. Coagulation is facilitated by the introduction of chemicals known as coagulants. Common coagulants include alum (aluminum sulfate), "black alum," activated alum, ammonium alum, and sodium aluminate.

These substances are typically introduced in two steps: flash or rapid mix and slow mix. The slow mix promotes floc formation; the agglomeration of coagulated material into larger, filterable particles. Enmeshed in the floc are microorganisms, suspended particles, and colloidal material; all of which will settle out during the sedimentation process. The choice of a particular coagulant or coagulants is dependent upon the properties of the water, especially its pH, chemical constituents, color and hardness.

The process of sedimentation occurs naturally, without the addition of chemicals, in all bodies of water, resulting in the settling out of suspended solids. This settling out, however, is escalated by the previously induced flocculation. Sedimentation tank design will vary depending on: the quantity of water; the detention period; and the surface overflow rate. Basically, however, the process is the same.

Filtration is accomplished most frequently by means of either slow sand filtration or rapid sand filtration. However, under certain specialized conditions either pressure filters or diatomaceous-earth filters may be utilized. The selection of any one of these methods will be dependent upon a variety of local factors as well as inherent advantages and disadvantages.

Slow sand filtration involves the gradual flow of water over a large bed of fine sand particles creating a large total surface area for adsorption of impurities. This method is recommended for rural communities. The advantages

of slow sand filtration are summarized by Cox in a World Health Organization document (1964).

- There is no need for coagulation facilities.
- Equipment is simple and need not be imported.
- Suitable sand is readily secured.
- Supervision is simple.
- The effluent is less corrosive and more uniform in quality than chemically treated waters.
- They give effective bacterial removal

The disadvantages of slow sand filtration as compared with rapid sand filtration have also been summarized in this publication as follows:

- A large area is required, with correspondingly large structure and volume of sand and higher structural cots.
- They have less flexibility in operation.
- They are not economical with raw waters having turbidities over about 30 units for prolonger periods, unless preliminary plain sedimentation will secure such turbidities in the settled water.
- They are less effective in removing color.
- They give poor results with water of high algal content, unless pre-treatment is practiced."

Slow sand filters are simple to operate, requiring relatively unskilled labor, are generally reliable in terms of filtrate quality, provide water that meets drinking-water standards (assuming reasonable raw water quality), and do not require imported mechanical equipment. Slow sand filtration has been advocated for use in developing countries, especially in small plants with manual cleaning where this may be the sole treatment to which the water is subjected. Extensive guidelines for the operation and inspection of slow sand filters are given by Huisman and Wood. As a biological treatment system, slow sand filters must be used with care. Sudden variations in flow or raw water quality can be harmful. Therefore, it may be necessary to store the water both before and after filtration.

Good bookkeeping is essential for monitoring a slow sand filter. The history of each filter should be established day by day, recording at least the following information:

- the date of last cleaning;
- the date and hour of return to full service (i.e., end of the ripening period);
- raw and filtered water levels (measured each day at the same hour) and the daily loss of hea;
- the filtration rate and the hourly variations, if any occur;
- the quality of the raw water, including temperature, turbidity, color, and bacterial count (in small plants lacking laboratories, bacteriological testing may not be feasible; such situations place even more importance on measurements of turbidity and residual chlorine in finished water samples taken each day at the same hour);
- the same quality parameters for the filtered water; and
- any incidents that may have occurred and which could affect plant operation, such as plankton development, troubles with the "Schmutzdecke" (i.e., biological film), wind and rain, etc.

Rapid sand filtration is designed "to receive coagulated and settled water; in these filters colloidal material and bacteria are adsorbed on the gelatinous floc and are removed with the floc." (Cox, 1964). Consequently, the water must be sufficiently pretreated for this method to be effective. In the establishment of rapid sand filtration facilities particular attention should be paid to

the availability of power sources and trained personnel as well as other local factors.

The operation and control of rapid sand filters is described in detail in Operation and Control of Water Treatment Processes. The operation of filters should be controlled by tests for turbidity and color and by bacteriological examinations of the water. The objective should be to produce water with a turbidity of less than 0.5 Jackson units (JTU). In well operated plants turbidity will not normally exceed 1.0 JTU; turbidities greater than 5 JTU are detectable by consumers. Rapid sand and slow sand filtration processes require regular monitoring and surveillance. Exhibit 7 presents a checklist for proper surveillance of these processes.

Pressure filters operate by the same basic principles as the gravity promoted sand filters. However, the process takes place in steel cylinders designed to withstand high water pressure (typically up to 10 atmospheres). This advantage is counteracted by many disadvantages summarized, again by Cox (1964), as follows:

- The treatment of water under pressure seriously complicates effective mixing, coagulation, and sedimentation of the water to be filtered; many pressure filters are thus installed without adequate coagulation facilities.
- It is more difficult to apply chemicals to water under pressure.
- The appearance of the water being filtered and of the sand bed is not under observation, nor is it possible to observe the effectiveness of wash water or the degree of agitation during the washing process.
- Because of the shape of pressure filters it is difficult to provide effectively designed wash-water piping to ensure that material washed from the sand is discharged to waste and not flushed back to other portions of the sand bed.
- It is difficult to inspect clean, and replace the sand, gravel, and underdrains of pressure filters.
- The operation of such units under pressure encourages the pumping or forcing of water through the beds at excessive rates."

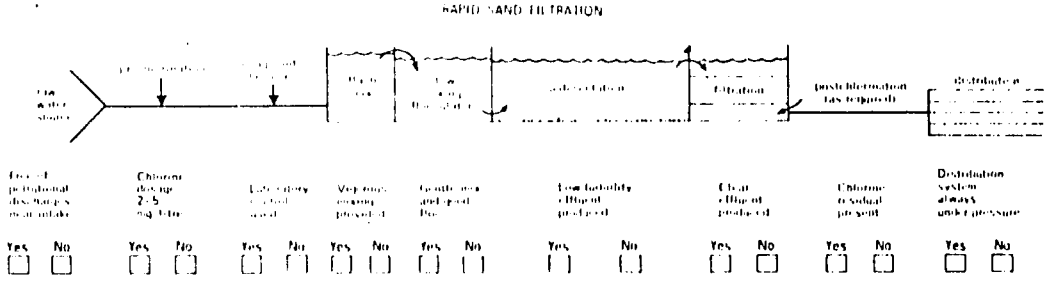

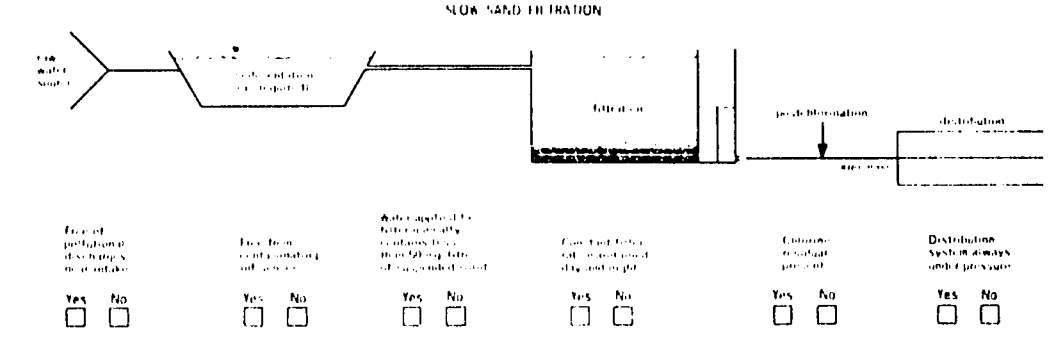

Pressure filters continue to be used for smaller water supplies because they may be assembled in the factory and shipped for immediate installation.

Diatomaceous-earth filters are not typically used for drinking water supplies. They are compact and of relatively low weight thereby proving most useful in emergencies or temporary situations. Their use, however, is only recommended for the clarification of waters of initially low turbidity. Furthermore, diatomaceous-earth is not available everywhere and is costly to import. The advantages and disadvantages of diatomaceous-earth filters have been summarized by Cox (1964).

The advantages of the diatomaceous-earth filter may be summarized as follows:

- There is a large filter area per unit of over-all dimensions.
- Their weight is low compared with pressure sand filters of the same capacity, favoring their use as portable units.
- Waters with turbidities less than about 30 units may be effectively clarified without coagulation.
- The fine powder forms as effective a filter medium for the removal of bacteria, and especially the cysts of dysenteric amoebae, as sand filters coated with alum floc.
- These filters may be operated with one pumping operation, as contrasted with raw- and filter-water pumps of gravity sand filters.

The disadvantages of these filters are as follows:

- The units are effective only so long as each precoat is properly applied and the flow is continuous so they are more dependent on effective operation than are rapid sand filters.
- The loss of head is much higher than with sand filters.
- Diatomaceous earth is not generally available throughout the world.
- Difficulty with clogging of the fine openings of elements presents problems, especially if uncoagulated iron is present in raw waters or if raw water is forced through the elements before an effective precoat is formed.
- These filters have short filter runs if coagulated and settled water is applied, because of clogging by residual alum floc.

Chlorination is, by far, the most commonly performed means of disinfection of water. Other disinfectants include bromine, ozone, and ultraviolet radiation. Although bromine is effective, equipment for its storage and application are less readily available than for chlorine. Furthermore, chlorine and chlorine compounds are less expensive. Ozone has been used in Europe for many years; it effectively removes tastes and odors as well as disinfects. Its use is costly, however, due to the high energy input required to regenerate the ozone. Ultraviolet radiation, also an effective disinfectant, requires a high degree of maintenance and the equipment for its application is costly.

Chlorine functions as a disinfectant by destroying potential pathogens and by providing a protective residual in the water to maintain a certain level of purity.

Its additional functions include: the oxidation of certain compounds such as hydrogen sulfide, manganese, and iron; the destruction of certain odor- and taste-producing substances; the prevention of the growth of algal and slime organisms in treatment plants; and the provision of assistance in the coagulation process. Furthermore, testing a water supply for residual chlorine is an effective means of surveillance. Often in those plants of

insufficient size the examination for residual chlorine serves as a substitute for bacteriological analysis.

Under certain circumstances chlorination alone is sufficient treatment of a water source. However, caution must be exercised. Generally speaking, mere chlorination is effective only under the following conditions:

1. the degree of bacteriological pollution is moderate and reasonably uniform, and the bacteria to be destroyed are not shielded from the chlorine by being bedded in suspended solids or within the bodies of worms, for example:
2. the turbidity and color of the water do not exceed 5-10 units;
3. the content of iron or manganese (or both) in the water does not exceed 0.3 p.p.m.;
4. the chlorine demand of the water does not fluctuate so rapidly as to prevent proper adjustment of the chlorine dose;
5. taste- and odor-producing substances are absent or do not interfere with the selection of adequate chlorine doses through the production of chlorine tastes;
6. There is a contact period of at least 15 minutes between the point of chlorination and the house connection of the consumer first supplied with water. Cox (1964).

Most typically, therefore, chlorination is performed in conjunction with the previously mentioned procedures, following filtration, however, prechlorination is commonly performed before coagulation, especially in waters with a high organic content.

Some of the more frequent and preventable sanitary deficiencies that occur in water supply systems are listed below. These lists are neither complete nor universally applicable. The examples provided suggest possibilities for contamination to be anticipated and avoided by appropriate planning, and to be considered during periodic surveys and assessments of existing works or operations.

Groundwater contamination sources include caves, sink holes, or abandoned borings used for surface drainage or sewage disposal in the vicinity of the source; fissures or open faults in strata overlying water-bearing formations; casing of tubular wells leaking or not extended to a sufficient depth, or not extended above ground or floor of pump room, or not closed at top, or casing improperly used as a suction pipe.

Also among groundwater sources are a collecting well or reservoir subject to contamination by back-flow of polluted water through improper drain or by entry of surface drainage, lack of covers; improperly designed manholes, vent openings, etc., that may permit contamination; supply sources or adjacent structures that are subject to flooding; use of tile pipes or other conduits that are not watertight in locations where the groundwater may be contaminated; leaks in systems under vacuum; air-lift line or lines cross-connected to a sewer or secondary water supply.

Other sources of groundwater contamination include wells located near sewers, pit privies, cesspools, septic tanks, subsurface tile systems, drains, barnyards, pits below ground surface, or other sources of contamination; wellheads, well casings, pumps, pumping machinery, exposed suction pipes, or valve boxes connected to suction pipes located in pits extending below the ground surface; manufacturing, industrial, or agricultural plant wastes discharged or spilled on watersheds or into underground strata causing contamination of groundwater supplies.

Failure to disinfect new wells and springs leads to contamination, as does failure to provide sanitary facilities for construction workers; use of pump that is not self-priming; unsafe water used for priming.

Distribution system contamination may stem from intermittent service resulting in reduced or negative pressures in distribution system; sizes of mains and laterals inadequate for preventing negative pressures; presence of dead-ends permitting reduced or negative pressure; lack of provision for maintaining continuity of pumping service under all conditions; repumping on consumer premises when pressure is low, causing negative head; existence of cross-connections between the primary supply and a secondary supply of questionable safety; or presence of a secondary non-potable water system on premises where a public system exists in the absence of adequate regulations and enforcement procedures to prevent the occurrence of cross-connections.

Lack of, or inadequate, enforcement of plumbing regulations and/or ordinances designed to protect the water supply against the possibility of backflow. So can connection of new pipelines to the system without prior disinfection of pipes; unauthorized operation of water supply facilities by persons other than waterworks employees; or existence of leaky pipes in the distribution system.

Improper location of water pipes in relation to sewers and stormwater drains may be the culprit, or return to the system of water used for cooling purposes; connections to sewers and sewer-flushing chambers, and improperly located blow-offs in the distribution system; or inadequate wash-out points to permit distribution mains to be flushed or swabbed; insufficient valves to permit the isolation of different parts of the distribution system.

Distribution system contaminants may also come from poorly designed valve, blow-off, and meter boxes, hydrants, and "pit taps" that may permit puddles or groundwater to accumulate with consequent risk of back-siphonage, spread of helminthic diseases, and breeding of mosquitos; poorly drained and protected street fountains; and defective service reservoirs.

Surface water sources and treatment can be contaminated by excessive raw water pollution in relation to extent of treatment provided; existence of uncontrolled or unidentified sources of pollution such as population on watershed, lumbering, hunting, grazing, and other activities; leaching cesspools or sewers draining into streams or lakes in the catchment area or into adjacent marginal land; also accidental spillage and runoff of herbicides, pesticides, and agricultural chemicals; no restrictions on recreational use of streams and reservoirs on marginal land in the local catchment area.

Similarly, contaminants may come from inadequate sanitary facilities and control of contamination at reservoirs used for recreational purposes; improper location of intakes with respect to bottom of reservoir and current or to inlets for surface drainage water; intakes exposed and accessible to trespassers; improper location of water treatment plant or inadequate protection against flood waters; lack of competent supervision and operation, fault maintenance, or lack of adequate laboratory control.

Lack of proper chlorination equipment invites contamination, as does unreliability of equipment and lack of control; failure to maintain proper chlorine residuals in the treated water at all times; lack of suitable devices for measuring and recording volume of water treated and for maintaining continuity of coagulant and chlorine dosages; deficient retention periods in settling basins or inadequate filtration and backwashing capacity.

Also consider the existence of cross-connections, by-passes, or common concrete channel walls within the plant— between conduits or basins carrying untreated or partly treated water and those containing completely treated

water, for example; by-pass connections for raw water or partially treated water, permitting such waters to be discharged into the distribution system; lack of reserve capacity in treatment works, necessitating excessive overloading or occasional by-passing of units.

To these sources should be added: lack of sanitary latrines and washing facilities for waterworks personnel; contamination by infected employees or by unauthorized visitors; inadequate arrangements for cleaning and draining floors, tanks and aprons; lack of suitable protection for purified water, such as a storage capacity less than that required for safety.

Planning Rural Supply Systems

The Assessment and Planning sections on rural water supply are integrally related. Many of the factors to be assessed may be viewed as planning consierations. The following section will describe measures useful in supplying safe drinking water to areas having none. Rajagopalan (1974) provides some simple methods of source development including emergency supplies, emergency distribution systems, and prevention of pollution.

It is possible to improvise safe water supplies for special endemic and problem areas where no supply exists. The inventory of rural communities referred to earlier will help to identify areas where the provision of a safe water supply would be possible. Some simple methods of source development for rural systems are indicated below.

Dug wells are suitable for water-bearing formations of adequate extent and porosity. The yield is governed more by the depth than the diameter of the well. The provision of weep holes and radial strainers will increase the yield.

Tube wells are very suitable in deltaic regions with deep deposits of alluvium. Where cholera is endemic, several suitably located shallow tube wells will help to protect the population from epidemic cholera. Instructions for the construction of tube wells were given by Wagner and Lanoix (1959). It should be pointed out that the often recommended procedure of forcibly driving in the pipes for shallow tube wells (7.5 m) with the aid of wrenches is unsatisfactory as it results in damaging the well point or clogging it with earth. Investigations have shown (Pollizer, 1949) that water from this type of well remains safe even when surface conditions are insanitary.

The ready availability of a nearby unsafe water source, such as a local pond or irrigation canal poses a health risk to the community. The abstraction of a safe supply from such polluted sources is essential.

An infiltration gallery in the bed of a pond that filters the raw water and delivers it into a well located at the margin of the pond is one such way. This well can provide a safe supply through hand pumps, keeping in mind that sediment builds up on top of the gallery, which may retard the subsequent free passage of water. The surface silty layer should therefore be removed periodically. The cross-section and length of the gallery should depend on the quantity and rate of draw at the well. Normally a gallery 2.5 x 2.5 x 10 m should be able to provide about 10,000 liters per day.

It may be possible to install an infiltration gallery in a canal bed either across or along the course of the canal with a suitable clear-water collecting well by the bank. If the canal is unsuitable for this purpose (because of size or other limitations) it may be feasible to draw off a supply of raw water through a pipe into a bypass channel and pass this water through a filtration gallery.

In certain places a tunnel driven into a waterbearing stratum can function as an infiltration gallery, the collected water being led out by gravity. Comparatively firm but porous subsoil layers in undulating country near the

foot of a range of hills might be suitable for such a system. However, the construction may be slow and expensive. This system of water collection is common in the eastern Mediterranean area and in North Africa (the galleries are called "Karez" or "Khanat" in Iraq and Iran).

An infiltration well sunk in the sandy bed of a river can provide an economical and dependable safe supply of water. Such wells are usually at least three meters in diameter. The cost of the well increases with increase in diameter more rapidly than does the yield; the depth is governed by the depth of the waterbearing stratum and the required yield. The provision of weep holes in the well-lining below the draw-off level, or the insertion of radial strainers at the lower levels, would increase the yield.

Porous plugs placed at the bottom of such wells after the initial "training of the yield" facilitate the abstraction of a greater yield by permitting increased velocities of entry without "sand blows." The plug functions as an inverted filter comprising suitably graded coarse sand and broken stone, the depth and composition being designed to suit the texture of the subsoil layers and to maintain the layers immediately below the curb level undisturbed during pumping. Wells in sandy river beds should be taken well below the maximum scour range to prevent subsidence and damage to the well during high flood flows.

Multiple wells suitably arranged in a sandy river bed increase the yield obtainable from the source at a single pumping point. A system of wells with interconnecting pipes across the course of the river to arrest the subsurface flow, or along a ground water contour is a satisfactory arrangement. The spacing of such wells is governed by the need to reduce mutual interference to a minimum and the cost of constructing the wells and of the piping and the frictional losses up to the pump head. Submersible pumps operating on individual wells would provide greater latitude.

Galleries are better than a system of wells, as they help to arrest the subsoil flow along their entire length with a comparatively lower drawdown, and avoid the necessity for an expensive interconnecting pipe system deep in the river bed. The alignment, structure, and placement of a gallery in the river bed should be decided in relation to the texture of the subsoil layers, the scour zone, the supply required, and the safe drawdown.

In rivers where there are seasonal variations in surface flow, a subsurface impervious barrage placed across the river downstream of the infiltration works would help to raise the level of the subsurface flow and facilitate abstraction of the supply.

An impervious, hard, or rocky river bed may preclude the abstraction of a safe supply from any type of infiltration system placed in the river bed. Other raw water sources may also pose the same problem. Surface treatment measures may be necessary in such cases to render the raw water potable for a community supply and it is worthwhile examining the nature and physical quality of the raw water to see whether slow sand filtration would be satisfactory as a final treatment, with plain sedimentation (aided by chemicals if required) as a preliminary treatment.

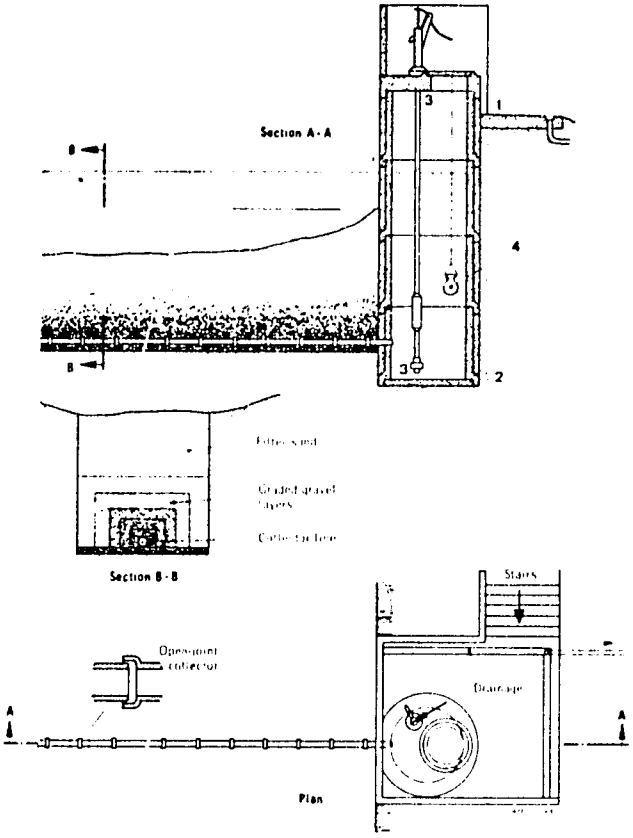

Check list

1. Does the collecting well extend 1 m above ground?
2. Is the collecting well sealed watertight throughout?
3. Are the inlet and outlet pipes well sealed in place?
4. Is the water chlorinated?

Exhibit 8 Infiltration Gallery in Village Pond

Source: Rajagopalan and Shiffman

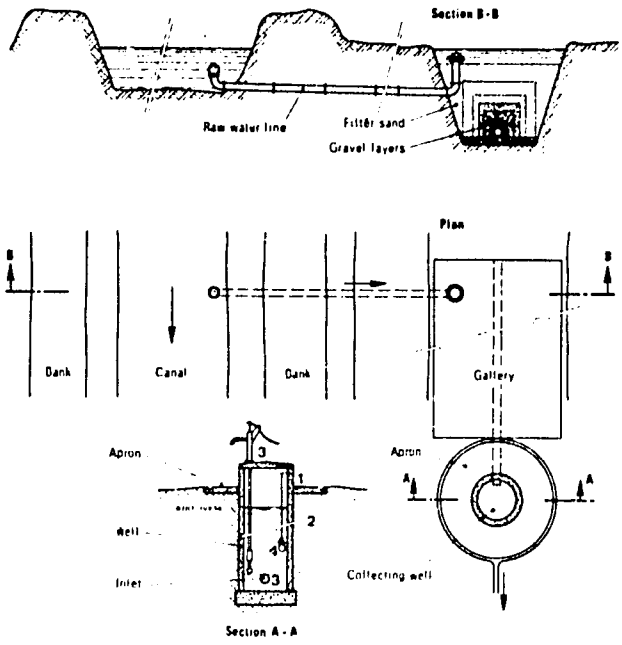

Check list

1. Does the collecting well extend 1 m above ground?
2. Is the collecting well sealed watertight throughout?
3. Are the inlet and outlet pipes well sealed in place?
4. Is the water chlorinated?

Exhibit 9 Infiltration Gallery for Canal
Source: Rajagopalan and Shiffman

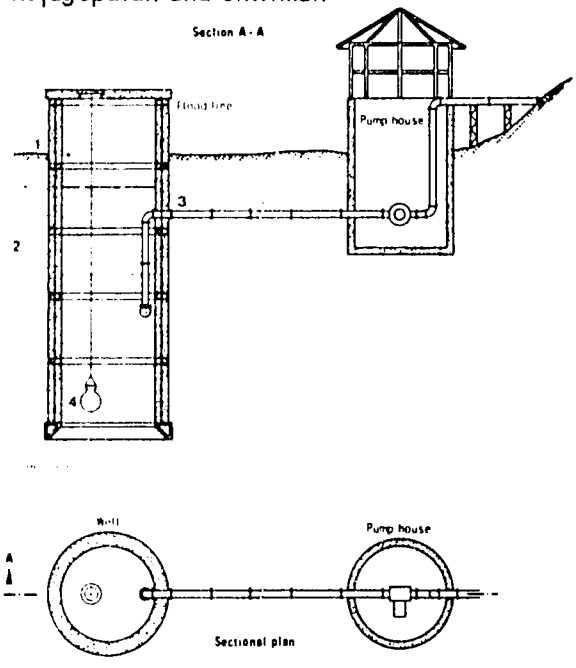

Check list

1. Does the infiltration well extend above mean flood level?
2. Are the sides of the well sealed watertight to the bottom?
3. Is the outlet pipe well sealed in place?
4. Is the water chlorinated?

Exhibit 10 Infiltration Well in River Bed, and Pump House
Source: Rajagopalan and Shiffman

Where emergency supplies can be made available by improvements at the source and the treatment works, it is necessary to provide for the distribution of such supplies to the consumer areas. The proximity of an available safe supply usually decides the extent to which it is used by a rural community, particularly when unsafe sources are more easily available. It is therefore advisable to investigate all the possibilities of making the supply easily accessible to the rural consumer. It may be possible temporarily to increase the carrying capacity of existing transmission mains by lowering the end delivery point, by duplicating part of the main, by intermediate boosting, or even by diverting part of the supply to serve nearby areas ahead of a centrally located elevated service storage. The hazards inherent in ill-served and unserved areas, even if rural, should be overcome by providing temporary distribution points in extended pipelines, or, as an alternative, small distribution tanks mounted on cribs with a number of well distributed taps to serve as many consumers as possible within an "accessible zone." Water tankers should be used for the distribution of safe water only in needy areas where no other provision has been possible, so releasing available water tankers to serve problem areas without a source and without a supply.

The distribution of water to needy areas by powered vehicles is expensive and can be justified only in an emergency. It should not engender a relaxation of the efforts to implement a planned program of simple measures to deal with water shortage in endemic and problem areas.

Water tankers should be designed and built to ensure the safe quality of the water at all stages. Drawing, hauling, and delivery arrangements should be proofed against contamination. The interior of the water containers should be smooth, free from dust, and rust-proof and the drain plug should be protected by a sanitary seal. It is essential to ensure that the tanker is filled from a safe source in a hygienic manner and that the operating crew are not carriers of pathogens. It is equally essential to provide chlorinating equipment (either at the filling place or with the tanker) so that the water can be effectively disinfected, and has a free chlorine residual of not less than 0.2 miligrams per liter when delivered to the consumers.

Water is heavy to haul and the percapita distribution may have to be restricted to drinking and culinary needs. Such limitation may defeat the objects of distributing water; it may result in poor personal hygiene and sanitary discipline, and may transfer the transmission route to food and filth. Health education is particularly necessary under such emergency conditions.

As an ad hoc arrangement to produce safe water from raw water sources to serve the emergency needs of a local community or a fair, portable water treatment plants mounted on a truck are suitable. Usually, such a plant includes: a centrifugal pump directly coupled to a petrol engine; a rapid sand filter unit (of the pressure type); chemical solution tanks (one for alum and one for soda ash); a chlorine solution tank; a hypochlorinator; hose adapters; valves (pump suction inlet, drain, air-release, outlet, and flow control); and an instruction manual for guidance in operation and handling. The device aims at chemically treating the raw water and passing it through a pressure filter without prior sedimentation. Effective chlorination of the effluent must be available in emergencies to protect against deficiencies in the process.

Supplies drawn from polluted domestic wells and individual dwellings can result in spread of enteric diseases at the community level. Three methods are generally available for purifying water on an individual or domestic scale: boiling, chemical disinfection, and filtration.

Boiling yields total sterilization of the water against all bacteria, spores, cercariae, cysts, and ova. To be effective however, the water must be brought to a "rolling boil" for five minutes.

Chemical disinfection. The water can be disinfected in the well or in intermediate storage containers by appropriate methods described elsewhere. One of the easily obtainable materials containing chlorine may be used for the purpose.

Filtration. A household sand filter is not foolproof. Ceramic filters are to be preferred, since the water to be treated is usually clear. With turbid water, prior clarification through a sand filter is necessary. Coarse-grained filter candles are useful to remove suspended matter, helminth ova, cercariae, and cysts; they are only partially effective in the removal of pathogenic bacteria. To be satisfactory for water purification, the maximum pore diameter of a porcelain filter candle should be 1.5 m. Infusorial (diatomaceous earth) filters are equally effective, if the finer grained candles are adopted for efficient bacterial filtration. Filters and their attachments should be carefully examined at frequent intervals to guard against cracks or leaks. The filters must be cleaned and boiled at intervals. Proprietary filters often generate a false sense of security in developing countries, while lack of maintenance and unsafe handling practices detract from their value. These household methods can never be relied upon on a community scale.

The Decision to Treat

The decision to treat a particular water supply is related to quality and quantity factors as well as costs, manpower, material, equipment, etc. Alternatives therefore must be considered, including either the supplying of untreated water, as is, supplying untreated water after 48 hours standing, or abandonment of the source. Feachem (1977) has provided an algorithm of the decision process to treat, not to treat, or to abandon a particular source, presented in Exhibit 11. The decision process should be carefully studied as an example of needed planning issues or questions to be raised in developing any rural drinking water supply. The criteria on which he bases these judgments are described as follows:

a	E. *coli* per 100 ml	Supply untreated
a-b	E. *coli* per 100 ml	Treat if possible, if not supply untreated
b-c	E. *coli* per 100 m.	Treat if possible, if not supply untreated or abandon depending on various other factors
c	E. *coli* per 100 ml	Treat if possible, if not abandon or supply untreated depending on various other factors

The values of a, b, and c may vary with local conditions and with increasing knowledge. However, Feachem suggests that a equal 10, b equal 100, and c equal 1,000. This approach may be most helpful in rural communities.

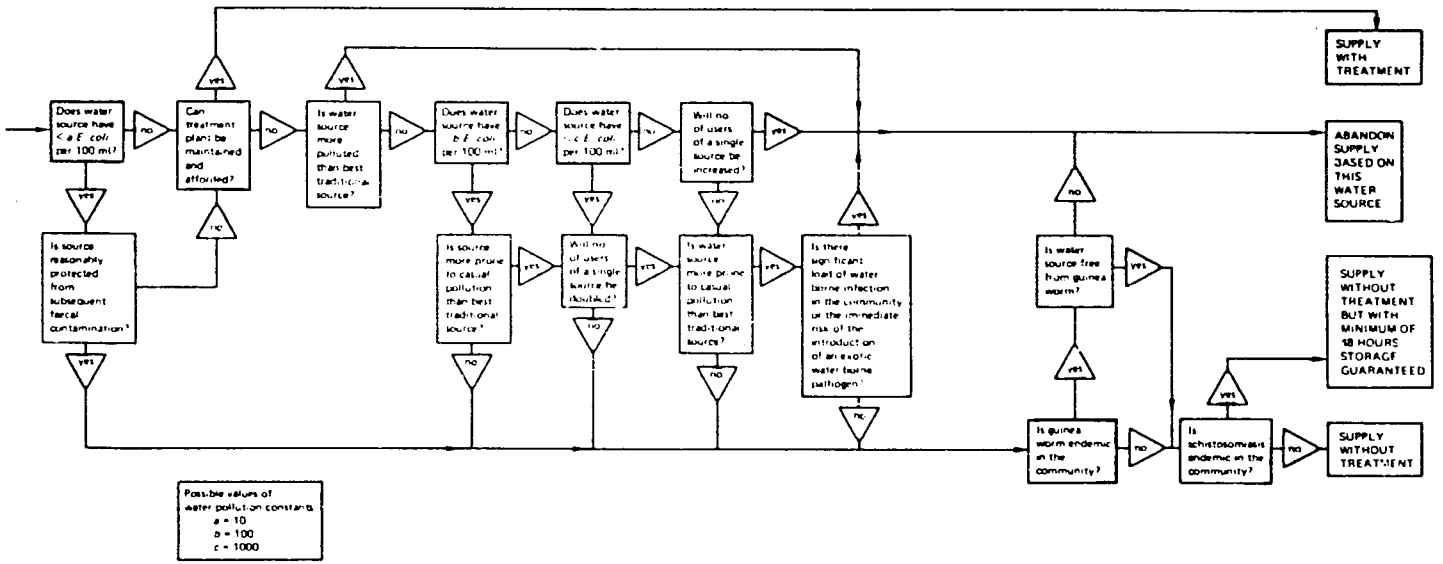

Exhibit 11 An Algorithm of the Decision to Treat, Not to Treat, or to Abandon a Particular Water Source

References and Additional Reading:

American Public Health Association, American Water Works Association, and Water Pollution Control Federation. Standard Methods for the Examination of Water and Wastewater, 14th ed. Washington, 1976.

Bradley, D.J. "Health aspects of water supplies in tropical countries." (pp. 3-17) Feachem, R., McGarry, M., and Mara, D. Water, Wastes and Health in Hot Climates. London: John Wiley and Sons, Ltd., 1977.

Bradley, D.J. "The health implications of irrigation schemes and man-made lakes in tropical environments." (pp. 18-29) Ibid

Carruthers, I. and Browne, D. "The economics of community water supply." (pp. 130-160) Ibid

Centre belge d'Etude et de Documentation des Eaux (1964-1966) Livre de l'eau guide practique a l'usage des ingenieurs et des techniciens, 2e ed., rev. et completee, Liege

Donaldson, D., "Progress in the rural water programmes of Latin America." (pp. 213-227) Feachem, R., McGarry, M., and Mara, D. Water, Wastes and Health in Hot Climates. London: John Wiley and Sons, Ltd., 1977.

Evison, L.M. and James, A. "Microbiological criteria for tropical water quality." (pp. 30-49) Ibid

Feachem, R.G. "Water supplies for low-income communities: Resource allocation, planning and design for a crisis situation." (pp. 75-95) Ibid

Gesellschaft Deutscher Chemiker, Fachgruppe Wasserchemie (1960) Deutsche Einheitsverfahren zur Wasser-, Abwasser- and Schlammuntersuchung, 3rd ed. Weinheim, Verlag Chemie

McGarry, M. G. "Institutional development for sanitation and water supply." (pp. 195-211) Feachem, R., McGarry, M., and Mara, D. Water, Wastes and Health in Hot Climates. London: John Wiley and Sons, Ltd., 1977

Ministry of Forestry and Water Management in cooperation with the Hydraulic Research Institute, Prague (1968) Standard methods for the water quality examination for the Member Countries of the Council for Mutual Economic Assistance, Prague

Pescod, M.D. "Surface water quality criteria for tropical developing countries." (pp. 62-72) Feachem, R., McGarry, M. and Mara, D. Water, Wastes and Health in Hot Climates. London: John Wiley and Sons, Ltd., 1977

Pickford, J. "Water treatment in developing countries." (pp. 162-190) Ibid

Rajagopalan, S. Guide to Simple Sanitary Measures for the Control of Enteric Disease. Geneva: World Health Organization, 1974

Rodier, J. (1966) L'analyse chimique et physico-chimique de l'eau (eaux naturelles, eaux usees), 3d ed. Paris, Dunod

White, A.V. "Patterns of domestic water use in low-income communities." (pp. 96-111) Feachem, R., McGarry, J., and Mara, D. Water, Wastes and Health in Hot Climates. London: John Wiley and Sons, Ltd., 1977.

Whyte, A. and Burton, I. "Water supply and community choice." (pp. 113-129) Ibid

Williamson, D. and Mann, H. Water Treatment and Sanitation: Simple Methods for Rural Areas. London: Intermediate Technology Development Group, 1973.

World Health Organization. International Standards for Drinking Water, 3rd ed. Geneva, 1971

World Health Organization. Surveillance of Drinking Water Quality. Geneva, 1976.

CHAPTER SIX

WASTEWATER AND EXCRETA DISPOSAL

World Health Organization assessments of the extent of sanitary facilities in the developing countries indicate that excreta disposal systems are particularly inadequate. In fact, within the developing world, 86 percent of the rural population lack an adequate water supply, and 92 percent lack adequate excreta disposal facilities. Of the urban populations, only 28 percent have water borne sewerage facilities and 27 percent have no sanitation facilities of any kind (Feachem, McGarry, and Mara, 1977).

The emphasis of the WHO and other agencies in improving sanitation for the developing countries has been primarily on the delivery of community water supply systems. Studies in this area indicate that without the accompanying improvements in excreta disposal, the disease potential of water supply systems may actually be enhanced, particularly in areas where enteric diseases are endemic. This enhancement of disease potential is accomplished through the increased availability of contaminated water to greater numbers of people. Because of this fact, the World Health Organization now stresses the importance of providing adequate means of excreta or wastewater disposal in the developing countries.

This exemplifies a common problem associated with the development process: in the course of the establishment of improvements for the protection of health, further hazardous conditions are produced. These conditions then necessitate further technological intervention. This issue is a reflection of the interrelationships between the various subsystems of environmental health.

The primary waste materials of concern in this section are excreta and all other organic wastes produced in households, agriculture, and industry. The term "wastewater" includes all or any combination of the above waste substances. The focus of this chapter shall be on the various methods of collection, treatment, and disposal of excretory material primarily.

Typically, feces are deposited either on land or in water. Aquatic systems are a primary disposal medium, possessing self-purification properties capable of decomposing and dispersing organic materials. However, the increasing load of organics corresponding to increasing populations has overloaded the natural cleansing mechanism of many aquatic systems. Soil as a disposal medium also provides certain benefits. Feces dry and decompose in the soil, thereby replenishing certain basic nutrients needed for plant cultivation. This natural process, however, has become impractical with population growth since deposition must, of necessity, occur in close proximity to human settlements, thus attracting rodent and insect pests. In both cases, it is evident that these basic methods of deposition directly into the environment are inadequate. Furthermore, basic disposal methods used in many countries are also inadequate, being improperly constructed, maintained, and utilized.

Studies of environmental health conditions in many rural areas of developing countries indicate that indiscriminate defecation on land, improper

maintenance of simple latrines or pit privies, and inconsistent use of these facilities are common occurrences. Closely associated are the problems related to the attraction of insect and rodent pests, and the overflow of fecal material into the water supply system. Additional organic load on the water is promoted by laundry and bathing habits, as well as the defecation by domestic and wild animals in the water.

Deposition of excretary material on land presents a number of potential hazards through direct contact with the feet, attraction of pests and vectors to the area, transmission to food crops, and particularly contact by children and domestic animals (WHO, 1972). Certain intestinal parasites are most typically contracted by stepping on dried feces. Ascariasis, trichuriasis, and ancylostomiasis (hookworm) are contracted in this manner. Other diseases of fecal origin that may be contracted from soil include cholera, salmonellosis, bacillary dysentery, typhoid, paratyphoid, and amoebiasis.

Flies are typically attracted to excretary material. Flies not only harbor numerous disease organisms in their systems, but may also function as intermediaries, carrying pathogens on the surfaces of their bodies from feces to a food source. Furthermore, foods themselves may serve as intermediary media for the transmission of certain enteric diseases, particularly as a result of the use of feces directly as fertilizer. Wastewaters also serve as breeding sites for numerous disease vectors such as Culex pipiens, the vector of filariasis.

Chemical substances originating from fecal materials are primarily organic and may be classified as either lipids, amino acids, cellulose, hemi-cellulose, lignin, protein, or ash. Although these breakdown products of plant and animal tissue do not typically produce disease, they do as a group, produce certain adverse effects on the environment, particularly the aquatic environment. High levels of organic matter in water stimulate the growth of microbial populations which, in turn, utilize the dissolved oxygen available in the water. Depletion of sufficient quantities of dissolved oxygen, accompanied by high levels of organics, eventually lead to conditions of eutrophication in certain aquatic systems. Eutrophication, of course, does constitute a health hazard in that the water supply eventually becomes unfit for human consumption.

Although toxic chemical substances do not originate in excrement, they may be found in association with excretary materials and, once associated, often become concentrated. For example, chemicals used in households, agriculture, and industry enter the sewers and/or the water supply. Conventional treatment methods do not remove many chemicals. Therefore, reuse of these wastewaters for irrigation or fertilization will cause further accumulation of potentially toxic chemicals. Additionally, food crops, and in some cases, animals, then accumulate these chemicals at high levels.

This potential for accumulation of toxic substances inherent in the reuse of waste materials should not, however, preclude their reuse. Here again, consideration must be given to a number of interacting factors that influence the ultimate health impact of a given wastewater source. These must be assessed on an individual basis, considering the types of technologies utilized, ultimate use of the recycled waste, particular chemical hazards encountered in that locality, and local priorities where trade-offs must be made.

Assessment of Wastewater and Excreta Disposal Techniques

In the assessment of existing wastewater or excreta disposal projects, a wide range of technologies are being used. A census of existing facilities by region, along with available regional information in the areas of area

description, medical and sanitary data, resources available, and ongoing surveillance work is important. The data needed in each of the four specific areas werr discussed generally in the Assessment and Planning chapter. Data needed to assess the quality of specific technologies and their surveillance are listed in the technologies section of this chapter.

In scattered rural areas primary concern should be for the provision of individual (privy) facilities that are sanitary and regularly used. Assessment would include determining whether: (1) facilities are properly maintained, (2) local contamination of soil or water supply might be attributed to malfunctioning or location of the facility, (3) odor and insects are controlled; and (4) facilities are sufficient for the population and its expected growth.

In densely populated rural areas, semiurban, periurban, and urban areas, individual systems may operate along with community disposal systems. Assessment should include similar factors, with additional attention to the functioning, capacity, and quality of the community system. Certain alternatives are discussed at length in the Technologies section.

In the assessment of existing excreta disposal systems of the individual and community types, a set of data should be collected that would be useful for assessing capacity and for planning changes in a system. The parameters and data sets of potential use in such an assessment are listed below.

Waste Clasification:
- Domestic (type, age, mode of delivery)
- Industrial (type, age, mode of delivery)
- Agricultural (type, age, mode of delivery)
- Combination (type, age, mode of delivery, realtive percentages)

Waste Characteristics
- Volume (minimum, average, maximum daily)
- Concentration of organic materials (BOD_5, BOD_u, COD)
- Solids (special industrial wastes; total, settleable, suspended, dissolved, total volatile, and fixed solids)
- Nutrient concentrations (nitrogen, phosphorus)
- Color materials (suspended, dissolved)
- Toxicity (BOD reduction rates, bioassays, and specific aquatic microorganisms)
- pH (minimum, average, maximum)
- Quality of tap water (mineral analyses)

Hydrology and Meteorology
- Evaporation (average, seasonal variations)
- Rainfall (average, seasonal variations)
- Air and water temperatures (average, seasonal average, average hottest month, average coldest month)
- Groundwater (average depth, permeability of formation)
- Percolation rates (preferably measured with waste to be treated)
- Wind (strength and direction for time of day, seasonal average)
- Cloud cover (percentage of daytime, season, and year)

Light
- Solar radiation (minimum monthly, average annual, seasonal variations)

Topography
- Soil characteristics (ease of excavation, embankment use, percolation, compaction)
- Flood stages (high-water marks)
- Availability of contour map
- Location of houses, industries, agriculture
- Streams (drainage of all types)

Regulations, public health data
- Potential odor problems
- Potential insect problems
- Community data (local zoning restrictions, effluent and stream standards, ownership of lands, location of waterworks)
- Health regulations (effluent and stream standards, coliform bacteria standards, special quality regulations for drinking water and food processing, bathing water criteria; wildlife, recreation, fisheries regulations; and prior appropriated rights to wastewaters)

Use of Effluent
- Groundwater supplementation
- Surface water supplementation
- Immediate irrigation
- Industrial reuse
- Development of wildlife
- Recreational use

Wastewater Quality Analyses and Criteria

Sampling of wastewater quality, particularly after treatment, is an important practice. Standardized methods of determining wastewater and receiving water quality have been developed in many countries, e.g., those published by the American Public Health Association, American Water Works Association, and the Water Pollution Control Federation in 1975. This section describes the methods used for the determination of water quality, and states the precision of the determination and the significance of each analysis in the assessment of quality. The Recommended Resource section lists some of the more important reference manuals in the field of wastewater quality. Simplified laboratory procedures for wastewater examination, published by the Water Pollution Control Federation in 1968, should be particularly valuable in developing countries.

The suspended solids are those removed in filtration through a standardized fine medium. They are classified as fixed and volatile, the latter being the material that is organic in nature and expected to be amenable to biological degradation or incineration; the fixed solids are essentially inert materials. The suspended solids can further be classified on the basis of their settleability. Those that are settleable should normally be removed in large measure in sedimentation tanks of one type or another, whereas the nonsettleable suspended solids require some additional treatment, either chemical or biological, to remove them from the wastewaters. The suspended solids content is important in design and disposal, because it determines the sludge handling requirements of the plant, including those for dewatering and drying the sludge as well as for its final disposal.

Dissolved solids are the solids in the filtrate obtained after removal of the suspended solids. They represent the salts in solution, including the mineral salts from the water supply. Dissolved solids are important mainly where wastewaters are to be reused after treatment. The dissolved solids remain unchanged by most conventional forms of treatment.

The accumulation of local analytical data is important for planning a water quality control program. Where a laboratory is not yet available, the laboratory facilities of the public health or public works agency or of a local university could be used. Specific analyses made in the absence of a sewerage system are discussed in the technologies section of this chapter.

In a community or region where a sewerage system already exists, the best method of determining wastewater quality is by the analysis of the wastewater itself. Samples for such an analysis must be taken over a 24 hour period, as a definite proportion of the flow, and for at least one full week. This procedure should be repeated during different seasons if seasonal variations are to be expected in rainfall, temperature, or population. Such an analysis, when related to the population tributary to the sewer system, can help to establish the per capita contributions of waste to the system so that population equivalents for that community or region can be established.

The Biochemical Oxygen Demand (BOD) is a measure of the organic matter present in wastewater. It is determined by measuring the amount of oxygen absorbed by a sample of the wastewater in the presence of microorganisms during a specific period, generally five days, at a specified temperature, generally 20 degrees centigrade. While it is customary to determine BOD at a temperature of 20 degrees centigrade in tropical countries, a higher temperature may be selected in order to avoid the cost of incubators that would require both heating and cooling units. A BOD at 30 degrees centigrade, for example, would be appropriate in parts of the world where ambient temperatures tend to be high. It is also appropriate, where high temperatures are used for standard BOD determinations to reduce the duration of the test from five days to perhaps four or even three days, thereby reducing the required incubator capacity, as samples would then have to be stored for shorter periods. The BOD, the primary measure of the strength of wastewaters, is also an indicator of the expected effect on receiving streams caused by reducing their oxygen content. In general, the degree of treatment provided by the wastewater treatment plant is selected so the BOD of the effluent will not be such as to reduce the oxygen level in the receiving waters below that necessary to enable the best use to be made of them.

The Chemical Oxygen Demand (COD) is also a measure of the strength of wastewaters; it is a measure of the oxidation requirements of a sample under prescribed conditions, as determined by using a chemical oxidant. This indicator is generally useful where industrial wastes are important. In any given system, a relationship may exist between COD and BOD, but this will vary markedly from one city to another.

Coliform organisms, including Escherichia coli, provide presumptive evidence of the presence of pathogens, both bacterial and viral. Since human feces contain about 1×10^{12} coliform organisms per capita per day, all sewage is heavily contaminated with these organisms.

The pH is a measure of the acidity or alkalinity of the wastewater. Where industrial wastes are present, the pH indicates whether there is a need for pretreatment in order to prevent interference with conventional waste treatment processes. Generally speaking, the pH of domestic is near neutral.

Dissolved Oxygen (DO) can be important in the operation both of sewerage systems and treatment plants. Water supplies are normally saturated with oxygen, but this is rapidly depleted when organic wastes are added to the water. In temperate climates, where the sewers have adequate slopes, the wastewater may reach the treatment plant in reasonably good condition, although the oxygen level might be quite low. In warm climates and where the sewers have flat slopes, however, so that velocities are low, solids are deposited, and the water takes a long time to reach the treatment plant, the wastewaters will probably become completely devoid of oxygen and septic. Septic wastewaters are more difficult to treat and give rise to odors, both in the sewerage system and at the treatment plant. The DO level of wastewater is highly variable and not at all stable. The objective in managing raw wastewaters is therefore to maintain sufficient dissolved oxygen to prevent anaerobic conditions, a trace generally being sufficient. In treated effluents, a level of one or two mg/liter as contrasted with saturation values of about ten mg/liter is desirable.

Where there is a need to disinfect treated wastewater effluents, the chlorine demand is an important index of quality, since it is a function of the strength of the waste. The higher the degree of treatment, the less the chlorine demand of the effluent is likely to be.

Wastewaters contain significant concentrations of nitrogen and phosphorous. Conventional treatment does not reduce their concentration significantly. Ordinarily, they are not troublesome in the receiving stream, nor will they be troublesome where wastewaters are to be reclaimed for irrigation or industrial use. Where wastewaters are to be discharged into relatively clean bodies of water, such as lakes or estuaries, however, these nutrients may enrich such waters to the extent that excessive algal growth will be stimulated and the receiving waters may be harmed because of the enrichment (eutrophication).

Where industrial plants discharge into the sewerage system, many chemicals may then enter the system that interfere either with treatment processes or with the quality of the receiving waters. For example, copper accumulates in sludge digestion tanks and interferes with the digestion process.

Grease may cause serious difficulties in the management of wastewaters, particularly where it is intended to reclaim the wastewater or to use the sludge. In the absence of discharges from particular commercial or industrial undertakings, the amounts of grease normally found in wastewaters are not troublesome. However, oil, grease, and gasoline from filling stations may cause difficulties, and separators are then required. Detergents may also be troublesome, particularly where wastewaters are to be discharged into turbulent streams so that foam is likely to be a nuisance. Many countries have outlawed the use of the so-called hard detergents that are not readily removed in treatment processes, but even excessive amounts of "soft" detergents may be troublesome where treatment is not adequate. These detergents emanate from households. Other special difficulties may be caused by industrial wastes. Special precautions may be necessary.

Technologies for Excreta Collection and Disposal

Any system of excreta disposal must take into consideration the habits and priorities of the people with respect to defecation and other practices. Traditionally, the industrialized nations have been willing and able to spend large sums of money for a system that will remove human wastes such that the average citizen need have no direct contact with excrement. In the less industrialized nations, however, funds are more limited and, furthermore, individual citizens are not often willing to pay such a high price for excreta disposal. Nevertheless,

the need for some form of sanitary excreta disposal is considered to be crucial to the elevation of the health status in the developing countries. The planning and implementation of progeams, therefore, may very well involve a variety of compromises both from the economic and technological standpoint and from the public health standpoint.

Traditionally, recommendations for technological alternatives have been geared towards developed country alternatives. These are often unsuited to the climate, terrain, personnel availability, degree of technological advancement, and economy of the developing country. The objective here is to propose and evaluate intermediate technologies that may be feasible for the developing country.

The excreta disposal and treatment subsystem may be subdivided in numerous ways: rural vs. urban; community vs. individual; and water-carriage vs. nonwater-carriage. Most appropriate for this document is the rural vs. urban delineation and the relevant technologies, with additional consideration to high density rural or peri-urban areas that are becoming more common in the developing areas.

The technologies for handling of excreta are typically characterized as either collection, treatment, disposal and/or reuse. It is within this framework that those technologies most applicable to either rural or urban communities of developing countries will be discussed. In many cases, these processes are combined. Any excreta disposal system should be designed with consideration of the following factors proposed by Wagner and Lanoix (1958):

- Surface soil contamination
- Groundwater contamination.
- Surface water contamination.
- Contamination of excreta by flies or animals.
- Handling of excreta.
- Odors or nuisance.
- Complexity and expense in construction and operation of the system.

The pit privy is widely used throughout the world. It requires a minimum of attention to location and construction to safeguard against soil and water pollution. It is simple in design, can be built from local materials in most cases, and is easy to maintain, requiring minimal upkeep. Additionally, the pit, if kept covered, will not attract flies and, even if left open, fly infestation will not be great since the pit is always dark and housed in a superstructure. Odors are negligible and no handling of the feces is required. A key advantage of this method is that it is inexpensive to construct and can be constructed by a local family without assistance and with locally available resources. The lifetime of the pit privy is five to fifteen years, depending upon the capacity and utilization of the pit. In spite of all these benefits, experience has shown many failures in the effectiveness of the pit privy (McGarry, 1977). This has been attributed primarily to the lack of accompanying education of local peoples in the use and maintenance of the pit, and to the fact that local people did not participate in either the decision-making process or the actual construction of the facility (Shelat & Mansuri, 1977). Clearly these drawbacks are associated with the lack of success of many rural technology programs.

The bored-hole latrine is similar to the pit privy, having an identical outhouse superstructure and functioning on a similar principle. The major difference is that the bored-hole latrine pit is of smaller diameter and greater depth. Its life is considerably shorter (1-2 years), thereby requiring frequent construction. However, the unit is generally easier to construct than is the pit privy, if appropriate equipment is available. An

important consideration is that soils be free of rocks and stones that might facilitate contamination of groundwaters. This type of facility is recommended for emergency or temporary situations.

The following points should be examined during a sanitary survey of pit privy and borehole latrine installations:

- Size of the pit or hole in relation to the number of users;
- Local subsidence that might indicate caving in;
- Precautions against surface flooding;
- Cleanliness of set; use of hole covers;
- Absence of foul smells;
- Presence of flies;
- Defects of the superstructure, doors, floors, ventilation, etc., and
- Age of pit or hole, level of sludge, and dispersion efficiency.

The physical facility of a pit privy or bored hole latrine will be similar to that presented in the following illlustration. The following planning factors should be considered in developing such a latrine or in the assessment of an existing facility.

- Is it located more than 6 meters from dwellings and 30 meters from wells?
- Is a cover provided for the floor slab opening?
- Is tamped earth mounded around the privy for drainage and fly seal?
- Is there an impervious floor base to prevent emergency of larvae?
- Is the pit lined for 1/2 meter at top for strengthening?
- Is the pit volume sufficient for four or more years service?

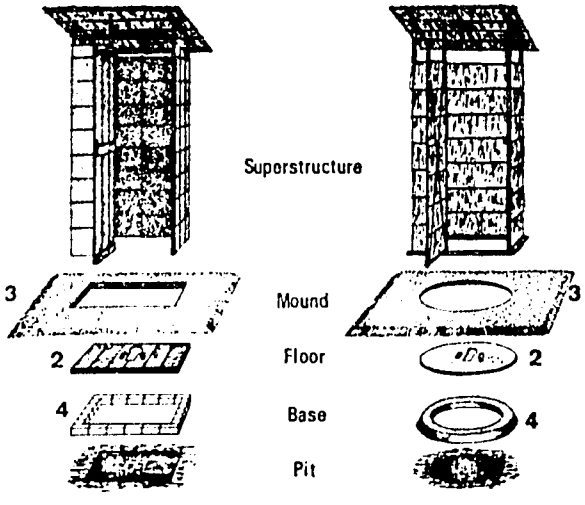

Figure 1: The pit privy

The aqua privy is a modification of the septic privy. It consists of a tank filled with water and a chute extending to it from the latrine floor. Feces and urine are decomposed anaerobically in a similar manner to the septic tank. If the facility is properly constructed and maintained, it will satisfy the aforementioned seven selection criteria. Additionally, it is a permanent installation which, although requiring operation and maintenance daily, is relatively simple and inexpensive. The aqua privy may be placed nearer a dwelling than other methods, since there are essentially no odors and it will withstand greater abuse than the pit privy.

This type of facility requires regular maintenance for it to satisfy the above advantages. The disadvantages of the aqua privy include a high initial cost, the need for sanitation and health education to promote proper maintenance, a water requirement (although small compared to water-carriage methods), a daily operation and maintenance requirement, and the fact that it cannot be used in cold climates. Maintenance of the aqua privy requires periodic desludging which may make it less suitable for rural areas.

Figure 2 depicts a family-type aqua privy. The figure shows how the drop-pipe provides a water seal barrier. Below the figure is a checklist of planning and assessment considerations.

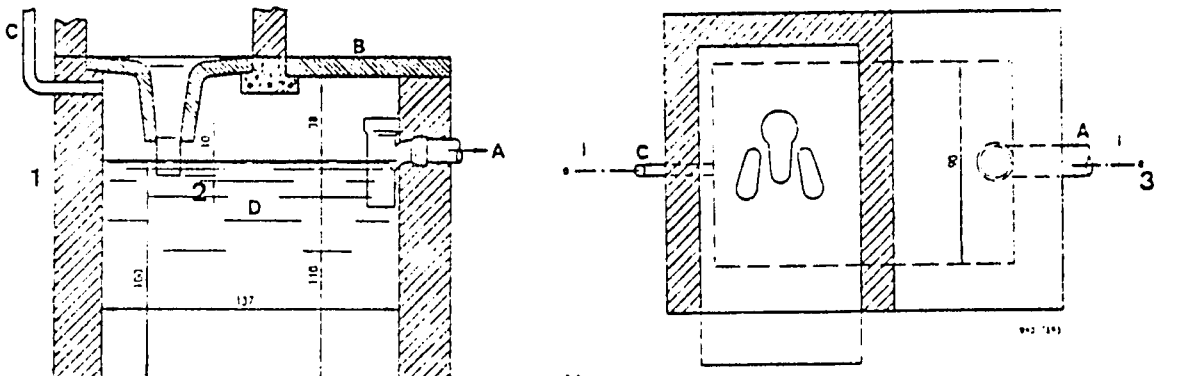

Measurements shown are in centimetres.

A = Outlet to soakage trench or soakage pit

B = Removable, reinforced concrete cover slab

C = 2.5-cm diameter pipe ventilator

D = Capacity of tank : 1340 litres (295 Imp. gal.)

Check list

1. Is the concrete tank of watertight construction ?
2. Does the drop pipe extend below water outlet level ?
3. Is there a seepage pit or subsurface percolation for discharge ?

Figure 2 Family-Type Aqua Privy

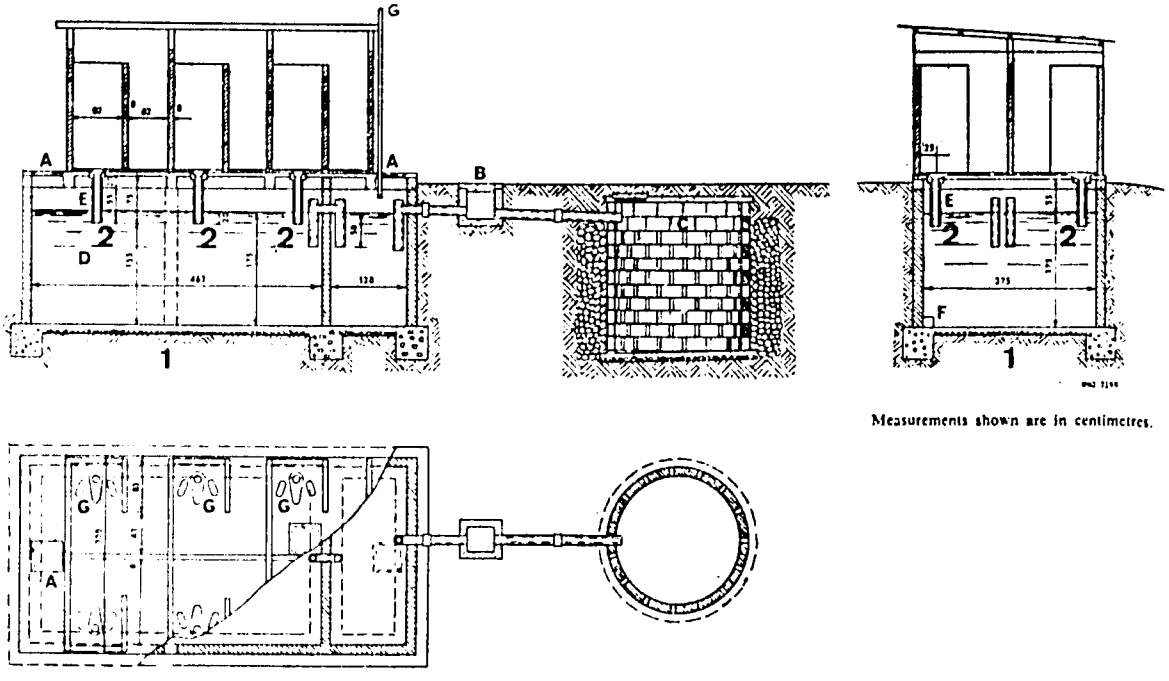

* Reproduced by permission of the United Nations Relief and Works Agency for Palestine Refugees in the Near East.

Check list

1. Is the concrete tank of watertight construction ?
2. Do the drop pipes extend below water outlet level ?

A = Inspection manholes, 40 × 40 cm
B = Inspection box, 40 × 40 cm
C = Soakage pit or soakage trench
D = Capacity of tank : 22.3 m^3
E = Drop pipe 10.5 cm in diameter
F = Opening 15 × 15 cm in partition wall
G = Ventilator pipe

Figure 3 Institutional-Type Aqua Privy
Source: Rajogopalan (1974)

Applicability and effectiveness of the aqua privy depends also on certain sociocultural considerations. For example, although the aqua privy has been very successful in Asia where anal cleansing with water is commonly practiced, it has been highly unsuccessful in certain parts of Africa (McGarry, 1977). The problem described by McGarry occurs in parts of southern and eastern Africa where sticks, mudballs, and stones are typically used for anal cleansing. In the situation, water is not consistently added to the latrine. The water level sinks, and the water seal is no longer in effect. This then leads to fly breeding, odors, and generally unpleasant conditions. The planner must, therefore, consider local sociocultural factors when making judgments.

The water-seal latrine or pour-flush unit is a modified version of the pit privy, the aqua privy, or other methods. It consists of a concrete slab into which is incorporated a bowl. It may be installed over any type of pit or tank. A small amount of water (1 liter) is required to flush waste materials into the pit and maintain a water seal. The water seal excludes flies and prevents odors from escaping. Additional advantages of the water-seal latrine include the fact that it may be constructed close to the house, that it is safe for children, and that it is simple and relatively inexpensive to construct.

The principal disadvantages of this type of installation are that water must be available year round, health and sanitation education programs must be used to teach proper use and maintenance, local soils must be permeable, and use is precluded in freezing climates. Additionally, construction costs are generally higher than for the pit privy, however, they are less than for the aqua privy.

The following check list would be of use in carrying out a sanitary survey of flush-type latrine installations:

- Water provided in the latrine in a container, with a can having a mouth one liter wide for flushing.
- Capacity of chambers in relation to number of users.
- Cleanliness, absence of flies.
- Efficiency of water seal.
- Effectiveness of ground absorption.

This system of excreta disposal is also referred to as box and can privy, conservancy system, pail latrine, or earth closet in English-speaking countries, and as tinettes in French-speaking areas. The basic mechanism of this method consists of a bucket in which excreta are deposited and removed for emptying and cleansing at regular frequent intervals. Some types possess a mechanical device for releasing earth, sawdust, or ash to cover the excreta. Figure 4 depicts a bucket latrine and planning and assessment factors to consider.

The trench latrine and "feurillee" are two methods functioning by essentially the same principle: a relatively shallow pit is excavated, and the user must throw a sufficient quantity of soil over the feces deposited at each use. Additionally, an iron sheet is to be placed over the hole when not in use. Problems associated with this method may be easily projected. If the user does not throw soil in the pit and keep it covered, significant hazards may result. Soil pollution, especially by worm larvae, may result. Fly breeding in enormous numbers, and access of flies and animals to uncovered or lightly covered feces, ground and surface water pollution, and easy access to and scattering of the material by rodents and other animals increase hazards.

The principal benefit of this method is that it is very inexpensive to build and maintain. However, its disadvantages appear to be too costly. This method, if used at all, should only be used as a temporary installation (McGarry, 1977; Wagner & Lanoix, 1958).

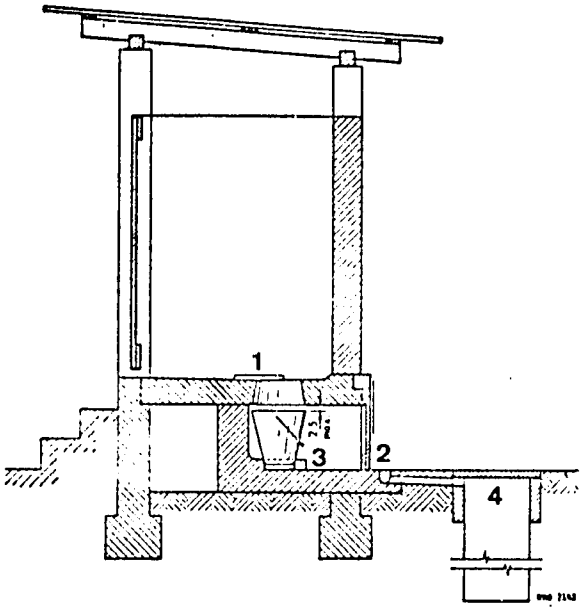

The measurement shown is in centimeters.

Check list

1. Is a latrine seat cover provided ?
2. Is the chamber door self-closing and flytight ?
3. Do the guides position the bucket correctly ?
4. Are a drain and a soakpit provided for wash wastes ?

Figure 4 Bucket Latrine

The overhung latrine consists of an outhouse superstructure and a latrine floor built on top of wooden piles above the banks of some body of water, either seawater or fresh water. These are found around seaports and fishing villages in various parts of the world, particularly in Asian fishing villages where they may constitute one of the only alternatives; for example, where huts are raised on stilts above mudflats or shallow water, far from solid earth.

Under these conditions, certain requirements should be met. The receiving water should be of sufficient year-round salinity to prevent human consumption, and the latrine is installed over such water depth that the bed is never exposed at low tide or during the dry season. Every effort should be made to provide for dilution and carrying away of floating solids from the village. Stream flow should be 14 liters per second per family for adequate dilution, and the walkway, piers, squatting openings, and superstructure are made structurally safe for adults and children.

Further factors of concern with respect to the utilization of overhung latrines include relatively long survival rates of pathogens in fresh and brackish waters; the universal habit of prolonged contact with water in bathing and fishing; and the possibility of stimulating or encouraging more widespread use of this method further inland and upstream, thus emptying into smaller, freshwater bodies of water.

The PRAI (Planning Research Action Institute) type of latrine, developed in India, is a relatively low-cost method easily converted to the bucket or basket type latrine, thereby eliminating the nuisances associated with daily handling of nightsoil (Shelat & Mansuri, 1977). Additionally, water use, where soil is porous, is relatively limited. This method is recommended for use in India for small village communities (Shelat & Mansuri, 1977).

Urban Excreta Collection Technologies

Generally, recommended methods for collection of excreta from urban areas involve water carriage. This is primarily due to the lack of sufficient space in cities for sanitary location and maintenance of latrines. Additionally, where these privies and latrines are found in cities, they quickly become overused, creating highly unsanitary conditions. This situation leads ultimately to the need for some form of water-carriage collection method. Industrialized countries have often, in the past, recommended the traditional sewerage system as the "best" solution, not considering other alternatives that may be more suitable for developing countries in terms of cost-effectiveness.

If the objective is to supply adequate facilities for all inhabitants in an area, then trade-offs may be required, taking into account social, economic, and health considerations. Although the level of technical effectiveness may be lower than with the most advanced methods, it may be more beneficial to provide a system that people can afford and that they are capable of running and maintaining on their own. Numerous trade-offs may be required and it must be stressed here that the choices must be made by the individual governments. For these purposes, governments are encouraged to enlist the aid of, not only engineers, but environmental health and social science experts whose combined efforts may greatly affect the ultimate choice. Furthermore, it may be necessary to perform pilot studies to assess advantages and disadvantages.

McGarry (1977) proposes the following methods as potential wastewater collection solutions for the developing urban community: the septic tank; the aqua privy; the aqua privy-sewerage system; and the vacuum truck and vault.

The septic tank is a large covered settling tank into which raw sewage is led. Wastes entering the system may be of excretory or household origin. The process of sedimentation occurs within the tank; the sludge settling to the bottom for further decomposition. The liquid and lighter floatable solids flow out of the tank for final disposal. Within the tank, the remaining solids undergo anaerobic decomposition. Typically, a septic tank may operate for periods of one to four years before cleaning out of the remaining solids is required.

Upon leaving the tank, the liquid effluent is filtered through soil, sand, or small stones. During this stage, aerobic decomposition is occurring. This process occurs in subsurface pipe or trench systems, however, alternatives may be necessary where groundwater levels are near the surface.

Wagner and Lanoix (1958) highly recommend this method for small communities and rural areas. McGarry (1977), however, describes a number of disadvantages in the use of septic tanks for developing countries. They are relatively expensive and therefore their use will typically be restricted to the wealthy. They require large areas of land for percolation; the area becomes less available with increasing population. Soils must be highly permeable and when they are not, effluent becomes a serious health hazard. Finally, the temptation of a municipality to rely on individual ownership may later result in higher costs when increasing population necessitates reversion to more efficient methods.

The following check list will be of use in carrying out a sanitary survey of installations comprising septic tank latrines:

- Location of the latrine for optimum use;
- Availability of adequate water supply;
- Adequacy of the number of seats for the number of users;
- Efficiency of the water seal as provided; quantity of flush-water required;
- Cleanliness of the seats in use; user proficiency;
- Absence of foul odors and flies;
- Structural defects, broken doors, cracked floors or walls, bad ventilation, defective manhole covers;
- Average detention time provided by septic tank;
- Age of tank, frequency of sludge removal, quantity and quality of sludge;
- Effluent quality and quantity; content of suspended solids;
- Effluent discharge point; efficiency of distribution and dispersion in trench; adequacy of absorption surface; and detention time provided by stabilization pond.

The aqua privy has been discussed in the section on rural collection methods. It may also be applied to the urban community with the same advantages and disadvantages. The restrictions on applicability of the aqua privy to the urban community of a developing country are similar to those mentioned for the septic tank. Desludging may be effectively accomplished by vacuum trucks.

An alternative system that compensates for some of the major drawbacks of the aqua privy, the aqua-privy sewerage system, has been developed and applied in Zambia (McGarry, 1977). This system allows for disposal of all household wastes. Initial settling takes place in the tank, and the liquid then passes out to a sewer system. This system, however, is much less complex than a conventional sewerage system due primarily to the reduction in solids facilitated by initial sedimentation. This factor results in reduced costs for pipes, trenching, and pumping.

As previously mentioned, insufficient flushing of the system with water following defecation may result in breaking of the water seal. Although this concern is still valid, steps may be taken to preclude this eventuality. For example, several aqua privies may be linked in series so that the liquid effluent from the first flows to the second, etc. This system may also be linked initially with a communal washing facility. In this manner, the water seal is assured.

Costs for establishing and maintaining the aqua privy-sewerage system are highly variable. One proposed means of reducing costs is by sharing of the tank between two to four families (McGarry, 1977). McGarry discusses the relative costs of such a system with the conventional sewerage system: "In comparison to conventional sewerage, this system sets the costs of installing a tank on the property with its associated appurtenances and periodic tank desludging requirements against the benefits of shallow pipe trenching, low or nil pumping, and essentially no additional water needed to maintain the water seal. This system holds considerable promise where a capital intensive passive technology is deemed necessary. However, care should be taken to assess relative costs on a case by case basis as both this and the conventional sewerage systems' costs are highly sensitive to local conditions."

The vacuum truck and vault system has been widely used in various parts of Asia. A vault is used for storage of nightsoil and small amounts of water from anal cleansing. The fixture within the house may be a flush bowl or a

squat plate, both using small amounts of water for flushing. At periodic intervals, trucks or carts will collect the contents of the vaults. These contents may then be transported to a treatment or reuse site, such as a fish pond.

The principal disadvantage of the vacuum truck and vault method is that it does not accommodate household wastewaters other than excrement. Additionally, sanitation is maintained by a water seal and therefore cultural habits may preclude its safe use.

The advantages of this method include the facts that it is a relatively inexpensive community system both in terms of installation and maintenance, that it is labor intensive, that the bowl and vault may be locally manufactured, and that the system is extremely flexible, allowing for rerouting at any time (McGarry, 1977).

There is little doubt that the conventional sanitary sewerage system is the most effective method available for collecting wastewaters. However, that degree of effectiveness is often not necessary, nor can many local communities afford to install and maintain it.

The sewerage system begins with a household plumbing system composed of a flush toilet and pipes leading to connections with the community pipes and to the street sewers. As sewage passes through the system. the pipes become larger in diameter and manholes are located periodically for inspection and maintenance. Pipes are constructed such that the force of gravity is utilized whenever possible to move the sewage along at a sufficient velocity. Wherever necessary, pumping stations are employed to counter upward slopes. Typically, the sewerage system leads ultimately to a treatment facility of some sort.

Okun and Ponghis (1975) propose that developing countries should consider conventional sewerage systems for the more urban areas. The level of urbanization at which this becomes practical however, must be decided on an individual basis. And the degree of industrialization is also a critical factor; pollution from commerce and industry may influence the ultimate choice.

McGarry (1977) proposes that sewerage systems are not practical for developing countries, since they require high capital investment and relatively little labor and maintenance. Additionally, he claims that even where sewerage systems have been planned or constructed, they rarely serve the entire population in that urban center, but rather only the wealthier areas. Consequently, outlying areas are often neglected and sanitation facilities postponed to some time in the future.

Nevertheless, rapidly industrializing areas may need to consider the sanitary sewerage system as the only means of dealing with high levels of industrial pollution. In that situation, Okun and Ponghis (1975) have provided an excellent document on planning of conventional wastewater systems (collection, treatment, disposal, reuse) for developing countries. The next section discusses alternative technologies for wastewater treatment that are particularly relevant to densely populated rural and semiurban areas.

In an appraisal of existing sewerage facilities, the WHO recommends that the regularity of sewer cleaning operations should be checked. The sewerage system should be inspected to ensure that no breaks, blockages, or overflows have been left unattended.

The investigation should determine whether there has been any misuse of storm overflows to discharge sewage from overloaded systems, and the condition of the watercourses or drains that might receive such discharges should be inspected. The working routine of the main pumping stations and any substantions should be investigated, taking into account the total quantities pumped (as against the water supplied), to detect any abnormality in the operation of the system.

The quality of the treated sewage effluent as discharged into watercourses should be tested to ensure that it conforms to the quality standard as assumed in the design. If the watercourse is used by communities in and near the area, effective disinfection of the treated effluent should be arranged to cover any period of emergency. If raw sewage is discharged into a watercourse or lake through an outfall sewer, it can become a potential "risk zone" during an epidemic. An outbreak of cholera would contaminate the receiving body of water with the cholera vibrio, and if there is a constant supply of the contaminating discharge this organism may remain in the water for an indefinite period. The use of the contaminated water lower down, for irrigation, bathing, washing, and drinking, may spread infection. As an emergency the possibility of interposing an oxidation pond ahead of the outfall point should be fully investigated.

In any case, emergency chlorination of the sewage effluent should be arranged to destroy pathogenic organisms before they enter the watercourse. Large doses may be used, up to 30 mg/liter, with the object of maintaining a level of free residual chlorine of 0.2-0.5 mg/liter. If raw sewage is discharged into the sea, it is necessary to prohibit public access to the beach in the vicinity during an emergency. If treated sewage is so discharged, it is better to disinfect the treated effluent for the duration of an emergency.

Wastewater Treatment: Conventional and Alternative Technologies

The sanitary collection, treatment, and disposal of human excrement in small communities may be provided by single facilities. However, with increasing populations and crowding, it becomes necessary to transport these wastes to larger facilities designed to accommodate and treat greater quantities of wastewater. This section discusses current wastewatee treatment technologies of potential use to densely populated areas of developing countries where a collective treatment facility is warranted.

The processes that take place in wastewater treatment may occur in a series of separate stages or may be incorporated into one or more stages. Okun and Ponghis, 1975, have broadly classified the various treatment stages into the following: Preliminary treatment, primary treatment, intermediate treatment, secondary treatment, and tertiary treatment. These shall be briefly discussed in terms of the processes occurring in each. However, it must be stressed that many of these stages are not necessary nor recommended for developing countries. Following this brief description, those technologies of relevance to developing countries shall be described in greater detail.

Preliminary treatment is performed initially to remove coarse solids from wastewaters and thereby prevent obstruction or damage to the workings of the treatment plant. Included in this process are screening, grit removal, and flotation. In those instances where wastes are being discharged directly into a large receiving body of water with only preliminary treatment, some form of disinfection is typically performed.

Primary treatment involves, basically, sedimentation. It is capable of a 35 percent BOD removal and 60 percent suspended solids removal when designed for maximal removal of settleable solids (Okun & Ponghis, 1975). This level is aimed for where no further treatment is performed.

Sedimentation is accomplished by a variety of methods including the sedimentation tank, the Imhoff Tank, and the stabilization pond. The latter two methods perform additional functions as well as sedimentation; the Imhoff Tank functions as a sludge digester and the stabilization pond is multifunctional and shall be discussed later in this section.

Intermediate treatment involves the use of chemical coagulants to improve solids removal in the sedimentation process. This method is more widely used in industrial nations where it provides certain advantages. However, the disadvantages of this process for developing countries include the following: the transportation time and costs of chemicals, the degree of sophistication required to properly handle the chemicals. the increased volumes of settled solids produced, and the increased difficulty in dewatering the solids produced such that they may be applied to the soil as fertilizer.

Secondary treatment, or biological treatment, is facilitated by microorganisms either aerobically or anaerobically. The microorganisms decompose or stabilize waste materials, initially by a transfer of organic compounds to the biomass. This biomass may be free floating, affixed to stones, or present in the interstices of soils and sands. The rapid transfer of organics to the microorganisms is followed by oxidation and subsequent utilization of the organic matter for the growth of new organisms.

Methods used for secondary treatment include intermittent sand filters, trickling filters, activated sludge, stabilization ponds, and oxidation ditches. Some of these methods are applicable to developing countries and will be discussed later in this section.

Tertiary treatment, or "advanced" waste treatment, provides greater removal of suspended solids and reduction of BOD than does secondary treatment. In general, the methods used require considerable sophistication in design, construction, and operation and are rarely performed even in developed countries. The treatment processes are primarily utilized for the removal of specific constituents under special conditions, such as intensive industrialization, high population density, and limited resources, at a high cost.

Conventional sewage treatment plants have not been detailed here; the emphasis is on feasible alternatives for rural areas and less developed urban areas. Although conventional treatment plants do exist in some developing countries, they are not viewed as the best alternatives for numerous reasons (Gloyna, 1971; Mara, 1977). These disadvantages include the following:

- The methods involve many stages.
- They require highly technical training of personnel.
- They require equipment that must be imported.
- They are not well suited to tropical climates (i.e. low-rate trickling infiltration).
- They are wasteful of water (a critical concern for many arid and semi-arid developing countries); and produce large quantities of sludge that must be treated before disposal.
- They are overall expensive to install and maintain, and therefore may only serve the wealthy.

Waste Stabilization Ponds

Waste stabilization ponds are generally the most highly recommended wastewater treatment methods for developing countries (Mara, 1977; Okun & Ponghis, 1975). The ponds are simple shallow earthwork basins requiring virtually no equipment and a minimum of material. Construction may be economically accomplished by hand where labor is plentiful, or with earth moving equipment where this is readily available. Additionally, waste stabilization ponds are the least expensive alternative for community wastewater treatment in developing countries with no compromise in effectiveness. In fact, these are the most effective alternative in terms of destruction of pathogenic bacteria and ova of intestinal parasites. Disadvantages associated with this process are that relative large areas of land are required and that, in cold climates, odors

are produced after freezing and thawing of pond surfaces. These drawbacks are insignificant in most developing countries.

The design of a waste stabilization pond is dependent upon the treatment objectives. Although the pond system is generally designed to receive untreated domestic or industrial wastes, it may also be designed to treat primary or secondary plant effluents, excess activated sludge, or diluted nightsoil. Additionally, ponds may be used to pretreat wastes, reducing BOD and populations of pathogens.

Many different names are commonly used for waste stabilization ponds, including sewage lagoons, oxidation ponds, redox ponds, maturation ponds, facultative lagoons, anaerobic lagoons, aerobic stabilization ponds, and mechanically assisted oxidation ponds. For the purposes of this manual, the following definitions provided by Gloyna (1971) will be used:

"The term waste stabilization pond is used to describe any pond or pond system designed for biological waste treatment. A pretreatment anaerobic waste stabilization pond is essentially a digester that requires no dissolved oxygen, since anaerobic bacteria break down the complex organic wastes. An aerobic waste stabilization pond is one in which aerobic bacteria break down the wastes and algae, through photosynthetic processes, provide sufficient oxygen to maintain an aerobic environment. A facultative waste stabilization pond is one in which there is an upper aerobic zone (maintained by algae) and a lower anaerobic zone. Aerobic, facultative, and anaerobic organisms might be found in a facultative waste stabilization pone. A mechanically aerated waste stabilization pond is one in which mechanical aerators either supplement or replace algae as a means of providing the required dissolved oxygen. This type of pond may function as an aerobic or facultative system. In some mechanically aerated ponds the turbulence may not be sufficient to keep all solids in suspension; therefor, sludge may settle and undergo anaerobic decomposition while most of the pond remains aerobic.

"Ponds receiving untreated wastewaters are referred to as raw or primary waste stabilization ponds. Ponds receiving effluents from primary settling tanks or secondary biological treatment units are called secondary waste stabilization ponds. Similarly, a second or third pond in a series of ponds functions as a secondary facultative or aerobic treatment unit. A pond whose primary function is to reduce the number of disease causing microorganisms through extended detention time is called a maturation pond. A maturation pond may also be used to rear fish such as carp and it may then be termed a fish pond. The physical layout and mode of operation can also be used to categorize a pond system. Ponds may be designed to operate singly, in series, or in parallel.

"Most waste stabilization ponds, as at present used, are facultative treatment units. In this respect, they resemble rivers and lakes. Aerobic conditions are maintained near the surface and sometimes throughout most of the depth of the pond. However, an anaerobic environment persists near the bottom, where there will always be some settled organic debris."

Mara (1977) recommends a number of these methods in particular combinations as being most suitable and effective for developing countries. These include facultative ponds, maturation ponds, anaerobic pretreatment ponds, high-rate ponds, and mechanically aerated ponds (aerated lagoons). Additionally, he recommends oxidation ditches. All of these types of installations will be discussed here.

Facultative waste stabilization ponds are, as previously mentioned, the most widely used type of installation. Facultative pond depths are typically 1-1.5 meters. Shallower depths are not recommended since aquatic plant growth, and therefore mosquito breeding sites, cannot be prevented. Furthermore, depths greater than 1.5 meters promote excessive anaerobic conditions.

Facultative ponds may, depending upon the sequence in which they are used, require periodic desludging. This may occur every 10 to 20 years. Regular maintenance requirements are simple yet critical to proper pond operation. These include cutting of grass on the embankments and removing of scum from the surface of the pond. Although these operations are clearly simple to perform, training of operating personnel in the principles of operation and to recognize malfunctions is critical.

Maturation ponds typically follow facultative ponds in series. They are completely aerobic and their primary function is the reduction of fecal bacteria and the general control of final effluent quality. This control is governed by the size and number of maturation ponds. Optimal detention times vary with environmental conditions, however, minimal requirements are five to seven days (Bradley & Alvares Da Silva, 1976). Each pond is capable of a 90 percent to 95 percent reduction in fecal coliform numbers (Mara, 1977). The depth of a maturation pond may be as much as three meters, however, 1-1.5 meters is recommended for maximal removal of enteroviruses (Mara, 1977).

Anaerobic ponds are typically loaded with strong organic wastes and large populations of anaerobic organisms which quickly deplete all oxygen available in the influent. They are most useful for the treatment of strong organic industrial or agricultural wastes and as primary units followed by facultative and maturation ponds.

Anaerobic ponds are highly efficient in BOD removal and therefore reduce the total land required for a treatment facility. However, they require increased maintenance, i.e., they must be desludged more frequently than facultative ponds (3-5 years as opposed to 10-20 years). A potential problem associated with anaerobic ponds is odor production. This may be avoided, however, by proper design and maintenance of a proper volumetric loading (Mara, 1977).

High rate ponds are considered to be potentially beneficial for developing countries, however, at present, they are still used only experimentally. They are designed to receive high loadings of previously settled sewage and ultimately to convert the organic matter to protein, in the form of algal cells. These algae must then be harvested and used as feed for animals. The principles behind this method appear to satisfy numerous problems simultaneously. However, as yet, the process has not been adapted for practical use, primarily due to difficulties in harvesting the algae at reasonable cost (Mara, 1977).

High rate ponds are shallow in depth (20-40 cm) and therefore the photic zone extends to the bottom. Stabilization occurs rapidly, requiring only one to three days detention time.

Gloyna (1971) indicates that mechanical aeration provides a low-cost treatment alternative when waste loads increase, space is limited, and high quality effluents are required. In these ponds, aerobic and facultative organisms are supplied with oxygen by mechanical aerators (typically surface-type units). During this treatment process waste materials are rapidly converted to bacterial cells. These must be removed from the effluent, either by a series of maturation ponds or by conventional sedimentation tanks followed by aerobic sludge digestion.

Mara (1977) recommends preliminary treatment before entrance into the aerated ponds. Additionally, he suggests the system is most efficient when maturation ponds follow, in series, the aerated pond. If the sedimentation tank and sludge digester are chosen, however, he recommends using the oxidation ditch, rather than the mechanically aerated pond, since smaller quantities of highly mineralized sludge are produced by the former.

Clearly the aerated lagoon requires greater construction and maintenance inputs than do the previously described types of stabilization ponds. Depths are typically three to four meters and the bottom must be lined such that the aerator does not destroy or erode it. Mara recommends the use of either butyl rubber; masonry, or mass concrete as lining materials. Additionally, a reliable source of electricity with backup must be available to power the aerators. Training of personnel must, of course, be more extensive than with simpler types of ponds.

The oxidation ditch functions similarly to the aerated lagoon in that the oxygen is supplied by mechanical aeration and the resultant biological activities are similar. However, the oxidation ditch system is more complex, more costly, and requires a much higher degree of skill in its operation. The principal advantage of this system is that the sludge is recycled through the system. This provides three major benefits: the waste is oxidized more quickly, the sludge is more thoroughly stabilized and ready for drying, and less sludge is ultimately produced.

Oxidation ditches are long continuous channels 1.5-2 meters deep. Rotors maintain constant mixing within the ditches. Preliminary treatment is recommended (Mara, 1977). Operators must not only maintain the mechanical and electrical equipment in perfect operation, but must also control the suspended solids concentration by diverting the return sludge flow to the sludge drying beds on a daily basis. Additionally, the frequency at which this must be performed is determined only through monitoring of levels of suspended solids in each individual ditch (Mara, 1977).

The waste stabilization pond system may be comprised of one pond only (typically facultative) or, most frequently, of a number of ponds in sequence. As indicated in Exhibit 2, anaerobic and facultative ponds may be aligned either singly or in parallel. Where a higher degree of treatment is required, maturation ponds are added following facultative ponds. Also indicated are systems whereby wastes from aqua privies, mechanically aerated aerobic ponds, or primary or secondary biological treatment are further treated in facultative ponds.

Gloyna (1971) has provided a listing of suitable treatment alternatives for different waste characteristics. These are summarized in Exhibit 3.

Assessment and Planning Factors

Suggested methods of minimizing mosquito breeding through the design and control of construction features include: (a) designing the pond so as to permit complete water-level control and drainage, (b) clearing vegetation from the bottom before filling, (c) levelling the bottom, (d) designing the pond to hold water by artificially sealing the bottom with chemicals, clay, or other materials, and (e) proper maintenance of the embankment slopes.

It is desirable to erect some type of fence around the waste stabilization ponds. Signs describing the facility should also be displayed.

A certain number of hand tools are required, and the operator to whom they are supplied should be responsible for their proper use and maintenance. Hand tools that might be most useful include lawn mowers, barrows, saws, claw hammers, measuring tape, pliers, screwdrivers, wirecutting pliers, metal

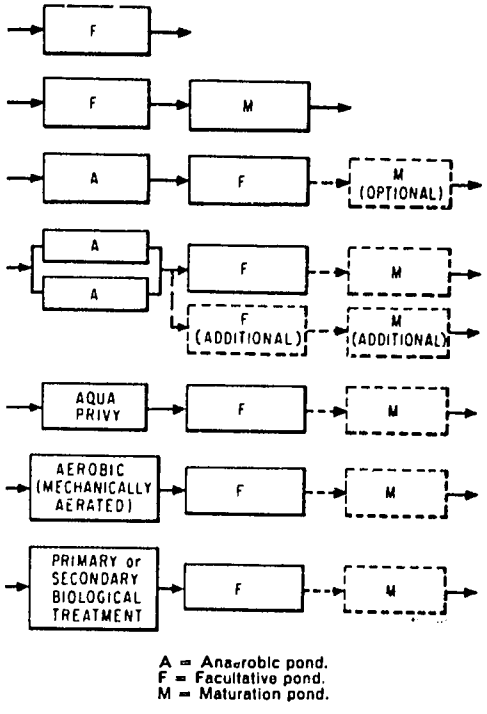

Exhibit 2 A number of typical waste stabilization pond systems (Gloyna, 1971) p. 58

Exhibit 3

Treatment Alternatives

Waste Characteristics	Suitable Treatment Processes
High solids content (i.e., nightsoil with minimum water added)	a. A + F b. A + F + M
Water-carried waste (domestic only)	a. A + F + M b. F c. F + M
Water-carried waste (domestic and industrial	a. A + F + M b. F c. F + M d. MA + F + M

A = anaerobic pond
F = facultative pond
M = maturation pond
MA = mechanically aerated pond

shears, pipe cutters, pipe seamers, pipe wrenches, pipe vices, grinding wheels, and scrubbing brushes.

For some facilities it may be desirable to provide a portable petrol-driven pump, light and heavy duty hoses, a portable insect spray applicator, a small rowing boat, grease guns, suitable grease and oils, a supply of paints, and a stock of certain spare parts that are not readily obtainable.

Provision should be made for determining the volume and BOD concentration of the waste water in a waste stabilization pond. For large facilities, routine flow and analytical measurements should be made. Flow measurements are needed to determine the most efficient mode of operation and to provide data for future additions to the treatment plant. Periodic measurements indicating the influent and effluent concentrations of BOD and coliform organisms are desirable. These tests can be carried out by inspectors sent from a central laboratory.

Additional measurements that might make for better control and more efficient operation include: (a) diurnal pH and oxygen fluctuations in the ponds, (b) pH of the influent and effluent, (c) total solids, suspended solids, and volatile solids in both influent and effluent, (d) total organic nitrogen, ammonia, nitrates, and phosphates in the influent and effluent, (e) oxidation reduction potential in the various ponds, particularly in the anaerobic pretreatment unit, (f) detailed chemical analyses of either the influent or the domestic water supply, (g) chemical oxygen demand, particularly if industrial wastes are involved, (h) ultimate BOD, (i) sulfate ion content of influent waters, and (j) the biochemical degradation rate K_T for various temperatures. Obviously, not all of these measurements are necessary for the operation of small or medium-sized facilities, but the list illustrates what might be desirable for the best management of larger and complex facilities, including research establishments.

Control of insects is important. The degree of mosquito infestation in ponds is in direct proportion to the extent of emergent vegetation. Both Culex and Anopheles larvae have been found in poorly operated ponds. If water is available, the ponds should be filled immediately to operational levels to discourage the growth of vegetation. Undesirable vegetation in the ponds or on the dikes must be eliminated periodically by cutting or by using a suitable herbicide. The cut plants must not be permitted to float on the pond, for this will provide shelter for mosquitos. Similarly, water-loving trees such as willows and poplars should not be planted around the ponds.

Larvicidal measures should be undertaken if significant mosquito breeding takes place. The following larvicides have been used effectively in some ponds: a thin layer of kerosene or diesel oil, two percent DDT and oil, lindane dust (3% gamma isomer), and 2 percent malathion. Caution should be exercised when using these substances, for excessive use may produce harmful effects on receiving watercourses.

The introduction of top-feeding minnows (Gambusia) to secondary or tertiary ponds is another effective way of controlling certain larvae. Other fish, such as Tilapia mossambica and T. melanopleura, and the guppy (Poecilia reticulata) have also been used successfully for the control of mosquitos in maturation ponds and some underloaded facultative ponds.

The heavy scum layers that may form on anaerobic ponds can be conducive to fly breeding. Both the common housefly, Musca domestica, and the filter fly, Psychoda, common in trickling filters, can breed in or around anaerobic pretreatment ponds and at the scum-laden edges of poorly operated facultative and aerobic ponds. One method of fly control is to break up the scum by frequent wetting. Fly-traps with poisoned bait can also be used around anaerobic pretreatment units.

Around anaerobic ponds, particularly those in which animal wastes are treated, flies can become a serious problem. The larvae of the common housefly, Musca domestica, and the biting stablefly, Stomoxys calcitrans, develop in most forms of organic sludge. Fortunately, the ponds themselves are not as attractive to the adults of these species, nor are there likely to be live maggots in well-managed anaerobic ponds, although Musca larvae and pupae may be contained in poultry manure and some adults may emerge if the manure accidentally floats to the surface (Hart & Turner, 1965).

Midges have occasionally created a nuisance. In New Zealand, the indigenous midge Chironomus zealandicus has caused considerable trouble when ponds were not loaded to the capacities for which they were designed. However, the midge population can be controlled by increasing the organic load on the ponds. Chemical control around the perimeters of the pond has also proved initially effective, although it has often been followed by the development of insecticide resistance.

Embankments should be inspected regularly for erosion due to wind, wave action, surface run-off, or burrowing animals. Any necessary repairs to the embankment must be made immediately after the damage occurs. The dikes should be seeded with grasses, fertilized and mown. Long rooted plants such as alfalfa should not be used because they may impair the water-retaining capacity of the dike.

Odors may arise from a number of situations. Frequently they are associated with the decay of mats of algae that have been blown to a bank or corner. Chlamydomonas, for example, can grow rapidly, spread over pond surfaces, reduce the penetration of light to the remainder of the pond, and with the assistance of the wind accumulate in the corners where it decomposes and produces vile odors. In other instances, particularly during periods of high water temperatures in shallow ponds, sludge mats rise from the bottom. These masses of organic debris usually accumulate in corners, and if it is not disturbed, the entire mass may become covered with blue-green algae. Usually the bacterial activity is intense and the odors are overpowering.

The solution to the mat problem is immediate dispersal. Agitation of the surface will usually cause the floating mass to break up and settle to the bottom. A jet of water from a garden or fire hose will normally create enough turbulence to achieve this. Another remedy employed by some is to use an outboard motor or an engine-powered paddle wheel to agitate the surface. Such devices have the advantage of flexibility in that they can be mounted on rafts and moved from place to place.

In all probability, an odor or a change in color is a warning of a major change in the performance of a pond system and operators should be alert to recognize such signs. Frequently, odors accompany illicit waste releases that cause a rapid change in the pond biology. Normally a maturation pond has a characteristic green color; the facultative pond most frequently appears green or brownish green, but may occasionally look quite pink or exhibit some other variation in color; the anaerobic pond looks greyish black.

When the characteristic green color of a pond begins to change or disappear, the operator should look for things that may be causing this. Changes in the volume, organic load, temperature, light, turbidity, etc. may cause changes in the existing algal pattern. A color change from green to black, accompanied by floating mats of material from the bottom of the pond, usually indicates rapid fermentation of the bottom sediments, frequently as a result of changes in pond temperature or in the character of the waste-water.

Occasionally ponds receiving either domestic or industrial wastes develop a pink color. This is sometimes occasioned by the development of colored

microorganisms, particularly in facultative ponds during the summer and autumn if the sulfide or sulfate concentration is high. Chief among the types that have been noted are Chromatium, Thiospirillum, and Thiopedia, but other small rod-shaped and spiral forms have also been detected. The larger microorganisms such as Chromatium and Thiospirillum are mostly restricted to ponds receiving typical municipal wastes, while Thiopedia rosea and smaller forms are likely to be present in ponds receiving industrial wastes. Generally these microorganisms are associated with waters that contain excess hydrogen sulfide.

The presence of such colored microorganisms seems to indicate some prior overloading, stratification, or operational deficiency. Invariably, a pond receiving industrial wastes that contain relatively large amounts of BOD and hydrogen sulfide or sulfates will support periodic blooms of these microorganisms.

Sulfides in a pond can be oxidized by colorless sulfur bacteria and by colored photosynthetic bacteria. The top layer of the pond, where both dissolved oxygen and hydrogen sulfide can occur, offer the best environmental conditions for the growth of colorless sulfur bacteria, but such bacteria are not often found in stabilization ponds, or occur only in rather small numbers. The oxidation of sulfides by colorless sulfur bacteria is therefore negligible compared with that by photosynthetic bacteria and by dissolved molecular oxygen. Photosynthetic sulfur bacteria are very often found in large numbers in stabilization ponds, particularly during the summer and autumn, and impart to the pond a characteristic brown or red color.

In all of these cases, the appearance of photosynthetic sulfur bacteria was accompanied by a reduction in hydrogen sulfide odors: for this reason these bacteria are sometimes referred to in the literature as "biological deodorizers."

In a comprehensive study of the activities of photosynthetic sulfur bacteria in waste stabilization ponds, Green (1966) found that the brown color sometimes imparted to the pond occurs when the concentration of sulfide in the pond is high and the photosynthetic bacteria store it as sulfur granules in the cell; when the sulfide concentration decreases and the sulfur granules are oxidized by the cell, the color imparted by photosynthetic sulfur bacteria is a vivid red. Because of their photosynthetic activity, these bacteria do not help to reduce the BOD of the wastes and may even tend to increase it (Green, 1966). It should be remembered that this photosynthetic activity does not produce any molecular oxygen.

Trees will interfere with the performance of the pond. Large trees will impede the natural wind action and may reduce the light intensity at the surface of the pond. Moreover, leaves falling into the pond will interfere with photosynthetic processes, add to the BOD load, and possibly create insect control problems. Wherever possible, large trees within 40 to 60 meters of the pond embankment should be removed.

The hydrodynamic and physical shape of a pond has a distinct effect on its performance. For example, surface aeration and photosynthetic oxygenation can be enhanced by both thermal mixing and wind action. Both forms of mixing are beneficial.

When the temperature is falling, mixing can occur without wind action. During periods of rising temperatures, however, wind action is required, and then stratification usually occurs. Dye tests have verified these observations. Wave action is determined largely by the fetch, i.e., the continuous extent of exposed water. A fetch of about 300 meters will usually ensure circulation and mixing to a depth of 1 meter.

Wastewater Disposal

Some streams may best be used for receiving wastewaters. While the stream water quality may be low, in no instance must it become a public nuisance, as would result, for example, from a complete disappearance of oxygen. Even to achieve this low standard will often require a high degree of treatment— in areas where water resources are limited, stream flows are low and wastewater loads are high.

The quality of the wastewater that can be discharged into a stream will be a function not only of this standard quality and the flow in the stream, but also of the ability of that stream to assimilate wastes and to purify itself. Streams, lakes, and oceans, when polluted with biodegradable organic wastes, may purify themselves naturally and return to virtually their original state if the amount of pollution is within their assimilative capacity.

When an organic waste is discharged into a watercourse, the turbidity of the water tends to increase. At the same time, the oxygen requirements of the wastes tend to reduce the oxygen content of the stream. This is maintained both by surface reaeration and by photosynthesis, the process whereby green plants and algae remove carbon dioxide from the water and supply oxygen to it. The increased turbidity interferes with the passage of the sunlight necessary for photosynthesis, so that the reaeration capacity of the stream is somewhat reduced. The wastewaters themselves may also interfere with oxygen transfer at the surface of the stream, thus further reducing reoxygenation.

The stream begins to recover when the rate of oxygen demand created by the wastes begins to be exceeded by the rate of reoxygenation; the latter is proportional to the DO deficit. High stream flows, turbulent flows, low temperatures, and a well balanced ecological system all tend to contribute to high assimilative capacity. If a stream is to be maintained for its designated use the year round, the critical period is during low flow periods in the summer when the assimilative capacity is lowest and the requirements are generally the highest.

Where waters are to be used for drinking, the coliform count is of interest. Conditions that make for high assimilative capacity with regard to BOD may be the very conditions that tend to preserve the coliforms, and with them any pathogens that may be present. Low temperatures and high velocities in a stream which provide a high assimilative capacity, may mean that viable organisms are carried to a downstream water intake in greater numbers than is the case where the water is relatively slow-moving and the temperatures are high, thus favoring bacterial die-away. Consequently, a stream pollution investigation aimed at determining the degree of treatment required cannot always be based on the same set of parameters, but must also take into account the purposes to be served by the waters in question.

While a large number of quantitative approaches have been developed for assessing the assimilative capacity of streams, from the point of view both of organic matter and microorganisms, these are seldom directly applicable to streams that have not previously been studied. Those responsible for studies of the assimilation capacity of streams must therefore initiate programs of data collection and comprehensive studies of water quality, and relate them to the pollution of the stream, so that the assimilative capacity can be determined by means of the formulae that have been developed. It is beyond the scope of this publication to describe the methods used for determining the assimilative capacity of receiving waters. A useful introduction to this subject is given by Fair et. al. (1968) and by Klein (1959-1966).

For the disposal of wastewaters into lakes and oceans, a somewhat different approach must be used because the dispersion of the effluents may be poor or highly variable and uncertain. Effluents tend to be less dense than lake waters or seawater because lakes are generally colder than wastewaters and seawater contains high salt concentrations. Wastewaters, therefore, tend to rise to and remain at the surface, where they cause the greatest nuisance.

Wastewaters should therefore be discharged at as great a depth as pssible, so as to promote mixing and dilution. Physical, chemical, and biological studies are often required in order to determine the assimilative requirements for the protection of the ecosystems. In addition to the conventional methods, radioactive tracers may also be used in large projects for studying dilution and dispersion. Graham and Valdes-Pinilla (1971) have described such investigations on the marine disposal of wastewaters from Manila.

Marine outfalls often constitute an economical means of wastewater disposal because the high dilution available and the lack of evidence of harm to health from bathing in polluted seawater reduce treatment requirements. Rawn et. al. (1961) have developed guidelines for the depth of discharge of an outfall in order to achieve desired dilution ratios. Even with adequate dilution, however, preliminary treatment, i.e., screening or flotation, is necessary to prevent floating solids from being blown on shore or fouling the water. Many successful designs of outfalls have been described (Pearson, 1960).

Experience with prolonged marine disposal of treated and untreated wastewaters has demonstrated serious adverse effects on the ecological balance of the marine environment. These long term consequences and current research in this area should be examined before using this method of disposal.

Wastewater Reuse

Wastewater reclamation has different meanings for different countries, depending on the particular needs or interests of the region concerned. For example, it may mean the use of wastewaters for irrigation, for culturing fish, for the creation of recreational facilities, for industrial use, or for groundwater recharge. These issues are of particular concern in areas where water and/or food are scarce.

Additionally, there may be economic advantages to be gained from the reuse of wastewaters. Clearly, the most efficient system for dealing with human wastes is one that incorporates reuse into it. However, as with all environmental issues, tradeoffs must be made, giving due considration to costs, technological feasibilities, cultural priorities, etc. This is clearly illustrated by the fact that although thorough treatment of wastewaters for unrestricted use would be acceptable in terms of health and environment, the costs of achieving that level of purification are prohibitive.

The reuse methods to be considered in the following sections include agricultural use, fish ponds, biogas plants, industrial use, and recreational use. Additionally, a final section will discuss handling and disposal of sludge.

The principal uses of excretary materials in agriculture are as fertilizer or as irrigant. Both have been practiced in many parts of the world for many years. Ideally, these methods provide optimal solutions for developing countries, returning nutrients to the soil, recycling wastewaters, and contributing to the production of much-needed food. However, these benefits must be weighed against the potential risks to the population of contracting any of the numerous communicable diseases known to be present in wastewaters. Direct application of human excrement to the soil presents definite public health

hazards. Most conventional treatment processes cannot completely remove pathogens from wastewaters, with the exception of highly complex and expensive processes. Shuval (1977), in a review of these issues, proposes a compromise whereby feasible technologies are used, however, effluents are only applied to certain types of crops, thereby reducing the potential public health risk.

Okun and Ponghis (1975) describe the differential standards recommended by the World Health Organization for agricultural uses of treated wastewaters. The following categories are differentiated in order of increasing quality requirements.

- Orchards and vineyards.
- Fodder, fiber crops, and seed crops.
- Crops for human consumption that will be process to kill pathogens.
- Crops for human consumption in the raw state.

Fish ponding with waste materials is widely practiced in Asia. Wastes including sewage, nightsoil, animal manure, and plant wastes are deposited in ponds as either pond fertilizer or fish feed. This method provides an effective means of utilizing valuable organics and other nutrients as well as an effective means of disposal and treatment. Numerous approaches are in practice in different parts of Asia. For example, in India, raw sewage is fed into fish farms; in China, Indonesia, and Malaysia, latrines are built directly over the fish pond; in Thailand, Taiwan, and Sri Lanka, nightsoil is collected by cart and transferred to fishponds (McGarry, 1977). Additionally, in many European countries, biologically treated sewage effluent is fed into fish ponds where fish culture becomes a form of tertiary treatment.

In spite of this widespread practice, the health consequences of eating the fish from ponds are not well understood. Where fish are eaten raw, certain parasites capable of existing in fish and other aquatic organisms as intermediary hosts are definitely a disease problem (McGarry, 1977). Further research is recommended before this method be applied in areas not already using it.

Biogas Plants

The biogas plant provides a relatively simple means of generating methane gas by fermentation of human and farm wastes. The process involves anaerobic digestion of the wastes and collection of the gases produced. Additionally, the solids, or effluent slurry may be used as soil conditioner or fertilizer.

Various types of materials may be fed into the biogas plant including nightsoil, animal waste, and vegetable waste. McGarry (1977) discusses the health and economic implications of the biogas plant. He indicates that the financial viability of the method has not yet been determined nor has its cultural acceptability. Nevertheless, it is fairly effective in destroying most pathogens. McGarry recommends this method as worthy of consideration for developing countries.

Imhoff tanks accomplish both sedimentation and sludge digestion in a single, two-story structure. They are widely used throughout the world, particularly in small communities. One reason for this is that operation and maintenance for Imhoff tanks is less complex and therefore less costly than many other methods. Imhoff tanks are well suited for use in warm climate countries where local temperatures facilitate the decomposition of waste matter. These systems cannot be heated and therefore may not function well in cold climate.

Among the few, yet important, maintenance requirements are cleaning of gas vents and removal of a certain percentage of the sludge periodically to reduce odors. Neither of these duties requires a high level of technical skill.

Wastewater treatment plant effluents may be used as industrial water supplies. Initially, such effluents were used in areas where other water

supplies were not available; their use was later extended to situations where effluents were cheaper than piped water supplies because of the close proximity of the wastewater treatment plant and the high cost of potable water.

Possible reuse of treatment plant effluents in industrial processes is limited by the following requirements. Adequate volumes of effluent must be continuously available. The effluent must be suitable in quality or the cost of the necessary processing must be less than that of treating alternative supplies. The use of wastewater in the process must not endanger public health.

Quality requirements in the reuse of wastewater in industry depend on the industry and on the specific use within the industry. For once through cooling, the requirements are the least stringent. Where wastewater is to be used in cooling towers, however, salts and nutrients may cause serious difficulties. Nutrients, in particular, encourage the growth of slimes, and large quantities of chlorine may be required to prevent clogging of the towers.

An additional requirement to be satisfied by wastewater for industrial use is that the quality should not be highly variable. An equalizer or storage basin for the treated wastewater can be used where the industrial demand varies; it will also smooth out variations in quality in the discharge from the treatment plant. Industrial requirements are generally so variable that special efforts to provide wastewater for industry should not be made until the specific industrial operation to be served has been identified.

Specialized treatment (activated carbon, electrodialysis, distillation or reverse osmosis) to remove refractory and inorganic materials should normally be provided by the industry concerned.

The quality required of a treated wastewater effluent will vary with the types of recreational activities to be performed and the size of the body of water into which it is discharged. Typically lakes are used for a variety of activities such as water-contact sports and boating and fishing. The wastewater used for these purposes should undergo primary and secondary treatment. Additionally, for water-contact sports, disinfection may be required.

Sludge Handling and Disposal

Sludge, composed of solids removed from wastewater through treatment plus any water entrained with those solids, accumulates to varying degrees with different treatment processes. If a method of treatment is chosen, or already is in existence, which produces large quantities of sludge, these must be handled (i.e., dewatered, destabilized), and disposed in some manner.

Accepted methods of sludge handling include concentration, digestion, dewatering, drying, and incineration. Initial handling may involve either concentration or digestion, followed by dewatering, drying, and/or incineration. Digestion followed by air drying on sludge drying beds has been recommended for use in developing countries (Okun & Ponghis, 1975). Additionally, lagoons are recommended for drying (drying lagoons) or for ultimate disposal of predigested sludge (Okun & Ponghis, 1975).

There are numerous technologies available for sludge handling and disposal. Examples of these include vacuum filtration, solid drying beds, filters, filter presses, and centrifugation. Those methods and others are extensively described in Treatment of Sludges by Vesiland (see Recommended Resources). The ultimate disposal of sludge should minimize both environmental and health hazards. Alternatives include disposal in permanent lagoons, sanitary landfills, or as soil builder.

References and Additional Reading:

Farallones Institute. Composting Privy (Technical Bulletin No. 1). Occidental California, 1974.

Gloyna, E.F. Waste Stabilization Ponds. Geneva: World Health Organization, 1971.

Laurence, B. R. "Insect breeding in relation to sanitation and waste disposal." (pp. 284-296) Feachem, R., McGarry, M., and Mara, D. Water, Wastes and Health in Hot Climates. London: John Wiley and Sons, Ltd., 1977.

McGarry, M.G. "Domestic wastes as an economic resource: Biogas and fish culture." (pp. 347-363) Ibid

McGarry, M.G. "Waste collection in hot climates: A technical and economic appraisal." (pp. 239-263) Ibid

McGill University, School of Architecture. Stop the Five Gallon Flush. Montreal: Minimum Cost Housing Group, 1973.

Mara, D. D. "Wastewater treatment in hot climates." (pp. 264-282) Feachem, R., McGarry, M., and Mara, D. Water, Wastes and Health in Hot Climates. London: John Wiley and Sons, Ltd., 1977.

Metcalf and Eddy. Water and Wastewater Treatment.

Okun, D.A. and Ponghis, G. Community Wastewater Collection and Disposal. Geneva: World Health Organization, 1975.

Shelat, R. N. and Mansuri, M.G. "Problems of village sanitation in India." (pp. 312-319) Feachem, R., McGarry, M., and Mara, D. Water, Wastes, and Health in Hot Climates. London: John Wiley and Sons, Ltd., 1977.

Shepard, M. "Helminthological aspects of sewage treatment in hot climates." (pp. 299-309) Ibid

Shuval, H. I. "Public health considerations in wastewaters and excreta re-use for agriculture." (pp. 365-380) Ibid

Stander, G. J. and Clayton, A. J. "Planning and construction of wastewater reclamation schemes as an integral part of water supply." (pp. 383-392) Ibid

United Kingdom, Department of the Environment (1972) Analysis of raw, potable and waste waters. London, H. M. Stationary Office.

Vesilind. Treatment of Sludges.

Wagner, E.G. and Lanoix, J.N. Excreta Disposal for Rural Areas and Small Communities. Geneva: World Health Organization, 1958.

Water Pollution Control Federation (1968) Simplified laboratory procedures for wastewater examination, Washington, D.C. (Publication No. 18)

CHAPTER SEVEN

FINANCING WATER PROGRAMS

In general, the operation and maintenance of drinking water and wastewater systems is financed from income generated by those who use the systems and/or through government subsidies. This section will deal first with financing for the maintenance and operations of water systems and then with sources of funds for planning and design of water supply and wastewater systems.

Community water supply programs in general can be totally or partially financed with locally generated funds. Since these programs distribute a commodity that can carry a price, if the fiscal management is sound such a program can usually meet the cost of operation, initial capital costs and the costs of capital expansion as the system grows. In contrast, the collection, treatment and disposal of wastewater do not involve the distribtuion of a product, but instead represent a service. Thus financing the operations of wastewater systems is more difficult.

Wastewater collection and disposal are not given high priority in the allocation of funds to public services. Water supply systems and other revenue-producing investments are preferred. Yet, as previously mentioned, water supply systems in the absence of appropriate excreta disposal programs can increase the health hazards to a community. Financing is required for all phases of a wastewater disposal project: conception, design, construction, and operation. The required feasibility studies, engineering, inspection, consultation, etc. are often best financed through a package that includes several financing sources.

A community with a water supply and/or wastewater system can attract new industries, commercial enterprises, tourism, and new housing developments. This increases the general economy and employment possibilities that benefit the entire population of the community. Thus, it might be argued that all taxpayers benefit even though the systems may serve only a part of the community. But complete equity in discerning the cost of providing the use and benefits of the works to each resident is seldom possible.

In the case of water supply systems with community taps or home taps, charges proportional solely to the amounts of water used are most equitable. Historically sewerage systems were paid for from general taxation. However, as wastewater collection systems have gained recognition as services to individuals as well as community responsibilities, a wider range of financing programs has been used.

A balanced program might incorporate three types of financing simultaneously: special assessments, taxation, and service charges. Special assessments are made against property owners who are adjacent to and who will benefit from lateral sewers. General taxation for the stormwater portion of combined sewers as well as for a proportion of the total cost of the system that can be said to benefit the community as a whole is common. Service charges, based on dwelling units, water use, number of water fixtures or some other appropriate

measure, for wastewater collection and disposal from households and establishments is another common method.

This array of financing devices may be necessary in large cities where a wide range of industries and households are served. But, in smaller communities a single financing system that is simple in character and consistent with government practices will suffice.

Hazen (1968) has summarized the factors favoring each of these types of financing. In the frontage assessment system for laterals the property owner pays directly for having a sewer in the street to which he can connect his property if he so desires. The ability to connect is a convenience to the owner. It is worth a great deal and adds substantially to the value of his property.

Assessments based on frontage reflect not only the actual cost of the sewer installed, but also the owner's ability to pay. The wider the plot of land, presumably the better able the owner is to pay for the service. The assessment places the burden on the newcomers to the city who need the facilities, and not on those who may already have paid taxes over many years for citywide sewerage facilities. This is significant in the extension of existing systems but may be of little importance where a complete sewerage system is to be constructed at one time.

Factors favoring ad valorem taxes on all property exist when adequate sewerage and sewage disposal is a "public necessity." All property owners benefit from the existence of a sewerage system, even if they are not connected immediately. These benefits are twofold: (1) real estate values are greater in cities with sewers and other utilities, than in cities without these services. The mere existence of sewers will enhance the market price of property; (2) the householder who installs a connection to the sewerage system and gets rid of an unsanitary and inadequate privy, cesspool, or septic tank, may help his neighbor as much as he helps himself.

In most communities, especially those without wastewater treatment, the cost of sewerage is a function of the construction cost, not of the quantity of sewage flow from each house. The costs per house throughout the city are normally comparable, or at least of the same order of magnitude. Persons with large houses or large plots of land are normally better able than their poorer neighbors to pay more for sewerage. If ad valorem taxes are already collected for other municipal purposes, the tax rate need only be increased to provide the necessary sewer revenue, without separate billing and collection. State or federal grants in aid of sewer construction may be applied directly to reduce local costs without questions being raised as to equitable apportionment.

Factors favoring service charges to users exist where a service charge is already being made for water, increasing the rate by a fixed percentage for sewer service is simple and relatively "painless." Borrowing against this type of assured income is generally easier. In addition, service charges are particularly appropriate for meeting operation and maintenance costs, as both these costs increase approximately at the same rate as the population served.

Because service charges are likely to be widely adopted for meeting at least a portion of the costs of wastewater collection, treatment, and disposal, some further information on this type of financing is given here. Service charges are intended to recover the costs of the system from those users who benefit directly from it. The costs of providing benefits to the local community as a whole from improved sanitation or to a downstream community adversely affected by polluted receiving waters are more difficult to measure and, with currently available institutional arrangements, often difficult to recover.

Where water supply is metered and where the water and sewerage agencies are under the authority of the same government department, an increase in the water rate is easy to impose and to collect, and is generally fair. Failure to pay may be met by cutting off water supplies. Such dual dependence on the water meter may encourage better programs of meter reading and meter maintenance. This system may be inequitable where a substantial fraction of the water is used for sprinkling lawns or vegetable gardens. Such practices will often prevail over a well-defined area, and special allowances can then be made, based on the area watered. Another type of inequity may result where a large commercial or industrial user possesses a private water supply, but makes full use of the sewerage system. Metering of the private supply would then be appropriate.

The strength of the wastewaters from ordinary households can be expected to be fairly constant, so that the measurement of volume will be sufficient. However- with certain commercial and industrial establishments, such as laundries, dairies, food processing plants, tanneries and the like, the volume of the wastewater is not a true measure of the burden placed on the treatment plant. An additional charge to allow for the increased cost of treatment, as measured by solids and/or BOD, may then be appropriate. This charge can be based on selected samples collected on a 24 hour basis several times a year, or on known relationships between pollution load and output, or an intensive survey may be carried out and the annual charges determined in the light of the information obtained. (American Public Works Association, 1955)

In the absence of meters, a flat annual charge per dwelling unit or based on the number of water closets, sinks, bathrooms, or a combination of these fixtures in a house is useful. The volume of wastewater to be discharged can be expected to be approximately proportional to the number of drains provided.

A special method of charging appropriate to the circumstances may be adopted in each individual instance. The method should be equitable but above all, simple, to ensure a high rate of collection. In the few instances where low-income residents cannot be expected to pay a service charge but where community sewerage is provided, some government agency should pay for the sewerage on behalf of these residents. This agency may be the housing authority, or the welfare agency, or the municipality itself, even if the sewerage is under the jurisdiction of the municipality.

Local regulations for municipal borrowing vary from country to country. Bonds are widely used in industrialized countries, but less so in developing countries. Where used, three types of bonds may be sold when a municipality or other local uthority seeks to borrow money on the open market. The main types of bonds are assessment bonds, obligation bonds, and revenue bonds.

The special assessment bonds are short-term bonds designed to permit borrowing for a specific project serving only part of a community, such as lateral sewers that serve only the houses on a particular street. General obligation bonds are backed by the full faith and credit of the community, income generally being derived from ad valorum taxes on the property of the community. When the bonds are to be repaid over a period of years, they are called serial bonds. Revenue bonds are based on repayments earned from service charges paid by those who use the service.

The interest rates and the terms of loans, particularly general obligation bonds, depend on the financial status of the borrower. If a community or a nation has many debts outstanding and limited resources, the interest

is likely to be very high, if a loan can be generated at all. The interest rate for revenue bonds depends, not on the indebtedness of the community, but rather on quality of project management. If it can be assumed with some confidence, based on previous experience with the community concerned or with the administrative practices of the country, that the project will be operated on a sound fiscal basis, the interest rate for revenue bonds may be low. If the fiscal integrity of the project is uncertain, the interest rate may be very high indeed. In general, the poorer communities have to pay the higher interest rates and can only obtain short-term loans. The desirability and necessity of high-quality management personnel becomes clearer when it is realized that it affects both the ability to borrow and the cost of borrowing.

For small communities in developing countries, capital costs are best met from loans or grants paid for out of the general taxation, either of the community or the nation, whereas operation and maintenance charges are best met by revenues collected from those actually using the system. The philosophy of this approach is that the capital works, including the main trunk sewers, pumping stations, treatment plant, and the like are constructed to serve not only those immediately connected but also those to be connected in the future. The entire community should therefore be charged for this investment for the future. The operation and maintenance costs, which need to be met both to preserve the capital investment and to serve those using the system, are appropriately met by the latter.

One type of financing may be used when the project is initiated and replaced by another over the years as the system is enlarged. During the early years, the capital costs may be met entirely from loans or grants charged against local or national taxation or even from international borrowing. Operation and maintenance costs may be met from revenue. However, as the number of users of the system increases, the revenue will increase and it will become possible to meet some of the fixed charges from revenue as well. If the project has been properly planned, a point should be reached where income will be adequate to meet all the annual charges and to generate a surplus that can be used for further extension of the system.

After a sewerage system with street laterals has been installed, householders may be reluctant to invest in connections. In small communities and in the poorer sections of large communities in developing countries, the cost of such connections may be high with respect to the value of the house to be connected. Yet it is just these houses that most need to be connected. The establishment of a revolving fund may provide the necessary encouragement, since such a fund gives householders an extended period in which to repay the cost. A system of partial grants towards the cost of house connections would provide an excellent incentive for the householder.

Early connection to a system on the part of the entire population accessible to it is important not only for sanitary reasons, but also because it will provide the income from service charges necessary to keep the project economically viable. The promise of 100 percent house connections is important to the lending agencies.

Wastewater collection enjoys a higher priority than wastewater treatment, as the health status of a community is improved even if the collected wastewaters are discharged untreated into a receiving stream or the ocean. If the receiving stream is large, or if the water below the community outfall has no immediate beneficial use, the priority given to wastewater treatment will be even lower. A further difficulty is that the direct benefits from treatment are often obtained downstream by communities other than those that pay for it. With many pressing and competing needs for funds, treatment has a low priority in a situation where little local benefit accrues from it.

Industrialized countries have just begun to give serious attention to the problems of stream pollution, and many schemes are being used and proposed to promote the construction of treatment plants and provide sound methods of training. This problem will not be discussed in detail here, however, relevant references to these techniques are found in the Recommended Resources.

Funding Capital Costs

Sources of funds for the capital costs of engineering and construction of drinking water and wastewater systems may be public and private and can come from local, national, or international sources. Frequently it is necessary and desirable to finance projects through the use of more than one of these sources. The financing of projects in developing countries is markedly different from borrowing in industrialized companies. As previously mentioned local funds are limited, interest rates are high, rapid repayment is necessary and almost always there is an unfavorable balance of payments. Some equipment, supplies and personnel have to be brought in from industrialized countries in many cases, thus obtaining ready currency on favorable terms becomes a major problem.

Local financing may be accomplished in two ways: through the sale of bonds or the local direct contributions of labor and materials. The sale of bonds requires repayment that depends on local taxation and income generated by the project. In small communities selling bonds at reasonable interest rates may not be feasible. Financing through local contributions of labor and materials is one of the most effective means of achieving local participation and community cohesiveness. The construction of these systems is labor-intensive work that can be carried out with local labor if supervision is adequate. Where other necessary funds for a community project are to be obtained from a national source through loans or subsidies, an important consieration in establishing the priority to be given to such contributions is the extent of local participation. A community that is well organized and prepared to contribute a substantial portion of the total cost of its project is more likely to obtain the best possible terms and most favorable rates for borrowing funds.

In most developing countries, the financing of community wastewater and drinking water projects in most developing countries depends upon a national initiative in the form of subsidies or of loans. In general, the outright subsidy or grant is less satisfactory since it does not ensure continued support for an ever growing program.

National development banks may extend credit to local or provincial agencies for drinking water or wastewater projects. The development bank may extend credit for a portion or the total cost of the work, generally at relatively high interest rates and over short periods because of the local financial situation. In turn, the development bank may obtain its funds from international agencies or through bilateral loan agreements with industrialized countries at lower interest rates and extended over longer periods. The profit from these loans will help to increase the resources of the development bank and enable it to accelerate the construction program.

It has been recommended that countries in process of development interested in international loans for their water programs should apply for loans up to the amount of the external components of their individual projects if they want to follow a healthy financial policy (Hernandez, 1966). To use foreign exchange to pay the costs of local labor and materials is generally inappropriate and uneconomic, as public projects, such as water supply and sewerage, generate little revenue that can be used for repayment.

However, when international loans are available for financing sound water supply and wastewater projects, interested countries may be justified, under special conditions, in financing as much as possible of the project with such a loan in excess of the external component of the project that has to come from abroad. This constitutes an important secondary benefit of such projects to economic development, on the assumption that the country's international financing policy is a wise one.

Funds from international sources are generally not as readily available for wastewater projects as for directly productive projects that can add to the economic resources of the borrowing country, or for infrastructural projects that may lead to improved economic standards that in turn may assist in the development of productive projects. Another important factor in determining the availability of loans is the ability of the borrower to repay them; this in turn depends on whether the administrative and fiscal practices of the borrower are sound or not. Bilateral loans from industrialized countries may be an exception to this rule, however, where the social value of a project is clearly established and such assistance is consistent with the foreign policy objectives of the lending country.

One of the main objectives of all international assistance programs is so-called "institution-building." Training of local staff often is, or should be, explicitly provided for in loan and grant agreements. This training can be provided on the job but, for key engineers and administrators, specialized postgraduate educational program designed for personnel from developing countries should be used. The International Courses in Hydraulic and Sanitary Engineering at Delft, Netherlands, and the International Program in Sanitary Engineering Design at the University of North Carolina, among others, have provided such specialized training.

Since foreign aid policies vary from country to country, and are highly fluid, such policies cannot be discussed in any detail. Many industrialized countries plan to use their national resources for assisting developing countries through contributions to established international lending agencies such as those mentioned below. Drombach (1971) has reviewed the relationship between foreign aid and water supply and sewerage projects.

The World Bank (International Bank for Reconstruction and Development) and its associated International Development Association, are possibly the most active in making loans for wastewater collection and disposal. A questionnaire developed by IBRD is given to all organizations seeking loans or credits for sewerage projects. Although the purpose of the questionnaire is to provide guidance in preparing feasibility reports for the World Bank, the information requested is much the same as that required by any of the other international loan agencies. The IBRD has an excellent staff of sanitary engineers and economists who can assist in developing and evaluating projects.

The current interest rate on World Bank loans (February 1974) is 7.25 percent on the disbursed balance of the loan, with an annual commitment charge on the undisbursed portion of 0.75 percent. The interest rate charged by the Bank varies from time to time, depending upon the cost of current borrowings. A grace period (during which repayment of principal is not make) is granted for the construction period plus a certain time thereafter, usually six months to one year. Interest is payable during the grace period either from the loan account itself or by the borrower from his own funds. The loan amortization period depends on the individual project, but has customarily been from 15 to 30 years for water supply and sewerage projects.

The Bank usually limits its loans to the foreign exchange costs of the project. These are normally defined as the costs of foreign goods and services

directly imported for the project and the foreign currency costs of locally provided goods and services to the extent that these costs can be readily ascertained. Local currency costs may be financed in special cases, as determined by the economic requirements of the country and not by the project needs. Funds may be made available in various currencies and must be repaid in the same currencies. However, as far as the project is concerned, the funds are available in "hard" currencies and must be repaid in such currencies.

IDA finances the same general types of projects as the Bank, selected according to the same standards, but on terms that place a much lighter burden on the balance of payments of the borrowing country. The development credits extended by IDA to date have been for a term of 50 years, with a 10 year initial grace period. There is no interest charge, only an annual service charge of 0.75%. These favorable terms are available only to the country; the funds are loaned to the project by the country on terms similar to those for conventional bank loans.

Regional Development Banks include the Inter-American Development Bank, which has the longest history in this class, the Asian Development Bank, and the African Development Bank. The offices of the Inter-American Development Bank are staffed with qualified engineers at the headquarters in Washington, D.C. and in each country of the Americas. Loans are made to Member Governments, their political subdivisions, and private entities. Loans are made for specific projects, including projects that are parts of national or regional programs. The Bank may also make or guarantee loans to national development institutions to permit them to lend smaller amounts to communities within the country. Repayment of loans from Ordinary Capital Funds must be in the currency lent, which is generally U.S. dollars; in general, lending policies are not unlike those of IBRD. The Bank fund for special operations, the Social Progress Trust Fund, begun in 1961, provides special resources for projects in the fields of education and health, including water supply and wastewater collection and disposal, which can be repaid in local currency.

Up to 1969, $452 million in loans had been made for water supply and sewerage projects costing, in all, some $1000 million. Of a total of 1641 systems assisted by the Fund, up to 1968, only 99 were for wastewater collection, although the proportion of such systems is increasing (Inter-American Development Bank, 1969). Loans may be made to national governments either through their national banks, which finance a wide range of projects, or through specialized banks or funds. One successful technique has been a "revolving fund;" this is initially created by a bank contribution to the central government and is kept operating through repayment of loans and the accumulation of interest from each loan. Such a revolving fund provides a sound basis for applications for loans by the national government to bilateral or international agencies interested in supporting such projects.

The Inter-American Development Bank can make combined loans from its Ordinary Capital and Special Operations Funds for water and sewerage projects in accordance with the economic status of the population concerned. It generally finances 50 percent of the cost of a project, including the whole of the external component and some of the local component. It also makes pre-investment loans for water and wastewater projects that are to serve as a basis for subsequent construction loans.

The United Nations Development Program finances pre-investment studies for research and development, for institution building, and for training projects in many fields, including water supply and wastewater disposal. If governments desire, WHO will help to prepare requests to UNDP for such financing of activities for which it is responsible, but the project document itself

must always be submitted by the government concerned and meet the relevant UNDP conditions. If the request is approved, the funds are made available, usually subject to the appointment of an international agency as "Executing Agency;" in the case of water supply and wastes disposal projects, this is normally WHO.

Depending on the priority given to the project and its size, and whether or not it has been included in the overall country program of UNDP assistance, approval may be given by the Administrator or Assistant Administrators of the Program. Government counterpart contributions are usually called for whenever UNDP financing is provided. These may be in kind— e.g., the provision of local staff, office accomodation, transport, and locally available equipment and materials— and sometimes in cash in the local currency.

In general, pre-investment studies carried out with UNDP funds do not include detailed final engineering design or construction works. The objective is to produce a "bankable" project that will attract investment from an international, regional, or bilateral source. The Executing Agency will, if so desired, assist governments in obtaining loans for construction purposes, and the lending agencies themselves welcome the pre-investment studies as a basis for loan agreements, particularly in countries where experienced engineering consultants are short and outside expertise has to be called upon.

Where WHO has been appointed the Executing Agency for a UNDP-assisted project, the pre-investment survey is normally entrusted to a firm of internationally experienced consultants, slected from a list previously cleared by the government concerned. These consultants may include engineers, management specialists, economists, hydrogeologists or such other specialists as may be called for by the nature of the project. Their terms of reference are derived from the approved government request (Project Document) to UNDP, which in turn may have been prepared with the assistance of a WHO team consisting of an engineer, an administrator, an economist, and any other specialists appropriate to the problem. Such a team may be financed by WHO or UNDP, but the government normally provides such facilities as office accommodation and transport, and at times, secretarial services.

International banking agencies, in coming to a decision on the granting of a loan, are likely to be influenced not only by the desirability of the project and the efficiency of its design, but also by the institutional arrangements made for its future management, by the financial arrangements made for its future management made for loan repayment, and also by the experience of the undertaking or organization in servicing and repaying similar loans in the past. All these points are included in the pre-investment study, so that, in many cases, it is regarded as an almost indispensable preliminary to securing an international loan of this nature.

Other international agencies, such as UNICEF and the World Food Program, also provide assistance, particularly for smaller projects. Additionally U.S.A.I.D., C.I.D.A., O.D.M., and several national governments (Sweden, France, Japan, Germany, and others) offer assistance which should be investigated. As international support for developing countries grows, new programs will undoubtedly be initiated.

CHAPTER EIGHT

SOLID WASTE

Those substances defined as solid wastes include "all non-gaseous, non-liquid wastes resulting from the wide range of community, industrial, commercial, and agricultural activities." (Gilbertson, 1969) Management of solid wastes is of concern throughout the world; increasing populations, industrialization, and consumerism contribute to the problem.

The need for sanitary methods of solid waste disposal in developing countries is evidenced by commonly occurring open garbage piles, often also containing nightsoil. This situation creates potential hazards in both rural and urban areas. The hazards tend to increase as the volumes of solid wastes increase; this occurs with increasing urbanization and industrilization.

Generally, domestic wastes are comprised of garbage from food preparation, wastes from house sweeping, animal wastes, and ashes from fires used for cooking or heating. In towns, this category is expanded to include wastes from more specialized or concentrated activities, such as schools, markets, hospitals, and tourist facilities.

Agricultural wastes include animal manures, crop residues and animal carcasses. Industrial wastes may include a variety of materials specific to particular industries. Many of these wastes are inert and not harmful to health, while others may include highly toxic substances. Generally, it should be the responsibility of the individual industry to properly dispose of toxic wastes. Other wastes most typically found in urban areas include those from construction, storm drains, street cleaning, abandoned vehicles, and nightsoil.

Garbage is defined as putrescible animal and vegetable wastes resulting from handling, preparation, and consumption of food. Rubbish is defined as nonputrescible solid wastes (including ashes) composed of both combustible and noncombustible wastes, such as paper, tin cans, wood, glass, crockery, etc. Refuse includes all putrescible and nonputrescible solid wastes (except body wastes) including garbage, rubbish, ashes, street cleanings, dead animals, abandoned automobiles, and solid market and industrial wastes.

It is well known that solid wastes, particularly those of animal or plant origin, attract insect and rodent pests and disease vectors. Flies, for example, often breed in solid waste. Their disease-transmitting potential has been discussed in the section on wastewater and excreta. Furthermore, organisms associated with fecal contamination are commonly detected in solid wastes, particularly where nightsoil is disposed with refuse, often where sanitary awareness and practice are inadequate. For example, a study by Bhoyar, et. al. (1973) indicates that both Ascaris lumbricoides and Trichuris trichiura are commonly present in city refuse and that their prevalence is highest in samples from slum and low income areas, and lowest or nonexistent in samples from high income areas.

Nonorganic solid wastes can indirectly contribute to the disease picture. For example, the Aedes mosquito is known to prefer nondegradable cans and

and similar objects for breeding (Almeida Machado, 1973). Therefore, increased disposal of these containers increases the reproductive potential of these disease vectors, transmitting yellow fever and dengue.

Industrial wastes create additional potential health hazards. Included in this group are radioactive wastes, explosives, and highly toxic and pathological materials, The increasing industrialization requires careful monitoring of new and old industries and their waste by-products.

Secondary health hazards can result from the disposal of solid wastes. For example, open or otherwise uncontrolled incineration of solid wastes results in air pollution. Additionally, improperly situated dumps or landfills may promote water pollution as leachate flows from dump to water source.

In rural areas, the organic content of refuse is relative higher than in urban areas, because it contains animal waste, cattle dung, or stable refuse. All of these contribute to the fertilizer quality, but must be properly treated. In rural households, particularly in scattered rural areas, the refuse dump is often in the backyard, near the location used for defecation. In such cases, domestic animals aid in the decomposition of organic materials, however, unless precautions are taken to sanitarily compost, particularly if human feces are included, the disease breeding potential of these dumps is tremendous. Composting is most commonly recommended under these conditions, with alternating layers of house refuse, garbage, and animal manure between thin layers of earth, straw, or ash. Composting is discussed in detail in a later section.

As population density increases, it may become profitable to dispose of solid wastes communally. Here individual storage mechanisms must be established with some means of collection and transport to the disposal site. This situation will be discussed in combination with urban technologies. In urban and semiurban areas, the three basic operations that are planned for are: storage collection, treatment, and disposal. Techniques in these three categories relevant to rural, semiurban, and urban areas are discussed below.

Storage of solid wastes at households is a simple procedure involving disposal of all refuse in a bin or can that is adequately covered to prevent pest invasion. In some situations household refuse is carried to communal storage bins. These must be made easy to operate, yet sufficiently secure when closed to prevent infestation. Openings should be within the reach of children for dumping.

The type of material from which the bin is made should be impermeable to leakage and easy to clean. Pickford (1977) discusses the advantages and disadvantages of metal versus concrete bins. Concrete is more difficult to clean while metal tends to retain a layer of refuse unless removed from the site and cleaned under careful supervision. Either one is more acceptable than open dumps. One successful type of communal container is made in Lagos (Pickford, 1977). It is a metal box with easily sliding panels. The container is removed by a special vehicle, emptied, and cleaned, while another clean container is put in its place.

Collection methods should avoid spillage around the refuse bin. Additionally, the collecting truck should have an adequate capacity, suitable cover, facilities for unloading with ease, maneuverability to negotiate narrow and winding roads, and proper heights for loading.

Vehicles chosen for collection should be relatively simple and smaller than those used in developed countries. Vehicles should require as little maintenance as possible, and should, when possible, be of a similar type, so that maintenance will be easier. Maintenance should include daily washing and periodic painting to prevent corrosion.

One method for optimal collection recommended by Pickford is a relay system whereby wastes in trailers may be hauled by tractors, thus requring fewer tractors. Double handling or transfer loading should generally be avoided due to the increased potential for health hazard. However, if distances to the disposal site are sufficiently great (over 20 kilometers), it may be more efficient to transfer the collected wastes into layer vehicles for final transport to the disposal site (Pickford, 1977).

Treatment and Disposal

Pickford (1977) recommends the following considerations be made in planning refuse treatment and disposal facilities:

- The quantity and character of the refuse, and likely changes in these.
- Amount and quality of land available for final deposit.
- Constraints on the temporary and ultimate use of possible tipping sites.
- The health of the public and refuse workers.
- The need to restrict the use of mechanical equipment in developing countries.
- The need for compost due to the soil structure and the type of agricultural activity.
- The potential use of power or heat resulting from incineration.
- The costs of possible methods.

The three basic methods of refuse treatment disposal practiced throughout the world and recommended for use are: composting, sanitary landfills (controlled tipping), and incineration. The comparative costs and benefits of the three methods are discussed by Gilbertson (1969). He suggests that the sanitary landfill is the least expensive if land is readily available and reasonably priced. The benefits of the sanitary landfill are: (1) it requires no secondary disposal once the site has been filled, (2) size and moisture content need not be regulated, and (3) the landfill site may be reclaimed for recreational use once it has been filled. In comparison, composting and incineration are more costly for community use, requiring size and moisture regulation of the waste materials. The primary benefit of composting is the production of a reusable compost which can be applied to soil as fertilizer. The primary benefit of incineration is that little land is required. Each of these three methods is discussed here in greater depth, stressing applicability to conditions in developing countries.

Composting has been used extensively in many parts of Asia as a means of converting refuse and nightsoil to reusable fertilizer. Decomposition of organic matter is controlled in a warm, moist environment by the action of various microorganisms. During this process, sufficient heat is generated to destroy most pathogens.

Generally, manual composting is recommended for developing countries. However, whether the benefits outweigh the costs is questionable. Some experts claim that the value of compost fertilizer is not worth the cost of treatment (Pickford, 1977). However, with the addition of nightsoil, the fertilizing potential of compost is much greater. Another argument against composting is the sale of compost does not cover the cost of plant operation and that in areas with already rich soil, there is no need for compost. These factors must be evaluated regionally.

Factors that must be considered in the operation of composting facilities include the following:

- Moisture content— this must be regulated to between 40 percent and 60 percent for optimal operation.
- Termperature— this should not exceed 70 degrees centigrade.

- Wind— wind tends to lower temperature and moisture content on the windward side of heaps. Water addition may be required to compensate for wind.
- Flies— flies may be controlled by turning the outside of windrows to the middle. This may be required as frequently as every day if flies are creating a nuisance.

(Pickford, 1977)

The method of composting used in developing countries generally involves the formation of windrows, long piles of refuse approximately two meters high. Typically, the refuse in turned by hand or tractor shovel every few days. This process may occur on open land or on a concrete floor which will control leaching of pollutants to the water table.

Pickford (1977) discussed two composting methods developed in India: the Bangalore method and the Indore process. Good compost is produced by the first method after six months and by the second method after four months. In larger cities with large volumes of compost produced, it may become necessary to incorporate a greater degree of mechanization including tractor shovels for turning, and a conveyor belt to remove stabilized compost.

The sanitary landfill method (or controlled tipping) is a method of disposing of solid wastes on land by compacting them to the smallest practical volume, and covering them with soil daily, such that health hazard and environmental contamination are eliminated. Most types and sizes of waste may be disposed in this manner. Pickford (1977) describes the benefits of this method:

- Limits odor emission.
- Prevents light refuse being blown away by the wind.
- Prevents the emergency of fly larvae.
- Prevents the breeding of flies.
- Allows rat control to be easily applied.
- Reduces the risk of fire.
- Makes the tip less attractive to birds.
- Provides good condtions for the biological degradation of organic matter in the tip.

Dumping, the principal operation of a sanitary landfill, can be accomplished with a shovel, or a small bulldozer, or a tractor loader-shovel. Exhibit 1 displays methods applicable to rural and urban areas. If very large objects are present, these should be crushed, however, in developing countries, scavenging is widespread and anything salvagable will probably already be removed. If refuse is composed of putrescible material, it should be covered as soon as possible. Otherwise, the refuse should be covered each day. A 60 cm layer of packed earth is recommended as final covering.

A critical consideration in construction and operation of a sanitary landfill is the prevention of leachate from the fill contaminating the groundwater. Pickford (1977) recommends three ways to prevent leaching:

1. Where the underlying strata are fissured, a layer of sand or gravel may be put at the bottom of the tip. This acts as a filter. Biological degradation of organic matter and natural reduction of bacteria occur.
2. An impermeable barrier may be put at the bottom of the tip. Clay or plastic sheeting covered by a protective layer of sand are suitable. The leachate should be collected and discharged to sewer or special treatment facilities. Alternatively, it can be pumped and sprayed on the surface of the tip to control dust.

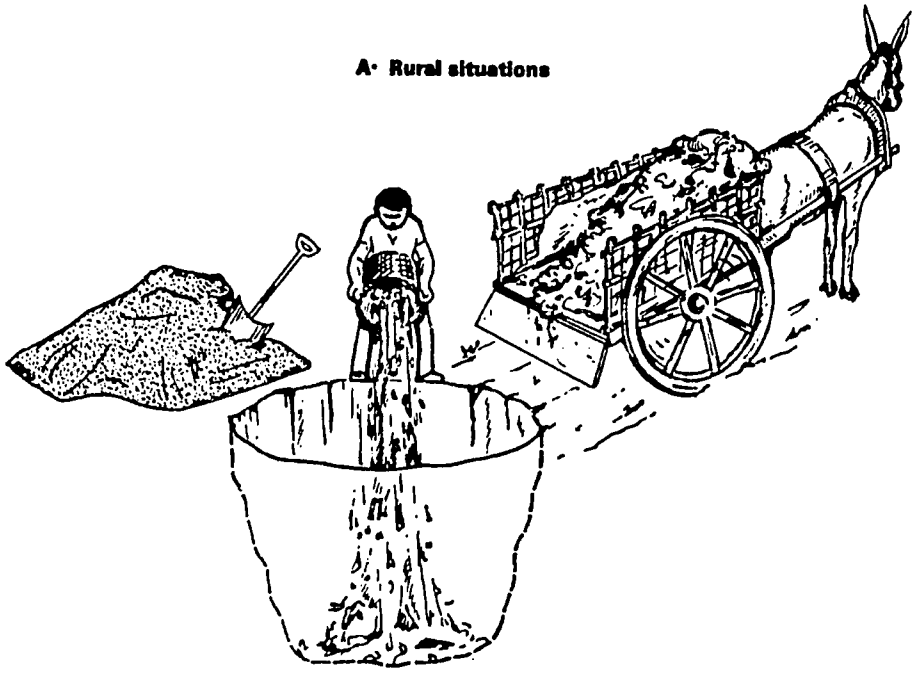

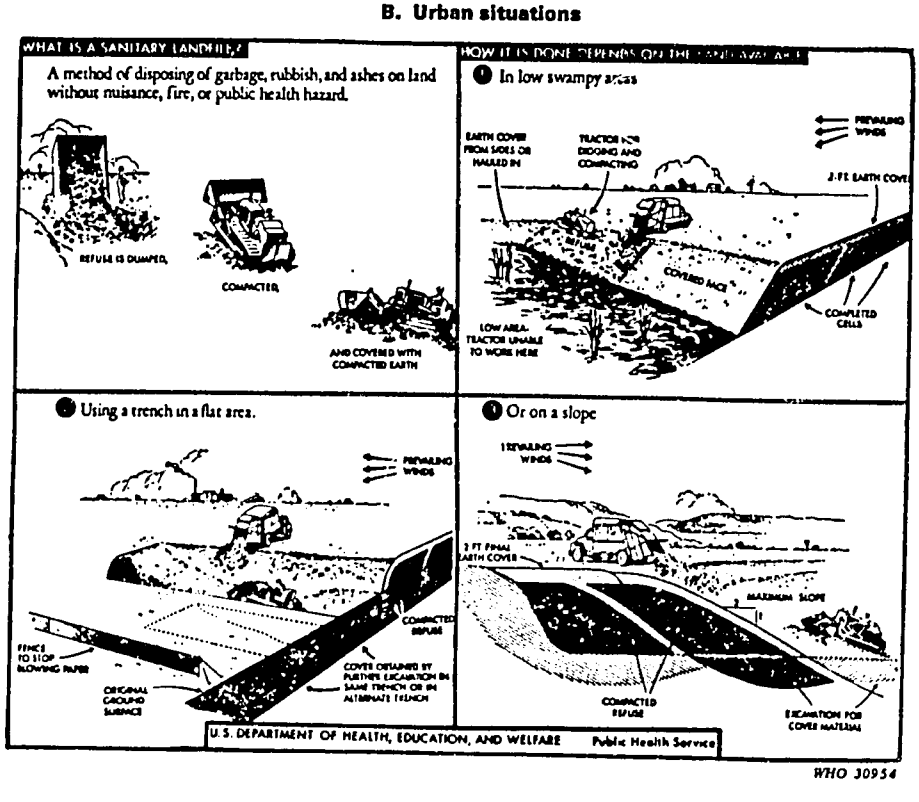

Exhibit 1: Sanitary Landfills (Source: Rajagopalan,1974)

3. The cover may be impervious to prevent rain reaching the tipped waste. Clay can be used. The surface must be given a slight fall and vegetation should be encouraged to reduce run-off and dessication. Drying cracks and settlement of tip material often destroy the impermeability of the cover. If the seal is maintained, gases given off during stabilization of refuse will be trapped. The cover may be lifted as a dome and then fractured.

Considerations for the choice of cover material are discussed by Pickford. First of all, any inert material may be used and advantage should be taken of local activities in the choice of cover.

On natural low-lying or desert sites, a shallow trench can be dug for the first section of the tip and material stockpiled. Cover is then obtained by excavating ahead of tipping until the whole site has been filled. The stockpile from the first trench is used to cover the last section of tip. Near large towns and cities, builders are often very willing to dispose of solid construction waste on refuse tips.

Inert industrial wastes may be available. If coal is used at local electricity power stations large quantities of ash may be available. At Sekondi and Kumasi in Ghana, sawdust from local mills provides an excellent cover. A smooth, even surface has been obtained. Stabilized material from old tips makes a satisfactory cover.

Nairobi has no difficulty in finding sites or cover. Generally, abandoned quarries are taken over. More than enough cover is delivered by contractors who are given a free tip for excavated material obtained during construction work. This is mainly black cotton soil and is stockpiled near the quarry. At large tips refuse is received throughout the 24 hours. Cover is moved from the stockpiles by day-shift workers using a tractor-shovel.

If the land to be filled is marshland, care should be taken to dump into shallow waters. Anaerobic decomposition and resultant odors are thereby minimized. The use of these types of lands should only be chosen when dry land alternatives are not available.

The planner must establish the optimal distance of the landfill from the community, balancing costs of transport and protection of public health. This determination must be based on local geographic factors as well as attitudes of community members. Pickford (1977) recommends the following management operations that may allow for siting close to built up areas: "Windblown refuse should be controlled by fences or by raising an embankment around the site. In windy weather refuse should be tipped at the end of the tip away from houses in bays formed in windless weather. The entrance should be attractive. Vehicles, and especially their wheels, should be cleaned before leaving the tip. Plant trees or shrubs, or raise embankments as a visual screen. Start tipping near to roads and work away so that the tip face cannot be seen by the public. Keep the completed tip tidy, putting it into temporary use as soon as possible. Plant grass, shrubs, or flowers. Inspect frequently for infestation by insects and vermin and take corrective action."

Incineration is a long-practiced method throughout the world. However, the process results in a great deal of smoke pollution unless properly controlled, and the technologies and expertise required to effect that control are very costly. Where land is available, incineration should not be performed. Only where land is scarce and money is readily available should this method be considered.

Other processes that may be considered for incorporation into the solid waste treatment and disposal process include spearation, pulverization, and compaction. Each of these provides certain benefits, however costs are also increased.

Separation or salvage, is often practiced by scavengers in developing countries. It may be beneficial to employ pickers to collect reusable materials thereby reducing the volumes to be treated and recycling nondegradable materials. The benefits to be gained from this process are highly variable and must be assessed on an individual local basis.

Pulverization homogenizes the wastes to be disposed before either composting, landfilling, or incineration. The increased cost of equipment must be weighed against advantages which include: reduced voids in landfill, easier control in tip, less fire risk, less attraction of insects and rodents, less cover required, biological decomposition is quicker, therefore reuse is accomplished faster. (Pickford, 1977)

High pressure compaction of refuse increases the density of collected materials. Transportation costs may be lower due to the decrease in volume. However, increased costs of compaction must be weighed against the decrease in transporation costs.

References

Committee on Solid Wastes, American Public Works Association. Refuse Collection Practice. Chicago: Public Administration Service, 1966.

Gotaas, H. B. Composting: Sanitary Disposal and Reclamation of Organic Wastes. (Monograph Series No. 31) Geneva: World Health Organization, 1956.

Pickford, J. "Solid waste in hot climates." Feachem, R., McGarry, M., and Mara, D. Water, Wastes, and Health in Hot Climates. London: John Wiley and Sons, Ltd., 1977.

Rajagopalan, S. Guide to Simple Sanitary Measures for the Control of Enteric Disease. Geneva: World Health Organization, 1974.

World Health Organization, Solid Wastes Disposal and control (Technical report series No. 484). Geneva, 1971.

CHAPTER NINE

PESTS AND PEST CONTROL

Pests of principal concern within the field of environmental health include those arthropods and rodents that in some manner transmit disease or nuisance to human beings. Secondary, however, are the economic pests, those that consume and destroy food and other commercial products. Accompanying a concern for the impact of pests on health should be a concern for the impact of pest control methods on human health, primarily the effects of pesticides.

The following section provides a discussion of the types of pests and their resultant hazards, classified as one of the following three types: vectors or reservoirs of disease; pests of humans and animals; agricultural and economic pests.

By far the most hazardous pests are the vectors of disease. Although by definition a vector is an arthropod that carries disease from one host to another susceptible host, the definition is commonly extended to also include rodents and snails. The arthropod vectors include flies, mosquitoes, lice, ticks, mites, fleas, and others specific to particular diseases. The diseases which they carry are of widespread significance internationally. For example, various mosquitoes transmit such diseases as yellow fever, malaria, filariasis, encephalitis, dengue, and dengue hemorrhagic fever. The black fly transmits onchocerciasis (river blindness), and the tsetse fly trypanosomiasis (African sleeping sickness). Fleas transmit bubonic and sylvatic plague and also murine typhus; mites transmit scrub typhus, lice transmit epidemic typhus; and sandflies transmit leishmaniasis. In many cases the hosts are wild or domesticated rodents that carry lice, fleas, mites, or ticks on their bodies and into close contact with human beings. Other reservoirs include a variety of domesticated and wild animals, primarily mammals or birds. The snail is also considered a vector, transmitting schistosomiasis, the widespread debilitating condition discussed previously in relation to water-associated diseases.

These vector-borne diseases are well known to be capable of reaching epidemic proportions and examples are well documented. For example, the pandemic of plague, called Black Death, transmitted by the rat flea in the middle ages killed one fourth of the population of Europe (WHO, 1972). Additionally, within the last 20 years outbreaks of epidemics are recorded for such diseases as yellow fever, dengue, and dengue hemorrhagic fever in the developing countries. Furthermore, epidemics associated with severe changes in the human environment, particularly warfare, have been reported in recent times (National Academy of Sciences, 1976).

The International picture with respect to vector-borne diseases is not all one-sided. Great strides have been made in the control of many of these diseases. Malaria, for example, was virtually eliminated from large portions of the world (consisting of an area inhabited by 745 million people) as of 1972

(National Academy of Science, 1976). Those areas were, however, typically where the disease was epidemiologically unstable, and were principally in the developed countries. The mechanics of control or eradication programs for communicable diseases are discussed fully in another document in this series entitled "Assessments of Communicable Disease Programs: Guidelines for Health Sector Analysis."

Incidences of certain vector-borne diseases appear to be increasing due to the activities of human beings. Extensive projects for the construction of dams have resulted in increases in a variety of diseases internationally, such as schistosomiasis malaria, and onchocerciasis. Furthermore, accumulation of waste materials provides breeding sites for Aedesaegypti, the mosquito transmitting either yellow fever or dengue. In essence, it appears that the public health problems produced by vectors persist and the vectors themselves are able to adapt to changes in the environments created by humans, only to create new problems.

Although transmission of the previously mentioned diseases is by far the most serious effect perpetrated by insect and rodent pests, their alternative impacts on humans and animals are noteworthy. These include varying degrees of annoyance and nuisance from bites, often painful, resulting in diminished ability to perform optimally. Mosquitoes and flies, particularly black flies, cause painful bites. Further annoyance is produced by arthropods such as head lice, crab lice, mites, and bedbugs.

Flies and cockroaches create annoyance and are also known to carry disease organisms, particularly those of enteric origin, on the surfaces of their bodies. Rats and mice, common cohabitors with human beings are known to carry filth on their bodies and to spread contamination. Additionally, they are known to produce painful bites, the severity of which often necessitates hospitalization.

The primary damage produced by pests to inanimate materials is the contamination and consumption of foodstuffs. Of course, this has a most serious impact on those countries where malnutrition and good shortages exist. Arthropods and rodents are the principal culprits. A World Health Organization estimate in 1972 purports that 33 million tons of bread grains and rice are consumed or otherwise rendered inedible by rodents annually and that similar, if not greater, damages are estimated for insects.

The total damages incurred by insect and rodent pests on foods, clothing and structures, etc. is incalculable. Suffice it to say that these are the most well-adapted creatures to human lifestyles and that alterations in their environment often provide new niches for them to occupy. Pest problems in developing countries are magnified since the majority of these countries are tropical or subtropical, thus already supporting large population of pests.

Assessment and Planning

Due to the extensive nature of potential pest problems, control operations must be well organized and thorough. Agencies should possess personnel with expertise in entomology and vector control. Training for field workers should be extensive in both surveillance and control operations. Due to the rapid adaptability of vectors to changes in their environment, it is strongly recommended that research be performed in conjunction with control programs.

The following section will discuss certain essential components of any vector control program, including the following: surveys, maps, climatological data, environmental improvement methods, chemical control methods, biological control methods, protection of human hosts, and surveillance and evaluation.

Any program of pest control must include surveys of pest populations, their habitats, and conditions that favor their breeding within a given area. Results of surveys are then used for: (1) planning a control program, (2) guiding control operations, and (3) evaluating effectiveness of the program.

Potential mosquito breeding areas may be identified by means of maps or photographs (if available) or by observation in a vehcile. However, for surveying an entire area there is no substitute for observation on foot. In this manner actual and potential breeding sites may be identified and sampled and signs of rodent activity may be observed. The World Health Organization (1972) recommends three stages of surveys when possible: the initial survey, the operations survey, and the evaluation survey.

The initial survey is made before control operations begin, the objective being to define the nature and extent of the problem. The species of vector, characteristics of the habitat, and the size of the population are some of the factors that must be known in detail. Since the size and species composition of vector populations fluctuate during the year as a result of seasonal changes, climatic conditions, and the availability of breeding areas, no single survey will completely define the problem. Thus, in the initial survey actual breeding sites and those places that have the characteristics of breeding sites should be recorded, even if no vectors are found in the latter. A series of follow-up inspections should be made periodically, keeping breeding habitats and vector populations under continual surveillance. After the initial survey has been made, and the problems defined, the program can be properly organized and control operations, both interim and permanent, started.

Daily operations and the plans made for each week, month, and year are guided by continual surveys. For effective control, information is required from rapid complete surveys of the area since some vectors, such as mosquitoes require a few days only in which to develop and become a problem. It is quite likely that routine inspections will not cover all possible vector-producing areas during the critical time and, for this reason, the pattern of routine surveys should be adjustable so that areas most likely to give rise to a vector problem are inspected every day or as frequently as possible. However, it is important that there be complete coverage of the area in the shortest possible time. Areas that present an immediate potential problem are determined by correlating knowledge of the area, the vector populations and their origin provides the program leader with the information needed to initiate control measures in order of priority.

The procedures and techniques of evaluation do not differ greatly, if at all, from operational surveys but the objectives are different. The personnal of operational and evaluation surveys should also be different so that persons do not evaluate their own work. Independent evaluation should result in control problems being corrected more quickly. Evaluation surveys indicate how well control procedures have been carried out, how effective they have been in eliminating vectors, and how much progress has been made. Ideally, the initial survey would report and define the problem, while the operation survey would report the progress of control measures, and the evaluation survey would report achievements and outstanding problems.

Reasonably accurate and comprehensive maps are essential in vector control work. Maps should be prepared before control operations are started, and mapping should continue as a routine while control measures are being applied. Every effort must be made to keep maps up to date, revisions being made to show all improvements or changed conditions. Maps are used for purposes of orientation and for locating vector habitats and sampling stations in and around the

installations. All information useful to vector control activities should be plotted, and should include the following: (1) streets, roads, access routes to vector habitats, buildings and other structures, and boundaries; and (2) natural drainage flow, ponds, lakes, streams, marshland, and other areas of water. In particular, a map should show the location and characteristics of actual and potential habitats of the various vectors. All such features, as well as the sampling stations, should be distinguished by symbols so that they are easily identified and readily located. All symbols should be clearly defined, simple to understand, and used repeatedly with the same meaning on all maps. If maps are not available at the outset, they should be produced during the initial survey.

Climatological factors have a considerable influence on vectors and thus on their control. In order to survive, disease vectors must adapt to a given range of climatic conditions and the success of a species or population depends on a complex of environmental conditions, any one of which alone or in combination may act as a limiting factor; the optimum combination will support the largest population. Although a better understanding of the influence of these factors is needed, it is, nevertheless, possible to use simple climatological data as indicators of vector population size.

The data that are most often available, or rather easily obtainable, are those for light, temperature, humidity, rainfall, and wind; continuous records of these factors should be maintained in the form of graphs or charts. Vectors such as mosquitoes will show direct correlations with some of the factors while other vectors, such as rodents and fleas, may show less correlation, or even none. For example, the rate at which mosquito or fly larvae develop is closely related to temperature, and as it is generally accepted that early larval stages are more easily killed than late ones, the optimum time at which to apply control measures will be indicated by the temperature. Measurements of relative humidity indicate the evaporation rate of water from temporary ponds or containers; when the relative humidity is high, mosquito breeding in such places is prolonged. Many adult mosquitoes are most active at dusk— the time of mating, searching for food, and general movement. This activity is influenced by light, temperature, humidity, and wind. When conditions are generally good for activity, some species of mosquito move slowly up-wind and fly down-wind slightly faster. Wind speed measurements may thus be used to predict invasions of mosquitoes from outside the control area, necessitating application of pesticide.

These examples show the potential value of climatological data in control activities; their actual value will depend on continuous recordings of climatic conditions being correlated with measurements of vector populations.

A major aspect of vector control is the elimination of sources of infestation through environmental improvement. This should be a primary focus of control operations, thereby reducing requirements for application of chemicals or other technical operations. Additionally, environmental improvement provides benefits to control programs in the other subsystems of environmental health.

The essentials for vector survival: food, shelter, and water, are the principal targets of control. Each site where such factors are present should be examined first to assess the possibility of their complete elimination and then with a view to applying modifications that would render the site inaccessible to vectors. For example, waste organic material should be stored in fly and rodent proof containers and buildings and storage facilities should be made rodent proof when possible. Areas of water may be drained or filled; cans, tires, and other objects holding water should be disposed of or stored under cover, and cisterns should be screened to exclude vectors.

Chemical control, or the use of various pesticides, is usually an integral part of a vector control program. Critical issues to consider in choosing an effective chemical include:

- Effectiveness against target organism;
- Degree of damage to nontarget organisms;
- Half-life of the pesticide or persistence in the environment;
- Damage to the environment;
- Toxicity to mammals and especially humans;
- Resistance developed by target organisms;
- Availability of other nonchemical control methods;
- Costs (for chemical, training, equipment, application);
- Ease of application;
- Possibility of other pests flourishing with the destruction of their natural enemies; and
- Potentially harmful residues on food crops.

The objective in pest control should be the use of a combination of biological, chemical, physical, and educational measures that will provide optimal results while minimizing hazards to human beings and wildlife. Consideration should be given to the potential spread of pesticides through the environment via the air, water, soil, and food as well as through the activities of human beings such as pesticide manufacture, transport, and handling.

In some cases biological control alternatives have been developed for the control of vectors. These are most typically accomplished through the introduction of natural predators or parasites into the population. For example, the fish Gambusia is often introduced into bodies of water as a mosquito larvicide. However, the introduction of larvivorous fish may result in adverse effects on native fish populations. Generally, biological control is employed in agricultural pest control. Further research in this area in agricultural and disease control is occurring; the potential benefits of biological control for the future are considerable.

A major measure in vector control is the protection of human hosts. This may be accomplished through a variety of methods, not all of which are effective for each disease problem. Common practices include health education, basic sanitation, personal hygiene, vaccination, antibiotic treatment, and other drug treatments.

Frequent evaluation of program effectiveness in vector control is essential. In itself, the quantity of pesticide used does not indicate the effectiveness of control, and neither does the extent of rodent proofing work, nor the amount of garbage removed unless follow-up surveys are made to determine the elimination or extent of population reduction, of the various species of vector. Evaluation must be based on continuous surveillance of vector populations, using as many techniques as are appropriate to measure the effectiveness of control. Specific methods of sampling of populations will be discussed in a later section of this chapter. Data from epidemiological surveillance of human populations should be included in the total vector control programs, thereby providing information on vector densities in an area, and the proportion of infected vectors in the population. Exhibit 1 provides a description of representative vector-borne diseases and the current methods for their control.

Control of Arthropod Vectors

In order to obtain the highest degree of vector control consistent with maximum safety and minimum costs, operators need a knowledge of both the biology of vector species and of the various control methods, techniques, and procedures. These will be discussed in the following section for mosquitoes, flies, and lice.

Exhibit 1

Representative Examples of Vector-Borne Diseases and Control Methods

Disease	Vector	Present Control Methods	Other Promising Approaches	Areas Involved
Chagas disease	Triatomid bugs (*Rhodinus* spp. *Triatoma* spp. *Panstrongylus* spp.)	Residual sprays (gamma-BHC, dieldrin)	Housing rehabilitation to eliminate breeding sites	South and Central America, Mexico
Dengue and dengue haemorrhagic fever	Mosquitoes (*Aedes* spp.)	Larvicides (Abate, malathion) habitat elimination, adulticides	Genetic techniques	Caribbean region S.E. Asia, Africa W. Pacific
Encephalitis (American)	Mosquitoes (*Culex* spp., *Aedes* spp. and others)	Urban sanitation (removal of breeding sites), larvicides, adulticides	Water management, larvivorous fish	North and South America
Filariasis (urban, bancroftian)	Mosquitoes (*Culex P. fatigans* and others	Urban sanitation, larvicides (fenthion, chlorinated hydrocarbons)	ULV fogging, permanent sanitation measures, drug treatments	Tropical Africa, Eastern Mediterranean, S. America, W. Pacific (Polynesia), Asia
Leishmaniasis	Sandflies (*Phlebotomus*)	Residual spraying (chlorinated hydrocarbons)		India, China Middle East, Africa, Latin America
Malaria	Mosquitoes (*Anopheles* ssp.)	Residual spraying (DDT), anti-larval measures	Alternative residual sprays, (propoxur, fenitrothion, source reduction)	

Exhibit 1 (continued)

Disease	Vector	Present Control Methods	Other Promising Approaches	Areas Involved
Onchocerciasis	Black fly (*Simulium* ssp.)	Larvicides (DDT, methoxchlor), fogging		West Africa, Latin America
Plague, bubonic	Fleas	Insecticide dusting (esp. DDT), rodenticides	Health education, sanitation	Foci in America, Asia, Africa
Schistosomiasis	Freshwater snails	Habitat management (esp. control of man-made water bodies), molluscicides	Competing snail species, fish predators	Africa, Brazil, Puerto Rico, Venezuela, Asia
Tick borne rickettsiosis	Ticks	Repellents, area dusting	Vaccine, antibiotics, body inspection and removal of ticks	Americas, Asia, Africa
Trypanosomiasis (Africa)	Tsetse fly (*Glossina* spp.)	Habitat management (selective clearance), adulticides (dieldrin, DDT)	Sterile males, suppresive drugs	Tropical Africa
Typhus, epidemic	Lice	Body dusting (DDT, gamma-BHC)	Health education, sanitation, Personal hygiene, vaccine, antibiotics	E. Europe, Mediterranean, N. and S. Africa, S. America
Yellow fever	Mosquitoes	Vaccination, larvicides (Abate, malathion), habitat elimination, adulticides	Genetic techniques	Tropical Americas, W. and Central Africa

Source: WHO Chronicle, Vol. 25, No. 5
May 1971

Mosquitos are the most important groups of insects with regard to public health. They are a remarkably adaptable and fully cosmopolitan group with over 3,000 species distributed throughout the world (WHO, 1972). Few, if any, areas where water is available for their larval development are free from these insects. Throughout history mosquitoes have been a constant impediment to progress, causing great suffering due to their blood-sucking habits and ability to support and transmit disease-causing organisms. They are well known as vectors of malaria, yellow fever, dengue, filariasis, and most of the arthropod-borne viral types of encephalitis.

The life cycle of the mosquito consists of four stages; egg, larva, pupa, and adult. The first three stages all live in water while adults are airborne. The particular habits, requirements, and environmental influences of each of these stages will vary from species to species and will greatly influence their distribution, productivity, and appropriate measures of control.

All stages in the life cycle of a mosquito are dependent upon a number of environmental factors for their survival and development. Many of these factors are still unknown, however, some generally known and measurable factors, such as wind, light, temperature, rainfall, and humidity, have a known relationship to the survival of mosquitoes that can be used as the basis of an index for use in surveillance and control. Some examples of these factors will be discussed in the following section.

The seasonal pattern of mosquito population changes is related to the supply of water and rainfall. Often, control programs aimed at preventing oviposition will focus on controlling water, as with drainage filling, water level management, and the screening of cisterns. However, fluctuations in water level or amount of water may encourage population growth of yet another species of mosquito.

Sampling techniques are useful in determining which species of mosquito are present in the area and, by the number of specimens collected, whether the control operation is successful. Generally, sampling is directed toward either the adult or the larva. Samples of adult mosquitoes may be taken while they are in the act of biting human volunteer "bait," from resting shelters, or in light traps. Larvae are often sampled by some form of device swept through the water. Oviposition traps are also used for capturing eggs.

Following sampling, all species of mosquito collected should be identified. The genera of concern are Aedes spp., Culex spp. and Anopheles spp. General factors and measures in the control of Aedes spp, vectors of yellow fever, dengue, and various types of viral encephalitis are as follows:

Aedes breeding places are extremely variable; in general, eggs are laid in temporary pools where the water level rises and falls, causing the oviposition area to be flooded at various intervals. Some species breed in coastal salt marshes that are flooded at intervals by unusually high tides while others have become adapted to agricultural irrigation practices. A few species, such as Ae. aegypit, breed in tree holes, rock pools, and artificial containers. Practically all species of Aedes feed on blood; many are vicious and extremely irritating biters of great economic importance while others are quite passive. The time of biting is also quite variable, but attacks are most frequently made during the evening hours. Some species, however, bite only during the day and others will bite at any time. Light traps, biting collections, or landing rate counts are effective sampling methods for many species of Aedes.

After breeding areas have been identified by larval surveys, control measures consist of (1) the elimination of breeding areas or their modification

by environmental improvement measures; the application of selected chemicals, primarily as larvicides, when an inspection shows that they are required; (3) the application of adulticides to complement larvicidal treatments when the emergency control of invading adult mosquitoes is indicated. For this group of mosquitoes, prehatching larvicidal treatment is useful.

Physiological resistance to DDT and dieldrin has been observed in the Caribbean area and South America, West Africa, and South-East Asia. In areas where resistance to DDT has been confirmed, one of the other insecticides mentioned above may be used.

Mosquito control organizations often depend on light traps, larval surveys, landing-rate counts, and public complaints to evaluate their operations. Ae. aegypti is not attracted to light traps and the public is often unaware of its presence. The traditional methods for evaluating eradication campaigns include elaborate procedures that are not only expensive but require numerous well-trained personnel. The recently developed oviposition traps for evaluation of Ae. aegypti control operations provide a more sensitive and efficient means of detecting the presence of this mosquito than do the traditional larval surveys.

Culex mosquitoes breed in quiet waters of almost all kinds from artificial containers and catchment basins of drainage systems to large bodies of permanent water. Water in which there is much organic material, including sewage, is often favored. The eggs are deposited on the surface of the water in rafts, each of which may contain 100 or more eggs. The rafts remain afloat until hatching occurs two to three days later. Breeding continues through the warm season and there are several generations a year. The adult females are inactive during the day and are often found resting in shelters. Biting usually occurs at night. The flight range varies from about one mile (2km) in some species up to 10 miles (16km) in others. Light traps, biting collections, and resting station collections are useful methods of sampling.

The genus contains efficient vectors of a number of arthropod-borne types of viral (arbovirus) encephalitis and filariasis. The control of both types of disease is based on the control of the vector but in filariasis the human hosts are also treated.

The chemical methods of control are the same as those for other mosquitoes, particular attention being given to the type of breeding habitat. Prehatching treatments cannot be used where fish or wildlife are involved but in many instances fish predators (Gambusia, for example) are very effective in water that is not highly polluted. Residual insecticides are used for the treatment of catchment basins or storm drains along roads.

Mosquitoes of the genus Anopheles are the exclusive vectors of human malaria. In addition to transmitting malaria, anophelines transmit filariasis and several virus diseases, although nonanopheline species are the more important vectors of these diseases. Malaria only is considered in this account of the genus Anopheles. Of the approximately 350 species of anophelines occurring throughout the world, more than 60 are known to be vectors of malaria (WHO, 1972).

The breeding habits of these vectors are highly variable. Although most species prefer clean fresh water, larvae of some species may be found in brackish water and some in polluted water. In short, standing or very slowly moving water of almost any kind is a potential breeding site for some species of Anopheles. Frequently, larvae are exposed to sunlight and often associated with emergent vegetation.

The adult anopheline mosquito moves about readily and may live for several weeks or more. Anophelines often overwinter in this stage. Adults normally

rest during the daylight hours and seek secluded natural resting places such as clumps of vegetation, hollow trees and logs, large exposed tree roots, and holes and crevices in rocks and soil; many species also enter man-made structures such as barns, animal shelters, houses, motor-cars, railway wagons, aircraft, and ships. Protected places with a high humidity and little movement of air are preferred.

Since many anophelines are poorly attracted to light, light-trap catches are often not a good indication of population size. Night biting collections, captures in traps baited with animals or human subjects, and collections of resting adults are the most satisfactory methods of collecting adult anophelines.

Resting places are frequently inside houses; female mosquitoes commonly enter a house after dark, take a blood meal, and then, being heavily engorged with blood, fly to a nearby wall or ceiling. The mosquitoes may rest on clothing hanging on a wall, on the back or underside of pieces of furniture or pictures, etc. The females frequently prefer the lower portions of the interiors of houses where temperatures are lower and the humidity is higher.

Anopehline mosquitoes are generally controlled in the larval and adult stages. Larval control is aimed at breeding sites and may be accomplished either by eliminating the favorable conditions in a habitat or by treating the water with an insecticide to destroy the larvae and pupae.

Not all anophelines are important in the transmission of disease and therefore water containing undetermined species of anopheline larvae is not necessarily the source of a vector species. When the larval breeding site has been identified, it is necessary to select the best control method. If the water can be eliminated by draining or filling, this should be done. However, the water may have an economic or aesthetic value, or elimination may be too expensive. In such circumstances, it may be possible to clear away the vegetation or to introduce fish, such as Gambusia, to feed on the larvae. In coastal areas that are subject to tidal action, control may possibly be effected by changing the salinity of the water. A brackish-water breeder such as An. sundaicus sometimes can be controlled by installing tidal gates that prevent sea water from entering the breeding sites. If the species prefers fresh water, sea water could be used to flood the area frequently, thereby making the site unsuitable for breeding.

The most commonly used materials for controlling larvae are mineral oil, Paris green, and the newer organic insecticides such as malathion, fenthion, and Abate. The application of oil to water is one of the oldest known mosquito control measures. Diesel or fuel oils are commonly used, but special oils also are prepared for control purposes. Paris green is used in a finely ground mixture with a diluent or carrier such as road dust, talc, or other material. Anti-larval measures are especially important in airport or harbor areas where anopheline breeding sites that cannot be permanently eliminated are within flight range of aircraft or ships. In most situations, the newer organophophorus or carbamate larvicides cost less than oils or Paris green. Abate has the lowest toxicity to mammals and its use offers the greatest safety factor.

Adult anopheline mosquitoes are most commonly controlled by spraying of houses with insecticide. DDT is still most widely used for this purpose. Malathion and propoxur, and to a lesser extent, dieldrin or gamma-HCH, are sometimes used as residual insecticides in place of DDT, especially in areas where DDT resistance is encountered. When possible, however, DDT is recommended since it is the least expensive and simplest to apply.

The susceptibility of mosquitoes to insecticides may change in the course of time and with prolonged exposure to various compounds, and there may also

be variations between larval and adult stages with respect to the same compound. Periodic tests should therefore be made to determine the susceptibility of larvae and adults of anopheline and other types of mosquito to the insecticides routinely used in control operations.

Flies, although generally less significant than mosquitoes in the spread of vector-borne diseases, do present widespread disease consequences. A few are vectors, such as the tsetse fly and the blackfly, while others are mechanical transmitters of disease organisms, such as the common housefly.

Those flies residing in close association with human beings are termed "domestic." Good sanitation is fundamental to the success of any control program. It is particularly important because resistance to insecticides has been found in many species of fly, and the housefly in particular is an outstanding example. Since 1948, when resistance to DDT was first observed in Musca domestica, the housefly had developed resistance to many other insecticides, including organophosphorus compounds and carbamates (WHO, 1972).

Chemical control of flies includes the use of pesticides as residual treatments, baits, impregnated cords, space sprays, and larvicides. While each measure is effective to a certain extent, it is frequently desirable to use two or more methods to achieve maximum control.

Generally, the most effective and inexpensive methods for control of domestic flies include sanitary excreta disposal, and collection and covering of refuse. However, in highly infested buildings, particularly food handling establishments, and where animals are in close proximity to the house, chemical methods may be required.

Lice have been recorded in association with human beings since early times. They are common under crowded conditions where personal hygiene is poor or during times of stress, such as wars or natural disasters, when facilities for personal cleanliness are not available. Lice are extremely irritating pests as well as the vectors of two human diseases that are known to reach epidemic proportions. These diseases are epidemic typhus and louse-borne relapsing fever. There are two species of louse that infest humans, one of which has two subspecies. The first species is the crab or pubic louse. The other species is the human louse, with the body louse and head louse as subspecies.

Once infestation occurs, control involves application of a pesticide in some form. For body lice treatment is directed against the clothing and bedding, often using powder or dust pesticides, or by soaking the garments. Head lice are generally treated with shampoos of DDT or lindane. Similar methods are applied for pubic lice. The prevention of louse infestation, particularly on a widespread basis, should result from improving practices of personal hygiene and living conditions.

Control of Rodents

Rodents have played a significant role in spreading disease throughout human populations since early times. The major diseases of concern are transmitted to humans via ectoparasites of rodents, primarily fleas or mites. Plague has been, and still is, a disease of major concern due to its potential for reaching epidemic proportions. The rodent flea is the principal transmitter of murine typhus and tsugamushi disease (mite typhus) is transmitted by mite larvae found on rodents.

Many rodent-borne diseases, on the other hand, do not involve external parasites as vectors. For example, rodent feces may cause food poisoning (food infection) with various bacteria found in the gut (e.g. Salmonella typhimurium and S. enteritidis). Rat urine may contain spirochaetes causing leptospiral

jaundice. The disease may be contracted through contaminated drinking water. Rat bites may also lead to disease, commonly referred to as "rat-bite fever." Additional diseases associated with rodents include tularemia, Q-fever, rickettsial pox, lymphocytic choriomeningitis, Rocky Mountain Spotted Fever, various hemorrhagic fevers, and trichinosis.

Rodents also play a major role in the destruction of food crops throughout the production process. Clearly, this becomes most critical where food is in short supply. Nevertheless, the focus of this document will be on the control, primarily, of domestic rodents.

Although there are numerous rodent species, many of which have been known to carry diseases of human beings, there are three major species that are worldwide pests. These are the roof rat (Rattus rattus), the Norway rat (Rattus norvegicus), and the house mouse (mus musculus).

The distribution of these species in a community is highly variable. Essentially, they will nest anywhere. There is sufficient material for cover, whether inside or outside human habitations. The foods they eat are equally variable, from stored foodstuffs to field crops. Their diversity of habits and extreme adaptability are key factors in the success of these species of rodents.

As with any vector control program, surveys are critical. The factors to be determined include the following: whether rodents are present, which species are present, where the rodents are living and moving, how they should be killed, and what should be done to prevent the recurrence of infestation. Additionally, the identification of potential breeding sites for future surveys is critical.

There are numerous signs of rodent infestation that are easily observable. These include tracks or smears from the daily "runs" to food and drinking sites, droppings associated with food particles, toothmarks on certain objects, and characteristic odors and noises. The signs of infestation are highly variable and the experienced surveyor may often set traps in areas suspected of infestation. Additionally, judgments may be made by inference, rather than direct signs.

In almost any area, there are generally various features that could be modified or eliminated to make the area much less able to support rats and mice. Such environmental improvements are often very simple to carry out and the benefits to a community may extend well beyond those directly associated with rodent control.

The most important factor affecting rodent numbers is the availability of food. All food, whether for human or animal consumption, and whether kept in dwellings, restaurants, warehouses, or any other place, should be stored in rodent proof containers, such as glass and earthenware jars or metal cans and bins; even solid wooden boxes provide good protection for a time. An enormous amount of food, such as wheat, rice, groundnuts, etc. is still transported and stored in sacks made of hessian, paper, or plastic. These packing materials are easily penetrated by rodents and when such damage occurs the cost of repacking the contents may be considerable. Stacks of sacks containing various food materials provide not only food and harborage for rodents, but also nesting material as well. It is, therefore, important that such stacks should be kept relatively narrow, not more than a few meters wide, and that sufficient space should be left for a man to walk between the stack and the wall. These measures permit stores to be adequately inspected for rodent traces and make treatments easier to carry out effectively. A further precaution that will prevent extensive breeding of rodents among sacks of food is that a stack should not be allowed to remain in the same place for longer than about two months.

Food wastes must also be withheld from rodents, and all materials containing edible waste, such as floor sweepings from food stores and kitchen refuse from dwellings and restaurants, should be stored in suitable rodent-proof containers to await collection and subsequent disposal.

Of equal importance with food in the rodent's environment is the availability of nesting sites. Almost any pile of debris, whether indoors or out, is a potential breeding site. These should be removed to a dump and steps should be taken to prevent further accumulation. Good sanitation, particularly refuse collection and disposal, are key factors in community rodent control.

Rodent proofing is really part of the process of environmental improvement considered in the previous section, but it is important enough to merit separate consideration. Proofing is concerned chiefly with the complete exclusion of rodents from certain parts of the environment rather than with making an area less acceptable to them. In rodent proofing a building for example, the aim is to prevent rodents gaining access to the inside of the building, moving from one room to another, and entering cavities in the fabric in which they could nest. Such proofing is often simply a matter of finding all openings more than six millimeters wide (the smallest hole that a young mouse can enter) and stopping them with suitable rodent-proof material. Particular attention should be paid to spaces under doors and where pipes pass through walls, windows, and other openings that must be kept open for purposes of ventilation, and gaps between the tops of walls and eaves. Where sewers exist, care should be taken to seal all potential entry points from rodents. This may involve rodent proof covers over all access points.

Proofing can also prevent the occupation by rats of two commonly used outdoor nesting sites— namely, trees and harbor walls. Roof rats can be prevented from nesting in many types of trees by placing a metal collar around the trunk and Norway rats will be unable to live in harbor walls if cracks and holes above low-water mark are sealed with concrete.

Clearly, optimal rodent proofing is achieved when it is developed in the original design of a structure. Rodent-proof materials should be used. Probably the best guide to choosing such materials is direct experience with respect to which materials the local rodent populations have not been able to penetrate.

Chemicals used to control rodent populations are generally either acute "one-dose" poisons or anticoagulants, which are called "multiple-dose poisons." All are usually administered in food used as bait.

The acute poisons may produce a variety of physiological effects leading to death. The process of poisoning is rapid and rodents generally exhibit poisoning effects within a half hour. However, because of this rapid effect, those animals ingesting sublethal dosages may refuse to eat more of the bait for long periods of time, thereby rendering the control ineffective. Additionally, the use of acute poisons may prove harmful to other non-target animals.

In contrast to the acute poisons, anticoagulants all produce the same physiological effect: prevention of the clotting of blood. The anticoagulants are cumulative in effect and are applied at low concentrations requiring several feedings to produce lethal effects. The slowness of effect ensures that a lethal dose will be ingested before the animal becomes too ill to feed. Additionally, if other animals are found to be ingesting the bait, there is time to administer an antidote or prevent continued ingestion before the animal will die.

Generally, the anticoagulant is the chemical of choice over the acute poison (WHO, 1972). However, some rodents may develop resistance to anticoagulants or immediate extermination may warrant the use of acute poisons. Ultimately, however, anticoagulants are more effective (WHO, 1972).

Other methods of controlling rodents include the use of traps and poison gases. Traps are rarely effective in controlling medium to large infestations but may be useful in combination with chemical control. Generally, the use of poison gases is more expensive than other chemical methods and may pose greater hazard when applied around human habitations.

Pesticides

Before choosing a pesticide for use in a pest control program, the planner must be aware of the potential hazards involved and weigh them against the potential benefits. Often tradeoffs must be made. The use of DDT in malaria eradication programs is presented here as an example. Clearly, the health consequences of malaria are widespread and severe. Furthermore, DDT is as yet the most effective means of control available. And in the course of massive eradication or control programs DDT has been distributed extensively throughout the environment. The effects of DDT itself on health, however, are not well established. The literature suggests that many pesticides, including DDT, may exhibit carcinogenic and tumorgenic properties in laboratory animals (Hayes, 1975). Findings are inconclusive and often conflicting. Nevertheless, the potential harm that may be incurred by future generations as a direct result of indiscriminate use of pesticides is worthy of consideration. Furthermore, in addition to the human health effects, damage caused by DDT to the environment in general and specifically to other organisms is well known.

The following sections will discuss the effects of pesticides on human health and on the environment. Clearly, these effects will vary considerably from one compound to another. The focus, here, therefore, will be on generalized effects. The reader should refer to the most current literature for specific data on any one pesticide.

Exposures to pesticides may be either chronic or acute, however, very little documentation exists for the effects of chronic exposure on human beings. Acute exposures have been commonly reported in agricultural and disease control field personnel primarily from mishandling of pesticides. Additional acute exposures have been reported in workers involved in pesticide manufacture. The principal nonoccupational exposure occurs through ingestion of foods containing pesticides.

The potential effects of pesticides on the body include storage, morbidity, and mortality. Chlorinated hydrocarbons have been found stored in animal tissues, including human tissue, however, correlations between stored concentrations and resultant clinical manifestations are inconclusive. Nevertheless, the literature indicates a variety of conditions, primarily established in laboratory animals associated with pesticide exposures. These include: central and peripheral nervous system effects, liver and kidney damage, and fibrosis of the lung. Additionally, as previously mentioned, some researchers report tumorogenicity and carcinogenicity in laboratory animals.

The application of pesticides in the environment has, throughout the history of pesticide use, produced many adverse effects. Larvicides, applied to water for control of mosquitoes, sandflies, and blackflies have been a major source of damage. Many early larvicides, particularly chlorinated hydrocarbons, caused widespread harm to aquatic organisms. DDT, for example, was found to damage salt marsh crustaceans and additionally to bioaccumulate in the food web of the salt marsh ecosystem (National Research Council, 1976). In lakes and streams DDT was found to interfere with fish reproduction.

Widespread use of chlorinated hydrocarbons led to the development of resistance in many target organisms. Pest control programs then began using organophosphates. Some of these compounds, such as parathion and malathion, have been reported to damage aquatic nontarget organisms. Although more recently developed compounds such as Abate and Dursban have relative little environmental impact (National Research Council). Generally, the dosages applied in adulticiding for mosquitoes, blackflies, and sandflies are much lower than for larviciding. Very little information is available on environmental hazards associated with this process.

The United States Agency for International Development Pest Management Program has provided an extensive document on those pesticides recommended for use (U.S.A.I.D., 1977). Data provided include nomenclature, manufacture, formulations, United States use patterns, human health effects, and environmental effects. This information may be useful in planning a pest control program. However, knowledge is as yet lacking in the area of general behavior and effects of pesticides in tropical environments. Factors to consider regarding environmental effects of pesticides in tropical ecosystems include the following:

- The rate of degradation or disappearance (e.g., by volatilization) of all pesticides will be faster as a consequence of higher temperatures, higher relative humidity, and higher intensity of UV-radiation (sunlight).
- Seasonal cycles are generally less important in tropical environments. The structure of the natural communities, therefore, does not undergo marked seasonal changes, as it does in temperate climates.
- Species diversity and equitability (even distribution of individuals among the species) and food web complexity are generally higher in tropical ecosystems. The high degree of ecological compatibility among the species is facilitated, for instance, by specialized trophic relationships between predators and their prey.

Although these A.I.D. recommendations are based on data from, primarily, the developed countries, they may be useful to planners in developing countries. The names of the compounds are presented with pesticide type and chemical class.

Common Name	Pesticide Type	Chemical Class
Abate	Mosquito larvicide, insecticide	Organophosphate
Alachlor	Selective herbicide	Acetanilide
Atrazine	Selective herbicide	Triazine
BHC	Insecticide	Chlorinated Hydrocarbon
Carbaryl	Broad spectrum insecticide	Carbamate
Cyanazine	Selective herbicide	Nitril derivative of triazine

Common Name	Pesticide Type	Chemical Class
DDT	Insecticide	Chlorinated hydrocarbon
Endasulfan	Insecticide and acaricide	Chlorinated diene
Fenitrothion	Contact insecticide and selective acaricide	Organophosphate
Linuron	Herbicide	Urea
Malathion	Nonsystemic insecticide and acaricide	Organophosphate
Monocrotophos	Systemic insecticide, acaricide	Organophosphate
Oxydemeton-methyl	Systemic insecticide acaricide	Organophosphate
Parathion	Insecticide	Organophosphate
Propoxur	Insecticide	Carbamate
Trichlorfon	Insecticide	Phosphonate

Many of these compounds are also used extensively in agricultural pest control. Often the resistance to a particular pesticide developed by a disease vector is promoted by the widespread distribution of that substance in agriculture. This fact underscores the need for cooperation between all agencies involved in health and environmental protection. The controversial nature of the pesticide question and the grave importance of the conditions they control emphasize the need for programs to monitor pesticide levels in the environment and, additionally, to educate the appropriate personnel in the proper handling of pesticides.

The decision to use a particular pesticide should be based upon the following factors:

- restrictions on use;
- if this is the correct chemical for the problem;
- if the product can be used safely under existing conditions;
- what environmental precautions are needed;
- if the formulation and amount of active ingredient are appropriate for the job;
- if the proper application equipment is available;
- if the proper protective clothing and equipment are available;
- how much pesticide is needed.

Points in the process of handling pesticides in which there are some risks of injury include hauling, storage, mixing, calibrating equipment before use, loading, applying, and repairing equipment. Also, risk is involved when working in pesticide treated fields and buildings, cleaning application equipment after use, disposing of surplus pesticide and empty containers, cleaning up spills, and cleaning protective clothing and equipment. Monitoring should occur at all these points for safe handling.

Due to the widespread use of pesticides in agriculture as well as public health, coordination between respective responsible agencies should be established. Education of the public, particularly in agricultural communities should be a major concern.

It is recommended that laws and regulations be established for pesticide handling. These regulations should control the types of pesticides to be used, who can use them (by certification), and what measures should be taken to protect the health of the public. Regulations should establish safety criteria for equipment, reentry times, and the disposal of unused chemicals and containers.

References

Hayes Jr., W. J. Toxicology of Pesticides. Baltimore: The Williams and Wilkins Col, 1975.

National Research Council, National Academy of Sciences. Pest Control and Public Health, Vol. 5 (series: Pest Control: An Assessment of Present and Alternative Technologies.) Washington, D.C., 1971.

U. S. Agency for International Development, Department of State. Environmental Impact Statement on the AID Pest Management Program. (Volumes 1 and 2) Washington, D.C.: Government Printing Office, 1977.

World Health Organization. Health Hazards of the Human Environment. Geneva, 1972.

World Health Organization. Vector Control in International Health. Geneva, 1972.

☆U.S. GOVERNMENT PRINTING OFFICE: 1979-300-477/6464

Volumes in International Health Planning Methods - Guidelines for Analysis

1. Communicable Disease Control Planning
2. Environmental Health Planning
3. Health Manpower Planning
4. Socio-cultural Factors in Health Planning
5. Health Facilities Planning
6. Indigenous and Private Health Care Planning
7. Pharmaceutical Supply System Planning
8. Health Sector Financing in Developing Countries
9. Community Health Planning
10. Health or Wealth

Volumes in International Health Planning Reference Series - Selected Bibliographies and State-of-the-Art Reviews

1. Communicable Disease and Health Planning References
2. Environmental Health References
3. Health Manpower Planning References
4. Socio-cultural Facotrs in Health References
5. Pharmaceutical Supply System Bibliographies
6. Health Facilities Planning References

U.S. DEPARTMENT OF HEALTH, EDUCATION, AND WELFARE
Public Health Service
Office of the Assistant Secretary for Health