634.97
L 396

PA/TA(AG)-03-75

United States
Department of
Agriculture

Forest
Service

Forest
Products
Laboratory

Utilization of Mixed Hardwoods from Tropical Forests for Pulp, Paper, and Panel Products

Final Report to
Office of Science and Technology
Development Support Bureau
Agency for International Development
U.S. Department of State

Participating Agency Service Agreement
(PASA) AG/TAB-995-3-75

April 1979

Acknowledgement

Valuable assistance was provided by members of many organizations. Their help is gratefully acknowledged. Particular assistance was given by members of the following organizations:

The Office of Science and Technology, Development Support Bureau, Agency for International Development (A.I.D.), U.S. Department of State; the A.I.D. Missions in the Philippines, Ghana, Colombia, Kenya and Ethiopia; the Forest Products Laboratory, Forest Service, U.S. Department of Agriculture; the College of Forestry, University of Minnesota; the Botany Department, University of Florida; the Department of Environmental Studies, Yale University; the Philippine Forest Products Research and Industries Development Commission; the Ghanaian Forest Products Research Institute; and the Colombian Developmental Institute of Natural Renewable Resources.

UTILIZATION OF MIXED HARDWOODS

FROM TROPICAL FORESTS

FOR PULP, PAPER, AND PANEL PRODUCTS

Compiled by:

JAMES F. LAUNDRIE

Chemical Engineer,
Forest Products Laboratory
Forest Service,
U.S. Department of Agriculture

Final Report to
Office of Science and Technology
Development Support Bureau
Agency for International Development
U.S. Department of State

CONTENTS

	Page
Summary	1
Conclusions	4
Recommendations	7
Introduction	9
Background	9
Objectives	10
Scope of Project	11
Personnel Involved	13
Results of Mixed Tropical Hardwoods Research	16
Wood Procurement and Analysis	16
Technical Feasibility of Products	19
Processing Problems	24
Outside Chip Storage	27
Preliminary Industrial Survey	30
Environmental Considerations	35
Impact on Soils and Nutrients	35
Impact on Water	36
Impact on Genetic Information	37
Impact on Animals	37
Silvicultural Considerations	38
Heavy Removal Cutting with Natural Regeneration	38
Partial Cutting	39
Clearcutting and Planting	39
Integration with Agriculture	39
General	40
International Conference	41
Tables of Data	42
References	62

SUMMARY

The purpose of this project is to promote utilization of unutilized, mixed tropical hardwoods and create useful products as well as employment in developing countries. The specific objectives are:

(1) To conduct research, develop, and test a commercially feasible processing system for using naturally occurring tropical hardwoods as a source for production of pulp, paper, and panel boards, with residuals providing the energy requirements for the processing system, and

(2) To design a preinvestment package from various studies based on the technical process developed under (1), apply it in three or more less developed countries in Asia, Africa, and Latin America, and publicize, demonstrate, and disseminate the package to potential investors (selected LDC government, banks, donor agencies, private enterprise) to prove the commercial value of constructing and operating processing plants, and stimulate actual and future investments.

Objective (1) was attained through a comprehensive study to determine the technical feasibility of using broad spectrum mixtures of tropical hardwoods for production of pulp, paper, hardboard, and particleboard. This study was undertaken by the Office of Science and Technology, Development Support Bureau, Agency for International Development, Department of State, through the Forest Products Laboratory, Forest Service, Department of Agriculture. The investigators also reviewed previous research on silvicultural and environmental implications of such utilization.

Based on the premises that wood density is critical in determining quality of products and that information developed could be applied to many tropical forest areas, mixed hardwood samples were collected in the Philippines, Ghana, and Colombia. From these samples, kraft pulps of quality equal to present commercial pulps were produced. Newsprint of commercial quality, strength, and printability was made from 100 percent tropical hardwood pulps. Cultural, tissue, and toweling papers were made from high percentages of such pulps. For packaging applications, kraft pulps suitable for mixing with long-fibered pulp for linerboard were made, as well as semichemical pulps for corrugating medium; an additional option was a single-process kraft pulp for both purposes.

Wet- and dry-formed hardboards, as well as competitive-quality particleboards, were made successfully.

Under conditions similar to those found at the Bislig, Surigao del Sur, Philippines site of an experimental chip pile, mixed tropical hardwoods can be stored for up to 9 months with no serious loss in pulp strength properties. Storage of mixed tropical hardwood chips, even for as little

as 3 months, results in a reduction of pitch troubles in pulp and paper manufacture. A more complete summary of the research results begins on page 16.

Opportunity for economic utilization of any species would expand options for silvicultural management in forests in which highly selective and incomplete utilization has been the rule. The applicability of various kinds of partial cutting or agrosilvicultural methods would be increased as much as that of clearcutting and planting. With forests utilized as they are, there is less need to direct species composition to fit species-oriented utilization.

Environmental effects are linked to both silvicultural and utilization procedures. Erosion and stream sediment loads increase with logging, but these can be controlled with proper engineering. Nutrient loss may be minimized by leaving branches, leaves, and bark in the woods. Gene pool erosion can take place either through selective harvesting or removal of entire species. Loss of habitat may be a serious threat to tropical wildlife, probably requiring that areas of natural forest be preserved to avoid serious problems in this aspect. A more complete summary of the environmental implications begins on page 35.

Objective (2) was partially attained through a preinvestment package in the form of a Preliminary Industrial Survey, or base-case study, which showed that the economics of constructing a new kraft pulpmill are adversely affected by currently depressed market prices. This condition can be expected to change as demand catches up to supply. Incremental earnings benefits can be obtained under specific conditions in an existing kraft pulpmill by using mixed tropical hardwoods for pulping and as a fuel substitute for the generation of steam and electrical energy. A more complete summary of the Preliminary Industrial Survey begins on page 30.

Objective (2) was also partially attained through an International Conference on Improved Utilization of Tropical Forests, held May 21 to 26, 1978, in Madison, Wis. The purpose of this conference was to familiarize those attending with the most up-to-date information about utilization of tropical forests, with heavy emphasis placed on the results of this project. The Conference had an attendance of 138, including 67 from 23 other countries. The Proceedings of the Conference were published by the U.S. Forest Products Laboratory in 1978 and sent to all of the attendees. The Proceedings include the opening, welcoming, keynote, and dinner addresses, all of the technical papers presented, and summations of the technical sessions.

The complete Preliminary Industrial Survey and the Proceedings of the International Conference can be obtained by writing to the Agency for International Development, U.S. Department of State, R & D Report Distribution Center, P.O. Box 7366, Riverdale Station, Hampton, Virginia, 23666, U.S.A.

CONCLUSIONS

1. The woods of tropical hardwood trees have wide ranges of color and specific gravity. Some of these woods contain large amounts of ash, silica, and extractives.

2. The barks of tropical hardwood trees often contain excessive amounts of ash and silica which preclude consideration of whole-tree utilization concepts for the production of fiber products.

3. The barks of tropical hardwood trees are suitable for burning to provide energy for processing.

4. Bleached market grades of kraft pulps, which are as good or better in strength than commercial hardwood market pulps, can be made from mixed tropical hardwoods.

5. Kraft pulps from mixtures of species from the Philippines, Ghana, or Colombia were all nearly the same in quality. This suggests that mixed tropical hardwoods, regardless of source, are a good raw material for such pulp.

6. Good-quality thermomechanical pulps can be made from mixtures of the lowest density and lightest colored tropical hardwoods. The range of species can be extended to include higher density, darker colored woods, providing high brightness is not required.

7. Acceptable-quality newsprint can be made from 100 percent tropical hardwood pulps for local markets but may require the addition of a small quantity of long-fibered pulp for the world market.

8. Acceptable-quality sanitary tissue and toweling can be made using 80 to 90 percent tropical hardwood pulps. Thermomechanical pulps can be used in place of part of the kraft pulp with no significant changes in quality.

9. Acceptable-quality tablet papers can be made with as much as 80 percent tropical hardwood pulp. Part of the tropical hardwood pulp can be made by the thermomechanical pulping process, but this pulp will require bleaching even when using the lightest colored species.

10. Corrugating mediums with good quality can be made from mixed tropical hardwood semichemical pulps using the neutral sulfite, kraft, green liquor, or soda-carbonate pulping processes; a problem exists in running these mediums through the corrugator but this can be overcome by the addition of a lubricant.

11. Good-quality corrugating medium can also be made from high-yield kraft screenings that can be successfully run through the corrugator without a lubricant. This corrugating medium, combined with linerboard made from a mixture of one-half screened tropical hardwood high-yield kraft pulp and half western softwood unbleached kraft pulp, produces good-quality corrugated fiberboard containers.

12. With less energy than required for most U.S. species, tropical hardwood mixtures can be converted into pressurized refined pulps suitable for the manufacture of hardboards.

13. Good-quality, high-density hardboards can be made from tropical hardwood mixtures by either the dry- or wet-forming process.

14. Good-quality, medium-density hardboards and particleboards for interior or exterior use can be manufactured from tropical hardwood mixtures.

15. Outside storage of mixed tropical hardwood chips, for as little as 3 months, will reduce pitch troubles during the manufacture of pulp and paper.

16. There is no danger of spontaneous combustion in mixed tropical hardwood chip piles in the area of Bislig, Surigao del Sur, Philippines or any similar area with well distributed and relatively high rainfall. This is due to the increasingly higher moisture content of the chips and relatively low temperatures obtained during the storage period.

17. Under conditions similar to those at the experimental site, mixed tropical hardwood chips can be stored up to 9 months with no serious loss in pulp strength properties.

18. Intensified utilization of mixed tropical hardwoods for pulp, paper, and panel products allows the use of forests as they exist and broadens the opportunities to apply various silvicultural techniques. These techniques include heavy removal with natural regeneration, partial cutting, clearcutting with the establishment of plantations, and integration with agriculture.

19. Intensified utilization of mixed tropical hardwoods also increases the environmental concerns which are directly related to the silvicultural techniques employed. Each of these silvicultural techniques will have different environmental impacts on soils, nutrients, water, genetic information, and biological life.

20. The economics of constructing a new 500 ton per day kraft pulpmill utilizing mixed tropical hardwoods are adversely affected by currently depressed market prices. This condition is expected to improve as

demand catches up with supply. Viability can also be improved through government incentives, local or regional needs, the economy, and employment needs of the developing country, and by increasing the pulpmill size.

21. Conversion of an existing kraft pulpmill (designed for temperate zone hardwoods) to use mixed tropical hardwoods, and the substitution of wood for oil as fuel in a steam-generating boiler, requires no new technology. Financial justification will vary for each specific mill and location.

RECOMMENDATIONS

1. A.I.D. should distribute this report and the Preliminary Industrial Survey widely to inform potential investors and the developing countries in the tropics of the technical feasibility of producing market pulps, a wide variety of papers, corrugated fiberboard containers, and construction panel products from mixtures of tropical hardwoods. A.I.D. should emphasize that the production of these products in the developing countries will: (1) provide jobs in both the forests and at the plant sites, (2) stimulate new ancillary industries at both the plant sites and in other areas, and (3) save foreign exchange through import substitution.

2. A.I.D. should emphasize to potential investors and the developing countries the need for applying the results of the Preliminary Industrial Survey to specific sites within the developing countries. A.I.D. should also emphasize that the economic viability of any manufacturing plant is highly dependent on many site-specific factors including local markets, government incentives, labor costs, and infrastructure needs. Therefore, a complete economic analysis for a specific site is required prior to investment in a manufacturing plant.

3. A.I.D., in collaboration with both multilateral and other bilateral assistance agencies, should develop common environmentally sound guidelines for providing assistance to developing countries for achieving long-term benefits from tropical forest lands.

4. A.I.D., with the assistance of the U.S. Forest Service, should coordinate and finance cooperative forestry research on an international basis in the following areas:

(a) The need for natural tropical forest reserves.

(b) Impacts of existing tropical forest uses and their significance to future environmental values.

(c) Studies of suitability of typical mixtures of woods from primary and secondary forests for production of all types of forest products.

(d) Site productivity potentials.

(e) The effectiveness of plantations and silvicultural practices in natural forests.

(f) The potentials of agroforestry.

(g) Technology for harvesting that has social and economic balance.

(h) Forest product manufacturing technology suitable to meet the domestic needs of the developing countries.

INTRODUCTION

Background

The problems of utilizing tropical forests in an economically efficient and ecologically sound manner seem monumental--great variety of species, unique properties of woods, environmental concerns, and the enigmas of transportation and products. Despite the abundance of tropical woods, only a relatively few currently find a ready market. Teak and mahogany are examples of hardwoods whose qualities are recognized. But the vast majority of tropical hardwoods enjoy little interest from the forest products industries.

Exploitation of these forests has usually been wasteful and environmentally degrading. Typically, the forests have been highgraded by removing a few choice species, leaving hundreds of secondary species.

These secondary species represent a vast underutilized--and renewable--resource in many developing countries, expecially the forests of West Africa, Southeast Asia, and Latin America. If these species can be used economically, developing countries can take advantage of today's increasing demand for forest products.

Until now, the main economic barrier has been the high cost of selecting and sorting the choice species from among the heterogeneous stands of trees. One answer is to use the total resource as it occurs naturally--with a minimum of sorting. Perhaps all material could be broken down to fibers or particles and then the mixed fibers or particles reconstituted into such products as pulp, paper, hardboard, and particleboard.

This idea has appeal, for the worldwide demand for paper and wood-based panel products is projected to rise much faster than that for solid wood products.

As yet, however, no full-scale operation is producing pulp of export market quality from a woods-run mixture of tropical hardwoods.

The few mills that use secondary species tend to select the more favorable woods to maintain production efficiencies and product quality. Such mills generally use a recipe approach but this requires degrees of sorting the material--as contrasted to woods-run. Although many studies have been made of pulping response and properties of various tropical hardwood species handled individually, it is clear that full utilization of tropical woods will not occur by promoting individual species.

Rather, the raw material should be directed to its highest order of use--technically and economically. Equally important, the tropical forests must be handled to provide for their continued regeneration and protection of other important non-timber values.

As mixed as tropical forests are, similarities appear in composition and form, even between widely dispersed timber stands. Holdridge (7)[1/] has quantified the forest shape on the basis of life zones defined by rainfall, temperature, and evapotranspiration. Recent studies at the Forest Products Laboratory show distribution patterns of wood specific gravity for tropical American species do conform to certain Holdridge life zones (3). Specific gravity was chosen for the probe because it correlates well with many important wood characteristics and pulp quality. If it can be demonstrated that the total wood resource, as well as the forest form, reflects the environmental conditions of a life zone, then processes can be developed based on this particular wood mix, regardless of species composition. Results would be applicable to large forest tracts, wherever located, that have the same life zone classification.

This report describes progress toward establishing commercially viable production facilities that can process natural mixes of hardwoods into products the developing countries can use and sell.

Objectives

1. Develop a technically and economically feasible processing system for making pulp, paper, and panel products from naturally occurring mixtures of tropical hardwoods and for utilizing residuals to provide the energy requirements for the processing.

2. Design a pre-investment package based on Objective 1, as applied to Latin America, Africa, and Asia. Then disseminate, publicize, and demonstrate it to potential investors to prove the commercial viability of building and operating a mill based on the new technology and the mixed tropical wood resource.

Benefits of achieving these objectives include (1) providing jobs in the developing country's rural forested areas and at the mill site; (2) production of paper and paper products for local use and export; (3) stimulation of new ancillary industries such as books and newspapers, packaging, and materials for residential, commercial, and industrial

---

1/ Underlined numbers in parentheses refer to material listed in the references, begining on p. 62.

construction; (4) savings of foreign exchange through import substitutions; and (5) development of export markets both to neighboring countries and abroad.

The multiplier effect is obvious, with secondary impact upon education, housing, business, and the general welfare of the country. It may also make other projects, such as highway building and clearing for agriculture, more cost effective by utilizing wood that would be otherwise wasted.

Scope of Project

Mixtures of wood simulating those found in the principal climatic and geographic areas of the lowland moist tropical forests were used. This approach was selected so that the information developed can be applied to any similar forest area of the tropics where even limited data on wood characteristics are available or can be readily obtained.

The basic premise for the research was that wood density is the most critical factor in determining the quality of products obtainable from a raw material supply. Other factors such as silica and extractives in the wood were also included because these have been associated with certain processing and product quality problems.

Three countries in three different parts of the world were selected for sampling the wood resource. These were the Philippines (representing Southeast Asia), Ghana (Africa), and Colombia (Latin America). With each, three chip mixtures were selected to simulate the density distribution patterns described earlier (3). In one, the density distribution was uniform, in the second the higher densities were favored, and in the third the medium densities were dominant.

These mixtures were then used for both exploratory tests and for pilot-scale runs on a variety of products--market pulp, newsprint, school paper, tissue, linerboard, corrugating medium, hardboard, and particleboard. The pulping, papermaking, and hardboard research was conducted at the Forest Products Laboratory, Forest Service, USDA, in Madison, Wisconsin, while the particleboard research was conducted at the College of Forestry, University of Minnesota in St. Paul, Minnesota.

The feasibility of storing mixed tropical hardwoods outside in a tropical atmosphere was determined by the Forest Products Research and Industrial Development Commission (FORPRIDECOM), College, Laguna, Philippines with the cooperation of the Paper Industries Corporation of the Philippines (PICOP) at their mill in Bislig, Surigao del Sur, Philippines.

The silvicultural and environmental implications of any-species utilization were reviewed through extensive literature searches by Professor David M. Smith of the College of Forestry & Environmental Studies, Yale University, and by Associate Professor John J. Ewel of the Department of Botany, University of Florida.

A preliminary industrial survey or base-case study, evaluating concepts developed from the research for any-species harvesting and full utilization of the tropical hardwood resource, was conducted by Charles T. Main, Inc., of Boston, Massachusetts. This survey considered Southeast Asia primarily and noted significant differences in Africa and Latin America.

To disseminate the information developed, an International Conference on Improved Utilization of Tropical Forests was held in Madison, Wisconsin, on May 21-26, 1978.

Personnel Involved

1. In the Research

Richard J. Auchter, Tropical Hardwoods Program Manager, Forest Products Laboratory, directed the research program, chaired the planning committee for the International Conference on Improved Utilization of Tropical Forests, participated in the Conference, and coordinated preparation of the summations of the Conference for inclusion into the Proceedings of the Conference.

Martin Chudnoff, Forest Products Technologist, Forest Products Laboratory, along with Dr. Wahlgren, traveled to and procured the wood samples from Colombia. He also provided much sound advice during the project.

John J. Ewel, Associate Professor, Botany Department, University of Florida, conducted an extensive literature search regarding the environmental implications of any-species utilization and participated in the Conference by presenting his results.

Donald J. Fahey, Forest Products Technologist, Forest Products Laboratory, directed the paper and paperboard research and assisted in the preparation of papers for presentation at the Conference.

Roland O. Gertjejansen, Professor, Department of Forest Products, College of Forestry, University of Minnesota, directed the particleboard research and participated in the Conference by presenting his results.

Robert C. Koeppen, Botanist, Forest Products Laboratory, along with Mr. Laundrie, traveled to and procured the wood samples from the Philippines and Ghana. He also identified and determined the anatomical features and densities of the woods, served on the planning committee for the International Conference, and participated in the Conference by presenting his results.

John W. Koning, Jr., Forest Products Technologist, Forest Products Laboratory, directed the corrugated container research and assisted in the preparation of a paper for presentation at the Conference.

James F. Laundrie, Chemical Engineer, Forest Products Laboratory, along with Dr. Koeppen, traveled to and procured the wood samples from the Philippines and Ghana. He also directed the pulping and bleaching research, provided technical supervision for the outside chip storage study in the Philippines, served as chairman of the International Conference on Improved Utilization of Tropical Forests, participated in the Conference by presenting his results, and assumed the duties of

Forest Products Laboratory Tropical Hardwoods Program Manager with the retirement of Mr. Auchter in July 1977.

Gary C. Myers, Forest Products Technologist, Forest Products Laboratory, conducted the hardboard research and participated in the Conference by presenting his results.

David M. Smith, Professor, School of Forestry & Environmental Studies, Yale University, conducted a literature search regarding silvicultural implications of any-species utilization.

Harold E. Wahlgren, Forest Products Technologist, Forest Products Laboratory, along with Mr. Chudnoff, traveled to and procured the wood samples from Colombia. He also directed part of the bark studies and participated in the Conference by serving as session moderator.

2. On the Project Steering Committee

Richard J. Auchter (ex-officio), Tropical Hardwoods Program Manager, Forest Products Laboratory, Forest Service, Madison, Wis.

Edward F. Cliff, Forestry Consultant, 221 N. Royal St., Alexandria, Va.

James Cooperman, Industry and Mining Branch, Office of Engineering, Development Support Bureau, Agency for International Development, Washington, DC.

John J. Ewel, Associate Professor, Department of Botany, University of Florida, Gainesville, Fla.

H. Charles Ladenheim, Utilization Branch, Program Office, Development Support Bureau, Agency for International Development, Washington, DC.

William H. Littlewood, Office of Science and Technology, Development Support Bureau, Agency for International Development, Washington, DC.

Walter E. Parham, Office of Science and Technology, Development Support Bureau, Agency for International Development, Washington, DC.

Donald F. Root, Director of Fiber Products Research and Development, Weyerhaeuser Company, Tacoma, Wash.

Richard A. Skok, Dean, College of Forestry, University of Minnesota, St. Paul, Minn.

David M. Smith, Professor, School of Forestry & Environmental Studies, Yale University, New Haven, Conn.

3. On Planning Committee for the International Conference for Improved Utilization of Tropical Forests

Richard J. Auchter, Tropical Hardwoods Program Manager, Forest Products Laboratory, Forest Service, Madison, Wis.

Thomas H. Ellis, Project Leader, Forest Products Laboratory, Forest Service, Madison, Wis.

Hans M. Gregersen, Professor, College of Forestry, University of Minnesota, St. Paul, Minn.

Robert C. Koeppen, Project Leader, Forest Products Laboratory, Forest Service, Madison, Wis.

James F. Laundrie, Chemical Engineer, Forest Products Laboratory, Forest Service, Madison, Wis.

Harry Leslie, Information Specialist, Forest Products Laboratory, Forest Service, Madison, Wis.

Roman Link, Information Specialist, Forest Products Laboratory, Forest Service, Madison, Wis.

John McGovern, Emeritus Professor, College of Forestry, University of Wisconsin, Madison, Wis.

Necmi Sanyer, Project Leader, Forest Products Laboratory, Forest Service, Madison, Wis.

Frank H. Wadsworth, Director, Institute of Tropical Forestry, Rio Piedras, Puerto Rico.

RESULTS OF MIXED TROPICAL HARDWOOD RESEARCH

Wood Procurement and Analysis

Sampling

Three developing countries on different continents were selected for sampling the wood resource. These were, in the order sampled, the Philippines (representing Southeast Asia), Ghana (Africa), and Colombia (Latin America). The method of sampling for each location was the same. From the literature, species with preselected values for specific gravity and silica and extractives contents were designated as potential samples; thus the chosen specific gravity distribution mixtures could be simulated, low and high contents of silica and extractives would be available, and a range of color from light to dark would be present.

Fifty species were sampled in the Philippines, 22 in Ghana, and 18 in Colombia. The greater sampling in the Philippines was due to the scheduled broader range of effort for the first sample and the plan to use subsequent samples primarily for verification of the first results.

The wood was shipped to the Forest Products Laboratory where it was debarked, sampled for analysis, chipped, and stored in a cold room for subsequent use (8,18).

Anatomical Features

Age determination for the sample trees was not attempted, but it can be assumed that most material was of young trees since the maximum log diameter was about 30 cm. All fiber measurements were made from whole fibers of macerated material using a transmitted light microscope. All fiber material was stained with saffranin for better differentiation and, hence, more accurate measurements (table 1).[2/]

The average fiber lengths of all specimens sampled varied from 0.7 mm for *Dacryodes klaineana* of Ghana to 2.8 mm for *Dillenia philippinensis* of the Philippines. The average for all 90 species sampled is 1.58 mm, which is slightly longer than the average fiber length of about 1.32 mm for North American hardwoods commonly used for pulp production. The average of all specimens measured from each country was quite similar:

2/ Tables of data begin on p. 42.

Philippines (90 trees, 50 species)--1.57 mm; Ghana (22 trees, 22 species)--1.54 mm; Colombia (51 trees, 18 species)--1.7 mm.

Fiber wall thickness showed a greater range of variation than did the fiber length. The thickest wall measured was 14.5 μ from Dillenia philippinensis, which also has the longest fiber measurement. Sterculia oblonga had the lowest average wall thickness with 2.1 μ. The overall average for the cell wall thickness of the 90 trees sampled is 5.6 μ, which is, again, somewhat higher than the 4.7 μ range of North American woods normally pulped. By country, the Colombia sample had the thickest average cell wall with 6.2 μ, Ghana second with 5.7 μ, and the Philippines the thinnest with 5.3 μ.

The Runkel Ratio[3/] is commonly used as an indicator of pulp quality for papermaking. A ratio of less than one usually indicates very good papermaking characteristics. The overall Runkel Ratio for these tropical woods sampled is 1.4, which indicates relatively poor papermaking qualities. However, by removing the ten species having the highest ratios, the overall ratio drops to 0.85--indicating a very good mix for paper production (8).

Composition and Chemical Analysis of Mixtures

The woods from each country had a broad range of specific gravity and were divided into six groupings, based on our specific gravity measurements. The original intention was to group the woods as follows:

Less than 0.3	0.5-0.6
0.3-0.4	0.6-0.7
0.4-0.5	Greater than 0.7

However, in order to have nearly the same number of woods in each grouping and, in some instances, to have more than one species in a group, the actual specific gravity range for each grouping varied slightly from those listed above (see table 2 for final groupings).

Three distinctive chip mixtures were made with the woods from each country:

Mixture A--Specific gravity distribution was uniform
Mixture B--Higher specific gravity species dominated
Mixture C--Medium specific gravity species dominated

3/ The Runkel ratio is twice the fiber wall thickness divided by the diameter of the fiber lumen.

Full details concerning the names and amounts of individual species in each mixture are given in A.I.D. Reports 1, 7, and 8 (11,13,14).

Weighted specific gravity averages of the nine A, B, C, mixtures are summarized below:

Average specific gravity of tropical hardwood mixtures

	Mixture		
	A	B	C
Philippines	0.505	0.643	0.538
Ghana	.470	.604	.487
Colombia	.510	.667	.544

Chemical analysis.--All nine A, B, C mixtures were analyzed to determine pH and amount of ash, silica, lignin, and extractives (table 3). Except for the amounts of lignin, chemical analyses of the mixtures were markedly similar. The Philippine mixtures had the greatest amount of lignin, while the Ghanaian mixtures had the least.

Special mixtures for thermomechanical pulping.--For producing thermomechanical pulps (TMP), special mixtures were also made of only the lowest density, lightest colored woods. With the Philippine woods, three special mixtures were made to contain either 3, 5, or 24 species. Another mixture containing only the four lowest density, lightest colored Ghanaian woods was also made for the production of thermomechanical pulp. Full details concerning the individual species in these special mixtures are given in A.I.D. Reports 2 and 7 and in the addendum to A.I.D. Report 2 (13,19,20).

Bark

Analysis of the individual barks from the Philippine species showed large variations in ash, silica, and extractives. The ash content of the individual barks ranged from 1 to 36 percent and was always much greater than the ash content of the wood. Silica content was also much greater in the bark than in the wood and ranged from a trace to over 34 percent. The amount of ether extractives ranged from a trace to over 10 percent while the amount of hot water extractives ranged from 2 to over 20 percent. The largest quantities of extractives were in the alcohol-benzene fractions which ranged from 3 to over 24 percent. Kraft pulp yields of

the individual Philippine barks ranged from 7 to 34 percent, but the generally high silica contents preclude consideration of whole-tree utilization concepts for the production of fiber. The heating value of the individual Philippine barks ranged from 4,800 to 9,000 Btu per pound of dry bark.

Because the most likely use of bark will be as fuel, mixtures containing equal weights of each bark from each of the three resources were made and analyzed. These results are summarized below:

Bark mixture from	Ash	Silica	Heating value
	Pct	Pct	Btu/lb
Philippines	10.0	3.7	7,547
Ghana	10.6	2.2	7,642
Colombia	5.2	1.2	8,311

Additional detailed information regarding bark studies can be found in A.I.D. Report 10 (29).

Technical Feasibility of Products

Market Grades of Bleached Kraft Pulps

Both semibleached and fully bleached kraft pulps were made successfully from mixtures of tropical hardwoods from the Philippines, Ghana, and Colombia--all involving the uniform density distributions. Cleanliness and strength properties of these pulps were as good or better than those of pulps made from temperate zone hardwoods and presently available on the commercial market. Full details of the procedures, pulping and bleaching conditions, and properties of these pulps are given in references (12,14).

Tropical hardwood mixtures required slightly more alkali than temperate zone hardwoods to obtain fully cooked slush pulps. These mixed tropical hardwood kraft pulps also have larger amounts of residual lignin and require more bleaching chemicals to obtain comparable brightness levels. Because higher amounts of lignin and extractives are generally found in

tropical hardwoods, pulp yields are also slightly lower than those of pulps from temperate zone hardwoods.

The semibleached pulps were all about equal in strength. Likewise the fully bleached pulps were about equal in strength. However, the fully bleached pulps were stronger than the semibleached pulps--even after drying on the paper machine. The main reason for the differences is that less expensive, and more degrading, hypochlorite was used in preparing the semibleached pulp. When the viscosities of all pulps were compared, some degradation of the semibleached pulps was obvious (tables 4 and 5).

Commercial use of either semibleached or fully bleached market-grade kraft pulps from mixed tropical hardwoods from any of the three areas should present only minor technical problems. The papermaker might have temporary acceptance problems because of working with a new and unfamiliar raw material, but this would be resolved quickly with experience.

Thermomechanical Pulps for Use in Papers

Two of the Philippine mixtures (3- species and 5-species mixtures of the lighter colored species) and the one Ghanaian mixture (4 species) produced strong, easily bleached, thermomechanical pulps comparable to or better than similar pulps made from temperate zone hardwoods. Thermomechanical pulp made from a Philippine mixture containing 24 species was adequate in strength but deficient only in brightness. This could be expected since many of the individual species in this mixture were dark colored. Properties of these thermomechanical pulps are given in table 6.

Papers

Hardwood mixtures from the tropics are suitable for the manufacture of newsprint, tablet, toweling, and tissue papers, both toilet and facial.

Newsprint.--Acceptable quality newsprint for world markets was made with as much as 90 percent Philippine hardwood pulps (70 percent bleached thermomechanical pulp from three of the lower density, light-colored species, 20 percent Philippine hardwood kraft pulp, and 10 percent commercial long-fiber sulfite pulp). Newsprint with acceptable properties was also made from 100 percent Philippine hardwood pulp (70 percent thermomechanical and 30 percent kraft), but some long fiber is generally considered necessary for satisfactory runnability, both during papermaking and printing. Bleaching of the thermomechanical pulp was necessary for matching the brightness of Canadian and U.S. newsprint. The

number of species and the range of specific gravity of the species used in making the bleached thermomechanical pulp can be increased, but at the expense of brightness. Such a paper would probably be suitable for local markets, because its brightness was as good as newsprint now produced in the Philippines:

	Bursting strength	Brightness
	Points	Percent
Philippine hardwood TMP:		
3 species	9.2	62
24 species	11.5	47
Philippine newsprint	7.5	45
U.S. newsprint	9.6	58

Verification of the results with the Ghanaian wood mixture indicate the general feasibility of using tropical hardwoods from other forest regions for newsprint manufacture.

Tablet paper.--Paper suitable for tablet was made with as much as 80 percent Philippine hardwoods. Up to 20 percent of the furnish can be hardwood thermomechanical pulp and still be comparable with U.S. paper, but this will require bleaching even when using only the light-colored species. For some local markets, use of larger quantities of thermomechanical may be practicable.

Toweling and tissue papers.--Good quality toweling and sanitary tissue papers were made with as much as 80 percent Philippine hardwood kraft pulp. It was also shown that half of the hardwood kraft pulp could be replaced with Philippine hardwood thermomechanical pulp. The toweling and toilet tissue were wet creped, while the facial tissue was dry creped for the high softness and absorbency characteristic of this particular grade.

Further details are given in tables 7, 8, and 9, and in references (13,19-22).

Paperboards

Hardwood mixtures from the Philippines and Colombia were successfully converted into the linerboard components used in corrugated fiberboard containers. A lubricant was required to obtain corrugating medium with satisfactory runnability characteristics.

Linerboard.--Nominal 42-pound-per-thousand-square-foot linerboard was made from 50 percent Philippine or Colombian hardwood high-yield kraft pulp and 50 percent western U.S. kraft pulp, and evaluated for its strength properties. The results indicated that the bursting strength properties were below the present nominal U.S. standard of 100 points. The application of a 2-1/2 percent starch to the surface of the linerboard significantly improved the bursting strength.

Corrugating medium.--Hardwood mixtures from the Philippines, Colombia, and Ghana were evaluated as potential sources for pulp fiber for corrugating medium. The results indicated that corrugating medium made from 100 percent of these mixed hardwood species fractured when corrugated at speeds below 20 feet per minute with minimum sheet tension. The use of oleic acid or the application of polyethylene to the surfaces of the corrugating medium resulted in significant improvements in the runnability characteristics of the corrugating mediums (23).

Corrugated Fiberboard Containers

Corrugated medium and linerboards made from high-yield kraft pulp were successfully converted into corrugated fiberboard and subsequently into containers and evaluated in terms of the compressive and impact resistance of the finished container. Results indicated that the compressive strength was equal or slightly lower than the softwood control, but the impact resistance was equal or better. Further details are given in tables 10, 11, 12, and 13, and references (2,9,10).

Hardboards

Hardwood mixtures from Colombia, Ghana, and the Philippines were found suitable for the manufacture of basic hardboard, hardboard siding, and furniture core material. The high-density boards were comparable to boards now produced in the Philippines from hardwood mixtures.

For dry-formed boards to meet the requirements of U.S. Voluntary Product Standard (PS 58-73) for basic hardboard, 2 percent or less resin would be needed when using the Philippine or Ghanaian mixtures, and about 3 percent resin when using the Colombian mixture (table 14). Acceptable wet-formed hardboards can be made from tropical hardwood mixtures with less than 1 percent resin (table 14).

Dry-formed, medium-density hardboards made with 8 percent urea resin had excellent surface and finishing characteristics, which are desirable features for furniture core stock. While the strengths were lower than the average of U.S. boards of comparable density (table 15), they could be improved by adding more resin or increasing the board density.

Medium-density hardboards with 8 percent phenol-resorcinol resin exceeded the requirements of the Voluntary Product Standard for hardboard siding (table 16).

The energy requirement of 6 horsepower days per ton of air dry pulp to produce hardboard-quality fiber from the Colombian and Ghanaian mixtures was comparable to that required for U.S. hardwoods. The Philippine mixtures were even easier to fiberize, requiring about half the power. Further details are given in references (25,26,28).

Particleboards

Hammermilled Philippine hardwood chip mixtures A, B, and C and urea-formaldehyde resin levels of 5 and 8 percent produced satisfactory particleboards. Boards also were manufactured from planer shavings of mixture C and from steamed and unsteamed ring-flaked chips of mixture A (table 17).

All strength properties increased with an increase in either resin content or board density. Linear expansion and thickness swelling were reduced by an increase in resin content but were not significantly affected by density. There were no differences between boards from ring-flaked steamed or unsteamed chips; these two boards were superior in modulus of rupture, modulus of elasticity, and linear expansion (but not in internal bond and thickness swelling) to the boards from furnishes of hammermilled chips and planer shavings. Of the three furnishes from hammermilled chips, mixture B generally had properties inferior to the other two. The properties of the planer shavings boards were intermediate to those from furnishes of hammermilled chips and ring-flaked chips, except for thickness swelling where the planer shavings boards were superior.

The strength properties of all the interior-type boards made with urea-formaldehyde compared favorably with the U.S. Commercial Standard CS 236-66, but the maximum allowable linear expansion was, with one exception, met only by the boards from ring-flaked furnishes. Exterior-type boards made with phenol-formaldehyde resin from mixture A hammermilled chips met the minimum property requirements of Commercial Standard boards at 8 percent resin level but did not meet modulus of rupture and modulus of elasticity minimums at the 5 percent resin level. Loss of modulus of rupture after accelerated aging was 50 percent or less for both resin contents. Further details are given in reference (6).

Processing Problems

Chipping

All of the tropical hardwood logs used in this project had the bark removed, prior to chipping, in a 47-inch-diameter, four-knife, Carthage chipper. The chips were screened to remove the oversized and undersized materials by using a gyrating screen having 1-1/4- and 1/4-inch square-holed screens.

With both the Philippine and the Colombian species, the largest amounts of total rejects were found with the highest density woods. In the Ghanaian species, woods in the same high density range produced very few rejects. Regardless of source, some of the lowest density woods also produced large amounts of rejects, but these were mostly of oversize materials which could be rechipped. Whenever there were larger amounts of rejects from the higher density woods, those rejects were mostly in the form of fines.

The most difficult species to chip was the Colombian wood "Caimo," which had a specific gravity of 0.86 and gave about 55 percent rejects. The main problem with this species was that the chipper knives became dull very rapidly even though this species contained only 0.55 percent silica. With the Philippine species "Antipolo," which contained 4.6 percent silica and had a specific gravity of 0.47, no chipper knife dulling problems occurred.

Other types of chippers and knives were not evaluated because that was beyond the scope of this project. However, these results do indicate potential chipping problems from a variety of causes including wood structure, the amount of silica, wood specific gravity, chipper and knife design, and knife metallurgy (17).

Separation of Chips from Heavy Species

A major premise of this project was that chips of higher specific gravity species could be separated from the mixtures to provide fuel, resulting in an expected improvement in quality of the pulp produced from the remaining chips. The feasibility of successfully doing this via air classification was demonstrated and reported in A.I.D. Reports 1 and 7 (11,13).

However, air classification was successful only because both the Philippine and the Ghanaian woods lost some moisture between harvesting and the time when they were converted into chips at the Forest Products Laboratory. It would have been impossible to air classify chips made

from freshly harvested wood because the wet weight, wet volume specific gravity of all the woods fell into a very narrow range. Some of the lightest woods, on the basis of dry weight, wet volume when freshly cut, contain enough moisture to make them as heavy as the truly denser woods.

Should air cla sification of chips be necessary to provide either fuel or improved pulp quality, then consideration must be given to determining the best method of drying the wood. Because of the high humidity and frequency of rainfall in most of the tropical forests being considered for implementation of these findings, drying of the chips, with perhaps waste heat in the flue gasses, would appear to be the most reasonable approach (17).

Silica

The problem of silica in the wood as it affects the chipping operation has already been mentioned. However, in the kraft pulping of these woods, most of the silica will be dissolved into the cooking liquor. Shown below are the effects of black liquor recycling on the distribution of silica. Four cycles were made on woods with three levels of silica--0.3, 1.0, and 4.6 percent. In each of these cycles one-half of the total water-to-wood ratio was undiluted black liquor from the previous digestion.

Cycle	Silica in black liquor Percent	Silica in pulp Percent
	Philippine Mixture C--0.3 Percent Silica	
1	0.05	0.08
2	--	.08
3	.07	.09
4	.08	.07
	Philippine Mixture C Enriched With Two High-Silica Species--1.0 Percent Silica	
1	.08	.30
2	.15	.32
3	.13	.29
4	.14	.31
	Philippine Wood--Antipolo (*Artocarpus blancoi*)--4.6 Percent Silica	
1	1.1	.30
2	1.4	.29
3	1.3	.30
4	1.5	.26

Recycling of the black liquor did not increase the amount of silica remaining with the pulps.

The levels of silica in the black liquors reached maximums after only two to three cycles. These maximums, however, increased with increasing amounts of silica in the wood.

With 1.5 percent silica in the black liquors, severe problems could occur, such as reducing evaporator capacity by forming a scale of sodium silicate or other insoluble silicate compound on the evaporator tubes. In the recovery furnace, silicate compounds are known to gradually form deposits on the walls and between boiler tubes. When silica accumulates in the causticizer, the sedimentation rate of lime sludge is greatly reduced. These problems need to be considered in designing a kraft pulpmill for utilizing tropical hardwoods containing silica (17).

Corrugating Medium Runnability

Semichemical pulps were made from mixtures of tropical hardwoods by the neutral sulfite, kraft, green liquor, and soda-carbonate processes and converted into nominal 26-pound-per 1,000-square-foot corrugating medium on the Forest Products Laboratory experimental Fourdrinier paper machine. The mediums were evaluated for resistance to fracturing on the laboratory corrugator by increasing the speed from 0 to 600 feet per minute with a minimum of sheet tension, and then increasing the sheet tension while at a constant speed of 600 feet per minute.

Most mediums failed to corrugate at less than 20 feet per minute with a minimum of sheet tension. Decreasing the neutral sulfite pulp yield from 74 to 65 percent, refining the pulp more to give better bonding, and lowering the paper machine headbox consistency to give a better formed sheet did not improve runnability through the corrugator. Increasing the sulfidity of the kraft pulping liquor from 25 to 50 percent was also ineffective. Surface frictional tests, microscopic examinations, and chemical analysis failed to reveal causes for the poor performance of the mediums through the corrugator.

Adding oleic acid to the paper machine furnish to act as a lubricant, or passing the medium over polyethylene bars as it was being fed to the corrugator, effectively overcame this runnability performance of mediums made from such semichemical pulps. Further research is also needed to develop better test methods for predicting the runnability of corrugating mediums (23).

Outside Chip Storage

This study was conducted by the Forest Product Research and Industries Development Commission (FORPRIDECOM), College, Laguna, Philippines, under contract with the USAID Mission in the Philippines. Overall technical supervision was provided by U.S. Forest Products Laboratory.

The Paper Industries Corporation of the Philippines (PICOP) provided the site at Bislig, Surigao del Sur, Philippines, for the experimental chip pile and provided the personnel and equipment necessary to build the chip pile and to recover the chip samples at the required time intervals. The species and type of wood chipped represent the usual run-of-the-mill material used in the regular commercial production of kraft pulp.

A chip pile with the final dimensions shown in figure 1 was constructed. As the dump trucks brought the chips from the temporary pile near the pulp mill building and unloaded them at the experimental pile site, representative samples were set aside while the pile was being built up

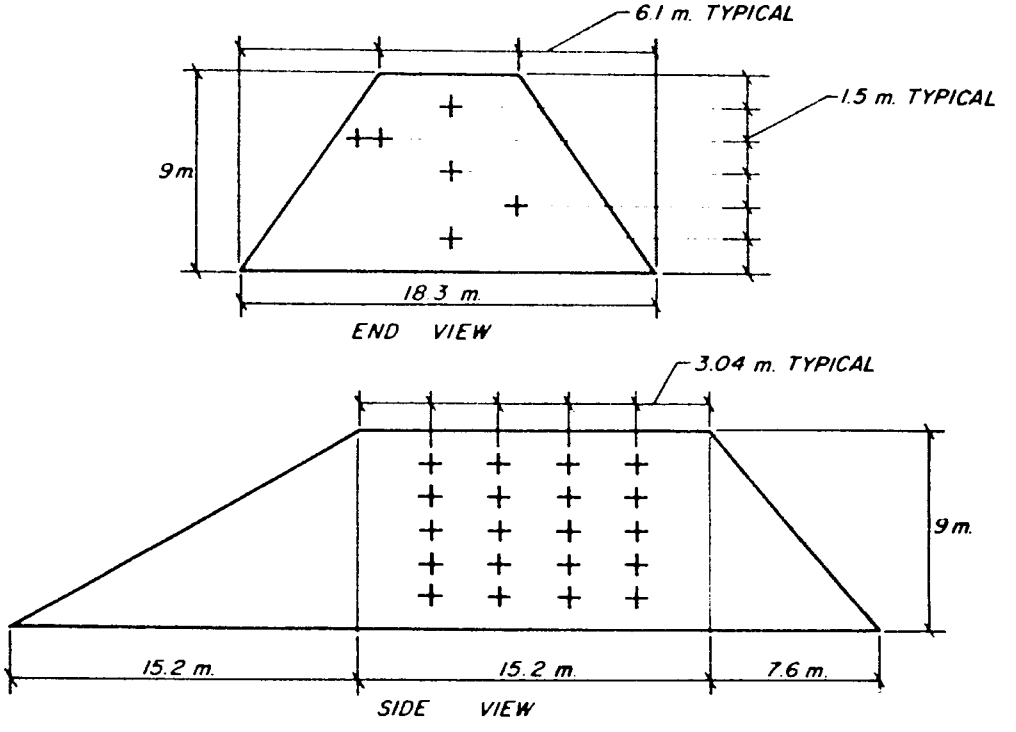

M 148 054

Figure 1.--Design of experimental chip pile.

to the first 1.5-meter-high layer. Eighty-eight large nylon mesh bags were each filled with the thoroughly mixed samples set aside initially.

As the first 1.5-meter level was attained, four filled nylon bags were placed at each of the designated four sample points. A thermocouple was inserted on one of the bags at each sample point. The four bags at each sample point were tied with a polypropylene rope of sufficient length that a 5-meter length protruded from the side of the chip pile. The free length of the rope was intended to serve as a guide in subsequent recoveries of the sample bags. The same procedure was followed for every additional 1.5-meter-high addition to the chip pile until the required number of sample points was installed.

Eight sample bags set aside were placed within polyethylene bags in order to maintain the moisture content of the chips. This constituted the control samples brought to FORPRIDECOM.

Using the ropes protruding from the sides as a guide to the approximate location of the chip samples in sacks, a bulldozer was used to recover the samples. After the recovery of the samples for each time interval, the shape of the chip pile was restored as much as possible to the original. Upon recovery of the sacks, they were immediately placed inside thick plastic polyethylene sacks to avoid moisture loss. Recovery time took about 4 hours.

The control samples and the samples withdrawn from the pile after 3, 6, 9, and 12 months' storage were brought from Bislig by air cargo to the FORPRIDECOM laboratories in Northern Philippines. Total travel time was about 3.5 hours. Upon arrival at the laboratory, the chip samples were immediately placed in a cold-storage room. Samples for chemical analysis, pathological study, and pulping were withdrawn as necessary.

Contrary to the experience on other outside chip storage sites, the moisture content of the chip pile, even in the lowest portions, actually increased over that of the original moisture content in the fresh chips. In only 3 months, the moisture content of the pile down to 3 meters from the top increased from 49.8 percent to 60.8 percent. In 12 months of storage, the average moisture content of the entire pile increased to 65.1 percent.

Weight-loss rate of the chips was greatest during the first 3 months of storage at 1.36 percent per month.

Kraft pulp yields from the stored chips, based on the digester charge, were higher than those from the control chips. Based on the original chips, pulp yield was significantly higher for the control chips than for the stored chips. Up to 9 months' storage, the burst, tear, and

tensile strengths of the pulp were not adversely affected. Residual lignin in the pulp decreased with chip storage, even at 3 months.

Neutral sulfite semichemical pulp strengths from the stored chips were relatively lower than those of the control chips. Pulp yields on the stored chips, based on the digester charge, increased for up to 9 months' storage. However, based on the fresh, original chips, pulp yields from the stored chips decreased.

It is expected that storage of the chips, even for 3 months, should reduce pitch troubles during pulp and paper manufacture since unsaponifiables decreased by 52 percent, fatty acids by 42 percent, and combined acids by 20 percent.

Due to the high moisture content and the relatively low temperatures attained in the chip pile there is no danger from fires in the chip pile in the area of Bislig or any similar area with well-distributed and relatively high rainfall. Further details are given in reference (1).

PRELIMINARY INDUSTRIAL SURVEY

C. T. MAIN, Inc., was retained by the Forest Products Laboratory to conduct a Preliminary Industrial Survey of Tropical Hardwoods Utilization (24,30). The basis of this assignment was research directed at the harvesting and utilization of the run-of-the-woods species in the tropical forests of Southeast Asia, Latin America, and Africa. This survey gave primary consideration to Southeast Asia and determined significant differences for Latin America and Africa.

The survey called for preliminary engineering and cost analyses of a system to harvest and transport run-of-the-woods tropical hardwoods to a processing plant and convert the logs to chips of a quality suitable for the manufacture of market pulp and reconstituted building products, with any remainder to be used for fuel.

The survey also called for preliminary estimates for a totally new facility for producing 500 tons per day of bleached market kraft pulp and 100 tons per day of hardboard with fuel needs based on wood.

Included was determination of the impact to an existing pulp mill using wood with properties similar to temperate zone hardwoods.

MAIN also developed a checklist of infrastructure necessary and desirable for efficient operation, recommended implementation procedures, discussed

the marketing considerations and presented a financial analysis of the facility.

The following conclusions were reached:

A. Harvesting and Manufacturing
New 500 Tons Per Day (T/D)
Kraft Pulp Mill

It is technically possible to harvest run-of-the-woods tropical hardwoods, convert this material to chips and manufacture market grades of bleached kraft pulp. It is also technically possible to substitute wood for most of the oil normally used as fuel for generation of process steam and power.

The financial viability of this pulp mill was examined on the basis of the before-tax discounted cash flow return on equity and debt service ratio which could be generated. The information developed from the financial analysis indicates that at an investment cost of $266,000,000, a direct manufacturing cost of $213.80/Air Dry Metric Ton and current market prices for pulp, a negative return on equity would result. Variations in the assumptions on investment cost, manufacturing costs and sales price demonstrate the sensitivity of return on equity to each of these factors. Reference to figure 2, Sensitivity Tests, indicates that changes in selling price have almost twice the effect on the internal rate of return as do changes in investment or manufacturing costs. Accordingly, it was learned that, at an F.O.B. mill price of $375/Ton, the before-tax return on equity would be marginal; at $425/Ton the before-tax return on equity would be approximately 8 percent; at $475/Ton the before-tax return on equity would be 12 percent.

Clearly under present conditions this would not appear to be a viable project if the pulp mill is considered exclusively on its own merits.

Considerations which may alter the above conclusions include the following:

Governmental Incentives.--Most pulp mill projects in developing countries have been sponsored by or assisted by the national government of that country. The government may contribute a percentage of the total investment cost as a grant in order to provide an incentive for other investors. The government may pay for general development costs such as the woodlands and infrastructure; or provide low interest loans, tax incentives,

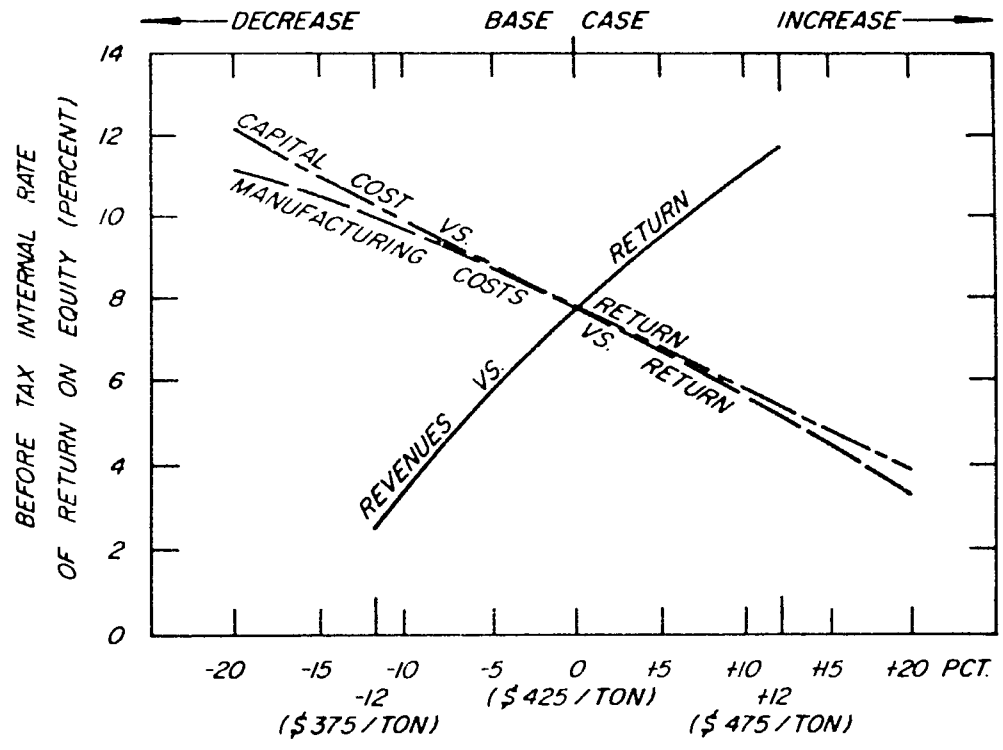

M 148 053

Figure 2.--Sensitivity tests--internal rate of return on investment

or tariff protection. Any one or all of the above governmental incentives may be offered in order to improve the return on equity.

Specific Local Need.--If the pulp is sold in local markets, the savings on shipping charges will favorably affect the return on equity.

Marketing.--At present, there is an oversupply of hardwood kraft pulp on the world market. This has caused a reduction in the sales price. Indications are that, with the new hardwood kraft mills in Brazil coming into production, the oversupply will continue in the immediate future. Additional pulp mills being planned in Brazil, Southeast Asia, and Africa may also add to the oversupply. However, the 1990 consumption projections for Japan and Western Europe show a potential market opportunity for hardwood kraft pulp as an import.

Employment.--This facility will provide direct employment for 1,340 people. While the capability is developed in a technical chemical process industry, there will be a need for 975 people who may be totally unskilled. Other studies conducted by MAIN in developing countries have shown that a major industrial complex can support a population approximately 15 times the number of people directly employed. This employment multiplier effect arises from the need for goods and services to the facility and its employees.

Economy.--This study is limited to a financial analysis of the pulp mill as it would apply to private investors. By analyzing the social opportunity, costs of labor, capital and foreign exchange components, it would be possible to determine the potential benefits to the country as a whole. Therefore, an economic analysis is recommended for application of this study to a particular site in a developing country.

Size of Pulp Mill.--MAIN's experience indicates that a 700 T/D pulp mill is closer to an optimum size. Revenues would be 40 percent greater, while the total investment would only rise approximately 22 percent. For any particular site in a developing country, it is recommended that an in-depth study be made to determine the optimum mill size and that a marketing study be included.

100 T/D Hardboard Plant.--The preliminary capital costs for a 100 T/D hardboard plant have been estimated. The hardboard plant is assumed to be part of the total operation of a new site 500 T/D market pulp mill.

A description is given in the survey of a typical hardboard process, supplemented with a list of major equipment. Building and space requirements are shown for the plant on the overall millsite general arrangement.

Total plant investment requirements have been estimated at $19,000,000. This figure includes plant capital, startup costs, working capital, and interest during construction.

Raw materials, services, and manpower requirements are given on a data sheet for use in preparing operating costs in a future study of a specific site.

It is assumed that most of the production of a hardboard plant would be marketed locally. Future marketing studies of a specific site are suggested to determine the market situation at that particular time and location.

A procedure is given for determining the economic feasibility of a hardboard plant, once the selling price and market are established.

B. Impact to an Existing Pulp Mill

The use of mixed tropical hardwood for pulp wood and the substitution of wood for oil as fuel in a steam-generating boiler requires no new technology. The financial justification for conversion of an existing kraft pulp mill, however, will vary for each specific mill and location.

The first requirement is to analyze the investment costs necessary to maintain production at the existing level. Characteristics of mixed tropical hardwoods are such that more productive capacity will generally be required than for temperate zone hardwoods in the wood processing, pulp digesting, liquor evaporation, recovery boiler, and liquor preparation systems. A boiler designed for mixed fuel (hog fuel and oil) will be less efficient when using larger percentages of fuel wood. Each processing area must, therefore, be studied to determine the cost to obtain the original production when using the new pulp wood.

The potential savings should then be calculated based upon the cost difference for mixed tropical pulpwood vs. present (selectively harvested) pulpwood; and fuel wood vs. fuel oil. The cost of each of these components will be highly dependent upon the specific location selected.

Since optimization of profits is one of the goals, the information developed can be used to determine the point at which benefits from the use of mixed tropical hardwood for pulp and fuel are greatest. An example is presented in the survey to show the cost savings resulting from the use of wood as fuel; and, by comparing these savings to the capital costs of a new wood fuel boiler, indicates the attractiveness of this investment. Under present market conditions, it may be desirable to accept some reduction in production to obtain the savings from the use of fuel wood.

ENVIRONMENTAL CONSIDERATIONS

There is not much factual information on the environmental problems which might result from intensified utilization of forests in the humid tropics. Furthermore, the heterogeneity of the forests and diversity of soils is immense, and the environmental problems encountered would vary greatly from place to place. The environmental consequences are also inextricably linked to silvicultural practices. Therefore, the potential environmental problems would direct the choice of silvicultural techniques to use.

Based on a detailed review of the literature, the potential impact of increased intensity of utilization on soils and nutrients, water resources, genetic information, and animals was identified (4).

Impact on Soils and Nutrients

Deep, well-weathered tropical soils which form under conditions of high rainfall, high uniform temperatures, and high rates of organic matter turnover are tightly linked to the vegetation growing upon them. When that link is broken by harvesting the vegetation, the soil characteristics change. Under conditions of moderate, short-term disturbance those changes are usually temporary, but if the disturbance is severe and prolonged the changes are sometimes irreversible.

Erosion is one of the most conspicuous results of humid tropical forest utilization. All studies of erosion and its relation to logging of humid tropical forests indicate that erosion does increase during and after logging, and if logging is followed by fire, erosion is even greater. Most studies indicate a general decline in erosion as regrowth develops, although erosion may continue in local, highly disturbed areas for many years.

Perhaps the most important potential loss, is the removal of nutrients in harvested biomass. This is of considerable importance in tropical forests where the bulk of the nutrients are incorporated in the vegetation, rather than in the soil as in most temperate zone forests. Nutrient depletion of tropical forests through wood removal is also a potentially serious problem and one which must be given strong consideration if increased rates of harvesting are anticipated. It is unwise to couple utilization technology with use of the whole tree. It would be advisable to contemplate delimbing at the felling site because a high proportion of the nutrients within a tree are in the leaves and small branches rather than in the main stem. Debarking in the woods would also be worthwhile. It would return a small additional amount of nutrients to the site and would keep the high-silica bark out of the mill.

The least conspicuous, but perhaps the most important, potential effect of forest utilization on the soil is that on the micro-organisms. These organisms are important in nutrient cycling and maintenance of soil porosity. The limited number of soil micro-organism studies indicate that some bacterial, fungal, and soil arthropod populations decrease following site disturbance. Some of the soil bacteria and algae are nitrogen fixers and, as such, may be crucial components of the forest's nitrogen cycle.

Impact on Water

Because the combined effects of evaporation and transpiration from a forest result in greater water returned to the atmosphere than that resulting from bare-soil evaporation alone, it is generally true that removal of the forest cover results in greater total annual water yield via runoff and streamflow. In some cases this additional water yield may be a welcome additional resource, but more often than not it occurs as a rushing torrent of post-storm water which frequently inundates agricultural floodplains.

The scant data available from the tropics indicate that sediment loads in streams increase two- to four-fold after forest clearing, with immediate post-logging sediment pulses sometimes being fifty times greater than those on comparable forested watersheds. In addition to mineral sediments, the input of organic matter into streams may decrease water quality by increasing the oxygen demand as well as causing increased turbidity. Unless a site is severely disturbed and seed sources are removed, however, tree cover again develops rapidly in the humid lowland tropics, so the increased mineral and organic sediment load following harvesting should drop quickly.

Impact on Genetic Information

Numerous scientists have called attention to the potential loss or degradation of genetic material due to destruction of tropical forests. Gene pool degradation can be broken down into two types. First, there is the "genetic erosion" which occurs when trees with sound boles and good form are selectively harvested in preference to individuals with undesirable characteristics, which are left to provide the seed for the next crop.

Second, and perhaps more serious a problem than the potential for genetic erosion, is the possibility that entire species, many unknown to science, can be lost forever by mismanagement of the forest resource. The material subject to loss consists not only of the species harvested (these, in fact, are probably the least likely to disappear), but the myriad of other species found in diverse tropical forests.

Impact on Animals

Intensive utilization of tropical forests is certain to have a significant impact on animal life, yet this important aspect of tropical forest ecology has been almost completely neglected. Animals certainly play important roles in pollination, dispersal, nutrient cycling, and checking of pest populations. They undoubtedly have a great untapped potential as biological control agents, food resources (domesticated and wild), and recreation as well.

Loss of habitat is clearly the greatest threat to tropical wildlife, and much more of it results from agricultural expansion than from logging. Many animals can tolerate, or even thrive on a certain amount of habitat disturbance. Others, however, such as the endangered orangutan and proboscis monkey of Southeast Asia, are found only in mature, undisturbed forests. Forest utilization thus involves shifts in species composition. The limited evidence available indicates that the magnitude of the induced shifts is approximately proportional to the degree of habitat disruption.

There is no doubt that extensive areas of natural, unmanaged forests will have to be set aside if the rich tropical fauna is to be preserved. One of the main problems associated with the establishment and maintenance of such preserves is the large areas of land required. The area required to sustain populations of 5,000 individuals (an estimated lower limit of population size to maintain most vertebrates) ranges from about 250 to 10,000 km^2, depending on the species involved. Increased intensity of forest management which could result in greater productivity

from less land, coupled with social consciousness and action on the part of public and private forestry agencies, should make possible the preservation of adequate tracts of natural forests in most tropical areas, provided that such steps are taken in the very near future.

SILVICULTURAL CONSIDERATIONS

One key benefit of any-species utilization in moist tropical forests is that it will enable foresters to break out of the bonds of the highly species-selective utilization which has been the curse of silviculture in these forests.

However, close utilization is a two-edged weapon which can be applied for good or evil. Where it is applicable, it has enabled sound and rewarding silviculture. Nevertheless the world is also full of examples in which repetitive close utilization of timber products has reduced forests to scrub or low coppice cover.

Any-species utilization will open or widen many different avenues of silvicultural procedure in moist tropical forests. With any-species utilization it will be more readily possible to use the forest as it is, and less necessary to restrict the composition of future forests to those few species that have been merchantable in the past. It is significant that most silvicultural schemes that have been propounded for moist tropical forests almost axiomatically have been based on the presumption that stand composition had to be simplified.

Heavy Removal Cutting With Natural Regeneration

The simplest option would be heavy removal cutting with natural regeneration. This has not been tried very often in the moist tropics simply because of the difficulty of utilizing everything, or because agricultural usage has typically followed any heavy cutting. Most observations in natural forests indicate that many of these forests are adapted to regenerate after the strong winds have blown down narrow strips of trees. Many of the trees in the new stands seem to come from pre-established advance growth already started beneath the old stands, although some truly new trees arise from either sprouting or newly germinated seeds. Narrow openings probably would come closest to maintaining the natural diversity of species because distances of seed dissemination tend to be short. Wider openings result in greater alteration of microclimate and might tend to increase the proportion of fast-growing, short-lived pioneer species.

Partial Cutting

The opportunity to utilize all species does not necessitate using all species simultaneously. Instead it increases the possibilities for various kinds of partial cutting such as the tropical shelterwood system, in which one or more of the strata that comprise the structure of many moist tropical forests are removed. Efforts to apply such schemes have been discouraging because of the high cost of removing unmerchantable species during or after the partial cuttings. Sometimes they have been counted as failures because they failed to increase the proportion of traditionally merchantable species as much as was hoped. With any-species utilization, what was previously failure can become success. However, the opportunity to use all species ordinarily makes it more possible to increase the proportion of the more valuable ones. Utilization of any species for pulpwood can readily be employed in such a manner as to increase the growth and harvest of fine trees of the kinds that have always been valuable for saw-timber and veneer.

Clearcutting and Planting

It would also be possible to couple full utilization with clearcutting and planting of forests of pure (single species) or mixed composition. It has been fashionable in many circles to view this as a kind of panacea of tropical silviculture, especially with the availability of a number of species with very rapid rates of growth. Many of these same species are ones with desirable pulping properties. The possibility of using such species to provide a sustained yield of pulpwood with a comparatively modest land base is obviously attractive from a variety of standpoints.

This option would normally involve the use of fire, herbicides, or mechanical treatments of the soil, singly or in combination, in the preparation of sites for planting. Therefore, it carries more risk of soil damage than most silvicultural measures that depended on natural regeneration alone or in combination with supplemental planting. While the species selected for planting could be well adapted to the sites, there is also the risk, borne out by some sad experiences, that they might also be subject to unacceptable damage by various pests.

Integration with Agriculture

A fourth option is that of integration with shifting cultivation. Under such schemes, food crops are grown for several years after the forest

is removed and then trees are started in combination with the last crop of food plants when the stored soil organic matter begins to suffer depletion. This approach would often have high social utility because of its compatability with the prevailing mode of subsistence agriculture. However, it is probably associated with much more soil degradation than clearcutting and planting. Nevertheless, any-species utilization would make the clearing of land for agriculture a source of income and the same might well be true of the growing of tree-crop fallow between episodes of cultivation for food. The same would be true of various agro-silvicultural techniques which involve growing tree crops with food or forage plants simultaneously on the same land.

General

These alternatives each include many variants. It is best to think in terms of which approach fits best on a particular site rather than of which single approach is universally superior. Any rational overall forest management plan would probably include a mixture of all general approaches.

The status quo is also a management alternative. However, this is generally not the alternative of leaving forests alone. Most of the moist tropical forests that are sufficiently accessible for any-tree utilization are already subjected to shifting cultivation or the forest-degrading effects of highly selective utilization.

INTERNATIONAL CONFERENCE

An International Conference on Improved Utilization of Tropical Forests was held May 21-26, 1978, in Madison, Wis. The purpose of this conference was to familiarize those attending with the most up-to-date information about utilization of tropical forests. While some emphasis was placed on research that the Forest Products Laboratory recently completed, other research conducted worldwide was also included.

The sessions included an opening general introduction to the tropical forest resource and closing summations of the technical papers; two sessions on silviculture, harvesting, and the environment; two sessions on tropical wood products research; and two sessions on industrial practice and investment considerations.

The first two technical sessions dealt with environmental values of tropical forests and the impacts of more complete use. Silviculture papers addressed both natural regeneration and plantation experience. Harvesting practices and their implications were also covered.

The two sessions on research encompassed a wide variety of reconstituted products and included the experiences of the U.S. Forest Products Laboratory, the British Tropical Products Institute, the French Centre Technique Forestier Tropical, the Pulp and Paper Research Institute of Canada, the Australian Commonwealth Scientific and Industrial Research Organization, and the Philippine Forest Products Research and Industrial Development Commission.

The last two technical sessions covered industrial practice in all three major tropical areas--Africa, South America, and Southeast Asia. Detailed investment considerations including the preliminary industrial survey for market pulpmill and an analysis of problems in process chemical production in developing countries, was also presented.

The Conference had an attendance of 138, including 67 from 23 other countries. The Proceedings of the Conference were published by the U.S. Forest Products Laboratory in 1978 and sent to all of the attendees. The proceedings include the opening, welcoming, keynote, and dinner addresses, all of the technical papers presented, and summations of the technical sessions. Summations of the U.S. Forest Products Laboratory A.I.D. Progress Reports and other research supported by this project are included in the Proceedings (1,4-6,8,10,18,27,30).

Table 1.--Anatomical features and specific gravities of individual hardwoods

Botanical name	Common name	Specific gravity[1/]	Fiber			SiO_2	Ash	Canals
			Length	Wall thickness	Runkel ratio[2/]			
			mm	μ		Pct	Pct	
		GHANAIAN WOODS						
Allanblackia floribunda	Tallow tree	0.54	1.8	5.5	1.05	--	1.73	-
Anogeissus leiocarpus	Kane	.71	1.1	7.3	2.97	0.09	3.62	-
Anopyxis klaineana	Kokoti	.72	1.9	14.1	1.86	--	.25	-
Antiaris africana	Antiaris	.31	1.1	3.6	.40	.20	1.65	+
Canarium schweinfurthii	Canarium	.34	1.1	3.4	.32	.30	1.11	-
Celtis adolfi-friderici	Lokonfi	.55	1.2	4.4	.53	.01	1.41	-
Cleistopholis patens	Otu	.24	1.2	3.6	.21	.02	1.24	-
Dacryodes klaineana	Adjouba	.69	.7	4.6	.63	.52	1.41	-
Discoglypremna coloneura	Akoret	.37	1.4	5.8	.37	.01	1.75	-
Entandrophragma angolense	Gedu nohor	.45	2.0	4.3	.57	--	1.16	-
Guarea cedrata	Scented guarea	.49	1.4	3.4	.56	.11	1.27	-
Hannoa klaineana	Effeu	.28	1.5	3.0	.30	.02	.92	-
Khaya ivorensis	African mahogany	.41	1.5	3.6	.52	--	.54	-
Lophira alata	Ekki	.81	1.9	11.4	5.92	--	.45	-
Musanga cecropioides	African corkwood	.30	1.4	4.4	.25	.04	.81	-
Piptadeniastrum africanum	Dahoma	.44	1.4	5.5	.77	.02	.75	-
Sterculia oblonga	Eyong	59	2.0	2.1	2.65	--	2.47	-
Sterculia rhinopetala	Brown sterculia	.55	2.0	8.0	3.13	--	2.75	-
Strombosia glaucescens	Afina	.70	2.7	13.1	1.93	.01	1.54	-
Tarrietia utilis	Niangon	.46	1.6	5.0	.53	--	.53	-
Tieghemella heckelii	Makore	.50	1.6	4.8	.65	.16	.55	-
Triplochiton scleroxylon	Obeche	.30	1.4	4.9	.64	.01	2.24	-
Average		.51	1.54	5.71	1.21	.10	1.37	-

(Page 1 of 5)

Table 1.--Anatomical features and specific gravities of individual hardwoods--continued

Botanical name	Common name	Specific gravity[1/]	Fiber			SiO_2	Ash	Canals
			Length	Wall thickness	Runkel ratio[2/]			
			mm	μ		Pct	Pct	
		COLOMBIAN WOODS						
Apeiba aspera	Peine mono	0.14	1.7	4.01	0.32	--	3.55	-
Aspidosperma sp.	Carreto	.69	1.8	13.18	6.39	--	.62	-
Brosimum utile	Sande	.49	2.7	4.09	.49	.01	.51	+
Castostemma alstonii	Arenillo	.54	2.5	11.30	6.38	--	1.26	-
Cecropia sp.	Yarumo	.25	1.4	3.43	.16	.02	1.71	-
Ceiba pentandra	Ceiba	.23	1.6	3.07	.20	--	3.73	-
Couma macrocarpa	Perillo negro	.55	1.7	6.01	.58	--	.40	+
Dialium guianense	Tamarindo	.82	1.3	6.23	2.26	1.48	1.82	-
Enterolobium schomburgkii	Carbonero	.63	1.4	4.75	.95	--	.75	-
Hieronyma sp.	Casaco	.60	1.8	8.31	.88	--	.55	-
Helicostylis tomentosa	Lecheperra	.78	1.3	4.44	1.72	.03	1.10	-
Jacaranda copaia	Chingale	.37	1.3	3.70	.29	--	.58	-
Nectandra sp.	Canelo	.55	1.5	4.83	.65	--	.18	-
Neoxythece sp.	Caimo	.86	1.9	12.04	10.83	.55	.95	-
Ormosia paraensis	Chocno	.67	1.6	8.52	1.35	.01	.29	-
Pourouma sp.	Cirpo	.37	1.4	3.85	.26	--	.76	-
Vochysia ferruginea	Dormilon	.45	1.4	4.76	.45	.02	.82	-
Virola sebifera	Sangretoro	.51	1.5	5.62	.74	--	.33	-
Average		.52	1.7	6.23	1.93	30%	1.11	-

Table 1.--Anatomical features and specific gravities of individual hardwoods--continued

Botanical name	Common name	Specific gravity[1/]	Fiber			SiO_2	Ash	Canals
			Length	Wall thickness	Runkel ratio[2/]			
			mm	μ		Pct	Pct	
			PHILIPPINE WOODS					
Alphitonia philippinensis	Tulo	0.42	1.2	3.3	0.50	0.01	0.47	-
Alstonia scholaris	Dita	.32	1.6	3.0	.22	.01	1.08	+
Amoora macrocarpa	Katong-lakihan	.61	1.6	6.5	.88	.03	.84	-
Anisoptera thurifera	Palosapis	.55	1.8	8.5	3.99	.72	1.17	+
Artocarpus blanchoi	Antipolo	.47	1.6	3.0	.30	4.55	5.21	+
Calophyllum obliquinervium	Dangkalan	.57	1.4	4.7	1.06	.01	.65	-
Cananga odorata	Ilang-ilang	.31	1.4	3.0	.22	.02	1.46	-
Canarium luzonicum	Piling-liitan	.55	1.3	4.7	.79	.21	.73	+
Ceiba pentandra	Kapok	.24	1.9	4.1	.40	--	4.45	-
Chistocheton pentandrus	Katong-matsin	.72	1.5	6.8	2.37	.02	.78	-
Dillenia philippinensis	Katmon	.59	2.8	14.5	2.18	.02	1.06	-
Diospyros nitida	Katilma	.68	1.4	4.3	1.55	.02	2.51	-
Diospyros philippinensis	Kamagong	.72	1.1	4.2	1.60	.01	2.98	-
Diospyros philosanthera	Bolong-eta	.74	1.3	3.9	2.01	.02	1.96	-
Dipterocarpus grandiflorus	Apitong	.62	1.7	9.2	4.59	.23	.69	+
Dipterocarpus gracilus	Panau	.58	1.9	9.5	2.61	.43	.93	+
Dysoxylum euphlebium	Miau	.62	1.7	6.9	1.17	.04	1.16	-
Endosperum peltatum	Gubas	.32	2.0	5.9	.33	.01	.62	-
Erythrina subumbrans	Rarang	.26	1.9	2.9	.23	--	1.61	-
Erythrophloeum densiflorum	Kamatog	.65	1.6	4.5	1.03	.01	1.62	-
Ficus variegata	Tangisang-bayauak	.24	1.3	2.6	.17	.02	3.64	+
Homalanthus populneus	Balanti	.36	1.5	3.4	.31	.01	1.17	-
Hopea foxworthyi	Dalingdingan	.67	1.4	6.3	2.66	.04	.70	+
Lagerstroemia piriformis	Batitinan	.60	1.3	5.8	1.36	.01	3.56	-
Leucaena leucocephala	Ipil-ipil	.74	1.9	4.7	.81	.01	.91	-

(Page 3 of 5)

Table 1.--Anatomical features and specific gravities of individual hardwoods--continued

Botanical name	Common name	Specific gravity[1/]	Fiber			SiO_2	Ash	Canals
			Length	Wall thickness	Runkel ratio[2/]			
			mm	μ		Pct	Pct	
		PHILIPPINE WOODS--con.						
Litchi philippinensis	Alupag-amo	.79	1.1	5.5	1.48	.01	1.10	-
Lithocarpus soleriana	Manaring	.74	1.7	8.1	3.53	.02	.79	-
Macaranga bicolor	Hamindang	.32	1.6	2.9	.24	.02	1.46	-
Madhuca oblongifolia	Malabetis	.56	1.6	4.7	.83	2.19	3.01	-
Mangifera altissima	Pahutan	.44	1.0	2.7	.37	.02	2.91	-
Mastixia philippinensis	Apanit	.45	2.8	12.3	1.30	.10	1.72	-
Melicope triphylla	Matang-arau	.38	1.4	4.0	.39	.43	1.05	-
Meliosma macrophylla	Balilang-uak	.26	1.9	3.8	.30	.04	1.34	-
Octomeles sumatrana	Binuang	.24	1.6	2.8	.24	--	1.32	-
Parashorea plicata	Bagtikan	.48	1.4	3.2	.47	.01	1.42	+
Pentacme contorta	White lauan	.40	1.6	4.4	.57	.06	.72	+
Pygeum vulgare	Lago	.45	1.4	3.7	.45	.01	.50	-
Sandoricum vidalii	Malasantol	.39	1.4	4.0	.34	.01	.61	-
Shorea astylosa	Yakal	.72	1.6	7.8	.38	.03	.92	+
Shorea negrosensis	Red lauan	.51	1.8	6.3	.84	.03	.09	+
Shorea polysperma	Tangile	.43	1.5	3.7	.44	.08	.20	+
Shorea squamata	Mayapis	.37	1.5	3.8	.36	.04	.36	+
Swintonia foxworthyi	Lomarau	.56	1.4	4.2	.68	.10	1.00	+
Syzigium nitidum	Makaasim	.79	1.4	8.1	4.49	.03	.78	-
Terminalia nitens	Sakat	.49	1.5	4.1	.51	.10	.68	-
Trema orientalis	Anabiong	.32	1.4	2.8	.22	--	1.00	-
Vatica mangachapoi	Narig	.62	1.5	8.5	4.70	.22	.74	+
Weinmannia luzoniensis	Itangan	.53	1.7	7.8	1.40	.01	1.52	-
Xanthophyllum excelsum	Miau	.64	1.5	9.1	2.30	--	1.11	-
Zanthoxylum rhetsa	Kaitana	.30	1.2	3.0	.30	.01	.75	-

(Page 4 of 5)

Table 1.--Anatomical features and specific gravities of individual hardwoods--continued

Botanical name	Common name	Specific gravity[1/]	Fiber			SiO_2	Ash	Canals
			Length	Wall thickness	Runkel ratio[2/]			
			mm	μ		Pct	Pct	
		PHILIPPINE WOODS--con.						
Average		0.51	1.57	5.35	1.32	.22	1.38	-

1/ Green volume-ovendry weight.
2/ Twice thickness of cell wall divided by the width of the lumen.

Table 2.--Composition of tropical hardwood mixtures

Percent in mixtures[1/]			Philippines		Ghana		Colombia	
A	B	C	Range in specific gravity	Number of species	Range in specific gravity	Number of species	Range in specific gravity	Number of species
16.67	2	4	0.236-.296	6	0.241-.302	4	0.225-.250	2
16.67	4	8	.308-.394	9	.312-.370	3	.369-.372	2
16.67	9	20	.401-.485	9	.413-.450	3	.447-.511	3
16.67	15	40	.501-.597	10	.460-.499	3	.536-.547	3
16.67	20	20	.608-.697	8	.540-.589	4	.603-.671	3
16.67	50	8	.718-.793	8	.692-.808	5	.692-.859	4

1/ Moisture-free weight basis.

Table 3.--Chemical analysis of tropical hardwood mixtures

Mixture	pH	Ash[1/]	SiO_2[1/]	Lignin[1/]	Extractives[1/]		
					Ethyl ether	Alcohol benzene	Hot water
		Pct	Pct	Pct	Pct	Pct	Pct
				PHILIPPINES			
A	5.37	1.45	0.19	30.80	0.76	4.14	3.45
B	5.09	1.38	.12	31.75	.91	4.05	3.28
C	5.06	1.39	.28	31.60	.75	3.78	3.05
				GHANA			
A	5.63	1.26	.08	26.64	.51	4.07	2.76
B	5.23	1.47	.08	27.72	.10	3.32	2.38
C	5.65	1.16	.06	25.62	.46	4.07	2.50
				COLOMBIA			
A	5.71	.94	.06	28.71	.33	3.84	3.79
B	5.81	.91	.28	28.60	.34	3.15	3.89
C	5.59	.68	.04	29.51	.31	3.66	3.70

1/ Moisture-free wood basis.

Table 4.--Semibleached kraft pulps from mixtures of tropical hardwoods

Pulp condition and freeness (Can. Stand.)	Kappa number	Total chlorine[1/]		Bright-ness	Bleached pulp yield	Viscosity	Beating time	Burst factor	Tear factor	Breaking length	Apparent density
		Applied	Consumed								
ML		Pct	Pct	Pct	Pct	CP	Min			Km	G/cm³
Philippines[2/]	22.8	8.0	7.9	76.4	44.6	8.7					
Unbleached											
550							11	48	121	8.6	0.59
350							32	73	116	11.5	.67
Semibleached											
550							3	34	118	6.3	.62
350							26	65	108	9.8	.69
Ghana[3/]	20.9	6.0	5.5	76.0	43.2	7.3					
Unbleached											
550							9	50	130	8.8	.60
350							27	82	119	12.2	.69
Semibleached											
550							0	41	102	6.5	.64
350							18	67	87	9.3	.71

1/ CEH bleach
2/ Mixture "A" of 47 species. A.I.D. Report No. 6 (12).
3/ Mixture "A" of 22 species. A.I.D. Report No. 7 (13).

Table 5.--Fully bleached kraft pulps from mixtures of tropical hardwoods

Pulp condition and freeness (Can. Stand.)	Kappa number	Total chlorine[1/] Applied	Total chlorine[1/] Consumed	Bright-ness	Bleached pulp yield	Viscosity	Beating time	Burst factor	Tear factor	Breaking length	Apparent density
ML		Pct	Pct	Pct	Pct	CP	Min			Km	G/cm³
Philippines[2/]	22.8	8.5	8.5	88.8	43.7	11.6					
Unbleached											
550							11	48	121	8.6	0.59
350							32	73	116	11.5	.67
Bleached and dried											
550							6	42	113	5.7	.63
350							33	60	120	9.1	.70
Ghana[3/]	22.8	[4/]7.3	6.9	85.0	42.3	10.2					
Unbleached											
550							9	50	130	8.8	.60
350							27	82	119	12.2	.69
Bleached and dried											
550							6	22	112	4.3	.60
350							27	48	117	7.4	.68
Colombia[5/]	27.6	8.9	8.5	86.0	43.2	10.2					
Unbleached											
550							10	45	117	8.5	.61
350							25	63	108	10.4	.67
Bleached and dried											
550							12	24	123	4.9	.60
350							32	46	113	10.4	.67

1/ CEDED bleach.
2/ Mixture "A" of 47 species. A.I.D. Report No. 6 (12).
3/ Mixture "A" of 22 species. A.I.D. Report No. 7 (13).
4/ Based inadvertently on a Kappa number of 20.4.
5/ Mixture "A" of 17 species. A.I.D. Report No. 8 (14).

Table 6.--Properties of thermomechanical pulps from selected species of tropical hardwoods

Species in mixture	Freeness (Canadian Standard)	Burst factor	Tear factor	Breaking length	Apparent density	Brightness	Scattering coefficient	Opacity
	Ml			Km	G/cm^3	Pct	Cm^2/g	Pct
				PHILIPPINE				
3	170	7.0	39.6	2.2	0.42	66.1	655	90.0
5	105	11.4	32.6	3.0	.45	67.2	673	91.4
24	115	9.2	27.6	2.3	.42	51.0	690	96.9
				GHANA				
4	120	13.7	40.6	3.5	.54	66.8	662	90.8

Table 7.--Properties of newsprint (nominal 32-lb, or 52 g/m^2) from Philippine and Ghanaian woods in comparison with commercial papers[1/]

Source	Hardwood	Thickness	Bursting strength	Tearing resistance, average	Tensile strength, average	Opacity	Scattering coefficient	Brightness (Elrepho)	Smoothness, average (Bekk)
	Pct	Mil	Points	Grams	Lb/in. of width	Pct	Cm^2/g	Pct	Second
Philippine	2/ 80	3.2	9.4	21.6	8.7	87.4	494	58.1	19.5
	3/ 90	3.9	9.2	24.5	8.4	85.0	489	61.9	16.3
	4/ 100	3.6	10.4	19.5	9.7	89.8	487	61.4	20.8
	5/ 90	3.5	11.5	26.8	10.6	91.3	503	46.5	25.9
Ghana	90	3.1	11.6	26.1	11.3	83.6	507	66.0	31.9
Commercial:									
Philippine	--	3.6	7.5	19.9	5.8	92.2	660	45.3	--
Canadian	--	3.5	6.0	17.7	7.7	91.2	456	54.6	28.3
U.S.--South	--	3.8	9.6	37.6	9.2	93.1	486	57.6	23.0

1/ Tested according to TAPPI Standard methods.
2/ Bleached thermomechanical pulp--three lighter colored woods; remainder long-fiber sulfate pulp.
3/ 70 pct bleached thermomechanical pulp (three lighter colored woods in Philippine mixture and four in Ghanaian mixture), 20 pct hardwood kraft, and 10 pct long-fiber.
4/ 70 pct bleached thermomechanical pulp (three lighter colored woods) and 30 pct hardwood kraft.
5/ Same furnish as in footnote 3/ but 24 lower density woods were used for thermomechanical pulp.

Table 8.--Properties of tablet papers from different amounts of Philippine hardwoods (16-lb paper or 60 g/m²) compared to a United States commercial paper[1/]

Ratios of pulp[2/]	Thickness	Bursting strength	Tearing resistance, average	Tensile strength, average	Porosity (Gurley)	Opacity	Brightness (Elrepho)	Smoothness, average (Bekk)
Pct	Mil	Points	Grams	Lb/in. of width	Second/ 100 cm³	Pct	Pct	Second
			80 PERCENT PHILIPPINE HARDWOOD					
60-20-20	3.4	22.4	45.0	17.9	11.3	82.8	78.4	22.9
45-35-20	3.4	18.3	39.2	15.2	15.4	82.5	76.7	21.0
			90 PERCENT PHILIPPINE HARDWOOD					
40-50-10	3.8	17.9	35.1	15.1	23.8	85.8	75.8	18.0
			COMMERCIAL U.S. TABLET					
	3.2	23.9	50.9	16.7	13.4	83.6	81.8	42.4

1/ Tested according to TAPPI Standard methods.
2/ The first quantity is the percentage of kraft pulp, the second is percentage of thermomechanical pulp, and the last the percentage of long-fiber kraft pulp.

Table 9.--Properties of sanitary tissues and toweling made from various percentages of hardwood kraft pulps[1/]

Product	Hardwood kraft[2/]	Tensile strength, machine direction	Stretch, machine direction	Water absorbency, (0.1 cm^3)	Softness, overall
	Pct	Lb/in. of width	Pct	Second	
Facial tissue	80	0.42	21.4	46.4	1,184
	40	1.03	27.6	65.2	418
Toilet tissue	80	1.15	6.0	31.1	420
	40	1.66	10.2	49.8	266
Creped toweling	80	8.60	7.9	33.8	26
	40	6.40	7.4	18.4	33

1/ Tested according to TAPPI Standard methods.
2/ All furnishes contained 20 pct commercial long-fiber bleached kraft pulp and the furnishes with 40 pct kraft also had 40 pct hardwood bleached thermomechanical pulp (three of the lighter colored species).

Table 10.--Properties of linerboard[1/] made from various mixtures of tropical hardwood unbleached kraft and western softwood[2/] unbleached kraft

Properties	Control[3/]	Philippine hardwoods, machine run No.[4/]		Colombian hardwoods, machine run No.[5/]	
		7143	7144	7161	7162
Weight: Square meters.....g	205	212	219	209	212
1,000 square feet.....lb	42.0	43.6	45.0	43.0	43.6
Thickness.....mils	12.2	12.0	11.7	12.4	11.9
Density.....g/cm^3	0.66	0.70	0.74	0.67	0.70
Bursting strength.....pts	114	78	102	66	88
Tearing resistance:					
Machine direction.....g	313	351	351	322	346
Cross direction.....g	328	366	355	370	352
Folding endurance:					
Machine direction.....double folds	408	2,030	2,068	942	1,035
Cross direction.....double folds	432	951	997	533	913
Ring crush:					
Machine direction.....lb	152	115.0	134.6	113.0	134.1
Cross direction.....lb	112	86.0	108.1	87.5	107.9
Tension:					
Maximum stress:					
Machine direction.....lb/in.^{2}	8,420	7,380	8,830	5,870	7,080
Cross direction.....lb/in.^{2}	3,680	3,240	3,930	3,180	3,790
Modulus of elasticity:					
Machine direction..1,000 lb/in.^{2}	864	1,018	1,030	994	1,288
Cross direction....1,000 lb/in.^{2}	378	369	430	407	444
Strain to failure:					
Machine direction.....pct	2.2	1.3	1.7	1.5	1.7
Cross direction.....pct	6.3	4.1	5.4	3.3	4.2
Thickness[6/].....mils	11.3	10.7	10.8	11.2	11.1

1/ All linerboard furnishes were treated with H_2SO_4 to a pH of 7.0, 1 pct rosin size added, and the pH adjusted to 5 with alum.

2/ All western softwood refined to approximately 670 ml Canadian Standard freeness.

3/ The control was 100 pct southern pine kraft, disk refined, 500 ml Canadian Standard freeness, with no surface sizing.

4/ Both runs made from screen accepts of high-yield cooks, Kappa No. 72.3, 50 pct tropical hardwood unbleached kraft, 50 pct western softwood unbleached kraft, 540 ml Canadian Standard freeness, in a conical refiner. Machine run 7143 had no sizing; 7144 had 2.2 pct starch surface sizing.

5/ Both runs made from screen accepts of high-yield cooks, Kappa No. 85.0, 50 pct tropical hardwood unbleached kraft, 50 pct western softwood unbleached kraft, 520 ml Canadian Standard freeness, in a conical refiner. Machine run 7161 had no sizing; 7162 had 2.1 pct starch surface sizing.

6/ Thickness measurements made using the procedure described by Setterholm (Tappi, Vol. 57, No. 3, Mar. 1974).

Table 11.--Properties of corrugating medium made from various 100 percent mixtures of tropical hardwoods

Properties[1/]	United States hardwoods, machine run No. 6929[2/]	Philippine hardwoods, machine run No. 7136[3/]	Philippine hardwoods, machine run No. 7137[2/]	Colombian hardwoods, machine run No. 7160[3/]	Colombian hardwoods, machine run No. 7157[2/]
Base sheet freeness, Canadian Standard.....ml	410	240	355	290	350
Weight: Square meters.....g	127	127	128	122.9	126.9
1,000 square feet.....lb	26.0	26.0	26.3	25.2	26.0
Thickness.....mils	10.1	8.5	10.0	9.2	9.5
Density.....g/cm³	.49	.59	.50	.52	.52
Bursting strength.....pts	40	41	46	33	42
Tearing resistance:					
Machine direction.....g	70	120	78	108	92
Cross direction.....g	78	123	93	110	106
Folding endurance:					
Machine direction.....double folds	7	191	43	57	34
Cross direction.....double folds	8	98	29	36	35
Water absorbency (0.1 cm³):					
Wire.....sec	13	98	16	--	--
Felt.....sec	13	94	18	--	--
Ring crush:					
Machine direction.....lb	62.1	59.7	78.6	62.9	72.4
Cross direction.....lb	51.0	46.8	57.7	47.8	56.4
Tension:					
Maximum stress:					
Machine direction.....lb/in.²	5,920	4,920	5,300	4,380	5,170
Cross direction.....lb/in.²	3,240	2,980	2,710	2,550	2,890
Modulus of elasticity:					
Machine direction..1,000 lb/in.²	768	566	583	620	650
Cross direction....1,000 lb/in.²	374	343	269	310	315
Strain to failure:					
Machine direction.....pct	1.6	2.2	1.9	1.6	2.1
Cross direction.....pct	2.8	4.8	3.5	3.7	3.3
Thickness[4/].....mils	7.0	7.2	8.6	8.1	8.2
Concora (CMT).....lb	64.5	62.8	81.0	53.0	67.1

1/ All tests according to TAPPI standard methods except as indicated.
2/ Neutral sulfite semichemical.
3/ Kraft screenings.
4/ Thickness measurements made using the procedure described by Setterholm (Tappi, Vol. 57, No. 3, March 1974).

Table 12.--Physical properties of the combined board made from high-yield tropical hardwood kraft[1/]

Properties	Control[2/]	Philippine hardwoods, machine run No.		Colombian hardwoods, machine run No.	
		7143-7136-7143	7144-7136-7144	7161-7160-7161	7162-7160-7162
Starch.....pct	0	0	2.2	0	2.1
Basis weight.....lb/M ft²	130.0	129.4	131.6	126.6	129.9
Burst.....pts	257	196	246	135	171
Coefficient of variation.....pct	7.7	9.0	8.7	5.7	8.6
Pin adhesion:					
Single face side.....lb/in.	3.76	5.03	3.46	4.99	5.35
Coefficient of variation.....pct	8.8	8.6	6.5	20.6	17.4
Double back side.....lb/in.	6.90	6.70	5.50	6.09	5.75
Coefficient of variation.....pct	7.4	4.5	9.8	18.5	13.4
Flat crush.....lb/in.²	27.4	28.0	28.5	20.7	21.3
Coefficient of variation.....pct	5.7	3.9	4.2	2.3	2.6
Short column compression:					
80° F, 30 pct relative humidity.....lb/in.	--	60.3	71.8	53.5	61.2
Coefficient of variation.....pct	--	3.0	4.3	7.05	5.4
73° F, 50 pct relative humidity.....lb/in.	63.7	54.8	64.0	48.5	54.0
Coefficient of variation.....pct	2.2	3.0	3.0	4.45	3.6
80° F, 90 pct relative humidity.....lb/in.	30.9	25.4	27.6	22.2	29.5
Coefficient of variation.....pct	4.2	4.4	3.4	5.6	3.7
Flexural stiffness:[3/]					
Parallel to length.....lb/in.	109.0	105.5	116.9	117.2	134.3
Coefficient of variation.....pct	3.0	4.0	2.2	4.3	5.7
Perpendicular to length.....lb/in.	230	272	285.6	202	233
Coefficient of variation.....pct	8.6	16.5	15.7	6.83	8.4
Scoreline cracking[4/] (scores parallel to flutes):					
80° F, 30 pct relative humidity.....pct	19.7	63.1	47.2	22.7	44.7
73° F, 50 pct relative humidity.....pct	3.1	27.6	18.7	0	4.6
75° F, 90 pct relative humidity.....pct	0	1.9	0	0	0

1/ All conditioning and testing done at 75° F, 50 pct relative humidity unless otherwise noted.
2/ Control was 100 pct southern pine kraft pulp.
3/ 4-point bending; flutes parallel and perpendicular to specimen length.
4/ Score wheel clearance was 0.031 in. for scoring tests. For scoring the boxes, the clearance was 0.052 in.

Table 13.--Properties of containers made from high-yield tropical hardwood kraft[1/]

Material	Starch	Top-to-bottom compression[2/] 8-in.-high containers				Top-to-bottom compression[2/] 3-1/4-in.-high containers				Side-to-side compression (3-1/4-in.-high containers)				End-to-end compression (3-1/4-in.-high containers)				Impact resistance[3/]
		Load	CV[4/]	Deformation	CV	Load	CV	Deformation	CV	Load	CV	Deformation	CV	Load	CV	Deformation	CV	
	Pct	Lb	Pct	In.	Pct	Lb	Pct	In.	Pct	Lb	Pct	In.	Pct	Lb	Pct	In.	Pct	In.
Control (100 pct southern pine)	0	917 483	8.5 29.1	0.82 .50	7.0 0.0	676	6.1	0.45	16.3	412	8.7	0.34	36.7	283	5.8	0.26	15.4	81
PHILIPPINE																		
[5/] 7143-7136-7143	0	687 512	2.7 23.1	.28 .50	34.4 0.0	635	4.6	.53	20.0	336	5.2	.32	9.0	259	3.2	.33	11.4	98
7144-7136-7144	2.2	835 620	7.0 19.7	.81 .50	19.2 0.0	720	6.4	.54	7.4	[6/] 423	7.5	.38	9.3	[6/] 311	4.1	.36	19.3	94
COLOMBIAN																		
7161-7160-7161	0	570 502	7.4 11.1	.57 .50	4.1 0.0	478	4.6	.43	4.1	332	11.8	.40	29.3	218	6.4	.32	25.8	77
7162-7160-7162	2.1	703 540	8.4 17.1	.68 .50	16.7 0.0	560	6.0	.45	6.4	373	11.8	.36	21.9	252	10.7	.31	21.7	94

1/ All conditioning and testing done at 73° F, 50 pct relative humidity.
2/ Containers were 10-3/4 by 8-1/16 in. in perimeter (length x width).
3/ Single drop of container with 12-lb can load.
4/ Coefficient of variation.
5/ Paper machine run numbers; full description given in tables 10 and 11.
6/ Average of 5 tests; other values, average of 10 tests.

Table 14.--Properties of hardboards made from various chip mixtures and resin contents

Chip mixture	Resin content	Modulus of rupture	Internal bond	Thickness swelling, 50 to 90 percent relative humidity
	Pct	Lb/in.^{2}	Lb/in.^{2}	Pct
		PRODUCT STANDARD 58-73		
	--	5,000	100	16.0 (S1S) 18.0 (S2S)
		DRY-FORMED HARDBOARD (S2S)		
Colombia	2	3,080	97	12.2
	4	7,020	198	6.9
Ghana	2	5,100	192	10.9
	4	8,080	303	6.9
Philippine A	2	7,560	213	9.1
	4	8,990	304	7.8
Philippine B	2	7,200	197	9.1
	4	7,890	224	9.3
		WET-FORMED HARDBOARD (S1S)		
Colombia	1	8,110	431	8.8
Ghana	1	8,380	354	9.3
Philippine A	1	6,620	120	12.6
Philippine B	1	5,720	102	13.9
		REGULAR COMMERCIAL PHILIPPINE HARDBOARD		
	--	6,990	285	7.0

Note: S1S refers to smooth one side; S2S to smooth two sides.

Table 15.--Properties of dry-formed medium-density hardboards made with 8 percent urea resin

Chip mixture	Modulus of rupture	Internal bond	Linear movement between 50 and 90 percent relative humidity
	Lb/in.^{2}	Lb/in.^{2}	Pct
Colombia	3,340	142	0.15
Ghana	3,870	134	.15
Philippine A	3,910	120	.20
Philippine B	3,580	104	.16
U.S. Boards	4,880	153	.47

Table 16.--Properties of dry-formed medium-density hardboards made with 8 percent phenol-resorcinol resin

Chip mixture	Modulus of rupture	Linear movement between 50 and 90 percent relative humidity	Chip mixture	Modulus of rupture	Linear movement between 50 and 90 percent relative humidity
	Lb/in.^{2}	Pct		Lb/in.^{2}	Pct
Colombia	3,570	0.11	Philippine B	4,170	0.13
Ghana	4,530	.11	Product Standard (PS 60-73)	1,800	.40
Philippine A	4,730	.14			

Table 17.--Properties of particleboards made from mixtures of Philippine hardwoods

Treatment No.	Species mixture	Resin content	Modulus of elasticity	Modulus of rupture	Internal bond	Linear expansion 1/	Total thickness swelling 1/	Irreversible thickness swelling 2/
		Pct	M lb/in.^{2}	Lb/in.^{2}	Lb/in.^{2}	Pct	Pct	Pct
				HAMMERMILLED CHIPS				
1	A	5	398	2,700	192	0.37	17.9	12.9
2	A	8	440	3,090	270	.31	13.1	8.7
3	B	5	371	2,210	161	.37	16.1	10.9
4	B	8	402	2,440	267	.30	11.1	7.8
5	C	5	430	2,640	221	.38	16.0	11.6
6	C	8	456	3,110	290	.27	11.8	8.5
				RING-FLAKED CHIPS, UNSTEAMED				
7	A	5	634	4,080	145	.18	14.8	10.7
8	A	8	670	4,590	180	.15	11.1	7.9
				RING-FLAKED CHIPS, STEAMED				
9	A	5	614	4,100	146	.19	14.2	10.1
10	A	8	656	4,700	186	.16	11.1	7.1
				PLANER SHAVINGS, UNSTEAMED				
11	C	5	470	3,090	164	.35	12.6	8.3
12	C	8	533	3,780	235	.33	9.1	5.5

1/ From equilibrium at 50 pct relative humidity to equilibruim at 90 pct relative humidity.
2/ From equilibrium at 50 pct relative humidity to equilibrium at 90 pct relative humidity to equilibrium at 50 pct relative humidity.

REFERENCES[4/]

1. Bawagan, P. V., and J. A. Semana
   1978. Outside storage in the Philippines. In Proceedings of Conference on Improved Utilization of Tropical Forests, p. 217-258.

2. Bormett, D. W., J. F. Laundrie, and D. J. Fahey
   1977. Linerboard, corrugating medium, and corrugated containers from mixtures of Colombian hardwoods. A.I.D. PASA No. AG/TAB-995-3-75, U.S. Forest Products Laboratory A.I.D. Report No. 14.

3. Chudnoff, Martin
   1976. Density of tropical timbers as influenced by climatic life zones. Commonwealth Forestry Review 55,3.

4. Ewel, John J., and L. Conde
   1978. Environmental implication of any-species utilization in the moist tropics. In Proceedings of Conference on Improved Utilization of Tropical Forests, p. 106-123.

5. Fahey, D. J., and J. F. Laundrie
   1978. Market pulp and white papers from mixed tropical hardwoods. In Proceedings of Conference on Improved Utilization of Tropical Forests, p. 355-370.

6. Gertjejansen, R. O., D. W. Haavik, H. F. Carino, S.P.A. Okoro, and H. J. Hall
   1978. Properties of particleboards from mixtures of Philippine hardwoods. In Proceedings of Conference on Improved Utilization of Tropical Forests, p. 397-412.

7. Holdridge, L. R., W. C. Grenke, W. H. Hathaway, T. Liang, and J. A. Tosi, Jr.
   1971. Forest environments in tropical life zones: A pilot study. Pergamon Press, New York.

4/ Single copies of these references are available. Address inquiries to Agency for International Development, U.S. Department of State, R & D Report Distribution Center, P.O. Box 7366, Riverdale Station, Hampton, Va., 23666, U.S.A.

8. Koeppen, R. C.
1978. Some anatomical characteristics of tropical woods. In Proceedings of Conference on Improved Utilization of Tropical Forests, p. 69-80.

9. Koning, J. W., Jr., J. F. Laundrie, and D. J. Fahey
1977. Linerboard, corrugating medium, and corrugated containers from mixtures of Philippine hardwoods. A.I.D. PASA No. AG/TAB-995-3-75, U.S. Forest Products Laboratory, A.I.D. Report No. 9.

10. Koning, J. W., Jr., J. F. Laundrie, D. J. Fahey, and D. W. Bormett
1978. Linerboard, corrugating medium, and corrugated containers from mixtures of tropical hardwoods. In Proceedings of Conference on Improved Utilization of Tropical Forests, p. 371-386.

11. Laundrie, J. F.
1976. Exploratory kraft and NSSC pulping of mixtures of 50 Philippine hardwoods. A.I.D. PASA No. AG/TAB-995-3-75, U.S. Forest Products Laboratory, A.I.D. Report No. 1.

12. Laundrie, J. F.
1976. Bleached kraft pulps from mixtures of Philippine hardwoods. A.I.D. PASA No. AG/TAB-995-3-75, U.S. Forest Products Laboratory, A.I.D. Report No. 6.

13. Laundrie, J. F.
1977. Ghanaian hardwood mixtures for pulp and paper. A.I.D. PASA No. AG/TAB-995-3-75, U.S. Forest Products Laboratory, A.I.D. Report No. 7.

14. Laundrie, J. F.
1977. Exploratory kraft and NSSC pulping and production of a bleached market-grade, kraft pulp from Colombian hardwood mixtures. A.I.D. PASA No. AG/TAB-995-3-75, U.S. Forest Products Laboratory, A.I.D. Report No. 8.

15. Laundrie, J. F.
1977. Evaluation of NSSC and kraft pulps from different average density mixtures of Philippine hardwoods. A.I.D. PASA No. AG/TAB-995-3-75, U.S. Forest Products Laboratory, A.I.D. Report No. 12.

16. Laundrie, J. F.
1977. Properties of pulps, papers, paperboards, hardboards, and particleboards manufactured in or imported into the Philippines. A.I.D. PASA No. AG/TAB-995-3-75, U.S. Forest Products Laboratory, A.I.D. Report No. 13.

17. Laundrie, J. F.
1977. Some potential processing problems with mixed tropical hardwoods. A.I.D. PASA No. AG/TAB-995-3-75, U.S. Forest Products Laboratory, A.I.D. Report No. 16.

18. Laundrie, J. F.
1978. Kraft and neutral sulfite semichemical pulping of mixed tropical hardwoods. In Proceedings of Conference on Improved Utilization of Tropical Forests, p. 332-354.

19. Laundrie, J. F., and D. J. Fahey
1976. Newsprint from mixtures of Philippine hardwoods. A.I.D. PASA No. AG/TAB-995-3-75, U.S. Forest Products Laboratory, A.I.D. Report No. 2.

20. Laundrie, J. F., and D. J. Fahey
1977. Additional newsprint from a mixture of 24 lower density Philippine hardwoods. A.I.D. PASA No. AG/TAB-995-3-75, U.S. Forest Products Laboratory, Addendum to A.I.D. Report No. 2.

21. Laundrie, J. F., and D. J. Fahey
1976. Tablet papers from mixtures of Philippine hardwoods. A.I.D. PASA No. AG/TAB-995-3-75, U.S. Forest Products Laboratory, A.I.D. Report No. 3.

22. Laundrie, J. F., and D. J. Fahey
1976. Tissue and toweling papers from mixtures of Philippine hardwoods. A.I.D. PASA No. AG/TAB-995-3-75, U.S. Forest Products Laboratory, A.I.D. Report No. 4.

23. Laundrie, J. F., D. J. Fahey, and J. W. Koning, Jr.
1977. Corrugating medium from mixed tropical hardwood semi-chemical pulps. A.I.D. PASA No. AG/TAB-995-3-75, U.S. Forest Products Laboratory, A.I.D. Report No. 15.

24. Main Inc., Charles T.
1977. Preliminary industrial survey for tropical hardwoods utilization. Report submitted to U.S. Forest Products Laboratory under contract No. 12-226, dated March 9, 1977.

25. Myers, G. C.
1977. Hardboards from mixtures of Philippine hardwoods after chip storage. A.I.D. PASA No. AG/TAB-995-3-75, U.S. Forest Products Laboratory, Addendum to A.I.D. Report No. 5.

26. Myers, G. C.
1977. Hardboards from mixtures of Colombian and Ghanaian hardwoods. A.I.D. PASA No. AG/TAB-995-3-75, U.S. Forest Products Laboratory, A.I.D. Report No. 11.

27. Myers, G. C.
1978. Hardboards from mixed tropical hardwoods. In Proceedings of Conference on Improved Utilization of Tropical Forests, p. 387-396.

28. Myers, G. C., and D. J. Fahey
1976. Hardboards from mixtures of Philippine hardwoods. A.I.D. PASA No. AG/TAB-995-3-75, U.S. Forest Products Laboratory, A.I.D. Report No. 5.

29. Wahlgren, H. E., and J. F. Laundrie
1977. Properties of 50 individual Philippine hardwood barks and mixtures of 22 Ghanaian and 18 Colombian hardwood barks. A.I.D. PASA No. AG/TAB-995-3-75, U.S. Forest Products Laboratory, A.I.D. Report No. 10.

30. Zabe, R. N., and R. J. Albert
1978. Utilization of tropical hardwoods for manufacture of pulp, generation of steam, and electrical energy--a preliminary industrial survey. In Proceedings of Conference on Improved Utilization of Tropical Forests, p. 542-569.