Trends in U.S. Fertilizer Technology

IMPLICATIONS FOR GLOBAL TRANSFER

1977

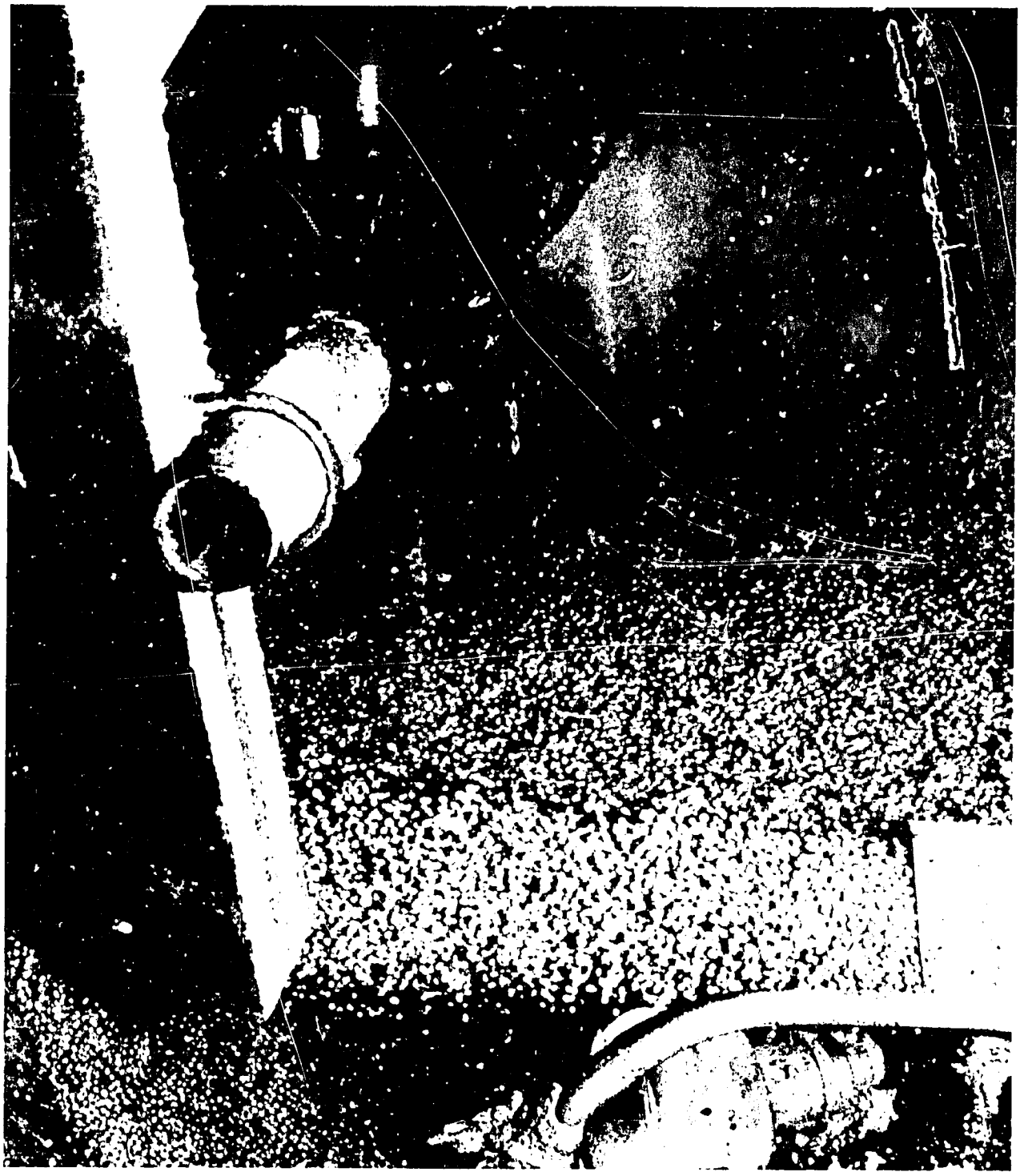

Foreword

The main purpose of this paper is to characterize U.S. fertilizer technology in the late 1970's. The industry has largely developed over the past century and has experienced major changes in recent years, particularly since about 1950.

Advances have brought about better and more economical products and more dependable and efficient processes. Granulation became the standard for improved products in the U.S. during the 1950's, about a decade later than in Europe. Bulk blending exploded to its dominant status in many areas of the U.S. a bit later. The fluid fertilizer industry showed substantial, steady growth in the 1960's. Efficient bulk handling, transport, and application systems are other hallmarks of the past 25 years. These and other factors led to growth of U.S. fertilizer consumption to about 51 million tons of materials by 1977.

There have been chaotic periods of high and distressed prices, changes in the export market, and major shakeups of ownership patterns. Through all of this, several companies with a long history in the industry, and some government organizations, have provided a steadying influence.

This review should be of interest to those with a background in fertilizer technology and perhaps even more so to those who interface with the industry in domestic and foreign programs. It is directed to a large extent to implications for the selection and transfer of appropriate technology, and associated information and experience, through programs of the U.S. Agency for International Development (USAID). The U.S. fertilizer industry has to a large extent changed with, and responded to, changes in the marketplace, in handling and transport systems, and in farming and fertilizer application practices. The world fertilizer industry has grown very rapidly during the past decade, particularly in the lesser industrialized countries of Asia, Latin America, and Africa. The position of several of these countries with respect to raw materials and energy resources, capital, and ocean transport provide excellent export potential.

The latest technology outlined here for large ammonia, urea, and phosphate plants—that was available to a number of countries from the start—and significant developments in ocean transport have pulled the world fertilizer industry closer together in the marketplace. The leveling of world production of main fertilizer intermediates and products, to avoid major areas of overproduction that could be disastrous because of huge capital outlays, may well be an overriding world industry problem during the 1980's.

Dealing effectively with the energy situation, and converting to the extent feasible to renewable energy resources and available raw materials are likely to be the greatest problems facing the U.S. fertilizer industry and that of other countries. Some practices of this type that are already used, and others under development, are outlined here. In summary, there are great challenges ahead. Many are of a different nature than faced in the past. History indicates that the human and material resources of this vital industry should equip it to meet them.

INTENTIONALLY
LEFT
BLANK

Contents

History of U.S. Fertilizer Industry 6
- Phosphatic Fertilizers 6
- Nitrogen Fertilizers 7
- Potassium Fertilizers 7
- Mixed Fertilizers 8
- Bulk Blending 8
- Recent Practices in NPK Granular Fertilizer Production 9
- Fluid Fertilizers 9

Important Changes or Innovations in the 1970's 10
- Granular Urea 10
- Powdered MAP 11
- Efficient Melt-Type Granulation Processes Using Simple Pipe Reactors 11
- Urea-Based Fertilizers 12
- Pipe-Reactor Process for High-Polyphosphate Liquid Fertilizers 13

Storage of Raw Materials, Intermediates, and Fertilizer Products 17
- Storage at Phosphate Fertilizer Production Complexes 17
- Storage at Nitrogen Fertilizer Production Complexes 19
- Storage and Handling at Local or Regional Finished Fertilizer Plants .. 21

Environmental Controls in Production, Transport, and Use of Fertilizers 23
- The Basic Phosphate Industry 23
- The Nitrogen Fertilizer Industry 25
- The Potash Industry 26
- Environmental Problems in Production of Finished Fertilizers 26
- Environmental Problems in Storage, Handling, Shipment, and Application of Fertilizers 29

The Energy Situation 30

Adoption of U.S. Fertilizer Technology in Other Countries 31
- Means for Dissemination of Technology to Other Countries 33

Future Innovations 33
- New Types of Products 33
- Sulfur-Coated Urea (SCU) 34
- Urea Phosphate and Other Phosphate Fertilizers 34
- Global Movement of Nitrogen Solutions 35
- Improvements in Bulk Movements 36
- Innovations in Production of Fertilizers in Solid Form 36

Some Possible Products, Practices, and Innovations in the Longer Term 38
- The Basic Phosphate Industry 38
- The Basic Nitrogen Industry 38

Summary of Probable Trends in U.S. Fertilizer Technology for the 1980's 39

References 43

Figures

Page

1. Flow Diagram of Granular Diammonium Phosphate Plant 6
2. Flowsheet-TVA Pan Granulation Process for Production of Granular Urea and Urea-Ammonium Sulfate . 8
3. Sketch of Pipe Reactor and Rotary Drum Granulator..... 12
4. TVA Pilot Plant Pipe-Cross Reactor . . 13
5. Liquid Fertilizer Plant Using Pipe-Reactor Process 14
6. Typical Plant for Production of Suspensions from Solids 15
7. Mechanical Bulk Unloader..... 18
8. Vane Type Seal for Bucket Elevator . . 19
9. Bulk-Blend Plant Equipped with Dust Control 20
10. Facilities for Producing Urea-Ammonium Nitrate Solution 21
11. PVC Lined Earthen Phosphoric Acid Storage Pit 22
12. Typical Bulk-Blending Plant 23
13. Highly Automated Blend Plant with Remote Operating Board 24
14. Concrete Mixer-Type Blender 24
15. Anti-Segregation Dividers for Holding Hopper..... 25
16. High Flotation Applicator, 17-Ton Capacity..... 25
17. Venturi Type Scrubber for Ordinary Superphosphate Plant..... 27
18. Bag Filter System of Typical Ammoniation-Granulation Plant . . . 28
19. Spraying Dust Depressant on Fertilizer Materials 29
20. Urea Phosphate System for Production of Liquid Fertilizers of High Quality 35

Trends in U.S. Fertilizer Technology

IMPLICATIONS FOR GLOBAL TRANSFER

The U.S. fertilizer industry is organized basically into separate segments for production and marketing of nitrogen, phosphate, or potash intermediates and products. There is some overlapping, but the large basic complexes produce predominately N, P, or K products. The finished NP or NPK fertilizers usually are prepared in small- or medium-sized plants near the markets. Ammonium phosphates, used widely for bulk blending and to some extent for direct application, are mainly produced near the phosphate rock mines.

Nitrogen fertilizer production complexes are located near natural gas sources. Many ammonia plants are sited at wellheads; others are located on natural gas pipelines. Nearness to markets is another important consideration, as are transportation alternatives. Locations on waterways facilitate domestic shipments by low-cost barge and export via ocean-going vessels.

Large amounts of ammonia are shipped by rail and truck, with the latter being used primarily for short hauls. Substantial quantities of ammonia move by pipeline from plants in gas-producing areas to major fertilizer markets in the North Central and Midwestern States. Recent innovation is the shipment of ammonia in refrigerated barges; upon arrival, the liquid ammonia often is stored at atmospheric pressure in insulated and refrigerated tanks.

Ammonia often is dissolved in water to make nitrogen solutions, which are nonpressure materials. The solutions are shipped by truck, rail, barge, and pipeline. Other major sources of nitrogen are prilled or granular ammonium nitrate and urea. Urea is shipped by truck, rail, or barge. Much of that moved by barge is stored in bulk in conventional river terminals. Ammonium nitrate, because of the dangers associated with it, usually moves by rail or truck.

The major U.S. phosphate production centers are located near the phosphate rock mines in Florida, North Carolina, and western areas of Idaho, Utah, and Wyoming. Elemental phosphorus for use in production of industrial products is produced near the phosphate mines in Tennessee and in the West. There is a substantial economic advantage for upgrading phosphate rock (28%-32% P_2O_5) to wet-process acid (52%-54% P_2O_5), TSP (44%-46% P_2O_5), DAP (18-46-0), and MAP (11-52-0) for long-distance shipment to regional or local plants that produce finished granular or fluid fertilizers. Major phosphate fertilizer complexes in Florida and North Carolina are favorably located for export of phosphate rock, wet-process acid, TSP, and DAP. Recently there has been some interest in the production and use of ordinary superphosphate (OSP) as a source of both P_2O_5 and S (20% P_2O_5 and 11% S) in spot locations. This intermediate is usually produced from byproduct or spent sulfuric acid and phosphate rock. Production usually is in regional plants close to the marketing area. Total U.S. production of OSP was about 340,000 metric tons in 1977.

Most of the potash used in the United States was mined near Carlsbad, New Mexico, until the early 1960's, when the deposits in Saskatchewan, Canada, came into production. In 1977 the Canadian mines supplied more than 70% of the potash consumed in the United States. Major U.S. potash corporations built mining and processing operations there, but several of these have been taken over by the Government of Saskatchewan. The high analysis (61% K_2O) and good physical properties of Canadian potash make long-distance shipment feasible to plants that manufacture the finished fertilizers.

Most finished fertilizers in the United States are processed in regional or local plants comparatively near the markets. Production and marketing techniques for the three main systems—granulation, bulk blending, and fluid fertilizer production—are described later.

Most finished fertilizers in Europe, Asia, and Latin America are produced at major production complexes, located mainly to facilitate receipt of raw materials and shipment of products to the markets. Locations that allow shipment by water are highly preferred. Major raw materials and intermediates—such as phosphate rock,

phosphoric acid, and ammonia—often are shipped to these complexes from domestic or outside sources.

History of U.S. Fertilizer Industry

Phosphatic Fertilizers

The first manufactured fertilizer in the United States was ordinary superphosphate (18%-20% P_2O_5), first produced in about 1870. Phosphate rock mined in South Carolina was used in the earliest production. The Charleston, South Carolina, area had seven plants by 1874. Later, the main phosphate mining shifted to central Florida; the first commercial shipment from Florida was made in 1880.

Triple superphosphate production started in the Baltimore, Maryland, area about 1930. However, there was no major production until the Tennessee Valley Authority (TVA) introduced concentrated superphosphate on a broad-scale as its first fertilizer for demonstration and market development for the industry in 1934. It was made by reaction of phosphate rock with electric-furnace phosphoric acid. Economics of this high-analysis fertilizer (48% P_2O_5) for long-distance shipment led to the construction of several large phosphatic fertilizer complexes in Florida and the western phosphate fields in the 1950's. A large complex built at the site of a major phosphate deposit on the North Carolina coast came into production in 1966. These plants manufacture the more economical wet-process acid and use it to acidulate phosphate rock that is mined, beneficiated, and pulverized at the site. The grade of the TSP is from 44% to 46% P_2O_5. Several companies use the simple TVA cone mixer process to produce run-of-pile TSP which in turn is shipped to NPK granulation plants. Some companies use a tank reactor-slurry process, with either a pugmill or rotary drum granulator for production of granular TSP.

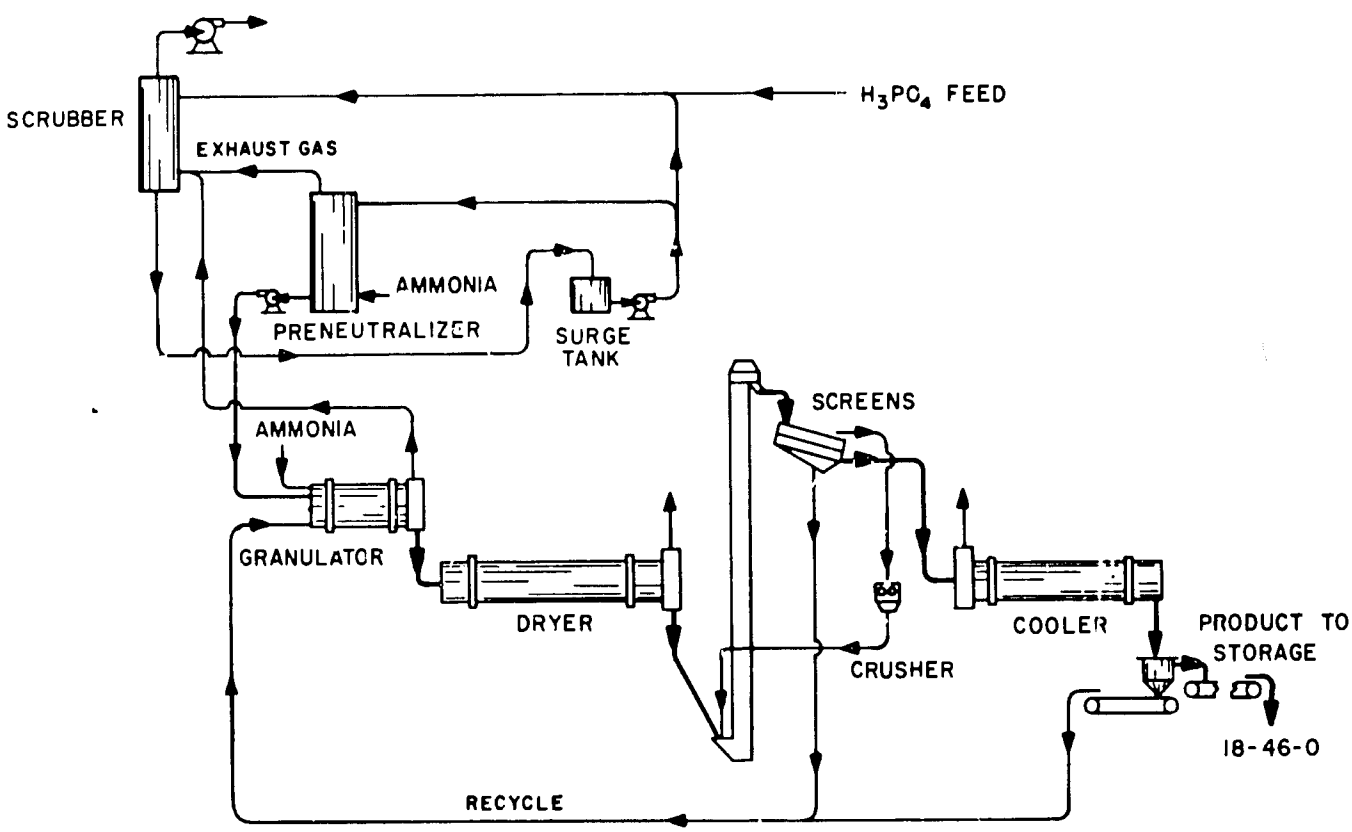

Figure 1. Flow diagram of granular diammonium phosphate plant

In 1959-60, TVA developed a dependable and comparatively economical process for production of granular diammonium phosphate (DAP) and an adaption for monoammonium phosphate (MAP). This process was adopted rapidly by the phosphate industry in Florida, North Carolina, and the Western States area (1). A flow digram for a very popular TVA process is shown in figure 1. Ammonium phosphates became the leading phosphatic fertilizer in the United States in 1971 (2). Recently TVA has developed melt-type processes for the production of ammonium phosphate sulfates, MAP, and DAP (3).

Wet-process phosphoric acid (52%-54% P_2O_5) was a major commodity in the trade by the early 1960's. Superphosphoric acid (68%-70% P_2O_5), developed by TVA for use in manufacturing of liquid fertilizers, was a commercial product by the late 1960's. A complex in Mexico made the first major ocean shipments of merchant grade wet-process acid about 1970. More than 7 million tons of P_2O_5 as phosphoric acid was produced in the United States in 1977 (4). About one-fourth of this acid is shipped to regional plants within this country for use in production of fluid and granular fertilizer. There is a definite trend to increased domestic shipments of the acid by railway tank cars. Regional granulation plants have found it economically advantageous to replace TSP with phosphoric acid.

Several processes were developed in the early 1970's for production of powdered MAP in simple, low-cost equipment. This intermediate is being used as a major component in production of granular fertilizers in several countries (5). Some powdered MAP is being shipped in ocean trade. There is now one major U.S. producer of this material, which in the U.S. is used primarily to produce granular and suspension fertilizer mixtures. Use of solid intermediates, such as nongranular MAP and granular ammonium phosphates, in preparation of suspensions in local plants is increasing rapidly in the late 1970's.

Nitrogen Fertilizers

The first nitrogen fertilizers used in the United States were imported natural sodium nitrates from Chile. Later, ammonium sulfate (20% N) became available as a byproduct from the coke and steel industries. In 1918 a plant complex for production of synthetic ammonium nitrate by the Cyanamide process was built at Muscle Shoals, Alabama. The ammonium nitrate was for use in munitions for World War I. TVA was established and took over these idle facilities in 1933. However, ammonium nitrate was not produced by TVA until 1943, when a modern ammonia plant using the Haber-Bosch process was put in operation as one of three wartime (World War II) plants in the United States (6).

Starting in 1944, TVA demonstrated the use of ammonium nitrate as a fertilizer on a broad scale and developed a market for the U.S. industry. Ammonium nitrate later became the leading nitrogen fertilizer in the United States; however, ammonia is now (1977) the most popular nitrogen fertilizer (4.0 MM tons N). Direct application of ammonia was demonstrated in the early 1940's in Mississippi, but it was not until the 1960's that this economical practice became widespread (7). Nonpressure nitrogen solutions that contain both ammonium nitrate and urea were developed in the 1950's. They are now (1977) the second most popular form of nitrogen fertilizer (1.7 million tons N).

Growth in solid urea production has been slow in the United States and Europe as compared with other parts of the world. U.S. production of urea as solid fertilizer was 0.83 million tons of N and that of ammonium nitrate was 1.04 million tons of N in 1977. Older plants produce prills, whereas most urea plants built in the United States since the mid-1970's produce a more desirable granular urea (8). The granular urea can be readily produced to desired particle size; crushing strength is three to five times higher than for prills, making it more durable in handling and transport. A flow diagram of the TVA pan granulation process for urea is shown in figure 2.

Potassium Fertilizers

Potash was first mined and refined in New Mexico in 1931. This area was the major supplier of potash for the United States until after 1960, when the huge deposits in Saskatchewan, Canada, were developed. Since 1973, Canada has supplied more than 70% of the

KCl for the United States. New Mexico is still the only source of langebeinite (18% Mg, 21% K_2O and 22% S) for the United States. In the past few years two U.S. companies have produced and supplied potassium sulfate by the solar evaporation of brine in the Great Salt Lake of Utah, and one company in new Mexico produces it from langebeinite. About 90% of the K_2O used in the United States is KCl and the remainder is mainly K_2SO_4.

Mixed Fertilizers

The earliest mixed fertilizers in the United States were based on waste materials from the meat processing industry. In 1913 about 42% of the nitrogen in U.S. fertilizers was supplied by these wastes; in 1977 the proportion was less than 1%. The first mineral mixed fertilizers were in powdered form and caked badly. The practice of ammoniating superphosphate during production of these fertilizers became popular in the 1930's. Analysis was low--such as 6-8-4 and 2-10-7 (N-P_2O_5-K_2O). The practice of producing fertilizers in granular form, that was already popular in Europe, did not develop to any appreciable extent in the United States until the dependable and comparatively simple TVA ammoniation-granulation process was developed and demonstrated in 1952. Within a year about 50 plants were using the process; the total in the United States reached 200 by 1958. Such plants developed rapidly, particularly in the North Central and Midwestern States, as fertilizer demand in those areas grew rapidly. OSP often was produced at regional granulation plants; other intermediates—including TSP, potassium chloride, ammonium sulfate, ammonia, and nitrogen solutions—were shipped in. Secondary nutrients (S and Mg) and micronutrients (Zn, Cu, B, Mo, Fe, etc.) were added when needed (9, 10).

Bulk Blending

The practice of physically blending fertilizer intermediates without chemical reaction started in Illinois in 1947. Growth of bulk blending was slow, reaching only 200 units in the U.S. by the mid-1950's. The real explosion came in the 1960's. The number of

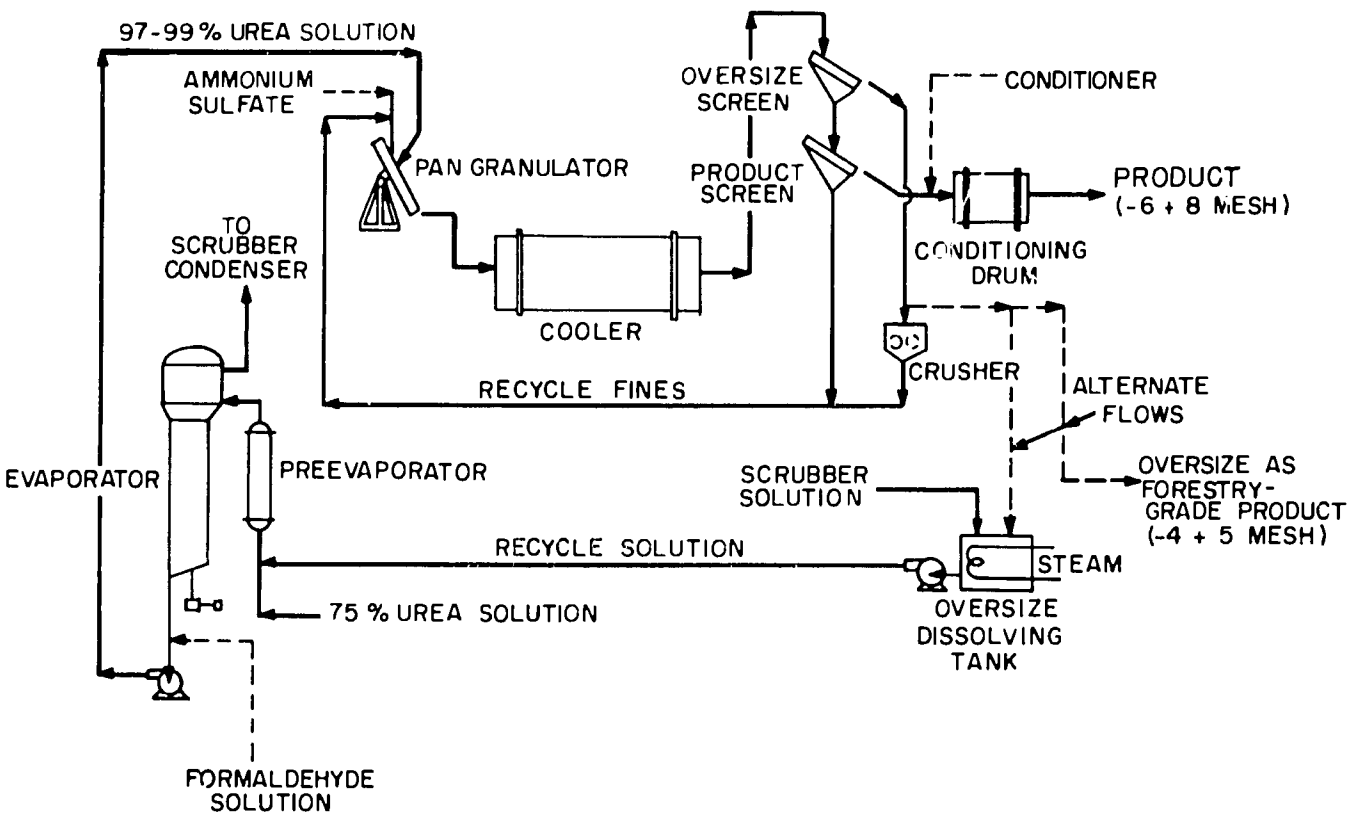

Figure 2. Flowsheet—TVA pan granulation process for production of granular urea and urea-ammonium sulfate

bulk blending plants reached 1,700 by 1964 and nearly doubled to 3,100 by 1966. In 1976 around 5,600 bulk-blending units produced about 10.7 million tons of products (11).

Key factors in the rapid growth of bulk blending were convenience in providing a variety of plant food ratios or grades (or prescription amounts of N, P, and K), economy due to handling in bulk, and services provided by the blender. The blender is the retail dealer in the bulk-blending marketing system, and he usually transports the fertilizer to the farms and applies it when needed. Typical blending plants produce and market only 2,000-6,000 tons per year on a seasonal basis. There are a few plants with much larger annual production. Investment in blending units is comparatively low ($200,000 or less), but most blenders have about equal investment in application equipment (12,13). The typical blender is equipped with high-speed application equipment that has high flotation tires. Usually, spinner type applicators are used. Considerable care is required during handling and application to prevent segregation of ingredients which results in nonuniform application of the blend (14). Nonuniform application of blends has been especially troublesome when herbicides are sprayed onto and applied with the blends. Usually, some nonuniform weed kill occurs in the field and because of these problems there has been less tendency for blends to increase in popularity during recent years. New types of application and handling equipment, plus improved operating procedures, may help to eliminate these problems.

Recent Practices in NPK Granular Fertilizer Production

For several years, local granulation plants in the United States that produce granular NP and NPK fertilizers have been handling and transporting these fertilizers in bulk to attain one of the main advantages of bulk blending. In some situations, these fertilizers are transported directly to the farm in application vehicles, or in vehicles designed to fill application equipment at the farm. Some large operators have consolidated production at larger, more economical plants and ship products to local distribution points. One firm produces about 1 million tons of NPK homogeneous mixtures which are handled and shipped mainly in bulk. River transport of large quantities is particularly economical.

There has been a steady increase in domestic shipment and use of phosphoric acid in ammoniation-granulation plants. The use of this acid along with spent sulfuric acid has substantially improved the economics of production in some local plants.

A few large volume grades may be produced economically at the granulation plants and blended to other grades or ratios at the distribution points to provide flexibility. There are no appreciable problems with segregation in handling and shipping the NP and NPK basic grades and the blends prepared this way have less tendency to segregate than usual blends. Tests also have shown that blends prepared in this manner can be applied uniformly with main types of application equipment.

Fluid Fertilizers

Growth of fluid fertilizer production has been impressive in the United States. It is estimated that about 4 million tons of liquid mixtures were consumed in the United States in 1976. About 30% of the total fertilizer consumed in 1976 was in the fluid form (includes anhydrous ammonia). Fluids supplied about 59% of the total nitrogen and 11.2% of the total P_2O_5. A 1976 survey shows there are now 3,300 fluid fertilizer mix plants in the United States (15).

TVA pioneered the development of liquid and suspension fertilizers. Development of polyphosphate liquid intermediates (11-33-0 and later 11-37-0), in the early 1960's by TVA, led to clear liquid grades of higher analysis with good storage properties. The polyphosphates sequester (hold in solution) the plant food elements and impurity contents for extended periods of storage. The base liquids were shipped to local plants and used to produce NPK grades such as 8-8-8, 8-16-8, and 7-21-7 (16). In 1971 TVA developed a very simple process for production of high-polyphosphate liquids. A simple pipe reactor is used in which ammonia reacts with superphosphoric acid of low (25%) polyphosphate content almost instantaneously. The heat of reaction drives off the water and forms a polyphosphate melt that is processed to 10-34-0 or 11-37-0 liquids of high quality with about 75% of the P_2O_5 as

polyphosphate. This high level of polyphosphate allows production of stable liquid grades of high analysis. TVA listed 120 plants using this process in 1977. Investment for these plants is quite low (17, 18). The polyphosphate liquid is shipped to local plants for use in preparation of finished NPK liquid grades.

TVA also developed and demonstrated suspension fertilizers which have substantial portions of small crystalline plant nutrients suspended in the fluid. About 2% of gelling clay is used as a suspending agent. Suspensions allow production of high-analysis grades which have an average analysis that is about twice the concentration found in clear liquid grades and close to the concentration found in most granular NPK mixtures. They also provide a means of suspending some secondary nutrients and micronutrients so that they can be uniformly applied. Probably the most important reason for the increased popularity of fluid mixtures and nonpressure nitrogen solutions is their use as carriers of herbicides. A popular practice is to add the herbicides and pesticides with nitrogen solutions. Experience has shown this is a way to accomplish uniform weed and pest kill. It also helps avoid soil compaction, because one pass across the field is eliminated.

An orthophosphate suspension (13-38-0) was developed by TVA in the mid-1970's and is being used in demonstration programs in industry plants. A companion urea-ammonium nitrate (UAN) suspension with N content of 30% or 31% was developed by TVA and introduced to industry in 1977. TVA has also introduced various granular products such as ammonium polyphosphates of 15-62-0 and 11-55-0 grades which have been used to produce clear liquids and suspensions. Some companies recently started using granular or powdered MAP to produce suspensions; others use granular DAP.

The dominant features of the fluid production and marketing system are the simplicity of mixing facilities and the ease of handling. Also, fluid fertilizers can be applied uniformly and at high speeds. It is not unusual for a fluid fertilizer to be applied at rates greater than an acre per minute with standard high flotation-type equipment. As farm mechanization increased, fluids became more popular.

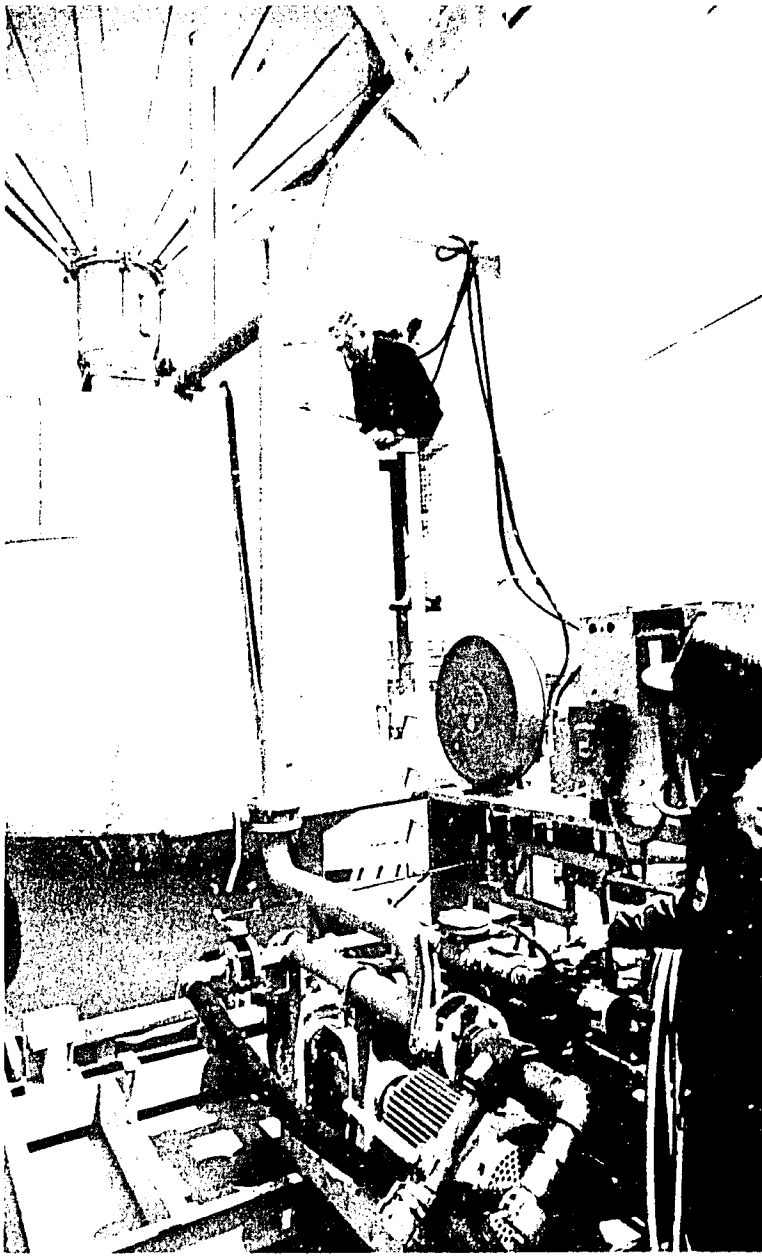

A hot-mix type liquid fertilizer plant.

Important Changes or Innovations in the 1970's

Granular Urea

Three processes for production of granular urea of high quality were made available to the U.S. and world industry in the early 1970's. These are the Cominco—C. & I. Girdler and TVA processes in the United States, and the Norsk Hydro process in Europe. The Cominco—C. & I. Girdler process is a Spherodizing operation (8), while the TVA and Norsk Hydro processes use an inclined pan granulator. There has been considerably more interest in granular urea in the United States than in other parts of the

world, because the granular product can be easily produced to match the particle size of other intermediates such as granular DAP, TSP, and KCl which are widely used in bulk blending.

Another advantage of granular urea—its much greater crushing strength as compared with that of prilled urea—should ultimately cause the granular product to be preferred throughout the world. Its four to five times greater hardness will be a distinct advantage for shipment and handling in bulk. As USAID bulk shipments of urea develop, this factor will be very significant. A third major advantage of the granulation processes over prilling is the much smaller volume of air handled. This greatly facilitates and decreases cost of confinement and collection of fumes and dust. This factor alone will tend to favor granulation processes for new urea plants in the future. Investment for a granulation plant is estimated to be slightly higher than for one using prilling. If equipment were installed to remove fume and particles from the much higher volume of air through a prilling tower, the investment likely would be about the same.

Powdered MAP

As mentioned briefly in an earlier section, processes for relatively simple production of powdered MAP were developed in England, Scotland, Spain, United States, Japan, and Israel in the early 1970's. The nongranular MAP is used mainly as an intermediate in formulations for granular NP and NPK fertilizers. The moisture content (4%-8%), although the material appears dry, and the ready capacity to react with considerable additional ammonia cause this intermediate to be quite effective. Its physical properties are good, and few serious problems have been encountered in land or water shipment. Large quantities are being moved by coastal barges and ships around Spain (5). The Fisons "Minifos" process (England) got the jump on others and is being used in 25 or more plants. Steady growth should be expected.

Efficient Melt-Type Granulation Processes Using Simple Pipe Reactors

An efficient melt-type granulation process utilizing a simple pipe reactor was developed in pilot-plant studies by TVA and was described at an international meeting in 1970 (19). A demonstration plant for this process (16-18 tons per hour) was put in operation by TVA in 1973 and has been operating very satisfactorily for more than three years (20). Anhydrous ammonia and partially neutralized merchant grade wet-process acid (54% P_2O_5) are fed to the two branches of a 6-inch pipe tee. They react rapidly in the 10-foot section of a 6-inch pipe following the tee. The pipe-reactor unit is made of 316L stainless steel. The free water and some combined water are driven off by the heat of reaction to form an essentially anhydrous melt. The melt flows to a pugmill where it is granulated with recycle to produce an 11-55-0 (or 12-54-0) grade. Urea melt is added when desired to produce urea-ammonium phosphate grades of 28-28-0 and 35-17-0. About 20%-25% of the P_2O_5 in the melt is polyphosphate. No drying step is required, and storage properties are good for 11-55-0 with about 1.5% moisture and for 28-28-0 and 35-17-0 with about 0.8% moisture without use of a conditioner. Potash has been added in pilot-plant work to produce a 19-19-19 grade.

A later version of the pipe reactor called the pipe-cross allows simultaneous feeding of phosphoric and sulfuric acids to opposing branches of the pipe-cross. The sulfuric acid provides nutrient sulfur as ammonium sulfate in the products and essentially eliminates a troublesome ammonium chloride fume caused by reaction of H_2SO_4, KCl, and NH_3 in the ammoniator-granulator drum. It also tends to decrease formation of scale in the pipe. The pipe-cross unit provides a simple means for utilizing large quantities of byproduct sulfuric acid and low cost ammonia. Some grades produced with the pipe-cross unit include 12-48-0-4S, 11-52-0, 13-13-13, and 8-24-24 (21).

By mid-1977 10 commercial plants had either installed or purchased a new reactor. Those that have used the pipe-cross reactor have reported production rates as high as 30 tons per hour of most grades with comparatively low recycle rates. Most importantly, they report in most instances that no fuel is required to dry the product. At least six pipe reactors are being used in other countries. Most pipe reactors of both types are used in a system in which they discharge melt into a TVA-type rotary drum ammoniator-granulator. The rotary drum system is more

Industry representatives observe operation of pipe reactor in TVA's granular fertilizer pilot plant.

versatile than other granulators, since additional ammonia can be fed efficiently during granulation. A diagram of the pipe reactor and rotary drum granulator is shown in figure 3 and that for the pipe-cross unit is shown in figure 4.

The pipe reactor and pipe-cross reactor units have several very important advantages. These include elimination of a costly dryer system that eliminates fuel for that operation and decreases electrical energy requirements. A savings of about 25% can be realized in the investment for a new plant as compared with conventional NPK and granular ammonium phosphate plants. Pollution control is greatly facilitated by elimination of the drying step which is a major source of fumes and dust (22).

The high-analysis grades that can be produced, the economics of production, and the better bulk and bagged handling and storage properties of melt-granulated products likely will result in use of these fertilizers in USAID programs in the future.

Urea-Based Fertilizers

As just discussed, the pipe-reactor system developed by TVA allows efficient and economical production of the high analysis urea-ammonium phosphate (UAP) fertilizers such as 28-28-0, 35-17-0, 19-19-19, and 24-12-12. As of 1977 there was no appreciable commercial production of urea-based NP or NPK fertilizers in the United States. TVA introduced UAP fertilizers in demonstration

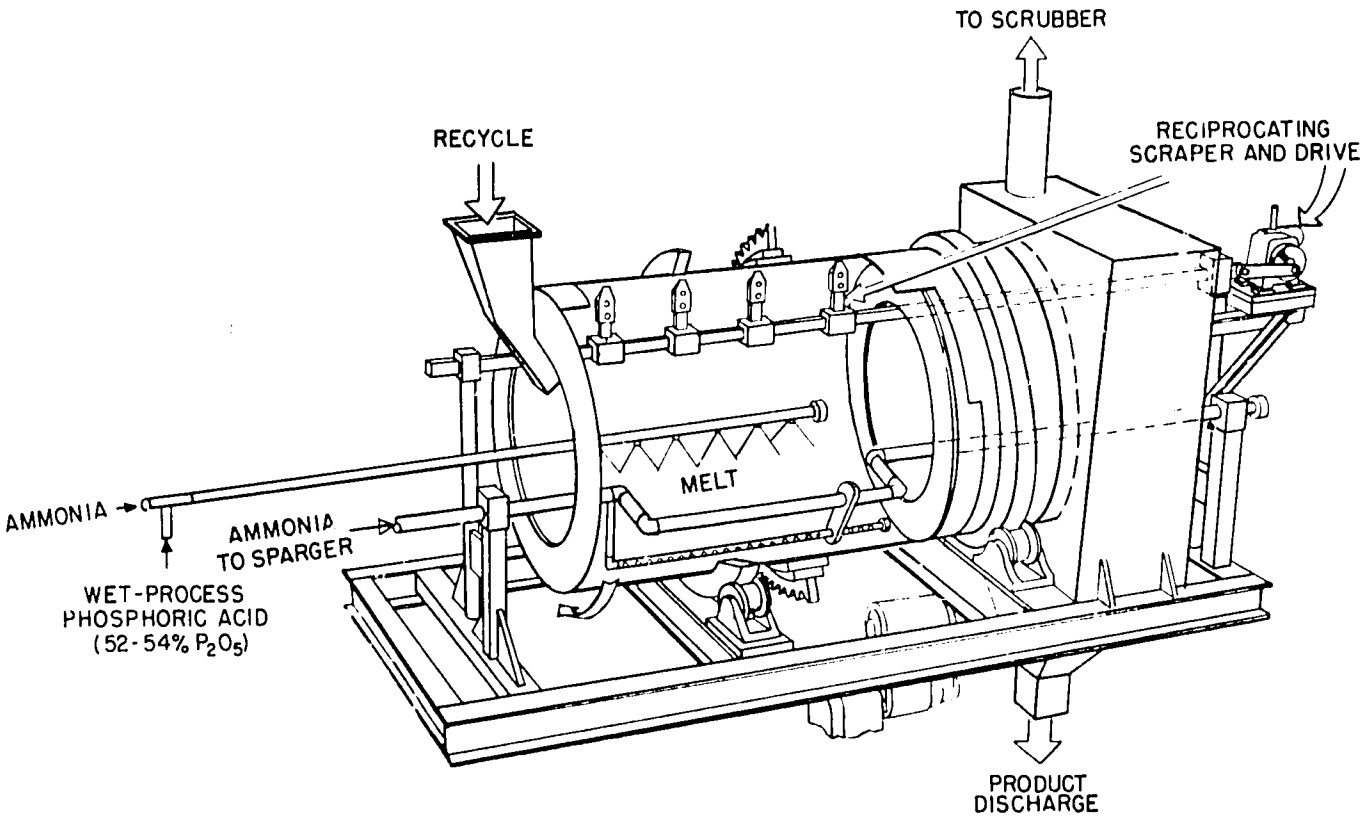

Figure 3. Sketch of pipe reactor and rotary drum granulator

and market development programs for the industry in 1973. The urea-ammonium phosphates, 28-28-0 and 35-17-0, have been popular in the TVA market development programs for use in bulk blends and fluid fertilizers. The particle size distribution is satisfactory for blending with popular materials such as DAP and potash. The urea-ammonium phosphates also have proven to be excellent intermediates for the production of higher analysis liquids and suspensions (23). It is likely that production by the industry will develop in future years and will provide products for USAID seeding programs. There is substantial production of UAP products in India, Japan, and Spain. Activity and planning are underway in other countries.

Pipe-Reactor Process for High-Polyphosphate Liquid Fertilizers

After rapid development in pilot-plant studies, TVA introduced a simple pipe-reactor system for production of high-polyphosphate liquid fertilizers in 1971. Broad and intense interest by the U.S. liquid fertilizer industry developed quickly, and 120 commercial units of this type were documented in 1977. The pipe reactor is about the same as that used in melt-granulation as described previously. However, wet-process superphosphoric acid (68%-70% P_2O_5) of low polyphosphate content (20%-35%) is used, and the absence of free water to be evaporated results in a much higher temperature of 650°-700°F (340°-370°C). At this temperature, additional polyphosphate is rapidly formed so that 75%-80% of the P_2O_5 in the melt is polyphosphate.

A typical commercial plant which uses the pipe reactor is shown in figure 5. The mix tank is usually about 5 to 6 feet in diameter and 6 to 12 feet high. The inverted "U" type pipe reactor used in this system is made of stainless steel. It usually has an overall length of about 20 feet. Most reactors are made of 4-inch standard pipe and tee section.

Superphosphoric acid is fed through one arm and gaseous ammonia through the other. Melt from the reactor is discharged into the mix tank where it is quenched with recirculating 10-34-0 product and reacted with additional ammonia so that the pH of the product is in the range of 5.8 to 6.2. Exit gases from the mix tank are scrubbed with cooled product and the water needed in the process. The temperature of the liquid in the mix tank is kept at 180°-200°F (82°-93°C) by regulating the quantity of cooled product returned to

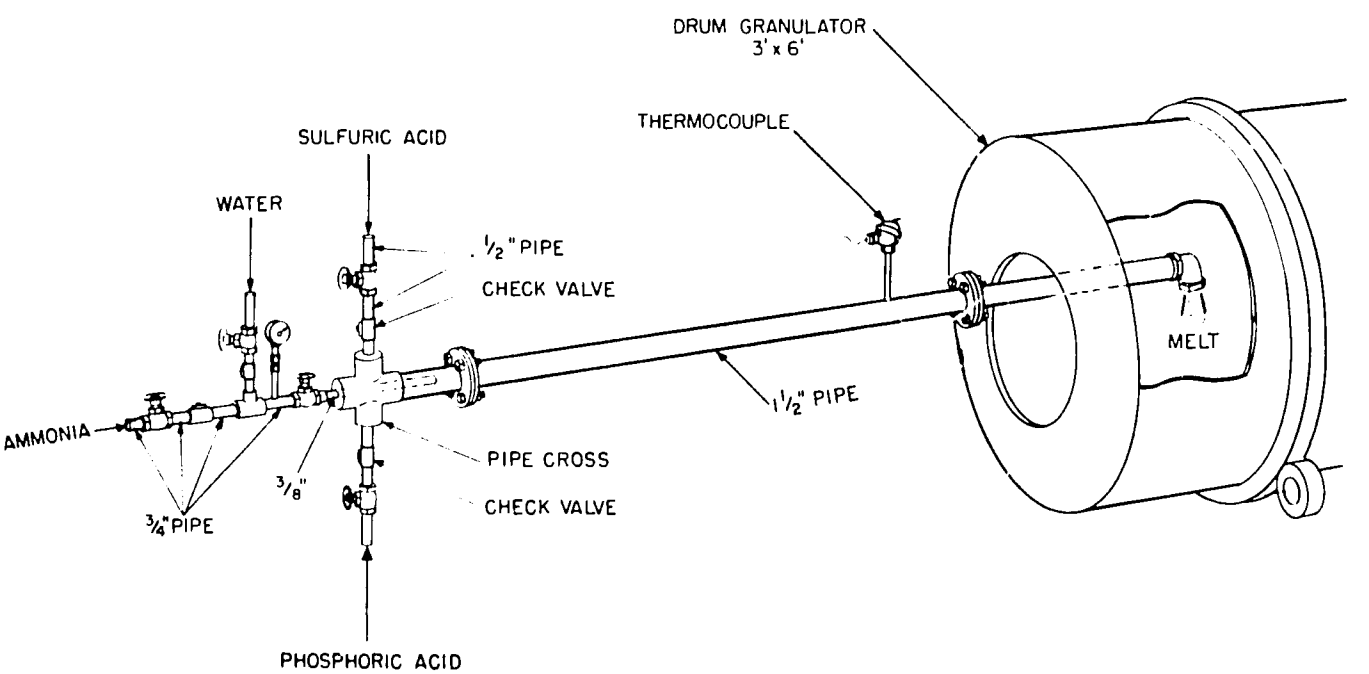

Figure 4. TVA pilot plant pipe-cross reactor

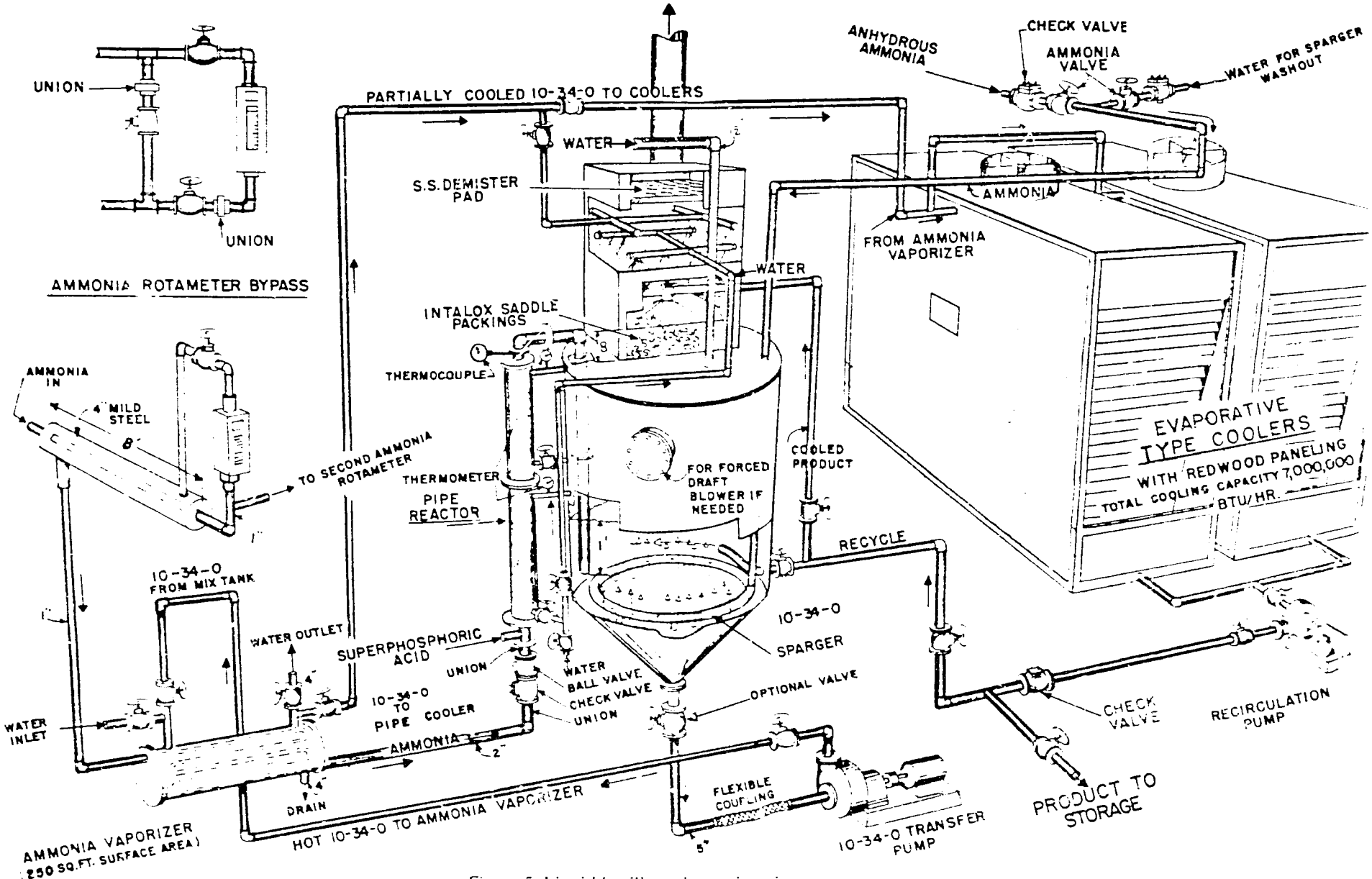

Figure 5. Liquid fertilizer plant using pipe-reactor process

the mix tank. Essentially, no hydrolysis of the polyphosphates in the liquids occurs because of the short retention time in the mix tank. The hot liquid is an excellent source of heat to vaporize the liquid ammonia used in the process, thereby conserving energy.

After the liquid is partially cooled in the vaporizer, it is finally cooled in a conventional evaporative-type cooler that is often mounted above the mix tank. Product from the cooler is either returned to the mix tank or pumped to storage. The high polyphosphate content of the liquids greatly facilitates sequestration of Fe, Al, and Mg impurities: and these liquids and NPK finished liquid products have good storage properties for extended periods.

In the past, most suspensions have been produced from liquids such as 11-37-0 and 10-34-0. Suspensions now are widely produced from merchant grade wet-process phosphoric acid (54% P_2O_5) and/or solid materials such as 18-46-0, 11-52-0, and 11-55-0. A typical local mix plant for preparation of suspensions from solid materials and ammonia is shown in figure 6. The main features of the plant are the large recirculating pump and the high intensity mixer. Many plants of this type have annual production greater than 30,000 tons of NPK suspensions—such as 11-33-0, 20-10-10, and 7-21-21—and their hourly production rate is about 20 tons per hour. Cost studies show that suspensions made from solid materials can be produced as economically as bulk blends of comparable grades.

It has been estimated that between 1 and 2 million tons of suspension mixtures (NPK) were produced in 1976. Suspension fertilizers are popular because of:

- Relatively high analysis—about twice that of clear liquid fertilizers.
- Ease of handling when compared to solid mixed fertilizers.
- Convenience of incorporating micronutrients, pesticides, and herbicides.

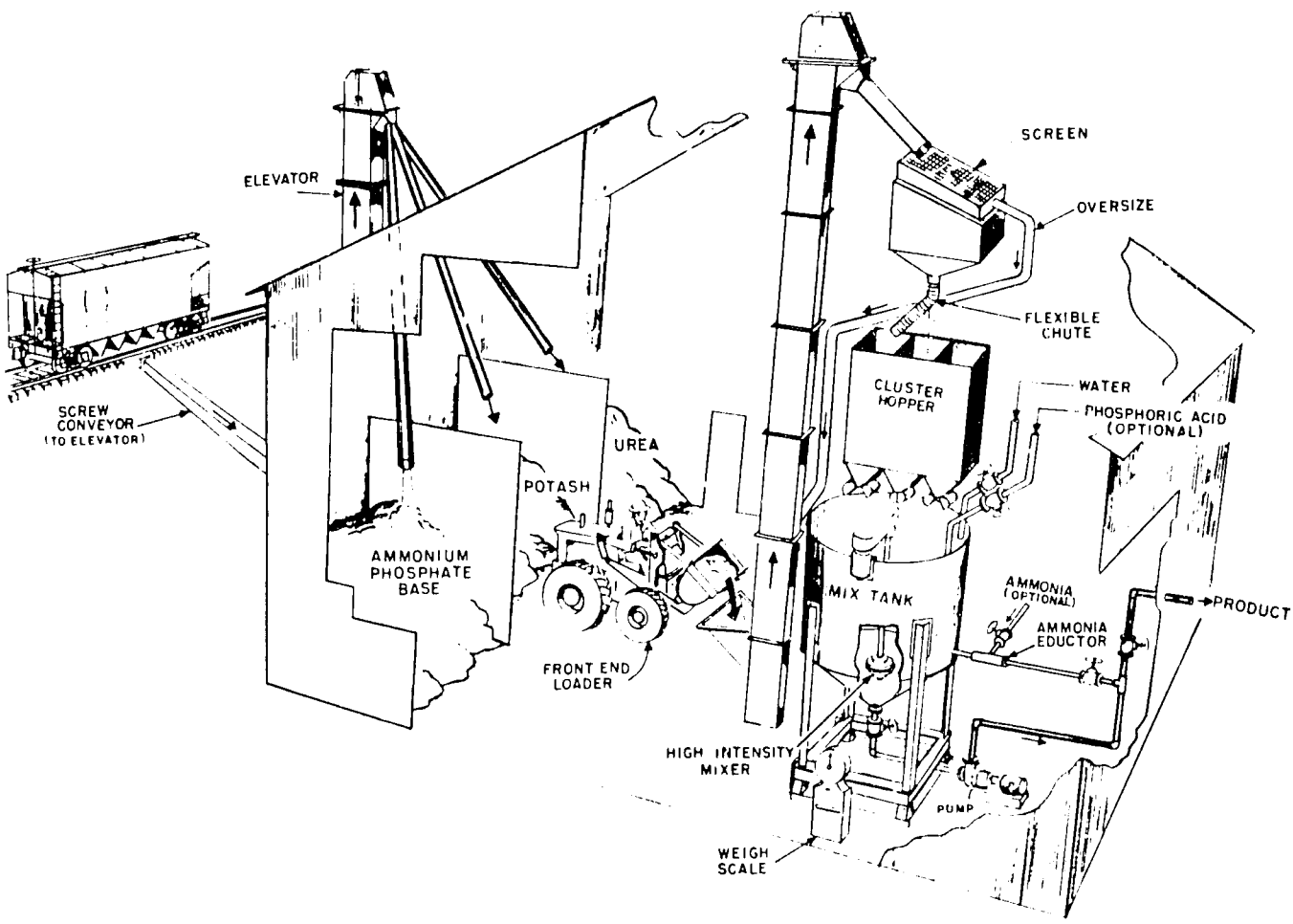

Figure 6. Typical plant for production of suspensions from solids

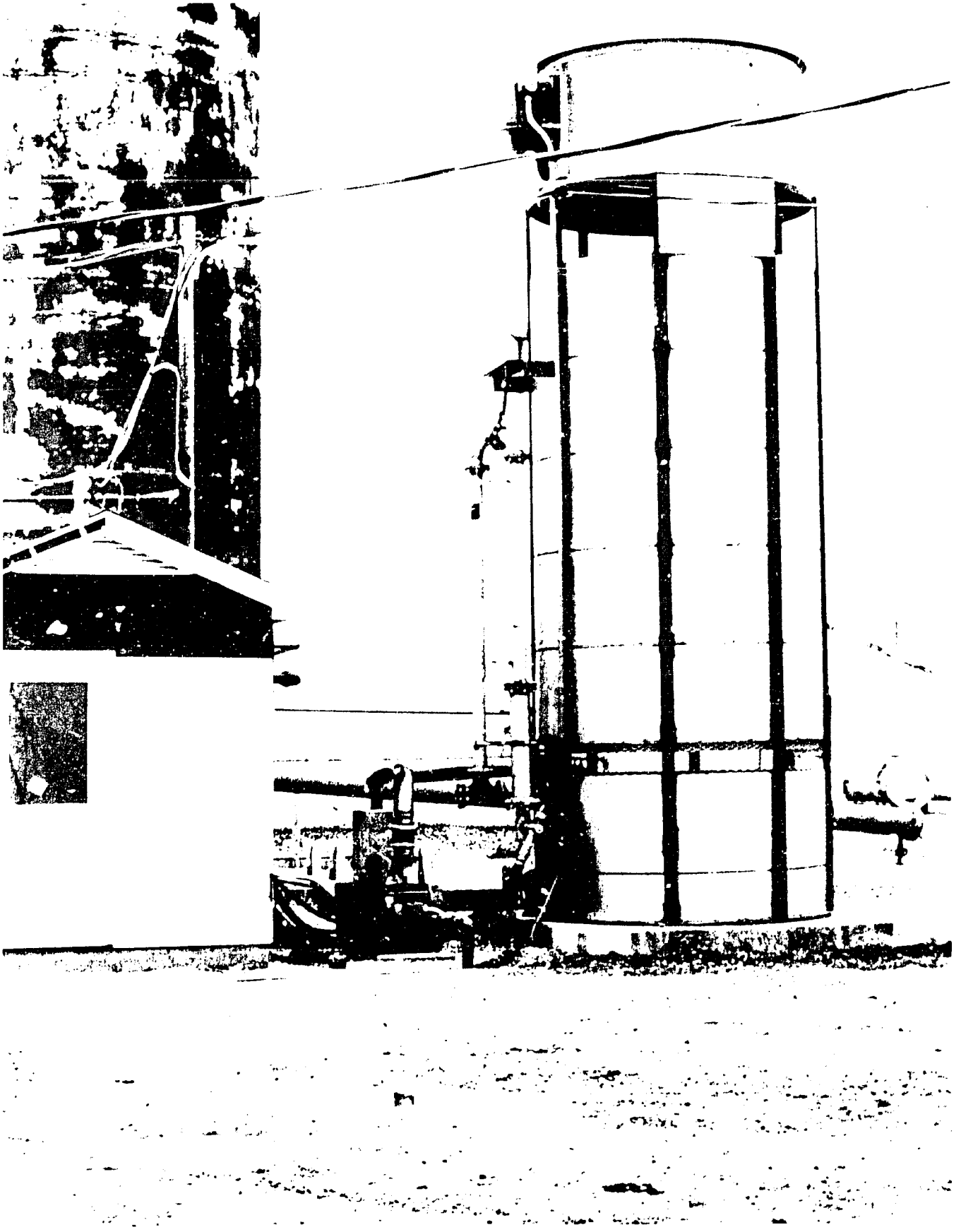

Commercial liquid fertilizer plant using the TVA pipe reactor process for production of high polyphosphate liquids.

- Fewer problems with air and stream pollution from fluid fertilizer plants as compared with granular mixed fertilizer plants.

The main fluid fertilizer activity is in the United States, but there is substantial production in France and a few plants in Canada, Mexico, Belgium, Brazil, the Soviet Union, South Africa, and the United Kingdom. The pipe-reactor process for liquids of high quality, and the more economical suspensions, likely will lead to greater importance of liquids in the world. The very good storage properties of 10-34-0 or 11-37-0 intermediates for extended periods may result in significant shipment in world trade in the future. The good handling and storage properties of low-polyphosphate acid, as will be discussed later, probably will result in it being shipped more in world trade as an intermediate for use in liquid and granular fertilizers.

Storage of Raw Materials, Intermediates, and Fertilizer Products

A substantial part of the investment in facilities at fertilizer production plants is for storage of solids and liquids. Most raw materials, intermediates, and finished products must be stored with protection from the weather. There have been some improvements in design of storage buildings for solid materials that allow utilization of a larger percentage of the volume. Also, mechanical systems for removal of solids from storage have been improved. These are more efficient and require less manpower. Although the cost of conventional tank storage for either corrosive or noncorrosive liquids has increased, there have been some lower cost innovations that are practical in local plants where only modest storage volume is required.

Storage at Phosphate Fertilizer Production Complexes

At phosphate fertilizer production complexes, dry storage must be provided for the TSP, DAP, and MAP produced. Total capacity usually ranges from 60,000 to 100,000 tons. Most storage buildings utilize a shuttle belt system for in-loading. In the United States the most common system for out-loading uses front-end loaders of high capacity, discharging with only a ort pivot onto a high-capacity belt that conveys the materials to bagging or bulk loading.

European plants and some in Asia and South America use mechanical out-loading systems referred to as bridge scrapers. This comparatively expensive equipment of German and French design allows fuller use of storage space and provides higher capacity for out-loading. One popular design is an open drag conveyor starting as an inverted V spanning the pile. It moves on a track on each side from one end of the building to the other. Material is scraped to outgoing conveyor belts on both sides of the building. As material is moved out, the hinged conveyor flattens and conforms to shape of the pile until a full vertical cut to the floor has been made. Larger units handle 80-150 tons per hour. Other similar units have single drag arms that can be moved to various areas of the pile. Units of the bridge scraper design are most practical when only one or two materials or grades are stored in the building. One of the major problems in bulk storage buildings is dust control (24). Most fertilizer materials are stored in bulk—usually in bins having concrete floors and wooden walls. Materials commonly are removed from the bulk storage piles with front-end loaders and are conveyed to a bucket elevator where they are unloaded into a bagging machine hopper, transport truck, railway car, or a farmer's applicator. A considerable amount of dust is created during the handling of the material in the front-end loader at the boot of the elevator—also at the discharge chute of the elevator.

One company in Sweden has minimized dust by installing the unique bulk unloader shown in figure 7. The unloader is completely mechanical; it removes material from the top of the pile by a drag conveyor that takes the material to a belt conveyor which discharges into a sealed elevator. This system is quite expensive but is completely dust-free. Probably a more economical way to minimize dust is to treat the material with a dust suppressant and install seals in the boot of the unloading elevator as shown in figure 8. Some companies have installed flexible rubber or canvas sleeves on the discharge chute of the

elevator so the material can be discharged directly onto the pile, thus avoiding a fall between the end of the chute and the equipment.

Baghouse collectors (fabric filters), shown in figure 9, are being used in some plants for effective collection of dust in dry form. Dry recovery systems permit the collected dust to be reused in the fertilizer process. Figure 9 also shows how curtains are installed around railway cars to confine the dust when the cars are being unloaded. The use of these devices decreases the load of dust-laden air on the baghouse filter. A baghouse for 10,000 cfm airflow is adequate for a 50-ton-per-hour bulk handling facility.

The main types of bag collectors are the mechanical shaker- and air-pulse types. In the shaker-type filter, dust is removed from the bags by periodically shaking them automatically. The air-pulse-type baghouse has several compartments with a series of bags in each. The bags are cleaned by periodically separating one compartment from the normal exhaust airflow system and injecting a high pressure air impulse in the reverse direction to the normal flow of exhaust gas. Preheating of the bag collector, keeping the system warm during short shutdown periods, and good insulation are essential features for collection of hygroscopic fertilizer dust with either system.

High-capacity storage is required at major phosphate fertilizer production complexes for wet-process phosphoric acid. Aside from surge storage of in-process acid, separate major storage for 52%-54% P_2O_5 acid from the concentrator is required. In some plants, the

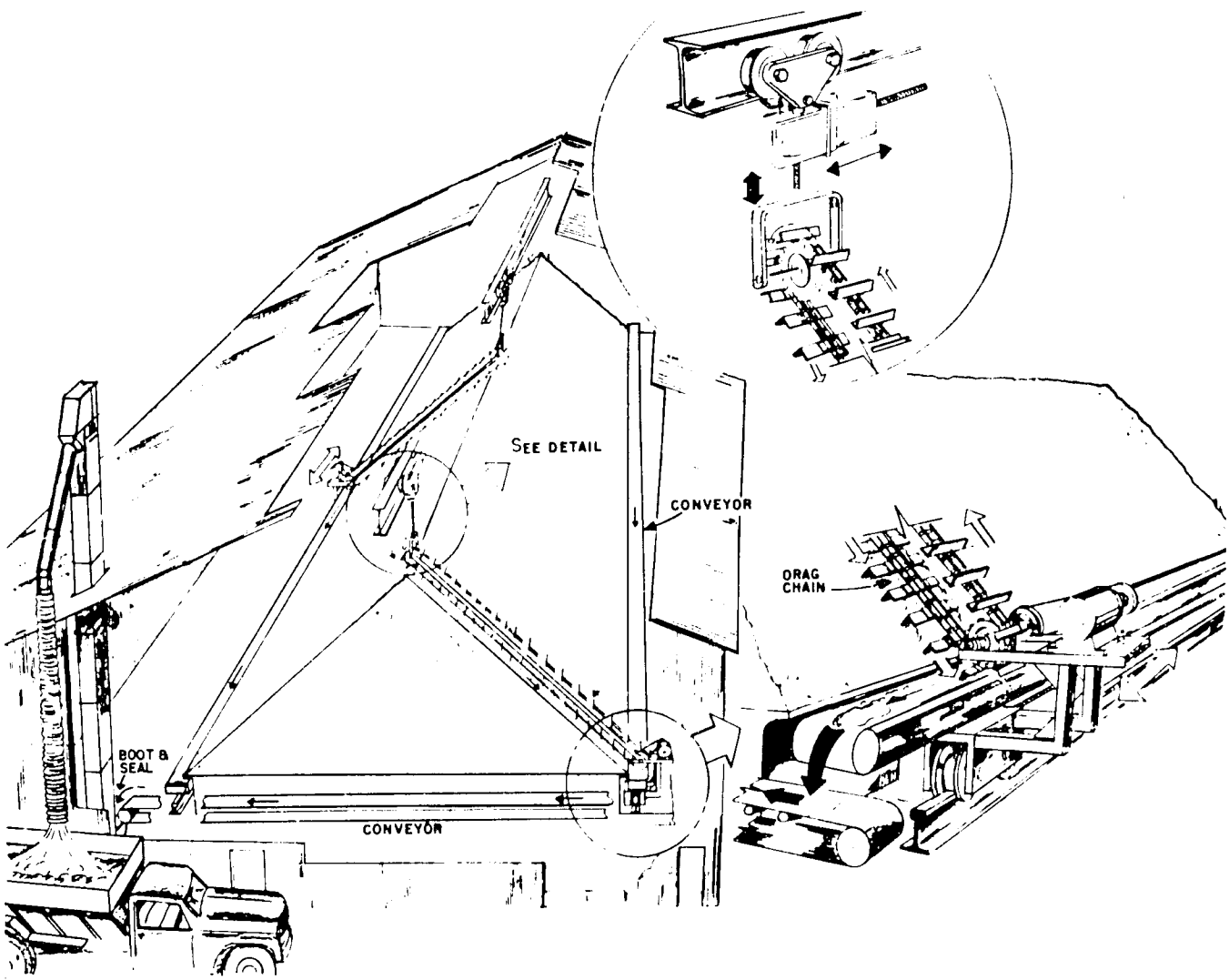

Figure 7. Mechanical bulk unloader

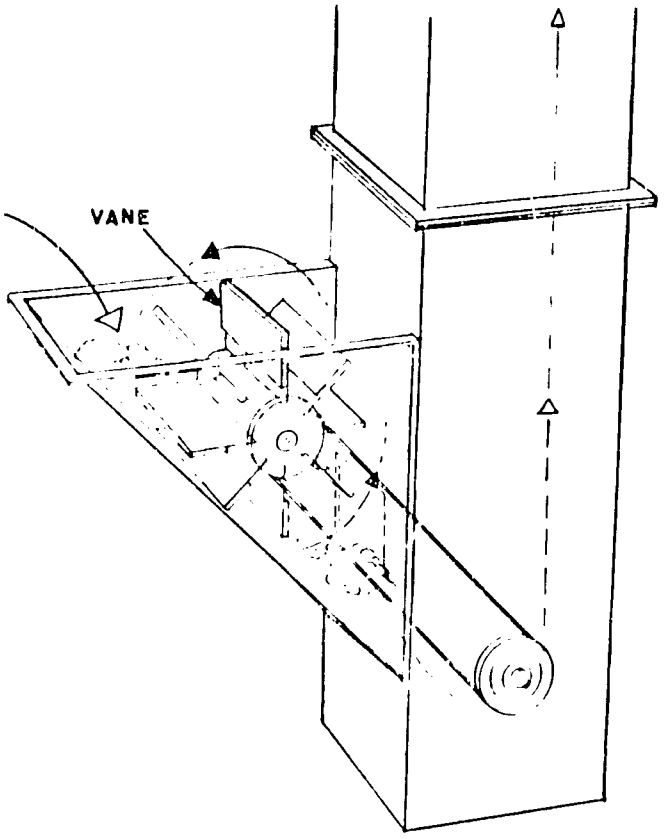

Figure 8. Vane type seal for bucket elevator

acid is allowed to settle out sludge and the cleaner acid for shipment is removed from the top of large tanks. The other acid with higher solids content is used at the site for production of TSP, DAP, and MAP. Several major producers concentrate part of their acid further to superphosphoric acid (68%-70% P_2O_5) as discussed previously.

The usual acid strength for use in the pipe reactor contains about 68%-70% P_2O_5, and about 20%-35% of the acid is polyphosphoric acid. This acid has good storage and handling properties. Usually no heating of the acid is required at the point of use to ensure easy pumping. This feature of the low-conversion acid (69% P_2O_5; specific gravity 2.0) has opened up the practicality of ocean shipment and economy of about 50% higher payload as compared with merchant grade acid (54% P_2O_5; specific gravity 1.7). Cost of production of low-conversion superphosphoric acid is lower than for acid with about 50% of the P_2O_5 as polyphosphate. This results because only a single stage concentrator is needed and fuel requirement is lower (25).

The most widely used construction for wet-process acid storage tanks is rubber-lined mild steel. In recent years somewhat lower cost applied coatings of fiberglass-reinforced polyester (FRP), that are less expensive than rubber linings, have been used. A few producers use more expensive stainless steel. Pipelines for handling wet-process acid usually are made of FRP or high-density polyethylene (HPE). The HPE pipe is available up to 10-inch size and is not damaged by the ultraviolet rays of sunlight. Type 316 stainless steel or rubber-lined steel is usually used for pumps.

Storage tanks and pumps at shipping and receiving ports for wet-process acid use the materials described above. Saddle-type stainless steel tanks are used in ships for transporting wet-process acid, and a means for warming the acid is provided when superphosphoric acid is shipped. Rubber-lined mild steel compartments with higher utilization of space are planned in future ships for transport of wet-process phosphoric acid. Three new ships of 25,000- to 30,000-ton capacity went into service in 1976-77 to transport wet-process acid from North Africa and South Africa to Europe and South America, further proving the practicality of global movement.

Storage at Nitrogen Fertilizer Production Complexes

The main solid nitrogen fertilizer products are urea, ammonium nitrate, and ammonium sulfate. Procedures for reporting total world production of nitrogen fertilizer products have not been fully developed; however, estimates indicate that urea passed ammonium nitrate in world production in 1975 to become the leading solid nitrogen fertilizer. The U.S. production of these materials as solids for fertilizer use in 1977 was:

	Million Metric Tons of N
Ammonium nitrate	1.04
Urea	0.83
Ammonium sulfate	0.44

Substantial additional tonnages of ammonium nitrate and urea were used in fertilizer solutions. Ammonium nitrate and urea are produced in prilled and granular forms, and both are included in nitrogen solutions. Ammonium sulfate usually is a byproduct with small crystal size. Large crystals and

compacted granules are available for use in bulk blending. Advantages of granular urea and ammonium nitrate that result in preference for use of granulation systems in new plants were discussed previously. Since these nitrogen fertilizers are completely soluble and absorb moisture readily, they must be protected from moisture. Controlled humidity in storage buildings at production points is highly desirable. This is accomplished by use of air-conditioning or moderate heating in tightly sealed storage buildings. Bulk-storage piles for nitrogen fertilizers in users' plants can be protected satisfactorily by simply covering them with plastic sheets. Silo storage for ammonium nitrate and urea is provided along railway lines.

Nitrogen solutions of the pressure and nonpressure types are used widely in the United States. They are shipped by rail and truck. The producer or wholesaler often provides tank storage of liquid nitrogen fertilizer at users' plants. The most popular liquid nitrogen fertilizer is UAN, a physical mixture of urea and ammonium nitrate solutions that has an N content of 28%, 30%, or 32% and no significant vapor pressure. This solution is being produced and used increasingly in other countries because of simplicity of preparation, as shown in figure 10 for the TVA system, and its good storage and handling properties. UAN solution likely will find more of a place in world trade in the future.

In 1977 more than 400,000 tons of UAN solution (30% N) were imported by the United States from Europe. A number of liquid commodity terminals store imported UAN seasonally. The highly seasonal market

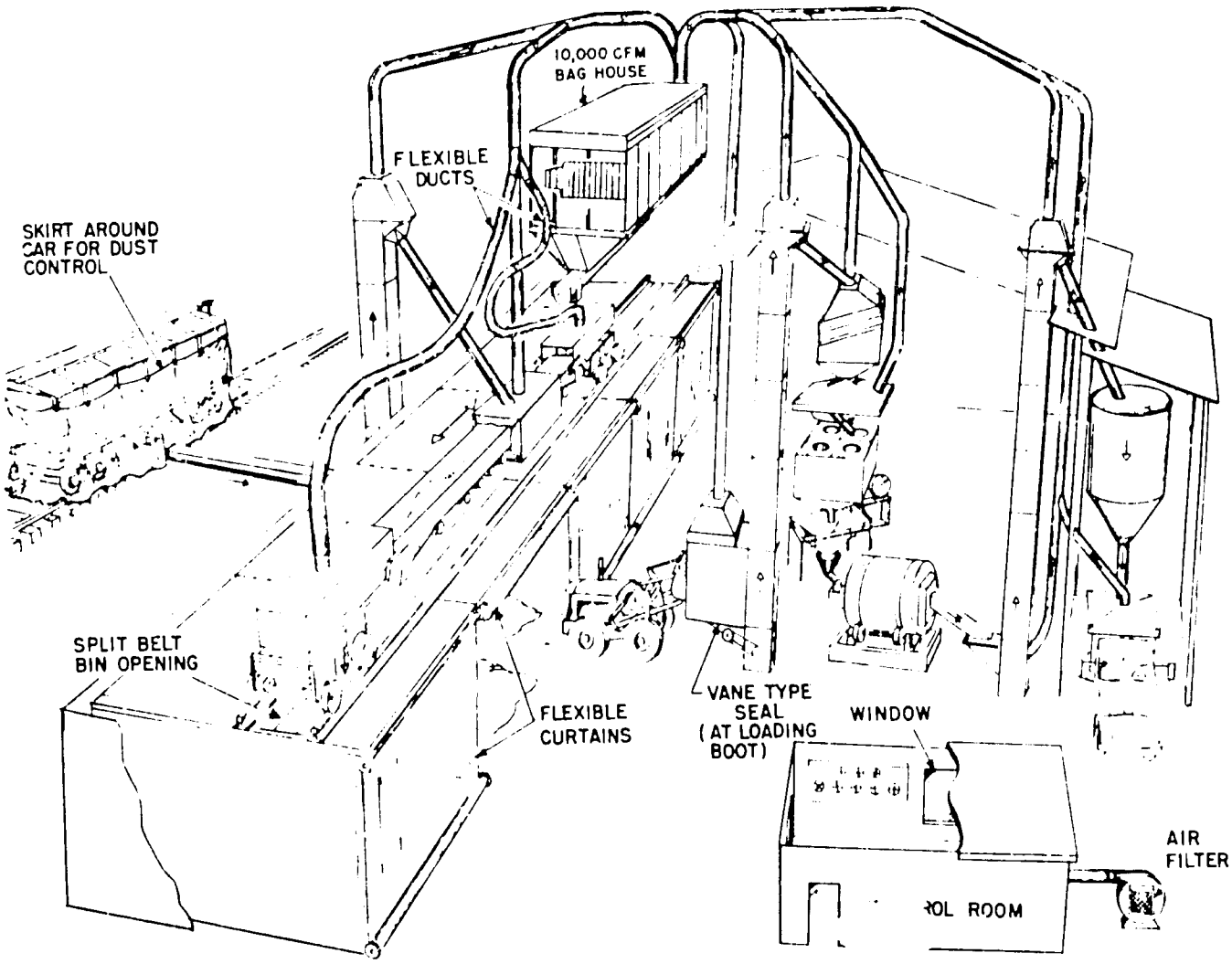

Figure 9. Bulk-blend plant equipped with dust control

for UAN causes problems for U.S. producers in providing adequate production and storage to meet demand. Pressure solutions that contain ammonia are used mainly as ammoniating solutions in local granulation plants, and probably will not become important in world trade.

Storage and Handling at Local or Regional Finished Fertilizer Plants

Local NPK granulation plants provide indoor crib-type (bookcase) storage for raw materials including superphosphates, ammonium phosphates, ammonium sulfate, and potassium chloride. These materials are moved by front-end loaders to an elevator that discharges to the solids feed system (see section—Present Operation of NPK Granulation Plants). Bulk and bagged storage for finished granular fertilizers of 20,000-40,000 tons total capacity usually is provided. Plants using wet-process phosphoric acid usually store the acid in rubber-lined mild steel tanks. Some fluid fertilizer plants store considerable quantities of wet-process acid and use rubber-lined steel or plastic type materials of construction.

In the past 10 years a number of economical pit-type storage containers have been built for phosphoric acid as shown in figure 11. Usually one end has a depth of 6 feet and the other 8 feet. All four walls of the pit are sloped at an angle of 45° or less so that no stress is applied to the liner as fluid is added. It is important to provide a drainage device as shown in figure 11 so that if a rupture occurs the acid will drain into a sump from which it can be recirculated until the pit can be emptied and the liner repaired.

It is common practice to cover the pits with an A-frame type of wooden roof covered with a standard composition roofing material or with an additional PVC liner which floats on top of the fluid. The estimated installation cost (1975) of pit storage for phosphoric acid was about $34 per ton of P_2O_5 (26).

Bulk-blending plants usually provide indoor storage for 1,000 to 1,500 tons of several granular fertilizers used. Materials used in blends are usually removed from storage by front-end loaders and are weighed in a hopper scale. A sketch of a blend plant with equipment at ground level is shown in figure 12. Some installations have an automated system so that the unit may be operated from the office as shown in figure 13. When the formula is to be repeated several times, a punched card can be inserted into the operating board and the materials are weighed automatically. In the automated plant of the future, it is visualized that an office employee will simply insert the NPK requirements in the computer, and the computer will calculate the least-cost formulation and operate the mixer.

In most new bulk-blending facilities the capacity of the mixer is at least 5 tons and some are as large as 10 tons. Usually the 5-ton mixer can produce blends at a rate of 50 tons per hour. The concrete-type mixer shown in figure 14 is most frequently used in new installations. One way to improve the efficiency

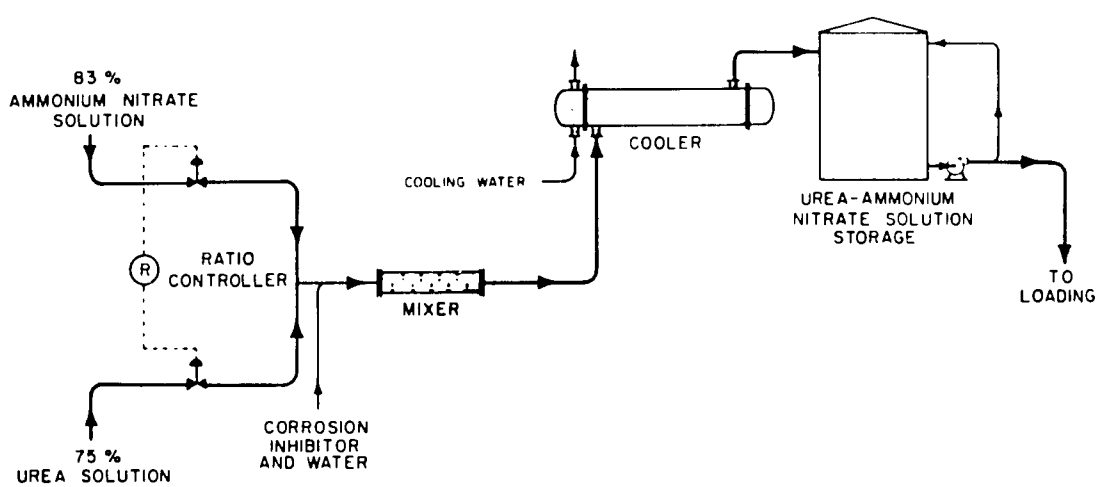

Figure 10. Facilities for producing urea-ammonium nitrate solution

of this type of mixer is to cut slots or holes in the discharge flights.

Another popular type of mixer is the conventional rotary mixer that is loaded on one end and unloaded on the other by inserting a discharge chute into the drum. Materials are lifted into the discharge chute by the lifting flights at the discharge end. Usually more time is required to empty this mixer than the concrete mixer unit. This type has one of the better mixing efficiencies. In most bulk-blend plants the mixer discharges into a cone-bottom retaining hopper and the blends tend to segregate by particle size. For several years TVA has recommended that dividing partitions be installed in the retaining hopper as shown in figure 15 to minimize coning; this has proved to be quite effective (27).

Probably the most dramatic change in fertilizer application equipment has been the use of high-flotation, high-capacity applicators. Figure 16 shows an applicator for granular fertilizers with a capacity of 17 tons. It has conventional dual spinners that cover a swath of about 40 to 50 feet. These applicators have applied fertilizers at a rate greater than one acre per minute. Because of the large tire surface this applicator exerts only low pressure on the soil and therefore causes little or no compaction even when the soil is wet.

A large blending plant in England that produces more than 50,000 tons per year is located at portside and receives all components for blending by ship. The versatile 1-ton capacity Mini-Bulk woven polypropylene bags are used to store the blends indoors or outdoors, at the plant and on the farm. This allows greater flexibility in storing a variety of grades and allows operation of the blending unit 10 months of the year to attain high annual capacity (28).

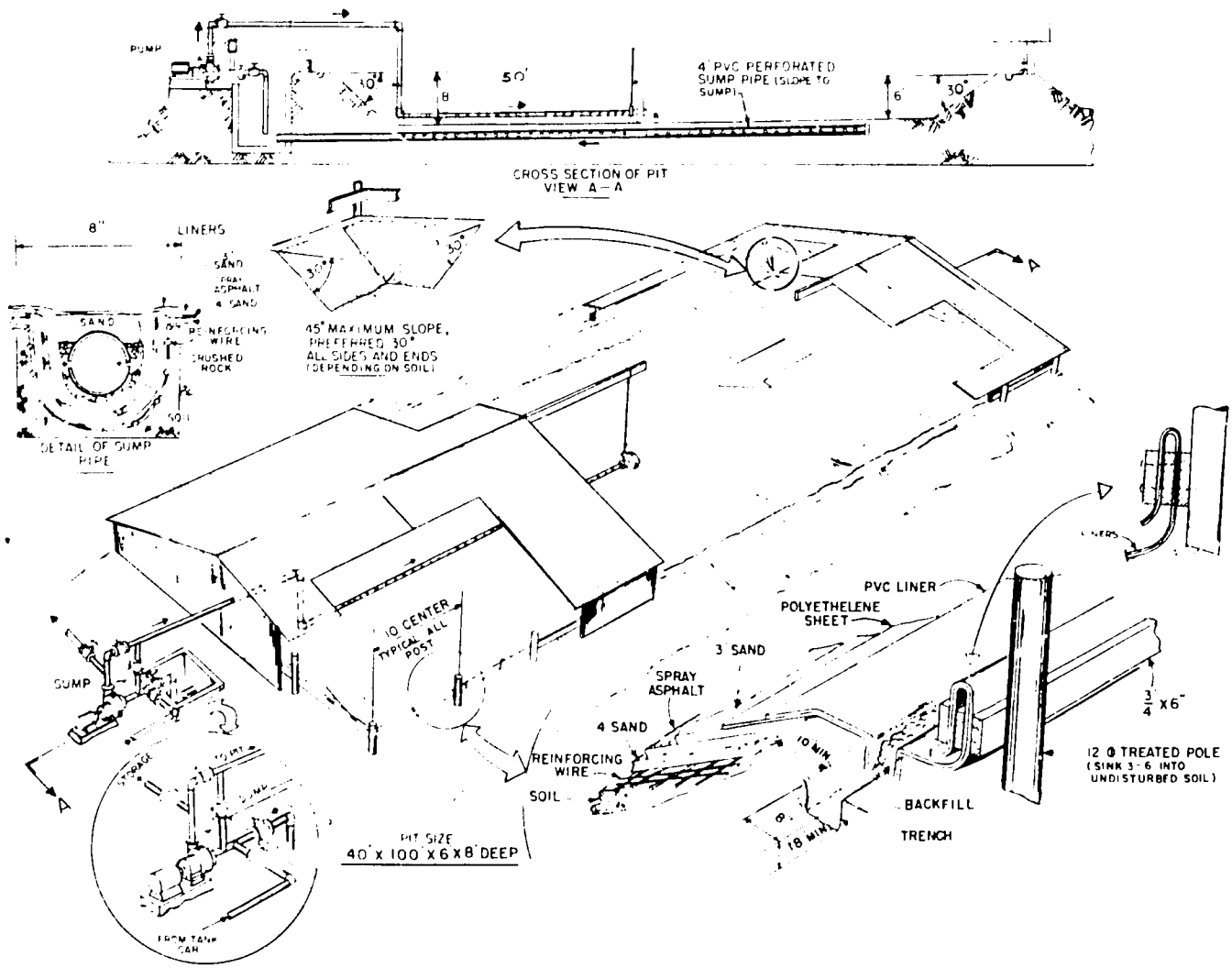

Figure 11. PVC lined earthen phosphoric acid storage pit

Environmental Controls in Production, Transport, and Use of Fertilizers

Since the late 1960's, all facets of the U.S. fertilizer industry have been more aware of the need for improved environmental controls. A large part of the efforts to deal with problems effectively has been due to controls initiated by State and Federal governments. Coordinating agencies for the U.S. industry—including The Fertilizer Institute (TFI), The Sulphur Institute, the Phosphate and Potash Institute, and the National Fertilizer Solutions Association (NFSA)—have assisted greatly in these efforts. On the whole, industry has cooperated quite well.

The Basic Phosphate Industry

Environmental problems go all the way back to the source of materials necessary for the industry. The problems in adequate control of dust and noise during mining of phosphate rock, maintenance and control of slimes and tailings ponds, and restoration of mined-out areas are for the most part being dealt with effectively. There have been some serious incidents though, that caused problems for both the industry and regulatory agencies.

As mentioned earlier, the basic phosphate industry of the United States is centered in north and south central Florida, North Carolina, in the western fields of Idaho, Utah,

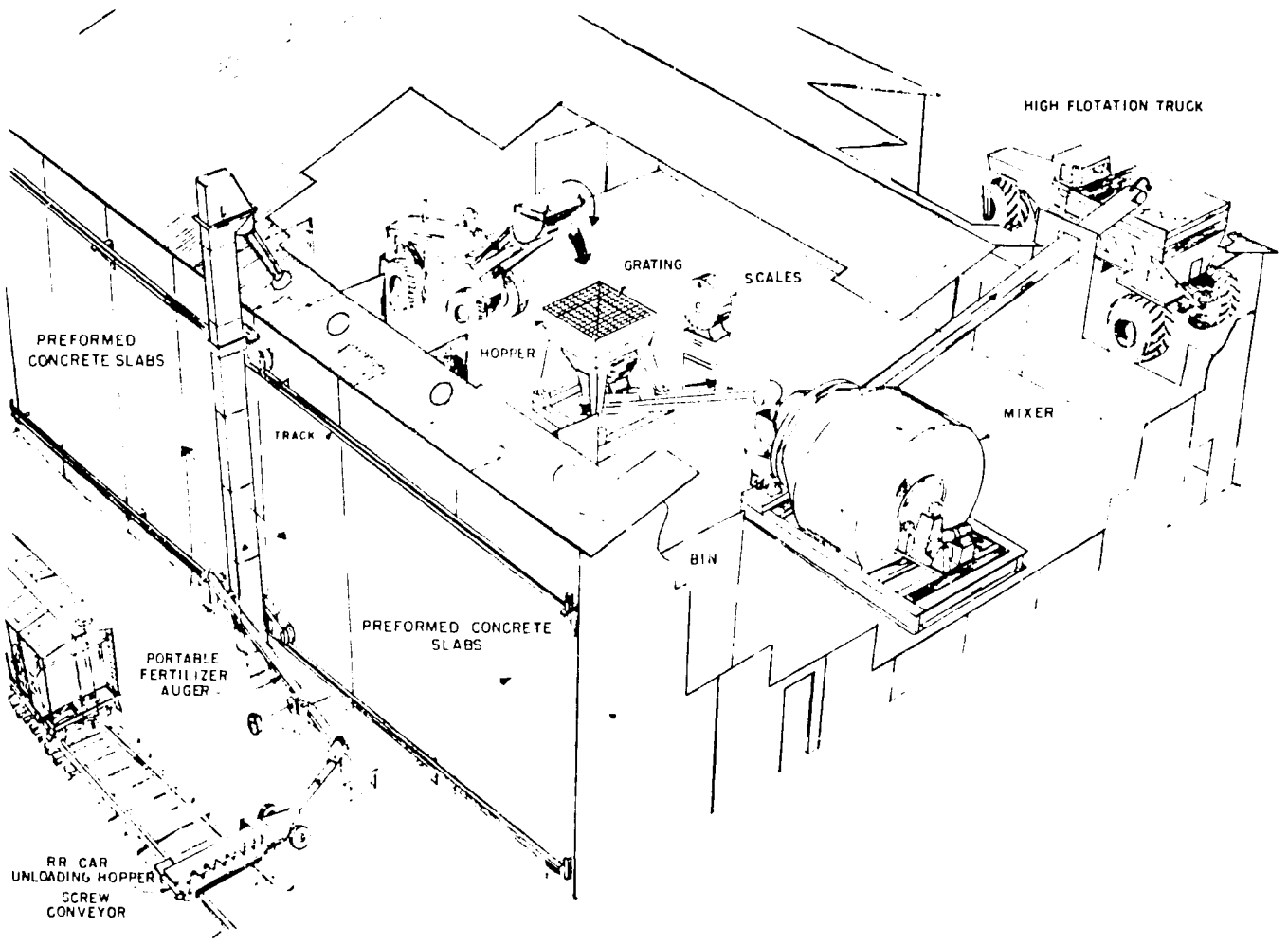

Figure 12. Typical bulk-blending plant

Wyoming, and in central Tennessee where the main deposits of phosphate rock are located. In the processes for production of major phosphate intermediates, the main problems are collection of particulates and fluorine from the plant environment and from stack effluents (29). Noise control in operating areas also is being dealt with. Although the imposed standards are quite rigid, they are being complied with by applying good common sense, good housekeeping and maintenance, and by large investments in well-engineered plant equipment for dust collection and scrubbing. Some systems used were described earlier and are shown in figures 8-10. These plants also are moving to essentially zero discharge of contaminants in

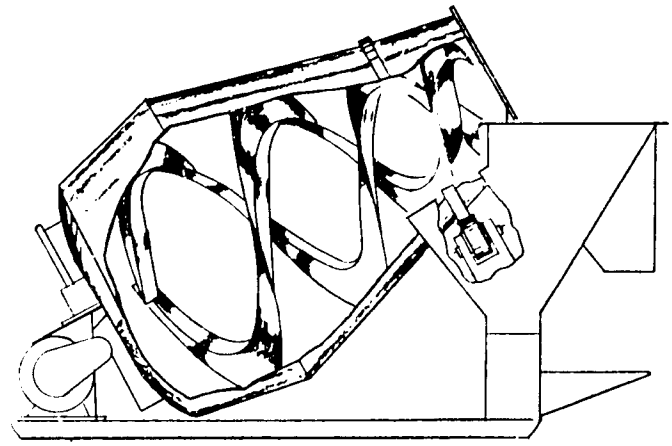

Figure 14 Concrete mixer-type blender

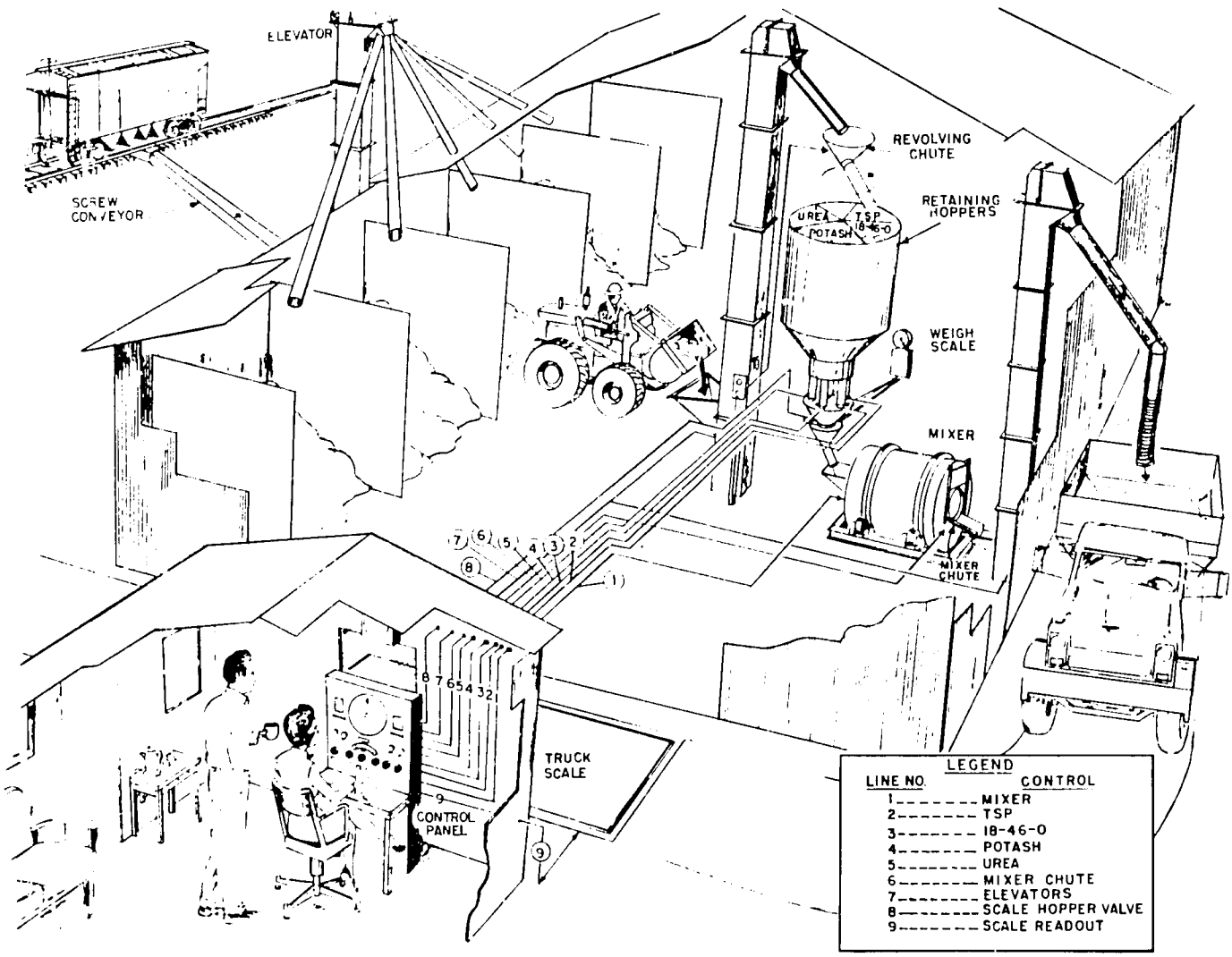

Figure 13. Highly automated blend plant with remote operating board

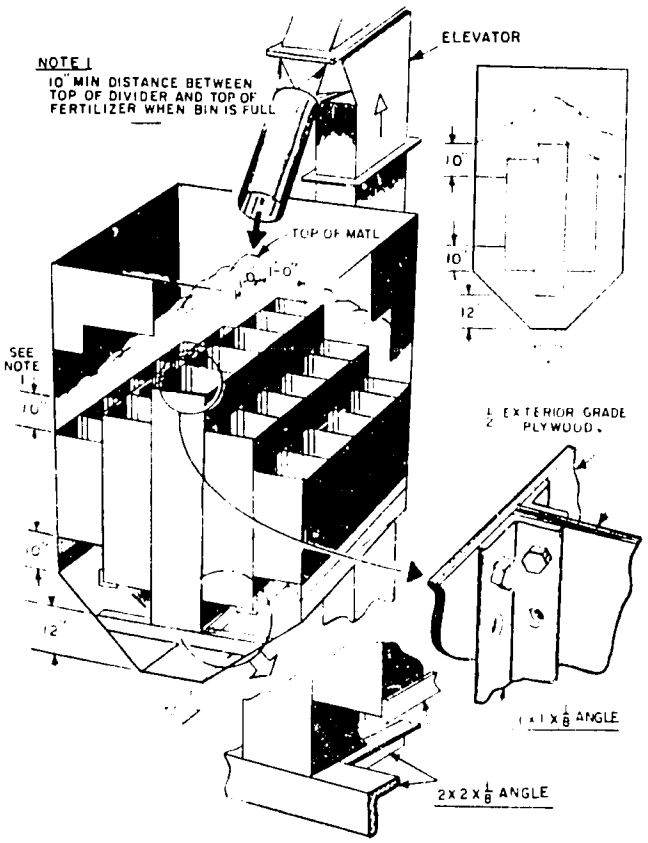

Figure 15. Antisegregation dividers for holding hopper

aqueous wastes. Anyone visiting the major phosphate production centers for the first time in several years can readily see the dramatic improvements.

Plant management for the most part has been diligent in making needed investments and in insisting on better operating and maintenance practices that decrease environmental problems at the source. Many of the large production complexes now recover fluorine in salable form for use by the aluminum or other industries. With the present escalated prices for uranium, work is underway again on its recovery from wet-process phosphoric acid. At least one semiworks system is in operation, and commercial units are being installed in the United States. Japan announced a new solvent extraction process for recovery of uranium in early 1977 (30, 31).

The Nitrogen Fertilizer Industry

Problems for the primary nitrogen producers generally have not been so massive as for the phosphate segment of the industry. The main problems are in the area of noise,

Figure 16. High flotation applicator, 17-ton capacity

dust, and fumes in the operating area and in reaching essentially "zero discharge" in aqueous wastes. Engineers have, in many cases, found practical solutions to the aqueous wastes problems with lower investment than had been visualized.

In plants for production of ammonium nitrate and urea there are several problem areas. In addition to those of aqueous wastes, there are formidable problems in decreasing NO_x emission in stack gas from nitric acid plants. In several cases, ingenious plans have proved effective, although there still are technical problems with catalytic combustion and ion exchange. Extended absorption seems to be favored by many. This involves another stage in existing plants and a larger tower in new plants. TVA has used existing refrigeration effectively and economically. There is not yet a consensus as to the best means of meeting the standards on NO_x emission.

Neutralizers for reaction of nitric acid and ammonia, and concentrators, have long imposed a difficult problem in control of fume and particulates emission. The aerosol-type fume is difficult to remove by scrubbing. This problem has been dealt with by sealing the system to essentially exclude air that is a carrier for the aerosol, and by use of a comparatively low-cost condensing-type scrubber. Precise control of pH in the neutralizer is an effective measure in the entire system.

The other main problems are in control of aqueous wastes as discussed for other plants. The greatest remaining problem in prilling plants for ammonium nitrate and urea is removal of fume and particulates from the huge volume of stack gases from the prilling tower. There have been some reasonably effective innovations such as confinement and collection of a smaller volume of air by use of a collection shroud just below the spray headers at the top of the prilling tower where most of the fume and particulates are formed. The much smaller volumes of air handled in pan granulation and Spheroidizer granulation systems, as discussed earlier, seem destined, along with other factors, to lead to selection of granulation rather than prilling in many new plants.

The Potash Industry

Very large investments by potash producers for perfecting the deep-mining technology and for adequate control of atmospheric and aqueous effluents in the Canadian facilities have for the most part been effective. Since these facilities are comparatively new, advantage was generally taken of latest technology and practices in environmental control.

Environmental Problems in Production of Finished Fertilizers

Finished fertilizers in the United States generally are produced in regional or local plants. There are three particular types of plants: (1) granulation plants producing homogenous NP and NPK fertilizers, (2) bulk-blending plants, and (3) fluid fertilizer plants (32). Environmental controls in granulation plants are about the same as in the basic phosphate and nitrogen fertilizer complexes. The problems include control of noise, particulates, and fumes in the working areas; control of contaminants in effluent water; and control of fluorine, other fumes, and particulates in stack emissions. The addition of adequate, but expensive, dust collection and gas scrubbing equipment created a very difficult financial situation that led to the closing of some marginal operations. A number of engineering firms have worked effectively with industry management in arriving at financially tolerable solutions to pollution problems in regional and local plants.

The main environmental problem for superphosphate plants, which manufacture this basic intermediate for use in granulation plants, is removal of fluorine emissions (29). Companies which have generally been most successful use a venturi-type scrubber, as shown in figure 17.

Probably the most troublesome problem in granulation plants is emission of particulates in the working area and from stacks. Part of the particulate is of the submicron size, and its removal usually requires use of a venturi-type scrubber or bag filters. Figure 18 shows a typical NPK granulator fertilizer plant that has a bag filter. In this design the dust-laden air from the granular and cooler is used as secondary air for the dryer, and the exhaust gases from the dryer are passed through a set of bag filters. The temperature of the gas to the bag filter is kept several degrees above the "dew point" of the gas so that the dust will not cake in the bag. When this is done,

the dust is easily discharged. This dust is returned to the granulator where it is incorporated in the granular products.

Since bulk-blending plants handle and blend finished intermediates which often are dusty, dust problems are sometimes difficult. They consist mainly of confining and collecting the dust and in handling the granular intermediates to minimize formation of additional dust by attrition. Usually the major source of dust is the elevators; dust seals for elevator boots, which were described earlier for warehouses, are helpful. Some companies have found that replacement of bucket elevators with positive discharge elevators is also helpful. The former elevator has a constant stream of material which falls back to the pit of the elevator because the buckets do not empty completely. This causes dust emission from the boot of the elevator. The buckets of the positive discharge elevator empty completely; therefore, no dusting occurs at the elevator boot. A number of commercial firms treat their materials with a dust suppressant, such as oil or liquid fertilizer in the proportion of 0.5% to 1.0% by weight. Figure 19 shows how suppressant is sprayed onto granular fertilizers as they discharge into a chute.

Environmental problems in liquid fertilizer plants are simplest of all. They consist mainly of avoiding or confining spills, pump leakage, etc. Generally, effective, simple and low-cost methods have been developed.

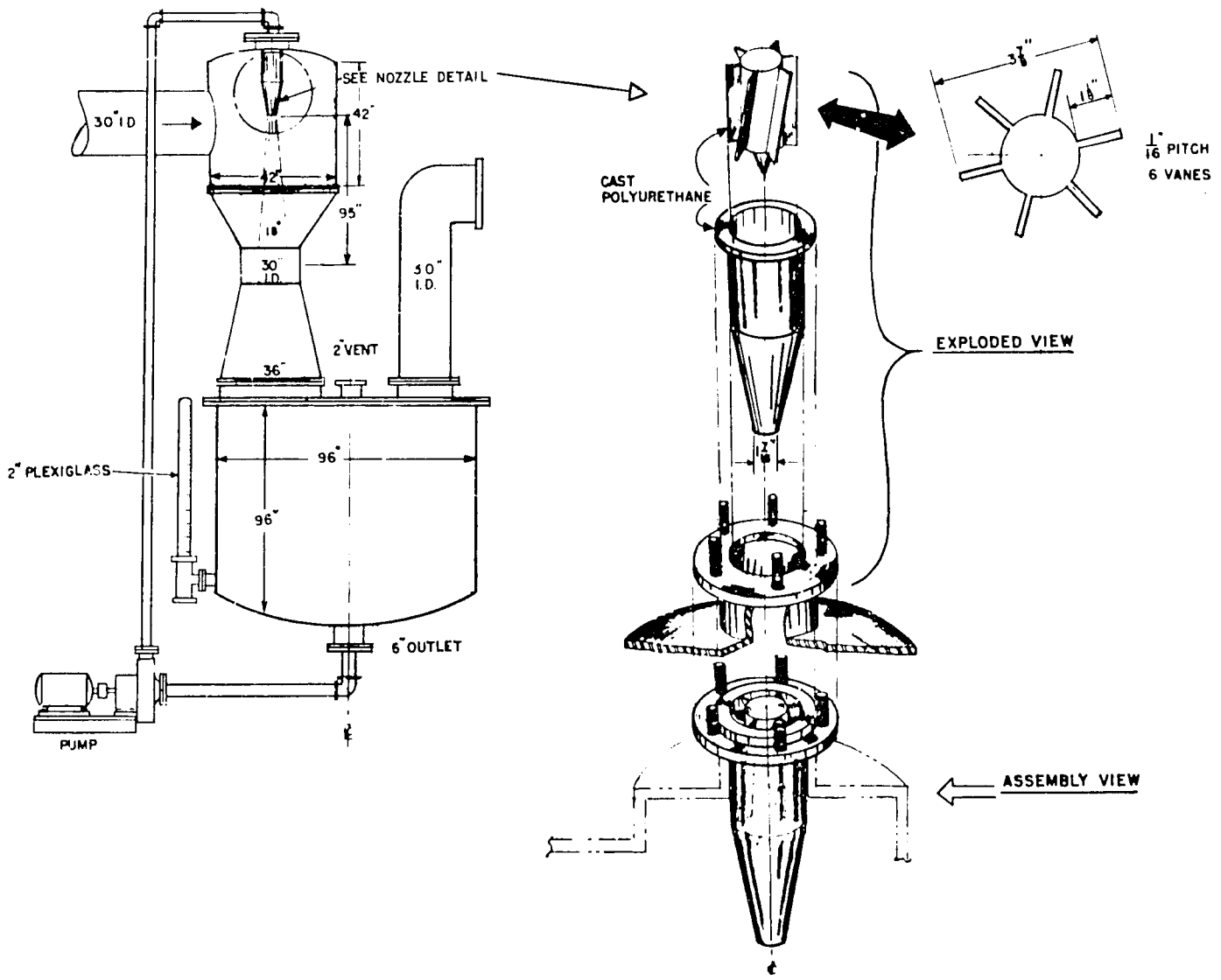

Figure 17. Venturi type scrubber for ordinary superphosphate plant

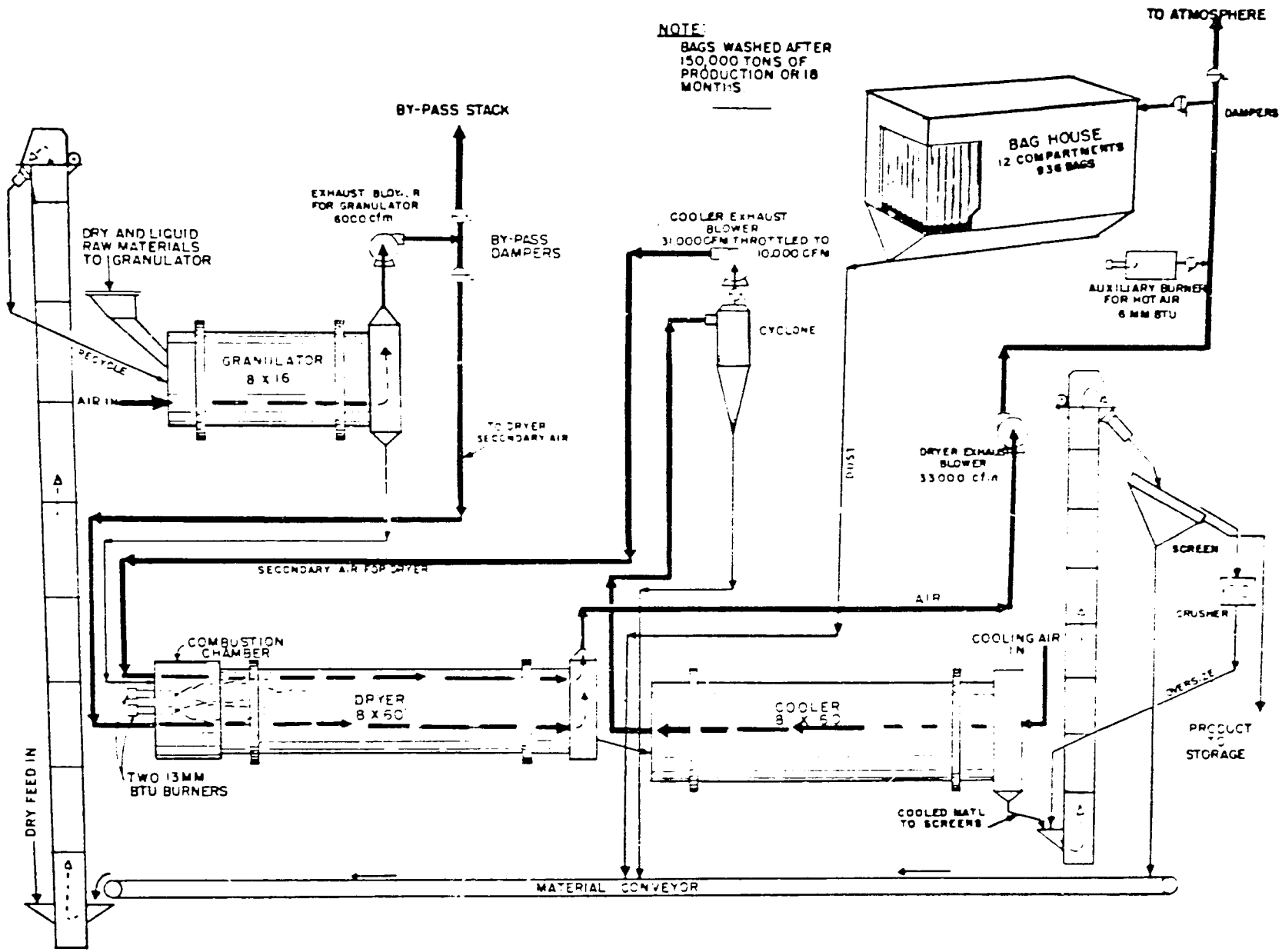

Figure 18. Bag filter system of typical ammoniation-granulation plant

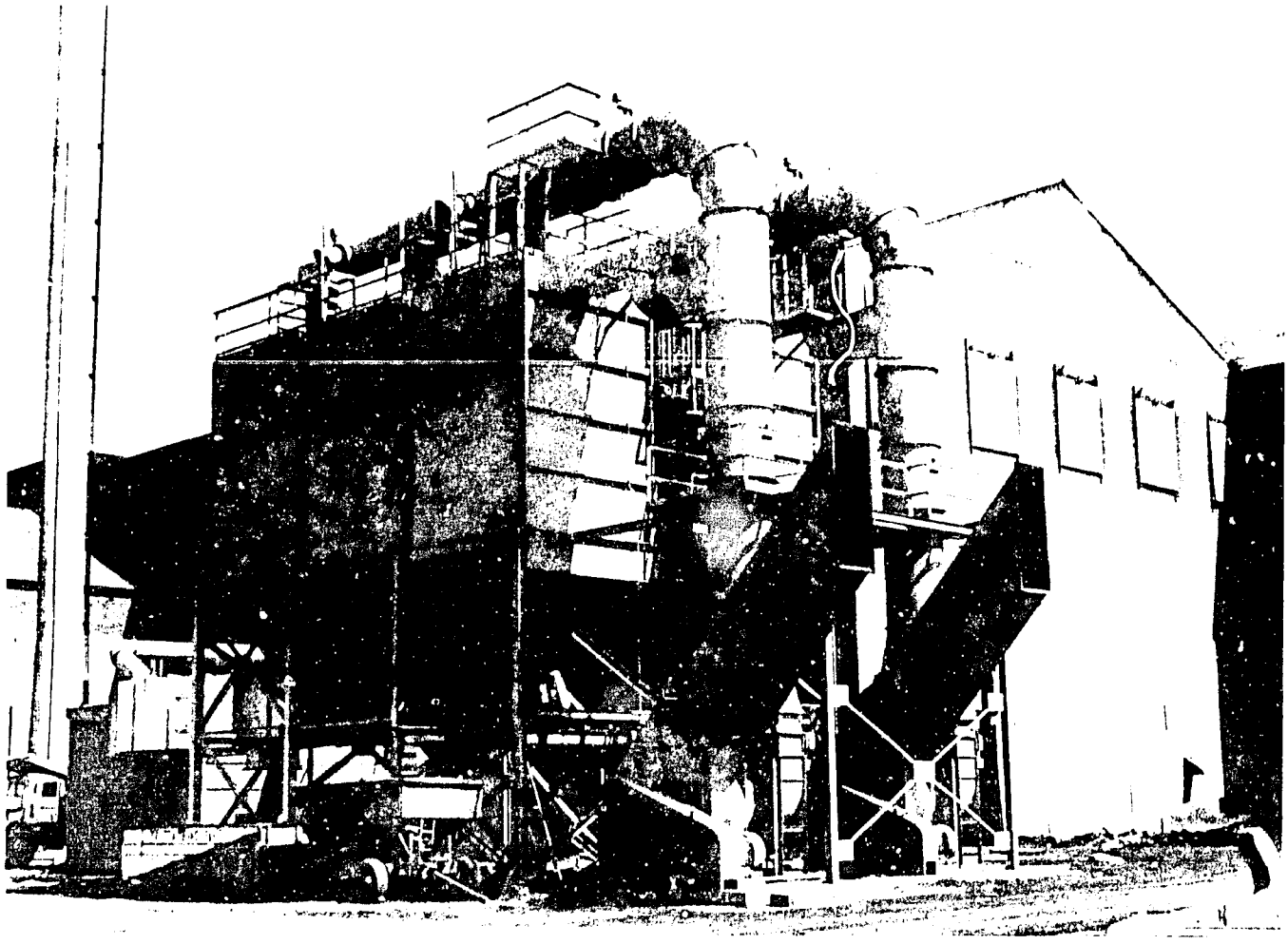

Bag filters are finding wider use in fertilizer plants

Environmental Problems in Storage, Handling, Shipment, and Application of Fertilizers

All segments of the industry have similar problems in storage, handling, and shipment of liquids. The main safeguard in storage of liquids is to provide adequate diked enclosures that would contain the entire contents of tanks in the event of a massive rupture or spill. Problems in storage and handling of solid materials are mainly concerned with control of dust in the working area.

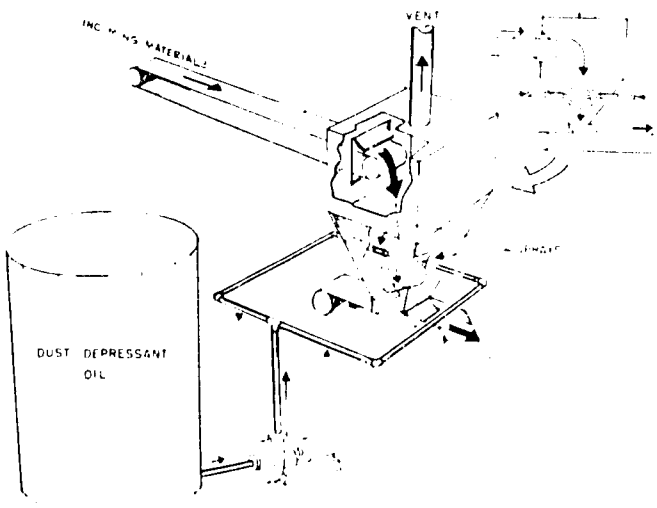

Figure 19. Spraying dust depressant on fertilizer materials

One of the main potential hazards in shipment of intermediates and fertilizers is massive leakage of anhydrous ammonia. There have been several instances or threats of problem leakage when a tank truck overturned or tank cars derailed. The barge shipment of other liquid intermediates such as nitrogen solutions, ammonium phosphate fluids, and phosphoric acid has also come under special scrutiny. Regulatory agencies now require that these barges have two shells (double bottoms). Major catastrophies, due to explosion of ammonium nitrate several years ago, led to very rigid controls to prevent shipment of any detonators or combustible material of any kind, along with shipment of ammonium nitrate.

The main concern in application of fertilizers is the prevention of surface-applied material from washing into streams or soluble nutrients leaching out into ground water or streams. TVA is cooperating with universities in studying and obtaining actual data

to evaluate this potential problem. Data (so far) obtained from watersheds in the Tennessee Valley area do not indicate any appreciable problem. Data also are being obtained in cooperation with the state universities in other parts of the United States which will provide broader evaluation.

The Energy Situation

The depletion of energy resources and the increasing cost of energy pose serious problems for the fertilizer industry. This problem of energy dependency is laced throughout the fertilizer industry from processing of basic raw materials through to production, transport, and application of finished fertilizers.

Considerable quantities of energy are required in mining phosphate rock, sulfur, and potash. The requirements for mining phosphate and potash are low in comparison with that required to produce ammonia. Natural gas is almost the exclusive feedstock for ammonia production in the United States. Although ammonia production requires only about 3% of the U.S. natural gas output, it has been on allocation. Prices have increased sharply and likely will go higher. The very severe winter of 1976-77 saw many ammonia plants shut down for several weeks because natural gas was not available. Our known reserves of natural gas may not last more than another 20 to 25 years; therefore, the United States must turn to alternative feedstocks.

Coal is one versatile energy resource that the United States has in abundance, but it is difficult and expensive to use as feedstock for ammonia. During 1975 TVA, The Fertilizer Institute, and others identified the need to develop and demonstrate efficient technology for the production of ammonia from coal as the number one R&D need for the fertilizer industry. As a result, the TVA Ammonia from Coal Projects was initiated. A coal gasification and purification unit capable of processing a variety of coals will be retrofitted to TVA's existing 225-ton-per-day ammonia plant. It is anticipated that the engineering contract for the unit will be awarded in 1978 with operation scheduled for early 1980. The technical and economic information the U.S. fertilizer industry needs for evaluating coal as an alternative to natural gas for ammonia production will start becoming available in 1980.

Wet grinding of phosphate rock, and feeding it in that form to wet-process acid plants, is being carried out in several plants. This saves fuel for drying of the rock and eliminates a major source of dust.

In plants producing intermediates or finished fertilizers, the main energy requirements are for raising process steam for miscellaneous uses and fuel for drying the fertilizers. Electrical energy for driving the large equipment also is a significant cost component. In large phosphate and nitrogen fertilizer complexes, the evolved process heat is used effectively to produce much of the steam required at the complex. A large source of this energy is from sulfuric acid plants used to produce the acid needed in manufacture of wet-process phosphoric acid. Prior to the early 1970's, costs of steam, natural gas, and fuel oil were so low that this cost component in production of fertilizers was not very significant. The "energy crunch" starting in 1972-73 changed all of this. Allocation of natural gas and fuel oil resulted in curtailed operation, and the doubling or tripling of price led to serious thought, planning, and action.

Energy requirements for production of some main fertilizer intermediates are shown below (33).

	Million Btu's per ton of product
Wet-process acid (54% P_2O_5)	5.4
Ammonia	34.5
Urea[a]	22.5
DAP[a]	13.6

[a] Includes energy for production of the ammonia and wet-process acid used as intermediates.

Transport of fertilizer raw materials, intermediates, and finished products requires a substantial amount of energy. Comparative energy requirements per metric ton-mile for various modes of transport are tabulated below (33).

Type of transport	*Btu's/metric ton-mile*
Pipeline	495
Rail	740
Water	750
Truck	2,650

As can be seen, truck movement—the most common form of transport for bulk and bagged finished fertilizers—is by far the greatest consumer of energy. The cost of

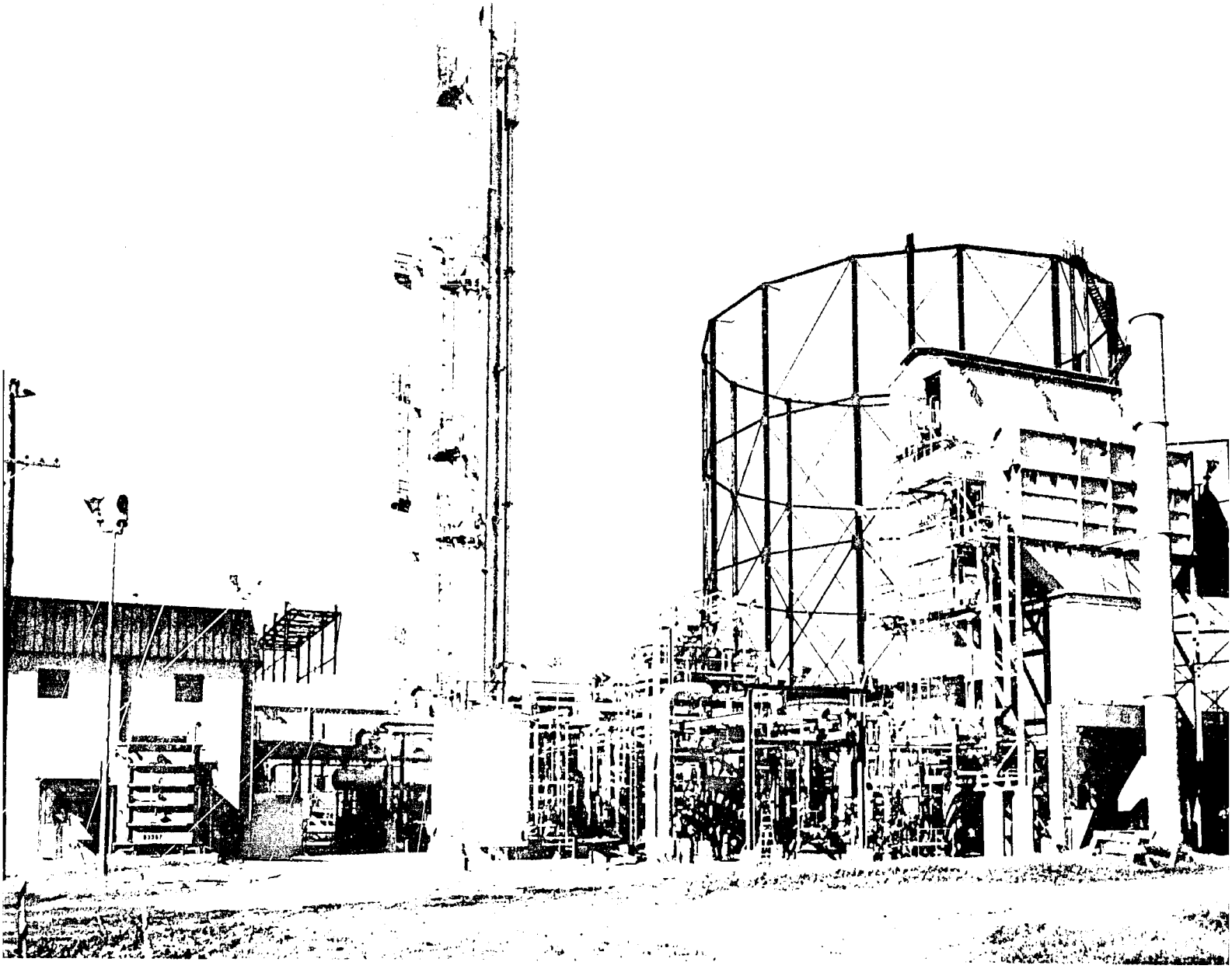

A coal gasification system is being retrofitted to TVA's ammonia plant for studies of use of this plentiful feedstock

truck transport will continue to escalate as gasoline prices increase.

Plastic film bags are a petrochemical-based product and therefore are a comparatively high consumer of energy resource. The heavy trend toward bulk handling, transport, and application of granular and fluid fertilizers results in savings of this energy component. Energy as fuel for operation of fertilizer application vehicles is not a very important component.

Adoption of U.S. Fertilizer Technology In Other Countries

Several important fertilizer products and processes developed in the United States have been adopted in other countries during the past 40 years or so. The first major product was TSP. TVA's simple and low-cost process for TSP using a cone-mixer, and widespread introduction and evaluation of concentrated superphosphate in the United States in the 1930's and early 1940's, paved the way for TSP in world production and use. Similarly, TVA's demonstration production and widespread evaluation of ammonium nitrate as a fertilizer following World War II was instrumental in this synthetic nitrogen fertilizer becoming an accepted higher analysis product throughout the world. Imperial Chemical Industries in the United Kingdom, B.A.S.F. in Germany, and other organizations also contributed significantly to growth in production of ammonium nitrate.

The comparatively simple and very versatile and dependable TVA ammoniator-granulator process was introduced to industry in 1953. The following 10 to 15 years saw this basic process predominate in many countries in production of NP and NPK high-analysis granular fertilizers. The variety of grades with very good physical properties that could be produced revolutionized storage, handling, and application of fertilizers. The P.E.C. (French) - C. & I. Girdler (U.S.) process using a Spheroidizer for granulation was installed in a number of plants in Latin America and Asia (32).

The most rapidly adopted U.S. process, and the one that had the most impact in new fertilizer production facilities throughout the world, was the TVA process for production of granular ammonium phosphates (DAP and MAP) that came on the scene in 1961 (1). Few phosphate fertilizer production facilities built anywhere in the world since that time do not use this technology. As a result, ammonium phosphate production and use worldwide surpassed OSP and TSP by 1970.

Prilling of ammonium nitrate developed concurrently in Europe and the United States and was almost the universal practice for this product and for urea until the mid-1970's. Granulation processes developed by TVA and C. & I. Girdler-Cominco are being used for urea and ammonium nitrate in a number of facilities built since 1973. Granular products have greater crushing strength and are much better suited in size for bulk blending than prills. USAID has been influential in promoting information concerning granulation technology and in the setting of standards for products.

Urea synthesis process technology was developed mainly in Europe and Japan, and several good processes are now in use throughout the world. Urea became the world's leading nitrogen fertilizer in 1975. Combinations of urea and ammonium phosphate (the leading N and P_2O_5 fertilizers) to produce high-analysis UAP grades such as 28-28-0, 35-17-0, and 19-19-19 were developed by TVA. USAID assisted in application of this technology for the first time on a commercial scale in two plants in India that now are producing efficiently. Later TVA technology led to melt-type granulation using a simple pipe reactor. Plants using this development, with its lower investment cost and energy-saving technology, are in operation in Japan, Spain, Brazil, and Australia.

Other U.S. developments (mainly by TVA) include bulk-blending technology, polyphosphates, and fluid fertilizers. These systems and practices are moving more slowly to other countries than those just discussed because they are particularly suited to the overall fertilizer industry and agriculture in the United States. Bulk blending has been adopted in Brazil, the United Kingdom, and a few other countries, but growth has been slow. Fluid fertilizers are now produced in France, Belgium, the United Kingdom, South Africa, and the Soviet Union, but growth also is slow (32).

Bulk blending has been recommended in some instances after thorough planning and evaluation studies in developing countries. TVA and the International Fertilizer Development Center (IFDC), through USAID, participate in this planning. Low capital outlay, flexibility, and adaptability to low initial production and gradual growth, are some main advantages of bulk blending. The bulk-blending system also should allow orderly and effective movement from import of major intermediates to basic domestic production of one or more intermediates when justified. Marketing and distribution systems can be developed through blending, and a move to basic production made when volume justifies (12, 32).

USAID has been active in supporting the development and evaluation of economical bulk movement of granular fertilizers and liquids. TVA, through support of USAID, monitored and documented the second very successful bulk shipment of urea (18,750 tons) from Kenai, Alaska, to Singapore in 1971. There were backhaul legs for two other products on the return trip (34). This, and later good experience with only reasonable precautions, led to bulk movement of urea being quite common today. TVA-USAID also pioneered in planning and monitoring of bulk shipments of fertilizers to Pakistan, Ghana, and India.

The first ocean shipments of wet-process phosphoric acid were from Mexico's F.F.M. to Europe and later to India and South Africa. Later shipments were made from South Africa and Iran. Massive shipments of

wet-process superphosphoric acid from Florida to the Soviet Union are planned.

TVA has worked with USAID throughout the years in the development and evaluation of modified or new analytical procedures for fertilizers. There also has been cooperation in development and evaluation of treatments to ensure good storage, shipment, and handling properties. Standards were developed for use by industry on fertilizer products shipped in programs of USAID. Results were made available to world industry.

Means for Dissemination of Technology to Other Countries

The USAID and other world organizations such as UNIDO, FAO, and the World Bank have been instrumental in making details of technology from TVA and the U.S. fertilizer industry available to developing countries. Numerous visitors to TVA and the U.S. industry, and planning and development missions in these countries, have led to selection and implementation of appropriate process technology. Cooperative efforts have also been instrumental in planning and implementing marketing and distribution systems in a number of countries. Developing a market through proving the value of fertilizer, and moving the fertilizer through distribution channels to the farmer in good condition, are fully as important as properly designed and operated production systems.

For the past 30 years the number of technical visitors to TVA's National Fertilizer Development Center (NFDC) has increased steadily. In 1977 there was a total of 1,576 visitors, including 446 from other countries. These visits provide excellent dissemination of the extensive information and experience available from NFDC. Those who visit can draw on the information and services of the Technical Library, observe pilot-plant and demonstration-plant operation, and participate in detailed and in-depth discussions with staff members who have long years of experience in most areas of fertilizer technology. Visitors now have the opportunity also to visit the new International Fertilizer Development Center located adjacent to the NFDC. A main mission of IFDC (a public international organization with support from several countries) is the dissemination of technology to other countries.

Specific training courses in fields of fertilizer process technology, economics and marketing are held by TVA and IFDC. A number of those attending are sponsored by USAID. TVA holds a demonstration of advancements in fertilizer process and technology every two years. About 400 visits from the United States and world industry attend this open house to observe and hear about new technology. TVA assists in joint meetings with TFI and other organizations. Staff members present papers on research findings nad other topics of current interest at national and international meetings.

TVA and, more recently, IFDC work cooperatively with organizations such as USAID, the World Bank, and FAO in surveys of fertilizer production, marketing, and use. These in-depth and up-to-date surveys greatly assist those planning fertilizer facilities in developing and industrialized countries.

TVA's Technical Library is the most comprehensive one in the world on fertilizer technology. The library staff responds to numerous requests for publications and other information and many people visit and are assisted in literature searches. About 1,500 publications on a broad spectrum of fertilizer technology are indexed and available as reprints. **Fertilizer Abstracts** is available monthly for a small subscription fee.

Future Innovations

Although there seem to be no really new types of fertilizers (in composition) that likely are to become important soon in U.S. and world trade, some modified products with advantageously different physical properties may find a significant place. These innovations, over the long run, may affect the type, nature, and cost of intermediates and finished fertilizers moved in the U.S. and world trade. USAID programs for providing these materials would also be affected.

New Types of Products

Products made by the economical and energy-saving melt-type granulation processes discussed previously likely will become important. Production of 11-55-0 grade of ammonium phosphate instead of 18-46-0 DAP

results in shipment of nearly 20% more phosphate; this can be important as higher phosphate payload, particularly in ocean shipment. MAP, 11-55-0, is also compatible with TSP and OSP, whereas DAP will react with most superphosphate materials and cause bag or pile set. In most instances, MAP can be used to replace both TSP and DAP. It is compatible with urea, whereas most TSP will react with urea to cause caking of the mixture. Granular urea and granular ammonium nitrate products are listed in current USAID specifications and should be favored in the future because they have greater physical hardness than prills.

Wet-process superphosphoric acid (68%-70% P_2O_5) with 20%-25% of its P_2O_5 occurring as polyphosphate (low-conversion superphosphoric acid) has good fluidity and is much easier to handle and ship than the acid produced earlier with higher polyphosphate content. The increased payload of about 50% as compared with merchant grade (52%-54% P_2O_5) acid would result in substantial savings in shipping costs. Availability of this intermediate might promote production of high-analysis liquid fertilizers of good quality in other countries. The value of superphosphoric acid has been commercially proven (35). With this high-strength acid it is possible to produce granular homogenous NPK mixtures in a small, comparatively simple granulation plant. The granular ammonium phosphate products made with this acid have excellent storage characteristics, due at least in part to the polyphosphate content. They are hard, resist degradation, and do not cake badly in the bag or bulk storage. If the planned massive shipments of low-conversion wet-process super acid from a major fertilizer producer in the United States to the Soviet Union develop satisfactorily, this experience should pave the way for others (36, 37). It will be necessary to keep the acid warm during transport for adequate fluidity.

Sulfur-Coated Urea (SCU)

A modified product, SCU, is the most unique new fertilizer that may become important. SCU is a controlled release fertilizer with several advantages. It has been developed by TVA through extensive pilot-plant work and has been tested agronomically in all 50 states and 58 countries. It is designed to liberate 25%-30% of its nitrogen the first week or so, but the remainder is released gradually over a period of several months. This pattern of controlled release allows more efficient use of N by the plants. Fewer applications greatly decrease farm labor required.

TVA will have a 10-ton-per-hour demonstration plant in operation late in 1978. It will provide larger quantities for more thorough and widespread testing and market development. This program should determine crops and agricultural situations in which this fertilizer more than justifies the approximately 30% higher cost of N than for uncoated urea that has been estimated.

In agronomic tests so far, SCU has given particularly good results on sugarcane, upland or intermittently flooded rice, forage, pastureland, greenhouse and field fruits and vegetables, and lawn and garden specialty fertilizers. The essentially impervious coating eliminates problems due to absorption of moisture in handling, storage, and bulk shipment. The coating also eliminates any appreciable loss of ammonia on surface application; this would alleviate a major problem with use of urea where soils have high pH—such as in Pakistan, Canada, and Iran (38, 39).

Since most of the crops that respond particularly well to SCU are important in Asia and South America, USAID may need to become involved in broader testing and seeding programs. A few commercial fertilizer producers in the United States and other countries have test production units planned or in operation.

Urea Phosphate and Other Phosphate Fertilizers

Urea phosphate (UP) is a crystalline material with relatively high purity that is produced by reaction of urea with phosphoric acid as shown by the following equation:

$$CO(NH_2)_2 + H_3PO_4 \longrightarrow CO(NH_2)_2 \cdot H_3PO_4$$

The grade of UP is 17-44-0 (N-P_2O_5). This compound has been known for a long time and substantial quantities are produced in Eastern Europe for use as an animal feed supplement. Both the phosphate and urea

components are reported to be well within specifications and quite satisfactory for use as animal feed supplements. Modest amounts of UP are produced in Spain as an intermediate for use in preparation of nonfertilizer-related chemicals by pyrolysis.

The TVA at its National Fertilizer Development Center has conducted laboratory and small pilot-plant tests of the preparation and use of UP since 1971. Merchant grade wet-process acid (WPA) is used. The thrust of TVA work has been directed toward use of the UP as a comparatively pure intermediate for preparation of high-quality liquid fertilizers. Only 10%-20% of the impurities (Fe, Al, Mg, etc.) in the wet-process acid feed remain in the precipitated UP crystals. This low level of impurities in polyphosphate liquid fertilizers, prepared by pyrolysis of UP and ammoniation, results in good storage properties for extended periods.

A pilot plant with capacity of about 1,000 pounds per hour of UP was put into operation by TVA in early 1977. Overall operation has been good and the two main problem areas anticipated—fouling of cooler surfaces by deposition of fine crystals and centrifugation—have been less serious than expected (40).

Small-scale work has continued on pyrolysis of UP and on its use in preparation of liquid fertilizers of high quality. At temperatures above about 250°F (120°C), a large part of the phosphate in UP is converted to polyphosphate. When ammoniated, the urea-ammonium polyphosphate that is formed (15-28-0) is a very good base solution for preparation of NPK liquids of high quality. Polyphosphate content of products is 50% or more of the total P_2O_5. Additions to the pilot plant for the pyrolysis and liquid fertilizer preparation steps are underway. A flow diagram of the system for preparation of UP and its pyrolysis and ammoniation to produce ammonium polyphosphate liquid fertilizers is shown as figure 20.

The required heat input, supplemental to heat of the ammoniation reaction, is about 18,000 Btu per ton of P_2O_5. This is only a small fraction of the 2.0-2.5 million Btu per ton of P_2O_5 required to concentrate merchant grade wet-process phosphoric acid (54% P_2O_5) to low conversion superphosphoric acid for use in preparation of liquids. The UP route

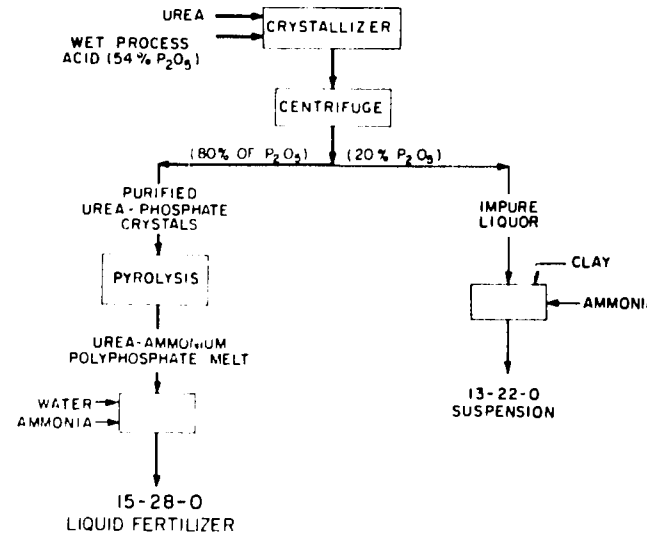

Figure 20. Urea phosphate system for production of liquid fertilizers of high quality

might also be less expensive than purification of wet-process acid by methods now in use.

UP could become important in the future in the United States and other countries where liquid fertilizer production is substantial. The bonus of UP being a good animal feed supplement could help make such operations economically.

Through use of the pipe reactor melt processes, a large variety of ammonium phosphate sulfate grades having high $N:P_2O_5$ ratios can be produced. Such grades include 20-5-0-22S, 18-9-3-18S, or granular ammonium sulfate 21-0-0-24S.

Global Movement of Nitrogen Solutions

UAN solution (28%-32% N) is not a new product, but its production and use are growing rapidly. Production of UAN solution is comparatively simple and economical. Addition of a small proportion of corrosion inhibitor (usually about 0.05% of P_2O_5 as a phosphoric fertilizer solution such as 10-34-0 ammonium polyphosphate) allows storage in low-cost mild steel tanks (16). A simple and convenient continuous process used by TVA for production of UAN solution is shown in figure 10.

The essentially trouble-free shipment, storage, and handling of UAN solution in very large quantities demonstrates that it could become an important global commodity. Its importance in world trade, other than

exports to the United States, will depend on whether production of liquid fertilizers moves in a major way into other countries. UAN has been particularly advantageous to those countries that use irrigation. For example, in Mexico, Canada, and the United States, the solution is drip-fed or pumped at a low rate over the periods of irrigation. By carrying out these procedures, nitrogen is "spoon fed" efficiently to the crops, thus decreasing losses of nitrogen fertilizer.

There have been some ocean shipments of ammonia-urea solution (33% N, 19% NH_3, 37.5% urea, and 43.5% H_2O). This solution has a low vapor pressure (only 0.35 kg/cm^2 at 41°C). In Brazil, this low pressure solution has been used to produce granular NPK mixtures. The ammonia in the solution reacts with superphosphate to release enough chemical heat for efficient granulation. It can be shipped in mild steel tanks (41).

Improvements in Bulk Movement

There are so many savings and advantages for shipment of fertilizers and intermediates in bulk that this practice is certain to continue its steady increase in the United States and in world trade. In most shipments so far, the granular fertilizers have been bagged at the receiving port, yet substantial savings in foreign exchange and decreased losses were realized. A comparatively new development of 1-ton (mini-bulk) containers likely will find a place in world movement of fertilizers. These 1-trip or multiple-use durable woven polypropylene bag units are designed for easy handling with forklifts or small hoists. They can be stored at least 3-high indoors or outdoors with full weather protection. They have remained outdoors for months at plants or on farms with no damage to the products. They can be quickly discharged for conventional bagging or for filling application equipment. Units of this type may have advantages over actual bulk transport in some situations (28). They can be easily removed from a ship without damage and loss due to spillage, and stored outside, if necessary, in a non-congested area of the port; then they can be moved to a bagging system, if bagging in conventional 50-kg bags is desired, or transported to inland points by rail or truck.

Containerized shipments are increasing steadily, particularly for high-value cargoes. Unless much lower cost container units are developed, and the present payments in lieu of stevedoring costs are overcome, this very secure system for containerized shipment by land, rail, and sea likely will not find much place in shipment of fertilizers.

The lighter-aboard-ship (LASH) and ship-contained barge concepts (SEA BEE) have great versatility in avoiding lightering or otherwise rehandling commodities at shallow ports or for up-river shipment. Some fertilizer materials, including potash and phosphate rock, are already being shipped this way. Wider use should be expected in shipping fertilizer raw materials, intermediates, and products by these or similar schemes in the future. The cost and losses in transloading can be eliminated in some situations for river movement, the time and cost of lightering can be avoided, and congestion at the jetties in the port can be relieved. Some port officials dislike these systems because of slower and more tedious loading at the shipping point. USAID supported TVA studies of innovations that may be advantageous in transport of fertilizers, raw materials, and intermediates in bulk.

A major need for loading bulk fertilizers moved in ocean trade is a fully dependable system for doing this work pneumatically. The "high-density" systems that utilize a small volume of air to cushion and float the somewhat fragile fertilizer granules (as compared with cereal grains, alfalfa pellets, etc.) result in only moderate decrepitation when operated properly. However, there is room for considerable improvement.

Innovations in Production of Fertilizers in Solid Form

The granulation systems that produce typical fertilizers require rugged equipment, several handling and processing steps, handling of large tonnages of throughput, movement of large quantities of air, and consumption of considerable quantities of fuel and electrical energy. There also are attendant air and water pollution control problems as discussed previously.

Over the years there has been sporadic experimentation and practice with systems such as compaction, flaking, extrusion, melting and casting, and tableting to form strong flakes, cubes, or pellets of fertilizers. None of

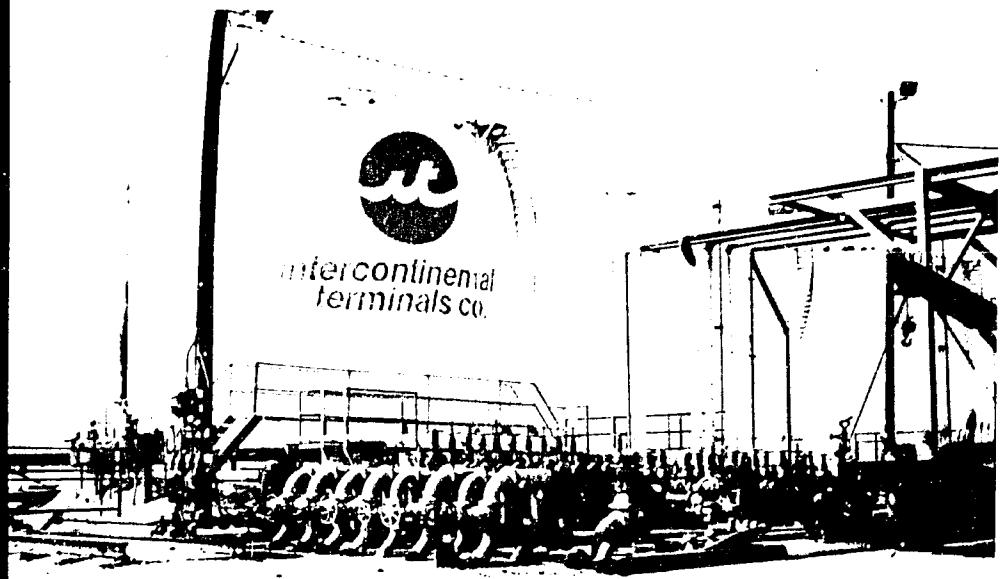

Ocean shipment of fluid fertilizer materials, mainly urea-ammonium nitrate solution, has increased sharply. Automated, high-capacity handling systems for bulk cargoes facilitate loading and unloading.

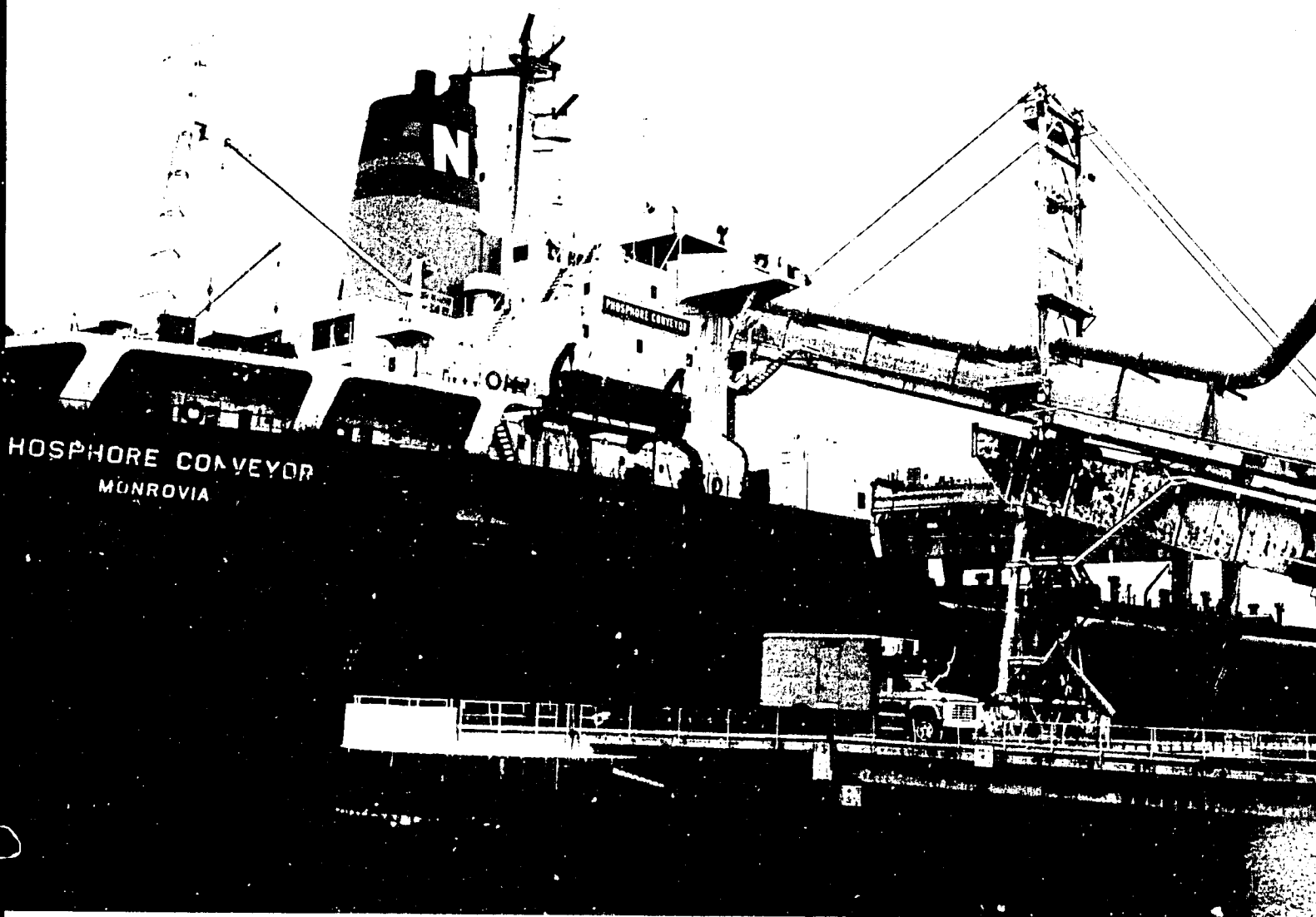

these methods has caught on in fertilizer production, except for production of granular potash, where compaction and flaking systems are one of the methods used.

A major disadvantage of these systems for fertilizers is the comparatively small capacity (5 to 15 tons per hour) for a mechanical unit. Multiple units would be required for greater production. There also is high wear and maintenance on components such as dies, compaction rolls, and briquetting rolls. Replacement or rebuilding of these expensive components is a major cost item. Chemical heat generally is not available to promote granulation, and moisture content and composition of the formulation must be controlled rather precisely. Feed components usually are refined intermediates or fertilizer products, which increases formulation costs.

On the positive side, these systems require considerably less investment; and only a small fraction of fine material must be fed back, so throughput is low. There is little or no air handling, and drying may not be required. Despite high-pressure compaction, briquetting, or extrusion equipment, the total horsepower requirement is low. Process control is easier than in granulation plants. Organic components such as waste from slaughterhouses can be readily incorporated and serve as effective binders. Pollution problems are much easier to deal with, because there are no chemical reactions and must less dust is formed.

Taking into account the decreased energy requirements, the lesser environmental problems, effect of lower investment on production costs, and the growing trend toward more specific and specialized formulations for fertilizers, some of these innovations may warrant closer examination by the fertilizer industry in the future.

Some Possible Products, Practices, and Innovations in the Longer Term

It would be impossible to pinpoint in any precise manner the important changes that may come about in the longer term—say from the year 2000 on. There are, however, some developing problem areas for the U.S. fertilizer industry that have been identified and must be dealt with. Some of these are, or will be, global problems too.

The Basic Phosphate Industry

The greatest problem, by far, that the basic phosphate segment of the U.S. fertilizer industry faces in the longer term is depletion of or difficulty in mining the higher grades of Florida phosphate rock. Troublesome levels of impurities (Fe, Al, and Mg) are already showing up and grade is beginning to decrease. The fading of the most important of the U.S. phosphate reserves since the first commercial shipment was made from Florida in 1888, poses some real problems. The deposits in North Carolina have a long life expectancy and grade should not change greatly. The vast western deposits in Idaho, Utah, Wyoming, and Montana are of generally lower grade and higher impurity content. Phosphate ore from the western area is used for production of fertilizers (TSP, DAP, MAP, and polyphosphate liquid fertilizer) in the immediate area. There has been no appreciable shipment of phosphate rock out of that area for domestic use and there is no export.

Research and development work is needed to develop technically and economically practical, new or improved processes, or innovations that will allow use of marginal phosphate ores. TVA's NFDC has intensified its efforts to develop improved processing schemes. A new minerals and ore beneficiation laboratory was equipped and put in use in mid-1977. This facility will complement the equipment already available and in constant use for essential petrographic and crystallographic studies. Qualified professional staffing also is being built up. One interesting prospect is direct utilization of matrix or other somewhat similar low-grade materials without beneficiation.

IFDC is installing facilities for studying phosphate ores from a number of countries. A large part of this very important work is in cooperation with TVA. IFDC is also studying processing schemes for ores from new deposits throughout the world.

The Basic Nitrogen Industry

The paramount problem in the U.S. nitrogen fertilizer industry is the diminishing supply of natural gas that is now used almost exclusively as feedstock for production of ammonia. This problem has already taken a toll in seasonal shortages of natural gas that

have required curtailed production and extended shutdown periods. Our utter dependence on natural gas was really brought home to almost all ammonia producers during the bitter winter of 1976-77. The TVA ammonia plant was quite typical and a total of 20 days of complete shutdown was required. Operation at reduced rates was required for the remaining period of November through mid-March.

The U.S. situation with respect to use of naphtha or other petroleum derivatives as feedstock for ammonia production is little if any better than for natural gas. The increasing cost of electrical energy essentially rules out the electrolytic hydrogen route unless major improvements in technology and economics are forthcoming. This leaves only coal that is our single energy resource projected to continue in plentiful supply for several hundred years. In 1976 TVA initiated a major project with the objective of installing a coal-gasification system to provide hydrogen equivalent to 135 tons per day of ammonia for the 225-ton-per-day plant at the NFDC. Experience in Germany and South Africa is being drawn on to the extent practical. This experience has shown that percentage on-time for the coal-based ammonia plants has been low. This coupled with the nearly doubled investment makes overall economics generally adverse. More development work, and particularly practical experience, is needed before coal-based plants can be fully relied on. The TVA coal feedstock system is scheduled to be operational in early 1980.

The TVA plant will serve as a demonstration unit for the industry, and representatives will have the opportunity to study and use data from its operation. This project has highest priority by NFDC in work related to the nitrogen industry.

There have been some recent fundamental developments in the electrolytic process for the production of hydrogen and ammonia. In all of the new processes the power consumption of the cell has been substantially decreased by eliminating the need to generate oxygen. In one system, SO_2 is fed to the cell and the products are sulfuric acid and hydrogen. This process would be particularly attractive to a fertilizer complex since the sulfuric acid could be used to produce phosphoric acid or granular ammonium sulfate, and the hydrogen could be used to produce ammonia. Some scientists have proposed that the byproduct SO_2 from a coal-burning electric generating unit might be used as a source of SO_2 for the electrolytic cell. This process is in the very early stages of development; and even with substantial improvements, the electrical energy requirement remains high. Nevertheless, research throughout the world on electrolytic cells with higher current density and on novel electrolysis schemes has been greatly stepped up. The NFDC is reevaluating electrolytic hydrogen as feedstock for ammonia production and is surveying recent improvements in world technology.

Summary of Probable Trends in U.S. Fertilizer Technology for the 1980's

Generally, separate basic segments of the industry for production and marketing of nitrogen, phosphate, and potash fertilizers are expected to continue in the United States. Some large producers are basic in both nitrogen and phosphate production. Reasons for the separate segments are mainly logistic and economic. Mining and refining of phosphate and potash at the site of these resources establish major production centers near those sites. Centers for production of nitrogen fertilizers are best placed, and will generally remain near the source of feedstock for ammonia production, or strategically located near major markets or along waterways or pipelines.

There likely will not be a major shift to coal as feedstock for ammonia production during the next 10 to 12 years, but several coal-based plants likely will come into operation in the United States. In the longer term, there may be a shift of new ammonia plants to locations near coal resources, as has been the case in South Africa and India.

A recent survey (1976) by TVA and the U.S. Association of Fertilizer Control Officials indicated that there are about 12,000 plants in the United States producing finished NP and NPK fertilizers. Included are about 6,500 bulk-blending units, 3,100 fluid fertilizer

Fertilizer development includes the testing of new products under a wide range of soil, crop, and climatic conditions and activities to acquaint agricultural workers and farmers with their potentials.

plants, and less than 200 plants producing homogeneous granular fertilizers. Average annual production for bulk-blending units was about 3,050 tons; that for fluid fertilizer plants was 2,800 tons. The 96 granulation plants reporting had annual production of approximately 66,000 tons (42).

Bulk handling and shipment of all fertilizers should continue to increase. Successful granulation plants likely will continue to market in bulk through blending and bulk distribution centers and will offer most of the services that have contributed to the success of bulk blending.

It is unlikely that any major new advances in fertilizer application equipment will develop in the near term. The costly and sophisticated "high-flotation" equipment for fluid and granular fertilizers that can apply 300 to 700 pounds per acre of fertilizer at a rate of one acre per minute seems to be near the ultimate. Aerial application likely will increase, and larger pellet size (4 to 6 millimeters) may become the norm for forest fertilization.

The practice of providing pesticides and herbicides in fertilizers, to save the time and cost of separate application, is expected to increase steadily. The rate of growth depends on how quickly farmers become convinced that such practices, sometimes referred to as "weed and feed," are effective, convenient, and economical. The same holds true for "no-till" agriculture—a growing practice in which fertilizer application, weed control, and pest control are combined with planting and there is no followup cultivation. In some farming areas in the United States, "no-till" agriculture makes up 70% to 80% of the practice for major crops such as corn. As a recent speaker put it, "No till certainly has passed the fad stage." Fluid fertilizers are well suited to combination with herbicides and pesticides, including the "no-till" practice.

As discussed in the preceding section, TVA is giving highest priority now and in the near future to energy savings in fertilizer production and to utilization of marginal phosphate ores. Melt-type granulation, using TVA pipe reactors with feeds of ammonia and phosphoric acid, and in some cases sulfuric acid as a secondary reactant, is being adopted steadily in the United States and other countries. Pilot-plant and plant-scale adaptations are included in cooperative studies by TVA and the U.S. industry through TFI. Industry guidance and assistance in studies by TVA of beneficiation and utilization of marginal phosphate rock is being provided through their coordinating organization, TFI.

The work with marginal phosphate rock from Florida and the Western U.S. fields should lead to developments suitable for processing marginal ores from other countries throughout the world. Work is continuing by TVA and IFDC in the study of ores from other countries to characterize them as to mineralogy and crystallography. These studies can lead to selection of feasible and economical schemes for beneficiation; in some cases, they suggest unique schemes for their use in fertilizer production. Both TVA and IFDC have new and improved facilities for independent and cooperative studies and evaluation of phosphate ores as described above.

The U.S. and world fertilizer industry faces perhaps the greatest problem areas and challenges ever. But, as is nearly always the case, adversity and challenges can at the same time lead to opportunities. This vital industry, that produces and markets the single most important input to food production (1 kg of nutrient can produce 7 to 12 kg of additional grain if other inputs are adequate), has risen to challenges in the past. With many other countries throughout the world having come on the scene as major fertilizer producers in the past 10 to 15 years, there will be more experience and help to draw on. Based on the past good track record of the industry, the prognosis should be good.

TVA's new minerals beneficiation laboratory allows study and evaluation of marginal phosphates ores.

TVA's new pilot plant for studies of wet-process acid production from present-day ores.

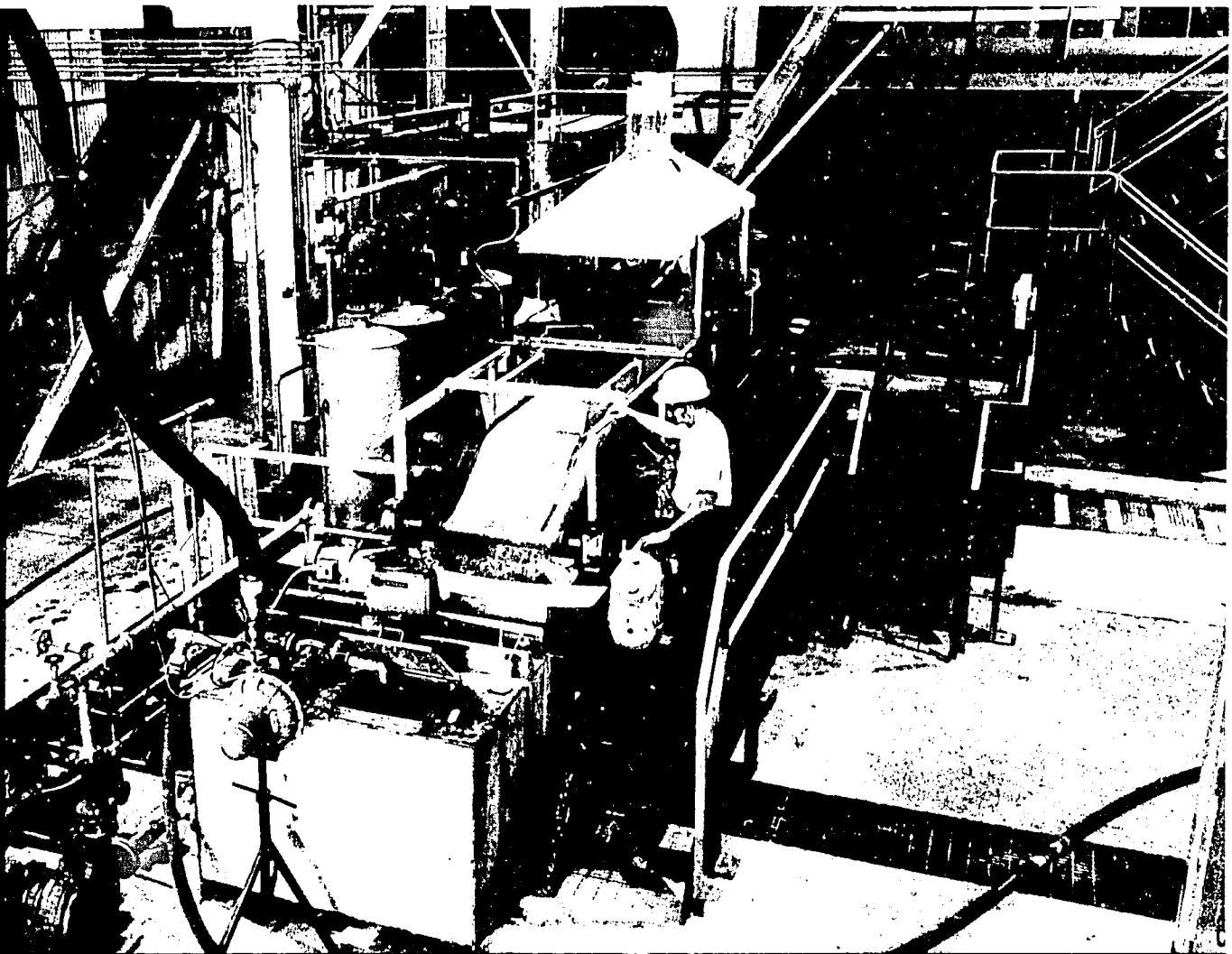

REFERENCES

1. Young, R. D., G. C. Hicks, and C. H. Davis. "TVA Process for Production of Granular Diammonium Phosphate, *Agricultural and Food Chemistry*, vol. 10 (November/ December 1962).
2. Hignett, Travis P. "History of World Fertilizers and Manufacturing Processes," *Indian Chemical Manufacturer IX*, No. 4, pp. 13-17.
3. Achorn, Frank P., and David G. Salladay. "TVA's New Pipe-Cross Reactor Process for Granular Ammonium Phosphates," Proceedings of ACS Meeting, San Francisco, California, 1976.
4. U.S. Department of Commerce, Bureau of the Census, "Inorganic Fertilizer Materials and Related Products," M28-B, Monthly Reports, June 1977.
5. Young, Ronald D., and Charles H. Davis. "Phosphate Ferilizers and Process Technology," Symposium, Soils Science Society of America, June 1976, pp. 31-34.
6. Young, Ronald D., and Earl H. Brown. "History of U.S. Facilities at Muscle Shoals, Alabama, and Origins of TVA," ACS, Southeast Regional Meeting, Gatlinburg, Tennessee, October 1976.
7. Andrews, W. B. "Direct Application of Anhydrous Ammonia and Aqua Ammonia," Second Interregional Symposium UNIDO, Kiev, U.S.S.R., October 1971, (Paper No. ID/WG99/t6).
8. McCamy, I. W., and M. M. Norton. "Have You Considered Pan Granulation of Urea?," *Farm Chemicals*, February 1977.
9. Yates, L. D., F. T. Nielsson, and G. C. Hicks. "TVA Continuous Ammoniator for Superphosphates and Fertilizer Mixtures," *Farm Chemicals*, July 1954.
10. Russel, Darrell A., and Gerald G. Williams. "History of Chemical Fertilizer Development," *Soil Science Society of America Journal*, vol. 41, No. 2 (March/ April 1977), pp. 260-265.
11. Achorn, Frank P., and Homer L. Kimbrough. "Latest Development in Materials and Equipment for Bulk Blending," TVA Fertilizer Conference, Cincinnati, Ohio, July 1976.
12. Hignett, T. P. "Bulk Blending of Fertilizers: Practices and Problems," *The Fertilizer Society Proceedings*, No. 87, London, March 1965.
13. Parker, J. Harold. "Bulk Blending in Perspective," *TVA Fertilizer Bulk Blending Conference*, Louisville, Kentucky, August 1973.
14. Achorn, Frank P., and Homer L. Kimbrough. "Uniform Application of Granular Fertilizers," TVA Fertilizer Conference, Louisville Kentucky, July 1975.
15. Achorn, Frank P., and Norman L. Hargett. "Fluid Fertilizer Systems," IFDC Fertilizer Distribution Seminar, August 1977.
16. Hignett, T. P. "Liquid Fertilizer Production and Distribution," Second Interregional Fertilizer Symposium, Kiev, U.S.S.R., October 1971, Paper No. ID/WG. 99/25, TVA Circular Z-27.
17. Meline, R.S., R. G. Lee, and W. C. Scott. "Use of a Pipe Reactor in Production of Liquid Fertilizer With Very High Polyphosphate Content," *Fertilizer Solutions*, 16:32-45, March/April 1972.
18. Achorn, F. P., and H. L. Kimbrough. "Latest Developments in Commercial use of the Pipe Reactor Process," *Fertilizer Solutions*, 18;8-9, 12, 14, 16, 20-21, July/August 1974.
19. Lee, Robert G., Robert S. Meline, and Ronald D. Young. "Pilot-Plant Studies of Anhydrous Melt Granulation Process for Ammonium Phosphate Based Fertilizers," *I & EC Process Design and Development*, vol. II (January 1972).
20. Davis, Charles H., and Ronald D. Young. "Use of Urea in Granulation Formulations for Compound Fertilizers," Fertilizer Industry Round Table, November 1973.
21. Young, Ronald D., and Robert G. Lee. "Advantages in Energy, Fuel and Investment Savings by Melt-Type Granulation Process," Technical Conference of International Superphosphate and Compound Manufacturers Association Limited and The Fertilizer Association of India, New Delhi, India, December 1975.
22. Achorn, Frank P., and David G. Salladay. "Pipe-Cross Reactor Eliminates the Dryer," *Farm Chemicals*, July 1976.
23. Achorn, Frank P., and Homer L. Kimbrough. "Suspension Fertilizers 1976," Fertilizer Industry Round Table, October 1976.
24. Achorn, Frank P., and Homer L. Kimbrough. "Dust Problems in Plants, Warehouses, and in the Field," Western Fertilizer and Pesticide Safety School, Fresno, California, September 1975.
25. Balay, Hubert L., and Frank P. Achorn. "Updated Uses and Handling of Wet-Process Superphosphoric Acid," *Fertilizer Solutions*, March/April 1971.
26. Achorn, Frank P., Eugene B. Wright, and Hubert L. Balay. "Corrosion Problems can be Alleviated with Right Materials," *Fertilizer Solutions*, May/June 1976.
27. Sargent, Allen, and George Hoffmeister. "Quality Control in Bulk-Blending Plants—Segregation in Holding Bins," TVA Fertilizer Conference, Louisville, Kentucky, July 1975.
28. Poulton, John W. "Some Approaches (in Selling and Servicing) in the United Kingdom," Proceedings, TVA Fertilizer Conference, Cincinnati, Ohio, 1976.
29. Achorn, Frank P., Hubert L. Balay, and David G. Salladay. "Fluorine Recovery from Superphosphate Plants," ACS, Chicago, Illinois, August 1975.
30. *Chemical Week*, June 1974, p. 31.
31. *Phosphorus and Potassium*, No. 88, March/April 1977, pp. 40-41.
32. Young, Ronald D. "Production of Compound Fertilizers from Intermediates in Local Plants," Second Interregional Symposium, UNIDO, Kiev, U.S.S.R., October 1971, Paper ID/WG 99/37, TVA Circular Z-30.
33. Davis, Charles H., and Glenn M. Blouin. "Energy Consumption in the U.S. Chemical Fertilizer System from Ground to Ground." In *Agriculture and Energy*, Academic Press, Inc., 1977.
34. Shields, John T. "A Case Study of the Feasibility of Shipping Bulk Urea Fertilizer Under Tropical Conditions," TVA Bulletin Y-19, February 1971.
35. Achorn, Frank P., and J. S. Lewis, Jr. "Some Processes for the Production of Granular Fertilizers," Seminar of ANDA, Sao Paulo, Brazil, May 1970.
36. Achorn, Frank P., and Hubert L. Balay, "Phosphoric Acid: Shipment, Storage, and Use in Fertilizers," *Fertilizer Solutions*, September/October 1973.
37. Scott, W. C., G. G. Patterson, and C. A. Hodge. "Status of Modern Wet-Process Phosphoric Acid Technology," *Fertilizer Solutions*, March/April 1974.
38. Shirley, A. R., Jr., and R. S. Meline. "The Production of Sulfur-Coated Urea in TVA's One-Ton-Per-Hour Pilot Plant," In *New Uses of Sulfur*, Advances in Chemistry Series, No. 140, Washington, D.C.: ACS, 1975.
39. Young, Ronald D. *TVA's Development of Sulfur-Coated Urea*, August 1974, TVA Bulletin Y-79.
40. "New Developments in Fertilizer Technology." Eleventh Demonstration, October 1976, TVA Bulletin Y-107, pp. 65-70.
41. Achorn, Frank P., and Harold G. Walkup. "Cost Comparison of Ocean Shipment of Anhydrous Ammonia and Solid Ure$ Versus Shipment of Urea Ammonia Solution," Report for USAID, 1966.
42. Hargett, N. L., and L. G. Sills. "Fertilizer Distribution Centers in the U.S.," Presented at the Fertilizer Industry Round Table, Washington, D.C., October 25-27, 1977.